US008814221B2

(12) **United States Patent**
Grant

(10) **Patent No.: US 8,814,221 B2**
(45) **Date of Patent: Aug. 26, 2014**

(54) **FACILITATING ACCESS OF POLE-MOUNTED ITEMS**

(75) Inventor: **Andrew J Grant**, Houston, TX (US)

(73) Assignee: **Swivelpole Patent Pty Ltd.**, Mandurah (AU)

(*) Notice: Subject to any disclaimer, the term of this patent is extended or adjusted under 35 U.S.C. 154(b) by 42 days.

(21) Appl. No.: **13/491,773**

(22) Filed: **Jun. 8, 2012**

(65) **Prior Publication Data**

US 2013/0328302 A1 Dec. 12, 2013

(51) **Int. Cl.**

F16L 27/00	(2006.01)
H02G 11/00	(2006.01)
H02G 1/00	(2006.01)

(52) **U.S. Cl.**

CPC . ***H02G 11/00*** (2013.01); ***H02G 1/00*** (2013.01)
USPC **285/184**; 265/278; 265/282; 265/153.1

(58) **Field of Classification Search**

USPC 285/184, 185, 273, 278, 280, 281, 282; 403/84, 87, 91, 92, 93, 98; 239/587.5, 239/587.6

See application file for complete search history.

(56) **References Cited**

U.S. PATENT DOCUMENTS

442,809	A	*	12/1890	Hunter	285/282
783,987	A	*	2/1905	Walsh	285/184
960,899	A	*	6/1910	Guyer	285/184
1,020,839	A	*	3/1912	Niesen	285/184
1,233,170	A		7/1917	Berry	
1,526,336	A	*	2/1925	Hart	285/405
1,601,014	A		9/1926	Wismer et al.	
1,605,507	A	*	11/1926	Burke	285/184
1,822,260	A	*	9/1931	Adams	403/87
1,880,098	A	*	9/1932	Mair	285/184
2,212,747	A	*	8/1940	O'Leary	285/184
2,250,448	A		7/1941	Edwards	
2,342,120	A	*	2/1944	Cartwright	239/587.5
2,447,947	A	*	8/1948	Larson et al.	285/184
2,479,580	A		8/1949	Marco	
2,577,811	A		12/1951	Rutledge	
2,632,660	A		3/1953	Krauthamer	
2,729,473	A	*	1/1956	Warshawsky	285/282
2,910,310	A		10/1959	Mulac	
3,355,847	A		12/1967	Pratt	

(Continued)

FOREIGN PATENT DOCUMENTS

DE	2918532 A1	11/1980
DE	4210625 C1	10/1993
FR	2217625 B3	9/1974
GB	410600	5/1934

Primary Examiner — David E Bochna

(74) *Attorney, Agent, or Firm* — Baker Botts L.L.P.

(57) **ABSTRACT**

Apparatus for use in a pivoting pole assembly including a first component comprising an outside face adapted for connection with a support element, and a first inside face, and defining a first central wiring passage; and a second component defining a second central wiring passage, and comprising an outside face adapted for connection with the base end of the elongate object and an inside face rotationally coupled to the first inside face. The first central passage and the second central passage are fluidly connected and share a common axis of rotation, and the first component rotates with respect to the second component about a common axis of rotation. The apparatus also includes an annular locking mechanism including arcuate channels a radial distance from the axis; and protrusions extending into the channels such that upon respective rotation of components the protrusions travel along the channels.

19 Claims, 14 Drawing Sheets

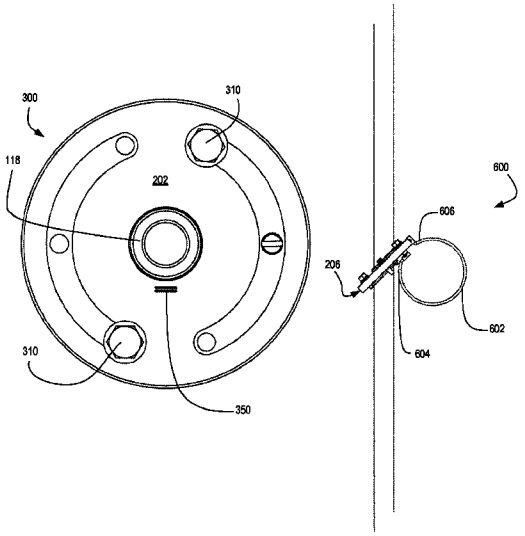

(56) **References Cited**

U.S. PATENT DOCUMENTS

3,737,179	A		6/1973	White
3,778,610	A		12/1973	Wolf
4,020,606	A		5/1977	Pratt
4,090,210	A		5/1978	Wehling et al.
4,592,177	A		6/1986	Pratt
4,991,622	A		2/1991	Brewer et al.
5,275,444	A		1/1994	Wythoff
5,333,436	A		8/1994	Noble
5,398,978	A	*	3/1995	Gagnon 285/184
5,624,198	A		4/1997	Fuchs
5,687,537	A		11/1997	Noble
5,772,172	A		6/1998	Sampedro et al.
5,794,387	A		8/1998	Crookham
5,813,706	A	*	9/1998	Travis 285/184
6,045,239	A		4/2000	Waldmann
6,050,614	A		4/2000	Kirkpatrick
6,070,996	A		6/2000	McCollum
6,957,832	B1		10/2005	Pannekoek
7,690,822	B2		4/2010	Kauffman

* cited by examiner

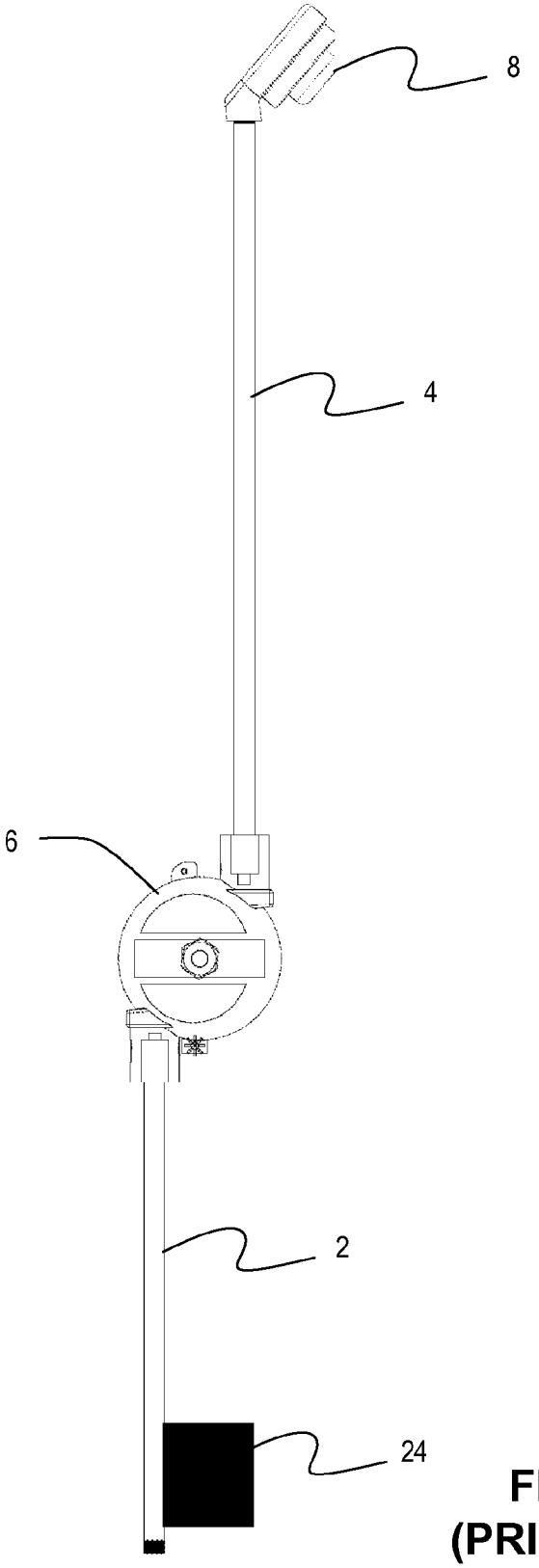

FIG. 1A
(PRIOR ART)

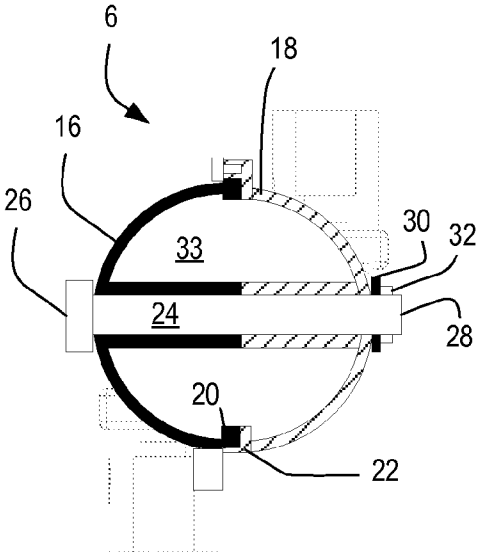

FIG. 1B
(PRIOR ART)

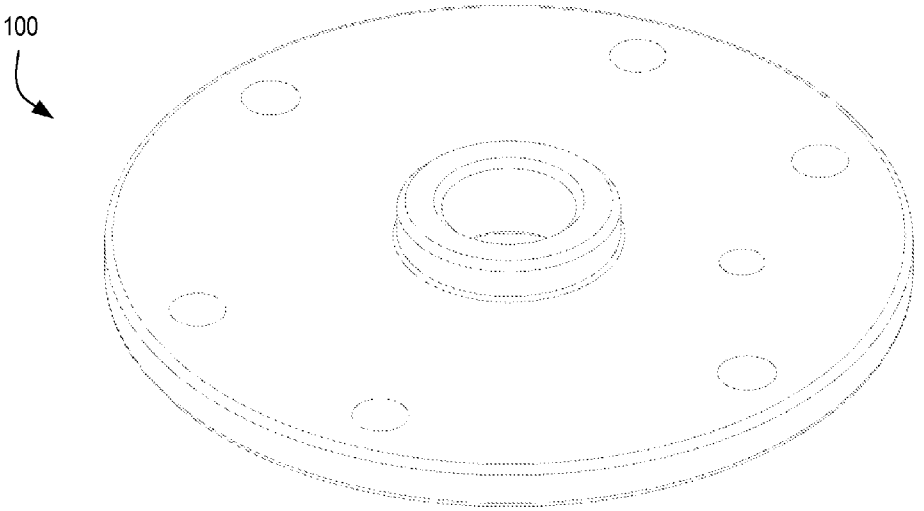

FIG. 2A

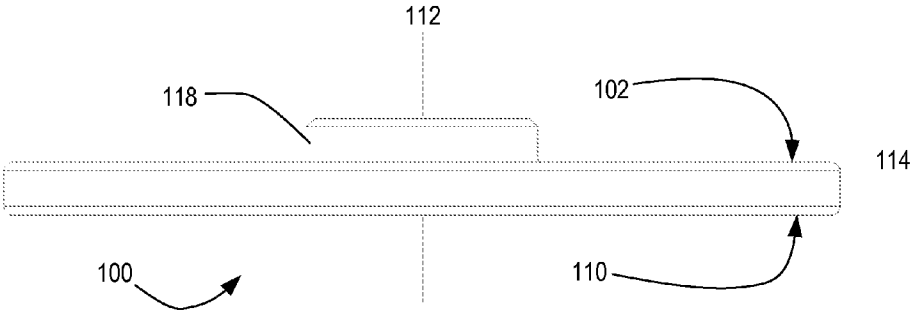

FIG. 2B

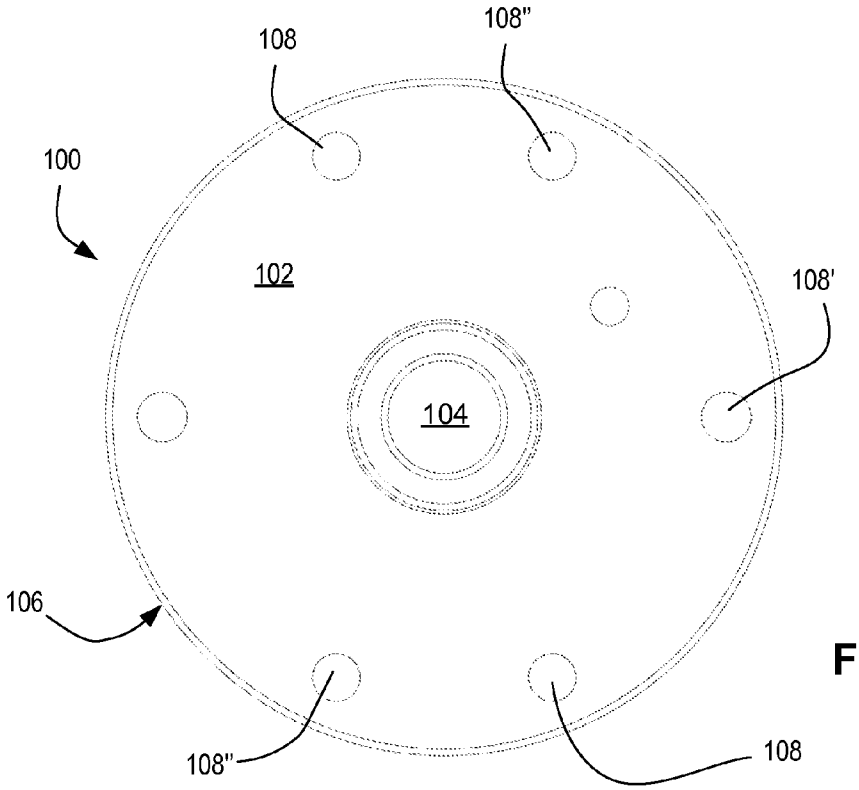

FIG. 2C

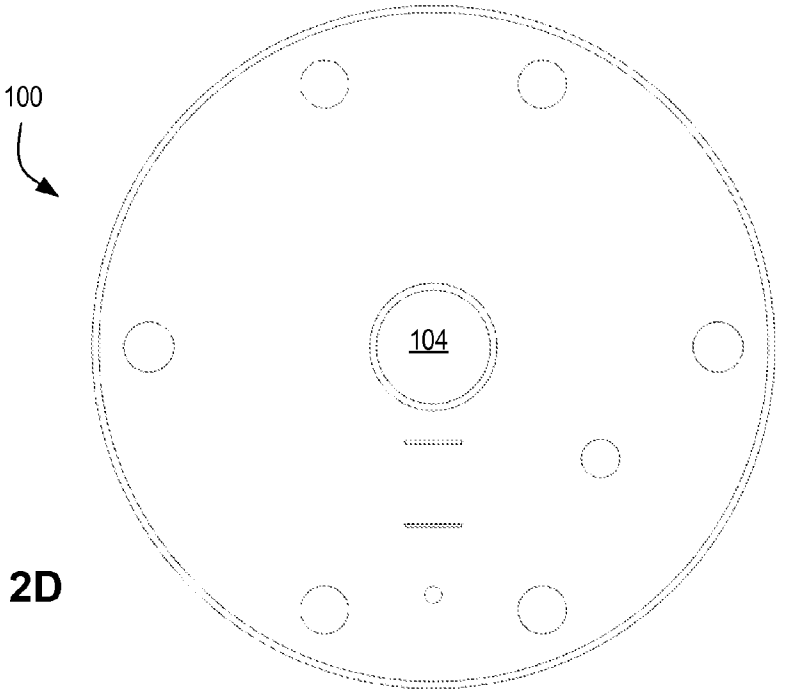

FIG. 2D

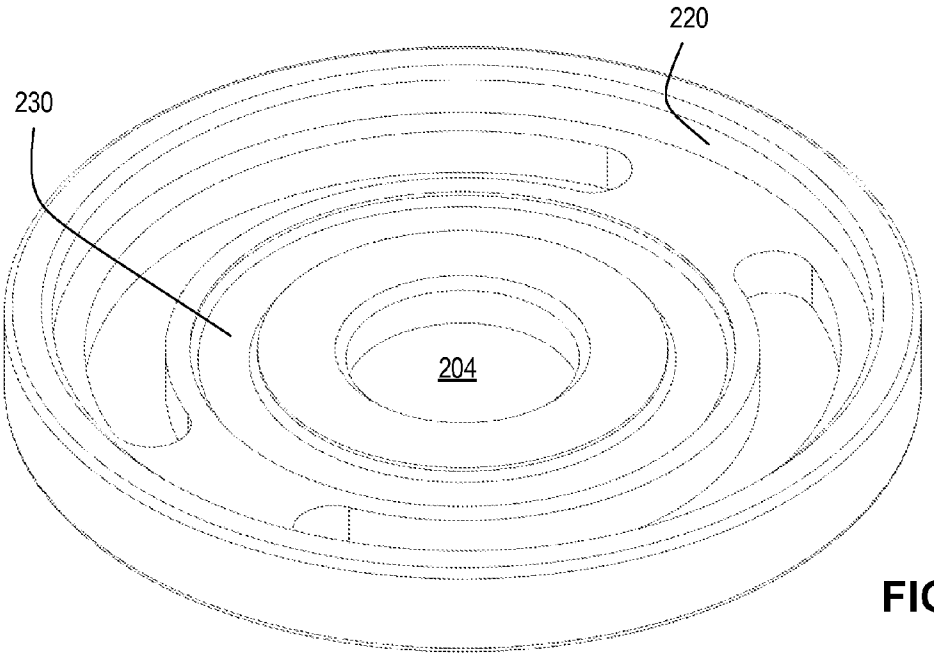

FIG. 2E

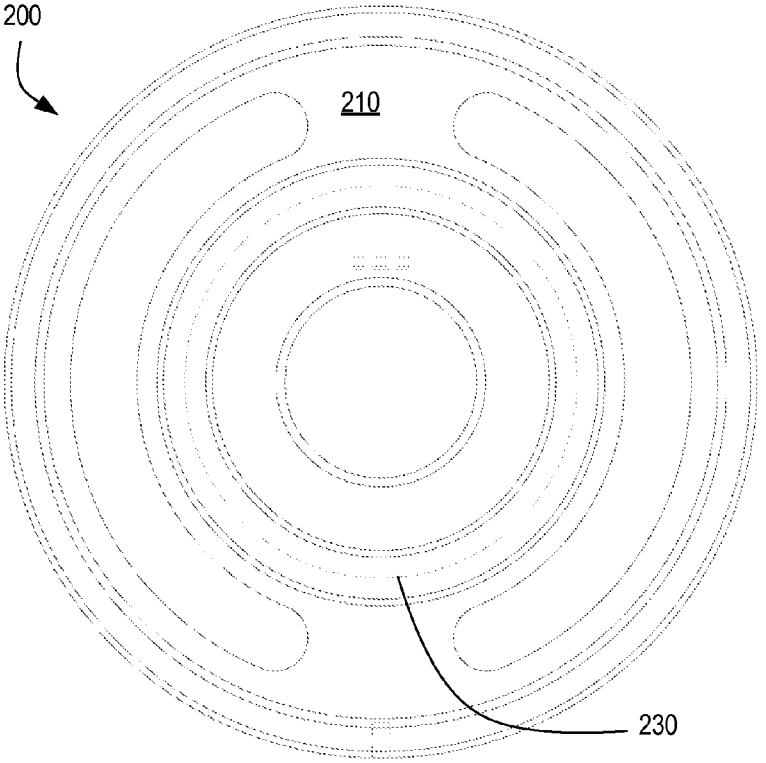

FIG. 2G

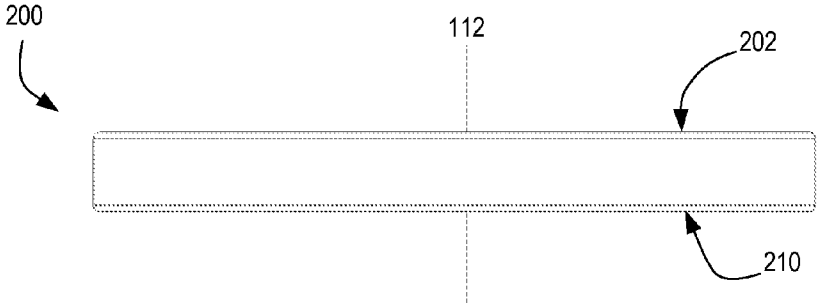

FIG. 2F

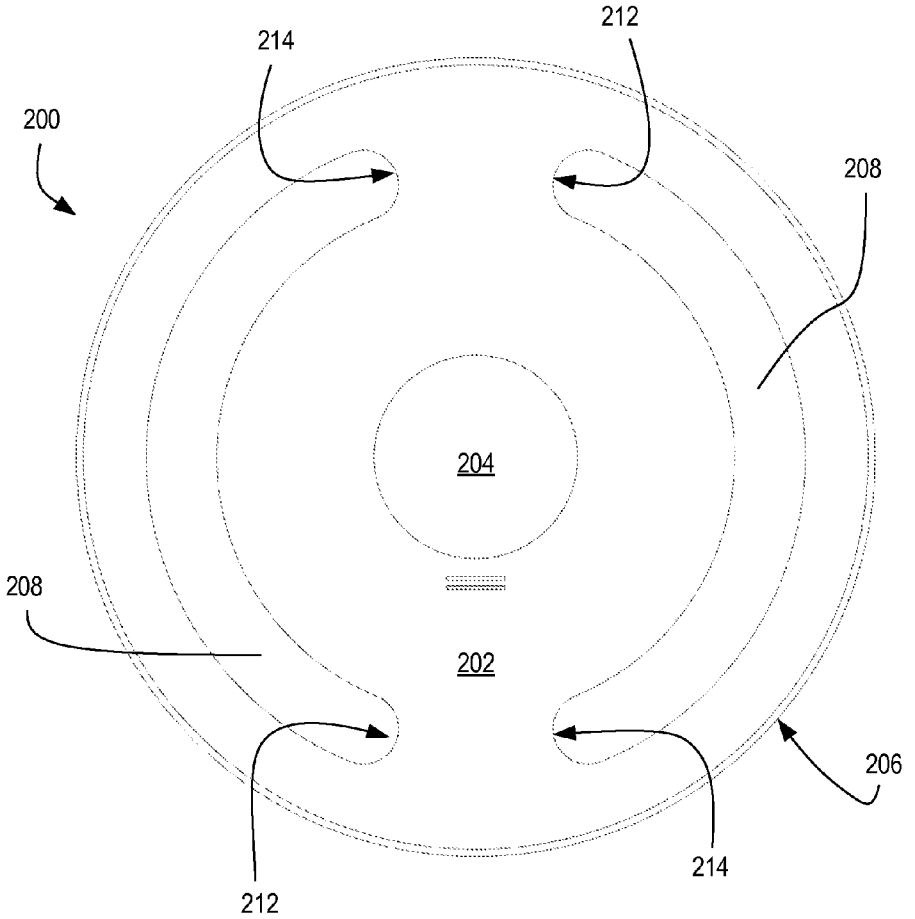

FIG. 2H

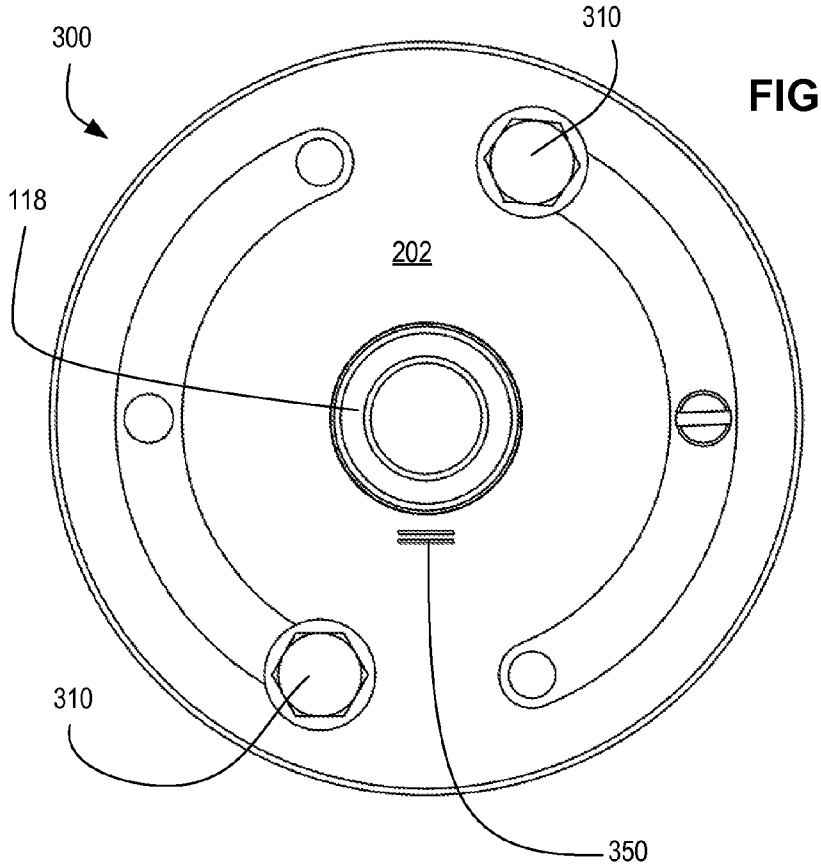

FIG. 3A

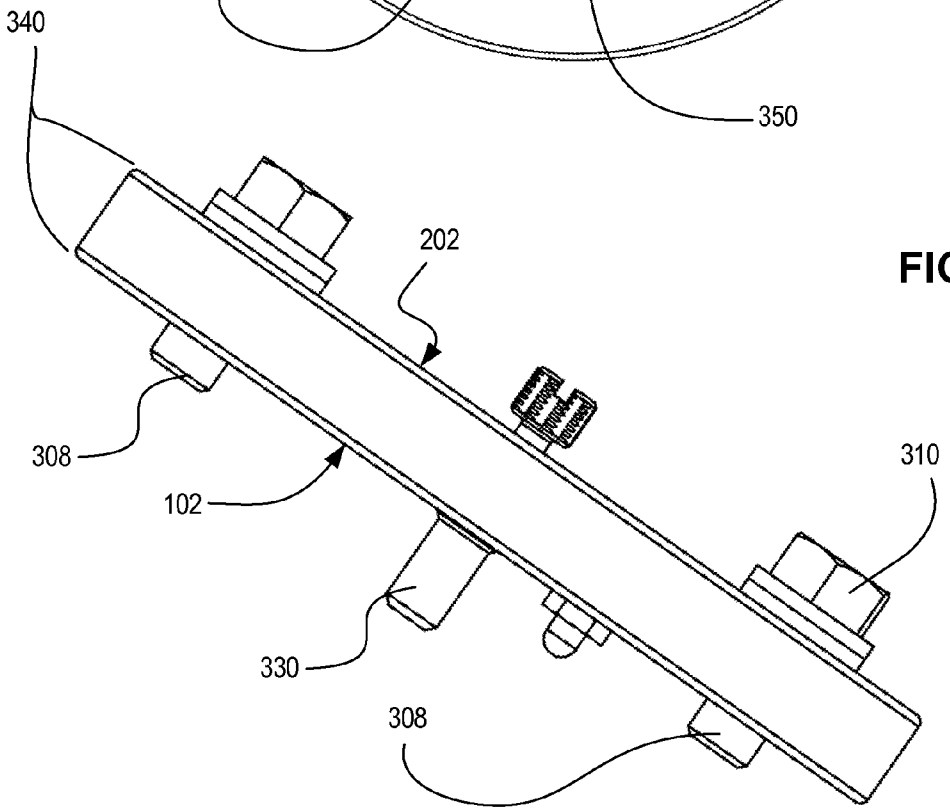

FIG. 3C

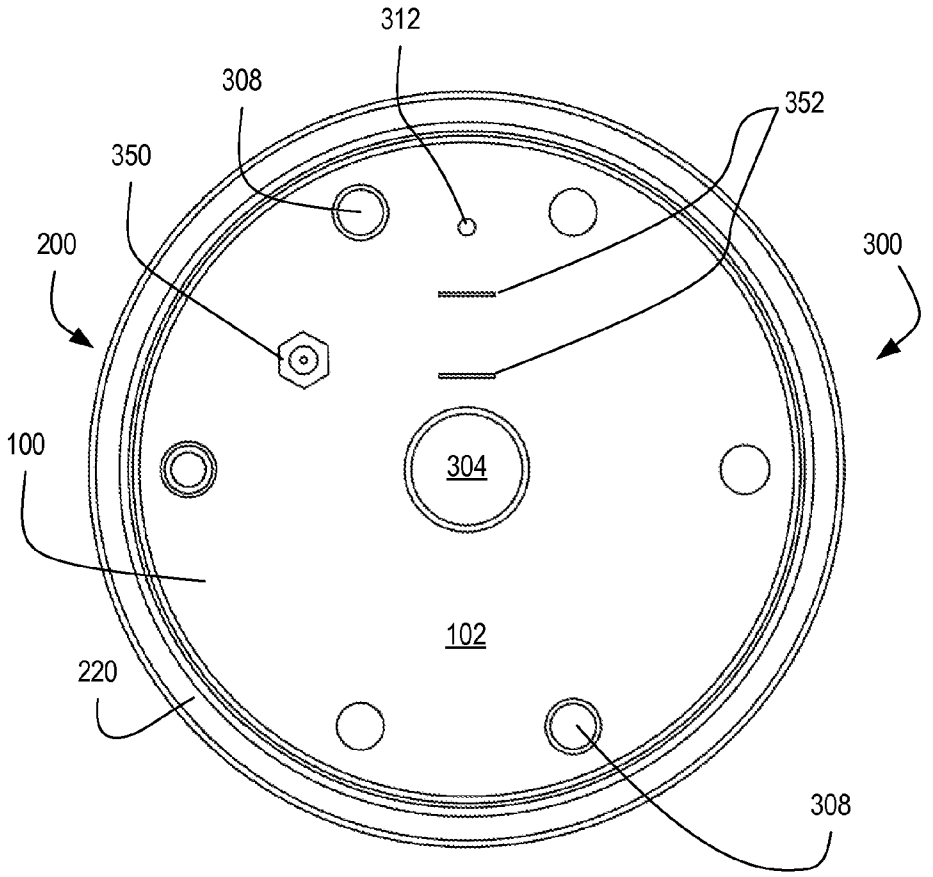

FIG. 3B

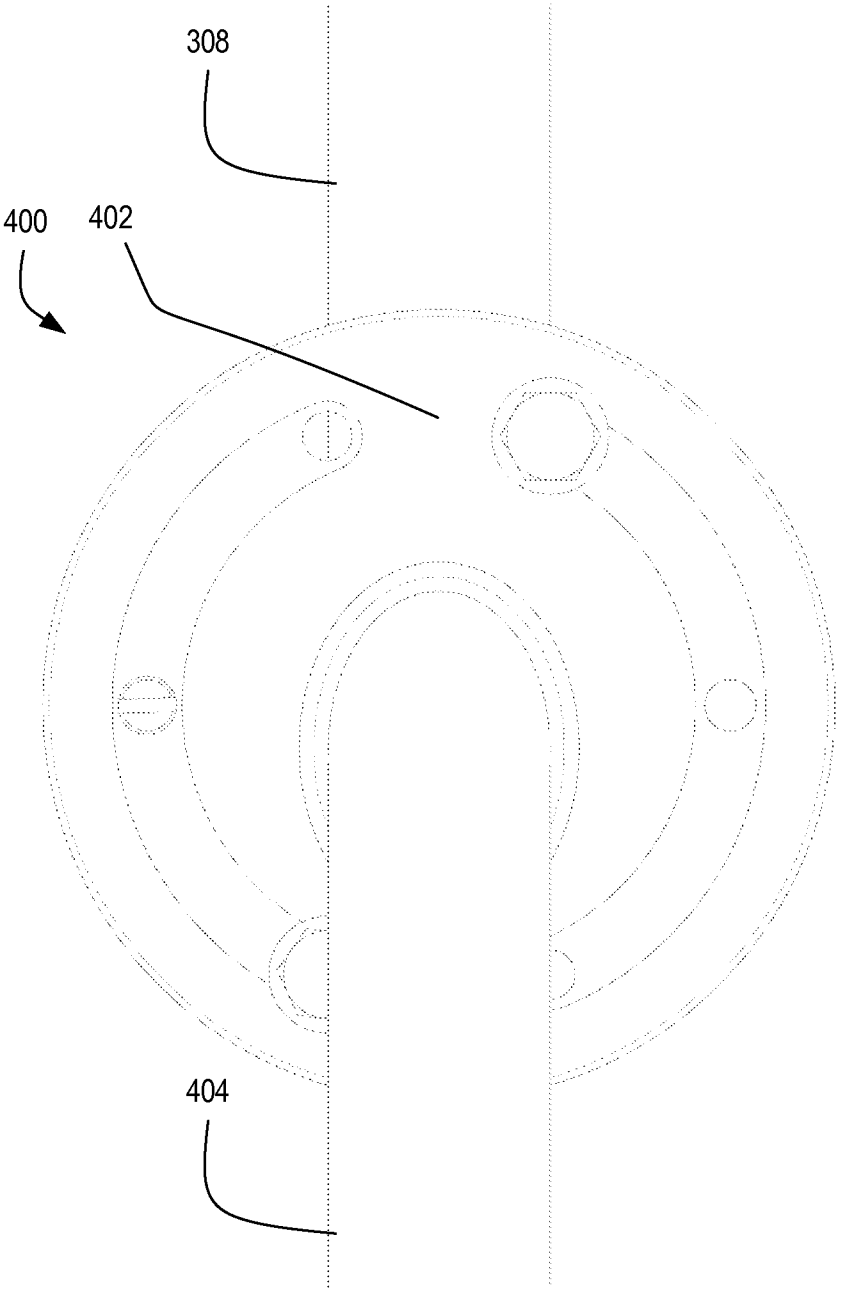

FIG. 4A

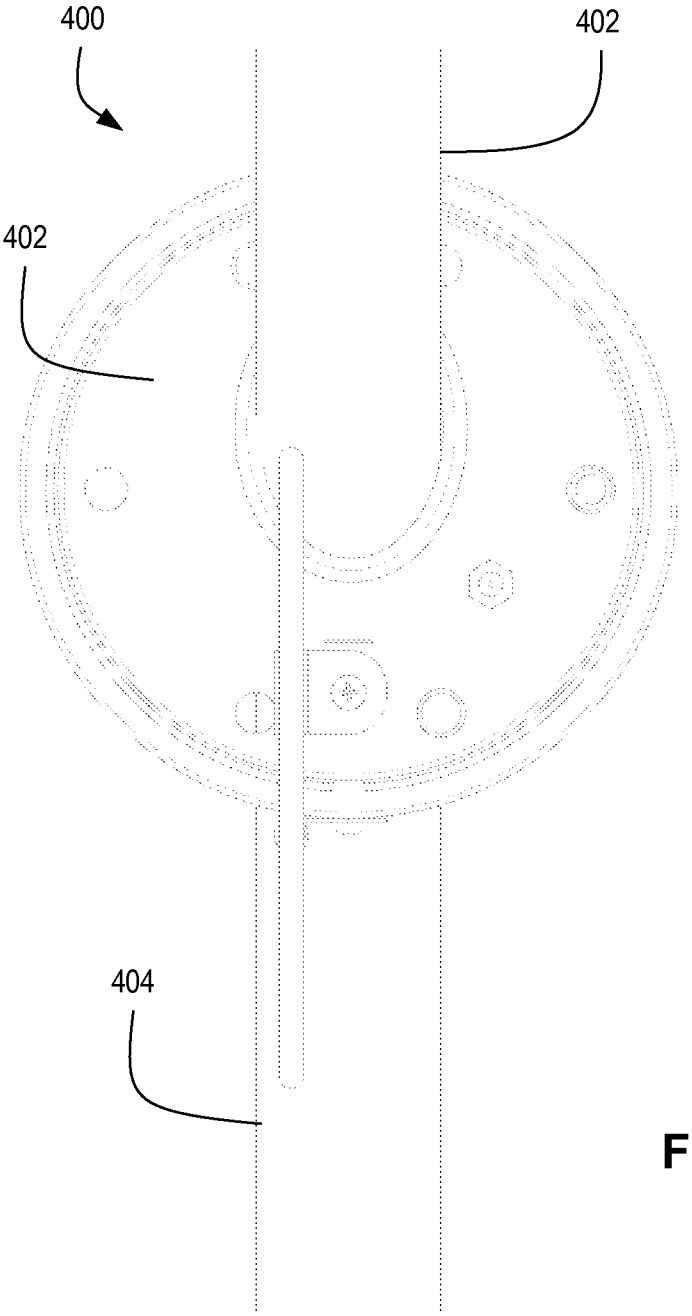

FIG. 4B

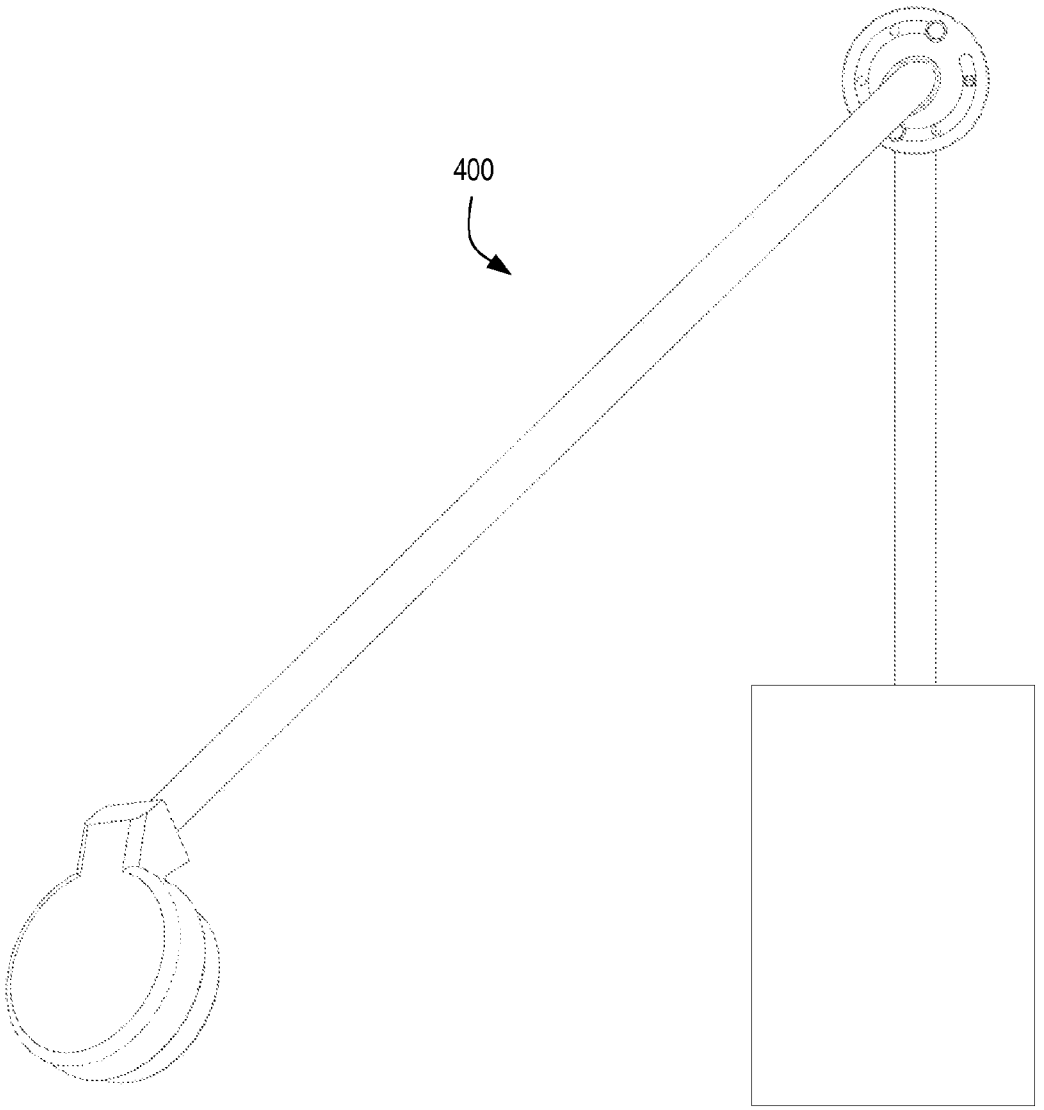

FIG. 4C

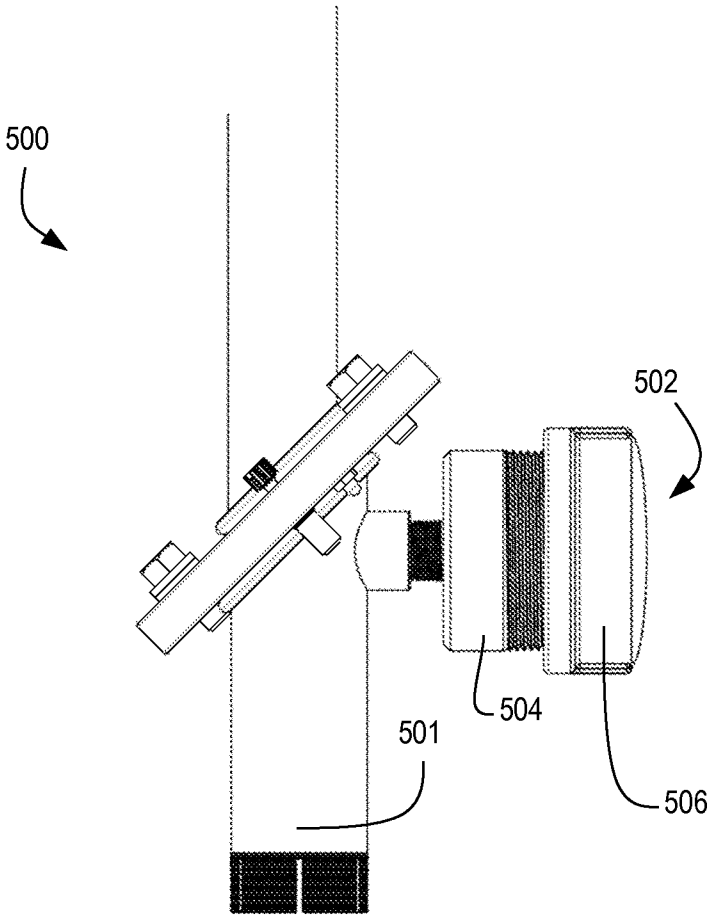

FIG. 5A

FIG. 5B

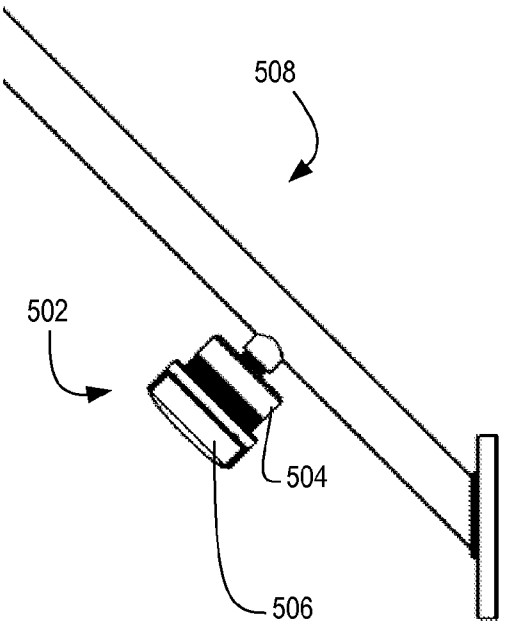

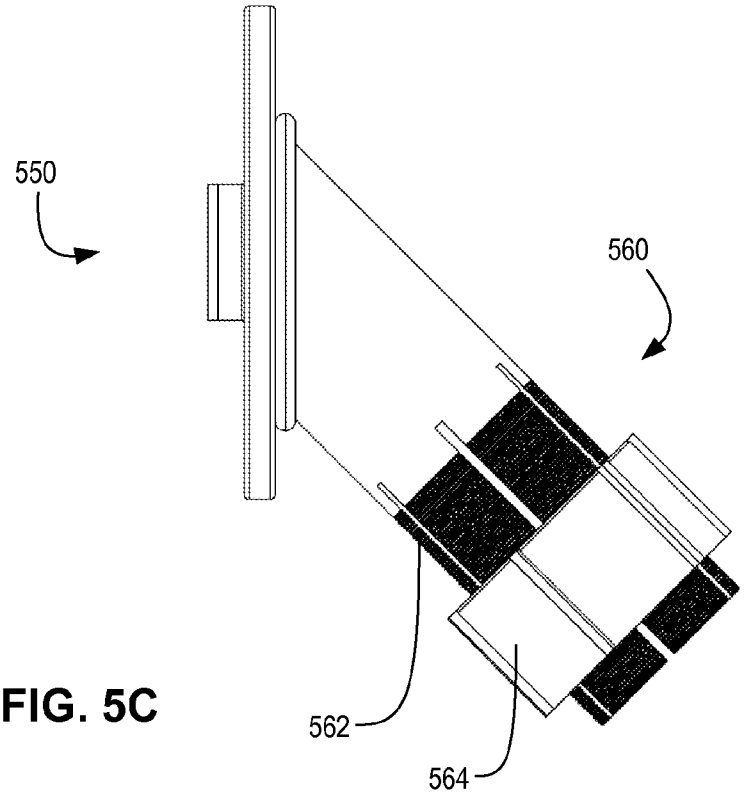

FIG. 5C

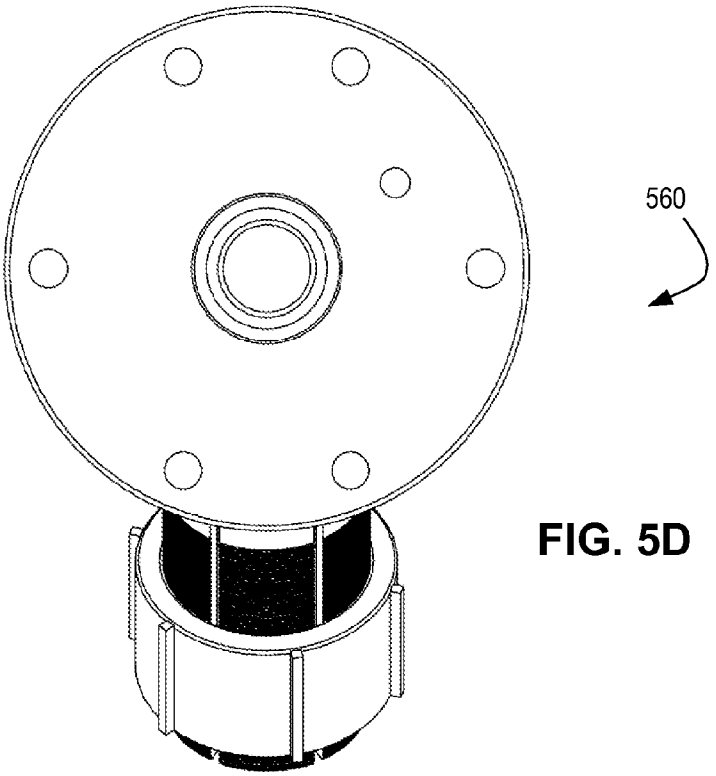

FIG. 5D

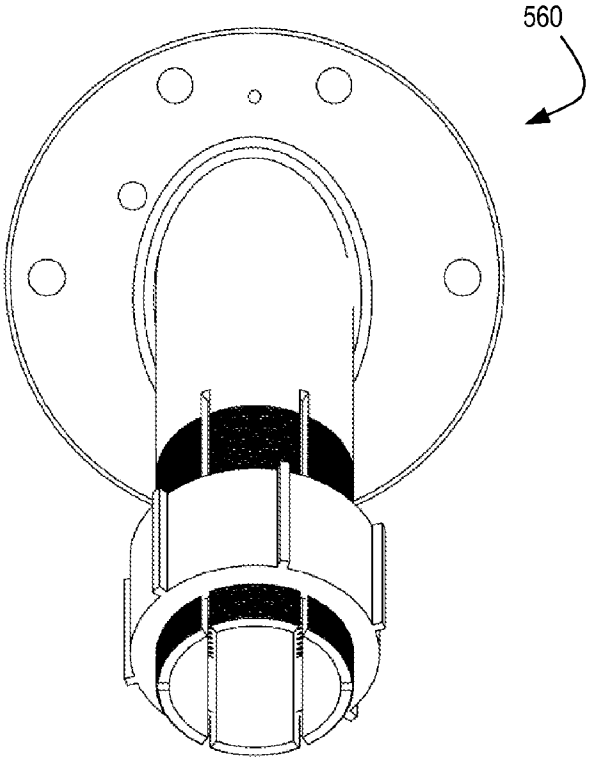

FIG. 5E

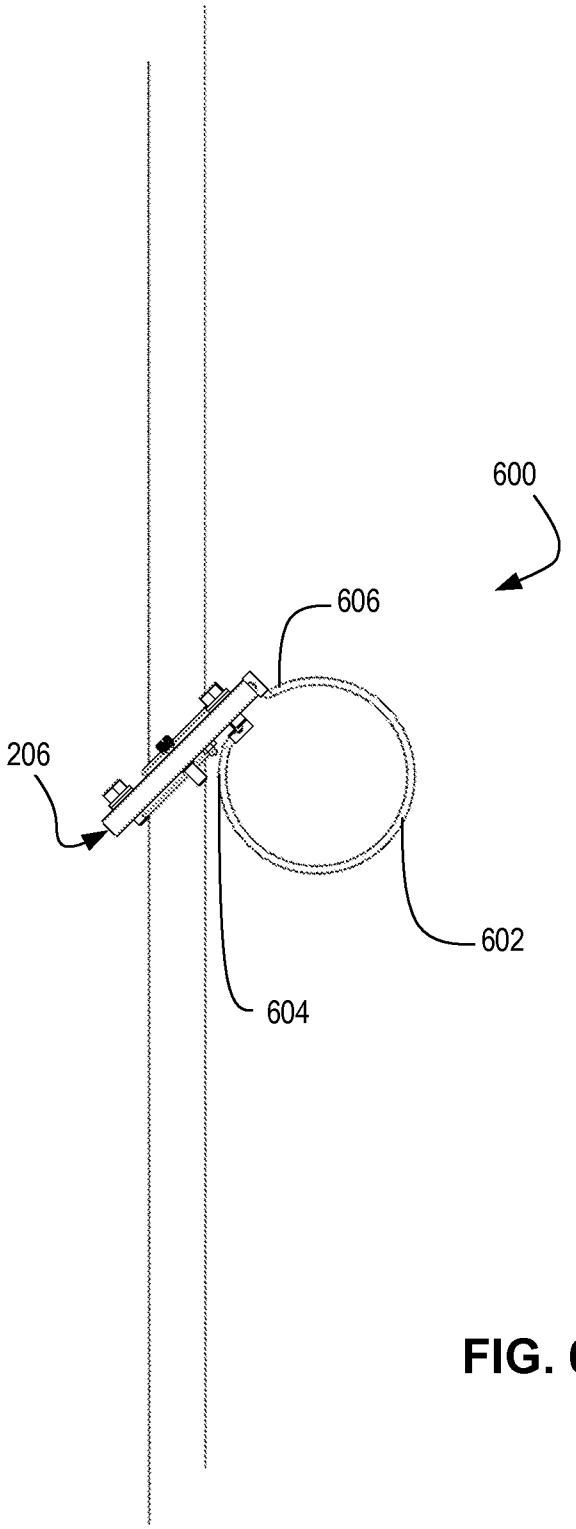

FIG. 6

FACILITATING ACCESS OF POLE-MOUNTED ITEMS

BACKGROUND

Elongate objects such as poles, masts, shafts, posts, pillars, and towers have long been used to promote general illumination by attaching lighting to the object at an elevated position some distance from the supported end of the object (i.e., the base end) toward the remote end of the object. In some instances, the distance may be eight to ten feet or more. The preference for using lights elevated in this manner in industrial applications is well known. Benefits may include keeping the lighting out of the way of general traffic, providing for a wide dispersal of illumination while avoiding glare, avoiding damage to the lighting, and so on. Similarly mounting other items such as security cameras, sensors, loudspeakers, antennas, flags, and the like to an elongate object is also widely known.

Typically, access to these items is regularly required for repair, maintenance, configuration, and so on. Accessing items mounted as above has proven problematic, especially in industrial settings, such as chemical processing facilities, manufacturing plants, refineries, mining operations, and the like. Use of a ladder to access these items is generally unsafe in industrial environments. In many cases, the item is elevated from a suspended walkway, which is itself elevated from surrounding areas, thus exacerbating the perils of balancing on a ladder. In addition, the surrounding areas may also contain further obstacles.

As a result of the perils of ladder use in industrial settings, systems and methods have been developed to lower the remote end of an elongate object opposite the base (e.g., the top end of a light pole). Recently, lowering the remote end has been accomplished by rotating an upper section of the object downward through the use of a rotational joint, or pivot joint, incorporated between the end of the object connected to the base and the remote end, or between two elongate objects. The system including the pivot joint and the coupled upper and lower sections of the elongate object may be called a pivoting pole assembly. Some known systems also have a passage interior to the elongate object extending from the base end, through the joint, to the remote end, and wiring (wires, cables, etc.) running through the passage to the mounted item to provide power, communications, and so on.

SUMMARY

The combination of an elongate object, an item mounted to the object, and wiring may be referred to as a wired pole assembly. Prior art pivot joints are adapted to connect a base end of an elongate object of a wired pole assembly to a support and facilitate access to items mounted remote from the base end, while allowing passage of wiring therethrough.

Generally, aspects of the present invention provide for accurately, reliably, easily, safely and/or rapidly raising and lowering elongate objects as part of a pivoting pole assembly; and allow the assembly to be precisely toggled between one or more operational orientations and access orientations.

A first general embodiment is an apparatus for use in a pivoting pole assembly, including a wired pole assembly. The apparatus may allow for manipulating an object to facilitate access to a mounted item. The apparatus may be or incorporate a pivot joint. The apparatus comprises a first component comprising a first outside face, the first outside face adapted for connection with at least one of a support element and the base end of the elongate object, and a first inside face, and

defining a first central wiring passage; and a second component defining a second central wiring passage, and comprising a second outside face, the second outside face adapted for connection with at least the other of a support element and the base end of the elongate object, and a second inside face rotationally coupled to the first inside face such that: the first central passage and the second central passage are fluidly connected and share a common axis of rotation; and the first component rotates with respect to the second component about the common axis of rotation. Either or both central wiring passages may be substantially toroid. The apparatus also includes an annular locking mechanism comprising one or more arcuate channels, defined by the second component, the channels located a radial distance from the common axis of rotation and extending from the respective inside face to the respective outside face of the second component, each channel comprising a first channel end and a second channel end; and one or more protrusions extending from the first component and extending into the one or more channels such that upon rotation of the second component with respect to the first component, the protrusions and the channels rotate with respect to one another such that the location of each of the protrusions travels along the channel, and a range of relative rotation of the second component with respect to the first component is defined by the length of the channels.

The apparatus may further be configured such that, upon connection of a base end of an elongate object and a support element, respectively, to opposing faces chosen from the first outside face and the second outside face: the elongate object is pivotable through a range of motion corresponding to the arcuate channels such that the remote end of the elongate object may be raised or lowered through rotation of the first component; and rotation of the first component and the second component with respect to one another comprises a range of possible rotation defined by the one or more first channel ends and the one or more second channel ends.

In some embodiments, the apparatus may be configured for an elongate object of a particular length attached to at least one of the first outside face and the second outside face of the apparatus at a particular angle such that upon the installation of the pivoting pole assembly with the base end of the elongate object and the support element being connected to the respective opposing faces, and the item being mounted at a particular location on the elongate object: upon at least one protrusion abutting at least one first channel end, the elongate object is aligned in an optimal operational orientation; and upon at least one protrusion abutting at least one second channel end, the elongate object is aligned in an optimal target orientation providing access to an item mounted on the elongate object at an optimum access elevation.

The first component and/or the second component may substantially comprise a toroid. The first component and the second component may comprise interlocking flange plates. The locking mechanism may hold the first component immobile with respect to the second component. One or more of the protrusions may be implemented as a bolt threadedly engaged with the first component. The bolt may be threadedly tightenable into the first component to bias the first component and the second component together.

Either of the outside faces may include a perimeter and an annular mating surface between the central wiring passage and the perimeter. The mating surface may be adapted for connection with a rim of a tubular object, such as, for example, by welding. Alternatively, the mating surface may include a tubular adaptor in fluid connection with the first central wiring passage, the tubular adapter configured to receive an elongate object.

The apparatus may include a hub extending through the plane of rotation from the inside face of at least one of the first component and the second component and substantially to the plane defined by the outside face of the other of the first component and the second component.

The apparatus may include a collar extending through the plane of rotation from the inside face of at least one of the first component and the second component and substantially to the plane defined by the outside face of the other of the first component and the second component, and encircling the perimeter of the other of the first component and the second component.

One general embodiment includes an apparatus adapted to connect a base end of an elongate object to a support and facilitate access to articles mounted remote from the base end. In some instances, the support may be a lower section of the elongate object. In some embodiments, the apparatus is pivot joint. Other general embodiments include a rotational pole assembly (e.g., pivoting pole assembly) comprising an upper object section and lower object section functionally connected by a pivot joint as described above. Structurally, the rotational pole assembly may include an upper pole assembly rotationally coupled to a lower pole assembly.

One general embodiment includes an apparatus for use in a pivoting pole assembly including a first component comprising a first outside face, the first outside face adapted for connection with at least one of a support element and the base end of the elongate object, and a first inside face, and defining a first central wiring passage; and a second component defining a second central wiring passage, and comprising a second outside face, the second outside face adapted for connection with at least the other of a support element and the base end of the elongate object, and a second inside face rotationally coupled to the first inside face such that the first central passage and the second central passage are fluidly connected and share a common axis of rotation. The first component may rotate with respect to the second component about the common axis of rotation.

At least one of the first outside face and the second outside face may comprise a perimeter and a tubular mating surface radially located between the perimeter and the outermost of the first central wiring passage and the second central wiring passage. The tubular mating surface may comprise a tubular adaptor in fluid connection with at least one of the first central wiring passage and the second central wiring passage. The tubular adapter may be configured to receive an elongate object. The apparatus may further include a junction box module in fluid connection with the tubular adaptor.

The foregoing and other objects, features and advantages of the disclosure will be apparent from the following more particular descriptions of exemplary embodiments of the invention as illustrated in the accompanying drawings wherein like reference numbers generally represent like parts of exemplary embodiments of the invention.

BRIEF DESCRIPTION OF THE DRAWINGS

The following figures are part of the present specification, included to demonstrate certain aspects of embodiments of the present disclosure and referenced in the detailed description herein. Unless otherwise noted, figures are not drawn to scale.

FIGS. **1**A and **1**B illustrate perspective views of a particular prior art rotational pole and pivot joint.

FIGS. **2**A-**2**H illustrate components of an example pivot joint in accordance with embodiments of the invention.

FIGS. **3**A-**3**C illustrate an example assembled pivot joint in accordance with embodiments of the invention.

FIGS. **4**A-**4**C illustrate an example pivoting pole assembly in accordance with embodiments of the invention.

FIG. **5**A illustrates a pivoting pole assembly incorporating a junction box module.

FIG. **5**B illustrates an upper pole assembly incorporating a junction box module.

FIGS. **5**C-**5**E illustrate a conversion pivot joint component according to embodiments of the invention.

FIG. **6** illustrates a pivoting pole assembly incorporating a grounding strap **602** according to embodiments of the invention.

DETAILED DESCRIPTION

The principles of the invention are explained by describing in detail, specific example embodiments of devices, systems, and methods for facilitating access to an item mounted on an elongate object (such as, for example, a pole, mast, shaft, post, pillar, tower, or the like). The item could be, for example, a light fixture, remote camera, loudspeaker, or any other item. In some aspects, facilitating access is carried out by manipulating pivoting pole assemblies between one or more operational orientations and one or more access orientations.

General embodiments of the invention include pivoting pole assemblies and devices for incorporation within a pivoting pole assembly. Generally, embodiments of the invention may include pivot joints, connection apparatus, pivoting pole assemblies, pivoting pole sub-assemblies, and methods for their operation or construction. Connection apparatus may be adapted to connect a base end of an elongate object of a pivoting pole assembly to a support (e.g., a second elongate object, railing, a mounting fixture, a stanchion, etc.) and facilitate access to items mounted remote from the base end. More specific example embodiments are described below.

The pivoting pole assembly may be a wired pole assembly. A wired pole assembly may include wiring or cabling operatively coupled with the mounted item. The elongate object in a wired pole assembly may include an internal passage for running wiring or cabling to the mounted item. In some embodiments, an apparatus may connect the wired pole assembly to a support.

Pivoting pole assemblies are known in the art. FIGS. **1**A and **1**B illustrate perspective views of a particular prior art rotational pole and pivot joint, respectively. Referring to FIG. **1**A, the prior art rotational pole includes a lower conduit **2**, an upper conduit **4**, a pivot joint **6**, a light fixture **8**, and a junction box **10**. The pole may be mounted to a rail or attached to a base (not shown). Electrical wiring (not shown) runs within conduits **2**, **4** from the base end of the pole **12** through pivot joint **6** to the remote end **14** and is connected to light fixture **8**. Upper conduit **4** is pivoted down for maintenance.

Referring to FIG. **1**B, the prior art pivot joint **6** includes a lower cup **16** and an upper cup **18**. Together, the lower cup **16** and upper cup **18** define a substantially spherical wiring chamber. The circular edges of the cups end in flanges **20**, **22** that meet in sliding rotational contact defining a swivel plane. The flanges **20**, **22** may include a lip so that one cup is partially nested in the other. The cups **16**, **18** are held together by a central locking bolt **24**, which passes approximately through the diameter of the spherical wiring chamber **33** formed by the cups. The bolt **24** includes a head **26** retained in a recess of the lower cup **16** and a threaded end **28** (opposite the head) protruding through the upper cup **18**, and held in place by a washer **30** and a nut **32** providing a compressive force against the outside of upper cup **18**. Pivot joint **6** may

also include a rubber stop block, mechanical stops and/or an indexing pin (not shown). Stop block and the mechanical stop can be radially spaced ninety degrees (90°), one hundred eighty degrees (180°), or any other desired angle, with respect to each other. Moreover, removable stops can be provided to lock the lower and upper cups **14**, **16** in a vertical orientation. When the removable stops are removed, as the upper cup is rotated about the locking bolt with respect to the lower cup, the stop block makes contact with the mechanical stop at the desired angle and will prevent further rotation. An indexing pin can be inserted through aligned holes formed in the lower and upper cup flanges to temporarily lock the cups with respect to each other.

General embodiments of the present invention include pivoting pole assemblies and apparatus for use in a pivoting pole assembly. The apparatus may include a pivot joint, either exclusively or in combination with other components. Pivot joints of the present disclosure are advantageous over prior art pivot joints in ways that will become apparent from more particular descriptions of exemplary embodiments of the invention to follow.

In some embodiments of the disclosure, a pivot joint may allow for manipulation of an installed elongate object having an item mounted at a remote end. Manipulation may be carried out (i) to place the object in an orientation for improved or optimal access to the remote end or to the item mounted thereto; or (ii) to place the object in its optimal operational orientation.

Some aspects of the present invention may allow toggling between optimal orientations more easily, safely and/or rapidly; and may allow the assembly to be precisely toggled between one or more operational orientations and access orientations.

Example embodiments were chosen and described in order to best explain the principles of the invention and their practical application, and to enable others of ordinary skill in the art to understand the invention for various embodiments with various modifications as are suited to the particular use contemplated. Those skilled in the art will understand, however, that the invention may be embodied as many other devices, systems, and methods. For example, various aspects of the methods and devices may be combined in various ways or with various products, including existing products. Many modifications and variations will be apparent to those of ordinary skill in the art. The scope of the invention is not intended to be limited by the details of example embodiments described herein. The scope of the invention should be determined through study of the appended claims.

Specific design details have been provided for illustration, but should not be considered limiting. Readers of skill in the art will recognize that many variations of pivot joints and pivoting pole assemblies may be implemented consistent with the scope of the invention as described by the appended claims.

Some embodiments of the present disclosure may include a pivot joint constructed from a plurality of components. The pivot joint may comprise a first component and a second component rotationally coupled to one another so that the second component rotates with respect to the first component about a common axis of rotation.

FIGS. **2**A-**2**H illustrate components of an example pivot joint in accordance with embodiments of the invention. FIG. **2**A illustrates a perspective view of a first pivot joint component in accordance with embodiments of the invention. FIG. **2**B illustrates a profile view of the same component. FIG. **2**C illustrates an inside face view of the same component. FIG. **2**D illustrates an outside face view of the same component.

FIG. **2**E illustrates a perspective view of a second example pivot joint component in accordance with embodiments of the invention. FIG. **2**F illustrates a profile view of the same component. FIG. **2**G illustrates an inside face view of the same component. FIG. **2**H illustrates an outside face view of the same component.

The first component **100** has a first inside face **102** and a first outside face **110**. The first outside face is adapted for connection with at least one of (i) a support element and (ii) a base end of an elongate object. The body of the first component **100** defines a first substantially toroid central wiring passage **104** and a perimeter **106**. The first component **100** also includes receiving holes **108** (e.g., threaded bolt holes) configured to receive and engage one or more protrusions (e.g., threaded bolts).

The second component **200** has a second outside face **210** and a second inside face **202**. The second outside face is adapted for connection with at least one of (i) a support element and (ii) a base end of an elongate object (whichever is not connected with the first outside face **110** of first component **100**). The body of the second component **200** defines a second substantially toroid central wiring passage **204**, a perimeter **206**, and one or more arcuate channels **208** corresponding to receiving holes **108**. The channels **208** are located a radial distance from the common axis of rotation **112** and extend from the inside face **202** to the outside face **210** of the second component **200**. Each channel **208** includes a first channel end **212** and a second channel end **214**.

In some implementations, outside faces **110** and **210** may each be specifically adapted to connect to only one of (i) a support element or (ii) a base end, so that outside face **110** is adapted to connect to one and outside face **210** is adapted to connect to the other. In other implementations, the base end and the support element may be similar at their respective points of connection with the pivot joint components, such that outside faces **110** and **210** are adapted for connection with either one of (i) a support element or (ii) a base end, so that each face is configured to accept connection with both types of object (support element and base end). Some outside faces may be adapted for connection with several object types or sizes, such as, for example, poles of various shapes and diameters.

The first component **100** and second component **200** may be rotationally coupled to one another to form a pivot joint. For example, first component **100** and second component **200** may be joined so that inside faces **102** and **202** meet and toroid central wiring passages **104**, **204** are aligned to share a common axis **112**. The first component **100** and second component **200** may be attached to assemble the pivot joint by inserting threaded bolts (not shown) through channels **208** and engaging the bolts in at least two opposing threaded bolt holes **108**. A rotational surface of each of the inside faces is defined where the components meet in the process of rotating. The rotational surfaces contact in a rotational plane **114** and rotate about the common axis **112**, which is perpendicular to the rotational plane **114**.

FIGS. **3**A-**3**C illustrate an example assembled pivot joint in accordance with embodiments of the invention. FIG. **3**A illustrates a profile view of a first pivot joint component in accordance with embodiments of the invention. FIG. **3**B illustrates a reverse view of the same pivot joint. FIG. **3**C illustrates a side view of the same pivot joint.

Pivot joint **300** is formed from an interlocking first component **100** and a second component **200**, each comprising a flange plate. Outside faces **102**, **202** of the flange plates become outside faces of the pivot joint **300**. Pivot joint wiring passage **304** is formed from first wiring passage **104**, which is

encircled by hub **118**. Hub **118** extends from the first component **100** through the rotational plane, and abuts and overlaps with wiring passage **204**, which encircles hub **118**. Hub **118** may extend from the first component through the rotational plane to the plane defined by the second outside face **210** of the second component **200**, or substantially to the plane defined by the second outside face **210** (e.g., extending 90 percent, 95 percent, or more of the distance between the planes).

Collar **220** extends from the second component **200** through the rotational plane, and abuts and overlaps with perimeter **106**, which collar **220** encircles. Collar **220** may extend from the second component **200** through the rotational plane to the plane defined by the first outside face **110** of the first component **100**, or substantially to the plane defined by the first outside face **110** (e.g., extending 90 percent, 95 percent, or more of the distance between the planes). In some implementations, the hub and collar may extend past the respective outside faces to define the depth of the joint along the axis of rotation (joint depth **340**, FIG. **3**C).

Pivot joint **300** includes one or more protrusions **308** attached to first component **100** and extending from the first component **100** through the channels **208** of the second component **200** such that upon rotation of the second component with respect to the first component, the protrusions **308** travel along the channels **208**, or more accurately for implementations wherein the second component **200** is part of an upper pole assembly, the channels **208** travel around the protrusions **308**. These protrusions **308** may be threaded bolts **310**, pins, studs or any other protrusion cooperating with channels **208** to guide the relative rotation of the two components.

Protrusions **308** may be adapted for engagement with the first component **100** (e.g., bolts), or may be manufactured integral to the first component **100** (e.g., studs). That is, the first component **100** and protrusions **308** may be formed from the same continuous piece of material. For example, the first component **100** and protrusions **308** may be cast or molded in one mold. Alternatively, the first component **100** and protrusions **308** may be machined or otherwise cut as one continuous piece from the same block or sheet of plastic or metal. Other parts may also be formed integrally with the first component **100** or second component **200**.

In the pivot joint **300** of FIGS. **3**A-**3**C, an annular locking mechanism is formed from threaded bolt holes **108**, arcuate channels **208**, and threaded bolts **310**. Threaded bolts **310** may be inserted through channels **208** and engaged with threaded bolt holes **108** to rotationally couple the first component **100** and second component **200** to form the assembled pivot joint **300**. Threaded bolt holes **108** avoid the use of a nut to tighten the locking mechanism, which prevents loose nuts from becoming dangerous falling projectiles. The bolts **310** may also be captive bolts to prevent them from becoming falling projectiles.

Threaded bolts **310** may be tightened sufficiently to provide sufficient friction between the rotational surfaces on the inside faces of the flange plates (e.g., first component **100** and second component **200**) to prevent rotation. Upon installation of a pivoting pole assembly including pivot joint **300** (discussed in further detail below with reference to FIGS. **4**A-**4**B), each of the outside faces **102**, **202** is connected with an elongate object of the pivoting pole assembly. To provide for re-orienting the elongate object for repair, maintenance, and the like, the bolts may be loosened sufficiently to allow rotation.

This annular locking mechanism may provide a more uniform application of pressure over a larger rotational surface, thereby producing a configuration more reliably resistant to rotation. The locking mechanism is sufficient to prevent rotation due to the weight of the pole and may be sufficient to prevent rotation due to additional forces applied to the pole assembly (e.g., glancing blows from other objects at the worksite, a worker hanging or pulling, strong winds, etc.). The annular locking mechanism may also allow the center of the pivot joint to remain open so that wiring may be run more efficiently through objects coupled to the pivot joint **300**. The arrangement of bolt holes **108**, arcuate channels **208**, and protrusions **308** also provides an orienting alignment function, discussed in further detail with respect to FIGS. **4**A-B below.

Pivot joint **300** may provide for increased structural integrity for supporting the load of the elongate object to be attached for installation of the pivoting pole assembly. Whereas pivot joints found in previous rotational poles feature either hollow designs or designs where the load is supported by a single central cylinder, in pivot joint **300** the load is distributed to a reinforced central hub **118** (also shown in FIG. **2**B) encircling pivot joint wiring passage **304** and a collar **220** (also shown in FIG. **2**E). By distributing the load to multiple points across the inside face of the joint, pivot joint **300** provides increased structural strength and smoother rotation to a pivoting pole assembly, resulting in greater control of movement. Although the central hub **118** is shown as integral with component **100**, and collar **220** is shown as integral with component **200**, in alternative embodiments, the hub, collar, or both may be integral with either first component **100** or second component **200**, or may be later attached to either component. Some pivot joints according to the present disclosure may include multiple collars, additional hubs, rings, or spokes, struts, and so on. In some embodiments, either or both of reinforced central hub **118** and collar **220** extend through the rotational plane, providing further structural strength.

Pivot joint **300** may provide for increased structural integrity with respect to preventing ingress of moisture and the resulting break down of lubrication in the joint. These problems may lead to excessive friction, which may cause increased wear and a higher likelihood of dangerous non-uniform (i.e., start-stop) motion when rotating the joint.

Outside faces **102**, **202** of pivot joint **300** include a first annular mating surface **320** and second annular mating surface **322**, respectively. First annular mating surface **320** lies between the first central wiring passage **102** and the first perimeter **106**. The first annular mating surface **320** may lie radially between the first central wiring passage **102** and protrusions **308**. Second annular mating surface **322** lies between the second central wiring passage **202** and the second perimeter **206**. The second annular mating surface **322** may lie radially between the second central wiring passage **202** and channels **208**. Annular mating surfaces **320**, **322** may be delineated through etching or other surface markings **350**, **352**.

The mating surfaces are adapted for connection with a rim of a tubular object. Mating surfaces **320**, **322** may be adapted for a welded connection. Mating surfaces **320**, **322** may be sufficient for allowing a welded connection of a tubular elongate object so that at an outside face of the pivot joint **300**, the object encircles pivot joint wiring passage **304**, allowing wiring to run through the wiring passage **304** and an interior passage of the elongate object (not shown) to a mounted item. In other implementations, the mating surface comprises a raised connectable surface, as in the conversion kit disclosed below with respect to FIG. **5**B.

Pivot joint **300** further comprises a lubrication system. The lubrication system comprises a lubrication port **312** for

receiving the lubrication. The lubrication port is in fluid connection with a lubrication channel **230** (FIG. **2**E) which distributes lubrication around the rotational surfaces of pivot joint **300**. The lubrication system allows distribution of lubrication to the pivot joint without loosening or removing components of the joint.

Further embodiments of the present disclosure include pivoting pole assemblies incorporating a pivot joint as described above. FIGS. **4**A-**4**B illustrate an example pivoting pole assembly in accordance with embodiments of the invention. FIG. **4**A illustrates a profile view of a first pivoting pole assembly in accordance with embodiments of the invention. FIG. **4**B illustrates a reverse view of the same pivoting pole assembly.

Pivoting pole assembly **400** comprises a pivot joint **402** implemented according to embodiments of the invention, such as, for example, pivot joint **300**, pivot joints utilizing pivot joint component **550**, or any other pivot joint encompassed by the present invention. Pivot joint **402** pivotally connects a lower object section **404** and an upper object section **406** to form pivoting pole assembly **400**. Lower object section **404** and upper object section **406** may be elongate objects, such as, for example, poles, shafts, towers, and the like. Lower object section **404** and upper object section **406** may be cylindrical or square tubular members made from aluminum, stainless steel, galvanized steel, or other durable material.

Structurally, the rotational pole assembly may include an upper pole assembly rotationally coupled to a lower pole assembly. The lower pole assembly may include a first component **100** welded or otherwise connected to lower object section **404**. The upper pole assembly may include a second component **200** welded or otherwise connected to upper object section **406**.

Pivot joint **402** is shown having second component **200** connected to the upper object section **406** at an angle (e.g., 35 degrees, 45 degrees, etc.) and the first component **100** connected to the lower object section **404** at a complementary angle (e.g., 55 degrees, 45 degrees, etc.), so that, as a result, the upper object section **406** and lower object section **404** are both 90 degrees from horizontal. The upper object section **406** and lower object section **404** may be aligned with one another or offset. Other implementations may be configured so that one or both of upper object section **406** and lower object section **404** are not perfectly vertically oriented (i.e., aligned at an angle other than 90 degrees from horizontal). In some implementations, this may be reversed so that second component **200** faces downward and is connected to lower object section **404** and first component **100** is connected to upper object section **406**.

Pivot joint **402** includes one or more protrusions **308** (as described above) attached to a first component **100** and extending from the first component **100** through channels **208** of the second component **200** such that upon rotation of the second component with respect to the first component, the protrusions **308** travel along the channels **208**, or more accurately, the channels **208** travel around the protrusions **308**.

Protrusions **308** may be threaded bolts **310** tightenable to provide sufficient friction to prevent rotation of the second component **200** of the pivot joint **402** and along with it upper object section **406**. Pivoting pole assembly **400** may be used as part of a wired pole assembly, such as a light pole. FIG. **4**C illustrates an example pivoting pole assembly in an access orientation in accordance with embodiments of the invention. To provide for re-orienting the elongate object to access mounted items for repair, maintenance, and the like, the bolts may be loosened sufficiently to allow rotation when desired. Because upper object section **406** is attached to the pivot joint **402** at the base end **408**, the change in orientation of the upper object section **406** caused by the rotation of the pivot joint **402** and upper object section **406** causes the remote end **410** of the upper object section **406** to be raised or lowered. As a result, the upper pole section may be oriented to place the item at a lower elevation that better facilitates access to the item when access is required (FIG. **4**C), and then re-oriented to restore the item to a higher elevation for daily operation (FIGS. **4**A-**4**B).

As discussed briefly above, the arrangement of receiving holes **108**, arcuate channels **208**, and protrusions **308** also provides an orienting alignment function. The design and placement of the protrusions and arcuate channels on the pivot joint **402** may dictate the range of motion of the upper object section **406**, and thus the range of motion of any mounted items. The range of rotation of the protrusions **308** with respect to arcuate channels **208** corresponds to the range of rotation of the upper object section **406**. This range of rotation comprises a range of possible rotation defined by the one or more first channel ends **212** and the one or more second channel ends **214**. Thus, when pivot joint **402** and upper object section are installed in a specific predetermined orientation, the channel ends **212**, **214** represent hard stops at predetermined orientations for the upper object section **406**. Therefore, with the dimensions of the upper object section, the location of any mounted items on the upper object section, and the installation orientation and installation height (height above walkway or other predominant surface) of the pivot joint taken into account, the channel ends **212**, **214** represent hard stops at predetermined elevations for mounted items. Thus, the first channel end **212** prevents overshoot when lifting the upper object section **406** into an operational orientation, which may provide simpler, easier, safer, and/or more precise operation.

The elongate object is pivotable through a range of motion corresponding to the arcuate channels. Pivot joint **402** is configured in light of the dimensions of the attached upper object section **406**, the mounted object location, and the installation orientation and installation height of the pivot joint; pivot joint **402** is configured to produce a predetermined elevation to optimize one or more maintenance or repair operations or a combination of maintenance and/or repair operations.

As a result, upon at least one protrusion **308** abutting at least one first channel end **212**, the upper object section **406** is aligned in an optimal operational orientation; and upon at least one protrusion **308** abutting at least one second channel end **214**, the upper object section **406** is aligned in an optimal target orientation providing access to the mounted item at an optimum access elevation. The configuration of the optimal target orientation may also prevent the item or the upper object section **406** from striking the ground or the walkway. In other implementations, the elevation of the remote end of upper object section **406** may be configured in place of the mounted item.

The optimal operational orientation may correspond to a perfect vertical orientation (i.e., 90 degrees from horizontal) for the upper object section **406**, or just past a perfect vertical orientation so that minimal effort is required to be exerted by a user to maintain the upper object section **406** in position with the protrusion against the channel end **212** while the pivot joint **402** is tightened or otherwise locked in place. The optimal operational orientation may also correspond with the preferred or maximum height for a mounted item or for an item otherwise attached to the upper section.

The optimal target orientation may correspond to a horizontal orientation or a slightly above or below horizontal orientation. The optimal target orientation may be configured to provide access to the mounted item at an optimum access elevation. The optimum access elevation may include various elevations according to the item to be maintained or replaced, the schedule of maintenance or replacement, the operating environment, number of available workers, ergonomic or safety concerns, union rules, government or association regulations, local population preferences, and so on.

For example, in some implementations the pivot joint may be used to place a light pole section in a predetermined optimal access orientation for performing maintenance work on the mounted item (such as, for example, a light fixture). This optimal orientation may locate the light fixture at an elevation to facilitate maintenance, such as, for example, a height just above a walkway, an average waist height for personnel, an average chest height for personnel; a point somewhere between; or any other desired predetermined elevation to optimize one or more maintenance operations. After maintenance is concluded, disclosed embodiments allow personnel to return the light pole section to a predetermined optimal operational orientation (such as, for example, 90 degrees from horizontal) which may be the section's nominal orientation throughout its operational lifetime.

Some embodiments may implement a threaded alignment stop **330** as one of the protrusions **308**. Secondary orientations may be available for selection using an optional threaded alignment stop **330** engaged with a secondary receiving hole **108'**. These secondary orientations may result in secondary predetermined elevations to optimize one or more maintenance operations. For example, a first maintenance operation may correspond to the lowest elevation produced from the optimal access orientation (e.g., changing a light fixture at a level just above contact with the walkway), while a second maintenance operation may correspond to a slightly higher elevation produced from a secondary optimal access orientation (e.g., wiring for loudspeakers at waist level). A secondary receiving hole may also be used to provide orientations suitable for accessing the item despite the presence of obstacles. For example, a secondary orientation may be used when accessing a pole located on or near stairwells or equipment.

In some implementations, the threaded alignment stop may be used to further lock the pivot joint **300** from rotating. A secondary receiving hole **108"** may be used to receive a secondary stop to lock the upper object section **406** in place at the ends of the range of rotation, or as a safety device to provide a minimum possible elevation until the stop is removed.

For example, a secondary threaded receiving hole **108'** may be configured so that, upon at least one protrusion **308** abutting at least one first channel end **212** (optimal operational orientation), a secondary receiving hole **108'** is aligned with a second channel end **214**, so that upon engagement with the secondary receiving hole **108'** the threaded alignment stop abuts or nearly abuts the second channel end **214**, thereby preventing rotation away from the optimal operational orientation.

In operation, a worker or team of workers may rapidly, easily, safely, and/or accurately toggle the orientation of the upper pole section **406** between an optimal operational orientation and an optimal target orientation for access to the upper pole section **406** or the item. For example, a worker may move the upper pole section **406** from an optimal operational orientation to an optimal target orientation by simply placing nominal pressure against the upper pole section **406** towards the first channel end **212**; loosening threaded bolts **310** to a rotational tightness; and then lowering the upper pole section **406** until it stops at the predetermined optimal target orientation. To restore the upper pole section **406** to the optimal operational orientation, the worker lifts the upper pole section until hitting the first channel end **212**; and then tightens the threaded bolt **310**.

To place the upper pole section **406** into a secondary optimal target orientation, a worker may engage the secondary stop into a desired secondary receiving hole **108'**; place nominal pressure against the upper pole section **406** towards the first channel end **212**; loosen threaded bolts **310** to a rotational tightness; and then lower the upper pole section **406** until it stops at the predetermined secondary optimal target orientation.

Construction and installation of a pivoting pole assembly may be carried out as separate operations or combined. Construction of the pivoting pole assembly may include cutting a desired length of tubular steel at a desired junction point to produce an upper section and a lower section. The cut is made at an angle, such as, for example, 45 degrees. Similar sections may be produced by cutting shorter lengths of steel tubing at complementary angles. The components of the pivot may then be welded or otherwise connected to the sections such that the resulting upper pole assembly and lower pole assembly may be assembled at the inside faces of the components so that the pivot joint rotationally couples the assemblies.

In some cases, installation may include replacing previous pole installations. In such cases, it may be possible to use all or part of the previous pole in the construction of the pivoting pole assembly. In such cases, the pole to be replaced may be wired into an existing electrical system. It is often necessary to rewire all or part of the pole. FIG. **5**A illustrates a pivoting pole assembly **500** incorporating a junction box module **502**. The pivoting pole assembly **500** of FIG. **5**A shows a junction box module **502** incorporated into lower pole assembly **501**. FIG. **5**B illustrates an upper pole assembly **508** incorporating a junction box module **502**. The junction box module **502** provides access to wiring running internal to the pole (or any other elongate object, depending on form factor) which may then be sealed against environment conditions. The junction box module **502** includes a compartment **504** coupled to the pole with fluid connection to the interior passage of the pole, the compartment having a sealable opening to the pole exterior. The opening may be sealable by a cap **506**. The cap and the opening may be threaded for weatherproof engagement. Some junction box modules may feature rectangular or other shapes, hinged lids, or other features common to electrical systems environmentally sealed for outdoor use.

Replacing a previous pole installation may also be carried out using a conversion pivot joint including a conversion pivot joint component for first component **100**. FIGS. **5**A, **5**C-**5**E illustrate a conversion pivot joint component according to embodiments of the invention. Referring to FIGS. **5**A, **5**C-**5**E, conversion pivot joint component **550** includes a mating surface extending from the outside face **110**. The mating surface may be implemented as a tubular adaptor, such as, for example, lock nut assembly **560**. Lock nut assembly **560** comprises a longitudinally sectioned threaded cylinder **562** and a corresponding nut **564**. The pre-existing pole or sections of it may be inserted into the lock nut assembly **560** and engaged by rotating nut **564** in the appropriate direction so that it travels away from component **100** and towards the pre-existing pole section, thereby tightening threaded cylinder **562** around the pole section and locking it into place. Other implementations may instead use a conversion pivot joint component for second component **200**.

FIG. **6** illustrates a pivoting pole assembly **600** incorporating a grounding strap **602** according to embodiments of the invention. Grounding strap **602** may be coupled at one end **604** to a grounding socket (not shown) in the outside face **102** of the first component **100** by a grounding screw (**350**, FIG. 3B). The opposing end **606** of the grounding strap **602** may be coupled to a grounding socket (not shown) on the perimeter **206** of the second component **200**.

The discussion above has focused primarily on embodiments of the invention for use with pivoting pole assemblies for industrial light poles. Other embodiments may be used with other types of elongate objects, or in other environments. It should be understood that the inventive concepts disclosed herein are capable of many modifications. To the extent such modifications fall within the scope of the appended claims and their equivalents, they are intended to be covered by this patent.

What is claimed is:

1. An apparatus for use in a pivoting pole assembly, the pivoting pole assembly comprising (a) an elongate object including a base element and a support element and (b) an item mounted to the support element at a remote end of the support element relative to the base element, the apparatus comprising:

a first component defining a first central wiring passage, and comprising a first outside face, the first outside face adapted for connection with at least one of the support element and the base element of the elongate object, and a first inside face; and

a second component defining a second central wiring passage, and comprising a second outside face, the second outside face adapted for connection with at least the other of a the support element and the base element of the elongate object, and a second inside face rotationally coupled to the first inside face such that the first central wiring passage and the second central wiring passage are fluidly connected; and the first component rotates with respect to the second component about a common axis of rotation;

a grounding strap electrically coupling the first component and the second component; and

an annular locking mechanism configured to hold the first component immobile with respect to the second component, wherein the annular locking mechanism comprises:

one or more arcuate channels, defined by the second component, the channels located a radial distance from the common axis of rotation and extending from the second inside face to the second outside face of the second component, each channel comprising a first channel end and a second channel end; and

one or more protrusions extending from the first component and extending into the one or more channels such that, upon rotation of the second component with respect to the first component, each of the protrusions travels along one of the one or more channels, and a range of relative rotation of the second component with respect to the first component is defined by the length of the channels.

2. The apparatus of claim **1** wherein the apparatus is configured such that, upon connection of the base element and the support element, respectively, to opposing faces chosen from the first outside face and the second outside face:

the elongate object is pivotable through a range of motion corresponding to the arcuate channels such that the remote end of the support element may be raised or lowered through rotation of the first component; and

rotation of the first component and the second component with respect to one another comprises a range of possible rotation defined by the one or more first channel ends and the one or more second channel ends.

3. The apparatus of claim **2**, wherein the apparatus is configured for an elongate object of a particular length attached to at least one of the first outside face and the second outside face of the apparatus at a particular angle such that upon the installation of the pivoting pole assembly with the base element of the elongate object and the support element being connected to the respective opposing faces, and the item being mounted at a particular location on the elongate object:

upon at least one protrusion abutting at least one first channel end, the elongate object is aligned in an optimal operational orientation; and

upon at least one protrusion abutting at least one second channel end, the elongate object is aligned in an optimal target orientation providing access to an item mounted on the elongate object at an optimum access elevation.

4. The apparatus of claim **1** wherein the first component and the second component each comprises a toroid.

5. The apparatus of claim **1** wherein the first component and the second component comprise interlocking flange plates.

6. The apparatus of claim **1** wherein one or more of the at least one protrusion in the first component comprises a bolt threadedly engaged with the first component.

7. The apparatus of claim **6** wherein the bolt is threadedly tightenable into the first component, and the locking mechanism comprises the bolt biasing the first component and the second component together.

8. The apparatus of claim **1** wherein the first outside face comprises a first perimeter and a first annular mating surface between the first central wiring passage and the first perimeter, the mating surface adapted for connection with a rim of a tubular object.

9. The apparatus of claim **8** wherein the mating surface is adapted for a welded connection.

10. The apparatus of claim **1** wherein the second outside face comprises a second perimeter and a second annular mating surface between the second central wiring passage and the second perimeter, the mating surface adapted for connection with a rim of a tubular object.

11. The apparatus of claim **10** wherein the mating surface is adapted for a welded connection.

12. The apparatus of claim **8** or **10**, wherein the mating surface comprises a tubular adaptor in fluid connection with the first central wiring passage, the tubular adapter configured to receive an elongate object.

13. The apparatus of claim **1** further comprising a hub extending through the plane of rotation from the inside face of at least one of the first component and the second component and substantially to the plane defined by the outside face of the other of the first component and the second component.

14. The apparatus of claim **1** further comprising a collar extending through the plane of rotation from the inside face of at least one of the first component and the second component and substantially to the plane defined by the outside face of the other of the first component and the second component, and encircling the perimeter of the other of the first component and the second component.

15. The apparatus of claim **1** further comprising an elongate object having a base element coupled to the first component and a support element connected to the second component.

16. The apparatus of claim **1** further comprising an elongate object having a base element coupled to the second component and a support element connected to the first component.

17. The apparatus of claim **15** or **16** wherein the support element comprises a second elongate object.

18. The apparatus of claim **15** or **16** wherein the elongate object further comprises a junction box module.

19. An apparatus for use in a pivoting pole assembly, the pivoting pole assembly comprising (a) an elongate object including a base element and a support element and (b) an item mounted to the support element at a remote end of the support element relative to the base element, the apparatus comprising:

a first component defining a first central wiring passage, and comprising a first outside face, the first outside face adapted for connection with at least one of the support element and the base element of the elongate object, and a first inside face;

a second component defining a second central wiring passage, and comprising a second outside face, the second outside face adapted for connection with at least the other of a the support element and the base element of the elongate object, and a second inside face rotationally coupled to the first inside face such that the first central wiring passage and the second central wiring passage are fluidly connected; and the first component rotates with respect to the second component about a common axis of rotation;

a junction box module; and

an annular locking mechanism configured to hold the first component immobile with respect to the second component;

wherein at least one of the first outside face and the second outside face comprises a perimeter and a tubular mating surface radially located between the perimeter and the outermost of the first central wiring passage and the second central wiring passage, the tubular mating surface comprising a tubular adaptor in fluid connection with at least one of the first central wiring passage and the second central wiring passage, the tubular adapter configured to receive an elongate object, and wherein the junction box module is in fluid connection with the tubular adaptor.

* * * * *