US009534626B2

(12) **United States Patent**
Walton et al.

(10) **Patent No.: US 9,534,626 B2**
(45) **Date of Patent: Jan. 3, 2017**

(54) **ENVIRONMENTAL PROTECTION FOR LOWERABLE POLE**

(71) Applicant: **Swivelpole Patent Pty Ltd**, Mandurah, Western Austrailia (AU)

(72) Inventors: **Michael Walton**, Houston, TX (US); **Andrew J. Grant**, Houston, TX (US)

(73) Assignee: **SWIVELPOLE PATENT PTY LTD**, Mandurah, Western (AU)

(*) Notice: Subject to any disclaimer, the term of this patent is extended or adjusted under 35 U.S.C. 154(b) by 0 days.

(21) Appl. No.: **14/443,091**

(22) PCT Filed: **Jun. 6, 2014**

(86) PCT No.: **PCT/AU2014/000590**

§ 371 (c)(1),
(2) Date: **May 15, 2015**

(87) PCT Pub. No.: **WO2014/194367**

PCT Pub. Date: **Dec. 11, 2014**

(65) **Prior Publication Data**

US 2015/0275961 A1 Oct. 1, 2015

Related U.S. Application Data

(63) Continuation-in-part of application No. 13/913,175, filed on Jun. 7, 2013, now abandoned.

(51) **Int. Cl.**
F16C 5/00 (2006.01)
E04H 12/18 (2006.01)
(Continued)

(52) **U.S. Cl.**
CPC ***F16C 5/00*** (2013.01); ***E04H 12/187*** (2013.01); ***F21V 21/36*** (2013.01); *F21V 21/10* (2013.01); *Y10T 403/16* (2015.01)

(58) **Field of Classification Search**
CPC F21V 21/10; F21V 21/26; F21V 21/28; F21V 21/30; F21V 21/36; F16L 2/028; F16L 2/032; F16L 27/0841; F16L 27/0849; H02G 3/06; E04H 12/18; E04H 12/187
See application file for complete search history.

(56) **References Cited**

U.S. PATENT DOCUMENTS

442,809 A 12/1890 Hunter 285/181
783,987 A 2/1905 Walsh 285/184
(Continued)

FOREIGN PATENT DOCUMENTS

CA 2163491 3/1997
DE 2918532 11/1980
(Continued)

OTHER PUBLICATIONS

International Search Report (ISR) issued in connection with corresponding International Patent Application No. PCT/AU2014/000590, dated Sep. 5, 2014.
(Continued)

Primary Examiner — Daniel Wiley
(74) *Attorney, Agent, or Firm* — Kusner & Jaffe

(57) **ABSTRACT**

An environmentally robust joint for use in a lowering pole assembly comprising a lower pole section and an upper pole section. The joint includes a lower adaptor comprising a lower pivot member defining a first central wiring passage and an upper adaptor comprising an upper pivot member defining a second central wiring passage communicating with the first central wiring passage. The upper pivot member is rotationally coupled to the lower pivot member, and sharing a common axis of rotation. At least one of the lower adaptor and the upper adaptor comprises a pole adaptor mounted at an operative angle to the axis of rotation. The pole adaptor includes an open end for receiving an end of a
(Continued)

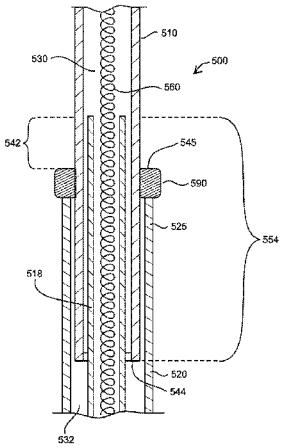

pole section, and an internal wiring tube communicating with the first central wiring passage and the second central wiring passage.

11 Claims, 15 Drawing Sheets

(51) **Int. Cl.**
F21V 21/36 (2006.01)
F21V 21/10 (2006.01)

(56) **References Cited**

U.S. PATENT DOCUMENTS

852,157	A	4/1907	Behan	303/86
960,899	A	6/1910	Guyer	285/181
1,020,839	A	3/1912	Niesen	285/184
1,233,170	A	7/1917	Berry	285/90
1,526,336	A	2/1925	Hart	285/31
1,601,014	A	9/1926	Wismer	362/386
1,605,507	A	11/1926	Burke	285/98
1,822,260	A	9/1931	Adams	285/181
1,880,098	A	9/1932	Mair	285/184
2,212,747	A	8/1940	O'Leary	285/87
2,250,448	A	9/1941	Edwards	403/337
2,342,120	A	2/1944	Cartwright	239/125
2,447,947	A	8/1948	Larson	285/181
2,448,494	A	8/1948	Moser	248/123.11
2,458,967	A	1/1949	Wiedenhoeft	248/283.1
2,479,580	A	8/1949	Marce	285/331
2,577,811	A	12/1951	Rutledge	403/102
2,632,660	A	3/1953	Krauthamer	403/53
2,694,585	A	11/1954	Fiori	403/120
2,729,473	A	1/1956	Warshawsky	285/153.1
2,910,309	A	10/1959	Snyder et al.	285/41
2,910,310	A	10/1959	Mulac	285/91
2,951,716	A	9/1960	Myers	285/273
2,990,204	A	6/1961	Golden	248/291.1
3,342,511	A *	9/1967	Galloway	F16B 7/00 285/149.1
3,355,847	A	12/1967	Pratt	52/116
3,366,788	A *	1/1968	Lantery	F21V 21/28 174/86
3,737,179	A	6/1973	White	285/96
3,778,610	A	12/1973	Wolf	362/418
4,008,910	A	2/1977	Roche	285/153.1
4,020,606	A	5/1977	Pratt	52/116
4,090,210	A	5/1978	Wehling	362/419
4,592,177	A	6/1986	Pratt	52/116
4,991,622	A	2/1991	Brewer et al.	137/512
5,016,154	A *	5/1991	Leeyeh	F21S 6/007 362/414
5,275,444	A	1/1994	Wythoff	285/90
5,333,436	A	8/1994	Noble	52/849
5,398,978	A	3/1995	Gagnon	285/363
5,624,198	A	4/1997	Fuchs	403/76
5,687,537	A	11/1997	Noble	52/849
5,772,172	A	6/1998	Sampedro	248/415
5,794,387	A	8/1998	Crookham	52/122.1
5,813,706	A	9/1998	Travis	285/363
6,045,239	A	4/2000	Waldmann	362/287
6,050,614	A	4/2000	Kirkpatrick	285/368
6,070,996	A	6/2000	McCollum	362/431
6,902,200	B1 *	6/2005	Beadle	F16C 11/04 285/185
6,957,832	B1	10/2005	Pannekoek	285/184
7,690,822	B2	4/2010	Kauffman	362/418
7,699,355	B2	4/2010	Vitel et al.	185/184
8,262,265	B2 *	9/2012	Hsieh	F21S 6/002 362/153
8,814,221	B2	8/2014	Grant	285/184
2006/0050519	A1 *	3/2006	Lin	F21S 6/003 362/413
2014/0261837	A1	9/2014	van der Meijden et al.	138/109
2014/0265308	A1	9/2014	Reilly et al.	285/153.1
2014/0360754	A1	12/2014	Walton et al.	174/86

FOREIGN PATENT DOCUMENTS

DE	4210625	10/1993
DE	10152129	4/2003
FR	2217625	9/1974
GB	410600	5/1934

OTHER PUBLICATIONS

Patent Examination Report No. 1 issued in connection with corresponding Australian Patent Application No. 2014277622, dated Feb. 23, 2015.

* cited by examiner

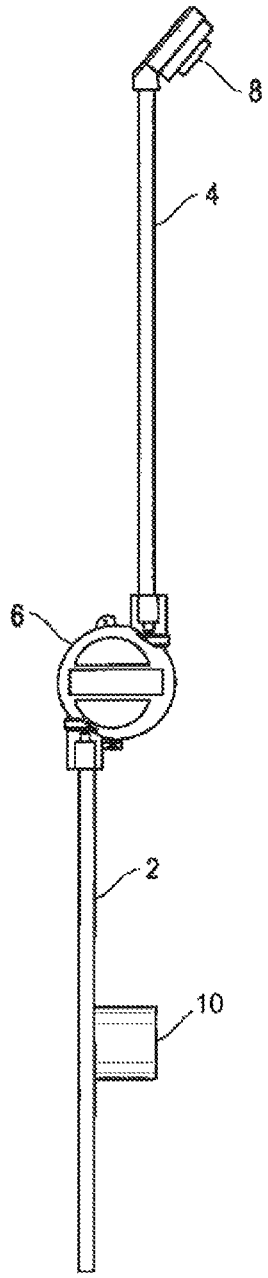

FIG. 1A
(Prior Art)

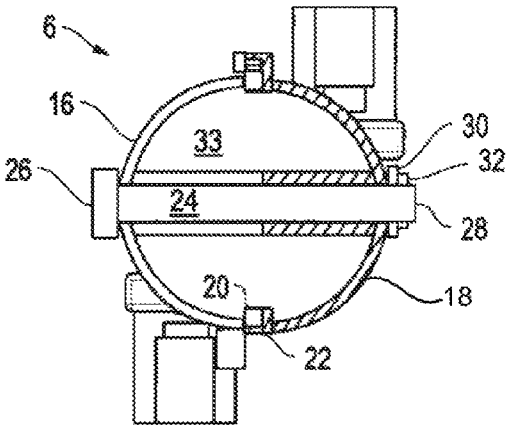

FIG. 1B
(Prior Art)

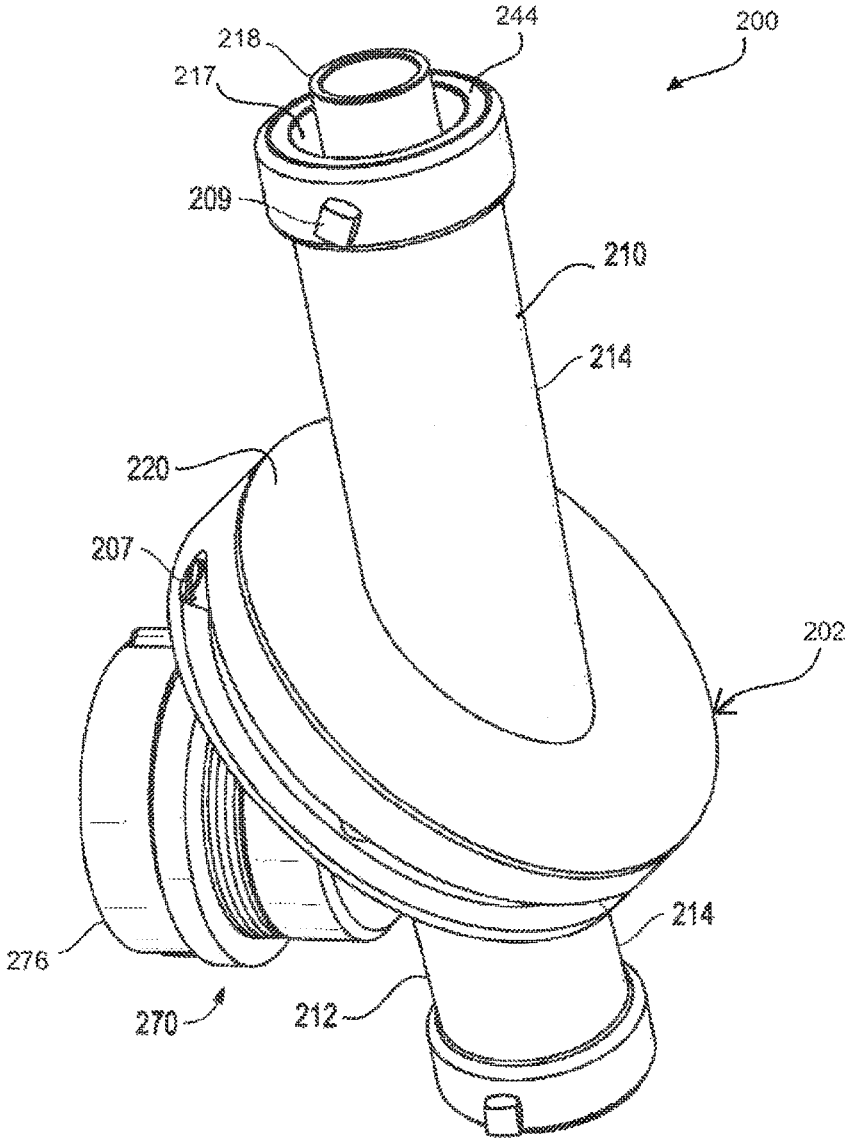

FIG. 2A

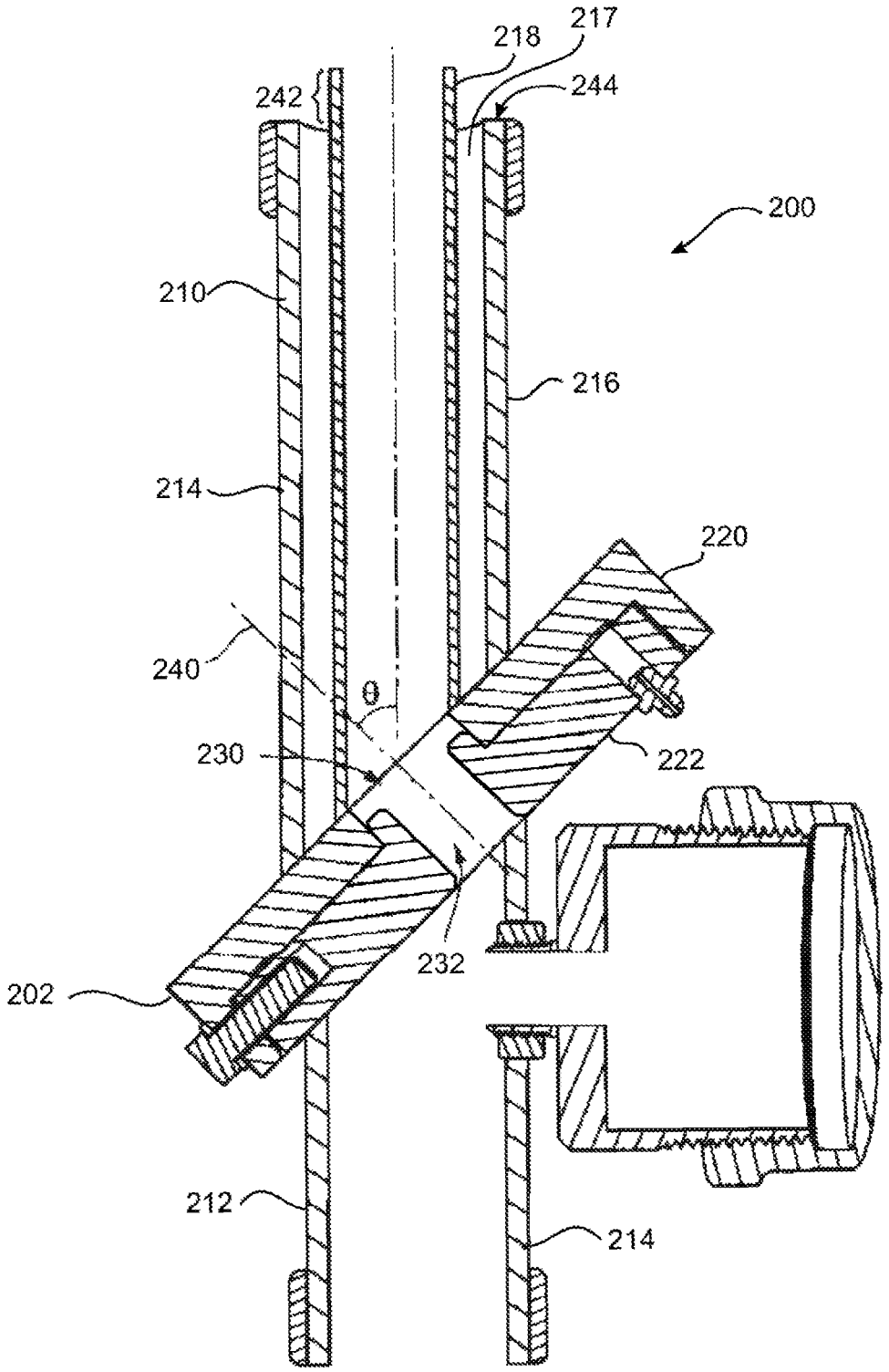

FIG. 2B

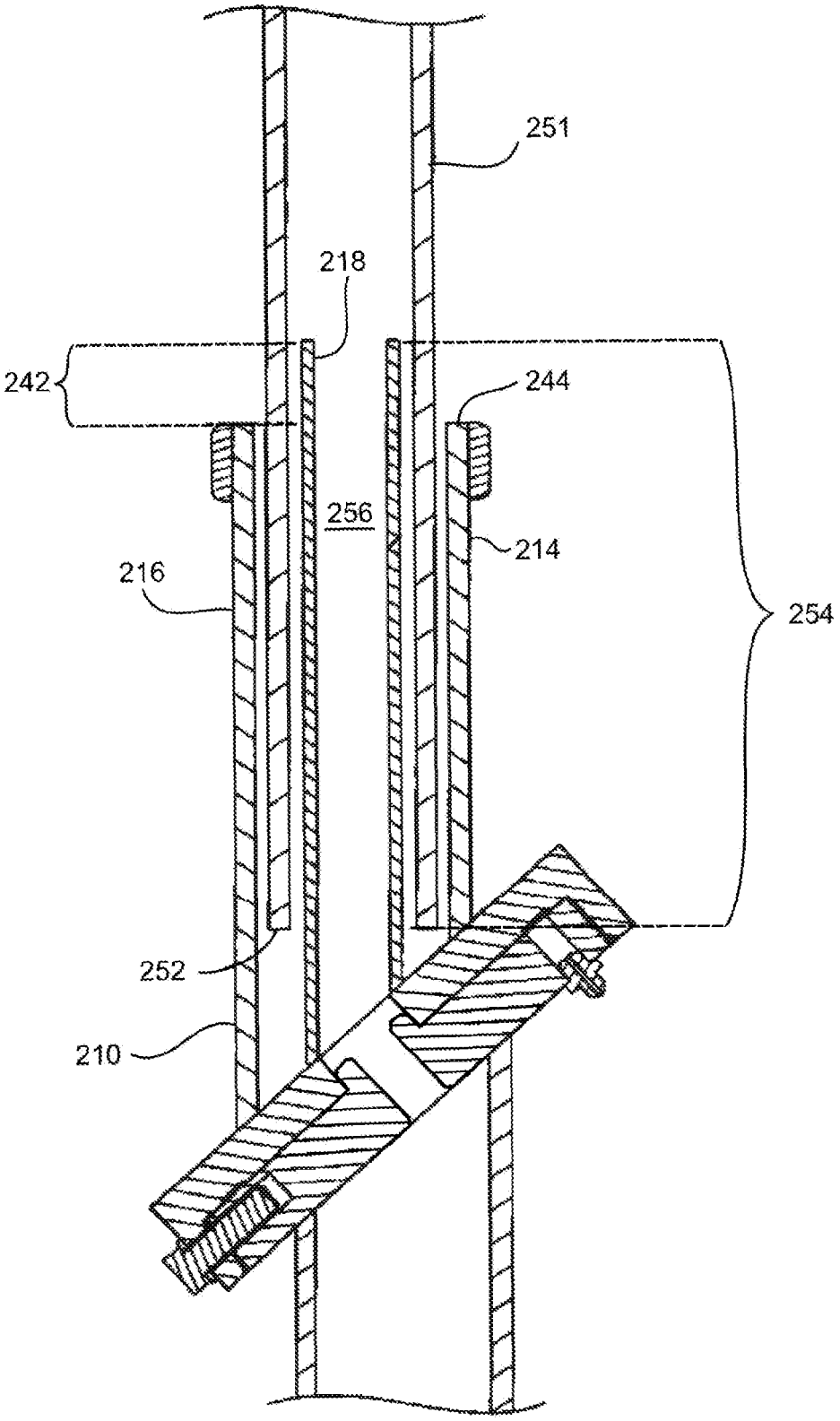

FIG. 2C

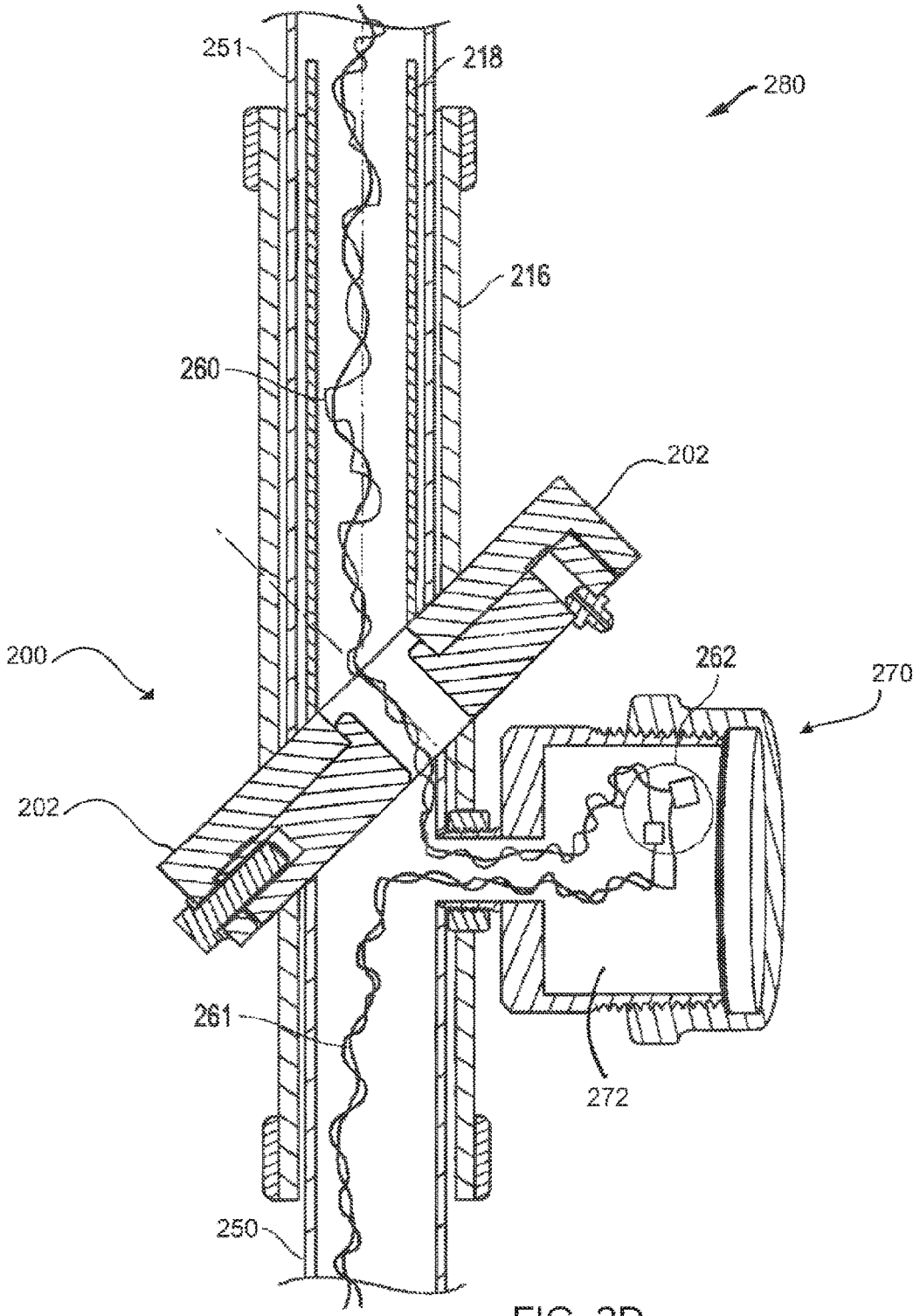

FIG. 2D

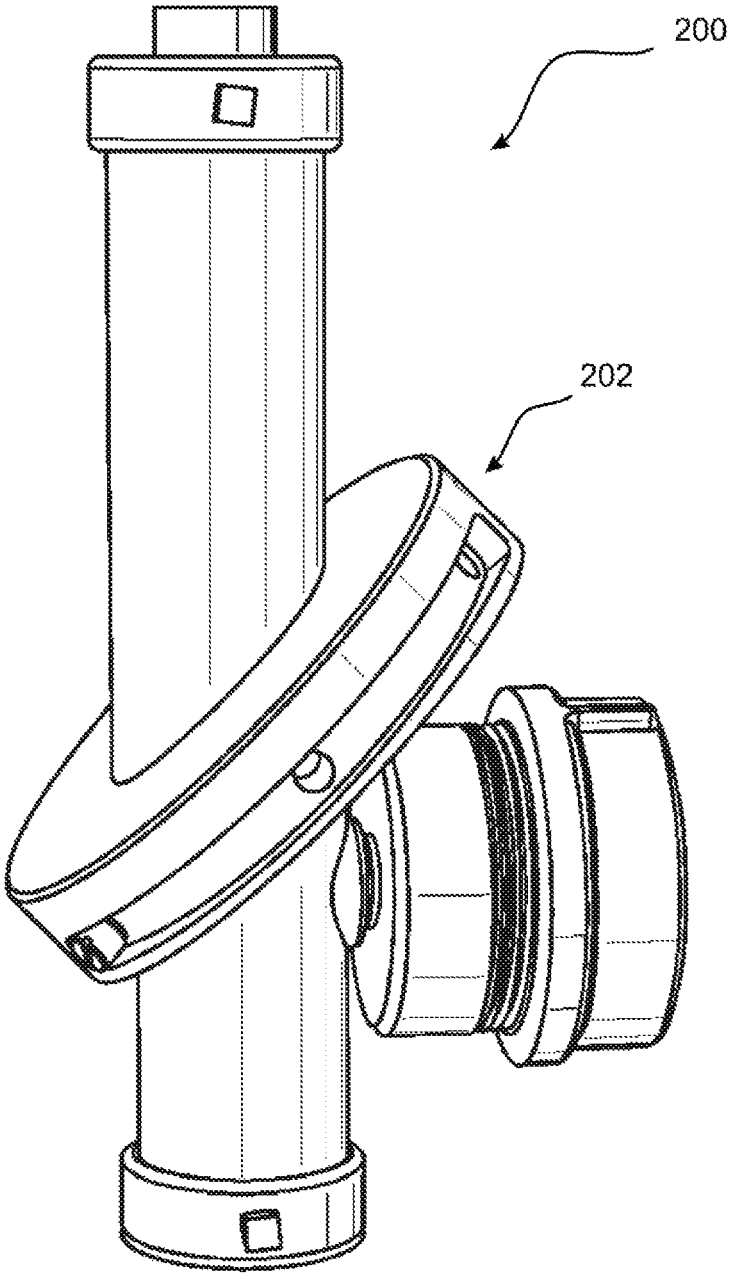

FIG. 2E

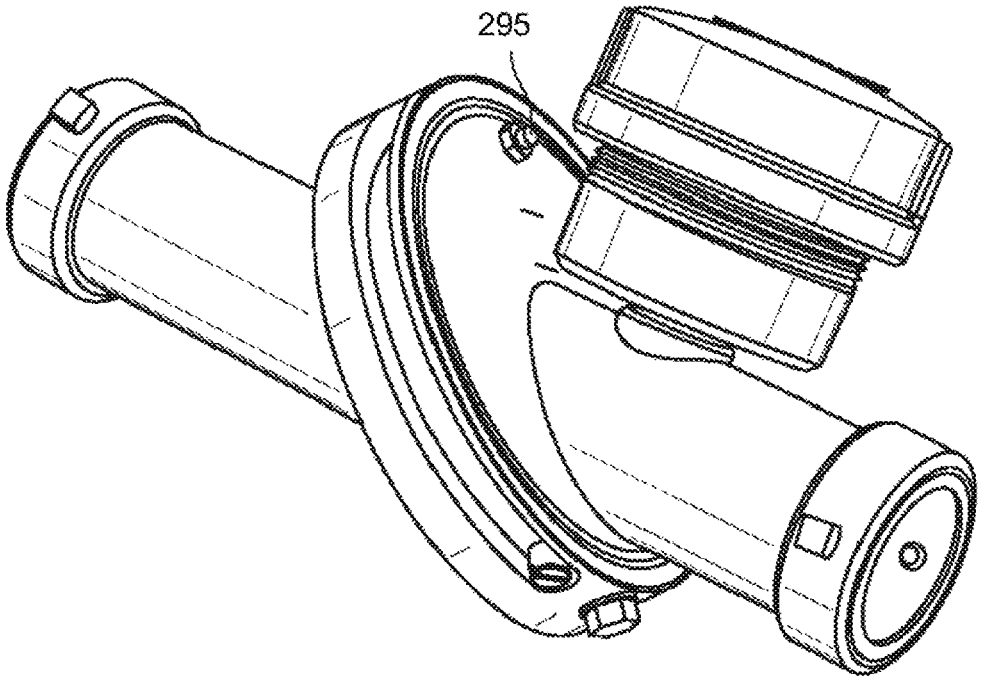

FIG. 2F

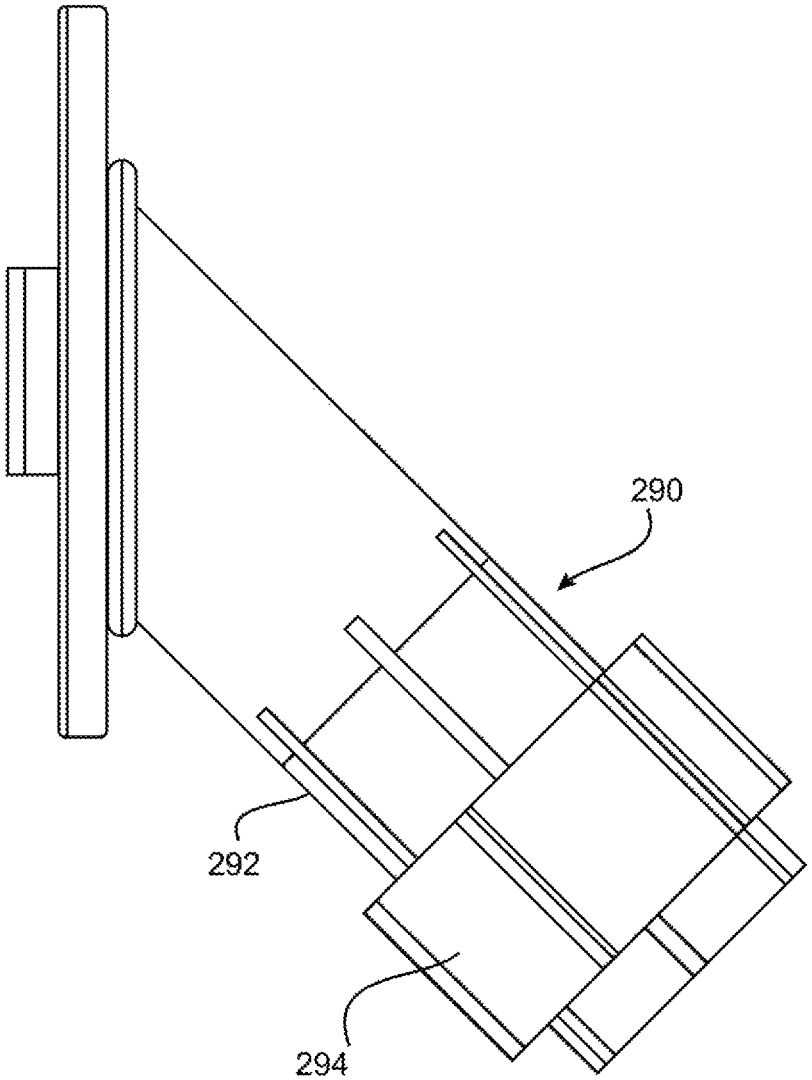

FIG. 2G

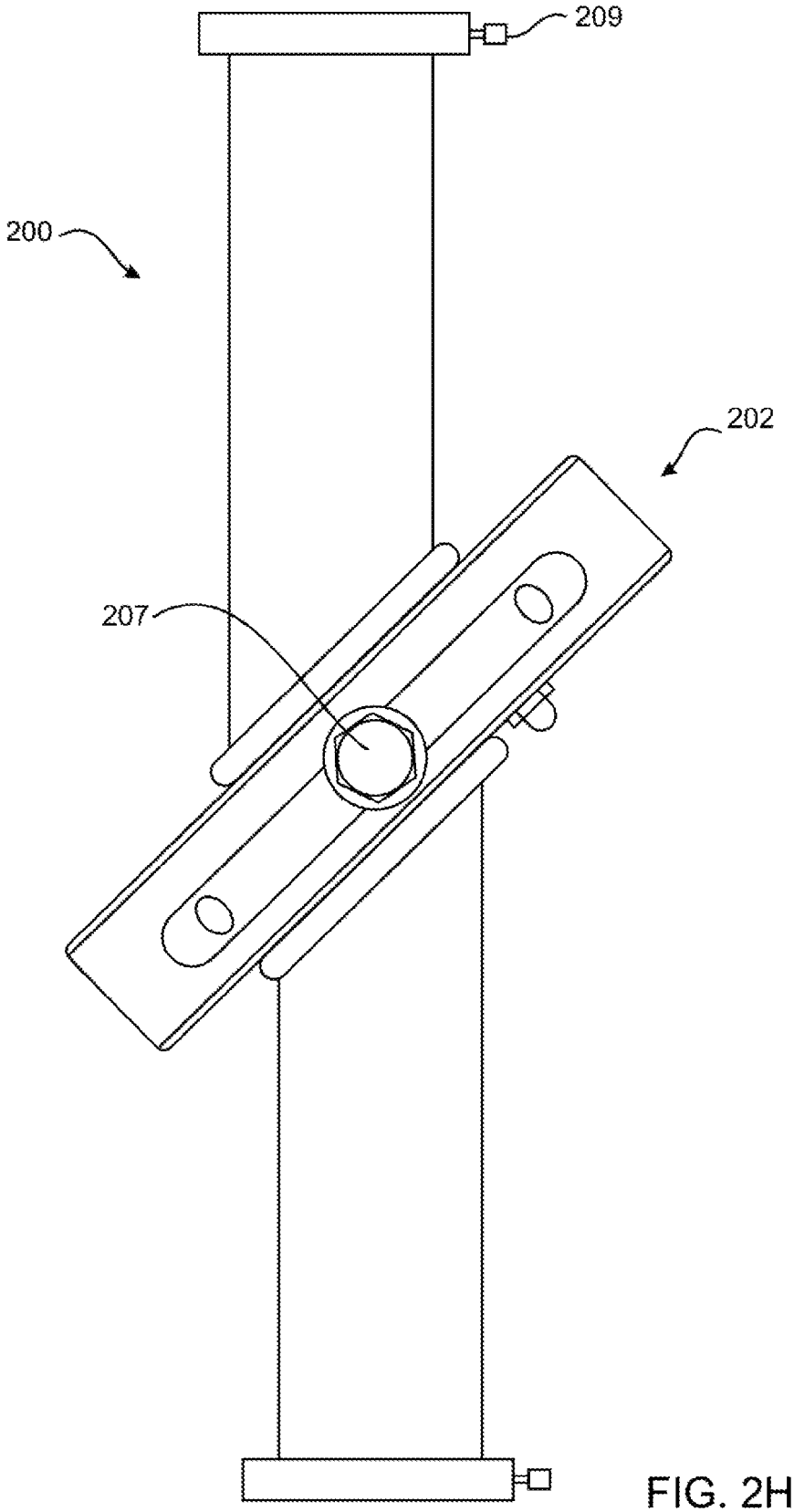

FIG. 2H

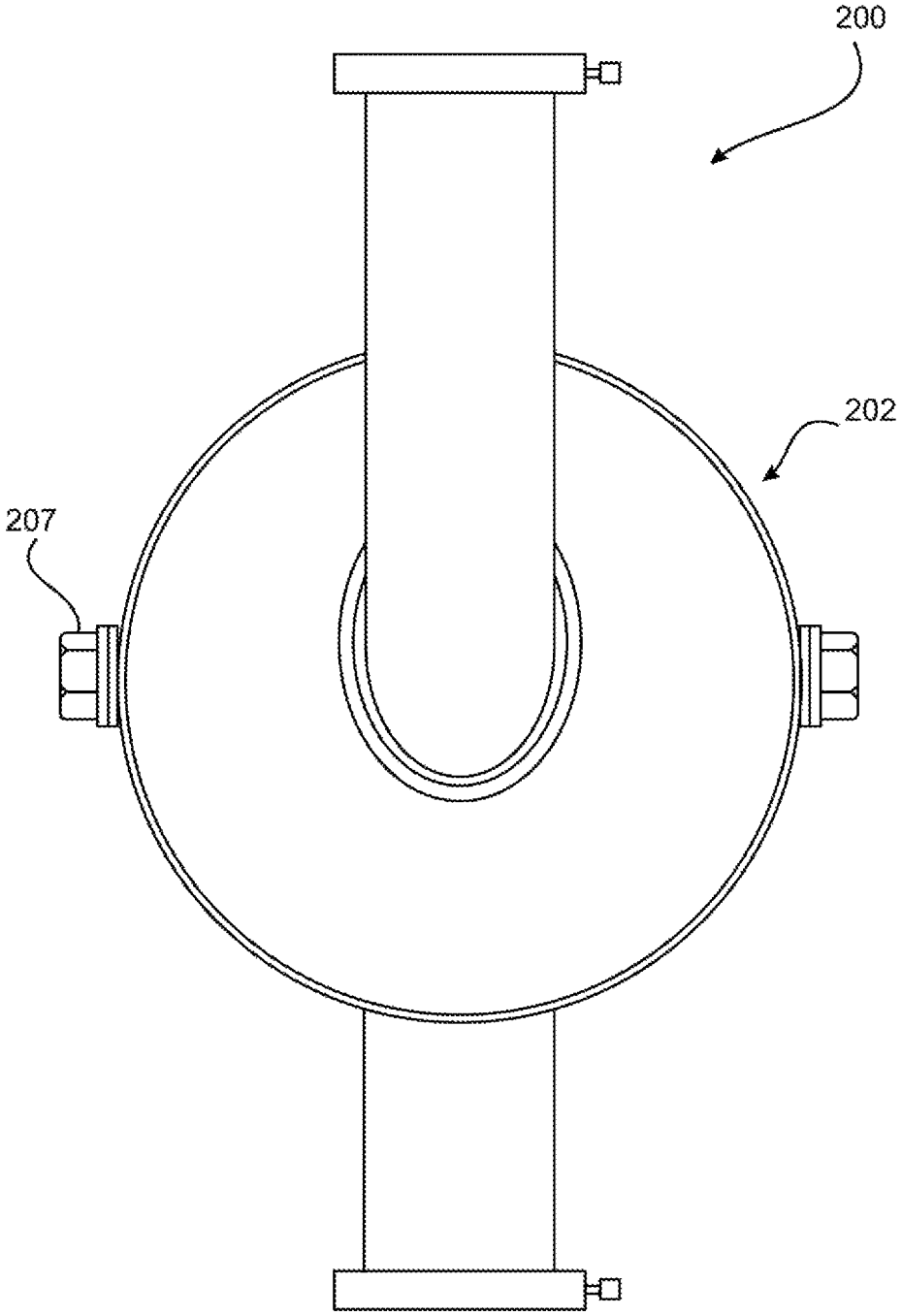

FIG. 2I

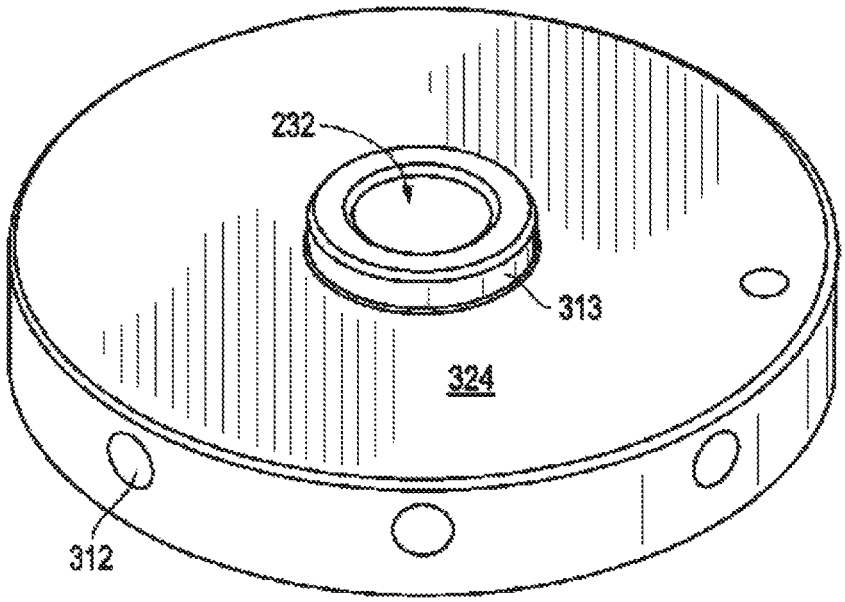

FIG. 3A

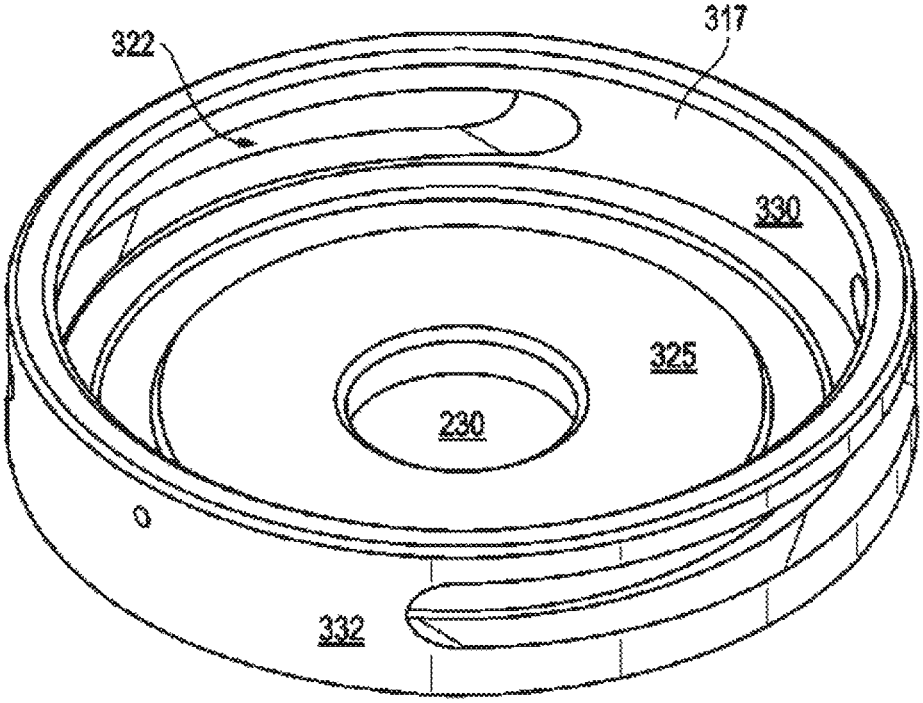

FIG. 3B

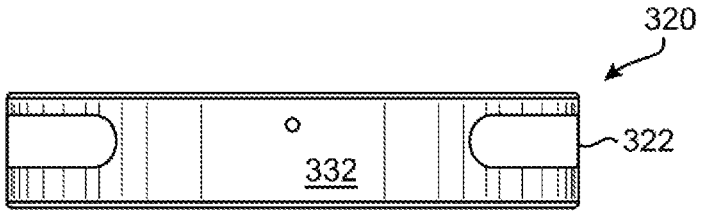

FIG. 3C

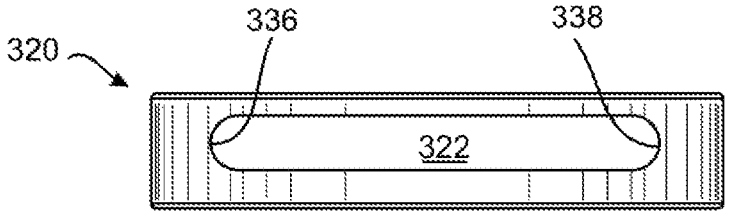

FIG. 3D

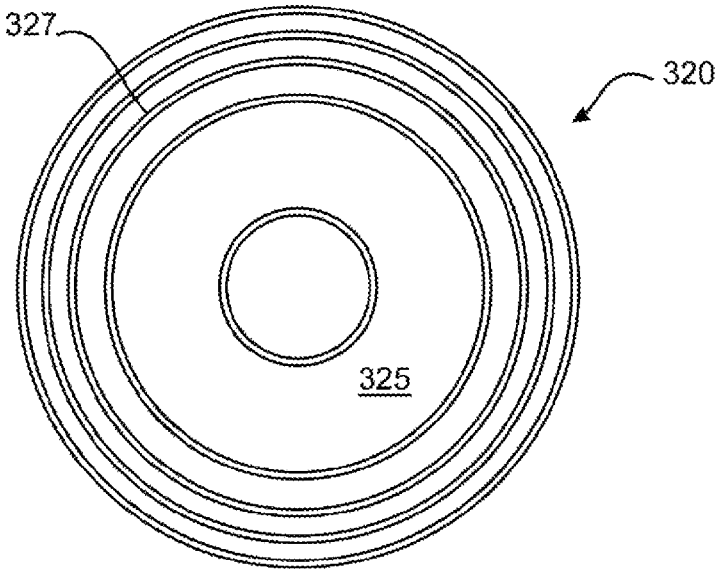

FIG. 3E

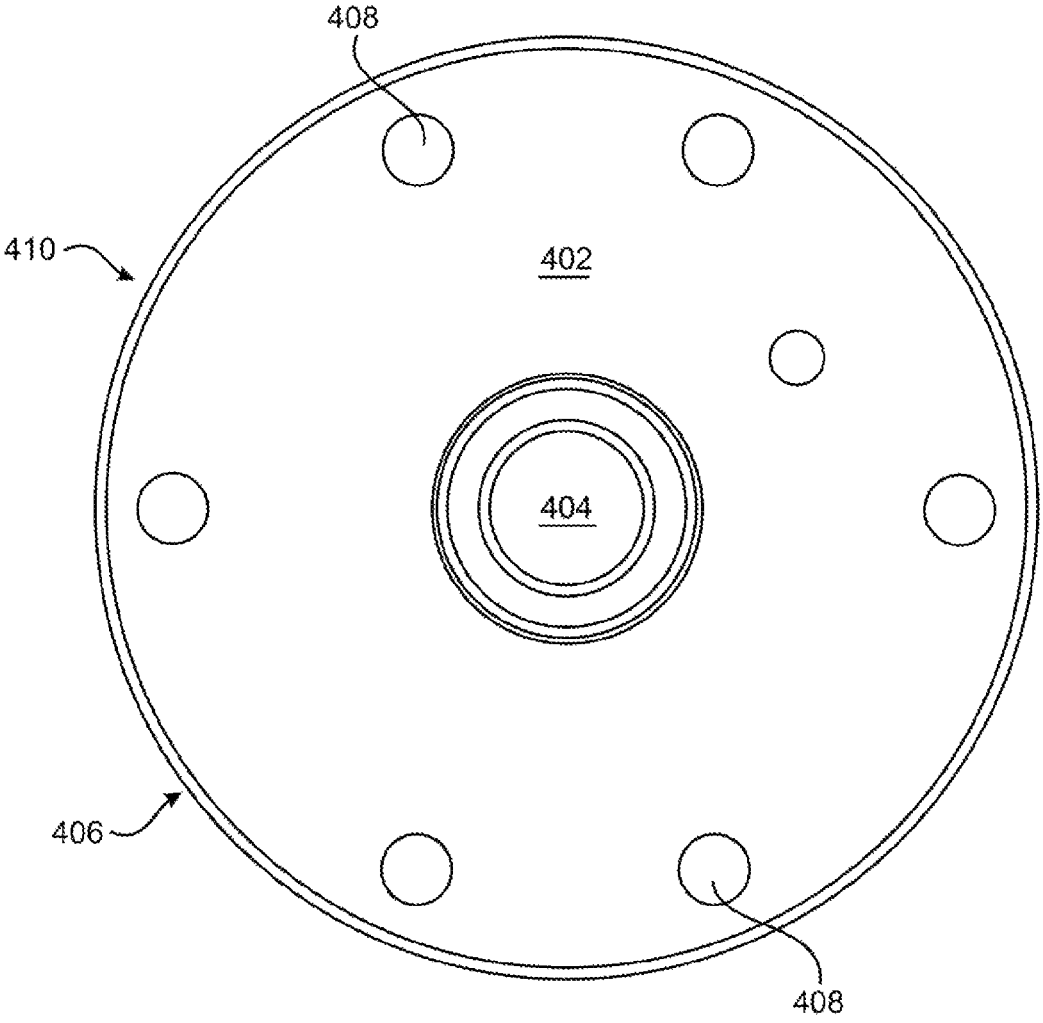

FIG. 4A

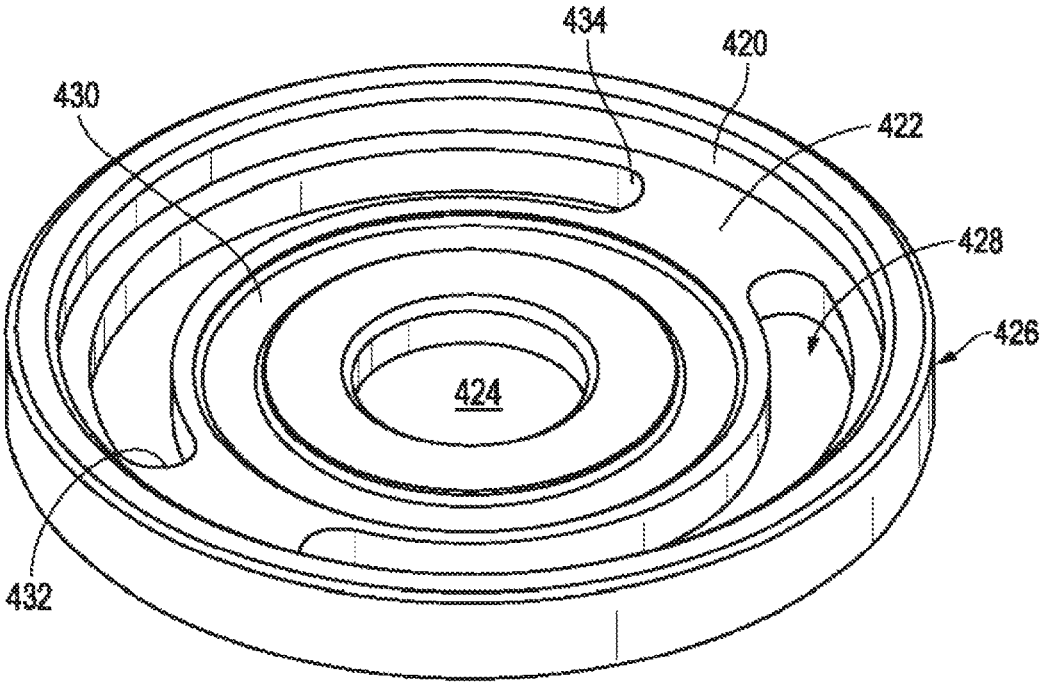

FIG. 4B

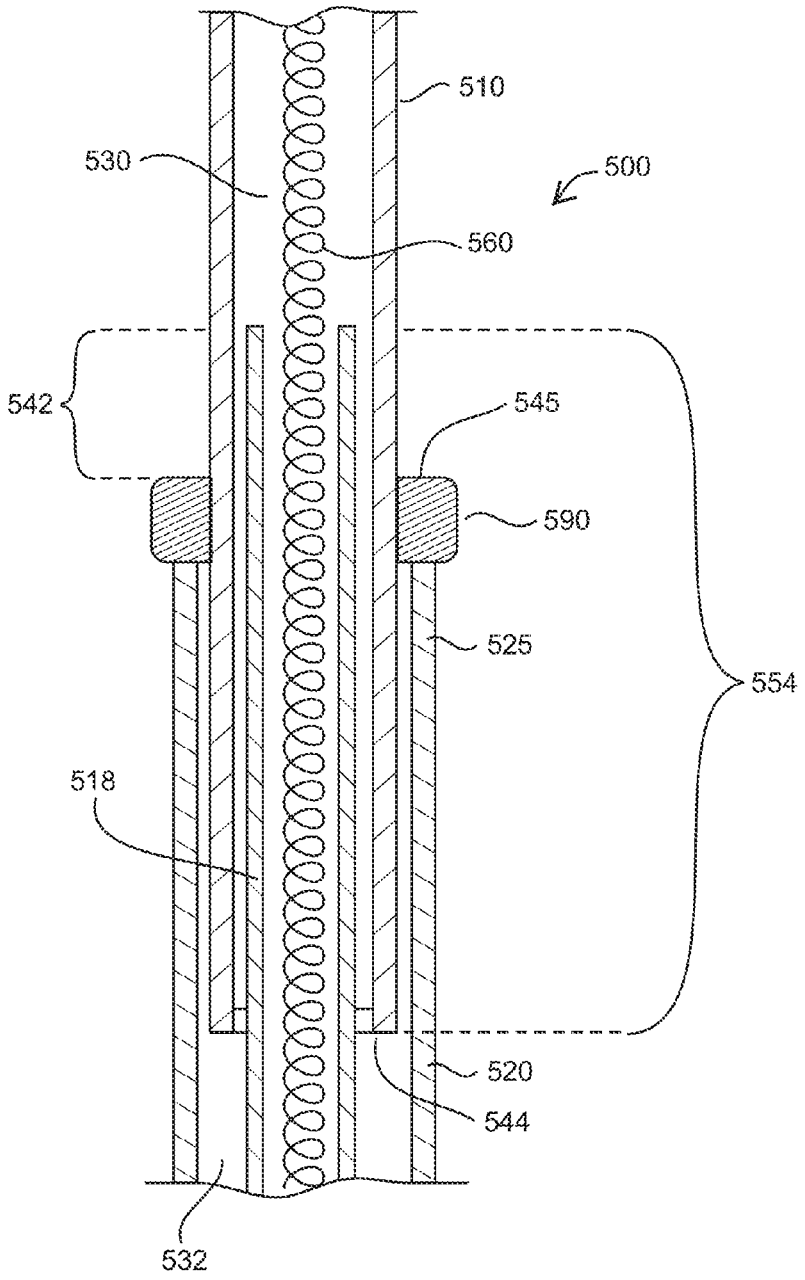

FIG. 5

ENVIRONMENTAL PROTECTION FOR LOWERABLE POLE

RELATED APPLICATIONS

This application is a U.S. National Stage Application of International Application No. PCT/AU14/00590, filed Jun. 6, 2014, which claims the benefit of U.S. application Ser. No. 13/913,175, filed Jun. 7, 2013.

FIELD OF THE INVENTION

The present invention relates to poles, such as light poles, which are lowerable. Although the invention has been developed in connection with light poles including a swivelling joint, it is considered applicable to other lowering poles including hinged poles and telescoping poles.

BACKGROUND TO THE INVENTION

Due to the perils of ladder use in industrial settings and the general inconvenience of maintenance of pole-mounted items, industrial poles (e.g., lighting poles) have been developed that have upper and lower pole sections arranged to be connected by a joint, such as a swivelling or pivot joint, a hinged joint, or a telescoping joint. The principle is that these joints permit a user to lower the remote (e.g., top) end of the pole using the joint. For example, moving the top end to a level closer to the pole base may facilitate changing light bulbs or performing other maintenance.

In the case of a swivelling or pivot joint, the upper pole section is attached to the joint such that upper pole section rotates about an axis of rotation relative to the bottom end of the upper pole section. The axis of rotation is not parallel with the longitudinal axis of the pole. Instead, the swivelling or pivot joint is mounted with the axis of rotation at an acute angle to both the upper and lower sections. In this way the nominal top end of the upper pole section travels downward in an arc corresponding to the rotational motion of the swivelling or pivot joint. The system including the joint and the coupled upper and lower sections of the pole may be called a pivoting pole assembly, swivelling pole assembly, etc.

In the case of a hinged joint, the upper pole section is arranged relative to the lower pole section such that it can rotate about an axis perpendicular to the longitudinal axis of the pole.

In the case of a telescoping joint, the upper pole section is arranged to be moveable in an axial direction relative to the lower pole section, with one of the upper and lower pole sections having a smaller diameter than the other.

Some known systems also have a passage interior to the pole extending from the base end, through the joint, to the remote end, and wiring (wires, cables, etc.) running through the passage to the mounted item to provide power, communications, and so on. This wiring can be subject to damage due to environmental conditions, particularly where the joint permits ingress of water.

The present invention seeks to provide a means of protecting internal wiring within a lowerable pole.

SUMMARY OF THE INVENTION

According to one aspect of the present invention there is provided a joint for use in a lowering pole assembly, the lowering pole assembly including a lower pole section and an upper pole section, the upper pole section being moveable

relative to the lower pole section, the joint including a lower portion defining a first central wiring passage which is fixed relative to the lower pole section; and an upper portion defining a second central wiring passage which is fixed relative to the upper pole section, the second central wiring passage communicating with the first central wiring passage; the joint including an internal wiring tube communicating with the first central wiring passage and the second central wiring passage.

The lowering pole assembly may include wiring or cabling operatively coupled with a mounted item. The item could be, for example, a light fixture, remote camera, loudspeaker, or any other item.

The upper pole section may be receivable inside a receiving sleeve. The receiving sleeve may form part of the lower pole section, or may be connected to the upper portion of the joint. The internal wiring tube may be configured to overlap the end of the upper pole section, forming a fluid flow barrier between the receiving sleeve and the upper pole section. The internal wiring tube may include a first end that protrudes from an open end of the receiving sleeve along the longitudinal axis.

In the case of a telescoping joint, the internal wiring tube may be arranged such that its uppermost end is above the uppermost end of the lower pole section and its lowermost end is below the lowermost end of the upper pole section.

In the case of a swivelling joint, the axis of rotation may intersect the first wiring passage and the second wiring passage. The axis of rotation may be coaxial with the first wiring passage and the second wiring passage. At least one of the lower joint portion and the upper joint portion may include a junction box module. The lower joint portion and the upper joint portion may each include a pole adaptor mounted at an operative angle to the axis of rotation. Each pole adaptor may be substantially cylindrical and the longitudinal axis of the cylindrical pole adaptor of the lower joint portion and the longitudinal axis of the cylindrical pole adaptor of the upper joint portion may be coaxial or offset.

A swivelling joint may include an upper pivot member and a lower pivot member, along with an annular locking mechanism configured to selectably hold the upper pivot member immobile with respect to the lower pivot member. The annular locking mechanism may include one or more arcuate channels formed on at least one of the lower pivot member and the upper pivot member, the channels radially offset from the axis of rotation; and at least one guide member corresponding to each arcuate channel disposed on the other of the lower pivot member and the upper pivot member. The one or more arcuate channels and the at least one corresponding guide member may rotate with respect to one another such that the at least one guide member tracks along one of the one or more arcuate channels, and a range of relative rotation of the upper pivot member with respect to the lower pivot member is defined by the length of the channels. One or more of the at least one guide member may include an elongate member engaged with the other of the lower pivot member and the upper pivot member. One or more of the at least one guide member may include an elongate member engaged with the other of the lower pivot member and the upper pivot member. One or more of the at least one guide member may include at least one of: i) a threaded bolt; ii) a pin; iii) a dowel; iv) a rod; and v) a protrusion. The upper pivot member and the lower pivot member may include interlocking flange plates.

BRIEF DESCRIPTION OF THE DRAWINGS

It will be convenient to further describe the invention with reference to preferred embodiments of the present invention.

Other embodiments are possible, and consequently the particularity of the following discussion is not to be understood as superseding the generality of the preceding description of the invention. In the drawings:

FIGS. **1**A and **1**B (Prior Art) illustrate perspective views of a particular prior art rotational pole and pivot joint.

FIGS. **2**A-**2**I illustrate pivot joint adaptors in accordance with embodiments of the present disclosure.

FIGS. **3**A-**3**E illustrate pivot members in accordance with embodiments of the present disclosure.

FIGS. **4**A-**4**B illustrate an alternative embodiment of a pivot joint in accordance with embodiments of the invention.

FIG. **5** illustrates a joint according to an alternative embodiment of the present invention.

DETAILED DESCRIPTION OF PREFERRED EMBODIMENTS

Lowering pole assemblies are known in the art. FIGS. **1**A and **1**B illustrate perspective views of a particular prior art rotational pole and pivot joint, respectively. Referring to FIG. **1**A, the prior art rotational pole includes a lower conduit **2**, an upper conduit **4**, a pivot joint **6**, a light fixture **8**, and a junction box **10**. The pole may be mounted to a rail or attached to a base (not shown). Electrical wiring (not shown) runs within conduits **2**, **4** from the base end of the pole **12** through pivot joint **6** to the remote end **14** and is connected to light fixture **8**. Upper conduit **4** may be pivoted down for maintenance.

Referring to FIG. **1**B, the prior art pivot joint **6** includes a fixed cup **16** and a rotating cup **18**. Together, the fixed cup **16** and the rotating cup **18** define a substantially spherical wiring chamber. The circular edges of the cups end in flanges **20**, **22** which meet in sliding rotational contact defining a swivel plane. The flanges **20**, **22** may include a lip so that one cup is partially nested in the other. The cups **16**, **18** are held together by a central locking bolt **24**, which passes approximately through the diameter of the spherical wiring chamber **33** formed by the cups. The bolt **24** includes a head **26** retained in a recess of the lower cup **16** and a threaded end **28** (opposite the head) protruding through the upper cup **18**, and held in place by a washer **30** and a nut **32** providing a compressive force against the outside of upper cup **18**. Pivot joint **6** may also include a rubber stop block, mechanical stops and/or an indexing pin (not shown). Stop block and the mechanical stop can be radially spaced ninety degrees (90°), one hundred eighty degrees (180°), or any other desired angle, with respect to each other. Moreover, removable stops can be provided to lock the lower and upper cups **14**, **16** in a vertical orientation. When the removable stops are removed, as the upper cup is rotated about the locking bolt with respect to the lower cup, the stop block makes contact with the mechanical stop at the desired angle and will prevent further rotation. An indexing pin can be inserted through aligned holes formed in the lower and upper cup flanges to temporarily lock the cups with respect to each other.

One embodiment of the present invention is as an environmentally robust pivot joint adaptor. The pivot joint adaptor allows for connection of a lower pole section and an upper pole section to form a pivot joint assembly. The pivot joint adaptors of the present disclosure are advantageous over the prior art in ways that will become apparent from more particular descriptions to follow of embodiments of this form of the invention.

Example embodiments were chosen and described in order to best explain the principles of the invention and their practical application, and to enable others of ordinary skill in the art to understand the invention for various embodiments with various modifications as are suited to the particular use contemplated. Those skilled in the art will understand, however, that the invention may be embodied as many other devices, systems, and methods. For example, various aspects of the methods and devices may be combined in various ways or with various products, including existing products. Many modifications and variations will be apparent to those of ordinary skill in the art. The scope of the invention is not intended to be limited by the details of example embodiments described herein. The scope of the invention should be determined through study of the appended claims.

Specific design details have been provided for illustration, but should not be considered limiting. Readers of skill in the art will recognize that many variations of lowering joints and lowering pole assemblies may be implemented consistent with the scope of the invention as described by the appended claims.

FIGS. **2**A-**2**H illustrate pivot joint adaptors **200** in accordance with embodiments of the present disclosure. Pivot joint adaptor **200** (also called a conversion pivot joint) may be used to assemble a wired pivoting pole assembly, without the use of welding equipment or heavy tools, by coupling a lower pole section **250** and an upper pole section **251** while enabling selectable rotation. Pivot joint adaptor **200** may also facilitate replacement of a previous pole installation.

Pivot joint adaptor **200** is environmentally robust in that it includes features that, upon completion of assembly, protect the wiring residing interior to the assembly. Pivot joint adaptor **200** includes a lower adaptor **212** terminating in a lower pivot member **222** defining a first central wiring passage **232**. Pivot joint adaptor **200** also includes an upper adaptor **210** including an upper pivot member **220** defining a second central wiring passage **230** communicating with the first central wiring passage **232**. Upper pivot member **220** and lower pivot member **222** are cooperatively coupled to share a common axis of rotation **240** and allow relative rotation about the common axis of rotation **240**, thus forming pivot joint **202** which pivotally connects upper adaptor **210** and lower adaptor **212**. The axis of rotation **240** may intersect the first central wiring passage **232** and the second central wiring passage **230**. Pivot joint components are discussed in greater detail below with reference to FIGS. **3**A-**3**E. At least one of the lower adaptor **212** and the upper adaptor **210** (and possibly both) includes a pole adaptor **214** mounted at an angle θ to the axis of rotation **240**. Pole adaptor **214** is oriented such that the lower pole section and the upper pole assembly are vertically oriented. Other implementations may be configured so that one or both of upper and lower pole sections are not perfectly vertically oriented (i.e., aligned at an angle other than 90 degrees from horizontal). The pole adaptor **214** includes a mating surface **216** and an internal wiring tube **218**. The mating surface **216** includes an open end for receiving an end of a pole section. The internal wiring tube **218** is communicating with the first central wiring passage **232** and the second central wiring passage **230**. Some adaptors **210**, **212** may include mating surfaces adapted for connection with several object types or sizes, such as, for example, poles of various shapes and diameters. The mating surface may be implemented as cylindrical or square tubular members made from aluminium, stainless steel, galvanized steel, or other durable material. The mating surface **216** includes at least one

fastener **209**, such as, for example, bolts or latches. The mating surface **216** may be configured to slide an exterior surface of a corresponding pole section along the interior mating surface **216**, although in other embodiments, the pole section may fit loosely in the annulus.

In other embodiments, the mating surface may include other fasteners, Referring to FIG. **2**G, mating surface includes lock nut assembly **290**. Lock nut assembly **290** comprises a longitudinally sectioned threaded cylinder **292** and a corresponding nut **294**. The pre-existing pole or sections of it may be inserted into the lock nut assembly **290** and engaged by rotating nut **294** in the appropriate direction so that it travels away from the pivot joint and towards the pre-existing pole section, thereby tightening threaded cylinder **292** around the pole section and locking it into place. Fasteners could also be implemented as any combination of latches, clamps, biasing members, elastomeric membranes, ratchets, or friction fit members.

Turning to FIG. **2**C, upon the upper pole section **251** being inserted within the pole adaptor **214**, such that the mating surface **216** receives an end **252** of the upper pole section **251**, the internal wiring tube **218** is configured to include a first overlap **254** between the internal wiring tube **218** and the received end **252** of the pole section **251** to provide a water resistant connection to the pole section **251**. This first overlap **254** may have sufficient dimension in the longitudinal direction to prohibit water from spilling over into the interior of the wiring tube where it may contact the wiring, such as, for example, 5 inches, 8 inches, 12 inches or more in the longitudinal direction. Overlap dimensions may be chosen in dependence upon the length, weight, or other characteristics of the pole section to be supported. Internal wiring tube **218** also includes uncovered portion **242**, which is not surrounded by a first end of pole adaptor **214** of upper adaptor **210**. Uncovered portion **242** protrudes from the mating surface **216** along the longitudinal axis such that it extends past an upper rim **244** of mating surface **216**. The upper rim **244** marks the highest level water may accumulate. Thus, uncovered portion **242** ensures water cannot enter the interior **256** of internal wiring tube **218**.

In some cases, installation may include replacing previous pole installations. In such cases, it may be possible to use all or part of the previous pole in the construction of the pivoting pole assembly. The pole to be replaced may be wired into an existing electrical system. It is often necessary to rewire all or part of the pole. FIGS. **2**A-**2**B and **2**D-**2**F illustrate a pivot joint adaptor **200** incorporating a junction box module **270**. The pivot joint adaptor **200** of FIG. **2**A shows a junction box module **270** incorporated into lower adaptor **212**. Additionally or alternatively, junction box module **270** may be incorporated into upper adaptor **210**, or left out entirely. The junction box module **270** provides access to wiring running internal to the pole which may then be sealed against environment conditions. The junction box module **270** includes a compartment **272** coupled to the lower adaptor **212** communicating with the interior passage of the lower adaptor **212**, the compartment having a sealable opening to the pole exterior. The opening may be sealable by a cap **276**. The cap **276** and the opening may be threaded for weatherproof engagement. Some junction box modules may feature rectangular or other shapes, hinged lids, or other features common to electrical systems environmentally sealed for outdoor use. Various embodiments may or may not include a junction box module. Note that the pivot joint adaptor of FIG. **2**C lacks a junction box module.

Referring to FIG. **2**D, pivoting pole assembly **280** is assembled by coupling lower pole section **250** and an upper pole section **251** using pivot joint adaptor **200**. Assembling the pivoting pole assembly **280** may be carried out by running upper wires **260** through upper pole section **251** and running lower wires **261** through lower pole section **250**, followed by running upper wires **260** through upper adaport **210** and running lower wires **261** through lower adaptor **212** until they meet in junction box **270**. Upper and lower wires **260**, **261** may be single conductors, twisted pair, optical fibre, coaxial cable, or any other wiring or cabling known in the art. Either or both of wires **260**, **261** may alternatively be legacy equipment from a previous installation. Further wiring **262** may be conveniently carried out in junction box **270**.

Assembly may be continued by assembling pivot joint adaptor **200** and engaging pole sections **250**, **251** with the mating surface **216** of the corresponding adaptor assembly **212**, **21**, with wires **260**, **261** in place. Pivot joint adaptor **200** may be assembled by connecting and engaging pivot members **220**, **222**. Mating surface **216** may be engaged with a respective pole section (**250**, **251**) by inserting the rim of the pole section into an open end **217** of the mating surface **216**, into the annulus formed by the mating surface **216** and the internal wiring tube **218**, and sliding the pole section axially until it comes to rest against the pivot member or other support member (not shown). Alternatively, fastener **209** may be engaged to support the pole section without support of the pole section from beneath. The extension of internal wiring tube **218** past the rim of mating surface **216** may facilitate insertion of the pole section **250**, **251**. Fastener **209** is engaged to prohibit movement of the pole section **250**, **251** with respect to the mating surface **216**.

Although pivoting pole assembly **280** is shown with both upper adaptor **210** and lower adaptor **212** having a pole adaptor **214**, in some embodiments only one of upper adaptor **210** and lower adaptor **212** includes pole adaptor **214**, and the other adaptor assembly is secured to the respective pole section using a welded connection or the like, or the adaptor assembly and the respective pole section are cast as a single unit.

FIGS. **3**A-**3**E illustrate pivot members in accordance with embodiments of the present disclosure. FIG. **3**A illustrates a perspective view of a first pivot joint component in accordance with embodiments of the invention. FIG. **3**B illustrates a perspective view of a second example pivot joint component in accordance with embodiments of the invention. FIGS. **3**C-**3**D illustrate profile views of the same component. FIG. **3**E illustrates an overhead view of the same component. Either of first pivot joint component or second pivot joint component may be incorporated as upper pivot member **220**, with the other of first pivot joint component and second pivot joint component incorporated as lower pivot member **222**.

Referring to FIGS. **3**A and **3**B, the first component **310** defines a first wiring passage **232** (or **230**), and includes receiving holes **312** (e.g., threaded bolt holes) along its perimeter **314**. The receiving holes **312** are configured to receive and engage one or more channel guides (e.g., threaded bolts). The body of the second component **320** defines a second central wiring passage **230** (or **232**), a collar **317**, and a perimeter **326**. The collar **317** includes arcuate channels **322** on the collar along perimeter **326** corresponding to receiving holes **312**. The channels are shown extending from an inner collar face **330** to an outer collar face **332**.

As described above, the first component **310** and second component **320** may be rotationally coupled to one another to form a pivot joint **202**. When assembled to form pivot joint **202**, a hub **313** extends from the first component **310** through the rotational plane, and abuts with the second

component **320**, which encircles hub **313**. Collar **317** extends from the second component **320**, and abuts and overlaps with perimeter **314**, which collar **317** encircles. For example, the components may be joined so that a generally planar inside surface **324** of the first component and meets a generally planar inside surface **325** of the second component **320**, and the central wiring passages **230**, **232** are aligned to share a common axis **240**. The first component **310** and second component **320** may be attached to assemble the pivot joint **202** by inserting threaded bolts (not shown) through channels **322** and engaging the bolts in at least two opposing threaded bolt holes **312**. A rotational surface is defined where the components meet in the process of rotating.

Returning to FIG. **3**A, one or more channel guides **207** (see FIG. **2**A) may be attached to the first component **310** and extend from the first component through arcuate channels **322** of the second component **320** such that upon rotation of the second component with respect to the first component, the guides **207** travel along the channels **322**, or in some embodiments, the channels **322** travel around the guides **207**. Channel guides **207** may be threaded bolts, pins, studs or any other protrusion cooperating with channels **322** to guide the relative rotation of the two components.

The arrangement of receiving holes, arcuate channels, and/or channel guides also provides an orienting alignment function. The design and placement of the guides and arcuate channels on the pivot joint **302** may dictate the range of motion of adaptor assemblies **210**, **212** with respect to one another and thus the range of motion of pole sections **250**, **251** (and of any mounted items). The range of rotation of the guides **207** with respect to arcuate channels **322** corresponds to the range of rotation of the upper adaptor **210**. This range of rotation comprises a range of possible rotation defined by the one or more first channel ends **336** and the one or more second channel ends **338**. When pivoting pole assembly is installed in a specific predetermined orientation, the channel ends **336**, **338** represent hard stops at predetermined orientations for the upper pole section **250**. The top end of the pole is pivotable through a range of motion corresponding to the arcuate channels.

The channel guides **207** and arcuate channels **322** form an annular locking mechanism that may provide a more uniform application of pressure over a larger rotational surface, thereby producing a configuration more reliably resistant to rotation. The locking mechanism is sufficient to prevent rotation due to the weight of the pole and may be sufficient to prevent rotation due to additional forces applied to the pole assembly (e.g., glancing blows from other objects at the worksite, a worker hanging or pulling, strong winds, etc.). The annular locking mechanism may also allow the centre of the pivot joint to remain open so that wiring may be run more efficiently through objects coupled to the pivot joint **202**.

Pivot joint **202** may provide for increased structural integrity for supporting the load of the elongate object to be attached for installation of the pivoting pole assembly. The load is distributed to a reinforced central hub and a collar. By distributing the load to multiple points across the inside face of the joint, pivot joint **202** provides increased structural strength and smoother rotation to a pivoting pole assembly, resulting in greater control of movement. Although the central hub **313** is shown as integral with first component **310**, and collar **317** is shown as integral with component **320**, in alternative embodiments, the hub, collar, or both may be integral with either first component or second component, or may be later attached to either component. Some pivot joints according to the present disclosure may include multiple collars, additional hubs, rings, or spokes, struts, and so on. In some embodiments, either or both of reinforced central hub and collar extend through a plane of rotation, providing further structural strength.

Pivot joint **202** may provide for increased structural integrity with respect to preventing ingress of moisture and the resulting break down of lubrication in the joint. These problems may lead to excessive friction, which may cause increased wear and a higher likelihood of dangerous non-uniform (i.e., start-stop) motion when rotating the joint.

Pivot joint **202** may further comprise a lubrication system including a lubrication port **295** (FIG. **2**F) for receiving the lubrication. The lubrication port **295** is in fluid connection with a lubrication channel **327** (FIG. **3**E) which distributes lubrication around the rotational surfaces of pivot joint **202**. The lubrication system allows distribution of lubrication to the pivot joint without loosening or removing components of the joint.

FIGS. **4**A-**4**B illustrate an alternative embodiment of pivot joint **202** in accordance with embodiments of the invention. FIG. **4**A illustrates an overhead view of a first pivot joint component in accordance with other embodiments of the invention. FIG. **4**B illustrates a perspective view of a second example pivot joint component in accordance with other embodiments of the invention. The first component **410** has a first inside face **402**. The body of the first component **410** defines a first substantially toroid central wiring passage and a perimeter **406**. The first component **410** also includes receiving holes **408** (e.g., threaded bolt holes) configured to receive and engage one or more protrusions (e.g., threaded bolts).

The second component **420** has a second inside face **422**. The body of the second component **420** defines a second substantially toroid central wiring passage **430**, a perimeter **426**, and one or more arcuate channels **428** corresponding to receiving holes **408**. The channels **408** are located a radial distance from the common axis of rotation and extend through the second component **420**. Each channel **408** includes a first channel end **432** and a second channel end **434**.

The first component **410** and second component **420** may be rotationally coupled to one another to form a pivot joint, as described above. For example, first component **410** and second component **420** may be joined so that inside faces **402** and **422** meet and toroid central wiring passages **430** are aligned. The rotational surfaces contact in a rotational plane and rotate about the common axis, which is perpendicular to the rotational plane.

Protrusions (not shown) may be adapted for engagement with the first component **410** (e,g., bolts), or may be manufactured integral to the first component **410** (e.g., studs). That is, the first component **410** and protrusions may be formed from the same continuous piece of material. For example, the first component **410** and protrusions may be cast or moulded in one mould. Alternatively, the first component **410** and protrusions may be machined or otherwise cut as one continuous piece from the same block or sheet of plastic or metal. Other parts may also be formed integrally with the first component **410** or second component **420**.

An annular locking mechanism may be formed from protrusions and arcuate channels. Pivot joint components as in FIGS. **4**A-**4**B may be sufficiently tightened to provide sufficient friction between the inside faces **324** and **325** of flange plates to prevent rotation.

To provide for re-orienting the elongate object to access mounted items for repair, maintenance, and the like, the

bolts may be loosened sufficiently to allow rotation when desired. The upper pole section may be oriented to place the item at a lower elevation that better facilitates access to the item when access is required, and then re-oriented to restore the item to a higher elevation for daily operation. Channel ends therefore prevent overshoot when lifting a connected upper pole section into an operational orientation, which may provide simpler, easier, safer, and/or more precise operation.

The optimal operational orientation may correspond to a perfect vertical orientation (i.e., 90 degrees from horizontal) for the upper pole section, or just past a perfect vertical orientation so that minimal effort is required to be exerted by a user to maintain the upper pole section in position with the guide against the channel end while the pivot joint is tightened or otherwise locked in place. The optimal operational orientation may also correspond with the preferred or maximum height for a mounted item or for an item otherwise attached to the upper pole section.

The optimal target orientation may correspond to a horizontal orientation or a slightly above or below horizontal orientation. The optimal target orientation may be configured to provide access to the mounted item at an optimum access elevation. The optimum access elevation may include various elevations according to the item to be maintained or replaced, the schedule of maintenance or replacement, the operating environment, number of available workers, ergonomic or safety concerns, union rules, government or association regulations, local population preferences, and so on.

For example, in some implementations the pivot joint may be used to place a light pole section in a predetermined optimal access orientation for performing maintenance work on the mounted item (such as, for example, a light fixture). This optimal orientation may locate the light fixture at an elevation to facilitate maintenance, such as, for example, a height just above a walkway, an average waist height for personnel, an average chest height for personnel; a point somewhere between; or any other desired predetermined elevation to optimize one or more maintenance operations. After maintenance is concluded, disclosed embodiments allow personnel to return the light pole section to a predetermined optimal operational orientation (such as, for example, 90 degrees from horizontal) which may be the section's nominal orientation throughout its operational lifetime.

In some implementations, the alignment stop may be used to further lock the pivot joint from rotating. The alignment stop may be threaded. A secondary receiving hole **312"/408"** may be used to receive a secondary stop to lock the upper object section **406** in place at the ends of the range of rotation, or as a safety device to provide a minimum possible elevation until the stop is removed.

For example, a secondary threaded receiving hole **312'/408'** may be configured so that, upon at least one guide abutting at least one first channel end (optimal operational orientation), a secondary receiving hole is aligned with a second channel end, so that upon engagement with the secondary receiving hole **312'/408'** the threaded alignment stop abuts or nearly abuts the second channel end, thereby preventing rotation away from the optimal operational orientation.

As used herein, the term "operative angle" means an angle of between 5 degrees and 85 degrees.

FIG. **5** illustrates schematically an alternative embodiment of the present invention, used in connection with a telescoping light pole **500**. The light pole **500** has an upper pole section **510** which is arranged to slide within a receiving sleeve **525**, being an upper portion of a co-axial lower pole section **520**, to effect lowering of the light pole. A locking means **590** is located at an upper end of the lower pole section **520**, to selectively permit or restrict movement of the upper pole section **510**.

The upper pole section **510** is hollow, with a first wiring passage **530** defined within. The lower pole section **520** is also hollow, with a second wiring passage **532** defined within.

An internal wiring tube **518** is axially aligned internally of the upper pole section **510** and lower pole section **520**. The upper pole section **510** includes an inner rim **544** at a lower end thereof.

The internal wiring tube **518** is configured to include a first overlap **554** between the internal wiring tube **518** and the rim **544** of the upper pole section **510**. Internal wiring tube **518** also includes uncovered portion **542**, which is not surrounded by an upper end of lower pole section **520**. Uncovered portion **542** protrudes upwardly along the longitudinal axis such that it extends past an upper rim **545** of lower pole section **520**.

The discussion above has focused primarily on embodiments of the invention for use with lowering pole assemblies for industrial light poles. Other embodiments may be used with other types of elongate objects, or in other environments. It should be understood that the inventive concepts disclosed herein are capable of many modifications. Modifications and variations as would be apparent to a skilled addressee are deemed to be within the scope of the present invention.

Having described the invention, the following is claimed:

1. A joint for use in a lowering pole assembly, the lowering pole assembly including:

a lower pole section having an uppermost edge; and

an upper pole section having an internal surface, the upper pole section being moveable relative to the lower pole section,

the joint including:

a lower portion defining a first central wiring passage which is fixed relative to the lower pole section;

an upper portion defining a second central wiring passage which is fixed relative to the upper pole section, the second central wiring passage communicating with the first central wiring passage; and

an internal wiring tube communicating with the first central wiring passage and the second central wiring passage, the internal wiring tube extending inside the upper pole section, the internal wiring tube having an upper end located above the uppermost edge of the lower pole section, the internal wiring tube being parallel to and spaced from the internal surface of the upper pole section, the internal wiring tube having an overlap portion with the upper pole section such that the upper end of the internal wiring tube is located higher than a lower end of the upper pole section, the overlap portion providing a water flow resistance between the upper pole section and the internal wiring tube.

2. A joint for use in a lowering pole assembly as claimed in claim **1**, wherein the upper pole section is receivable inside a receiving sleeve.

3. A joint for use in a lowering pole assembly as claimed in claim **2**, wherein the receiving sleeve forms part of the lower pole section.

4. A joint for use in a lowering pole assembly as claimed in claim **2**, wherein the receiving sleeve is connected to the upper portion of the joint.

5. A joint for use in a lowering pole assembly as claimed claim **2**, wherein the internal wiring tube includes a first end that protrudes from an open end of the receiving sleeve along the longitudinal axis.

6. A joint for use in a lowering pole assembly as claimed in claim **5**, wherein the upper pole section is rotationally coupled to the lower pole section about an axis of rotation, and wherein the axis of rotation intersects the first wiring passage and the second wiring passage.

7. A joint for use in a lowering pole assembly as claimed in claim **5**, wherein the upper pole section is rotationally coupled to the lower pole section about an axis of rotation, and wherein the axis of rotation is coaxial with the first wiring passage and the second wiring passage.

8. A joint for use in a lowering pole assembly as claimed in claim **1**, wherein at least one of the lower portion of the joint and the upper portion of the joint includes a junction box module.

9. A joint for use in a lowering pole assembly as claimed in claim **1**, wherein the lower portion and the upper portion each include a pole adaptor mounted at an operative angle to the axis of rotation.

10. A joint for use in a lowering pole assembly as claimed in claim **9**, wherein each pole adaptor is substantially cylindrical and the longitudinal axis of the cylindrical pole adaptor of the lower joint portion and the longitudinal axis of the cylindrical pole adaptor of the upper joint portion are coaxial or offset.

11. A joint for use in a lowering pole assembly, the lowering pole assembly including:

a lower pole section and

an upper pole section having an internal surface, the upper pole section being moveable relative to the lower pole section,

the joint including:

a lower portion defining a first central wiring passage which is fixed relative to the lower pole section;

an upper portion defining a second central wiring passage which is fixed relative to the upper pole section, the second central wiring passage communicating with the first central wiring passage; and

an internal wiring tube communicating with the first central wiring passage and the second central wiring passage, the internal wiring tube being parallel to the upper pole section, the internal wiring tube having an overlap portion with the upper pole section formed by an annular space between the internal surface of upper pole section and the internal wiring tube, the overlap portion providing a water flow resistance between the upper pole section and the internal wiring tube.

* * * * *