UNITED STATES PATENT AND TRADEMARK OFFICE

BEFORE THE PATENT TRIAL AND APPEAL BOARD

SAMSUNG ELECTRONICS CO., LTD.;
SAMSUNG ELECTRONICS AMERICA, INC.,

Petitioners,

v.

SLYDE ANALYTICS, LLC,

Patent Owner.

Patent No. 8,588,033
Filing Date: September 28, 2012
Issue Date: November 19, 2013

Inventors: Pascal Pozzo Di Borgo and Jorg Hysek
Title: WRISTWATCH WITH ELECTRONIC DISPLAY

DECLARATION OF THOMAS BLACKADAR

Case No. IPR2024-00006

I, Thomas Blackadar, declare as follows:

I. BACKGROUND AND QUALIFICATIONS

1. A copy of my curriculum vitae that summarizes my education, work history, and publications, is attached to this declaration as **Exhibit A**.

2. I have a Bachelors of Science in Electrical Engineering with a full concentration in computer science (10 courses), and a concentration in History (5 courses). In my first professional job, I was employed as a manufacturing test engineer for Bolt Beranek and Newman in Cambridge, MA (BBN). I designed manufacturing fixtures, developed test software and systems test software for the products BBN produced. The products included: Fault tolerant parallel processing computers, internetworking computers (for the then Arpa/Darpa network), network diagnostic equipment and a bit-mapped graphical terminal (unique at that time) and an optimized 32 bit C-computer optimized for the c-programming language. I performed electrical designs, software designs to support all of these products through the manufacturing processes.

3. After three years on the manufacturing floor, I was recruited by the research labs of BBN to start a systems group for their new parallel processing group. In this group I performed custom VLSI designs for the switching fabric, circuit card designs for the switching fabric and designed the system architecture for this computer complete with Input and output devices and a full diagnostic and software

loading console using the Apple Macintosh 128k version. In 1985 we built the world's fastest parallel processor.

4. In 1991 this product line along with many of the engineers was sold to Cisco Systems for their high-speed router and network switching business. I was asked to stay at BBN Laboratories and re-build the advanced networking group, under Steven Blumenthal and Frank Heart. I took over Thad Starner's projects in wearable computing, as he returned to MIT to get his PhD at the MIT Media Lab being run by Nicholas Negroponte. My group took on many projects, and obtained funding from Darpa. Our projects were:

- Personal Status Monitor 1992
    - Wearable sensors for heart rate, activity, military GPS, and hardened tablet computer
- Advanced Communications Satellite https://en.wikipedia.org/wiki/ACTS_Gigabit_Satellite_Network#:~:text=The%20Advanced%20Communications%20Technology%20Satellite,622%20Mbit%2Fs%2C%20over%20NASA's
    - The fastest point to point, and point to multipoint full-duplex 622 Mbits/sec communications link.
- BodyLan personal area network 1994
    - The first low power body-area-network for networking sensors around the body and in one's personal space.
- Personal Inertial Navigation System 1995
    - A wearable system designed to track personal location from a known starting point through free space walking/running without the aid of GPS, or other wireless location technologies. This included moving maps of persons against a building schematic as the map.
- Tactical Information Assistant 1995
    - Soldier wearable system using GPS, Heartrate core body temperature and activity combined with personal networking hubs and a "palm

pilot" display, (where Palm Pilot was just coming into the commercial marketplace). The devices all connected to the squad leaders radio (Leprachan) and all data sent back to the next level up. The display was configured to show each member of the squad where the other members were and their vital signs. The display used was an advanced Cholesteric liquid crystal display (CHLC) by Kent Displays. This was used in 1994 by BBN through our DARPA contract. https://www.kentdisplays.com/chlcd.

5. BBN was sold to GTE in 1997 where I choose to start my own wearable devices company. The company was originally called Personal Electronic Devices, and subsequently changed its' name to FitSense Technology.

6. From the sale of BBN I picked up several of the wearable Army contracts from BBN to bring them to completion and through trials. We also started developing consumer products using the then best practices. With Reebok as a customer we had developed a very accurate pedometer and we worked closely with Reebox ui/Ux developers on an interface for children, where we developed several games and events for the children to choose from. The target age group was 6-12 years old. We sold 2 million in just over 18 months.

7. In 1998 I worked with Nike, ISA (French watch company) to develop a classic watch with LCD display and ultra-low power wireless network with remote sensors.

8. FitSense Technology further developed the first speed-distance monitor with heart rate for fitness enthusiasts. They watch connected to the internet through

internet connected personal computers to our web-server farm at that time. The display was a custom LCD display with a back-light for use in low lighting. The display displayed pace, speed, heart rate, caloric burn and time, with a lap count capability. This was released in December 2000. The watch was ergonomically designed such that one did not have to turn one's wrist while running to glance at the display.

9. In 1999 we worked with NASA/Yale to perform physiological monitoring on their members of the MT. Everest expedition. We worked with the hikers to design the system that would be non-evasive required minimal battery change out and provided full connectivity from Mt. Everest Basecamp II to the Sumit and through satellite to Internet II (at that time). We provide basecamp and viewers at home with a full moving map of the hikers' physiological status, and location.

10. In 2004 we presented to Nike a concept for the Nike plus shoe and product line. We worked with Apple and Nike over the next two years to produce multiple watches, networking devices and worked with Tony Fidel's iPod team to integrate the speed distance sensor into Nikes product suite. The display technology at this time was primarily custom LCD displays. We architected and built several watches for Nike.

11. In 2004 we partnered up with Dr. Steven Raymon and PHT corp to do ePRO clinical trials with a palm pilot, wireless activity monitors, wireless weight

scales, wireless spirometers and we enabled the palm pilot with a low power wireless network. We worked extensively with the UI/UX group to ensure that the data and data visualization would become a barrier for the clinical trials.

12. In 2008 I merged FitSense Technology with FitLinxx Inc. We were producing employee wellness programs, and wireless fitness equipment with user feed-back for health clubs. Using WinCE computers I remained chief technical officer and drove the requirements for the designs and implementations.

13. In 2016 we sold the company to a medical device manufacturer and I chose to work with startups with a vision. One such company was Anglr Labs. We developed and deployed an complete system for tracking you fishing experience. I established the system architecture, established electrical and software designs, hired the implementation team, established the manufacturing facility and worked with the manufacturing team to establish a 15 dollar x factory cost for the sensor. Our platform consisted of two sensors, a mobile device, an Azure software platform and our own server-farm in Pennsylvania. We utilized professional fishermen, weekend fishermen to collect all of our UI/UX requirements to ensure the application would exceed the manual implementations of the competitors in the market.

14. In 2018, I was recruited by Third Pole in Waltham, MA to become Principal systems engineer for the development of a nitric oxide generator. This system consisted of a fully functional graphical display; a fault tolerant Nitric Oxide

generator, external communications and complete gas flow control system and monitor. We worked with nurses, neo-natal units in hospital to define the graphical and control systems for ease of use. We delivered 4 units approved with an FDA IDE clearance for human testing in 2021. My job duties included simulation, software and firmware development, component selection and building a strong team.

15. In June of 2021, I was recruited heavily to join a startup developing a new wearable sensor that measured core body temperature 24x7 in a cost-effective disposable package. We used as our interface and data transport mobile devices. The application was extensively tested first with Figma demos. We used Doctors and Nurses at first, then we started our formative studies with humans in our target treatment range (Oncology patients; these patients are typically > 40 years old). We got FDA clearance August 2023, and the product is in market. I was employee 2 and was responsible for establishing the medical device quality system, full end-to-end architecture, electronic design, mobile app design, back-end, and clinician portal. I've written firmware, mobile app software and debugged the back-end software with the systems architect I hired.

16. As of June 1 2024, I have retired from everyday management and work at Aion Biosystems. I still consult for them as needed but to-date have not done anything other than provide location of our documents in the quality system.

17. I have prepared this Declaration as an expert witness retained by Slyde Analytics, LLC. In this Declaration, I provide my opinions as to whether the Challenged Claims of U.S. Patent No. 8,588,033 (the "'033 Patent") are valid. I provide technical bases for these opinions as appropriate.

18. This Declaration contains statements of my opinions formed to date and the bases and reasons for those opinions. I may offer additional opinions based on further review of the materials in this proceeding, including opinions and/or testimony of other expert witnesses.

19. My time in this matter is being compensated at a customary rate of $625 per hour. My compensation is not dependent upon the substance of the opinions I offer herein, the outcome of this proceeding, or any issues involved in or related the '033 patent. I have no financial interest in, or affiliation with, any of the real parties in interest or the patent owner.

II. MATERIALS CONSIDERED

20. The materials I considered include the '033 patent and the prosecution history for the '033 Patent. I also considered the materials that I refer to and that I cite in this declaration.

21. I also considered all papers and exhibits filed in IPR2024-00006 including the petition and the declaration of Benjamin Bederson.

22. I have also considered the Board's Decision on Institution (IPR2024-

00006, Paper 13) in this proceeding.

23. I have also considered any exhibits attached to the Patent Owner's Response in this proceeding.

24. In addition, I have drawn on my experience and knowledge, as discussed above and described more fully in my CV.

III. LEGAL PRINCIPLES

25. I understand that a patent claim is unpatentable as "obvious" if the subject matter of the claim as a whole would have been obvious to a person of ordinary skill in the art as of the time of the invention at issue.

26. I understand that the use of the "person of ordinary skill" rubric is to prevent one from improperly, in the present day, using hindsight to decide whether a claim is obvious.

27. I understand that the following factors must be evaluated to determine whether the claimed subject matter is obvious: (1) the scope and content of the prior art; (2) the difference or differences, if any, between the scope of the patent claim and the scope of the prior art; and (3) the level of ordinary skill in the art at the time of the invention.

28. I understand that, unlike anticipation, which allows consideration of only one item of prior art, obviousness may be shown by considering more than one item of prior art. I understand that, when considering a combination of prior art

references as part of an obviousness analysis, it can be important to ascertain if the references are from the same field of endeavor and also to ascertain whether there is any reason that would have prompted a person of ordinary skill in the relevant art to combine the elements in the way the claim does. In other words, a claim generally cannot be rendered obvious by combining (i) art from across different fields, including outside the field of the claimed invention, or (ii) art that itself teaches away from combination with other art that would otherwise provide its missing limitations, or (iii) art for which there is not at least an articulable, common sense reason to bridge the gap between its disclosure and the claim at issue.

29. Moreover, I understand that so-called "objective indicia of nonobviousness," also known as "secondary considerations," are also to be considered when assessing obviousness. I understand that this objective evidence includes at least: the commercial success of the invention; the long felt but unresolved need to develop the invention; any praise of the invention in the market; and copying by others. I also understand that evidence of objective indicia of non-obviousness must be commensurate in scope with the claimed subject matter; *i.e.*, that there must be a nexus or connection between the criteria and the claim itself.

30. I understand that the disclosure of an asserted prior art reference must provide an enabling disclosure of the desired subject matter and that mere naming or description of the subject matter is insufficient; to be enabling, I understand that

it must be able to be produced without undue experimentation.

31. I understand that I must construe a claim in accordance with the ordinary and customary meaning of such claim as understood by one of ordinary skill in the art and consistent with the prosecution history pertaining to the patent.

IV. CLAIM CONSTRUCTION

32. I understand that I must construe a claim in accordance with the ordinary and customary meaning of such claim as understood by one of ordinary skill in the art and consistent with the prosecution history pertaining to the patent.

33. I have been informed by Counsel that, for purposes of my analysis in this *inter partes* review proceeding, claim terms should be given their ordinary and customary meaning within the context of the patent in which the terms are used, *i.e.*, the meaning that the term would have to a person of ordinary skill in the art in question at the time of the invention in light of what the patent teaches, unless it appears that the inventors were using them to mean something else. Additionally, the specification and prosecution history must be consulted to confirm whether the patentee has acted as his/her own lexicographer (*i.e.*, provided special meaning to any disputed terms), or intentionally disclaimed, disavowed, or surrendered any claim scope).

34. I have further been informed by Counsel that a person of ordinary skill in the art is deemed to read a claim term not only in the context of the particular

claim in which the disputed term appears, but also in the context of the entire patent, including the specification and the prosecution history. The prosecution file history provides evidence of how both the Patent Office and the inventors understood the terms of the patent, particularly in light of what was known in the prior art. Further, where the specification describes a claim term broadly, arguments and amendments made during prosecution may require a more narrow interpretation. For these reasons, the words of the claim must be interpreted in view of, and be consistent with, the entire specification. The specification is the primary basis for construing the claims and provides a safeguard such that correct constructions closely align with the specification. Ultimately, the interpretation to be given a term can only be determined and confirmed with a full understanding of what the inventors actually invented and intended to envelop with the claim as set forth in the patent itself.

35. I have further been informed by Counsel that, to determine how a person of ordinary skill would understand a claim term, one should look to those sources available that show what a person of skill in the art would have understood disputed claim language to mean. Such sources include the words of the claims themselves, the remainder of the patent's specification, the prosecution history of the patent (all considered "intrinsic" evidence), and "extrinsic" evidence concerning relevant scientific principles, the meaning of technical terms, and the state of the art. I understand that one looks primarily to the intrinsic patent evidence, but extrinsic

evidence may also be useful in interpreting patent claims when the intrinsic evidence itself is insufficient. Additionally, the context in which a term is used in the Asserted Claims can be highly instructive. Likewise, other claims of the patent in question, both asserted and not asserted, can inform the meaning of a claim term. For example, because claim terms are normally used consistently throughout the patent, the usage of a term in one claim can often illuminate the meaning of the same term in other claims. Differences among claims can also be a useful guide in understanding the meaning of particular claim terms.

36. I have further been informed by Counsel that, while intrinsic evidence is of primary importance, extrinsic evidence, *e.g.*, all evidence external to the patent and prosecution history, including expert and inventor testimony, dictionaries, and learned treatises, can also be considered. For example, technical dictionaries may help one better understand the underlying technology and the way in which one of skill in the art might use the claim terms. Extrinsic evidence should not be considered, however, divorced from the context of the intrinsic evidence. Evidence beyond the patent specification, prosecution history, and other claims in the patent should not be relied upon unless the claim language is ambiguous in light of these intrinsic sources. Furthermore, while extrinsic evidence can shed useful light on the relevant art, it is less significant than the intrinsic record in determining the legally operative meaning of claim language.

37. I understand that a patent claim may be expressed using functional language. 35 U.S.C. § 112 ¶ 6 provides that a structure may be claimed as a "means . . . for performing a specified function" and that an act may be claimed as a "step for performing a specified function." There is a rebuttable presumption that § 112 ¶ 6 applies when the claim language includes "means" or "step for" terms, and that it does not apply in the absence of those terms. The presumption stands or falls according to whether one of ordinary skill in the art would understand the claim with the functional language, in the context of the entire specification, to denote sufficiently definite structure or acts for performing the function.

38. When it applies, § 112 ¶ 6 limits the scope of the functional term to only the structure, materials, or acts described in the specification as corresponding to the claimed function and equivalents thereof. Construing a means-plus-function limitation involves multiple steps. The first step is a determination of the claimed function of the means-plus function limitation. The next step is to determine the corresponding structure disclosed in the specification and equivalents thereof. A structure disclosed in the specification is "corresponding" structure only if the specification or prosecution history clearly links or associates that structure to the function recited in the claim. The focus of the "corresponding structure" inquiry is not merely whether a structure is capable of performing the recited function, but rather whether the corresponding structure is clearly linked or associated with the

recited function. The corresponding structure must include all structure that actually performs the recited function. However, § 112 ¶ 6 does not permit incorporation of structure from the written description beyond that necessary to perform the claimed function.

39. For § 112 ¶ 6 limitations implemented by a programmed general purpose computer or microprocessor, the corresponding structure described in the patent specification must include an algorithm for performing the function. The corresponding structure is not a general purpose computer but rather the special purpose computer programmed to perform the disclosed algorithm.

40. In my opinion, claim construction is not required to resolve the issues of this proceeding.

V. LEVEL OF ORDINARY SKILL IN THE ART

41. I understand that I should perform my analysis from the viewpoint of a person of ordinary skill in the art ("POSITA"). I understand that this hypothetical person of ordinary skill in the art is considered to have the normal skills of a person in a certain technical field. I understand that factors that may be considered in determining the level of ordinary skill in the art include: (1) the education level of the inventor; (2) the types of problems encountered in the art; (3) the prior art solutions to those problems; (4) rapidity with which innovations are made; (5) the sophistication of the technology; and (6) the education level of active workers in the

field.

42. In my opinion, a POSITA would have had a bachelor's degree in electrical engineering, computer science, computer engineering, or a related field, and 5-6 years of experience in the research, design, development, or testing of touchscreen applications and graphical user interfaces ***for small wearables***, with additional education substituting for experience and vice-versa.

43. My qualifications and experience exceed those of a person of ordinary skill in the art. Nonetheless, my analysis and opinions herein regarding the '041 patent are given from the perspective of a person of ordinary skill in the art.

44. I disagree with Petitioner's proposed level of skill in the art of "a bachelor's degree in electrical engineering, computer science, computer engineering, or a related field, and 2-3 years of experience in the research, design, development, or testing of touchscreen applications and graphical user interfaces ***for mobile devices***, with additional education substituting for experience and vice-versa." Pet. at 7.

45. I note that, under Petitioner's proposal, 2-3 years of experience with testing touchscreen apps and GUIs for mobile devices, would not provide a person with ordinary skill in the art to work with wristwatches having such features because, based on my experience, wearable devices in 2010 (the priority date of the '033 Patent) were programmed primarily using bare-metal-embedded code. On the other

hand, mobile devices had full mobile operating systems such as Android and iOS. These devices ran multi-threaded software to implement the functionality. Bare-metal-embedded code (without any OS) must incorporate similar functionality with far less software and hardware resources. For example, the largest component of power consumption in wearable devices is external communications, if necessary, and the display and the processing required to do its required functions. Compressing data structures, the use of RAM, flash memory, and static memory are all considerations for wristwatches but were not large concerns of the mobile device development environments of the time. As a point of reference, industry leaders Google (Android), Samsung, and Apple, developed separate wearable operating systems from its mobile device operating systems to address the deficiencies of bare-metal-embedded firmware. Specifically, these were Google Android Wear in 2012,[1] Samsung Tizen in 2014,[2] and Apple Watch OS in 2015,[3] all of which were developed years after the invention of the '033 Patent. At the time of the invention of the '033 Patent, developers only had several small footprint real time operating systems available to them. Specifically, TinyOS, a free BSD licensed real time Unix that had been developed for over 11 years, targeted low resource devices. Ex. 2005, available at http://www.tinyos.net/; Ex. 2006, available at

[1] Ex. 2010, available at https://en.wikipedia.org/wiki/Wear_OS
[2] Ex. 2011, available at https://en.wikipedia.org/wiki/Tizen
[3] Ex. 2012, available at https://en.wikipedia.org/wiki/WatchOS

https://en.wikipedia.org/wiki/TinyOS. Ex. 2007, available at https://www.usenix.org/system/files/conference/osdi12/osdi12-final-183.pdf. However the largest draw on the operating systems was the RAM and storage in microcontrollers, which made it impractical to embed such an OS into a watch. As Philip Levis describes, a POSITA would have known that TinyOS would have to be customized to an inordinate extent to fit into a watch processor. Ex. 2007.

46. Thus, in my opinion, defining a POSITA as one having 2-3 years of experience with design, development, and testing experience with mobile devices is incorrect since, in 2010, the processes and considerations for the claimed wristwatches were considerably different.

VI. PETITIONER FAILS TO RENDER CLAIMS 1-19 OBVIOUS

A. Ground 1: Claims 1 and 11-14 are Not Obvious Over the Combination of Mooring in View of Satoshi

1. A Person of Ordinary Skill in the Art Would Not Be Motivated to Combine Wristwatch Embodiments with Embodiments Specific to Mobile Devices or Larger Devices

47. In my opinion, a POSITA would not be motivated to combine Mooring and Satoshi to teach the claimed invention at least because a POSITA would not combine a reference disclosing processors for a mobile phone application with a reference related to wristwatches to teach a wristwatch microcontroller at the time of the invention of the ’033 Patent. Section VI.A.1(a).

48. For example, I understand that Satoshi is not directed to wristwatches

and focuses exclusively on an animation application of a mobile phone. Ex. 1007, [0004] ("a program for displaying an animation of interactively operable gears of any number for mobile phone users to arrange and display in a plurality of combinations").

49. In my opinion, Petitioner's expert's rationale for a POSITA's motivation to combine a reference for ***mobile phone applications*** with a wristwatch reference to teach the claimed wristwatch is flawed because Dr. Bederson incorrectly assumes that, at the time of the invention of the '033 Patent, there was such a thing as "standard microprocessors" and "standard LCD screens" that "are interchangeable" between wristwatches and mobile devices. Pet. at 25 (citing Ex. 1002, ¶¶ 57-63, 64-68, 130). Not only is this statement incorrect, but Petitioner's citations to Dr. Bederson's declaration do not stand for that proposition, as I describe below.

(a) Dr. Bederson's Claim that Wristwatch and Mobile Device Microcontrollers for Mechanical Simulation are Interchangeable is Unsupported

50. As I note directly above, Petitioner relies on several paragraphs of Dr. Bederson's declaration for the proposition that microprocessors were interchangeable between wristwatches and mobile devices. Pet. at 25.

51. First, Ex. 1002, ¶¶ 57-63 merely shows that at the time of the invention, wristwatches could have basic touchscreens.

52. Second, Ex. 1002, ¶¶ 64-68 shows that "by the mid-2000s that one could simulate and display various mechanical designs and processes on a digital interface using computer-aided design (CAD) tools" and that "[m]any of these simulations were even made available to the public in online databases." Ex. 1002, ¶ 64. However, these paragraphs do not (and cannot) show that such simulations of watch components were ***on a wristwatch itself***, which would not nearly have enough computing power to support CAD tools or online access to public databases.

53. Third, Ex. 1002, ¶ 130 is merely a conclusory statement that "[a] POSITA would have had a reasonable expectation of success in combining Mooring and Satoshi because they would have understood that different watch or clock format displays are interchangeable and both use similar conventional processors and displays" with no further citations or evidentiary support. This blanket statement is wrong, as I describe below.

(b) Dr. Bederson's Claim that Wristwatch and Mobile Device Microcontrollers for Mechanical Simulation are Interchangeable is Incorrect

54. I understand that the '033 Patent describes and aims to solve the problem that, at the time of the invention, microcontrollers for wristwatches could not be compared to or combined with microcontrollers for mobile phones or other larger computing devices because of the size and power consumption limitations that are particular to wristwatches.

> The invention is also based on the observation that the computational power of the current watch microcontrollers (i.e. of microcontrollers of a size and with a power consumption compatible with a watchmaking application) enables a realistic simulation of a complex mechanical movement to be calculated and displayed in real time.

'033 Patent, 2:53-58.

55. As I note above, the mobile devices at the time of the invention, and the state of the art in low power silicon microcontrollers and support chips such as the display controllers, the display technology available required separate engineering talent and expertise. Section V. Application developers for tablets, mobile devices, and personal computers all had multiple tools available to them to develop their applications. The developers of watches had no such assistance in the operating systems, and most of these implementations were unique implementations, such as Tiny OS. For further example, there were several large watch companies such as Seiko and Timex that provided the first application-like environment for watches in the late 1980s and 1990s. Ex. 2008, available at https://en.wikipedia.org/wiki/Timex_Datalink; Ex. 2009, available at https://en.wikipedia.org/wiki/File:Seiko_Data-2000,_The_First_Computer_Watch,_Circa_1983-1984,_LCD_Watch_with_Docking_Station_(8515983575).jpg. However, these watches were forced to leverage a personal computer and a serial interface, as in the

Seiko Data-2000 and an optical interface in the Timex Datalink. Ex. 2008; Ex. 2009.

56. In my opinion, a POSITA would have understood that even the disclosure of Satoshi admits that Satoshi was very concerned about the computational resources available for its application, in view of current mobile phones at the time of Satoshi:

> However, current mobile phones are in demand that enable long-time usage as a phone using the limited power of a battery and that are compact and lightweight, and there are hardware limits such as memory storage capacity and the processing capability of an arithmetic processing device, and Java for embedded devices used in mobile phones is set such that only limited arithmetic processing can be executed depending on the hardware mentioned above.

Ex. 1007, [0005].

57. In my opinion, a POSITA would have further understood that Satoshi aimed to resolve this issue by relying upon an Internet connection.

> The present applicants set out to develop, as content provided on a mobile phone having an internet connection environment, a program for displaying an animation of interactively operable gears of any number for mobile phone users to arrange and display in a plurality of combinations.

Ex. 1007, [0004]. Further, in my opinion, a POSITA would have understood that Satoshi moved components of its Java applet to the internet when his java applet needed more memory, and therefore, the code size of such a Java implementation would be enormous. Given the constraints of wristwatches at the time of the ’033

Patent in 2010, I understand, based on my experience, that a POSITA would have realized that a Java implementation utilizing the Internet as memory to "display[] an animation of interactively operable gears of any number for mobile phone users" would be impossible. Ex. 1007, [0004].

58. I note that Petitioner presents no evidence (and ignores any discussion) that a POSITA would reasonably succeed in combining Mooring and Satoshi in view of the differing size and power capabilities of microcontrollers between mobile phones and wristwatches as of the date of the '033 Patent invention. Pet. at 23-25.

59. For at least these reasons, in my opinion, a POSITA would not have had a motivation to combine Mooring and Satoshi to teach a wristwatch microcontroller, let alone a reasonable expectation of success from combining Mooring and Satoshi to teach a wristwatch microcontroller that performs all the limitations of the '033 Patent claims.

2. The Petition Does Not Show that the Combination of Mooring in View of Satoshi Discloses "*a microcontroller being arranged for reproducing on said electronic display the simulation of a mechanical watch movement comprising a gear train, said simulation being visible so as to indicate the time, said microcontroller being further arranged for synchronizing the displayed time by said displayed mechanical movement with that of said quartz oscillator*," as Required by Claim Element 1[d]

(a) Mooring Does Not Disclose "*a microcontroller being arranged for reproducing on said electronic display the simulation of a mechanical watch movement*," as Required by Claim Element 1[d]

60. In my opinion, a POSITA would have understood that Mooring does not disclose any "simulation of a mechanical watch movement," as Petitioner argues. Pet. at 30.

61. I understand that Mooring discloses that "[e]xamples of an electronic movement may include a quartz movement with an analog or digital display." Ex. 1005, [0039].

62. In my opinion, Dr. Bederson's understanding of an analog display as a simulation of any kind is incorrect because a POSITA would have understood that there is a distinction between an analog time display and a digital time display, and Mooring explains this distinction. A POSITA would therefore have understood Paragraph [0039] of Mooring in light of the rest of Mooring's disclosure:

> Quartz movements may be automatic (a self-winding rotor mechanism) or battery powered. The majority of watches made today are equipped with electronic movements that feature an analog time display having rotating hands on a face or dial. Some watches may have both analog and digital time readouts for simultaneous display of different information.

Ex. 1005, [0003]. In my opinion, a POSITA would therefore understand that an analog time display is described as having physical rotating hands on a face or dial while a digital time display is described as a time readout (i.e., showing a numerical representation of time.).

63. I note that, without considering this pertinent portion of Mooring, the

Board accepted the testimony of Dr. Bederson about what a POSITA would have understood based on one paragraph [0039] of Mooring. Paper No. 13, at 20 (citing Ex. 1002, ¶ 150) ("Mooring describes an embodiment that includes an analog display, in which the microcontroller displays on the touchscreen a simulation of the movement of hour and minute hands to indicate the time.").

64. In view of the explicit disclosure of Mooring, it is my opinion that a POSITA would have understood that an analog time display of hour and minute hands is an actual mechanical movement, and not a simulation, regardless of the "examples of an electronic movement" disclosed in Paragraph [0039] of Mooring.

(b) Satoshi Does Not Disclose the Claimed "*said microcontroller being further arranged for synchronizing the displayed time by said displayed [simulation of a] mechanical movement with that of said quartz oscillator*," as Required by Claim Element 1[d]

65. In my opinion, a POSITA would understand that Satoshi does not teach "***said microcontroller [is] further arranged for synchronizing.***" I note that Satoshi only teaches that synchronization is done through manual user action and involvement. As Petitioner admits, "Satoshi further teaches that ***the user can request*** to set the watch hands to "the current time . . . read from the clock function of the mobile phone." Pet. at 36 (citing Ex. 1007, ¶ 87); Ex. 1002, ¶ 159 ("***the user request taught in Satoshi would synchronize*** the time displayed by the watch hands"). In my opinion, Petitioner and Petitioner's expert mislead the Board when they fail to

note Satoshi's further description of this "user [] request." In the very same paragraph cited by Petitioner, I note that Satoshi describes that a user ***manually*** adjusts the angles for the hour hand, minute hand, and second hand, to match the mobile phone's clock function:

> That is, ***based on an operation by the user***, the current time can be read from the clock function of the mobile phone 1, and corresponding to the hour, minute, and second that was read, ***a process is performed in which the hour hand 9a, the minute hand 9b, and the second hand 9c are respectively set to an angle*** for the current hour, an angle for the current minute, and an angle for the current second (steps S23, 24, and 25). Furthermore, each change operation can be repeated, but by operating the set key, the angles of the hands 9 are fixed and the process ends (step S26).

Ex. 1007, [0087] (emphasis added).

66. I note that the Board focuses its analysis on this paragraph alone and assumes that "based upon our understanding of the English language translation of Satoshi (Ex. 1007), we understand paragraph 87 as describing the user can set the clock time based upon the clock function of the mobile phone ***by operating the set key***." Paper No. 13, at 25. In other words, the Board seems to have found that "this user-initiated action [of operating the set key] involves the microprocessor executing code to perform the synchronization." Paper No. 13, at 25.

67. In my opinion, the Board ignores the paragraph that immediately follows, which describes that a user enters an "editing mode," where the user rotates

the hands to match the phone clock time. After the editing mode, the rotation of the hands recommences in execution mode. Satoshi's disclosure even notes that there "may be ***a long time***" or "***a big difference*** between a time when the editing mode is opened and a time on the clock when the hands 9 are adjusted," and therefore "angles of the hands 9 when changed ***will not match*** the time when the editing mode was opened, and the time cannot be set accurately." Ex. 1007, [0088]. In my opinion, a POSITA would understand that this "difference" is precisely because of delay between the user actions involved during editing mode and execution mode when the hands start rotating again:

> Note that when a time display is enabled using the hand 9a, the minute hand 9b, and the second hand 9c, in editing mode, editing is performed with rotation of the gears 7 in a stopped state (a state upon opening the editing mode in which rotation of the hands 9 is stopped), the execution mode is returned to, rotation of the hands 9 recommences, and when drawing the hands 9, the hands 9 advance to the current time and are redrawn. However, upon opening the editing mode, the clock can actually be seen, and it ***may be a long time until the angles of the hands 9 change, there may be a big difference between a time when the editing mode is opened and a time on the clock when the hands 9 are adjusted***, and even if the angles of the hands 9 when the editing mode is opened while the execution mode is opened advance to angles of the hands 9 based on the current time, ***angles of the hands 9 when changed will not match the time when the editing mode was opened, and the time cannot be set accurately***.

Ex. 1007, [0088]. Therefore, I understand that any matching of time or synchronization between Satoshi's display's hands and gears and Satoshi's phone

clock is performed through user action and involvement during an editing mode instead of a microcontroller.

68. In my opinion, the Board's understanding of the "set key" is also flawed in view of the remaining disclosure of Satoshi. Satoshi mentions a user operating various set keys a total of 7 times in its disclosure. Ex. 1007. As shown below, a POSITA would have understood that a set key finalizes or "sets" various selections:

> Note that selection of menu items is performed by operating the tenkey, and selection of menu items is performed using a set key, which are prescribed keys that are predetermined for the key inputting part 4.

Ex. 1007, [0067].

> when a set key is operated, the gear 7 whose position was changed and the other gear 7 form a connected state.

Ex. 1007, [0073]

> Furthermore, each changing operation can be repeated, but when a set key is operated to set an arrangement (step S3), the process ends.

Ex. 1007, [0076]

> Each change operation can be repeated, but when a set key is operated, a color of a gear 7 is set and the process ends (step S11).

Ex. 1007, [0078].

> Furthermore, each change operation can be repeated, but when the user operates the set key, the color and shape of the hand 9 are fixed and the process ends (step S14).

Ex. 1007, [0082].

> Furthermore, the change operation can be repeated, but by operating the set key, the rotation rate is fixed and the process ends (step S20).

Ex. 1007, [0083].

69. Even with respect to Paragraph [0087] of Satoshi, which the Board and Petitioner rely on, it is my opinion that a POSITA would have understood that operating the set key results in a user definitively setting an angle for the current hour, minute, and second. Therefore, I understand that operating the set key means that the angles are fixed and the process ends. I note that Satoshi then cites to Step S26 in a flow chart, which indicates user actions that set the angles for the simulated clock hands. As the disclosure notes, it is possible for the user to conduct another "change operation" so as to change the angle of the hands.

> [The] process is performed in which the hour hand 9a, the minute hand 9b, and the second hand 9c are respectively set to an angle for the current hour, an angle for the current minute, and an angle for the current second (steps S23, 24, and 25). Furthermore, each change operation can be repeated, but by operating the set key, the angles of the hands 9 are fixed and the process ends (step S26).

Ex. 1007, [0087].

FIG. 10

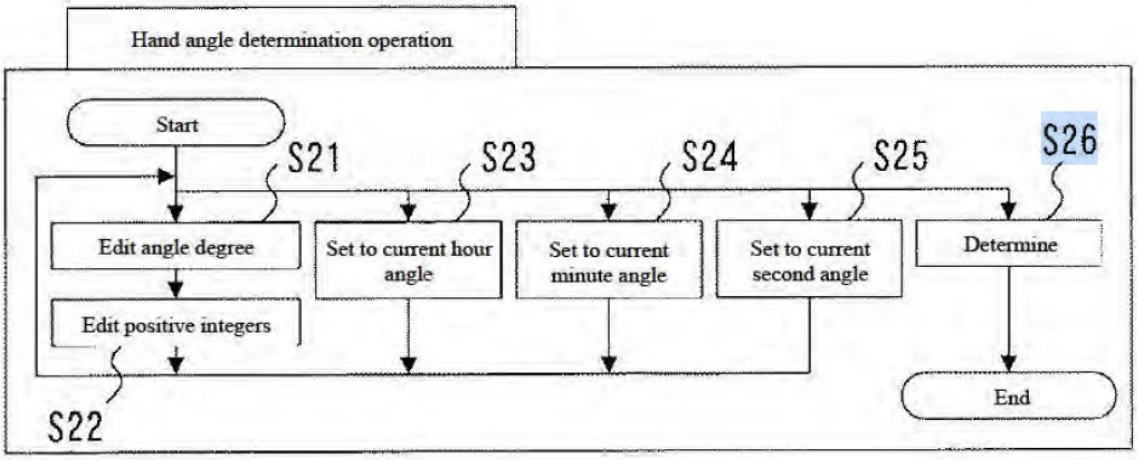

Ex. 1007, Fig. 10. In view of Satoshi's disclosure of Paragraph [0088] and of the user "operating a set key," it is my opinion that a POSITA would find it evident that it is a user directly, and not a microcontroller that performs "synchronizing the displayed time by said displayed [simulation of a] mechanical movement" with Satoshi's mobile phone clock.

3. The Combination of Mooring in View of Satoshi Does Not Render Claims 11-14 Obvious

70. I note that Claims 11-14 are dependent on Claim 1. Therefore, Claims 11-14 are not rendered obvious by the combination of Mooring in view of Satoshi for at least the same reasons as Claim 1.

4. The Combination of Mooring and Satoshi Does Not Render Obvious *"the wristwatch of claim 1, arranged for performing said synchronization periodically in an automatic manner,"* as Required by Claim 11

71. As I describe above in Section VI.A.2, the microcontroller of either

Mooring or Satoshi does not perform synchronization, let alone periodic synchronization. I note that the Petition cites to no relevant disclosure in Satoshi, other than the fact that a user, of his own volition, and recognizing that there will be inaccuracy over time, would manually perform a synchronization periodically. Pet. at 37 (citing Ex 1002, ¶¶165-166). A mere desire to keep accurate time does not amount to a disclosure in Satoshi, which explicitly describes that a user must manually synchronize in view of the discrepancy between the time a user reads from the clock function and the time that the user actually sets on the simulation. Ex. 1007, [0088] (indicating that there "may be ***a long time***" or "***a big difference*** between a time when the editing mode is opened and a time on the clock when the hands 9 are adjusted," and therefore "angles of the hands 9 when changed ***will not match*** the time when the editing mode was opened, and the time cannot be set accurately.").

72. I note that Petitioner's expert, Dr. Bederson, also admits that there is no "synchronization [] in an automatic manner," periodically or otherwise, as required by Claim 11. Ex. 2003, 42:20-43:3 ("I don't think I used the term 'automatic synchronization' because it would be at least in response to a user action.").

73. At best, it is my opinion that a POSITA could infer, from the disclosure of Satoshi, that a user may manually adjust the time on a periodic basis to match the actual clock function. However, I note that Claim 11 requires "said synchronization" is performed by the microcontroller automatically, and therefore the combination of

Mooring and Satoshi does not render this claim obvious.

5. The Combination of Mooring and Satoshi Does Not Render Obvious *"the wristwatch of claim 1, comprising means for entering and executing a request for said synchronization by the user*," as Required by Claim 12

74. I note that Satoshi does not disclose a way for a user to enter and execute a request for synchronization. Section VI.A.2(b). A user merely reads the time from a clock function and attempts to synchronize its manual adjustment of simulated mechanical components (hands, gears, etc.) to match that time from the clock function. Section VI.A.2(b). For example, it is my opinion that a POSITA would have looked for any disclosure of commands passed from the user to a microcontroller, but none exist in Satoshi. Ex. 1007. Moreover, I note that Petitioner's expert, Dr. Bederson, admitted that a user "directly interact[s] with the screen to adjust the time of the simulation.":

> Q Is it your understanding that Satoshi describes that a user can directly implement arranging gears and hands on a screen to match the desired time?
>
> A (Witness reviews document.)
> I address this issue about ***directly interacting with the screen to adjust the time of the simulation*** -- the time displayed by a simulation, in part, in my analysis of Ground 2. So, for example, in describing the '033 dependent Claim 2, I explain my opinion about a combination with prior art Lee where my paragraph 193 point to Figures 6 and 7 of Lee which directly support ***a user touching and moving a displayed hand on the screen to meet this limitation***. So for at least -- because I combined with Lee to show such a disclosure, ***I don't***

> ***recall specifically having an opinion one way or another about whether Satoshi discloses that.***

Ex. 2003, 50:3-22. In my opinion, a POSITA would understand that a user's direct interaction to synchronize time is not entering and executing a request.

6. The Combination of Mooring and Satoshi Does Not Render Obvious *"the wristwatch of claim 1, arranged for displaying said mechanical movement on the whole surface of the electronic display so as to occupy the position and the dimensions of a real mechanical movement*," as Required by Claim 13

75. I note that Claim 13 requires that the mechanical movement must be displayed on the whole surface of the electronic display. However, I also note that none of the embodiments of Satoshi disclose mechanical movements on the whole surface of the electronic display. As shown below, and admitted by Petitioner, Satoshi includes a "bar on top (showing the batter) and the bar on bottom (showing "Menu" and "Exit"). Pet. at 40.

FIG. 5

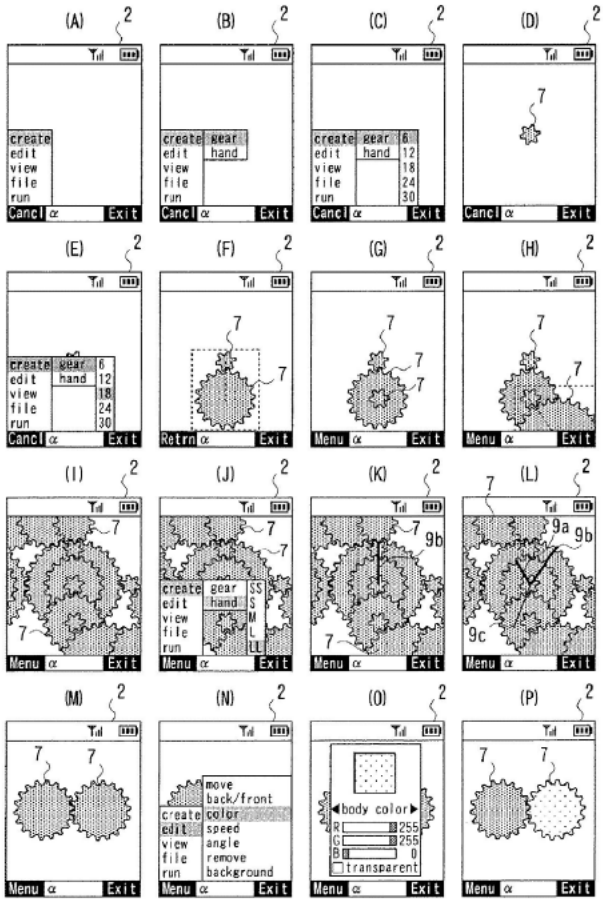

Ex. 1007, FIG. 5.

76. In my opinion, merely stating that it would have been obvious to a POSITA to omit the batter and Menu and Exit bars does not make it so. Pet. at 40 (citing Ex. 1002, ¶ 176). For example, a general desire to "make the clock hands and gear train larger and easier for users to see and to have fewer distractions (Ex. 1002, ¶ 176) does not change the technology and disclosure of Satoshi, which only discloses embodiments with a visible "Menu," "Exit," phone signal quality, and battery charge.

77. In my opinion, and based on my experience, a POSITA would have

understood that there is a simple reason why Satoshi does not disclose the claimed "***displaying said mechanical movement on the whole surface of the electronic display.***" Satoshi discloses a mobile device application that pulls mechanical elements from the Internet. Ex. 1007, [0003]. As described above, at the time of Satoshi, such applications drew a lot of power, even on mobile devices (let alone wristwatches) such that a user would need to be very cognizant of battery life. Section VI.A.1(b).

78. Moreover, I note that Satoshi explains that its application is meant to be adjustable whenever open (i.e., the Menu must always be available) so that "a user [can] arbitrarily arrange[] gears in a combination on a mobile terminal such as a mobile phone." Ex. 1007, [0037]. Like any other mobile device application, it is my opinion that a POSITA would understand that a user must also have the option to Exit the application, particularly when swipe movements to switch applications were not prevalent at the time of Satoshi.

B. Ground 2: Claims 2-3, 17, and 19 are Not Obvious Over the Combination of Mooring and Satoshi in Further View of Lee

79. I note that Claims 2-3 are dependent on Claim 1 and are therefore not rendered obvious by Mooring and Satoshi in further view of Lee for at least the same reasons as Claim 1 noted for Ground 1.

80. I note that Claims 17 is not rendered obvious by Mooring and Satoshi in further view of Lee for at least the same reasons as noted for Ground 1, on which

Petitioner's Ground 2 relies.

81. I note that Claim 19 is dependent on Claim 17 and is therefore not rendered obvious by Mooring and Satoshi in further view of Lee for at least the same reasons as Claim 17.

C. Ground 3: Claims 13-16 are Not Obvious Over the Combination of Mooring and Satoshi in Further View of Louch

1. The Combination of Mooring, Satoshi, and Louch Does Not Render Obvious Claims 13-16

82. I note that Claims 13-15 are dependent on Claim 1. Therefore, Claims 13-15 are not rendered obvious by Mooring and Satoshi in further view of Louch for at least the same reasons as Claim 1 noted for Ground 1 on which Petitioner's Ground 3 relies.

83. I note that Claim 16 is an independent claim, which is not rendered obvious by Mooring and Satoshi in further view of Louch, for at least the same reasons as noted for Ground 1 on which Petitioner's Ground 3 relies, and for the further reasons I note below.

2. The Combination of Mooring, Satoshi, and Louch Does Not Render Obvious *"the microcontroller being specifically arranged for interpreting signals from the touch sensor, for selecting one screen from among several available screens depending on these signals, and for displaying this screen on the entirety of said display, said microcontroller being further specifically arranged so as to cause screens to scroll by in order to replace durably the screen displayed initially by another screen,"* as Required by Claim Elements 15[a] and 15[b] or

"*said microcontroller being further arranged for interpreting signals from the touch sensor, for selecting one screen from among several available screens depending on these signals, and for displaying this screen on the entirety of said display, said microcontroller being further specifically arranged so as to cause screens to scroll by in order to replace durably the screen displayed initially by another screen*" as Required by Claim Elements 16[f] and 16[g]

84. It is my understanding that these claim limitations of Claims 15 and 16 require that a microcontroller can interpret touch sensor signals for selecting a screen among many screens. The selected screen will be displayed on the entirety of the display. The selecting of a screen is performed by "caus[ing] screens to scroll by" so that the user can make a selection that will replace the previous screen, and therefore, the new selection will also be displayed on the entirety of the display.

85. I note that these claim limitations, though slightly differently worded, were considered by this same Board in IPR2024-00002 under the same prior art reference Louch. Specifically, I understand that the Board noted that Claim 1 of the '922 Patent (which has the same inventors as the '033 Patent) in that proceeding required "lastingly replace the initially displayed card with a replacement card," "wherein the size of the image corresponds to the size of said digital matrix display so that the displayed card occupies the whole of said digital matrix display," and "wherein one card of said several available cards and occupying the entire digital matrix display is … replaced after the scrolling by a different card of said several available cards that occupies the entire digital matrix display." *Samsung Elecs. Co.*

et al. v. Slyde Analytics LLC, IPR2024-00002, Paper No. 13 (Decision Denying Institution of Inter Partes Review), at 12 (April 5, 2024). As with Claims 15 and 16 of the '033 Patent, Claim 1 of the '922 Patent in IPR2024-00002 required "a card which occupies *the entire [] display* must, after the scrolling, be…replaced by a different card that *occupies the entire [] display*." *Samsung Elecs. Co. et al. v. Slyde Analytics LLC*, IPR2024-00002, Paper No. 13 (Decision Denying Institution of Inter Partes Review), at 14-15 (April 5, 2024).

86. It is my understanding that the Board unequivocally held that Louch's "open widget, however, does not occupy the entirety of the display" and Paragraph 67 of Louch, which Petitioner relies upon (Pet. at 50-51, 54) "does not discuss scrolling of widgets":

> The assertion that Louch teaches scrolling through widgets that occupy the entire display is not sufficiently persuasive. Paragraph 67 of Louch does not discuss scrolling of widgets. It is unsupported assertion that this sentence in paragraph 67 refers to the appearance of a widget during scrolling "The widget 402 can consume the entire display area or a portion thereof." Ex. 1005 ¶ 67. Rather, paragraph 87 specifically discusses scrolling and states that the user can touch the display of a device with one or more fingers and make a gesture in any direction "to scroll through open or closed widgets." *Id*. ¶ 87. An open widget, however, does not occupy the entirety of the display. Louch describes: "a widget can be opened in a user interface (e.g., in response to multi-touch input) and expanded to consume substantially all of the multi-touch-sensitive display area." *Id*. ¶ 81. Simply put, "substantially all" of a digital matrix display is not the same as "the entire digital matrix display."

Samsung Elecs. Co. et al. v. Slyde Analytics LLC, IPR2024-00002, Paper No. 13 (Decision Denying Institution of Inter Partes Review), at 14-15 (April 5, 2024). In my opinion, there is no reason here why the Board should hold differently.

87. Therefore, in my opinion, the combination of Mooring, Satoshi, and Louch fails to render obvious Claims 15 and 16.

D. Ground 4: Claims 4-5 are Not Obvious Over the Combination of Mooring and Satoshi in Further View of Inoue and Tam

1. A Person of Ordinary Skill in the Art Would Not Be Motivated to Combine Mooring and Satoshi with Inuoe and Tam

88. I note that Inoue "relates generally to a dial indicator display device for indicating information using analog hands or needle indicators." Ex. 1010, [0003]. In my opinion, the disclosure of Inoue describes that its movements, particular of hands are driven by a motor, and are not a simulation, let alone a combination of external stimulus to create a corresponding simulation on the display:

> The movement **40** controls driving the hands **30** (hour hand **31** and minute hand **32)** and controls driving the display panel **20.**
>
> …
>
> The drive means **42** includes a steppingmotor46 for driving the hands, and a wheel train **47** for transferring output from the stepping motor **46** to the hour hand **31** and minute hand **32.**

Ex. 1010, [0120]-[0122].

89. In my opinion, to the extent that Inoue discloses an LCD display as Petitioner alleges (Pet. at 63), the digital display is unrelated to a simulation of mechanical movements or components. Rather, the display would only include date information, a schedule, a to-do list, etc.:

> In FIG. **1** and FIG. **4** the date information including the year, month, and day of the current date is displayed. The display panel drive circuit **414** updates the date display on the display panel **20** once a day. The displayed information can be adjusted using the crown **451** or buttons **452** and **453,** for example. The buttons, for example, can be operated to change the information displayed on the display panel **20** to various other types of time information, including the day of the week, the current time (hour, minute, second), or world time information including the name of a city in a different time zone and the current time in that city. Other information, such as a schedule, a to-do list, or an address book, can also be displayed if the combination timepiece **1** includes the functions of a PDA (personal digital assistant), for example.

Ex. 1010, [0159].

90. Further, taken in context, the disclosure of Inoue was patented in 2007 by Seiko, one of the largest watch vendors. Based on my experience, in 2007, a POSITA would have known that Seiko watches did not contemplate incorporating simulations on a display based on user interaction with external components, such as a crown stem.

91. Therefore, in my opinion, a POSITA would not have been motivated to combine a reference like Inoue that has nothing to do with simulated mechanical

components and only corresponds to motor driven hands/dials with respect to actual timekeeping with references that discuss simulations, like Satoshi or Tam, described below.

92. I note that Tam "present[s] a study on the physical-based models of the Graham Escapement and the Swiss Lever Escapement. It can be used for educational purposes, by which students and the general public can learn the basics of mechanical watches / clocks. It can also be used for industry purpose, by which watchmakers can optimize their designs." Ex. 1012, 2.

93. I understand that, to provide greater insight into Tam's disclosure (Ex. 1012), Tam wrote a thesis that "presents a Virtual Library of Mechanical Timepieces. The Virtual Library is an online database containing different kinds of mechanisms used in mechanical watches *I* clocks. It uses 3-dimension (3D) Computer-Aided Design (CAD) models to demonstrate the working of these mechanisms. The Virtual Library provides an educational tool for various people who are interested to mechanical timepieces, including engineering students (university students and vocational school students), watchmakers, designers, and collectors. In addition, the CAD models are drawn to exact dimension. As a result, it can be used by watchmakers to validate their designs." Ex. 1015, ii.

94. First, it is my opinion that a POSITA would have understood that Tam describes simulating the interactions between "actual" components rather than the

combination of an actual component on the outside, such as a crown, with simulated mechanical components on a display.

95. Second, I note that Tam does not disclose implementing its simulations on the wristwatch itself. Based on Tam's thesis, its simulations are made possible through complex CAD models to validate designs. As I note above in Section V and VI.A.1, ***wristwatches*** would not nearly have enough computing power to support CAD tools or online access to public databases.

96. I note that Petitioner's expert, Dr. Bederson, simply ignores these two points. Rather he testifies that merely the presence of physical inputs and the simulation teachings of Tam and Satoshi would be enough to cause an interaction between external components and a corresponding simulated display on a wristwatch with limited power and no access to online databases or CAD tools:

> [O]nce you have a device that has these physical inputs, such as a stem or a push button, and those are connected up to the system so that the microcontroller can receive data indicating user interaction with those -- with that crown and push button, then I think it would be well within the skill of a POSITA to use the teachings of the various simulations, for example, by Satoshi and Tam, to take those inputs and impact or use those inputs in the simulation to cause an action or direct action to that simulation.

Ex. 2003, 57:2-18. In my opinion, a POSITA would not have understood there to be a motivation to combine Mooring, Satoshi, Inoue, and Tam with nothing other than Dr. Bederson's simplistic (and incorrect) rationale.

97. Therefore, in my opinion, a POSITA would not be motivated to combine the teachings of Tam with any wristwatch reference, including those of Mooring or Inoue, because Tam's simulations are technically impossible and do not relate to a mixture of external components and simulated display based on interaction with external components.

2. The Combination of Mooring, Satoshi, Inoue, and Tam Does Not Render Obvious Claims 4-5

98. I note that Claims 4-5 are dependent on Claim 1. Therefore, Claims 4-5 are not rendered obvious by Mooring and Satoshi in further view of Inoue and Tam for at least the same reasons as Claim 1 noted for Ground 1, on which Petitioner's Ground 4 relies.

3. The Combination of Mooring, Satoshi, Inoue, and Tam Does Not Render Obvious *"a crown stem being displayed on said display opposite said crown, the position of said displayed crown stem being modified by said microcontroller when said microcontroller detects that said crown has been actuated, so as to simulate a direct action by said crown on said displayed crown stem*," as Required by Claim 4

99. I understand that Claim 4 requires "a crown stem being displayed on said display opposite said crown." In my opinion, a POSITA would have understood that Claim 4 requires a physical crown and a simulated crown stem on the display.

100. I note that Petitioner only relies on Inoue for disclosing a "crown [that] can be used to adjust the information displayed on the LCD display of the wristwatch" and Tam for its "teaching to simulate and display internal watch

components to the crown of Inoue." Pet. at 67-68.

101. I understand that Petitioner admits that Inoue discloses that a crown may adjust information. I note that, as Fig. 1 of Inoue shows, Inoue discloses no simulated mechanical component opposite of the crown:

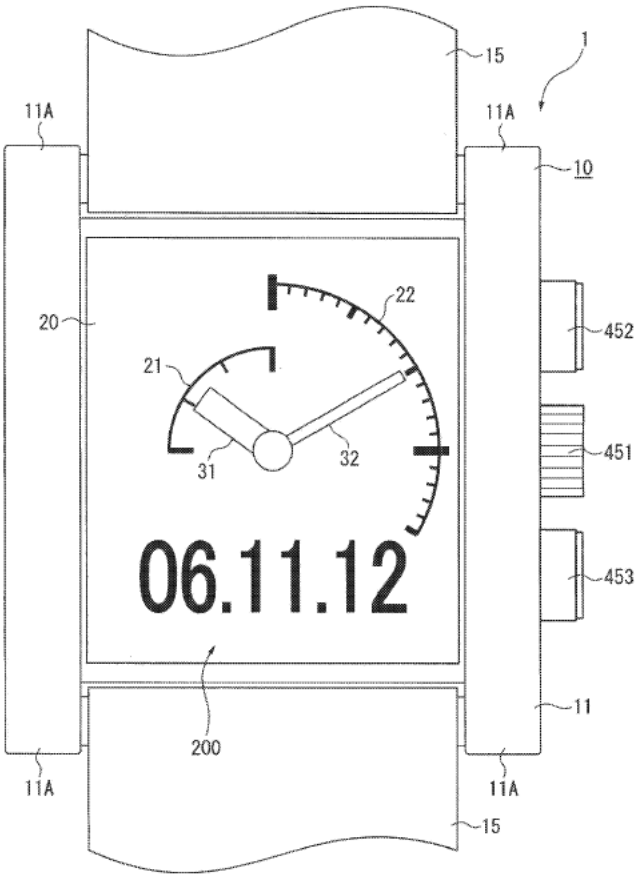

FIG. 1

Ex. 1010, Fig. 1.

102. Further, as I note in Section VI.D.1, Tam merely discloses simulations of actual components so that a designer or student would understand how the actual mechanical components interact. In my opinion, a POSITA would not understand

Tam to suggest that a physical crown can interface with a simulated "crown stem being displayed on said display opposite said crown."

103. I note that both Inoue and Tam are silent regarding both the claimed simulated "crown stem" and the claimed "position of said displayed crown stem being modified by said microcontroller when said microcontroller detects that said crown has been actuated."

4. The Combination of Mooring, Satoshi, Inoue, and Tam Does Not Render Obvious *"an element displayed on said display opposite said push-button, the position of said element being modifiable by said microcontroller when said microcontroller detects that said push-button has been actuated, so as to simulate a direct action by said push-button on said displayed element*," as Required by Claim 5

104. I understand that Claim 5 requires "an element displayed on said display opposite said push-button." In my opinion, a POSITA would have understood that Claim 5 requires a physical push-button and a simulated element on the display opposite of the button.

105. I note that Petitioner only relies on Inoue for disclosing a "buttons [that] can be used to adjust the information displayed on the LCD display of the wristwatch" and Tam for its "teaching to simulate and display internal watch components to the crown[4] of Inoue." Pet. at 70-71.

106. I understand that Petitioner admits that Inoue discloses that a push-

[4] Patent Owner assumes this is a typo and "crown" is meant to be "push-button."

button may adjust information. As Fig. 1 of Inoue shows, Inoue discloses no simulated mechanical element opposite of the crown:

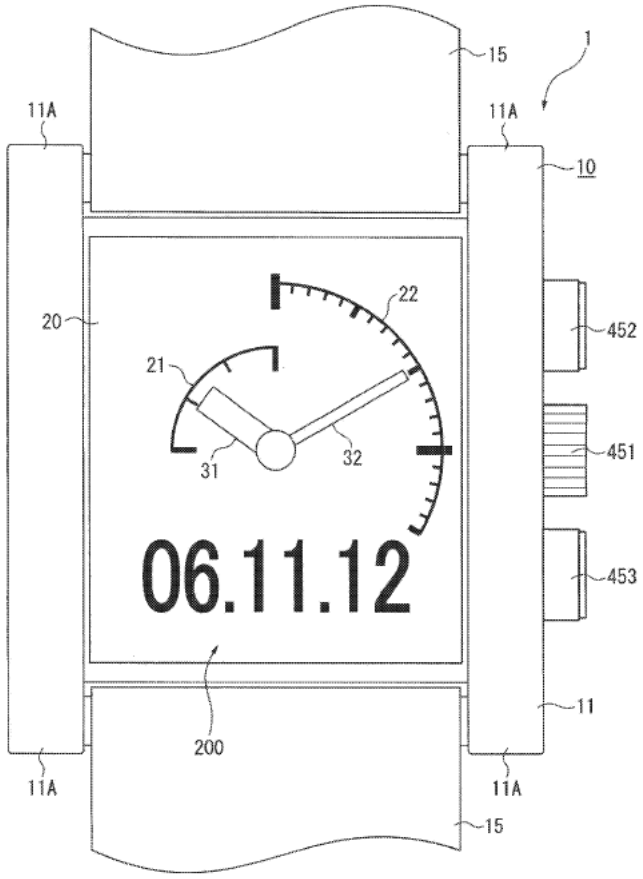

FIG. 1

Ex. 1010, Fig. 1.

107. Further, as I note in Section VI.D.1, Tam merely discloses simulations of actual components so that a designer or student would understand how the actual mechanical components interact. In my opinion, a POSITA would not understand Tam to suggest that a physical push-button can interface with a simulated "element displayed on said display opposite said push-button."

108. In my opinion, bBoth Inoue and Tam are silent regarding both the claimed simulated "element" and the claimed "the position of said element being modifiable by said microcontroller when said microcontroller detects that said push-button has been actuated, so as to simulate a direct action by said push-button on said displayed element."

E. Ground 5: Claims 6-10 and 13 are Not Obvious Over the Combination of Mooring and Satoshi in Further View of Tam and Ruchonnet

1. A Person of Ordinary Skill in the Art Would Not Be Motivated to Combine Mooring and Satoshi with Tam and Ruchonnet to Disclose Claims 6-10 and 13

109. As I note above, there is no motivation to combine Tam with Mooring and Satoshi because Tam is directed to the simulation of mechanical watches and clocks using complex assistance like CAD so that watch designers can ensure mechanical parts work properly and meet any design specifications. Section VI.D.1. There is no disclosure of simulation on the wristwatch itself, as the claims require. Section VI.D.1.

110. I understand that Petitioner admits that Ruchonnet adds nothing more to the combination other than disclosing "a mechanical watch with various internal components." Pet. at 73 ("additional internal components taught in Ruchonnet"). I note that Petitioner does not cite to Ruchonnet anywhere else in its section on "[a] POSITA would have been motivated to combine Mooring and Satoshi's teachings

with the teachings of Tam and Ruchonnet and would have had a reasonable expectation of success" outside of restating the references in the combination. Pet. at 72-76.

111. I understand that, according to Petitioner, each of Claims 6-10 and 13 allegedly correspond to simulated versions of Ruchonnet's internal components, as displayed on a watch. Pet. at 76-87. However, in my opinion, a POSITA would understand that the mere knowledge of various mechanical watch components that Petitioner admits Ruchonnet provides is not enough to use the simulations of Tam on a wristwatch.

112. In my opinion, there is no motivation to combine Tam and Ruchonnet for another reason. Further, in my opinion, a POSITA would understand that each of Claims 6-10 and 13 describe detailed simulated mechanisms of mechanical watch movements. However, I understand that Tam outrightly precludes such a disclosure:

> However, this simulation fails to show the detailed mechanism of mechanical watch movements. It shows only the movement of the escapements but it can not tell how the escapement is connected with the gears train and other components, such as hairspring, barrel, rotor etc.

Ex. 1015, 0021. In my opinion, the express disavowal of simulations with "detailed mechanism[s] of mechanical watch movements (particularly how certain components are "connected with the gears train…") teaches away from combining

Tam with Ruchonnet for the express purpose of simulating detailed mechanical movements involving gear trains, as claimed in Claims 6-10 and 13.

2. The Combination of Mooring, Satoshi, in further view of Tam and Ruchonnet Does Not Render Obvious Claims 6-10 and 13

113. I note that Claims 6-10 and 13 are dependent on Claim 1. Therefore, Claims 6-10 and 13 are not rendered obvious by the combination of Mooring and Satoshi in further view of Tam and Ruchonnet for at least the same reasons as Claim 1 noted for Ground 1, on which Petitioner's Ground 5 relies.

F. Ground 6: Claim 18 is Not Obvious Over the Combination of Mooring and Satoshi in Further View of Lee, Tam, Inoue, and Ruchonnet

114. I note that Claim 18 is not rendered obvious by the combination of Mooring and Satoshi in further view of Lee, Tam, Inoue, and Ruchonnet for at least the same reasons as noted for Grounds 2, 4, and 5, which Petitioner's Ground 6 relies on. Pet. at 87-88.

VII. SUMMARY OF OPINIONS

115. It is my opinion that the Board should confirm the validity of the challenged claims. I reserve the right to supplement my opinions in response to any additional contentions by Petitioner or opinions by Benjamin Bederson, and as the Board permits.

116. I declare that all statements made herein of my own knowledge are true and that all statements made on information and belief are believed to be true; and

further that these statements were made with knowledge that willful false statements and the like so made are punishable by fine or imprisonment, or both, under Section 1001 of Title 18 of the United States Code.

Executed on June 28, 2024 at Auburn, NH.

Thomas Blackadar

EXHIBIT A

Thomas Blackadar
34 Squirrel Drive
Auburn NH 03032
tblackadar@comcast.net
508-654-0766

Summary

Senior Executive with a track record of bringing products to market on time on budget. Great cross functional team skills using agile, Kanban, six sigma techniques as appropriate. Built a successful company from the ground up; using skills in negotiating contracts, partnerships, raising VC funds, and doing M&A. Successfully brought several Consumer, B2B and SAS products to market.

Core Competencies

Good at simplifying complex systems; finding the minimal viable product; architecting software and hardware platforms; and working in an agile development environment. Managing and delivering products on time and near budget.

Professional Career

Aion Biosystems June 2021-May 22, 2024 COO /CTO

Employee #2 Built the technical organization starting with implementing an ISO 13485 compliant QMS system. Starting with marketing requirements from power point and translating them to requirements, then established Risk/Harms and the follow-on system requirements. Afte Phase I completion we started the design in month five. Established out sourced high volume manufacturing, and with-in 18 months had both our 510k Certification and our ISO 13485 Certification. We started deploying our product to Oncology practices that same month.

Third Pole Therapeutics April 2017-June 2021. Class III medical device.

Sr Electrical Eng Manager and Sr Principal engineer. Provided the initial system and subsystem requirements, system, and engineering SOPs, coding style requirements, established with marketing the alarm system and aligned with 60601, <security standards> and other applicable standards. Established 60601 test strategy, built the software, electrical and systems engineering groups.

FitSense Technology LLC (2015-Present)

FitSense Technology LLC provides consulting services for startups and fortune 500 companies. Customers include: Under Armor, Jawbone, Angler Labs, Microsoft, Sole Power, Koko Fit, Knowbility, Humon, Shimmer and FitLinxx.

FitLinxx 2007-2015 COO /CTO (post-merger with FitSense)

FitLinxx provided wireless hardware, wearable electronics and infrastructure for fitness clubs, employee wellness programs, and fitness enthusiasts. Sold to LumiraDx.

At FitLinxx as COO responsible for merging the two corporate entities. Reduce product cost of the FitLinxx system by 50% and reduced operational costs by over $150k per month. Responsible for the outsourced manufacturing in China and the US. Responsible for the IT infrastructure, cloud delivery service, disaster recovery plans and was the chief security officer. As CTO I set provided new platform architectures and generated over 15 new patent applications and established a successful licensing program. I established FDA guidelines, HIPAA, privacy and security policy for the company.

I was the industry liaison for consortiums and standard organizations (WLSA, CEA, HIMSS, IEEE and FitC).

FitSense Technology 1997-2007 Founder/CEO

FitSense was founded to put the human body on line wirelessly. We made sensor data actionable by the user. FitSense developed systems and products for sale and license. The company in my basement and grew it to 24 people and $4M in revenue. Raised Friends and Family, angel and VC funds. We had several successful consumer product launches and in 2007 we merged the company with FitLinxx Inc.

Consumer Products:

- ***FS-1 the worlds first speed distance and heart rate monitor connected to the cloud.***
- ***Nike****, (Nike+ Consumer Product),*
- ***Reebok*** *(Traxtar consumer product).*

Significant Contracts/Programs

- ***Welch/Allyn*** *(Nightingale ECG Monitor),*

- ***Motorola*** *(MotoHealth Nextel based health monitors),*
- ***Army/NASA*** *(Warfighter Physiological Monitor, Mt. Everest Health Monitor, John Glenn/Space Shuttle Sleep study, copper miners in Australia),*
- ***NBC*** *2000 (Monitoring Michael Johnson in Olympic Trials),*
- ***Discovery Channel*** *(Adventure Racing Series health and location monitoring system),*
- ***WBZ Boston Marathon live broadcast tracking athletes HR/Speed/Distance/Caloric burn.***

Bolt Beranek Newman 1982-1997

BBN was a world leader in innovative technologies, now owned by Raytheon. Involved in many innovative programs at BBN exposed to sensor s systems, acoustic feedback systems, networking, supercomputing, mobile platforms and wearable computing.

BBN Technologies, Advanced Networking Department Manager. **1991-1997**

The advanced networking department performed new innovative network topologies and provided manufacturing and support services for most of BBN. Grew the department to 80 employees $30M P&L. As department manager was responsible for generating the department sales pipeline, managing our budgets and contracts.

BBN Advanced Computers (Wholly owned subsidiary) **Director of Operations 1986-1991 BBN**

BBN ACI developed the world's fastest computer; the ***Butterfly Parallel Processor***. Lead the Systems Engineering group and was responsible for the system design, manufacturing and support of one of the first large scale parallel processors in the world. Developed BBNs contract manufacturing relationships, the support organization and maintained customer relationships post sales. Reported to the CEO of BBN Advanced Computers.

BBN Computer Company Sr. Test Engineer 1982-1986

Responsible for developing board, and system level diagnostics, networking test methodologies for all of BBN's commercial products.

Education BS Electrical Engineering and Computer Science University of New Hampshire.

Affiliations Member of IEEE, IEEE Personal Health Devices Standards group (IEEE 20601-11073), and HIMSS..

Awards: Continua significant contributor, IEEE Personal Health Devices Standards significant contributor, Best Presentation IEE Body worn networks.

Publications and Patents

- Weyand, P., Kelly, M., Darley, J., Oliver, S., Ohlenbusch, N., Joffe, S., Blackadar, T. and R. Hoyt. Ambulatory estimates of maximal aerobic power from foot-ground Contact times and heart rates in running humans. J. Appl. Physiol. 91: 451-8, 2001.
- Proceeding of the ATS, June 2004; Cumulative field monitoring of ambulation in COPD M. L. Moy, MD, MSc 1,2, T. Blackadar 3, S. J. Mentzer, MD 1,2 and J. J. Reilly, MD 1,2. 1 Brigham and Women s Hospital, Boston, MA ; 2 Harvard Medical School, Boston, MA and 3 FitSense Technology Inc., Southborough, MA .
- Raymond SA, Blackadar T, Oueida W, Ohlenbusch NE. Preventing false spirometry values and invalid symptom scores in respiratory clinical trials. The Journal of Allergy and Clinical Immunology, Supplement Feb. 2004:113(2):S277
- Blackadar, T. Ambulatory Monitoring-Embeddable, Wearable "It's all about fashion", Studies in Wireless Electronics International Workshop on Wearable and Implantable Body Sensor Networks, IEE London,. 79-81, 2005
- Proceedings 2003 Sages The Use of Wireless Monitoring Sensors for Bariatric Post-Operative Fitness Training James "Butch" Rosser, MD, Björn Herman, BA, Tom Blackadar, BSEE/CS
- The Physiologic Cipher: R. Satava, T. Blackadar Telemedicine on Everest GPS World October 2001, Volume 12, Number 10 Pages 20.

- IEEE 802.11-98/296, IEEE P802.11 Wireless LANs; MOBILE MEDICAL MONITORING September 8, 1998 Blackadar, T. Wronski, J.;
- Robert J. Aiken, Adam Abramski, John Bates, Thomas Blackadar. Middleware for Ubiquitous Computing. HUC'1999. pp.301~303
- Proceedings DARPA Wearables in 2005 July 18-19 1996 Arlington, VA
- Low Power Wearable Sensors 1997 Proceedings of the ACM/Siggraph Wearables Tutorial.
- BBN-DARPA Parallel Processing Quarterly Technical Reports 1984-1985 BFLY-QTR-05, BFLY-QTR-12
- Crowther, W. and Goodhue, J. and Starr, E. and Thomas, R. and Milliken, W. and Blackadar, T. Performance Measurements on a 128-Node {Butterfly} Parallel Processor", Proceedings IEEE ICPP. 1985, pages 531-540, 1985"
- IEEE/ISO 11073-10407 Blood Pressure Specialization standard.
- Rosser JC, Herman B, Blackadar T, Noyan EL. The Use of Wireless Physiological Monitoring Sensors for Bariatric Post-Operative Fitness Training, Society of American Gastrointestinal Endoscopic Surgeons (SAGES), Los Angelos, CA, 2003.

Conferences

Co-Chair, DARPA 1996 Workshop on Wearable Computing 2005
Marketing Chair Boeing 1996 Workshop on Wearable Computing
2004 Health Care Unbound Personal Sensing systems
2005 Health Care Unbound Mobile Clinical Trial Systems
2004 Wireless Life Science
2006 Health Care Unbound Technologies For Baby Boomers
2006 Summit on behavioral Telehealth: Technology for Behavior Change Keynote Address: Web Based Tools for Collecting Activity Data and changing Behavior
2007 Club Industry Corporate Fitness
2007 World Health Congress Panel Wireless Health Care

Issued Patents

10,695,004 **Activity-dependent multi-mode physiological sensor**
10,682,573 On-line multiplayer gaming system for real-world angling events
10,478,727 Angling event detecting and reporting apparatus
9,854,986 **Health-monitor patch**
9,848,386 Intelligent data network with power management capabilities
9,734,304 **Versatile sensors with data fusion functionality**
9,700,222 Health-monitor patch
9,247,897 Monitoring activity of a user in locomotion on foot
8,749,348 Sensor device with persistent low power beacon
8,712,725 Monitoring activity of a user in locomotion on foot
8,630,699 Body worn physiological sensor device having a disposable electrode module
8,606,338 Intelligent data network with power management capabilities
8,264,328 Sensor device with persistent low power beacon
8,214,007 - Body Worn Physiological Sensor Device Having a Disposable Electrode Module
7,962,312 Monitoring activity of a user in locomotion on foot
7,937,121 Intelligent data network with power management capabilities
8,264,328 Sensor device with persistent low power beacon
7,768,415 Sensor device with persistent low power beacon
7,617,071 Monitoring activity of a user in locomotion on foot
7,466,979 Intelligent data network with power management capabilities
7,428,472 Monitoring activity of a user in locomotion on foot
7,428,471 Monitoring activity of a user in locomotion on foot
7,200,517 Monitoring activity of a user in locomotion on foot
7,187,924 Intelligent data network with power management capabilities
6,898,550 Monitoring activity of a user in locomotion on foot
6,536,139 Detachable foot mount for electronic device
6,493,652 Monitoring activity of a user in locomotion on foot
6,357,147 Detachable foot mount for electronic device
6,336,365 Low-cost accelerometer

6,298,314 Detecting the starting and stopping of movement of a person on foot
6,122,340 Detachable foot mount for electronic device
6,052,654 Measuring foot contact time and foot loft time of a person in locomotion
6,018,705 Measuring foot contact time and foot loft time of a person in locomotion