UNITED STATES PATENT AND TRADEMARK OFFICE

BEFORE THE PATENT TRIAL AND APPEAL BOARD

SAMSUNG ELECTRONICS CO., LTD.;
SAMSUNG ELECTRONICS AMERICA, INC.,

Petitioners,

v.

SLYDE ANALYTICS, LLC,

Patent Owner.

Patent No. 8,588,033
Filing Date: September 28, 2012
Issue Date: November 19, 2013

Inventors: Pascal Pozzo Di Borgo and Jorg Hysek
Title: WRISTWATCH WITH ELECTRONIC DISPLAY

PATENT OWNER'S RESPONSE

Case No. IPR2024-00006

TABLE OF CONTENTS

Page(s)

I. INTRODUCTION 1

II. THE ’033 PATENT 3

III. THE ALLEGED PRIOR ART 4

A. Mooring 4

B. Satoshi 7

C. Louch 10

D. Inuoe 11

E. Tam 13

F. Ruchonnet 14

IV. CLAIM CONSTRUCTION 14

V. PETITIONER’S PROPOSED LEVEL OF ORDINARY SKILL IN THE ART IS INCORRECT 14

A. Petitioner’s Proposed Level of Ordinary Skill in the Art Is Incorrect 14

B. Petitioner’s Expert is Not a POSITA and the Board Should Give Dr. Bederson’s Declaration No Weight 17

VI. REQUIREMENTS UNDER 35 U.S.C. § 103 19

VII. PETITIONER HAS NOT PROVED INVALIDITY OF THE CHALLENGED CLAIMS BY A PREPONDERANCE OF THE EVIDENCE 21

A. Ground 1: Claims 1 and 11-14 are Not Obvious Over the Combination of Mooring in View of Satoshi 21

1. A Person of Ordinary Skill in the Art Would Not Be Motivated to Combine Wristwatch Embodiments with Embodiments Specific to Mobile Devices or Larger Devices 21

(a) Dr. Bederson's Claim that Wristwatch and Mobile Device Microcontrollers for Mechanical Simulation Are Interchangeable Is Unsupported 22

(b) Dr. Bederson's Claim that Wristwatch and Mobile Device Microcontrollers for Mechanical Simulation Are Interchangeable Is Incorrect 23

2. The Petition Does Not Show that the Combination of Mooring in View of Satoshi Discloses "*a microcontroller being arranged for reproducing on said electronic display the simulation of a mechanical watch movement comprising a gear train, said simulation being visible so as to indicate the time, said microcontroller being further arranged for synchronizing the displayed time by said displayed mechanical movement with that of said quartz oscillator*," as Required by Claim Element 1[d] 26

(a) Mooring Does Not Disclose "*a microcontroller being arranged for reproducing on said electronic display the simulation of a mechanical watch movement*," as Required by Claim Element 1[d] 26

(b) Satoshi Does Not Disclose the Claimed "*said microcontroller being further arranged for synchronizing the displayed time by said displayed [simulation of a] mechanical movement with that of said quartz oscillator*," as Required by Claim Element 1[d] 28

3. The Combination of Mooring in View of Satoshi Does Not Render Claims 11-14 Obvious 33

4. The Combination of Mooring and Satoshi Does Not Render Obvious *"the wristwatch of claim 1, arranged for performing said synchronization periodically in an automatic manner*," as Required by Claim 11 34

5. The Combination of Mooring and Satoshi Does Not Render Obvious *"the wristwatch of claim 1, comprising means for entering and executing a request for said synchronization by the user*," as Required by Claim 12 35

6. The Combination of Mooring and Satoshi Does Not Render Obvious *"the wristwatch of claim 1, arranged for displaying said mechanical movement on the whole surface of the electronic display so as to occupy the position and the dimensions of a real mechanical movement*," as Required by Claim 13 36

B. Ground 2: Claims 2-3, 17, and 19 Are Not Obvious Over the Combination of Mooring and Satoshi in Further View of Lee 38

C. Ground 3: Claims 13-16 Are Not Obvious Over the Combination of Mooring and Satoshi in Further View of Louch 39

1. The Combination of Mooring, Satoshi, and Louch Does Not Render Obvious Claims 13-16 39

2. The Combination of Mooring, Satoshi, and Louch Does Not Render Obvious *"the microcontroller being specifically arranged for interpreting signals from the touch sensor, for selecting one screen from among several available screens depending on these signals, and for displaying this screen on the entirety of said display, said microcontroller being further specifically arranged so as to cause screens to scroll by in order to replace durably the screen displayed initially by another screen,"* as Required by Claim Elements 15[a] and 15[b] or "*said microcontroller being further arranged for interpreting signals from the touch sensor, for selecting one screen from among several available screens depending on these signals, and for displaying this screen on the entirety of said display, said microcontroller being further specifically arranged so as to cause screens to scroll by in order to replace durably the screen displayed initially by another screen,*" as Required by Claim Elements 16[f] and 16[g].....40

D. Ground 4: Claims 4-5 Are Not Obvious Over the Combination of Mooring and Satoshi in Further View of Inoue and Tam.....42

1. A Person of Ordinary Skill in the Art Would Not Be Motivated to Combine Mooring and Satoshi with Inoue and Tam.....42

2. The Combination of Mooring, Satoshi, Inoue, and Tam Does Not Render Obvious Claims 4-5 46

3. The Combination of Mooring, Satoshi, Inoue, and Tam Does Not Render Obvious *"a crown stem being displayed on said display opposite said crown, the position of said displayed crown stem being modified by said microcontroller when said microcontroller detects that said crown has been actuated, so as to simulate a direct action by said crown on said displayed crown stem*," as Required by Claim 4.....46

4. The Combination of Mooring, Satoshi, Inoue, and Tam Does Not Render Obvious *"an element displayed on said display opposite said push-button, the position of said element being modifiable by said microcontroller when said microcontroller detects that said push-button has been actuated, so as to simulate a direct action by said push-button on said displayed element*," as Required by Claim 5 49

E. Ground 5: Claims 6-10 and 13 Are Not Obvious Over the Combination of Mooring and Satoshi in Further View of Tam and Ruchonnet 51

1. A Person of Ordinary Skill in the Art Would Not Be Motivated to Combine Mooring and Satoshi with Tam and Ruchonnet to Disclose Claims 6-10 and 13 51

2. The Combination of Mooring, Satoshi, in further view of Tam and Ruchonnet Does Not Render Obvious Claims 6-10 and 13 53

F. Ground 6: Claim 18 is Not Obvious Over the Combination of Mooring and Satoshi in Further View of Lee, Tam, Inoue, and Ruchonnet 53

VIII. CONCLUSION 53

TABLE OF AUTHORITIES

Page(s)

Cases

Apple, Inc. v. Contentguard Holdings, Inc.,
IPR2015-00355, Paper 9 (P.T.A.B. June 26, 2015) 19

Broadcom Corp. v. Emulex Corp.,
732 F.3d 1325 (Fed. Cir. 2013) 20

Graham v. John Deere Co. of Kansas City,
383 U.S. 1 (1966).....19

Innogenetics, N.V. v. Abbott Lab'ys.,
512 F.3d 1363 (Fed. Cir. 2008) 20

Intelligent Bio-Sys., Inc. v. Illumina Cambridge Ltd.,
821 F.3d 1359 (Fed. Cir. 2016) 20

KSR Int'l Co. v. Teleflex Inc.,
550 U.S. 398 (2007).....20

Kyocera Senco Indus. Tools Inc. v. Int'l Trade Comm'n,
22 F.4th 1369 (Fed. Cir. 2022) 17

Los Angeles Biomedical Rsch. Inst. at Harbor-UCLA Med. Ctr. v. Eli Lilly Co.,
849 F.3d 1049 (Fed. Cir. 2017) 20

Pers. Web Techs., LLC v. Apple, Inc.,
848 F.3d 987 (Fed. Cir. 2017) 20

Samsung Elecs. Co. v. Slyde Analytics LLC,
IPR2024-00002, Paper 13 (P.T.A.B. April 5, 2024) 41, 42

Unified Pats., LLC v. AK Meeting IP LLC,
IPR2022-01142, Paper 20 (P.T.A.B. Jan. 5, 2024) 17

Statutes

35 U.S.C. § 112(f).....14

Other Authorities

37 C.F.R. § 42.104 14

37 C.F.R. § 42.104(b)(3) 14

LIST OF EXHIBITS

Exhibit No.	Description of Document
2001	Second Amended Docket Control Order, Dkt. 33, *Slyde Analytics LLC v. Samsung Elecs. Co.*, No. 2:23-cv-00083-RWS-RSP (E.D. Tex. October 5, 2023)
2002	Defendants' Joint Patent L.R. 3-3 Invalidity Contentions and Subject Matter Ineligibility Contentions, *Slyde Analytics LLC v. Samsung Elecs. Co.*, No. 2:23-cv-00083-RWS-RSP, served November 14, 2023
2003	Deposition of Benjamin B. Bederson, Ph.D., taken in *Samsung Elecs. Co. et al. v. Slyde Analytics LLC*, IPR2024-00006 on May 31, 2024 ("Bederson Depo.")
2004	Declaration of Thomas Blackadar ("Blackadar Decl."), dated June 28, 2024 and Exhibit A, Curriculum Vitae of Thomas Blackadar
2005	"TinyOS," available at http://www.tinyos.net
2006	"TinyOS – Wikipedia," available at https://en.wikipedia.org/wiki/TinyOS
2007	Philip Levis, "Experiences from a Decade of TinyOS Development," available at https://www.usenix.org/system/files/conference/osdi12/osdi12-final-183.pdf
2008	"Timex Datalink," available at https://en.wikipedia.org/wiki/Timex_Datalink
2009	"Seiko Data-2000," available at https://en.wikipedia.org/wiki/File:Seiko_Data-2000,_The_First_Computer_Watch,_Circa_1983-1984,_LCD_Watch_with_Docking_Station_(8515983575).jpg
2010	"Wear OS," available at https://en.wikipedia.org/wiki/Wear_OS
2011	"Tizen," available at https://en.wikipedia.org/wiki/Tizen
2012	"WatchOS," available at https://en.wikipedia.org/wiki/WatchOS

I. INTRODUCTION

The Board should issue a Final Written Decision finding all of the Challenged Claims of the U.S. Patent No. 8,588,033 (Ex. 1001, the "'033 Patent") not unpatentable because Samsung Electronics Co., Ltd. and Samsung Electronics America, Inc. (collectively, "Petitioner" or "Samsung") fails to show that any combination of Mooring (Ex. 1005), Satoshi (Ex. 1007), Lee (Ex. 1008), Louch (Ex. 1009), Inoue (Ex. 1010), Tam (Ex. 1012), and Ruchonnet (Ex. 1011) discloses or renders obvious the inventions of Claims 1-19 (the "Challenged Claims").

Dr. Bederson's alleged motivations to combine fail because a POSITA would not have viewed the components, such as microcontrollers, of a mobile device and a wristwatch as interchangeable. For example, there would be no reasonable expectation of success in combining Mooring and Satoshi, given that a wristwatch system would be incapable of accommodating the processing power and memory requirements of a mobile device application, as disclosed in Satoshi. Similarly, the disclosure of Tam only relates to the CAD simulations of actual mechanical components for the purposes of designers and students understanding and ensuring the proper design of pure mechanical watches, but Dr. Bederson somehow applies that teaching to interactions between simulated components and external components. Dr. Bederson's conclusions regarding any alleged motivation to combine and particularly his ignorance of the state of the art at the time of the

invention of the ’033 Patent are indicative that he is not a POSITA, as properly defined, and his Declaration should be afforded no weight.

Even if there were a motivation to combine (there is not), each of Petitioner’s alleged combinations also fails to render obvious the claims of the ’033 Patent. First, Mooring does not disclose a simulation of a mechanical watch display, nor does it use a microcontroller to simulate a mechanical watch display based on quartz oscillation. Second, Satoshi does not disclose a microcontroller arranged to synchronize the time from a phone’s clock function with the time displayed by a simulated mechanical watch, as required by Claims 1 and 11-14, but merely allows a user to manually adjust mechanical components on Satoshi’s mobile application to match the mobile device’s clock function. Third, as this Board has previously held, Louch does not disclose a microcontroller that can interpret touch sensor signals for selecting a screen among many screens, where the selected screen will be displayed on the entirety of the display. Specifically, Louch does not disclose the selecting of a screen performed by “caus[ing] screens to scroll by” so that the user can make a selection that will replace the previous screen, and where the new selection will also be displayed on the entirety of the display, as required by Claims 15 and 16. Fourth, combining Tam’s disclosure of simulating mechanical watch components in combination with the disclosure of certain mechanical watch components (as per Inoue and Ruchonnet) does not disclose (a) the interaction of

external components with associated simulated movements on a display; or (b) complex simulations occurring on a wristwatch as opposed to a CAD simulation on a computer, as in Tam.

Patent Owner respectfully submits that Petitioner's deficient arguments, Patent Owner's arguments presented herein, and the additional evidence submitted herewith, such as the Declaration of Dr. Thomas Blackadar and the deposition testimony of Dr. Benjamin B. Bederson, demonstrate that the Challenged Claims are patentable. Accordingly, the Board should issue a Final Written Decision finding all the Challenged Claims of the '033 Patent not unpatentable.

II. THE '033 PATENT

The '033 Patent "pertains to a wristwatch, in particular an electronic wristwatch having a high-resolution display screen." '033 Patent, 1:15-17.

The '033 Patent describes the advantage of its claimed simulated watch movements as different from real physical hands, dials, gears, etc. in the prior art. *Id.*, 2:40-43 ("This watch thus makes it possible to display a simulated mechanical movement that is as complex as desired whilst avoiding the manufacturing costs of a real, physical and tangible mechanical movement.").

The '033 Patent also describes that it provides an invention that is an improvement over the inadequate state of the prior art that incorporates physical dials and hands in combination with the electronic movement of quartz:

> Electronic watches, most often regulated by a quartz crystal, have the advantage of great accuracy and moderate cost thanks to industrial manufacturing technology. The time calculated by electronic watches is most often displayed in digital fashion on a liquid crystal segment display or sometimes ***by means of hands driven by a stepping motor whose running is regulated by the quartz***. . . . Stepping motors generally cause a jerky displacement of the hands, considered unquiet and not representative of the continuous passing of time.

Id., 1:22-34 (emphasis added).

As the ’033 Patent further describes, at the time of the invention, microcontrollers for wristwatches could not be compared to or be combined with microcontrollers for mobile phones or other larger computing devices because of the size and power consumption limitations that are particular to wristwatches.

> The invention is also based on the observation that the computational power of the current watch microcontrollers (i.e. of microcontrollers of a size and with a power consumption compatible with a watchmaking application) enables a realistic simulation of a complex mechanical movement to be calculated and displayed in real time.

Id., 2:53-58.

III. THE ALLEGED PRIOR ART

A. Mooring

Mooring “relates to a modular movement that is both fully functional standalone as well as interchangeable in other portable devices, such as watches.”

Ex. 1005, [0022].

In every disclosure of dials or hands in Mooring, Mooring describes physical dials and hands instead of a simulation. FIG. 1A "illustrate[s] an embodiment where the modular movement 12a is implemented as a mechanical movement," uses a "dial and hands." *See id.*, [0038]. FIGS. 1B and 1C do not show dials and hands but "illustrate example embodiments where the modular movements 12b and 12c are implemented as an electronic movement. Examples of an electronic movement may include a quartz movement with an analog or digital display, and with or without a battery." *Id.*, [0039]. Even if hands and dials are the disclosed analog display in FIGS. 1B and 1C, Mooring makes clear that the hands and dial would be physical:

> An example type of electronic movement is a quartz movement used in quartz watches that utilizes frequency of vibrations of a quartz crystal to accurately regulate the operation of the watch. Quartz movements may be automatic (a self-winding rotor mechanism) or battery powered. The majority of watches made today are equipped with electronic movements that feature an ***analog time display having rotating hands on a face or dial***.

Id., [0003] (emphasis added).

In another embodiment of Mooring, different from the exemplary embodiment involving the quartz movement as a modular movement, a modular movement could also be a computer-based movement. For example, "FIG. 6 is a block diagram illustrating computer components on the PCB comprising the

modular movement 12b according to an exemplary embodiment." *Id.*, [0055]. Mooring explicitly discriminates between embodiments involving a "quartz movement" and embodiments involving "a computer-based movement with a touchscreen or LCD display."

> An example type of electronic movement is a quartz movement used in quartz watches that utilizes frequency of vibrations of a quartz crystal to accurately regulate the operation of the watch.
>
> …
>
> ***Other watches*** equipped with electronic movements may include digital displays and small computers that are used in many types of electronic devices.

Id., [0003]-[0004] (emphasis added).

> FIGS. 1B and 1C illustrate example embodiments where the modular movements 12b and 12c are implemented as an electronic movement. Examples of an electronic movement may include a quartz movement with an analog or digital display, and with or without a battery. ***Another example of an electronic movement*** may include a computer-based movement with a touchscreen or LCD display and battery, for instance.

Id., [0039] (emphasis added). By using "other watches" or "[a]nother example," Mooring differentiates between electronic movement embodiments involving quartz movements from those electronic movement embodiments involving digital displays, such as in FIG. 6.

In Mooring's embodiment using computer-based movement as a modular movement, Mooring describes the components that would make up the computer-based movement. Mooring states that "[m]icroprocessor 614 and/or DSP may be capable of concurrently executing multiple software routines, including system code, to control the various processes of the modular movement 12b." *Id.*, [0057]. As another component of this embodiment, Mooring's display controller 630, "may access RAM 622 and transfer processed data, such as time and date and/or a user interface, to the touchscreen 506 for display." *Id.*, [0060].

B. Satoshi

Satoshi "relates to a rotating body image display device and a rotating body image display program for displaying rotating bodies such as gears synchronously rotating together." Ex. 1007, [0001]. In particular, Satoshi is directed to "a program for displaying an animation of interactively operable gears of any number for mobile phone users to arrange and display in a plurality of combinations." *Id.*, [0004].

Satoshi primarily describes how a user can arbitrarily place a plurality of gears meshed together, instead of a preset gear rotating display, and how the system of Satoshi overcomes the difficulty of allowing those arbitrary gears to synchronously rotate together:

> Therefore, in order to implement the aforementioned content in mobile phones such as those described above, rather than a preset gear rotating display, an animation is

> displayed in a state in which a plurality of gears meshed together that a user places arbitrarily are synchronized with each other, which was extremely difficult. That is, the gears meshing together have different rotation rates based on the ratio of the number of their teeth, and because the gears meshed together are synchronized so that the tooth space between the teeth of one gear and the tooth of another gear mesh, displaying an animation of two or more gears having different rotation rates and that are synchronized together was difficult under conditions in which the functions of a mobile phone are limited as described above.

Id., [0006].

In one embodiment, Satoshi describes that a user can ***manually*** adjust the angles for the hour hand, minute hand, and second hand on its gear display in order to match the mobile phone's clock function:

> That is, ***based on an operation by the user***, the current time can be read from the clock function of the mobile phone 1, and corresponding to the hour, minute, and second that was read, ***a process is performed in which the hour hand 9a, the minute hand 9b, and the second hand 9c are respectively set to an angle*** for the current hour, an angle for the current minute, and an angle for the current second (steps S23, 24, and 25). Furthermore, each change operation can be repeated, but by operating the set key, the angles of the hands 9 are fixed and the process ends (step S26).

Id., [0087] (emphasis added). More specifically, a user enters an "editing mode," where the user rotates the hands to match the phone clock time. After the editing mode, the rotation of the hands recommences in execution mode. Satoshi's

disclosure even notes that there "may be ***a long time***" or "***a big difference*** between a time when the editing mode is opened and a time on the clock when the hands 9 are adjusted," and therefore "angles of the hands 9 when changed ***will not match*** the time when the editing mode was opened, and the time cannot be set accurately." *Id.*, [0088] (emphasis added). This "difference" is precisely because of delay between the user actions involved during editing mode and execution mode when the hands start rotating again:

> Note that when a time display is enabled using the hand 9a, the minute hand 9b, and the second hand 9c, in editing mode, editing is performed with rotation of the gears 7 in a stopped state (a state upon opening the editing mode in which rotation of the hands 9 is stopped), the execution mode is returned to, rotation of the hands 9 recommences, and when drawing the hands 9, the hands 9 advance to the current time and are redrawn. However, upon opening the editing mode, the clock can actually be seen, and it ***may be a long time until the angles of the hands 9 change, there may be a big difference between a time when the editing mode is opened and a time on the clock when the hands 9 are adjusted***, and even if the angles of the hands 9 when the editing mode is opened while the execution mode is opened advance to angles of the hands 9 based on the current time, ***angles of the hands 9 when changed will not match the time when the editing mode was opened, and the time cannot be set accurately***.

Id., [0088] (emphasis added). Therefore, any matching of time between Satoshi's display's hands and gears and Satoshi's phone clock is performed through user involvement during an editing mode.

Satoshi discloses a calculation processing part 3 that is responsible for executing the display (*e.g.*, rotating animated gears and hands) or adjusting the color scheme based on user specification (*e.g.*, size of gears, number of teeth per gear, rotation rate, color, etc.):

> The calculation processing part 3 executes the rotating body image display program of the present invention and functions as display controlling means and color changing means of the present invention.

Id., [0040]; *see also id.*, [0042] (describing that part 3 "displays an animation of a plurality of gears 7 (spur gears) as rotating bodies"), [0067] (describing that part 3 displays the gears according to user settings in an editing mode), [0080] ("part 3 for performing the color changing process"), [0103] (describing that the calculation processing part 3 ensures "timings are substantially synchronized for switching the image data for the rotating bodies together, which are displayed in a synchronously rotating state" of user-specified gears or other rotating bodies).

C. Louch

Louch is directed towards presenting a widget on the display in response to touch input, where the widget is capable of displaying dynamic behavior determined by a scripting language file associated with the widget. Ex. 1009, Abstract.

Louch discloses that after scrolling, the user must click or touch the dashboard/widget to invoke the widget and cause the dashboard/widget to be

displayed to cover the entire display. *Id.*, [0080]. Specifically, Louch states:

> In some implementations, the user can scroll (horizontally or vertically) through dashboards or widgets across the display area 502 by touching the widgets and making the appropriate finger gestures in horizontal or vertical directions. When a desired dashboard/widget is found, the ***user can click or touch the dashboard/widget to invoke the widget***. In some implementations, ***when the dashboard/widget is invoked the dashboard/widget is displayed to cover the entire display area*** 502 (full screen).

Id., [0080] (emphasis added).

In other implementations, Louch requires user intervention so that "a widget can be opened in a user interface (*e.g.*, ***in response to multi-touch input***)," and additionally, opening or selecting a widget in Louch only causes the widget to "consume ***substantially*** all of the multi-touch sensitive display area." *Id.*, [0081] (emphasis added).

None of the embodiments of Louch show scrolling widgets in a full-screen mode (*see, e.g.*, Ex. 1009, FIGS. 5B, 5D, 5E).

D. Inuoe

Inoue "relates generally to a dial indicator display device for indicating information using analog hands or needle indicators." Ex. 1010, [0003]. The disclosure of Inoue describes that its movements, particular of hands are driven by a

motor, and are not a simulation, let alone a combination of external stimulus to create a corresponding simulation on the display:

> The movement 40 controls driving the hands 30 (hour hand 31 and minute hand 32) and controls driving the display panel 20.
>
> …
>
> The drive means 42 includes a steppingmotor 46 for driving the hands, and a wheel train 47 for transferring output from the stepping motor 46 to the hour hand 31 and minute hand 32.

Ex. 1010, [0120]-[0122].

To the extent that Inoue discloses an LCD display as Petitioner alleges (Pet. at 63), the digital display is unrelated to a simulation of mechanical movements or components. Rather, the display would only include date information, a schedule, a to-do list, etc.:

> In FIG. 1 and FIG. 4 the date information including the year, month, and day of the current date is displayed. The display panel drive circuit 414 updates the date display on the display panel 20 once a day. The displayed information can be adjusted using the crown 451 or buttons 452 and 453, for example. The buttons, for example, can be operated to change the information displayed on the display panel 20 to various other types of time information, including the day of the week, the current time (hour, minute, second), or world time information including the name of a city in a different time zone and the current time in that city. Other information, such as a schedule, a to-do list, or an address book, can also be displayed if the combination timepiece 1 includes the

> functions of a PDA (personal digital assistant), for example.

Ex. 1010, [0159].

E. Tam

Tam "present[s] a study on the physical-based models of the Graham Escapement and the Swiss Lever Escapement. It can be used for educational purposes, by which students and the general public can learn the basics of mechanical watches / clocks. It can also be used for industry purpose, by which watchmakers can optimize their designs." Ex. 1012, 2.

To provide greater insight on what Tam is disclosing, Tam wrote a thesis that "presents a Virtual Library of Mechanical Timepieces. The Virtual Library is an online database containing different kinds of mechanisms used in mechanical watches *I* clocks. It uses 3-dimension (3D) Computer-Aided Design (CAD) models to demonstrate the working of these mechanisms. The Virtual Library provides an educational tool for various people who are interested to mechanical timepieces, including engineering students (university students and vocational school students), watchmakers, designers, and collectors. In addition, the CAD models are drawn to exact dimensions. As a result, it can be used by watchmakers to validate their designs." Ex. 1015, ii.

F. Ruchonnet

Ruchonnet "concerns a clockwork movement for a wristwatch, in particular a transmission device for a clockwork." Ex. 1011, [0002].

IV. CLAIM CONSTRUCTION

37 C.F.R. § 42.104 governs the required content of the petition. 37 C.F.R. § 42.104(b)(3) specifically requires the Petitioner to point out "[h]ow the challenged claim is to be construed" and also "[w]here the claim to be construed contains a means-plus-function or step-plus-function limitation as permitted under 35 U.S.C. § 112(f), the construction of the claim must identify the specific portions of the specification that describe the structure, material, or acts corresponding to each claimed function." 37 C.F.R. § 42.104(b)(3).

For the purposes of this Response, and without agreeing to any of Petitioner's proposed constructions, Patent Owner believes that claim construction is not required to resolve any issues.

V. PETITIONER'S PROPOSED LEVEL OF ORDINARY SKILL IN THE ART IS INCORRECT

A. Petitioner's Proposed Level of Ordinary Skill in the Art Is Incorrect

Patent Owner disagrees with Petitioner's self-serving proposed level of skill in the art of "a bachelor's degree in electrical engineering, computer science, computer engineering, or a related field, and 2-3 years of experience in the research,

design, development, or testing of touchscreen applications and graphical user interfaces ***for mobile devices***, with additional education substituting for experience and vice-versa." Ex. 2004, ¶ 44; Pet. at 7 (citations omitted) (emphasis added).

Instead, Patent Owner proposes that a person of ordinary skill in the art ("POSITA") would have had a bachelor's degree in electrical engineering, computer science, computer engineering, or a related field, and 5-6 years of experience in the research, design, development, or testing of touchscreen applications and graphical user interfaces ***for small wearables***, with additional education substituting for experience and vice-versa. Ex. 2004, ¶ 42.

Under Petitioner's proposal, 2-3 years of experience with testing touchscreen apps and GUIs for mobile devices, would not provide a person with ordinary skill in the art to work with wristwatches having such features because wearable devices in 2010 (the priority date of the '033 Patent) were programmed primarily using bare-metal-embedded code. Ex. 2004, ¶ 45. On the other hand, mobile devices had full mobile operating systems, such as Android and iOS. *Id.* These devices ran multi-threaded software to implement the functionality. *Id.* Bare-metal-embedded code (without any OS) must incorporate similar functionality with far less software and hardware resources. *Id.* For example, the largest component of power consumption in wearable devices is external communications, if necessary, and the display and the processing required to do its required functions. *Id.* Compressing data structures,

the use of RAM, flash memory, and static memory are all considerations for wristwatches but were not large concerns of the mobile device development environments of the time. *Id.*

As a point of reference, industry leaders Google (Android), Samsung, and Apple developed separate wearable operating systems from their mobile device operating systems to address the deficiencies of bare-metal-embedded firmware. *Id.* Specifically, these were Google Android Wear in 2012,[1] Samsung Tizen in 2014,[2] and Apple Watch OS in 2015,[3] all of which were developed years after the invention of the ’033 Patent. *Id.* At the time of the invention of the ’033 Patent, developers only had several small footprint real time operating systems available to them. *Id.* Specifically, TinyOS, a free BSD licensed real time Unix that had been developed for over 11 years, targeted low resource devices. *Id.* (citing Ex. 2005, available at http://www.tinyos.net/; Ex. 2006, available at https://en.wikipedia.org/wiki/TinyOS. Ex. 2007, available at https://www.usenix.org/system/files/conference/osdi12/osdi12-final-183.pdf). However the largest draw on the operating systems was the RAM and storage in microcontrollers, which made it impractical to embed, such an OS into a watch. *Id.*

[1] Ex. 2010, available at https://en.wikipedia.org/wiki/Wear_OS
[2] Ex. 2011, available at https://en.wikipedia.org/wiki/Tizen
[3] Ex. 2012, available at https://en.wikipedia.org/wiki/WatchOS

As Philip Levis describes, a POSITA would have known that TinyOS would have to be customized to an inordinate extent to fit into a watch processor. *Id.* (citing Ex. 2007).

Thus, defining a POSITA as one having 2-3 years of experience with design, development, and testing experience with mobile devices is incorrect since, in 2010, the processes and considerations for the claimed wristwatches were considerably different. Ex. 2004, ¶ 46.

B. Petitioner's Expert Is Not a POSITA and the Board Should Give Dr. Bederson's Declaration No Weight

The Board should give no weight to the testimony of Dr. Bederson because he does not qualify as a POSITA. "To offer expert testimony from the perspective of a skilled artisan in a patent case . . . a witness must at least have ordinary skill in the art." *Kyocera Senco Indus. Tools Inc. v. Int'l Trade Comm'n*, 22 F.4th 1369, 1376-77 (Fed. Cir. 2022). Otherwise, "the witness' opinions are neither relevant nor reliable." *Id.* at 1377. Under a proper definition of POSITA as put forth by Patent Owner, Dr. Bederson fails that test. *See Unified Pats., LLC v. AK Meeting IP LLC*, IPR2022-01142, Paper 20, at 19-20 (P.T.A.B. Jan. 5, 2024) (giving "no weight to the testimony" of patent owner's witness as to claim construction and obviousness because he was "not evidenced to have ordinary skill in the art").

While meeting the educational requirements for a POSITA, Dr. Bederson lacks sufficient relevant practical experience. According to Dr. Bederson, "the '033 patent is directed to simulating mechanical ***watch*** movement on the electronic display of a ***wristwatch***." Ex. 2003, 27:8-18 (emphasis added). However, Dr. Bederson has had no experience in the research, design, development, or testing of touchscreen applications and graphical user interfaces for small wearables, like wristwatches. *See generally id.*, 18:15-25:10, 24:14-19 ("Q Have you ever designed a touchscreen application for a wristwatch? A I have designed touchscreen applications for a wide range of small mobile devices including iPod Touches from Apple in the 2000s."). Dr. Bederson's only experience is in the field of mobile devices, which, as noted above, contained very different components than small wearables like wristwatches due to the differential in computing power, operating systems, and physical space for components. *See supra* Section V.A. Moreover, Dr. Bederson admitted that none of his engineering experiences involved small wearable devices outside of his experiences using such devices for personal use. *Id.*, 24:4-13 ("Q. Do you have any experience related to touchscreen applications for wristwatches? A Well, as a professional in the design and development and analysis of graphical user interfaces for all devices, I examine and consider and study really all electronic interfaces that I use. I've used touchscreen watch interface myself for a number of years, so at least in that context I have studied and thought about

graphical user interfaces on watches."), 24:21-24 ("I guess it depends on exactly how you define wristwatch, but I certainly have defined interfaces for touchscreen devices that I wore on my arm, so at least in that way I have."), 25:7-10 ("I certainly have tested my touchscreen on the watch that I wear personally that supports my professional understanding.").

In contrast, Mr. Blackadar has decades of substantial and relevant work experience with small wearables like wristwatches. *See* Ex. 2004, ¶¶ 2-16, Exhibit A.

VI. REQUIREMENTS UNDER 35 U.S.C. § 103

The question of obviousness is resolved on the basis of underlying factual determinations, including: (1) the scope and content of the prior art, (2) any differences between the claimed subject matter and the prior art, (3) the level of skill in the art, and (4) where in evidence, so called secondary considerations. *Graham v. John Deere Co. of Kansas City*, 383 U.S. 1, 17–18 (1966). Failure to identify the differences between the claimed subject matter and the prior art is fatal to an obviousness challenge. *See Apple, Inc. v. Contentguard Holdings, Inc.*, IPR2015-00355, Paper 9 at 9-10 (P.T.A.B. June 26, 2015).

To arrive at obviousness, the Board must sufficiently explain and support the conclusions that the prior art references disclose all the elements recited in the Challenged Claims and a relevant skilled artisan not only could have made but would

have been motivated to combine all the prior art references in the way the patent claims. *Pers. Web Techs., LLC v. Apple, Inc*., 848 F.3d 987, 994 (Fed. Cir. 2017).

Even if all the claim elements are found across a number of references, an obviousness determination must consider whether a *POSITA* would have been motivated to combine those references. *Intelligent Bio-Sys., Inc. v. Illumina Cambridge Ltd*., 821 F.3d 1359, 1368 (Fed. Cir. 2016); *Los Angeles Biomedical Rsch. Inst. at Harbor-UCLA Med. Ctr. v. Eli Lilly Co*., 849 F.3d 1049, 1067 (Fed. Cir. 2017).

The Supreme Court explained in *KSR Int'l Co. v. Teleflex Inc.* that "[o]ften, it will be necessary for a court to look to interrelated teachings of multiple patents; the effects of demands known to the design community or present in the marketplace; and the background knowledge possessed by a person having ordinary skill in the art, all in order to determine whether there was an apparent reason to combine the known elements in the fashion claimed by the patent at issue. To facilitate review, this analysis should be made explicit." 550 U.S. 398, 418 (2007). This combination determination, as supported by an articulated motivation to combine, requires a plausible rationale as to why those prior art references would have worked together. *Broadcom Corp. v. Emulex Corp*., 732 F.3d 1325, 1335 (Fed. Cir. 2013). Additionally, "knowledge of a problem and motivation to solve it are entirely different from motivation to combine particular references." *Innogenetics, N.V. v.*

Abbott Lab'ys., 512 F.3d 1363, 1373 (Fed. Cir. 2008).

VII. PETITIONER HAS NOT PROVED INVALIDITY OF THE CHALLENGED CLAIMS BY A PREPONDERANCE OF THE EVIDENCE

As set forth below, and in view of both the Petition ("Paper 3" or "Pet.") and the Board's Institution Decision ("Paper 13" or "Inst."), Petitioner has failed to demonstrate by a preponderance of the evidence that the Challenged Claims are obvious in view of the asserted prior art.

A. Ground 1: Claims 1 and 11-14 Aare Not Obvious Over the Combination of Mooring in View of Satoshi

1. A Person of Ordinary Skill in the Art Would Not Be Motivated to Combine Wristwatch Embodiments with Embodiments Specific to Mobile Devices or Larger Devices

A POSITA would not be motivated to combine Mooring and Satoshi to teach the claimed invention at least because a POSITA would not combine a reference disclosing processors for a mobile phone application with a reference related to wristwatches to teach a wristwatch microcontroller at the time of the invention of the '033 Patent. Ex. 2004, ¶ 47; *See infra* Section VII.A.1(a).

For example, Satoshi is not directed to wristwatches and focuses exclusively on an animation application of a mobile phone. Ex. 2004, ¶ 48; Ex. 1007, [0004] ("a program for displaying an animation of interactively operable gears of any number for mobile phone users to arrange and display in a plurality of combinations").

Petitioner's expert's rationale for a POSITA's motivation to combine a reference for ***mobile phone applications*** with a wristwatch reference to teach the claimed wristwatch is flawed because Dr. Bederson incorrectly assumes that, at the time of the invention of the '033 Patent, there was such a thing as "standard microprocessors" and "standard LCD screens" that "are interchangeable" between wristwatches and mobile devices. Ex. 2004, ¶ 49; Pet. at 25 (citing Ex. 1002, ¶¶ 57-63, 64-68, 130). Not only is this statement incorrect, but Petitioner's citations to Dr. Bederson's Declaration do not stand for that proposition. Ex. 2004, ¶ 49.

(a) Dr. Bederson's Claim that Wristwatch and Mobile Device Microcontrollers for Mechanical Simulation Are Interchangeable Is Unsupported

As noted above, Petitioner relies on several paragraphs of Dr. Bederson's Declaration for the proposition that microprocessors were interchangeable between wristwatches and mobile devices. Pet. at 25; Ex. 2004, ¶ 50. None of these paragraphs supports Dr. Bederson's opinion.

First, Ex. 1002, ¶¶ 57-63 merely shows that at the time of the invention, wristwatches could have basic touchscreens. Ex. 2004, ¶ 51.

Second, Ex. 1002, ¶¶ 64-68 show that "by the mid-2000s that one could simulate and display various mechanical designs and processes on a digital interface using computer-aided design (CAD) tools" and that "[m]any of these simulations were even made available to the public in online databases." Ex. 2004, ¶ 52; Ex.

1002, ¶ 64. However, these paragraphs do not (and cannot) show that such simulations of watch components were ***on a wristwatch itself***, which would not nearly have enough computing power to support CAD tools or online access to public databases. Ex. 2004, ¶ 52.

Third, Ex. 1002, ¶ 130 is merely a conclusory statement that "[a] POSITA would have had a reasonable expectation of success in combining Mooring and Satoshi because they would have understood that different watch or clock format displays are interchangeable and both use similar conventional processors and displays" with no further citations or evidentiary support. Ex. 2004, ¶ 53. This blanket statement is wrong, as described below. *Id.*

(b) Dr. Bederson's Claim that Wristwatch and Mobile Device Microcontrollers for Mechanical Simulation Are Interchangeable Is Incorrect

The '033 Patent describes and aims to solve the problem that, at the time of the invention, microcontrollers for wristwatches could not be compared to or combined with microcontrollers for mobile phones or other larger computing devices because of the size and power consumption limitations that are particular to wristwatches. *Id.*, ¶ 54.

> The invention is also based on the observation that the computational power of the current watch microcontrollers (i.e. of microcontrollers of a size and with a power consumption compatible with a watchmaking application) enables a realistic simulation of

> a complex mechanical movement to be calculated and displayed in real time.

'033 Patent, 2:53-58; Ex. 2004, ¶ 54

As noted above, the mobile devices at the time of the invention, and the state of the art in low power silicon microcontrollers and support chips, such as the display controllers, the display technology available required separate engineering talent and expertise. Ex. 2004, ¶ 55; *see supra* Section V.A. Application developers for tablets, mobile devices, and personal computers all had multiple tools available to them to develop their applications. Ex. 2004, ¶ 55. The developers of watches had no such assistance in the operating systems, and most of these implementations were unique implementations, such as Tiny OS. *Id.* For further example, there were several large watch companies, such as Seiko and Timex, that provided the first application-like environment for watches in the late 1980s and 1990s. *Id.* (citing Ex. 2008, available at https://en.wikipedia.org/wiki/Timex_Datalink; Ex. 2009, available at https://en.wikipedia.org/wiki/File:Seiko_Data-2000,_The_First_Computer_Watch,_Circa_1983-1984,_LCD_Watch_with_Docking_Station_(8515983575).jpg). However, these watches were forced to leverage a personal computer and a serial interface, as in the Seiko Data-2000, and an optical interface in the Timex Datalink. *Id.*

A POSITA would have understood that even the disclosure of Satoshi admits that Satoshi was very concerned about the computational resources available for its application, in view of current mobile phones at the time of Satoshi:

> However, current mobile phones are in demand that enable long-time usage as a phone using the limited power of a battery and that are compact and lightweight, and there are hardware limits such as memory storage capacity and the processing capability of an arithmetic processing device, and Java for embedded devices used in mobile phones is set such that only limited arithmetic processing can be executed depending on the hardware mentioned above.

Id., ¶ 56; Ex. 1007, [0005].

A POSITA would have further understood that Satoshi aimed to resolve this issue by relying upon an Internet connection:

> The present applicants set out to develop, as content provided on a mobile phone having an internet connection environment, a program for displaying an animation of interactively operable gears of any number for mobile phone users to arrange and display in a plurality of combinations.

Ex. 2004, ¶ 57 (citing Ex. 1007, [0004]). A POSITA would have understood that Satoshi moved components of its Java applet to the Internet when his Java applet needed more memory, and therefore, the code size of such a Java implementation would be enormous. *Id.* Given the constraints of wristwatches at the time of the ’033 Patent in 2010, a POSITA would have realized that a Java implementation utilizing the Internet as memory to “display[] an animation of interactively operable gears of

any number for mobile phone users" would be impossible. *Id.* (citing Ex. 1007, [0004]).

Petitioner presents no evidence (and ignores any discussion) that a POSITA would reasonably succeed in combining Mooring and Satoshi in view of the differing size and power capabilities of microcontrollers between mobile phones and wristwatches as of the date of the '033 Patent invention. Pet. at 23-25; Ex. 2004, ¶ 58.

For at least these reasons, a POSITA would not have had a motivation to combine Mooring and Satoshi to teach a wristwatch microcontroller, let alone a reasonable expectation of success from combining Mooring and Satoshi to teach a wristwatch microcontroller that performs all the limitations of the '033 Patent claims. *Id.*, ¶ 59.

2. The Petition Does Not Show that the Combination of Mooring in View of Satoshi Discloses "*a microcontroller being arranged for reproducing on said electronic display the simulation of a mechanical watch movement comprising a gear train, said simulation being visible so as to indicate the time, said microcontroller being further arranged for synchronizing the displayed time by said displayed mechanical movement with that of said quartz oscillator*," as Required by Claim Element 1[d]

(a) Mooring Does Not Disclose "*a microcontroller being arranged for reproducing on said electronic display the simulation of a mechanical watch movement*," as Required by Claim Element 1[d]

A POSITA would have understood that Mooring does not disclose any "simulation of a mechanical watch movement," as Petitioner argues. *Id.*, ¶ 60; Pet. at 30.

Mooring discloses that "[e]xamples of an electronic movement may include a quartz movement with an analog or digital display." Ex. 1005, [0039]; Ex. 2004, ¶ 61.

However, Dr. Bederson's understanding of an analog display as a simulation of any kind is incorrect. Ex. 2004, ¶ 62. A POSITA would have understood that there is a distinction between an analog time display and a digital time display, and Mooring explains this distinction. *Id.* A POSITA would therefore have understood Paragraph [0039] of Mooring in light of the rest of Mooring's disclosure:

> Quartz movements may be automatic (a self-winding rotor mechanism) or battery powered. The majority of watches made today are equipped with electronic movements that feature an analog time display having rotating hands on a face or dial. Some watches may have both analog and digital time readouts for simultaneous display of different information.

Id. (citing Ex. 1005, [0003]). A POSITA would therefore understand that an analog time display is described as having physical rotating hands on a face or dial, while a digital time display is described as a time readout (*i.e.*, showing a numerical representation of time.). *Id.*

Without considering this pertinent portion of Mooring, the Board merely accepted the testimony of Dr. Bederson about what a POSITA would have understood based on one paragraph [0039] of Mooring. *Id.*, ¶ 63; *see* Inst., at 20 (citing Ex. 1002, ¶ 150) ("Mooring describes an embodiment that includes an analog display, in which the microcontroller displays on the touchscreen a simulation of the movement of hour and minute hands to indicate the time.").

In view of the explicit disclosure of Mooring, a POSITA would have understood that an analog time display of hour and minute hands is an actual mechanical movement, and not a simulation, regardless of the "examples of an electronic movement" disclosed in Paragraph [0039] of Mooring. Ex. 2004, ¶ 64.

(b) Satoshi Does Not Disclose the Claimed "*said microcontroller being further arranged for synchronizing the displayed time by said displayed [simulation of a] mechanical movement with that of said quartz oscillator*," as Required by Claim Element 1[d]

A POSITA would understand that Satoshi does not teach "***said microcontroller [is] further arranged for synchronizing***." *Id.*, ¶ 65. Satoshi only teaches that synchronization is done through manual user action and involvement. *Id.* As Petitioner admits, "Satoshi further teaches that ***the user can request*** to set the watch hands to "the current time . . . read from the clock function of the mobile phone." *Id.*; Pet. at 36 (citing Ex. 1007, ¶ 87) (emphasis added); *see also* Ex. 1002, ¶ 159 ("***the user request taught in Satoshi would synchronize*** the time displayed

by the watch hands") (emphasis added). Petitioner and Petitioner's expert mislead the Board when they fail to note Satoshi's further description of this "user [] request." Ex. 2004, ¶ 65. In the very same paragraph cited by Petitioner, Satoshi describes that a user ***manually*** adjusts the angles for the hour hand, minute hand, and second hand, to match the mobile phone's clock function:

> That is, ***based on an operation by the user***, the current time can be read from the clock function of the mobile phone 1, and corresponding to the hour, minute, and second that was read, ***a process is performed in which the hour hand 9a, the minute hand 9b, and the second hand 9c are respectively set to an angle*** for the current hour, an angle for the current minute, and an angle for the current second (steps S23, 24, and 25). Furthermore, each change operation can be repeated, but by operating the set key, the angles of the hands 9 are fixed and the process ends (step S26).

Id. (citing Ex. 1007, [0087] (emphasis added)).

The Board focuses its analysis on this paragraph alone and assumes that "based upon our understanding of the English language translation of Satoshi (Ex. 1007), we understand paragraph 87 as describing the user can set the clock time based upon the clock function of the mobile phone ***by operating the set key***." Inst., at 25; Ex. 2004, ¶ 66. In other words, the Board seems to have found that "this user-initiated action [of operating the set key] involves the microprocessor executing code to perform the synchronization." *Id.*

The Board ignores the paragraph that immediately follows which describes that a user enters an "editing mode," where the user rotates the hands to match the phone clock time. Ex. 2004, ¶ 67. After the editing mode, the rotation of the hands recommences in execution mode. *Id.* Satoshi's disclosure even notes that there "may be ***a long time***" or "***a big difference*** between a time when the editing mode is opened and a time on the clock when the hands 9 are adjusted," and therefore "angles of the hands 9 when changed ***will not match*** the time when the editing mode was opened, and the time cannot be set accurately." *Id.* (citing Ex. 1007, [0088] (emphasis added)). This "difference" is precisely because of delay between the user actions involved during editing mode and execution mode when the hands start rotating again:

> Note that when a time display is enabled using the hand 9a, the minute hand 9b, and the second hand 9c, in editing mode, editing is performed with rotation of the gears 7 in a stopped state (a state upon opening the editing mode in which rotation of the hands 9 is stopped), the execution mode is returned to, rotation of the hands 9 recommences, and when drawing the hands 9, the hands 9 advance to the current time and are redrawn. However, upon opening the editing mode, the clock can actually be seen, and it ***may be a long time until the angles of the hands 9 change, there may be a big difference between a time when the editing mode is opened and a time on the clock when the hands 9 are adjusted***, and even if the angles of the hands 9 when the editing mode is opened while the execution mode is opened advance to angles of the hands 9 based on the current time, ***angles of the hands 9 when changed will***

> ***not match the time when the editing mode was opened, and the time cannot be set accurately***.

Id. (citing Ex. 1007, [0088] (emphasis added). Therefore, any matching of time or synchronization between Satoshi's display's hands and gears and Satoshi's phone clock is performed through user action and involvement during an editing mode instead of a microcontroller. *Id.*

The Board's understanding of the "set key" is also flawed in view of the remaining disclosure of Satoshi. Satoshi mentions a user operating various set keys a total of 7 times in its disclosure. *Id.*, ¶ 68; *see generally*, Ex. 1007. As shown below, a POSITA would have understood that a set key finalizes or "sets" various selections:

> Note that selection of menu items is performed by operating the tenkey, and selection of menu items is performed using a set key, which are prescribed keys that are predetermined for the key inputting part 4.

Ex. 2004, ¶ 68 (citing Ex. 1007, [0067]).

> [W]hen a set key is operated, the gear 7 whose position was changed and the other gear 7 form a connected state.

Id. (citing Ex. 1007, [0073]).

> Furthermore, each changing operation can be repeated, but when a set key is operated to set an arrangement (step S3), the process ends.

Id. (citing Ex. 1007, [0076]).

> Each change operation can be repeated, but when a set key is operated, a color of a gear 7 is set and the process ends (step S11).

Id. (citing Ex. 1007, [0078]).

> Furthermore, each change operation can be repeated, but when the user operates the set key, the color and shape of the hand 9 are fixed and the process ends (step S14).

Id. (citing Ex. 1007, [0082]).

> Furthermore, the change operation can be repeated, but by operating the set key, the rotation rate is fixed and the process ends (step S20).

Id. (citing Ex. 1007, [0083]).

Even with respect to Paragraph [0087] of Satoshi, which the Board and Petitioner rely on, a POSITA would have understood that operating the set key results in a user definitively setting an angle for the current hour, minute, and second. *Id.*, ¶ 69. Operating the set key means that the angles are fixed and the process ends. *Id.* Satoshi then cites to Step S26 in a flow chart, which indicates user actions that set the angles for the simulated clock hands. *Id.* As the disclosure notes, it is possible for the user to conduct another "change operation" so as to change the angle of the hands. *Id.*

> [The] process is performed in which the hour hand 9a, the minute hand 9b, and the second hand 9c are respectively set to an angle for the current hour, an angle for the current minute, and an angle for the current second (steps S23, 24, and 25). Furthermore, each change operation can be

> repeated, but by operating the set key, the angles of the hands 9 are fixed and the process ends (step S26).

Id. (citing Ex. 1007, [0087]).

FIG. 10

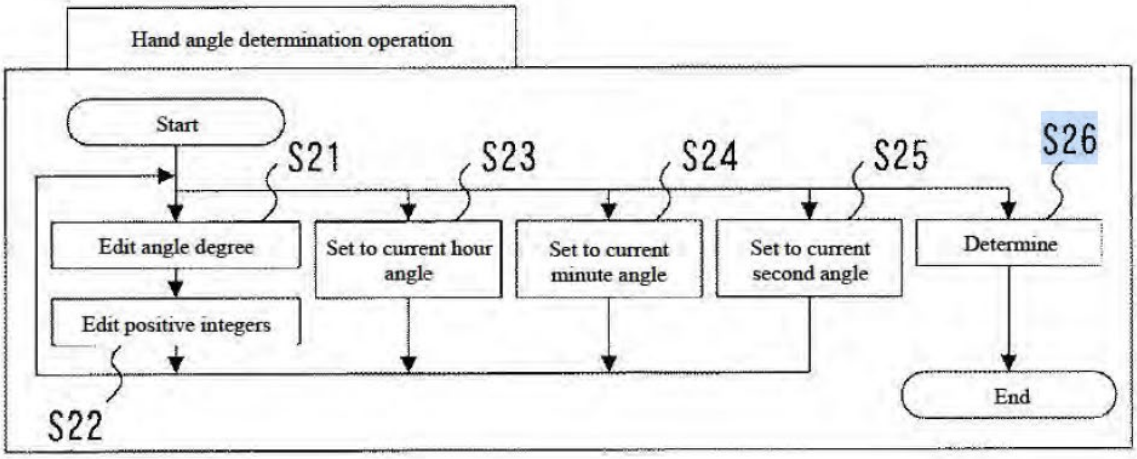

Id. (citing Ex. 1007, FIG. 10). In view of Satoshi's disclosure of Paragraph [0088] and of the user "operating a set key," it is evident that it is a user directly, and not a microcontroller, that performs "synchronizing the displayed time by said displayed [simulation of a] mechanical movement" with Satoshi's mobile phone clock. *Id.*

3. The Combination of Mooring in View of Satoshi Does Not Render Claims 11-14 Obvious

Claims 11-14 are dependent on Claim 1. *Id.*, ¶ 70. Therefore, Claims 11-14 are not rendered obvious by the combination of Mooring in view of Satoshi for at least the same reasons as Claim 1. *Id.*

4. The Combination of Mooring and Satoshi Does Not Render Obvious *"the wristwatch of claim 1, arranged for performing said synchronization periodically in an automatic manner*," as Required by Claim 11

As described above in Section VII.A.2, the microcontroller of either Mooring or Satoshi does not perform synchronization, let alone periodic synchronization. Ex. 2004, ¶ 71. The Petition cites to no relevant disclosure in Satoshi, other than the fact that a user, of his own volition, and recognizing that there will be inaccuracy over time, would manually perform a synchronization periodically. *Id.*; Pet. at 37 (citing Ex 1002, ¶¶165-166). A mere desire to keep accurate time does not amount to a disclosure in Satoshi, which explicitly describes that a user must manually synchronize in view of the discrepancy between the time a user reads from the clock function and the time that the user actually sets on the simulation. Ex. 2004, ¶ 71; *see* Ex. 1007, [0088] (indicating that there "may be ***a long time***" or "***a big difference*** between a time when the editing mode is opened and a time on the clock when the hands 9 are adjusted," and therefore "angles of the hands 9 when changed ***will not match*** the time when the editing mode was opened, and the time cannot be set accurately.") (emphasis added)).

Petitioner's expert, Dr. Bederson, also admits that there is no "synchronization [] in an automatic manner," periodically or otherwise, as required by Claim 11. *Id.*, ¶ 72 (citing Ex. 2003, 42:20-43:3 ("I don't think I used the term 'automatic

synchronization' because it would be at least in response to a user action.")).

At best, a POSITA could infer, from the disclosure of Satoshi, that a user may manually adjust the time on a periodic basis to match the actual clock function. *Id.*, ¶ 73. However, Claim 11 requires "said synchronization" is performed by the microcontroller *automatically*, and therefore the combination of Mooring and Satoshi does not render this claim obvious. *Id.*

5. The Combination of Mooring and Satoshi Does Not Render Obvious *"the wristwatch of claim 1, comprising means for entering and executing a request for said synchronization by the user*," as Required by Claim 12

Satoshi does not disclose a way for a user to enter and execute a request for synchronization. *Id.*, ¶ 74; *see supra* Section VII.A.2(b). A user merely reads the time from a clock function and attempts to synchronize its manual adjustment of simulated mechanical components (*i.e.*, hands, gears, etc.) to match that time from the clock function. Ex. 2004, ¶ 74. For example, a POSITA would have looked for any disclosure of commands passed from the user to a microcontroller, but none exist in Satoshi. *Id.*; *see generally*, Ex. 1007. Moreover, Petitioner's expert, Dr. Bederson, admitted that a user "directly interact[s] with the screen to adjust the time of the simulation.":

> Q Is it your understanding that Satoshi describes that a user can directly implement arranging gears and hands on a screen to match the desired time?

> A (Witness reviews document.)
> I address this issue about ***directly interacting with the screen to adjust the time of the simulation*** -- the time displayed by a simulation, in part, in my analysis of Ground 2. So, for example, in describing the '033 dependent Claim 2, I explain my opinion about a combination with prior art Lee where my paragraph 193 point to Figures 6 and 7 of Lee which directly support ***a user touching and moving a displayed hand on the screen to meet this limitation***. So for at least -- because I combined with Lee to show such a disclosure, ***I don't recall specifically having an opinion one way or another about whether Satoshi discloses that.***

Ex. 2004, ¶ 76 (citing Ex. 2003, 50:3-22) (emphasis added). A user's direct interaction to synchronize time is not entering and executing a request as required by the claim. *Id.*

6. The Combination of Mooring and Satoshi Does Not Render Obvious *"the wristwatch of claim 1, arranged for displaying said mechanical movement on the whole surface of the electronic display so as to occupy the position and the dimensions of a real mechanical movement*," as Required by Claim 13

Claim 13 requires that the mechanical movement must be displayed on the whole surface of the electronic display. *Id.*, ¶ 75. However, none of the embodiments of Satoshi disclose mechanical movements on the whole surface of the electronic display. *Id.* As shown below, and admitted by Petitioner, Satoshi includes a "bar on top (showing the batter) and the bar on bottom (showing "Menu" and "Exit"). *Id.*; Pet. at 40.

FIG. 5

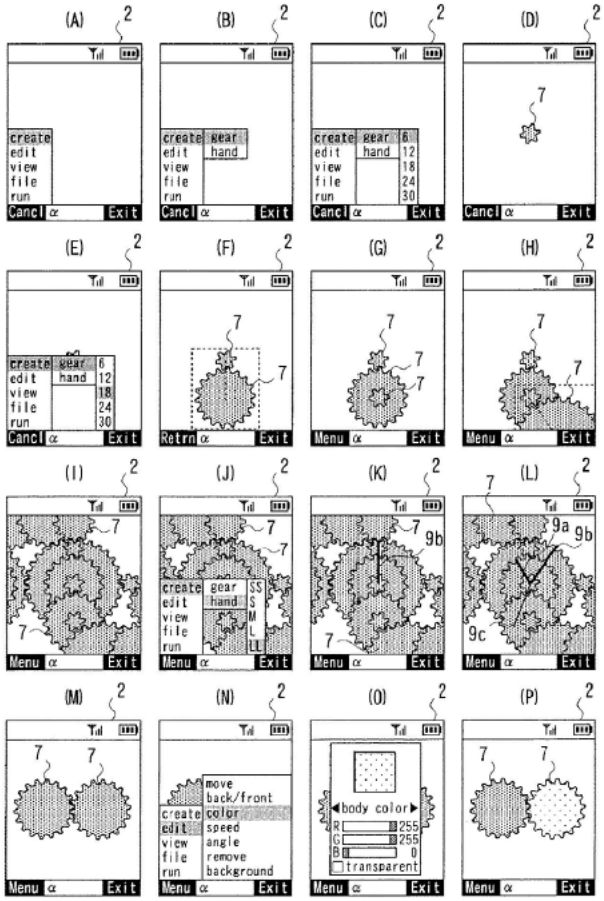

Ex, 2004, ¶ 75 (citing Ex. 1007, FIG. 5).

Merely stating that it would have been obvious to a POSITA to omit the batter and Menu and Exit bars does not make it so. *Id.*, ¶ 76; Pet. at 40 (citing Ex. 1002, ¶ 176). For example, a general desire to "make the clock hands and gear train larger and easier for users to see and to have fewer distractions (Ex. 1002, ¶ 176) does not change the technology and disclosure of Satoshi, which only discloses embodiments with a visible "Menu," "Exit," phone signal quality, and battery charge. Ex. 2004, ¶ 76.

A POSITA would have understood that there is a simple reason why Satoshi does not disclose the claimed "***displaying said mechanical movement on the whole surface of the electronic display.***" *Id.*, ¶ 77. Satoshi discloses a mobile device application that pulls mechanical elements from the Internet. *Id.* (citing Ex. 1007, [0003]). As described above, at the time of Satoshi, such applications drew a lot of power, even on mobile devices (let alone wristwatches), such that a user would need to be very cognizant of battery life. *Id.*; *see supra* Section VII.A.1(b).

Moreover, Satoshi explains that its application is meant to be adjustable whenever open (*i.e.*, the Menu must always be available) so that "a user [can] arbitrarily arrange[] gears in a combination on a mobile terminal such as a mobile phone." Ex. 2004, ¶ 78 (citing Ex. 1007, [0037]). Like any other mobile device application, a POSITA would understand that a user must also have the option to Exit the application, particularly when swipe movements to switch applications were not prevalent at the time of Satoshi. *Id.*

B. Ground 2: Claims 2-3, 17, and 19 Are Not Obvious Over the Combination of Mooring and Satoshi in Further View of Lee

Claims 2-3 are dependent on Claim 1 and are therefore not rendered obvious by Mooring and Satoshi in further view of Lee for at least the same reasons as Claim 1 noted for Ground 1. *Id.*, ¶ 79.

Claims 17 is not rendered obvious by Mooring and Satoshi in further view of Lee for at least the same reasons as noted for Ground 1, on which Petitioner's Ground 2 relies. *Id.*, ¶ 80.

Claim 19 is dependent on Claim 17 and is therefore not rendered obvious by Mooring and Satoshi in further view of Lee for at least the same reasons as Claim 17. *Id.*, ¶ 81.

C. Ground 3: Claims 13-16 Are Not Obvious Over the Combination of Mooring and Satoshi in Further View of Louch

1. The Combination of Mooring, Satoshi, and Louch Does Not Render Obvious Claims 13-16

Claims 13-15 are dependent on Claim 1. *Id.*, ¶ 82. Therefore, Claims 13-15 are not rendered obvious by Mooring and Satoshi in further view of Louch for at least the same reasons as Claim 1 noted for Ground 1 on which Petitioner's Ground 3 relies. *Id.*

Claim 16 is an independent claim, which is not rendered obvious by Mooring and Satoshi in further view of Louch, for at least the same reasons as noted for Ground 1 on which Petitioner's Ground 3 relies, and for the further reasons noted below. *Id.*, ¶ 83.

2. The Combination of Mooring, Satoshi, and Louch Does Not Render Obvious *"the microcontroller being specifically arranged for interpreting signals from the touch sensor, for selecting one screen from among several available screens depending on these signals, and for displaying this screen on the entirety of said display, said microcontroller being further specifically arranged so as to cause screens to scroll by in order to replace durably the screen displayed initially by another screen,"* as Required by Claim Elements 15[a] and 15[b] or "*said microcontroller being further arranged for interpreting signals from the touch sensor, for selecting one screen from among several available screens depending on these signals, and for displaying this screen on the entirety of said display, said microcontroller being further specifically arranged so as to cause screens to scroll by in order to replace durably the screen displayed initially by another screen,*" as Required by Claim Elements 16[f] and 16[g]

These limitations of Claims 15 and 16 require that a microcontroller can interpret touch sensor signals for selecting a screen among many screens. *Id.*, ¶ 84. The selected screen will be displayed on the entirety of the display. *Id*. The selecting of a screen is performed by "caus[ing] screens to scroll by" so that the user can make a selection that will replace the previous screen, and therefore, the new selection will also be displayed on the entirety of the display. *Id*.

These claim limitations, though slightly differently worded, were considered by this same Board in IPR2024-00002 under the same prior art reference, Louch (Ex. 1009). *Id*., ¶ 85. Specifically, the Board noted that Claim 1 of the '922 Patent (which has the same inventors as the '033 Patent) in that proceeding required "lastingly replace the initially displayed card with a replacement card," "wherein the

size of the image corresponds to the size of said digital matrix display so that the displayed card occupies the whole of said digital matrix display," and "wherein one card of said several available cards and occupying the entire digital matrix display is . . . replaced after the scrolling by a different card of said several available cards that occupies the entire digital matrix display." *Id*. (citing *Samsung Elecs. Co. v. Slyde Analytics LLC*, IPR2024-00002, Paper 13 (Decision Denying Institution of Inter Partes Review), at 12 (P.T.A.B. April 5, 2024)). As with Claims 15 and 16 of the '033 Patent, Claim 1 of the '922 Patent in IPR2024-00002 required "a card which occupies *the entire [] display* must, after the scrolling, be . . . replaced by a different card that *occupies the entire [] display*." *Id*. (citing *Samsung Elecs. Co.*, IPR2024-00002, Paper 13 at 14-15.

The Board unequivocally held that Louch's "open widget, however, does not occupy the entirety of the display" and Paragraph 67 of Louch, which Petitioner relies upon (Pet. at 50-51, 54) "does not discuss scrolling of widgets":

> The assertion that Louch teaches scrolling through widgets that occupy the entire display is not sufficiently persuasive. Paragraph 67 of Louch does not discuss scrolling of widgets. It is unsupported assertion that this sentence in paragraph 67 refers to the appearance of a widget during scrolling "The widget 402 can consume the entire display area or a portion thereof." Ex. 1005 ¶ 67. Rather, paragraph 87 specifically discusses scrolling and states that the user can touch the display of a device with one or more fingers and make a gesture in any direction "to scroll through open or closed widgets." *Id*. ¶ 87. An

> open widget, however, does not occupy the entirety of the display. Louch describes: "a widget can be opened in a user interface (e.g., in response to multi-touch input) and expanded to consume substantially all of the multi-touch-sensitive display area." *Id*. ¶ 81. Simply put, "substantially all" of a digital matrix display is not the same as "the entire digital matrix display."

Id., ¶ 86 (citing *Samsung Elecs. Co.*, IPR2024-00002, Paper 13 at 14-15. There is no reason here why the Board should hold differently here. *Id.*

Therefore, the combination of Mooring, Satoshi, and Louch fails to render obvious Claims 15 and 16. *Id.*, ¶ 87.

D. Ground 4: Claims 4-5 Are Not Obvious Over the Combination of Mooring and Satoshi in Further View of Inoue and Tam

1. A Person of Ordinary Skill in the Art Would Not Be Motivated to Combine Mooring and Satoshi with Inoue and Tam

Inoue "relates generally to a dial indicator display device for indicating information using analog hands or needle indicators." *Id.*, ¶ 88 (citing Ex. 1010, [0003]). The disclosure of Inoue describes that its movements, particular of hands are driven by a motor, and are not a simulation, let alone a combination of external stimulus to create a corresponding simulation on the display:

> The movement 40 controls driving the hands 30 (hour hand 31 and minute hand 32) and controls driving the display panel 20.
>
> …

> The drive means 42 includes a stepping motor 46 for driving the hands, and a wheel train 47 for transferring output from the stepping motor 46 to the hour hand 31 and minute hand 32.

Id. (citing Ex. 1010, [0120]-[0122]).

To the extent that Inoue discloses an LCD display as Petitioner alleges (Pet. at 63), the digital display is unrelated to a simulation of mechanical movements or components. *Id.*, ¶ 89. Rather, the display would only include date information, a schedule, a to-do list, etc.:

> In FIG. 1 and FIG. 4 the date information including the year, month, and day of the current date is displayed. The display panel drive circuit 414 updates the date display on the display panel 20 once a day. The displayed information can be adjusted using the crown 451 or buttons 452 and 453, for example. The buttons, for example, can be operated to change the information displayed on the display panel 20 to various other types of time information, including the day of the week, the current time (hour, minute, second), or world time information including the name of a city in a different time zone and the current time in that city. Other information, such as a schedule, a to-do list, or an address book, can also be displayed if the combination timepiece 1 includes the functions of a PDA (personal digital assistant), for example.

Id. (citing Ex. 1010, [0159]).

Further, taken in context, the disclosure of Inoue was patented in 2007 by Seiko, one of the largest watch vendors. *Id.*, ¶ 90. In 2007, a POSITA would have known that Seiko watches did not contemplate incorporating simulations on a

display based on user interaction with external components, such as a crown stem. *Id.*

Therefore, a POSITA would not have been motivated to combine a reference like Inoue that has nothing to do with simulated mechanical components and only corresponds to motor driven hands or dials with respect to actual timekeeping with references that discuss simulations, like Satoshi or Tam, described below. *Id.*, ¶ 91.

Tam "present[s] a study on the physical-based models of the Graham Escapement and the Swiss Lever Escapement. It can be used for educational purposes, by which students and the general public can learn the basics of mechanical watches / clocks. It can also be used for industry purpose, by which watchmakers can optimize their designs." *Id.*, ¶ 92 (citing Ex. 1012, 2).

To provide greater insight into Tam's disclosure, Tam wrote a thesis that "presents a Virtual Library of Mechanical Timepieces. The Virtual Library is an online database containing different kinds of mechanisms used in mechanical watches *I* clocks. It uses 3-dimension (3D) Computer-Aided Design (CAD) models to demonstrate the working of these mechanisms. The Virtual Library provides an educational tool for various people who are interested to mechanical timepieces, including engineering students (university students and vocational school students), watchmakers, designers, and collectors. In addition, the CAD models are drawn to

exact dimensions. As a result, it can be used by watchmakers to validate their designs." *Id.*, ¶ 93 (citing Ex. 1015, ii).

First, a POSITA would have understood that Tam describes simulating the interactions between "actual" components rather than the combination of an actual component on the outside, such as a crown, with simulated mechanical components on a display. *Id.*, ¶ 94.

Second, Tam does not disclose implementing its simulations on the wristwatch itself. *Id.*, ¶ 95. Based on Tam's thesis, its simulations are made possible through complex CAD models to validate designs. *Id.* As noted above in Section V.A and VII.A.1, ***wristwatches*** would not nearly have enough computing power to support CAD tools or online access to public databases. *Id.*

Petitioner's expert, Dr. Bederson, simply ignores these two points. *Id.*, ¶ 96. Rather he testifies that merely the presence of physical inputs and the simulation teachings of Tam and Satoshi would be enough to cause an interaction between external components and a corresponding simulated display on a wristwatch with limited power and no access to online databases or CAD tools:

> [O]nce you have a device that has these physical inputs, such as a stem or a push button, and those are connected up to the system so that the microcontroller can receive data indicating user interaction with those -- with that crown and push button, then I think it would be well within the skill of a POSITA to use the teachings of the various simulations, for example, by Satoshi and Tam, to take

> those inputs and impact or use those inputs in the simulation to cause an action or direct action to that simulation.

Id., ¶ 96 (citing Ex. 2003, 57:2-18). A POSITA would not have understood there to be a motivation to combine Mooring, Satoshi, Inoue, and Tam with nothing other than Dr. Bederson's simplistic (and incorrect) rationale. *Id.*

Therefore, a POSITA would not be motivated to combine the teachings of Tam with any wristwatch reference, including those of Mooring or Inoue, because Tam's simulations are technically impossible and do not relate to a mixture of external components and simulated display based on interaction with external components. *Id.*, ¶ 97.

2. The Combination of Mooring, Satoshi, Inoue, and Tam Does Not Render Obvious Claims 4-5

3. Claims 4-5 are dependent on Claim 1. *Id.*, ¶ 98. Therefore, Claims 4-5 are not rendered obvious by Mooring and Satoshi in further view of Inoue and Tam for at least the same reasons as Claim 1 noted for Ground 1, on which Petitioner's Ground 4 relies. *Id.*The Combination of Mooring, Satoshi, Inoue, and Tam Does Not Render Obvious *"a crown stem being displayed on said display opposite said crown, the position of said displayed crown stem being modified by said microcontroller when said microcontroller detects that said crown has been actuated, so as to simulate a direct action by said crown on said displayed crown stem*," as Required by Claim 4

Claim 4 requires "a crown stem being displayed on said display opposite said crown." *Id.*, ¶ 99. A POSITA would have understood that to mean that there is a

physical crown and a simulated crown stem on the display. *Id.*

Petitioner only relies on Inoue for disclosing a "crown [that] can be used to adjust the information displayed on the LCD display of the wristwatch" and Tam for its "teaching to simulate and display internal watch components to the crown of Inoue." *Id.*, ¶ 100; Pet. at 67-68.

As Petitioner admits, Inoue discloses that a crown may adjust information. Ex. 2004, ¶ 101. As FIG. 1 of Inoue shows, Inoue discloses no simulated mechanical component opposite of the crown:

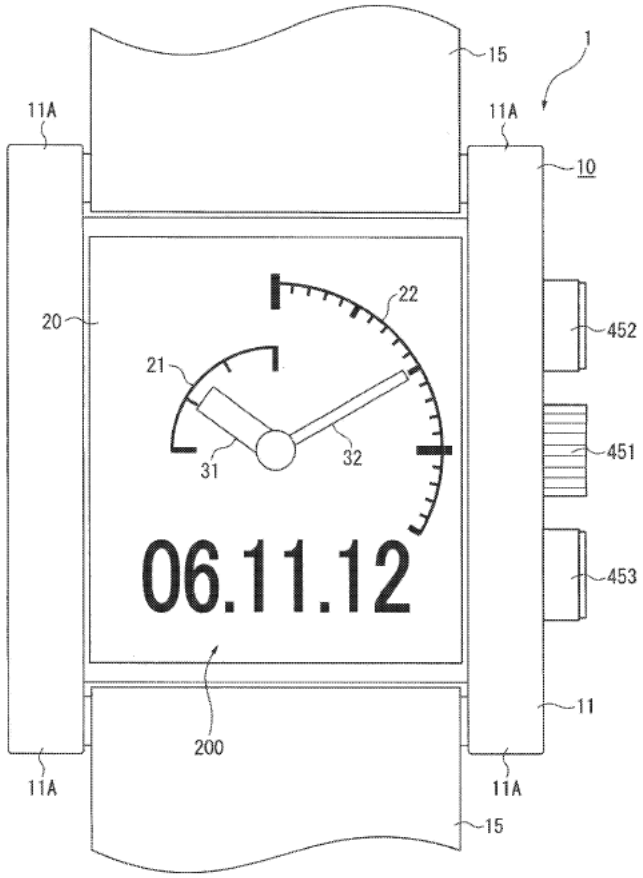

FIG. 1

Id. (citing Ex. 1010, FIG. 1).

Further, as noted in Section VII.D.1, Tam merely discloses simulations of actual components so that a designer or student would understand how the actual mechanical components interact. *Id.*, ¶ 102. A POSITA would not understand Tam to suggest that a physical crown can interface with a simulated "crown stem being displayed on said display opposite said crown." *Id.*

Both Inoue and Tam are silent regarding both the claimed simulated "crown stem" and the claimed "position of said displayed crown stem being modified by said microcontroller when said microcontroller detects that said crown has been actuated." *Id.*, ¶ 103.

4. The Combination of Mooring, Satoshi, Inoue, and Tam Does Not Render Obvious *"an element displayed on said display opposite said push-button, the position of said element being modifiable by said microcontroller when said microcontroller detects that said push-button has been actuated, so as to simulate a direct action by said push-button on said displayed element*," as Required by Claim 5

Claim 5 requires "an element displayed on said display opposite said push-button." *Id.*, ¶ 104. A POSITA would have understood that the claim requires a physical push-button and a simulated element on the display opposite of the button. *Id.*

Petitioner only relies on Inoue for disclosing a "buttons [that] can be used to adjust the information displayed on the LCD display of the wristwatch" and Tam for its "teaching to simulate and display internal watch components to the crown[4] of Inoue." *Id.*, ¶ 105; Pet. at 70-71.

As Petitioner admits, Inoue discloses that a push-button may adjust information. Ex. 2004, ¶ 106. As FIG. 1 of Inoue shows, Inoue discloses no

[4] Patent Owner assumes this is a typo and "crown" is meant to be "push-button."

simulated mechanical element opposite of the crown:

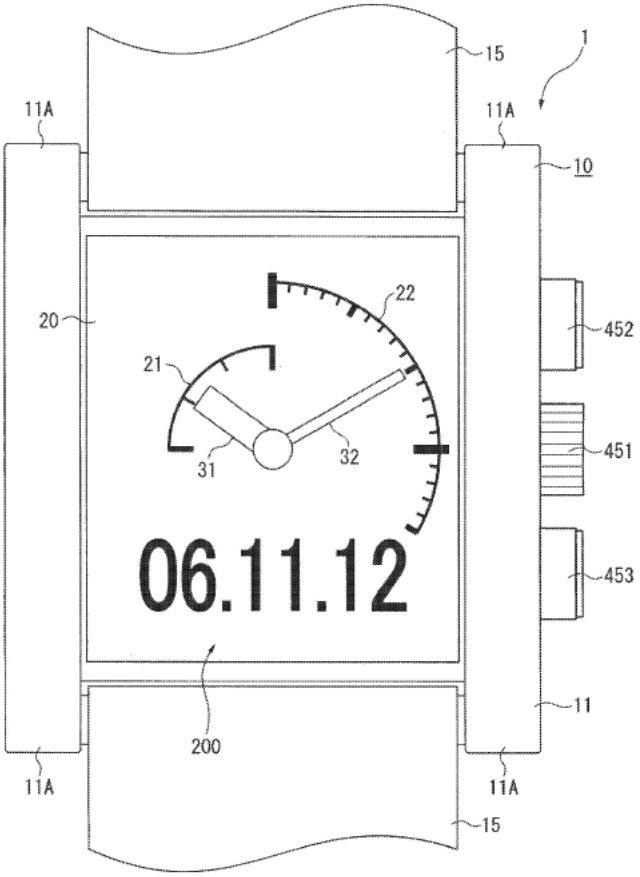

FIG. 1

Id. (citing Ex. 1010, FIG. 1).

Further, as noted in Section VII.D.1, Tam merely discloses simulations of actual components so that a designer or student would understand how the actual mechanical components interact. *Id.*, ¶ 107. A POSITA would not understand Tam to suggest that a physical push-button can interface with a simulated "element displayed on said display opposite said push-button." *Id.*

Both Inoue and Tam are silent regarding both the claimed simulated "element" and the claimed "the position of said element being modifiable by said microcontroller when said microcontroller detects that said push-button has been actuated, so as to simulate a direct action by said push-button on said displayed element." *Id.*, ¶ 108.

E. Ground 5: Claims 6-10 and 13 Are Not Obvious Over the Combination of Mooring and Satoshi in Further View of Tam and Ruchonnet

1. A Person of Ordinary Skill in the Art Would Not Be Motivated to Combine Mooring and Satoshi with Tam and Ruchonnet to Disclose Claims 6-10 and 13

As noted above, there is no motivation to combine Tam with Mooring and Satoshi because Tam is directed to the simulation of mechanical watches and clocks using complex assistance like CAD so that watch designers can ensure mechanical parts work properly and meet any design specifications. *Id.*, ¶ 109; *see supra* Section VII.D.1. There is no disclosure of simulation on the wristwatch itself, as the claims require. *Id.*

By Petitioner's own admission, Ruchonnet adds nothing more to the combination other than disclosing "a mechanical watch with various internal components." Ex. 2004, ¶ 110; Pet. at 73 ("additional internal components taught in Ruchonnet"). Petitioner does not cite to Ruchonnet anywhere else in its section on "[a] POSITA would have been motivated to combine Mooring and Satoshi's

teachings with the teachings of Tam and Ruchonnet and would have had a reasonable expectation of success" outside of restating the references in the combination. Ex. 2004, ¶ 110; Pet. at 72-76.

According to Petitioner, each of Claims 6-10 and 13 allegedly correspond to simulated versions of Ruchonnet's internal components, as displayed on a watch. Ex. 2004, ¶ 111; Pet. at 76-87. However, a POSITA would understand that the mere knowledge of various mechanical watch components that Petitioner admits Ruchonnet provides is not enough to use the simulations of Tam on a wristwatch. Ex. 2004, ¶ 111.

There is no motivation to combine Tam and Ruchonnet for another reason. *Id.*, ¶ 112. A POSITA would understand that each of Claims 6-10 and 13 describe detailed simulated mechanisms of mechanical watch movements. *Id.* However, Tam outrightly precludes such a disclosure:

> However, this simulation fails to show the detailed mechanism of mechanical watch movements. It shows only the movement of the escapements but it can not tell how the escapement is connected with the gears train and other components, such as hairspring, barrel, rotor etc.

Id. (citing Ex. 1015, 0021). The express disavowal of simulations with "detailed mechanism[s] of mechanical watch movements (particularly how certain components are "connected with the gears train. . .") teaches away from combining

Tam with Ruchonnet for the express purpose of simulating detailed mechanical movements involving gear trains, as claimed in Claims 6-10 and 13. *Id.*

2. The Combination of Mooring, Satoshi, in further view of Tam and Ruchonnet Does Not Render Obvious Claims 6-10 and 13

Claims 6-10 and 13 are dependent on Claim 1. *Id.*, ¶ 113. Therefore, Claims 6-10 and 13 are not rendered obvious by the combination of Mooring and Satoshi in further view of Tam and Ruchonnet for at least the same reasons as Claim 1 noted for Ground 1, on which Petitioner's Ground 5 relies. *Id.*

F. Ground 6: Claim 18 is Not Obvious Over the Combination of Mooring and Satoshi in Further View of Lee, Tam, Inoue, and Ruchonnet

Claim 18 is not rendered obvious by the combination of Mooring and Satoshi in further view of Lee, Tam, Inoue, and Ruchonnet for at least the same reasons as noted for Grounds 2, 4, and 5, which Petitioner's Ground 6 relies on. *Id.*, ¶ 114; Pet. at 87-88.

VIII. CONCLUSION

For the foregoing reasons, Patent Owner respectfully requests that the Board deny institution of the Petition in its entirety.

Respectfully submitted,

Dated: June 28, 2024 By: */ Peter Lambrianakos /*
Peter Lambrianakos (Reg. No. 58,279)
Lead Counsel for Patent Owner

FABRICANT LLP
411 Theodore Fremd Avenue,
Suite 206 South
Rye, New York 10580
Tel. 212-257-5797
Fax. 212-257-5517
Email: plambrianakos@fabricantllp.com

CERTIFICATE OF WORD COUNT

The undersigned hereby certifies that the portions of the above-captioned PATENT OWNER'S PRELIMINARY RESPONSE specified in 37 C.F.R. § 42.24 has 11,766 words in compliance with the 14,000 word limit set forth in 37 C.F.R. § 42.24. This word count was prepared using Microsoft Word for Office 365.

Respectfully Submitted,

June 28, 2024 By: */ Peter Lambrianakos /*

Peter Lambrianakos (Reg. No. 58,279)
Lead Counsel for Patent Owner
FABRICANT LLP
411 Theodore Fremd Avenue,
Suite 206 South
Rye, New York 10580
Tel. 212-257-5797
Fax. 212-257-5517

CERTIFICATE OF SERVICE

A copy of PATENT OWNER'S RESPONSE and EXHIBITS 2003 through 2012 have been served on Petitioner's counsel of record as follows:

William M. Fink
E-mail: tfink@omm.com
O'MELVENY & MYERS LLP
1625 Eye Street, NW
Washington, DC 20006

Benjamin M. Haber
E-Mail: bhaber@omm.com
Brian Cook
E-mail: bcook@omm.com
Nicholas Whilt
E-mail: nwhilt@omm.com
O'MELVENY & MYERS LLP
400 South Hope Street, 18th Floor
Los Angeles, California 90071

Jeff Baxter
E-mail: jbaxter@omm.com
O'MELVENY & MYERS LLP
2501 North Harwood Street, Suite 1700
Dallas, Texas 75201

Attorneys for Samsung Electronics Co., Ltd.;
Samsung Electronics America, Inc.

June 28, 2024

By: */ Peter Lambrianakos /*

Peter Lambrianakos (Reg. No. 58,279)
Lead Counsel for Patent Owner
FABRICANT LLP
411 Theodore Fremd Avenue,
Suite 206 South
Rye, New York 10580
Tel. 212-257-5797
Fax. 212-257-5517