US007228807B1

(12) **United States Patent**
VenHuizen

(10) **Patent No.: US 7,228,807 B1**
(45) **Date of Patent: Jun. 12, 2007**

(54) **DEVICE FOR IMPROVING THE SPACING BETWEEN SEEDS PLANTED BY A JOHN DEERE VACUUM PLANTER**

(76) Inventor: **Dale VenHuizen**, 1954 IL Route 78N, Stockton, IL (US) 61085

(*) Notice: Subject to any disclaimer, the term of this patent is extended or adjusted under 35 U.S.C. 154(b) by 0 days.

(21) Appl. No.: **11/392,055**

(22) Filed: **Mar. 29, 2006**

(51) **Int. Cl.**
A01C 7/00 (2006.01)
A01C 9/00 (2006.01)

(52) **U.S. Cl.** **111/174**; 111/185

(58) **Field of Classification Search** 111/170–189
See application file for complete search history.

(56) **References Cited**

U.S. PATENT DOCUMENTS

3,880,099 A * 4/1975 Houston et al. 111/200
3,905,313 A * 9/1975 Grether 111/200
4,034,784 A * 7/1977 Ball et al. 141/348
4,971,255 A * 11/1990 Conrad 239/650
5,984,635 A * 11/1999 Keller ..... 416/20 A
6,651,570 B1 * 11/2003 Thiemke 111/184

* cited by examiner

Primary Examiner—Christopher J. Novosad
(74) *Attorney, Agent, or Firm*—Robert L. Marsh

(57) **ABSTRACT**

A seed planter of the type having a metering unit with a seed chute that drops seeds into a seed tube for planting as manufactured by John Deere is provided with a deflector in the metering unit. The deflector directs the path of the seeds as they fall away from the seed disk so as to free fall along a vertical centerline between the leading and trailing walls of the seed tube and between the opposing sides thereof.

13 Claims, 8 Drawing Sheets

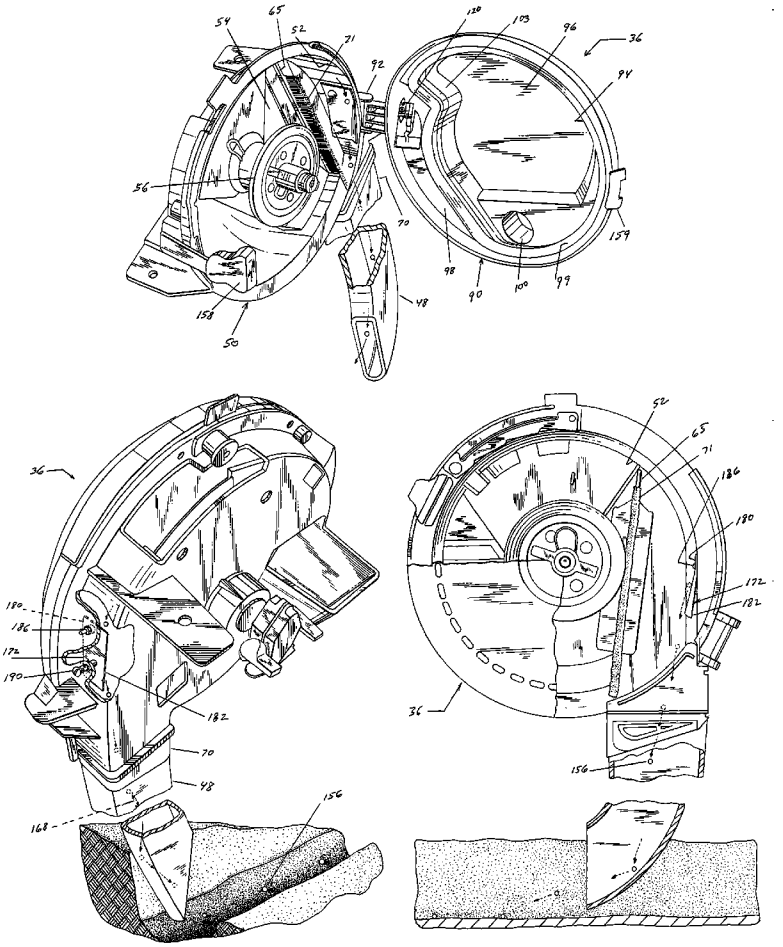

FIG. 1
PRIOR ART

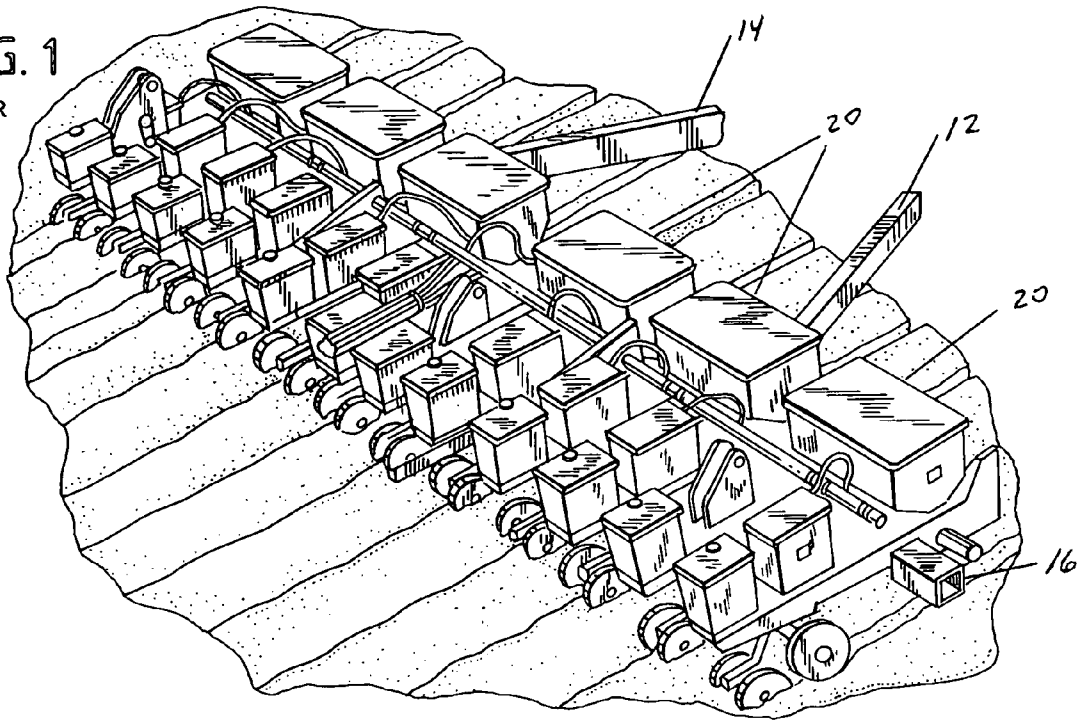

FIG. 2 PRIOR ART

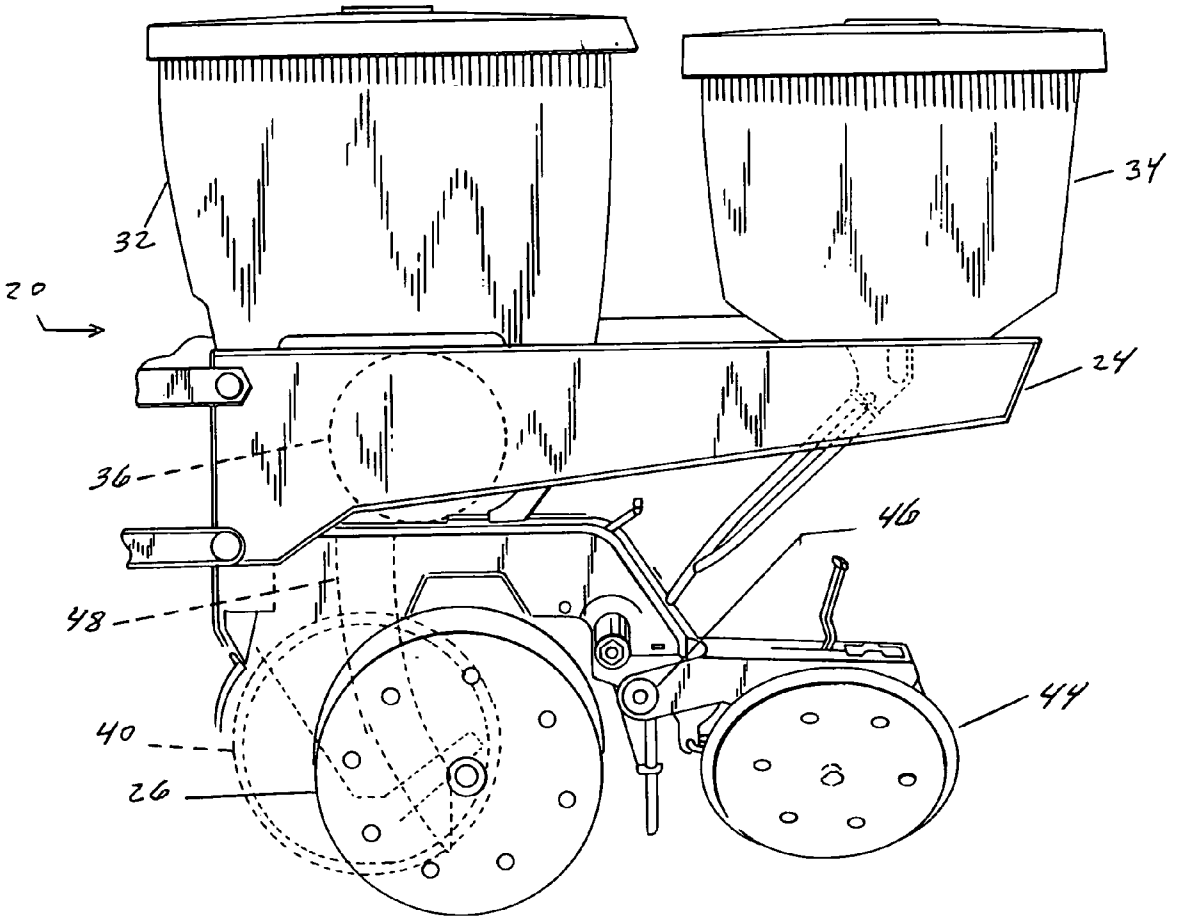

FIG. 3 PRIOR ART

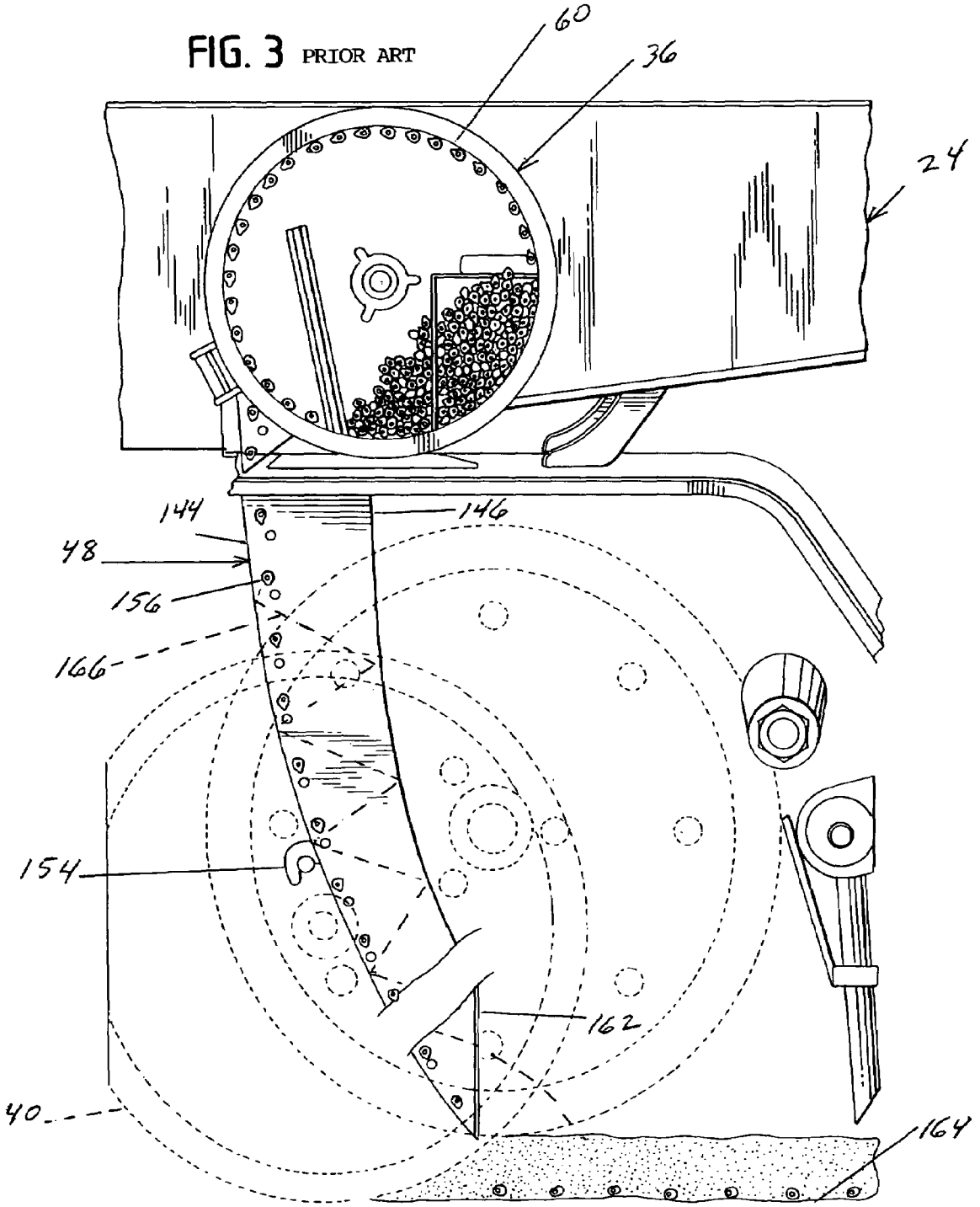

FIG. 4 PRIOR ART

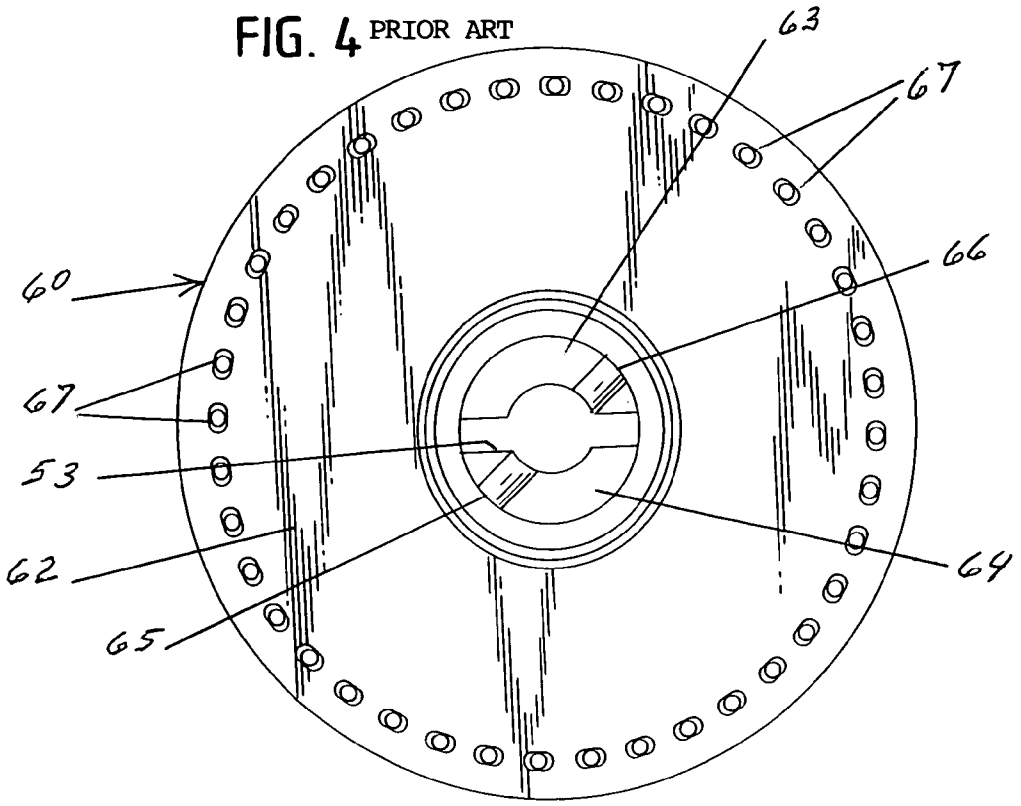

FIG. 5 PRIOR ART

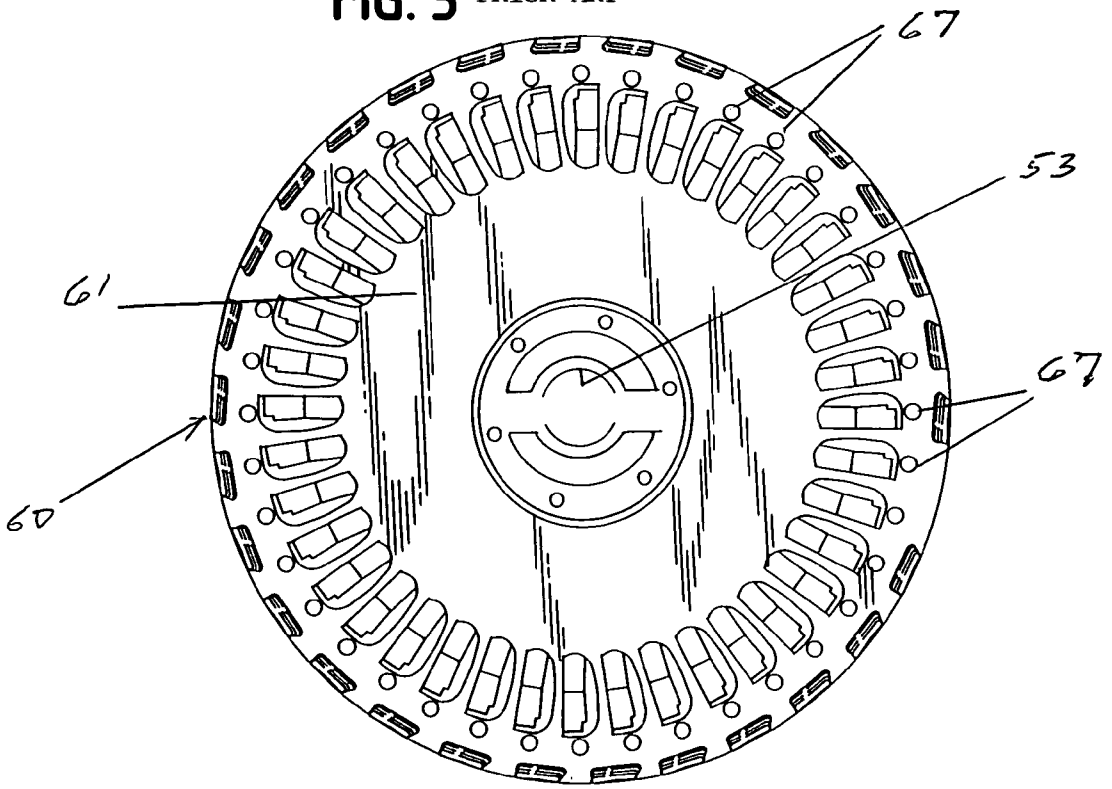

FIG. 6

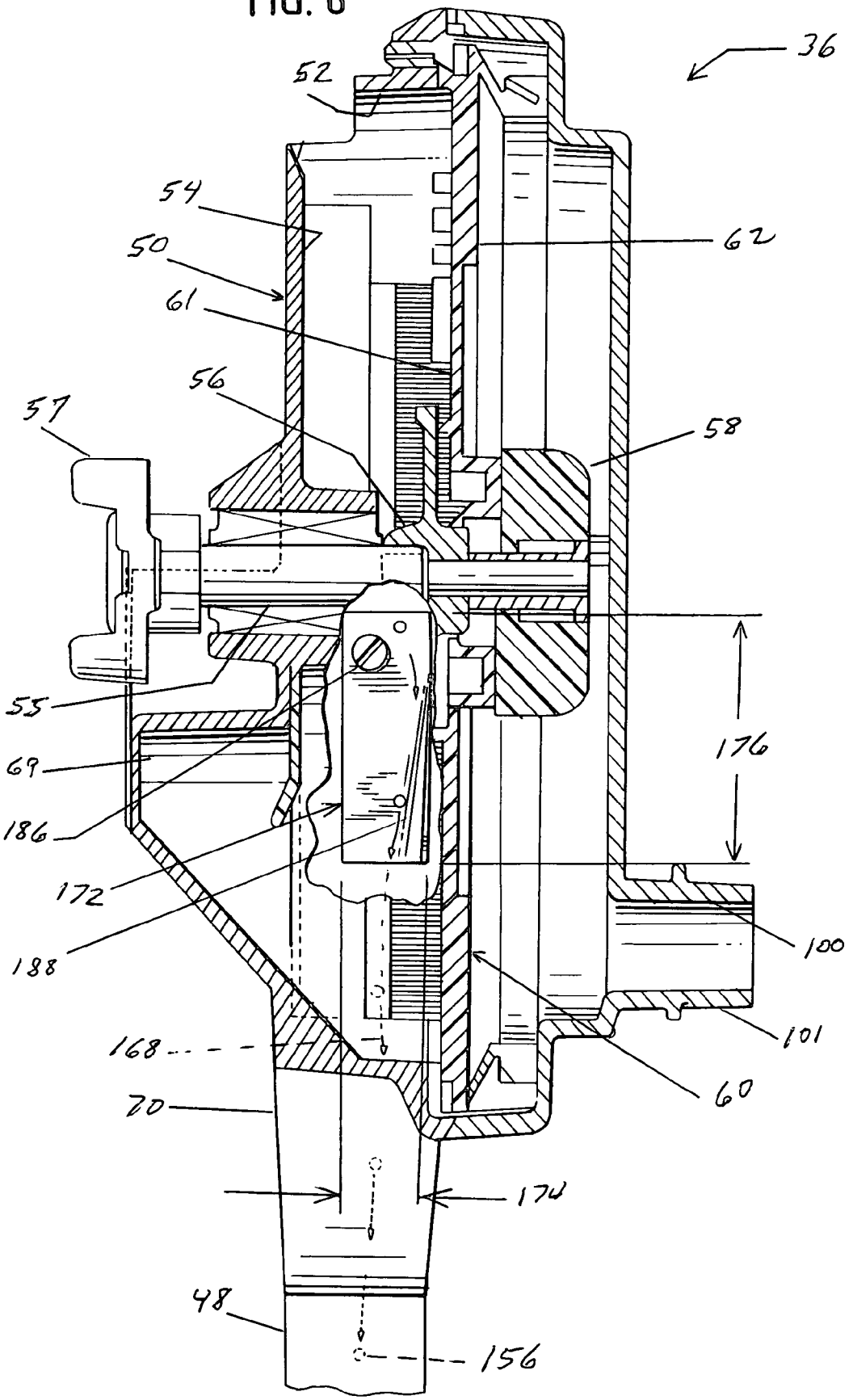
36
52
54
50
61
62
56
57
58
55
69
186
172
188
176
100
101
168
60
70
174
48
156

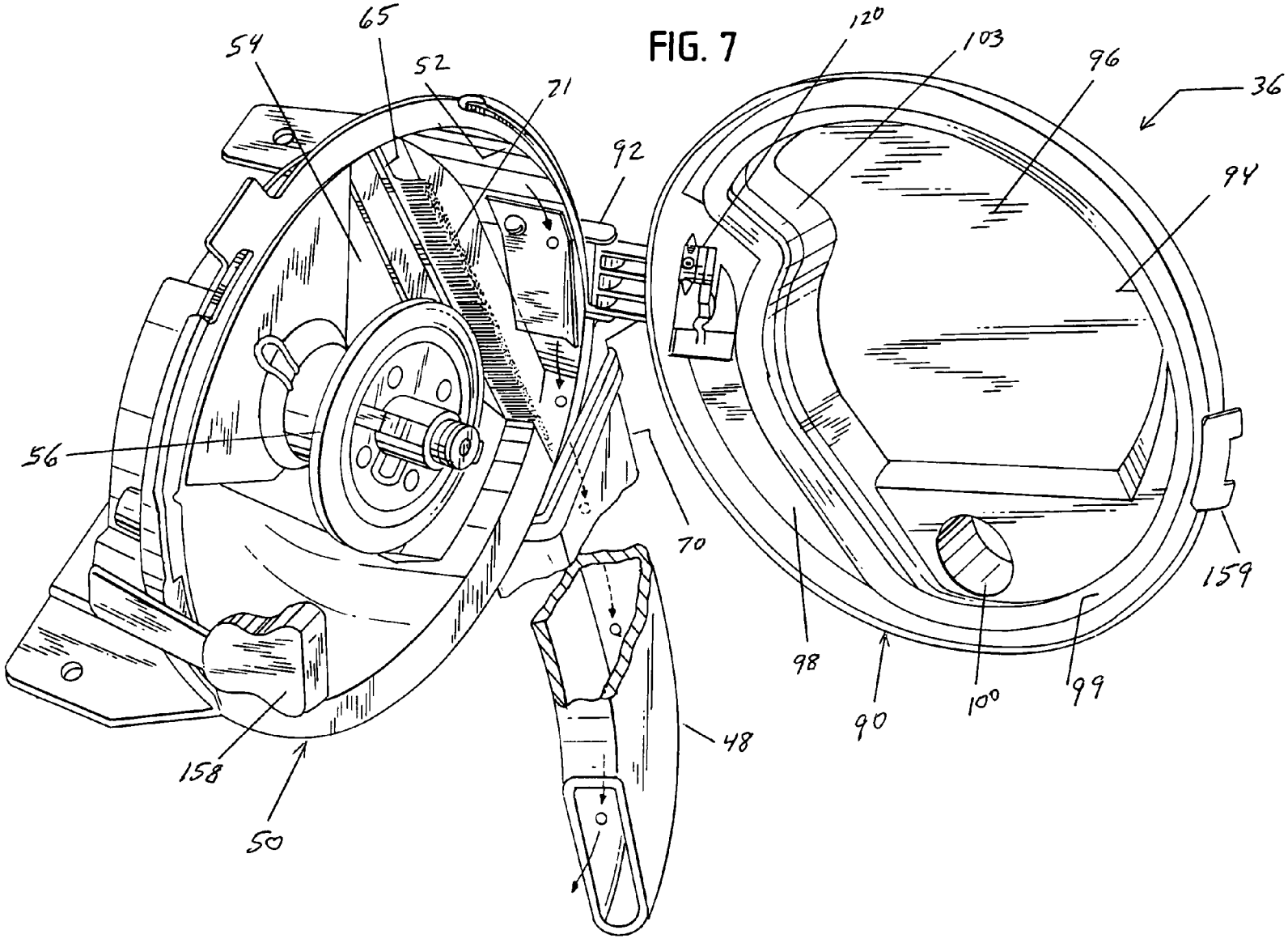

FIG. 7

FIG. 8

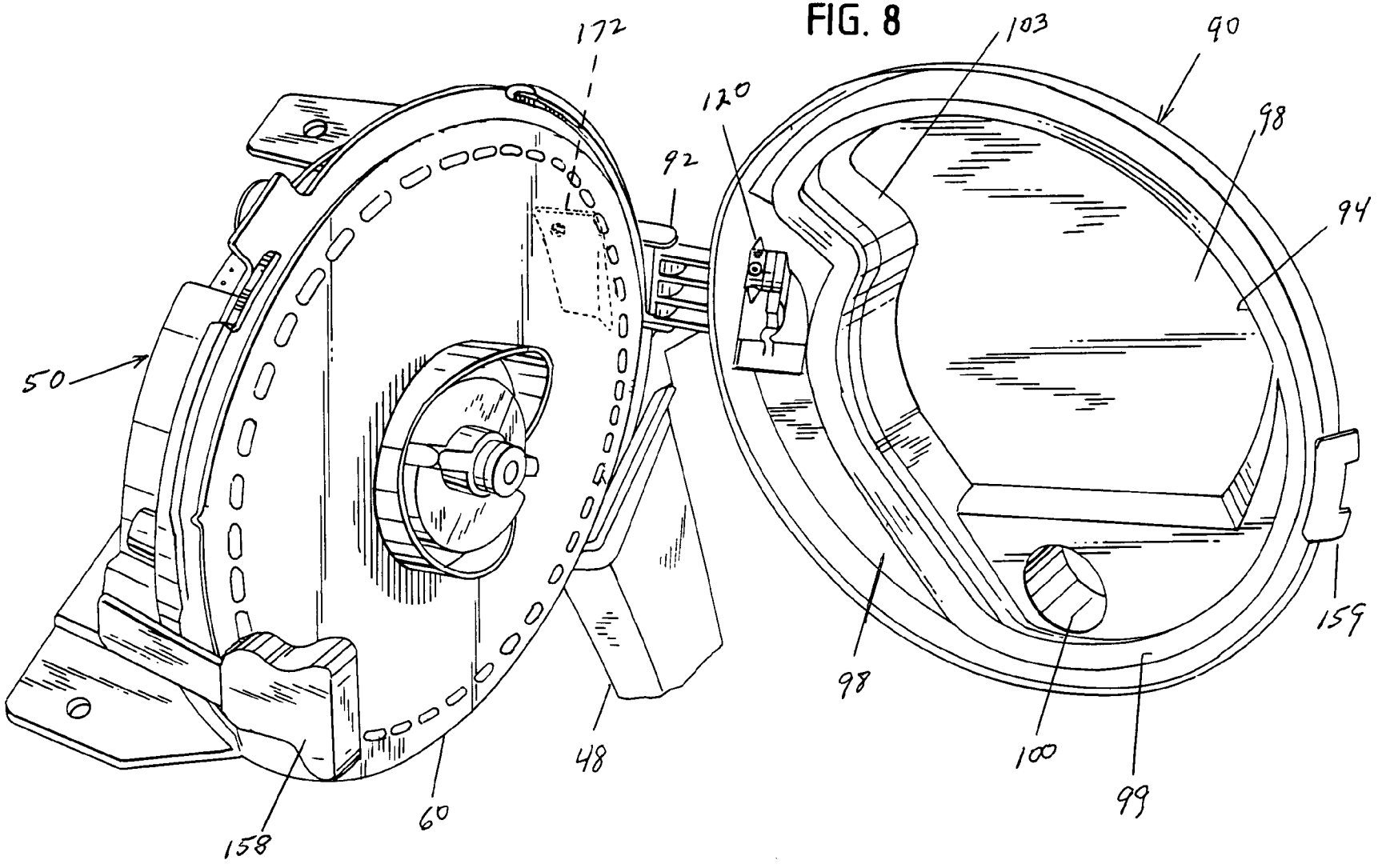

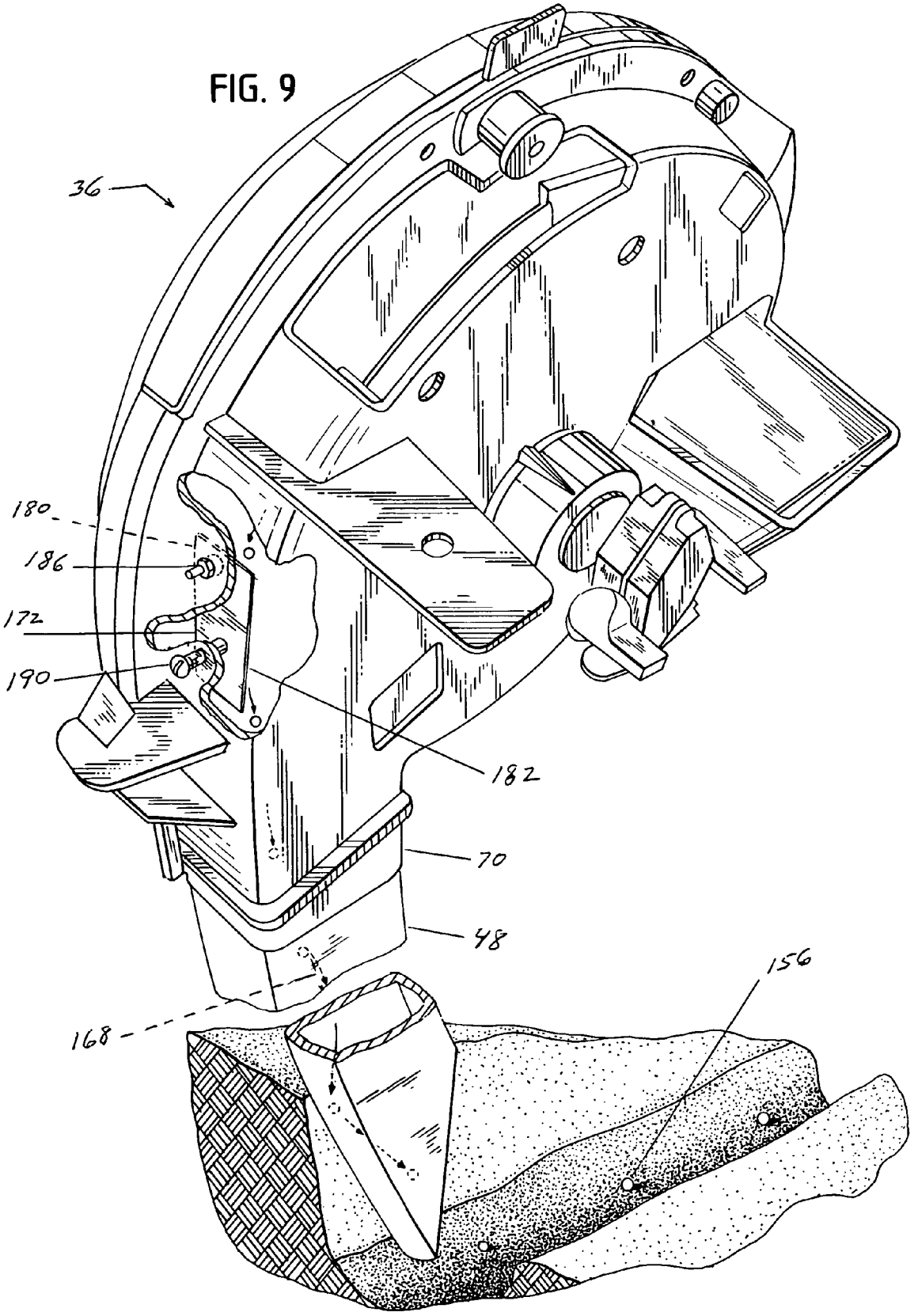
FIG. 9
36
180
186
172
190
182
70
48
168
156

FIG. 10

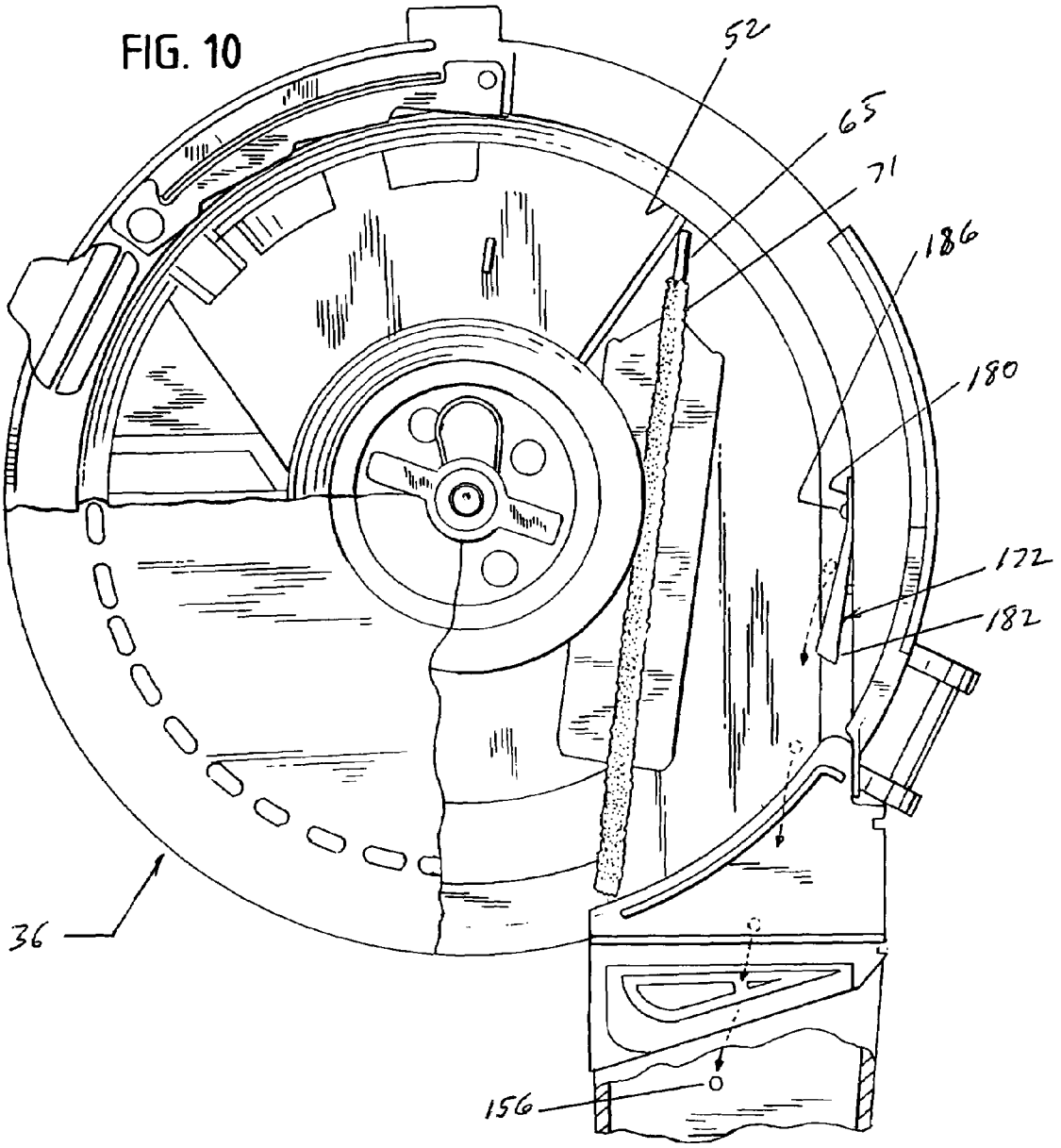

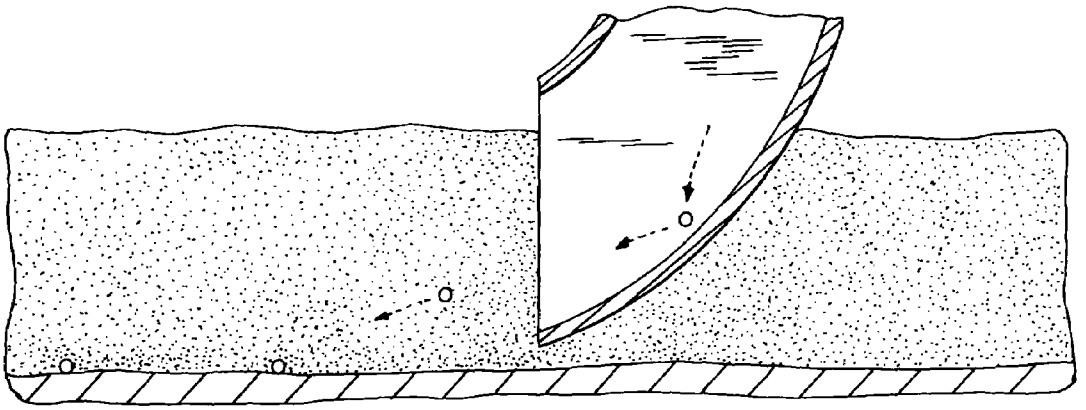

DEVICE FOR IMPROVING THE SPACING BETWEEN SEEDS PLANTED BY A JOHN DEERE VACUUM PLANTER

The present invention relates to seed planters of the type manufactured by John Deere which receive a rotatable seed disk and, in particular, to a method and apparatus for retaining equal spacing between seeds that are planted by such machines.

BACKGROUND OF THE INVENTION

John Deere manufactures a Max Emerge Drawn Conservation Flex-fold planter. The heart of the John Deere planter is a metering unit which retains a circular rotatable seed disk that separates the interior of the metering unit into two chambers, one on each side of the disk. The seed disks employed in the machine have a plurality of holes, with the centers thereof spaced to define a circle having a radius a little less than the radius of the disk. A vacuum is drawn in the chamber formed on one side of the disk and seeds are introduced into the chamber on the opposite side of the disk. The diameter of the holes in the seed disks are sized such that, when operating properly, the vacuum will draw one seed against the aperture of each hole in the disk and retain the seed as the disk rotates to a position above a seed tube, at which point the disk moves away from the vacuum chamber and the seed falls away from the disk and into the seed tube to be planted.

The planter is intended for use with many types of seed, including sunflower, cotton, soybean, sorghum, sugar beets, popcorn, sweet corn, and corn seed (feed corn seed). Each type of seed has a different size and configuration and the planter is, therefore, provided with a plurality of seed disks, which each of the seed disks having a different configuration of holes through which the vacuum is drawn to move seeds from the input to the seed tube.

The manual for the 7200 Max Emerge, 16 row, narrow flex-fold planter, for example, describes and depicts thirteen different seed disks. According to the manual, the seed size for certain grains, such as corn seed, vary widely. The manual recommends disk H136478 for the smallest sized corn seed, recommends disk A43215 for medium sized corn seed, and recommends disk A50617 for large sized corn seed.

The proper operation of the John Deere planter, therefore, requires the selection of the appropriate seed disk for use with the size and type of seed to be planted. To compensate for differences in weight, size, and shape of the various seeds, the proper operation of the planter also requires adjustments to the vacuum drawn to one side of the seed disk and depending on the size of seed being planted, the installation or removal of certain optional features. It is also recommended that the machine be monitored during its use and that the strength of the vacuum be adjusted if the machine is found to be under planting or over planting seed.

The machine scratches a trough in the ground and when the machine is operating properly it will deposit one seed every six inches along the trough or one hundred seeds along a six hundred inch length of ground. When the one hundred seeds are all equally spaced from one another, the stalks of corn, or other produce that grows from the seed, will not interfere with each other and the harvest from a tract of land will be maximized. When the machine drops two seeds at once through the seed tube the stalks that grow from the two seeds compete for the same nutrients from the ground and the same light from the sun resulting in both stalks being

stunted and a reduced harvest from the tract of land. Similarly, when the machine fails altogether to drop a seed at one of the planting locations, the harvest is also reduced. A machine is considered to be operating at one hundred percent efficiency if it will plant one hundred seeds in one hundred equally spaced planting locations along a length of ground. Where the machine plants ninety-eight seeds in one hundred locations, it is considered to be operating at ninety-eight percent efficiency and where it is planting one hundred and two seeds in every one hundred locations (a second seed into each of two locations), the machine is considered to be operating at one hundred and two percent efficiency. A farmer will consider a machine that is operating outside the range of ninety-five percent to one hundred and five percent to be unacceptably inefficient and in either case will be required to adjust the vacuum or replace the seed disks of the machine to improve its efficiency. The desired operating range for such machines is between ninety-nine percent and one hundred and one percent efficiency. The planters manufactured by John Deere are adapted to plant from four to thirty-one rows simultaneously with a metering unit including a hopper retaining seed and a seed disk for each row to be planted by the machine.

The difficulties of maintaining proper efficiency are accentuated in the case of corn seed, which is one of the major grains for which the John Deere planter is employed. Although it would be desirable for a farmer to obtain seed which is of all the same size, as a practical matter, he must deal with seeds of varying size. As previously stated, John Deere offers three different seed disks for use in planting corn seed, one disk for each of three ranges of seed size.

In my patent application filed Mar. 28, 2002, now U.S. Pat. No. 6,932,236 B2, I disclosed a kit that includes an improved seed disk for insertion into the metering unit of a John Deere planter to improve the efficiency with which seed, especially corn seed, is planted. Specifically, machines having metering units fitted with the parts described in my patent no. 6,932,236 B1 will reliably deposit between ninety-nine and one hundred and one corn seeds along a length of ground that should receive one hundred seeds.

Another factor that effects the harvest produced by a tract of land is the spacing between the seeds along a row. Even though a row of seeds may have the correct number of seeds spaced along its length, if the seeds are not equally spaced apart from each other, the seeds that are spaced too close together will experience the problems of crowding and seeds that are spaced too far apart will not flourish enough to compensate for the stalks that are crowded.

Farmers have long recognized that John Deere planters have difficulty maintaining the spacing between seeds needed to maximize the harvest for a tract of land. The recognized solution to improve spacing is to operate the planter at a slower rate of speed. Although John Deere recommends that its planter be pulled at five miles per hour, farmers who want to avoid having a harvest that is reduced by poor seed spacing will choose to pull their planters at four miles per hour. Reducing the speed at which the planter is pulled increases the time required for planting and farmers who plant large acreage often encounter weather conditions and the like that allow a short planning season. In such cases, the farmer may be forced to pull the planter at six miles per hour, causing the spacings of the seeds to be even more uneven than when pulled at five miles per hour.

Even planters having metering units fitted with parts in accordance with my U.S. Pat. No. 6,932,236 B1 experience uneven spacing between seeds. This problem has been partially dealt with in my co-pending application Ser. No.

10/803,265 filed Mar. 18, 2004, but that has not resulted in a total solution the problem. It would be desirable; therefore, to provide an improvement to a vacuum seed planter that would improve the spacings between seeds planted without requiring that the machine be pulled at a slower rate of speed.

SUMMARY OF THE INVENTION

Briefly, the present invention is embodied in a method and apparatus for improving the spacing of seeds planted by a seed planter of the type manufactured by John Deere, having a metering unit for retaining a circular rotatable seed disk wherein seed is introduced into a first cavity in the metering unit defined by a first surface of the seed disk and a vacuum in drawn in a second cavity defined by the second surface of the seed disk. The vacuum draws individual seeds against transverse holes in the seed disk and releases the seeds to drop through a seed chute in the bottom of the metering unit and into the upper end of a seed tube that directs the seed into the ground for planting.

The seed chute is a channel having a generally rectangular opening with two approximately four inch long sides that are generally parallel to the seed disk and shorter, two inch long leading and trailing ends perpendicular to the long sides. The seed tube is an elongate tubular member having a generally rectangular cross-section which flares outward at the upper end thereof. The upper end of the seed tube is rectangular in shape with long sides that are a little longer than the outer dimensions of the long sides of the seed chute and short sides that are a little longer than the short sides of the seed chute.

During operation, seeds are drawn by the vacuum against the holes at the outer circumference of the rotating seed disk where they are retained as the disk moves through an arc that carries the seeds to a position above the seed chute and the seed tube. As the seeds reach a position above the seed chute, the disk moves away from the vacuum and the seeds fall away from the disk and through the rectangular opening of the seed chute and into the upper end of the seed tube. I have observed that all of the seeds that fall away from a given seed disk follow the same arc or path as they drop away from the seed disk and fall through the opening of the seed chute and into the seed tube below. Since each seed disk is intended for a different size and type of seed, each seed disk has a different thickness and surface configuration and therefore the path of the seeds falling away from one seed disk may be greatly different from the path of seeds falling away from another seed disk, but seeds falling away from a single seed disk all follow substantially the same path. Where the vacuum holes of the seed disk are positioned around the perimeter of the seed disk, as are the vacuum holes for all seed disks intended for use with corn, including a disk in accordance with my U.S. Pat. No. 6,932,236 B2, the seeds will be released very near to the leading wall of the seed tube where the leading wall is the narrow wall that is in the direction of motion of the planter as it moves across the field.

Where the path of seeds falling away from the seed disk carries the seeds along one wall of the seed tube, the moving seeds encounter the surface of the seed tube and some of the seeds are deflected by the irregularities in the inner surface of the seed tube. As the seeds become deflected by contact with the surfaces of the seed tube, they begin to ricochet or bounce down the remaining portion of the seed tube until they reach the lower end thereof and fall into the trough in the ground cut by the planter after which they are covered up and allowed to grow. Although the seeds falling away from a seed disk follow the same path as they move through the air, each seed follows a different path once it makes contact with the surface of the seed tube. Whereas one seed may slide along the surface and move smoothly down the length of the tube until it is expelled, a second seed following the first seed may be deflected from one surface to another of the seed chute and ricochet down its length causing it to be emitted into the trough after a longer period of time than the first seed. If the third seed slides through the seed tube without being deflected as severely as the second seed, it will be expelled into the trough as rapidly as the first seed and follow shortly behind the second seed such that the second seed is planted near the third seed and spaced a longer distance away from the first seed resulting in the uneven spacing of the seeds. To minimize the deflection of the seeds within the seed tube, it is desirable that the seeds follow a path that carries them near a vertical centerline of the seed tube such that the free fall of the seeds is maximized. It is desirable that the falling seeds do not contact the leading end or either of the side walls of the seed tube until the seed has dropped as far as possible down the length of the seed tube. It should be noted that the seed tube, as manufactured by John Deere, is somewhat tapered at the upper end thereof such that the walls are angled rather than vertical and seeds that engage the angled walls of the upper portion of the seed tube will be more highly deflected than seeds that fall between the sloping walls of the upper portions of the seed tube and do not engage the walls of the seed tube until the midportion thereof is reached where the side walls are vertical.

To direct the path of seeds falling from the seed disk so as to carry them near the center line of the seed tube, a deflector in accordance with the present invention is positioned on the outer wall of the first cavity of the metering unit immediately following the position at which the seed disk moves away from the vacuum. The deflector is configured so as to urge the path of seeds falling away from the seed disk away from the leading wall of the seed tube, and toward a centerline between the side walls of the seed tube to thereby maximize the free fall of the seeds before engaging a surface of the seed tube.

BRIEF DESCRIPTION OF THE DRAWINGS

A better and more complete understanding of the invention will be had after a reading of the following detailed description taken in conjunction with the drawings wherein:

FIG. **1** is a an isometric view of a John Deere planter;

FIG. **2** is a side elevational view of a row unit of the planter shown in FIG. **1** with the metering unit therein shown in broken lines;

FIG. **3** is an enlarged fragmentary side elevational view of the row unit shown in FIG. **2** with the metering unit visible within, the metering unit being without a deflecting member in accordance with the invention;

FIG. **4** is a front elevational view of a seed disk for use in the metering unit shown in FIG. **2**;

FIG. **5** is a rear elevational view of the seed disk shown in FIG. **4**;

FIG. **6** is a cross-sectional view of a metering unit such as shown in FIG. **2** but fitted with a deflector in accordance with the present invention;

FIG. **7** is an isometric view of the metering unit shown in FIG. **6** with the metering unit open and the seed disk removed;

FIG. **8** is an isometric view of the metering unit in the open condition with the seed disk inserted;

FIG. **9** is an isometric view of the metering unit shown in FIG. **6** with the unit closed and a portion of the wall broken away so the deflector is visible; and

FIG. **10** is a front elevational view of one side of the metering unit shown in FIG. **6** with a portion of the seed disk broken away.

DETAILED DESCRIPTION OF A PREFERRED EMBODIMENT

Referring to FIG. **1**, a John Deere planter such as a 7200 Max Emerge Flex-fold planter **10** includes a pair of elongate tow bars **12**, **14** at the rearward end of which is a cross bar **16** having wheels, not shown, for transporting the planter **10** across the open highway. Extending along the length of the cross bar **14** are a plurality of row units **30-30**. John Deere manufactures planters **10** which vary in width from four to thirty one row units.

The model 7200 planter was first offered for sale in 1987 and since then John Deere has placed several other models on the market including models 1750, 1760, 1770, and 1780, each of which has corresponding parts and the performances of all of which are improved by the use of the present invention.

Referring to FIGS. **2** and **3**, each row unit **20** has a frame **24** supported by a pair of spaced apart wheels, one of which **26** is visible in FIG. **2**. Mounted above the frame **24** are a first hopper **32** for retaining seed and a second hopper **34** for retaining a dry herbicide. Below the seed hopper **32** is a metering unit **36** and a chute, not shown, directs seed from the hopper **32** to the metering unit **36**. Below the metering unit **36** are opener discs **40**. Rearward of the opener discs **40** are closing wheels **44**, the elevation of which is adjustable through a pivot **46** to thereby permit the opener discs **44** to create a trench of the depth desired for the seed being planted.

A seed tube **48** extends from the metering unit **36** to a position between the opener discs **40** for directing individual seeds singulated by the metering unit **36** into the furrow of ground formed by the opener discs **40**, thereby planting the seed. A gearing assembly, not shown, connected to the wheels **26** rotates a drive member, also not show, which rotates a shaft **42** that extends through the metering unit and drives the metering unit **36** such that the rate at which the metering unit discharges seed is coordinated to the ground speed of the planter **10**.

When the planer **10** operates properly, the planted seed will have a predetermined spacing, such as six inches, between adjacent seeds. If the spacing between adjacent seeds is too close, the plants that grow from the seed will interfere with each other and thereby reduce the yield of the field. If the spacing between seeds is too far apart, the yield from the field will also be reduced and therefore, yield is maximized when the seed is consistently planted with the desired spacing between seed.

Referring to FIGS. **6** through **10**, the metering unit **36** includes a first housing member **50**, having a generally cylindrical outer wall **52** and a planar rear wall **54** thereby forming a cavity. Extending from the rear wall **54**, axially with respect to the cylindrical outer wall **52**, is a tubular retaining hub **56** at the distal end of which is a handle **58** which is rotatable between a first position for receiving or removing a seed disk **60** and a second position for removably retaining a seed disk **60** on the hub **56**.

Referring to FIGS. **6**, **7**, and **8**, the retaining hub **56** is threaded on a cylindrical drive shaft **55** at the distal end of which are a pair of flanges **57** for drivingly engaging a drive member, not shown, which in turn is drivingly connected by the gearing, also not shown, to the wheels **26**. A removable spring locking pin, not shown, locks the tubular retaining hub **56** to the inner drive shaft **55**. By removing the spring locking pin, the retaining hub **56** can be rotated with respect to the inner shaft to thereby axially move the retaining hub **56** with respect to the rear wall **54** of the first housing member **50**. Rotating the retaining hub **56** clockwise with respect to the drive shaft moves a seed disk **60** retained thereon toward the rear wall **54** and rotating the retaining hub **56** counterclockwise moves a seed disk **60** thereon away from the rear wall **54** of the first housing member **50**. Adjusting the retaining hub **56** causes the axial adjustment of the seed disk **60**, after which the parts are locked into their desired orientation by locking pin **59**.

Referring briefly to FIGS. **4** and **5**, the seed disk **60** has a generally circular body with first and second planar surfaces **61**, **62**, and having a wing shaped central opening **53**. The opening **53** is shaped to receive the winged hub handle **58**, not shown, at the distal end of the retaining hub **56** of first housing member **50**. Surrounding the central opening **53** on the second side **62** are two arcuately shaped opposing ramped surfaces **63**, **64** and opposing locking notches **65**,**66** for locking the seed disk **60** to the hub **56**. Extending around a circle which is spaced a short distance within the outer circumference of the seed disk **60** are a plurality of spaced transverse holes **67-67**. The diameter of the cylindrical outer end of the seed disc **60** is a little less than the inner diameter of the tubular outer wall **52** of the first housing member **50** of the metering unit **36** (and of the cylindrical outer wall of the second housing member **90**, as is further described below).

Referring further to FIGS. **3** and **6**, the first housing **50** includes an upwardly opening access port **69** in the rear wall **52** into which the lower end of the chute from the hopper **32** extends, allowing seeds to enter the first housing member **50**. Approximately diametrically opposite the access port **69** is a seed chute **70** in the cylindrical wall **52** of the housing member **50** through which singulated seeds drop and fall into the seed tube **48** for planting. When assembled on a row unit **30**, the metering unit **36** is oriented with the axis of the hub **56** horizontal and the seed chute **70** extending downward as is shown in FIG. **3**.

Referring to FIGS. **11** and **12**, the seed chute **70** is a short, tubular member with a generally rectangular cross-section having parallel long sides **122**, **124** and parallel short sides **126**, **128**. The short sides **126**, **128** and long side **122** are formed as part of the casting for first housing member **50** and create a channel. Long side **124**, extends generally parallel to long side **122** and is formed by a plastic member **129** that extends across the ends of short sides **126**, **128** and is held in place by hooks **132**, **133** that are received in holes **134**, **135** in the ends of short side **128** and by a removable snap **136** that attaches to a catch **138** on the short side **126**.

Referring to FIGS. **3**, **11** and **12**, the seed tube **48** is an elongate, tapered, tubular member having a rectangular cross-section consisting of first and second opposing side walls **140**, **142** and generally perpendicular thereto, leading and trailing walls **144**, **146**. The seed tube **48** is molded of plastic and has formed into the body thereof and has a plurality of mounting points along the length thereof, now shown, except for hook **154** shown on FIG. **3**, for the attachment of the seed tube **48** to the row unit **30**.

Referring to FIG. **7**, extending across the rear surface of the first housing member **50** and adjacent the hub **56** is an elongate brush **71** having one end connected to the outer wall **52** and the second end spaced a short distance from the cylindrical outer wall **52** leaving a gap **65** between the distal end of the brush **71** and the inner surface of the cylindrical outer wall **52**. The brush **71** is positioned to separate seed entering the access port **69** from inadvertently reaching the seed chute **70**. The bristles of the brush **71** extend axially away from the rear wall **52** and brush against the first surface **61** of a seed disk **60** which has been retained thereto by the retaining hub **56** thereby creating a partial barrier between the outer wall **52** and the seed disk **60**. The brush **71** insures that seeds singulated by the seed disk **60** are removed therefrom as the disk passes over the seed chute **70** in the wall **52** and further separates the loose seeds entering through the port **69** from inadvertently entering the seed chute **70** and falling into the seed tube **48**.

Referring further to FIGS. **6**, **7**, and **8**, the metering unit **36** includes a second housing member **90** attached by a pivot pin **92** to the first housing member **50**. The second housing member **90** has a generally tubular outer wall **94** and a planar rear surface **96** such that it too has a cavity therein. The tubular outer wall **96** includes an intrusions portion **98** including a generally radial wall **103**, and around the inner edge of the outer wall **94** and the intrusion portion **98** is a rubberized sealing member **99** which seals against the second surface **62** of a seed disk **60** when the housing members **50**, **90** are assembled against each other as further described below.

The second housing member **90** further has an aperture **100** in the rear wall **96** and the outer surface of the second housing member has a tubular protrusion **101** the inner opening of which communicates with the aperture **100** and is adapted to receive a vacuum hose, not shown, leading from a vacuum pump. Most John Deere planters **10** have one or two vacuum pumps, not shown.

Within the intrusion portion **98** of the second housing member **90** is a third cavity defined by a portion of the cylindrical outer wall **94** and the wall of the intrusion portion **98**, and mounted thereon is a knockout assembly **120** of the type manufactured by John Deere.

Referring to FIGS. **7** and **8**, a latch assembly **158** on the first housing member **50** is adapted to engage a second latch member **159** on the second housing member **90** for retaining the two housing members **50**, **90** engaged with one another, to thereby form the assembled metering unit **36**.

As shown in FIGS. **3**, **5**, and **7**, when the two housing members **50**, **90** are latched in assembled relationship, with a seed disk **60** retained on the retaining hub **56** of the housing member **50**, the interior of the metering unit **36** will be divided into two chambers. The first chamber is defined by the cavity in the first housing member **50** and the first surface **61** of the seed disk **60**. The second chamber is defined by the cavity in the second housing member **90** and the second surface **62** of the seed disk **60**. It should be appreciated that the second chamber excludes the intrusion portion **98** of the second housing member **90**.

A vacuum is drawn by the vacuum pumps through lines connected to the second housing member **90** and through the aperture **100** creating a vacuum in the second chamber of the metering unit **36**. Meanwhile, seeds **156** from within the seed hopper **32** drops through the chute **38** and through the port **69** into the first chamber. When the metering unit **36** is operating properly, the vacuum in the second chamber is drawn through the plurality of holes **67-67** of the seed disk **60** except for those holes **67-67** positioned beyond the sealing member **99** (defined by the intrusion portion **98**). The intrusion portion **98** sections off from the cavity of the second housing member **90** the portion of the seed disk **60** for which a vacuum is not drawn through the vacuum holes **67-67**. As the disk **60** rotates through the mass of seeds **156** which accumulate near the port **69**, one seed is drawn by the vacuum against each of the transverse holes **67-67**. As the seed disk **60** continues to rotate within the metering unit **36**, the singulated seeds are moved through the gap **65** at the distal end of the brush **71** and over the seed chute **70** in the outer wall **52** of the second housing member **50**. As each of the singulated seeds is moved over the seed chute **70**, the aperture of the associated hole **67** on the second side **62** of the seed disk **60** crosses the vacuum barrier formed by the sealing member **99** across the radial wall **103** thereby releasing the seed from the first side **61**. The seeds then fall away from the seed disk **60** and fall in an arc or path through the seed chute **70** in the outer wall **52** of the first housing member **50** and through the seed tube **48** to be planted.

Each seed disk **60** has a different thickness and configuration and is intended for a different size and shape of seed **156**. As a result, the seeds **156** that fall away from a first seed disk **60** fall through a different path than those that fall away from a second seed disk **60** used for a different type or different size of seed. However, all the seeds **156** that fall off a given seed disk **60** follow substantially the same path as they fall away from the seed disk **60**.

For example, the seed disks sold by John Deere, not shown, for planting corn in the planer **10** have contoured pockets with raised outer boundaries that surround the openings for the vacuum holes on the first side thereof. The pockets and raised boundaries are intended to assist in singulating the seed and they also cause the seeds to fall nearly midway between the side walls **140**, **142**. On the other hand, the seed disk disclosed in my U.S. Pat. No. 6,932,236 B2 has a flat first surface against which the seeds are held as they are moved over the seed chute **70**. The absence of raised boundaries around the vacuum holes **67** causes the seed **156** dropped from the seed disk disclosed in my U.S. Pat. No. 6,932,236 B2 to drop through the seed chute **70** nearer to the second housing **90** and nearer to side wall **142** than do seeds dropped by the disks sold by John Deere for planting corn seed.

For example, the seed disks sold by John Deere, not shown, for planting corn in the planer **10** have contoured pockets with raised outer boundaries that surround the openings for the vacuum holes on the first side thereof. The pockets and raised boundaries are intended to assist in singulating the seed and they also cause the seeds to fall nearly midway between the seeds walls **140**, **142**. On the other hand, the seed disk disclosed in my U.S. Pat. No. 6,932,236 B2 has a flat first surface against which the seeds are held as they are moved over the seed chute **70**. The absence of raised boundaries around the vacuum holes **67** causes the seed **156** dropped from the seed disk disclosed in my U.S. Pat. No. 6,932,236 B2 to drop through the seed chute **70** nearer to the second housing **90** and nearer to side wall **142** than do seeds dropped by the disks sold by John Deere for planting corn seed.

Referring to FIG. **3**, the seed tube **48** is positioned with the leading wall **144** directly below the most forward position of the seed disk **60**. The manufacturers of the product intended that the seeds **156** released by the seed disk **60** would slide along the slightly curved leading wall **144** until they fall out of the distal end **162** thereof and into the trough **164** in the ground for planting. In reality, not all of the seeds **156** slide along the curved leading wall **144** as intended, but some are

deflected and follow irregular paths, such as path **166** and encounter several of the inner surfaces of the seed tube **48** as it they are ricocheted along the tube **48** before being expelled out the discharge opening **162** for planting. For all the seed disks manufactured by John Deere, the seeds are released near the outer wall **52** of the metering unit **36** and follow a path that takes them along the leading wall **144** from the point of entry into the seed tube **48** such that many are deflected as they move downward through the length of the seed tube **48**.

Furthermore, depending on the configuration and thickness of the seed disk **60** in the metering unit **36**, the seeds falling from the seed disk **60** may follow a downward path that does not take it midway between the side walls **140**, **142**, but rather in a path that is near side wall **142** such that the seeds **156** engage the side wall **142** where it is partially sloped causing some of the seeds to be deflected and thereafter ricochet down the remaining portions of the length of the seed tube **48**.

Referring to FIGS. **6**, **7**, **8**, **9**, and **10**, it is desirable to direct the path **168** of seeds **156** so that they fall as nearly as possible to a center line **170** of the seed tube **48** that is equally spaced between the side walls **140**, **142** of the seed tube **48** and spaced from the leading wall **144** so that the seeds **156** will drop as far as possible down the length of the seed tube **48** before encountering one of the side walls **140**, **142** or the lead wall **144**. To direct the path **168** of the seed **156** toward the center line **170**, a deflector **172** is mounted on the cylindrical inner wall **52** of the first housing member **50** at a position immediately opposite the radial wall **103** that defines the position at which seeds are released from the seed disk **60** and allowed to fall. The deflector **172** is preferably made of a stainless spring steel plate so as to not be subject to corrosion and so as to retain its shape while being subjected to pressure applied by the seeds as they move along its surface. Preferably, the deflector **172** is rectangular in shape with a width **174** of approximately three-quarters inch and a length **176** of between one and one-half and two inches. The deflector **172** preferably also has a first very gentle bend **178** separating a mounting section **180** from a deflection section **182** and a transverse hole, not visible, in the mounting section **180** such that a mounting screw **186** can be extended through the hole in the mounting portion and into a threaded hole, **187**, in the cylindrical inner wall **52** of the first housing **50** for retaining the deflector **172**. The deflector **172** has a second bend in the form of a clearly definable crease **188** that extends at an angle that more closely parallels the length **176** than the width **174** of the deflector **172**. The deflector **172** is attached to the inner wall **52** of the first housing **50** with the end of the crease **188** nearest the mounting section **180** positioned at the point where the seeds **156** are released from the seed disk **60**. Since the seeds **156** are released by the seed disk very near the outer wall **54**, soon after they are released, they will contact the surface of the deflector **182**. Once released from the seed disk **60**, the seeds **156** will be directed by the surfaces of the deflector along the crease **188** and the deflector **172** will cause the path **168** of the seeds to be directed towards a centerline **170** generally midway between the side walls **140**, **142** of the seed tube **48**.

Referring to FIG. **9**, a threaded adjustment screw **190** is threaded into a tapped hole in the cylindrical wall **52** of the first housing member **50** until the distal end of the screw **190** contacts the rear surface of the deflection section **182** of the deflector **172**. Further tightening of the screw **190** causes the distal end of the deflection section **182** to move further outward of the cylindrical wall **52** thereby deflecting the path **168** of the seeds **156** further from the leading wall **144** of the seed tube **48**. By adjusting the screw **190**, the path **168** of the falling seeds **156** can be set so they do not follow the curve of the leading wall **144** of the seed tube **48** but free fall through down half the length of the seed tube **48** or more before first contacting a portion of the leading wall **144**. Since the path **168** of falling seeds results in the seeds not encountering the walls of the seed tube **48** until the seeds have dropped approximately half the length of the seed tube **48**, the seeds that are planted are more nearly equally spaced apart as they are emitted through the aperture **162** at the lower end of the seed tube **48**. As a consequence of the seeds being equally spaced apart as they are emitted through the aperture **162**, the seeds planted by the planter **10** are very nearly equally spaced apart so as to minimize any reduction in harvest caused by the unequal spacing of seeds.

While the present invention has been described with respect to a single embodiment, it will be appreciated that many modifications and variations may be made without departing from the true spirit and scope of the invention. It is, therefore, the intent of the following claims to cover all such modifications and variations which fall within the true spirit and scope of the invention.

What is claimed:

1. In a seed planter having a metering unit having a housing retaining a circular rotatable seed disk, said seed disk having a center, a first surface, a second opposing surface, and a plurality of transverse spaced vacuum holes extending from said first surface to said second surface, wherein seeds are introduced into a first cavity in said housing defined by said first surface and a vacuum is drawn into a second cavity in said housing defined by an inner wall of said housing and by said second surface, such that seeds are retained against said vacuum holes until they are released from said vacuum and dropped through a seed chute and into a seed tube, said seeds follow a predetermined path as they fall away from said seed disk and into said seed tube, the improvement comprising

said seed tube having generally parallel side walls, a leading wall and a trailing wall,

said side walls spaced apart from each other by a distance significantly greater than a diameter of one of said seeds,

said leading wall and said trailing wall spaced from each other by a distance significantly greater than said diameter of one of said seeds,

a deflector on said inner wall, said deflector deflecting said path toward a vertical centerline between said leading and trailing walls wherein said seeds will free fall between said leading and trailing walls for a portion of a length of said seed tube.

2. The improvement of claim **1** and wherein said deflector further deflects said path toward a vertical centerline between said opposing side walls.

3. The improvement of claim **1** wherein said deflector comprises

a metal body,

said body having a mounting portion for attaching said body to said housing, and

a deflecting portion,

said deflecting portion has a surface angled with respect to a surface of said mounting portion wherein said deflecting portion deflects said predetermined path toward said centerline between said leading and trailing walls.

4. The improvement of claim **3** and further comprising a crease in said deflecting portion wherein said crease also

deflects said predetermined path toward a centerline between said opposing side walls.

5. The improvement of claim **3** wherein said deflector is made of stainless steel.

6. The improvement of claim **3** wherein said deflector is made of spring steel.

7. The improvement of claim **3** and further comprising an adjustment screw for changing an angle of said deflecting portion to thereby adjust said path towards said centerline.

8. In a seed planter having a metering unit having a housing retaining a circular rotatable seed disk, said seed disk having a center, a first surface, a second opposing surface, and a plurality of transverse spaced vacuum holes extending from said first surface to said second surface, wherein seeds are introduced into a first cavity in said housing defined by said first surface and a vacuum is drawn into a second cavity in said housing defined by an inner wall of said housing and by said second surface, such that seeds are retained against said vacuum holes until they are released from said vacuum and dropped through a seed chute and into a seed tube, said seeds follow a predetermined path as they fall away from said seed disk and into said seed tube, the improvement comprising

said seed tube having generally parallel side walls, a leading wall and a trailing wall,

said side walls spaced apart from each other by a distance significantly greater than a diameter of one of said seeds,

said leading wall and said trailing wall spaced from each other by a distance significantly greater than said diameter of one of said seeds,

a deflector on said inner wall, said deflector deflecting said path toward a vertical centerline between said opposing side walls wherein said seeds will free fall between said opposing side walls for a portion of a length of said seed tube.

9. The improvement of claim **8** wherein said deflector comprises a metal body,

said body having a mounting portion for attaching said deflector to said housing, and

a deflecting portion,

said deflecting portion having a surface angled with respect to a surface of said mounting portion wherein said deflecting portion deflects said predetermined path toward said centerline.

10. The improvement of claim **9** and further comprising an adjustment screw of changing an angle of said deflecting portion to thereby adjust said path toward said centerline.

11. A seed planter comprising

a metering unit having a housing,

a rotating seed disk in said housing,

said seed disk having a first surface, a second surface opposite said first surface, a plurality of vacuum holes extending from said first surface to said second surface,

said first surface defining a first cavity in said housing and said second surface defining a second cavity therein,

a vacuum drawn in said second cavity,

a seed chute extending downward from said first cavity wherein seeds released from said first side fall in a path through said seed chute,

a seed tube extending downward from said seed chute,

said seed tube having generally parallel side walls, a leading wall and a trailing wall,

said side walls spaced apart from each other by a distance significantly greater than a diameter of one of said seeds,

said side walls spaced apart from each other by a distance significantly greater than a diameter of one of said seeds,

said leading wall and said trailing wall spaced from each other by a distance significantly greater than said diameter of one of said seeds,

a deflector on an inner wall of said housing,

said deflector deflecting said path toward a centerline generally midway between said side walls and midway between said leading wall and said trailing wall wherein said seeds will free fall through a portion of a length of said seed tube.

12. The seed planter of claim **11** wherein said deflector comprises a metal body,

said body having a mounting portion for attaching said deflector to said housing, and

a deflecting portion,

said deflecting portion having a surface angled with respect to a surface of said mounting portion wherein said deflecting portion deflects said predetermined path toward said centerline.

13. The seed planter of claim **12** and further comprising an adjustment screw for changing an angle of said deflecting portion to thereby adjust said path toward said centerline.

* * * * *

UNITED STATES PATENT AND TRADEMARK OFFICE

CERTIFICATE OF CORRECTION

PATENT NO. : 7,228,807 B1
APPLICATION NO. : 11/392055
DATED : June 12, 2007
INVENTOR(S) : Dale VenHuizen

It is certified that error appears in the above-identified patent and that said Letters Patent is hereby corrected as shown below:

Column 6, Line 64 after "plastic end" delete "has formed into the body thereof and"

Column 6, Line 65 after "thereof" delete "now" and substitute --not--

Column 10, Line 5 after "through" delete "down"

Column 12, delete lines 21 to 23 both inclusive

Signed and Sealed this

Eighteenth Day of March, 2008

JON W. DUDAS
Director of the United States Patent and Trademark Office