Filed on behalf of:
Precision Planting, LLC

Filed: May 21, 2025

UNITED STATES PATENT AND TRADEMARK OFFICE

BEFORE THE PATENT TRIAL AND APPEAL BOARD

PRECISION PLANTING, LLC,
Petitioner,

v.

MASCHIO GASPARDO S.p.A.,
Patent Owner.

Case IPR2024-00008
U.S. Patent No. 8,770,121

Before BENJAMIN D. M. WOOD, RICHARD H. MARSCHALL, and, RYAN H. FLAX *Administrative Patent Judges*.

PETITIONER'S NOTICE OF APPEAL

Pursuant to 37 C.F.R § 90.2(a) and 35 U.S.C. § 142, Petitioner Precision Planting, LLC ("Precision" or "Petitioner") hereby gives notice that it appeals the Patent Trial and Appeal Board's ("Board's") Final Written Decision, entered on March 21, 2025 (Paper No. 39) in the above-captioned inter partes review of United States Patent No. 8,770,121 (the " '121 Patent") to the United States Court of Appeals for the Federal Circuit, including all underlying orders, decisions, rulings, and opinions that are adverse to Petitioner.

For the limited purpose of providing the Director with the information requested in 37 C.F.R § 90.2(a)(3)(ii), Petitioner's issues on appeal may include, but are not limited to: (1) the Board's determinations and applications of any stated, unstated, or implied constructions for the claim terms at issue to the prior art of record; (2) the Board's determination of patentability of the following claims of the '121 Patent under grounds 1-4:

(i) Claims 1-3, 7-12, and 16 as anticipated under 35 U.S.C. § 102(b) by U.S. Patent No. 7,228,807 to VenHuizen;

(ii) Claims 1-5, and 10-14 as anticipated under 35 U.S.C. § 102(b) by E.P. 0536543 to Fiorido;

(iii) Claims 1-5, 7-14, and 16 as obvious under 35 U.S.C. § 103(a) over the combination of Fiorido, VenHuizen, and Applicant Admitted Prior Art; and

(iv) Claims 1-3, 7-12, and 16 as obvious under 35 U.S.C. § 103(a) over the combination of Amazone, Fiorido, VenHuizen, and Applicant Admitted Prior Art.

(3) the Board's procedural rulings, including its rulings regarding the adequate and timely preservation of certain of the parties' arguments; (4) the adequacy of the Board's consideration of the expert testimony, prior art, and other evidence in the record; (5) the Board's findings that conflict with the evidence of record and are not supported by substantial evidence; (6) any findings or determinations supporting or related to the aforementioned issues as well as all other issues decided adversely to Precision in any orders, decisions, rulings, phone conference decisions, and/or opinions; (7) the Board's application of its policies and procedures; (8) the Board's compliance with the Administrative Procedure Act, including whether the Final Written Decision is arbitrary, capricious, an abuse of discretion, not in accordance with law, or in excess of the Board's jurisdiction; and (9) any procedural irregularities associated with the review proceeding.

Simultaneously with this filing with the Patent Trial and Appeal Board, Petitioner is emailing a true and correct copy of this Notice of Appeal to the Director of the United States Patent and Trademark Office, and filing a true and correct copy of the same, along with the required docketing fee, with the Clerk of the United States Court of Appeals for the Federal Circuit.

Respectfully submitted,

Dated: May 21, 2025

/s/ ***Scott R. Brown***

Scott R. Brown (Reg. No. 40,535)
sbrown@hoveywilliams.com
Matthew B. Walters (Reg. No. 65,343)
mwalters@hoveywilliams.com
HOVEY WILLIAMS LLP
10801 Mastin Blvd., Suite 1000
Overland Park, Kansas 66210
Telephone: 913.647.9050
Fax: 913.647.9057

Counsel for Petitioner
Precision Planting, LLC

Certificate of Service

In accordance with 37 CFR § 90.2(a)(1) and § 104.2, I hereby certify that on May 21, 2025, in addition to being filed electronically through the Board's PTACTS System, a true and correct copy of the foregoing Petitioner's Notice of Appeal was served by electronic mail to the following email address which is indicated on the USPTO's web page for the Office of the General Counsel:

efileSO@uspto.gov

/s/ ***Scott R. Brown***
Scott R. Brown (Reg. No. 40,535)
sbrown@hoveywilliams.com
Counsel for Petitioner

Certificate of Service

I hereby certify that on May 21, 2025, a true and correct copy of the foregoing Petitioner's Notice of Appeal, along with a copy of the Final Written Decision, was filed with the Clerk's Office of the United States Court of Appeals for the Federal Circuit, with a courtesy copied mailed to the following address:

United States Court of Appeals for the Federal Circuit
717 Madison Place, N.W., Suite 401
Washington, DC 20005

/s/ ***Scott R. Brown***
Scott R. Brown (Reg. No. 40,535)
sbrown@hoveywilliams.com
Counsel for Petitioner

Certificate of Service

Pursuant to 37 C.F.R. § 42.6(e), I certify that on May 21, 2025, a true and correct copy of **Petitioner's Notice of Appeal** was served by electronic mail on Maschio's lead and backup counsel at the following email addresses:

David P. Fitzgibbon dfitzgibbon@stradley.com
Stradley Ronon
Great Valley Corp. Center
30 Valley Stream Parkway
Malvern, PA 19355

Ashley E. Shapiro ashapiro@stradley.com
Stradley Ronon
2005 Market Street, Suite 2600
Philadelphia, PA 19103

/s/ ***Scott R. Brown***

Scott R. Brown (Reg. No. 40,535)
sbrown@hoveywilliams.com
Matthew B. Walters (Reg. No. 65,343)
mwalters@hoveywilliams.com
HOVEY WILLIAMS LLP
10801 Mastin Blvd., Suite 1000
Overland Park, Kansas 66210
Telephone: 913.647.9050
Fax: 913.647.9057

Counsel for Petitioner
Precision Planting, LLC

FINAL WRITTEN DECISION

Trials@uspto.gov
571-272-7822

Paper 39
Date: March 21, 2025

UNITED STATES PATENT AND TRADEMARK OFFICE

BEFORE THE PATENT TRIAL AND APPEAL BOARD

PRECISION PLANTING LLC,
Petitioner,

v.

MASCHIO GASPARDO S.p.A.,
Patent Owner.

IPR2024-00008
Patent 8,770,121 B2

Before BENJAMIN D. M. WOOD, RICHARD H. MARSCHALL, and RYAN H. FLAX, *Administrative Patent Judges*.

WOOD, *Administrative Patent Judge*.

JUDGMENT
Final Written Decision
Determining No Challenged Claims Unpatentable
Dismissing Petitioner's Motion to Exclude
Denying Petitioner's Motion to Strike
35 U.S.C. § 314

I. INTRODUCTION

A. Background and Summary

Precision Planting LLC ("Petitioner") filed a Petition (Paper 2, "Pet.") requesting *inter partes* review of claims 1–5, 7–14, and 16 of U.S. Patent No. 8,770,121 B2 (Ex. 1001, "the '121 patent"). Maschio Gaspardo S.p.A. ("Patent Owner") filed a Preliminary Response (Paper 7, "Prelim. Resp."). We instituted *inter partes* review of the challenged claims on March 26, 2024. Paper 12 ("Dec."). After institution, Patent Owner filed a Response to the Petition (Paper 17, "PO Resp."), Petitioner filed a Reply to Patent Owner's Response (Paper 20, "Pet. Reply"), and Patent Owner filed a Sur-reply to the Reply (Paper 24, "PO Sur-reply"). Petitioner subsequently moved to strike Patent Owner's Sur-reply (Paper 27, "Mot. to Strike,") and to exclude exhibits filed with the Sur-reply (Paper 26, "Motion to Exclude"). We held an oral hearing on December 12, 2024, a transcript of which is in the record. Paper 32 ("Tr.").

After the hearing, we requested additional claim-construction briefing from the parties. Ex. 3004. Petitioner filed a Response to our request (Paper 32, "Pet. Post-Hearing Resp."); Patent Owner filed a Response to Petitioner's Response (Paper 36, Patent Owner Post-Hearing Resp."); and Petitioner replied to Patent Owner's Response (Paper 37, "Pet. Post-Hearing Reply").

For the reasons set forth below, we determine that Petitioner has not shown by a preponderance of the evidence that any challenged claim is unpatentable. We also dismiss as moot Petitioner's motion to exclude and deny Petitioner's motion to strike.

B. Related Proceedings

The parties identify *Maschio Gaspardo S.p.A. v. Precision Planting LLC*, Civ. No. 1:22-cv-01394 (D. Del., filed Oct. 24, 2022) as a judicial matter that would affect, or be affected by, a decision in this proceeding. Pet. 90; Paper 11, 1.

C. The '121 Patent

The '121 patent is titled "Seed Distribution Element for Precision Seed Drills, Seed Drill Including Said Element." Ex. 1001, code (54). The '121 patent issued July 8, 2014, from a PCT application filed November 10, 2011, and asserts priority to an Italian patent application filed November 12, 2010. *Id.* at codes (45), (22), (30). Figures 1 and 2, reproduced below, depict the sole disclosed embodiment:

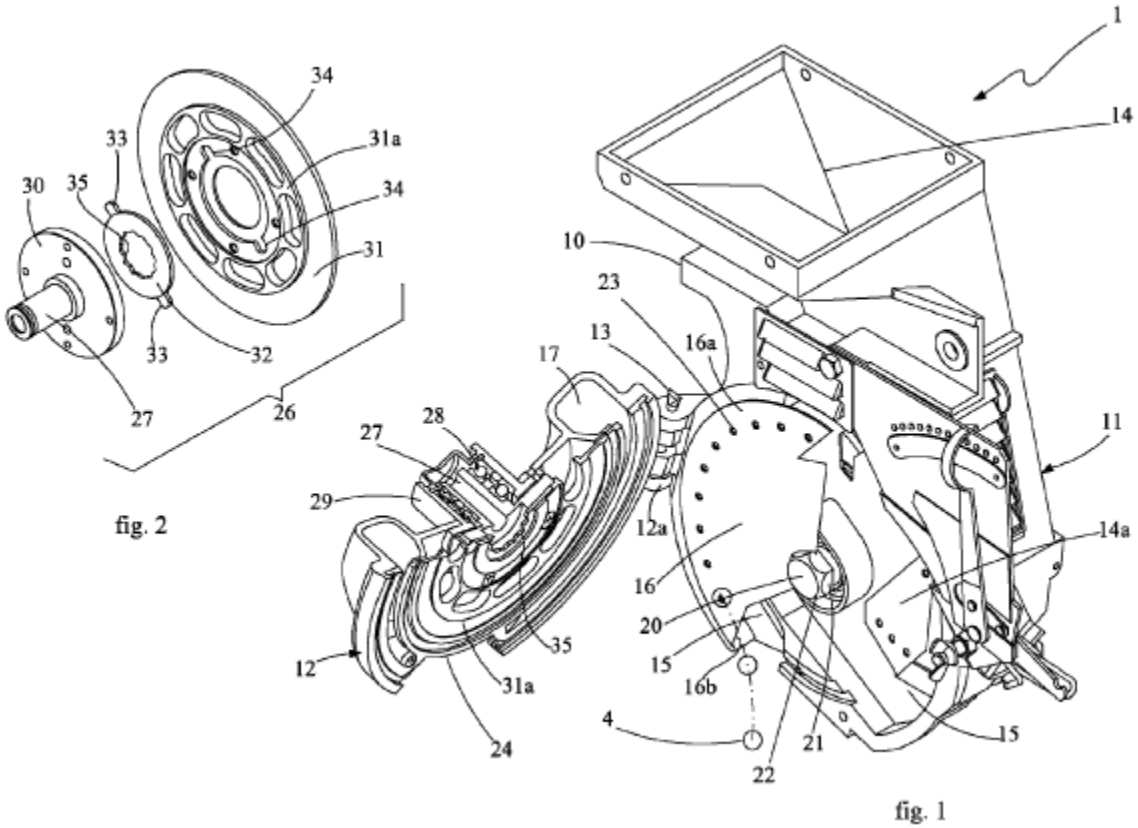

Figure 1 (above-right) depicts seed distribution element 1 and Figure 2 (above-left) depicts thrust-bearing element 26 of seed distribution element 1. *Id.* at 2:25–28, 3:21–24. Seed distribution element 1 comprises housing 10 with "fixed portion 11 fixed in a stable manner on frame 6" (shown in Figure 3) and "movable portion 12 hinged . . . on the fixed portion 11." Ex. 1001, 2:44–47. "[S]owing disc 16 is removably mounted on a motor-driven drive shaft 20, supported in the fixed portion 11 and driven in rotation at predetermined adjustable speeds by a transmission" (not shown). *Id.* at 2:60–63. Sowing disc 16 separates a "seed collection chamber 15 from a suction chamber 17." *Id.* at 2:54–56. The sowing disc 16 also contains one or more "ring(s) of holes 23." *Id.* at 3:3–5.

When fixed portion 11 is closed on movable portion 12, seal 24 "is placed in sliding contact with the facing surface of the disc 16." Ex. 1001, 3:6–8. This delimits "a circumferential segment in which the holes 23 are subjected" to a pressure differential. *Id.* at 3:6–10. "By reason of the pressure differential between the two opposed surfaces of the sowing disc, the seeds 4 are held, one to each hole 23 when the holes pass in the seed collection chamber 15, and are released in the region of the pipe 25 when the pneumatic effect of the pressure differential ceases." *Id.* at 3:15–19.

To limit the wear on seal 24 resulting from sliding against the surface of disc 16, "a thrust-bearing element indicated as a whole by 26 is mounted on the movable portion." Ex. 1001, 3:21–24, Fig. 2 (*see* above). Thrust-bearing element 26 comprises "shaft 27 rotatably mounted by means of bearings 28 in a seat 29 of the movable portion 12." *Id.* at 3:25–27. Shaft 27 has flanging 30 by means of which it is fixed to thrust-bearing plate 31, which "can bear on that surface of the disc which faces the seal 34 in a zone

radially inside the ring of holes 23 in order to withstand at least some of the axial load produced by the disc 16 on the seal 24." *Id.* at 3:27–32.

D. The Challenged Claims

Petitioner challenges claims 1–5, 7–14, and 16 of the '121 patent. Pet. 10. Claims 1 and 10 are the independent claims. Claim 1 is reproduced below:[1]

> 1. [i] A seed distribution element for precision pneumatic seed drills, comprising:
>
> [ii] a sowing disc which is rotated by a motor-driven transmission drive shaft at controlled speed,
>
> [iii] a housing with a fixed portion and a portion which is movable relative to the fixed portion and can be closed against the fixed portion,
>
> [iv] a seed collection chamber being defined in the fixed portion,
>
> [v] a pneumatic suction chamber being defined in the movable portion,
>
> [vi] the sowing disc being interposed between the fixed and movable portions and having opposed surfaces delimiting the chambers,
>
> [vii] the sowing disc having at least one ring of selector holes extending between the opposed surfaces, and
>
> [viii] a seal which is arranged on the movable portion and is capable of sliding contact with the facing surface of the disc when the fixed and movable portions are closed against one another,

[1] We add identifiers for each limitation corresponding to the subsection headings under which the limitation is discussed in the Petition. Pet. 36–46.

> [ix] wherein a pressure differential is provided between the opposed surfaces in the region of a circumferential segment of the ring of holes,
>
> [x] wherein the seed distribution element further comprises a thrust-bearing element of the sowing disc,
>
> [xi] which thrust-bearing element is supported rotatably in the movable portion in order to withstand at least some of the axial load produced by the disc on the seal.

Ex. 1001, 4:13–40 (Claim 1). Claim 10 is drawn to a kit for retrofitting seed distribution elements of the type according to claim 1, the kit additionally comprising:

> [T]he movable portion pre-assembled with: a thrust-bearing element of the sowing disc, which thrust-bearing element is supported rotatably in the movable portion in order to withstand at least some of the axial load produced by the disc on the seal.

Id. at 5:4–6:6. Claims 2–9 depend directly or indirectly from independent claim 1 and claims 11–16 depend from claim 10 (and refer to and incorporate the elements of other dependent claims). *Id.* at 4:41–5:3, 6:8–25.

E. Asserted Grounds of Unpatentability

Petitioner contends that the challenged claims are unpatentable based on the following specific grounds (Pet. 12):

No.	Claims Challenged	35 U.S.C. §	Reference(s)/Basis
1	1–3, 7–12, 16	§ 102(b)[2]	VenHuizen[3]
2	1–5, 10–14	§ 102(b)	Fiorido[4]
3	1–5, 7–14, 16	§ 103(a)	Fiorido, VenHuizen, Applicant Admitted Prior Art (AAPA)[5]
4	1–3, 7–12, 16	§ 103(a)	Amazone,[6] Fiorido, VenHuizen, AAPA

Petitioner also relies, *inter alia*, on the Declaration of Dr. Mark Fleming (Ex. 1003) to support its proposed grounds. Patent Owner submits, *inter alia*, the Declaration of Dr. Harry Dankowicz (Ex. 2012) to support its Response. Petitioner responds with a Rebuttal Declaration from Dr. Fleming (Ex. 1021), to which Patent Owner responds with a Sur-reply Declaration from Dr. Dankowicz (Ex. 2021).

[2] Because the '121 patent claims priority to an application filed before the effective date of the amendments to 35 U.S.C. § 102 and § 103 enacted by the Leahy-Smith America Invents Act (AIA), we apply the pre-AIA version of these statutes. *See* AIA, Pub. L. No. 112–29, § 3(n)(1), 125 Stat. 284, 293(2011). The outcome of this case would be the same under the AIA versions of these statutes, however.

[3] U.S. 7,228,807 (June 12, 2007) (Ex. 1006).

[4] E.P. 0536543 (Apr. 14, 1993) (Ex. 1007).

[5] Ex. 1001, 1:19–35, 38–41, 53–58, 63–65, 2:37–41.

[6] Amazone, Operator's Manual (Oct. 2005) (Ex. 1011).

II. ANALYSIS

A. Legal Standards Used in the Merits Analysis

"In an IPR, the petitioner has the burden from the onset to show with particularity why the patent it challenges is unpatentable." *Harmonic Inc. v. Avid Tech., Inc.*, 815 F.3d 1356, 1363 (Fed. Cir. 2016) (citing 35 U.S.C. § 312(a)(3) (requiring *inter partes* review petitions to identify "with particularity . . . the evidence that supports the grounds for the challenge to each claim")); *Dynamic Drinkware, LLC v. Nat'l Graphics, Inc.*, 800 F.3d 1375, 1378 (Fed. Cir. 2015) (discussing the burden of proof in *inter partes* review).

"Anticipation requires the presence in a single prior art reference disclosure of each and every element of the claimed invention, arranged as in the claim." *Lindemann Maschinenfabrik GMBH v. American Hoist & Derrick Co.*, 730 F.2d 1452, 1458 (Fed. Cir. 1984).

A claim is unpatentable under 35 U.S.C. § 103 if "the differences between the subject matter sought to be patented and the prior art are such that the subject matter as a whole would have been obvious . . . to a person having ordinary skill in the art to which said subject matter pertains." *KSR Int'l Co. v. Teleflex Inc.*, 550 U.S. 398, 406 (2007). The question of obviousness is resolved on the basis of underlying factual determinations, including: (1) the scope and content of the prior art; (2) any differences between the claimed subject matter and the prior art; (3) the level of skill in the art; and (4) when in evidence, objective evidence of nonobviousness, i.e., secondary considerations. *Graham v. John Deere Co. of Kansas City*, 383 U.S. 1, 17–18 (1966).

B. Level of Ordinary Skill in the Art

Petitioner contends that, for the '121 patent:

> [A] POSA as of November 12, 2010, would have had at least a bachelor's degree in mechanical or agricultural engineering and 2–4 years experience in the design or manufacture of agriculture equipment. A POSA would have been familiar with the design and operation of known seed distribution meters and with the use of bearings and other plate-like technologies to receive and distribute axial loads by providing bearing surfaces for the transfer of forces.

Pet. 21 (citations omitted). Petitioner's description of the level of ordinary skill in the art is supported by the testimony of Dr. Fleming. Ex. 1003 ¶¶ 32–33. Patent Owner "has no objection to [this] definition." PO Resp. 3.

As has Patent Owner, we adopt Petitioner's definition of the level of ordinary skill in the art for purposes of this Decision. We also presume that the cited prior art references reflect the level of ordinary skill at the time of the invention. *See Okajima v. Bourdeau*, 261 F.3d 1350, 1355 (Fed. Cir. 2001) (explaining the level of ordinary skill in the art may be evidenced by the cited references themselves).

C. Claim Construction

We construe claim terms "using the same claim construction standard that would be used to construe the claim in a civil action under 35 U.S.C. [§] 282(b)." 37 C.F.R. § 42.100(b). Under this standard, claim terms are generally given their plain and ordinary meaning as would have been understood by a person of ordinary skill in the art at the time of the invention and in the context of the entire patent disclosure. *Phillips v. AWH Corp.*, 415 F.3d 1303, 1312–13 (Fed. Cir. 2005) (en banc). Any special definitions for claim terms must be set forth in the Specification with reasonable clarity,

deliberateness, and precision. *See In re Paulsen*, 30 F.3d 1475, 1480 (Fed. Cir. 1994).

Petitioner proposes constructions for the terms (i) "thrust bearing element," (ii) "supported rotatably in the movable portion," and (iii) "transmission drive shaft." Pet. 22. Patent Owner offers an alternative construction for "thrust-bearing element." PO Resp. 50–62.

1. "thrust-bearing element" (claims 1–4, 10–14, 16)

Petitioner contends that "thrust-bearing element" as used in the '121 patent means "an element that provides support against an axial force." Pet. 22–25. Petitioner contends that, although a "thrust bearing" is "well-known in the art as a 'bearing which sustains axial loads and prevents axial movement of a loaded shaft,'" the patentee did not intend "thrust-bearing element" to refer to this structure because "thrust-bearing" is hyphenated. *Id.* at 22 (citing Ex. 1017, 3). According to Petitioner, "[b]y using a hyphen to connect the words 'thrust' and 'bearing,' the patentee uses them adjectivally to describe the generic word 'element' in the combined limitation." *Id.* Petitioner further contends that the Specification supports this interpretation because it describes an embodiment that does not resemble a traditional thrust bearing, but "more generally refers to an element that provides support against an axial force." *Id.* at 23–24.

Before institution, Patent Owner suggested that we "should decline to adopt Petitioner's proposed claim construction[]," but otherwise "defer[red] its own position on claim construction until such time as the Board decides to institute a trial." PO Resp. 28.

For purposes of the Institution Decision, we largely adopted Petitioner's proposed and unopposed construction. Dec. 9–10. We agreed

with Petitioner that "the hyphenated 'thrust-bearing' is a phrasal adjective that modifies the term 'element,'" and, as a result, we determined that "literally, a 'thrust-bearing element' is an 'element' that bears thrust," the thrust being "at least some of the axial load produced by the disc on the seal." *Id.*

In its Response to the Petition, however, Patent Owner asserts that "thrust-bearing element" should be construed as a means-plus-function claim limitation under 35 U.S.C. § 112 para. 6.[7] PO Resp. 5–17. This section provides:

> An element in a claim for a combination may be expressed as a means or step for performing a specified function without the recital of structure, material, or acts in support thereof, and such claim shall be construed to cover the corresponding structure, material, or acts described in the specification and equivalents thereof.

35 U.S.C. § 112 para. 6. Patent Owner contends that although the term does not use the word "means," the word "element" is a "nonce" word or "generic placeholder" that "do[es] not connote sufficiently definite structure." PO Resp. 7–8. Patent Owner further contends that the recited function is "to 'bear thrust' or to 'withstand at least some of the axial load produced by the disc on the seal,'" and the claim does not recite sufficiently definite structure for performing this function. *Id.* at 8. Patent Owner asserts that the Specification identifies the corresponding structure to be shaft 27 that is . . .

---

[7] Because the '121 patent claims priority to an application filed before the effective date of the amendment to 35 U.S.C. § 112 enacted by the AIA, we cite to the pre-AIA version of this statute. *See* AIA, Pub. L. No. 112–29, § 4(e), 125 Stat. 284, 297 (2011). Pre-AIA 35 U.S.C. § 112 para. 6 is not substantively different than AIA 35 U.S.C. § 112(f).

rotatably mounted by means of bearing 28 . . . in a seat 29 of the movable portion 12," all of which are "connected to the movable portion 12 of the housing." *Id.* at 9–10, 12. *Id.* Patent Owner identifies what it contends to be the corresponding structure in an annotated version of Figure 1 of the '121 patent, reproduced below:

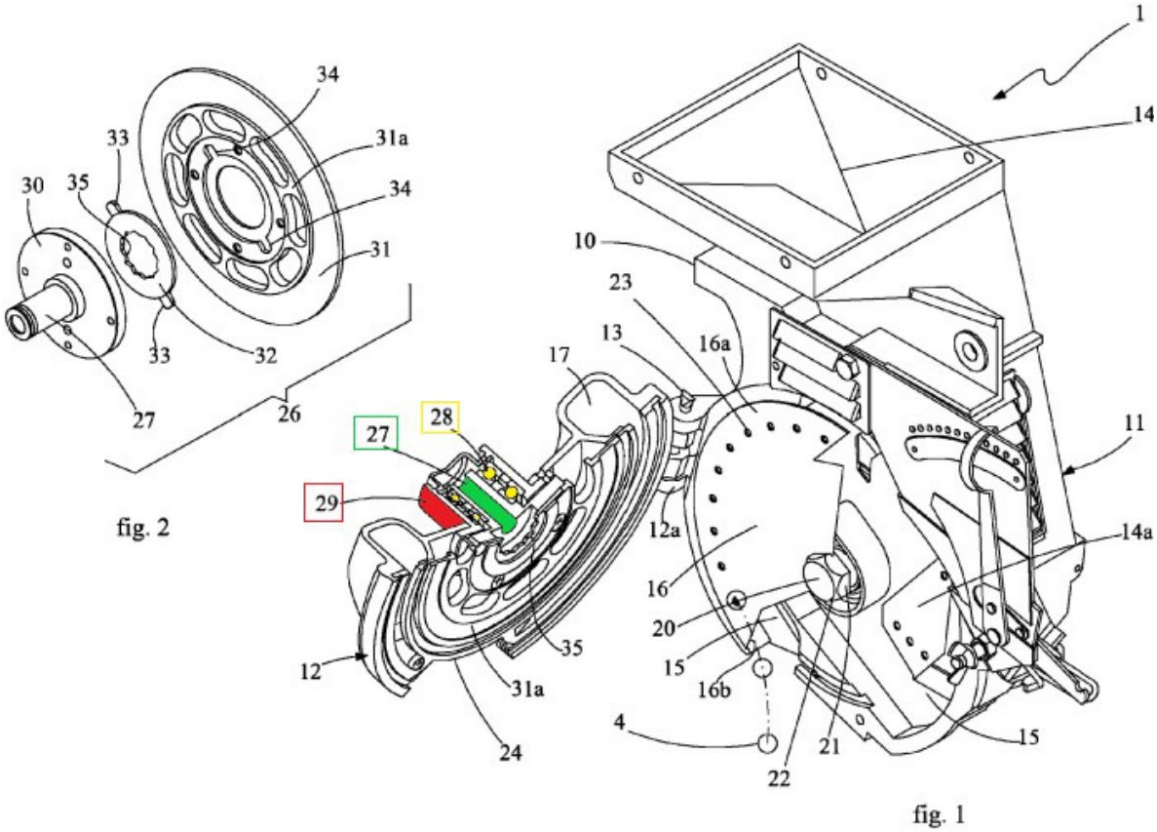

In its annotated version of Figure 1 of the '121 patent, Patent Owner identifies shaft 27 in green, bearings 28 in yellow, and seat 29 in red. PO Resp. 10.

Petitioner disagrees that "thrust-bearing element" should be construed as a means-plus-function claim limitation. Pet. Reply 1–16. First, Petitioner asserts that the term is presumed not to be a means-plus-function limitation because it does not contain the words "means." *Id.* at 1. Second, Petitioner contends that the claim language conveys sufficient structure to avoid

application of § 112 para. 6. *Id.* at 3–7. Petitioner points to language in independent claims 1 and 10 reciting that the thrust-bearing element is "an element 'of the sowing disc,'" and then refers us to claim language reciting structural features of the sowing disc. *Id.* at 4. Petitioner further submits that "thrust-bearing element" is "in fact a name for a structure," and, even if it were not, "the remaining claim language in combination identifies that the thrust-bearing element is located in the movable portion, is supported rotatably, and withstands at least some of the axial load produced by the disc on the seal." *Id.* at 5–6 (citing Ex. 1001, 4:38–40, 6:4–6; Ex. 1021 ¶¶ 14, 16; Ex. 2012 ¶ 55). According to Petitioner:

> [A] POSA would understand that this language connotes structure because a load must be absorbed in the movable portion of the housing, and the load will be absorbed by a rotatable structure that must transfer the load to a fixture to perform the required function. (Ex. 1021 ¶16.) This clearly implies a spinning rigid structure that contacts the sowing disc but nevertheless transfers the load to the housing. (*Id.*) A finite number of structures is possible to accomplish this, and they will include a shaft connected to a rigid structure in contact with the sowing disc. (*Id.*) The shaft of the thrust-bearing element will rotate about its axis but must not translate. (*Id.*) This rotation without translation requires a seat to support the shaft in a specific fashion. (*Id.*) The shaft by itself will not receive the thrust-load from the sowing disc unless there is a thrust-bearing plate coupled to the shaft that will interface with the sowing disc. (*Id.*) This connotes additional structure for receiving the thrust load from the sowing disc and resisting the load with the seat. (*Id.*)

Id. at 6 (citing Ex. 1021 ¶ 16).

Finally, Petitioner asserts that the term "thrust-bearing element" connotes structure because they are "described in the prior art." Pet. Reply 6. Petitioner contends that "[t]he AAPA discloses a [thrust-bearing

element] that relieves the heavy load on the seal and is described as being located in the fixed portion of the housing" and "rotatable with the sowing disc." *Id.* at 6–7 (citing Ex. 1021 ¶ 18).

Patent Owner responds in its Sur-reply that § 112(f) "does not 'permit incorporation of structure from the written description beyond that necessary to perform the claimed function.'" PO Sur-reply 5–6 (quoting *Micro Chem, Inc. v. Great Plains Chem. Co.*, 194 F.3d 1250, 1258 (Fed. Cir. 1999)). Patent Owner asserts that "only the shaft 27, bearings 28, and seat 29 are necessary for the 'TBE' [thrust-bearing element] to perform the claimed function while being supported rotatably in the movable housing portion." *Id.* at 7.

a. "thrust-bearing element" is a Means-Plus-Function Claim Limitation under 35 U.S.C. § 112, para. 6

To determine whether § 112, para. 6 applies to a claim term, we first look to whether the term uses the word "means." *Williamson v. Citrix Online, LLC*, 792 F.3d 1339, 1348 (Fed. Cir. 2015) (en banc). Use of the word "means" in the term creates a rebuttable presumption that § 112, para. 6 applies; conversely, the absence of "means" creates a rebuttable presumption that this section does not apply. *Id.* Here, of course, "thrust-bearing element" does not include "means," so we presume that § 112, para. 6 does not apply.

This presumption may be overcome, however, "if the challenger demonstrates that the claim term fails to 'recite[] sufficiently definite structure' or else recites 'function without reciting sufficient structure for performing that function.'" *Id.* (quoting *Watts v. XL Sys., Inc.*, 232 F.3d 877, 880 (Fed. Cir. 2000). That is, we determine whether or not "the words

of the claims are understood by persons of ordinary skill in the art to have a sufficiently definite meaning as the name for structure." *Id.* at 1349.

We determine that the evidence of record overcomes the presumption that § 112, para. 6 does not apply because "thrust-bearing element" does not recite sufficiently definite structure in this case. *See, e.g.*, Pet. 22 (the term is not used here according to its common meaning).

First, the word "element" is a "[g]eneric term[]" or "verbal construct[]" often "used in a claim in a manner that is tantamount to using the word 'means'" because it does not "connote sufficiently definite structure." *Williamson*, 792 F.3d at 1350. We find nothing in the '121 patent or elsewhere in the record suggesting that "element" in the term "thrust-bearing element" should be considered other than a generic placeholder term.

Second, although the term "thrust bearing" may connote certain structure, "thrust-bearing element" does not. A "thrust bearing" is "a well-known term of art in engineering and is 'a bearing which sustains axial loads and prevents axial movement of a loaded shaft.'" Ex. 1003 ¶ 46 (citing Ex. 1017, 2147). "The balls of traditional thrust bearings are positioned in-line with the axial force, as thrust bearings are designed specifically to transmit axial load." *Id.* Here, however, "thrust-bearing" is hyphenated, and is therefore a phrasal adjective modifying "element" rather than the noun phrase "thrust bearing."[8] Further, there are "substantial differences"

---

[8] As was stated in the parallel district-court proceeding:

> The noun phrase "thrust bearing" and the adjective "thrust-bearing" are not interchangeable. The adjective "thrust-bearing" modifies the nouns "element" and "plate" in the '121 patent's claims. *See* The Chicago Manual of Style ¶ 5.92 (17th

between the structure of a traditional thrust bearing and the thrust-bearing element depicted in Figures 1 and 2 of the '121 patent, as illustrated by a visual comparison of the two structures provided in Dr. Fleming's Expert Declaration, reproduced below:

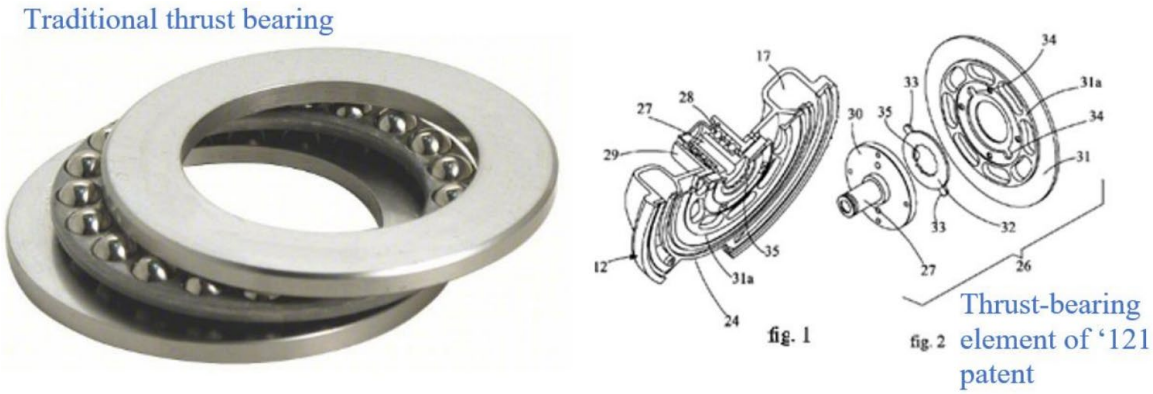

Dr. Fleming's Figure compares a "[t]raditional thrust bearing" (left) and the "[t]hrust-bearing element of [the] '121 patent" (right). Ex. 1003 ¶ 46. Dr. Fleming notes that the '121 patent teaches that the thrust-bearing element comprises shaft 27 with flanging 30 "by means of which it is fixed to a thrust-bearing plate 31." *Id.* ¶ 47 (quoting Ex. 1001, 3:25–32). Dr. Fleming observes that thrust-bearing plate 31 "does not ride on bearings but rather is connected to the shaft," and the shaft "is supported by roller bearings that are not in-line with the axial force." *Id.* Dr. Fleming concludes that "the specification indicates that the term 'thrust-bearing

---

> ed. 2017) ("A phrasal adjective (also called a *compound modifier*) is a phrase that functions as a unit to modify a noun. A phrasal adjective follows these basic rules: (1) Generally, if placed before a noun, the phrase should be hyphenated to avoid misdirecting the reader . . . . There may be a considerable difference between the hyphenated and the unhyphenated forms . . . .").

Ex. 2003, 12 n.6.

element' does not refer to a traditional 'thrust bearing' but more generally refers to an element that provides support against an axial force." *Id.* Based on Dr. Fleming's analysis of the teachings of the '121 patent, we determine that "thrust-bearing" is not intended to connote the structure of a traditional thrust bearing.

We are not persuaded by Petitioner's Reply-Brief argument that "thrust-bearing element" would have been understood to connote structure to one of ordinary skill in the art. Pet. Reply 3–7. First, this position is diametrically opposed to Petitioner's original position in the Petition that the phrase "thrust-bearing" was an adjective modifying "element," rather than a noun identifying a well-known structure. Pet. 22–24. Petitioner now relies on other claim language indicating that the thrust-bearing element is "of" the sowing disc, and suggests that because the term "sowing disc" conveys structure, "thrust-bearing element" does as well. *Id.* at 4–5. But, as also admitted by Petitioner, the claimed thrust-bearing element is *not* a part of the sowing disc. Tr. 9:2–15. Therefore, it is not entirely clear why the term "sowing disc" conveying structure is relevant to whether "thrust-bearing element" conveys sufficiently definite structure.

Petitioner additionally contends that "TBE is in fact a name for a structure." Pet. Reply 5 (citing Ex. 1003 ¶ 14). Petitioner is not referring to the structure of a known thrust bearing, however. Instead, Petitioner contends that "a POSA would understand that to be a thrust bearing for a spinning disc that is exerting thrust in a known direction, a structure having a conforming surface area contacting the disc, and additional structure for transferring thrust to a fixture (i.e., the housing) where it will ultimately be absorbed, would be required." *Id.* (citing Ex. 1021 ¶ 14). Petitioner also

submits that "the word 'bearing' itself connotes structure that resists a force." *Id.* (citing Ex. 1021 ¶ 14).

But Petitioner does not clearly identify any specific structure to which one of ordinary skill in the art would have understood the term "thrust-bearing element" to refer. "[C]onforming surface area contacting the disc" is so vague it could refer to essentially anything capable of physically contacting the sowing disc. "[S]tructure for transferring thrust to a fixture" simply uses the generic term "structure" followed by a function: "transferring thrust to a fixture." The same can be said for describing "bearing" as "structure that resists a force": The word "structure" followed by the function of resisting a force. Thus, any structure that "thrust-bearing element" might connote to one of ordinary skill in the art would not be sufficiently definite to avoid the application of § 112, para. 6.

Petitioner also argues that "[e]ven if the TBE were not a name for structure by itself, the remaining language in combination identifies that the thrust-bearing element is located in the movable portion, is supported rotatably, and withstands at least some of the axial load produced by the disc on the seal." Pet. Reply 6. We are not aware of any support for the proposition that identifying the location of the thrust-bearing element, specifying how it is supported, and repeating its function constitutes identification of the thrust-bearing element's structure per se.

Finally, Petitioner argues that thrust-bearing elements "are described in the prior art, which further supports that the term connotes structure." Pet. Reply 6. Petitioner asserts that "[t]he AAPA discloses a TBE that relieves the heavy load on the seal and is described as being located in the fixed portion of the housing," and "rotatable with the sowing disc." *Id.* at

6–7 (citing Ex. 1021 ¶ 18). But the '121 patent does not describe the structural characteristics of the prior art thrust-bearing element mentioned of in the AAPA. Petitioner does not explain what structural features would have been suggested to one of ordinary skill in the art by AAPA's teaching that the thrust-bearing element "rotate[s] with the disc" and be "mounted on the fixed portion of the housing."[9] Nor has Petitioner provided any reason to expect that an ordinarily skilled artisan would have understood "thrust-bearing element" to resemble the thrust-bearing element depicted in Figure 2 of the '121 patent. As Dr. Fleming testifies, other structures, such as washers, have been known to distribute axial loads. Ex. 1003 ¶ 33.b.

For the above reasons, we determine that the "thrust-bearing element" limitation fails to recite sufficiently definite structure and therefore the presumption against the application of § 112, para. 6 is rebutted.

b. Construing the Thrust-Bearing-Element Limitation as a Means-Plus-Function Claim Term

Construing a means-plus-function claim term is a two-step process: we first identify the claimed function, and then "determine what structure, if any, disclosed in the specification corresponds to the claimed function." *Williamson*, 792 F.3d at 1351.

For the first step, we determine that the claimed function of the thrust-bearing element limitation is to "bear thrust," or, more specifically, "to withstand at least some of the axial load produced by the disc on the seal." Ex. 1001, 4:37–40. This is not disputed. *See* PO Resp. 8 (asserting the "the general placeholder 'element' is modified by functional language (the

[9] The record lacks any evidence that the term "thrust-bearing element" was used in the art prior to the '121 patent. Tr. 13:11–25.

element functions to "bear thrust" or to "withstand at least some of the axial load produced by the disc on the seal")); Pet. Reply 10–11 (identifying structure disclosed in the '121 patent that performs "the thrust-bearing function").

For the second step, Petitioner contends that if "thrust-bearing element" is construed as a means-plus-function claim term, the Specification of the '121 patent identifies the following structure as associated with the claimed function of withstanding at least some of the axial load produced by the disc on the seal: shaft 27 with flanging 30; thrust-bearing plate 31 with ring 31a, and drive element 32. Pet. Reply 10–11. Petitioner provides annotated versions of Figures 1 and 2 of the '121 patent, reproduced below, in which Petitioner highlights the reference numbers associated with the thrust-bearing element structure in green squares:

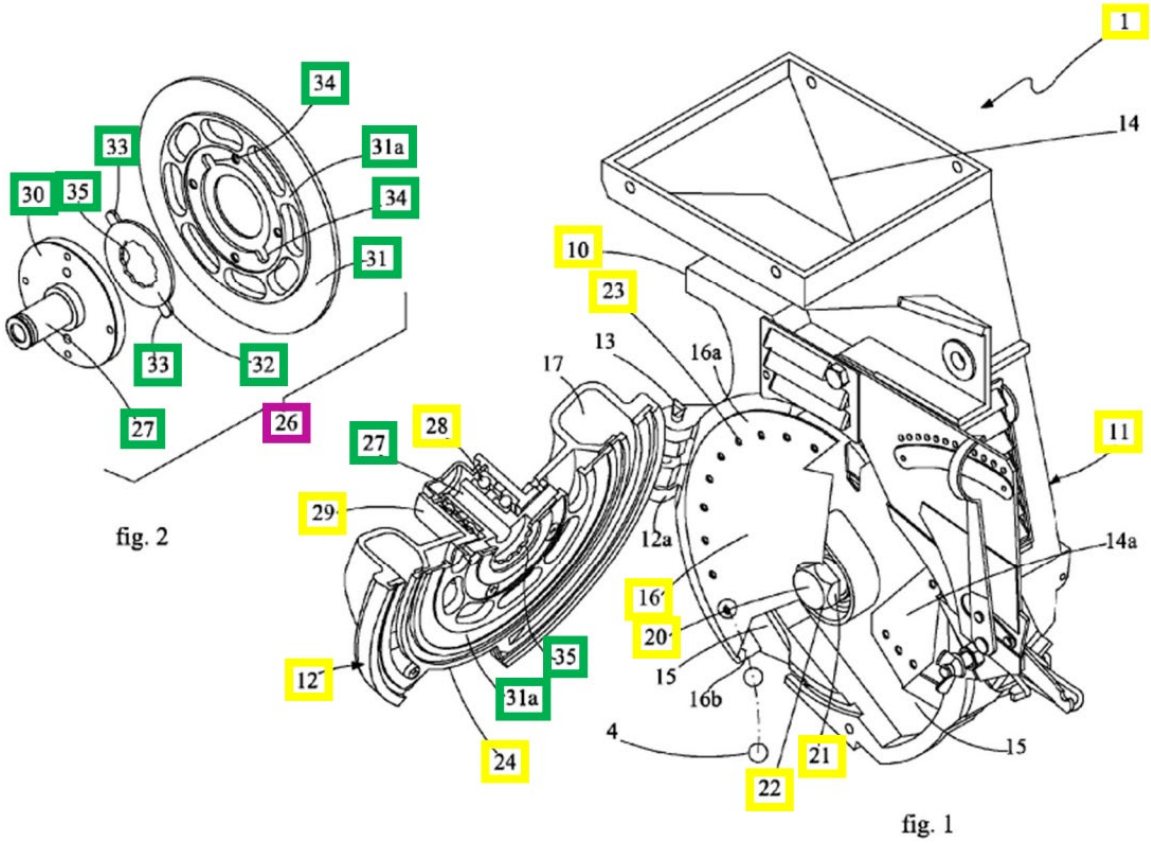

Petitioner's annotated versions of Figures 1 (above-right) and 2 (above-left) of the '121 patent identify as corresponding structure shaft 27 with flange 30, thrust-bearing plate 31 with central ring area 31a and seats 34, and drive element 32 with appendages 33 and internal polygonal profile 35. *Id.* at 9–10.

We largely agree with Petitioner. "[S]tructure disclosed in the specification is 'corresponding' structure only if the specification or prosecution history clearly links or associates that structure to the function recited in the claim." *B. Braun Med. Inc. v. Abbott Labs.,* 124 F.3d 1419, 1424 (Fed.Cir.1997). The Specification of the '121 patent "clearly links or associates" two components with the function of bearing axial thrust from the sowing disc: shaft 27 with flanging 30, and thrust-bearing plate 31. Ex. 1001, 3:25–35. Thrust-bearing plate 31 is expressly described as "bear[ing] on that surface of the disc which faces seal 24 . . . in order to withstand at least some of the axial load produced by the disc 16 on the seal 24. Ex. 1001, 3:28–31. Rotatably-mounted shaft 27 with flanging 30 is "fixed" to thrust-bearing plate 31 and therefore bears the axial load from the disc via the thrust-bearing plate. *Id.* at 3:25–28.[10]

---

[10] Drive element 32 is described as part of thrust-bearing element 26 and permits thrust-bearing element 26 to be driven in rotation with sowing disc 16. Ex. 1001, 3:36–40. It is not described as bearing any axial load, however. Further, it is not necessary for the thrust-bearing element to rotate with the sowing disc for that element to bear axial load from the sowing disc. *See id.* at 3:58–59 ("Provision is also made for the thrust-bearing element 26 to be made idle and not driven in rotation by the [drive] shaft 20."). Ultimately, however, whether drive element 32 is properly considered as part of the corresponding structure is not relevant to the outcome of this case.

We disagree with Patent Owner that bearings 28 and seat 29 should be considered corresponding structure. The Specification does not associate these structures with any axial load-bearing function. Instead, bearings 28 and seat 29 are described as the means by which, and the location in which, shaft 27 is rotatably mounted. Ex. 1001, 3:25–27. Regardless, whether or not bearings 28 and seat 29 are considered corresponding structure does not affect the outcome of this case.

In summary, we construe "thrust-bearing element" as a means-plus-function claim term under 35 U.S.C. § 112, para. 6. Its recited function is to bear thrust, or more specifically to "withstand at least some of the axial load produced by the disc on the seal." The structure described in the Specification as corresponding to this function is shaft 27 with flanging 30, and thrust-bearing plate 31. We construe the limitation as directed to this structure, and equivalent structures.

2. "supported rotatably in the movable portion" (claims 1, 10)

Claim 1 recites that the thrust-bearing element is "supported rotatably in the movable portion" of the housing of the seed distribution element. Ex. 1001, claim 1. Petitioner contends that the thrust-bearing element "supported rotatably in the movable portion" means "located in the movable portion, however the element may be rotatably supported." Pet. 25–26. Petitioner further contends that "[w]hile the sole embodiment of the '121 patent discloses the thrust-bearing element being mounting ***on*** the movable portion, . . . the broader word 'in' is recited in the claims." *Id.* at 25. Thus, according to Petitioner, "the claims require only that the thrust-bearing

element be ***located within*** the confines of the movable portion—not necessarily ***supported by*** or otherwise ***affixed to*** the movable portion."

In our Institution Decision "we accord[ed] this phrase its plain meaning: supported rotatably in the space defined by the movable portion." Dec. 11. Patent Owner did not respond to this construction or offer an alternative construction in its Patent Owner Response.

After oral argument we invited the parties to address whether "thrust-bearing element . . . supported rotatably in the movable portion" requires the *entire* thrust-bearing element to be in the movable portion. Ex. 3004. We also invited the parties to address the relevance to this construction of the teaching at column 4, lines 7 through 9 of the '121 patent that one of the "principle advantages of the distribution element according to the invention" is that "the system additionally lends itself to easy retrofitting, all without removing movable parts and/or operations of disconnecting the sowing disc," and whether that advantage would be achieved if a portion of the thrust-bearing element remains in the fixed portion. *Id.* (quoting Ex. 1001, 4:7–9).

In its Post-Hearing Response, Petitioner stated that "[a]lthough the preferred embodiment places the disclosed structure of the TBE entirely within the movable portion, it would be error for the Board to import such a limitation from the specification into the claims." Pet Post-Hearing Resp. 1. Petitioner contends that easy retrofitting is but one of several "principle advantages" the Specification discusses, and the claims should not be "construed as limited to structures that are capable of achieving all of the objectives" unless the Specification clearly disclaims all but those structures. *Id.* at 2–3 (quoting *Liebel-Flarsheim Co. v. Medrad, Inc.*, 358 F.3d 898, 910

(Fed. Cir. 2004)). Petitioner asserts that the '121 patent does not clearly limit the scope of the claims to seed distribution elements in which the thrust-bearing element is supported rotatably entirely in the movable portion because there is no evidence that the easy-retrofitting advantage "could not be achieved with a TBE that is partially outside the movable portion when assembled." *Id.* at 3. Petitioner also contends that claim 10, which recites a kit for retrofitting seed distribution elements, does not require the thrust-bearing element to be located entirely within the movable portion. According to Petitioner, "[b]ecause claim 10 recites that the kit 'comprises' the movable portion pre-assembled with a TBE, it does not exclude a kit that includes both the movable portion and fixed portion—or one or more elements therein—pre-assembled with a TBE." *Id.* at 4–5. Moreover, Petitioner argues:

> [E]ven a pre-assembled movable portion alone could include parts of the TBE—like Fiorido's centering dowel and drive pin . . .—that, when assembled with the rest of the seed distribution element, could protrude beyond the movable portion, through the sowing disc, and into the fixed portion, one boundary of which is delimited by the opposing side of the sowing disc.

Id. at 5.

Patent Owner disagrees with Petitioner's construction and contends that the scope of the claims should be limited to only cover seed distribution elements in which the thrust-bearing element is entirely in the movable portion. PO Post-Hearing Resp. 1–3. Patent Owner asserts that the preferred and sole embodiment, as Petitioner acknowledges, "places the disclosed structure of the TBE entirely within the movable portion." PO Post-Hearing Resp. 2 (citing Pet. Post-Hearing Resp. 1). Patent Owner contends that the easy-retrofitting advantage "derives from the fact that the

TBE is entirely mounted on the movable portion thereby making it easier to replace the movable portion as a whole when compared to a TBE partially or entirely mounted on the fixed portion." *Id.* at 1. Patent Owner supports this assertion with the Specification's teaching that "[t]he whole of the movable portion 12 **complete with thrust[-]bearing element 26** . . . lends itself advantageously to the production of a kit for the retrofitting of existing seed drills." *Id.* at 1–2 (quoting Ex. 1001, 3:60–64 (alteration added by Patent Owner)).

The question is not whether the patentee disclaimed coverage over structures in which the thrust-bearing element is not located entirely in the movable portion of the housing. Instead, we must simply ascertain what the patentee meant by "supported rotatably in the movable portion." To answer this question, we look to the Specification, which "is the single best guide to the meaning of a disputed term." *Phillips*, 415 F.3d at 1315. "The construction that stays true to the claim language and most naturally aligns with the patent's description of the invention will be, in the end, the correct construction." *Id.* at 1316. Here, it is undisputed that in the sole embodiment described by the '121 patent, the thrust-bearing element is supported by and entirely within the movable portion of the housing. Ex. 1001, Figs. 1, 2; Pet Post-Hearing Resp. 1; PO Post-Hearing Resp. 2. Construing "in the movable portion" to require the thrust-bearing element to be entirely within the movable portion both "stays true to the claim language and most naturally aligns" with the sole disclosed embodiment. Such a construction does not import the word "entirely" from the sole embodiment into the claims because the construction "arises from the claim language itself." *See SharkNinja Operating LLC v. iRobot Corp.*, 2024 WL 1132219,

*2–*3 (Fed. Cir. 2024) (construing "primary brush assembly disposed within the round housing perimeter" to require that the primary brush assembly be "entirely within" the round housing perimeter is not an improper incorporation of "entirely" from embodiments into the claims because the construction "arises from the claim language itself").

Accordingly, having reviewed the complete record and the parties' pre- and post-hearing briefing, we determine that "supported rotatably in the movable portion" means supported rotatably entirely in the space defined by the movable portion.

3. "transmission drive shaft" (claims 1, 10)

Claim 1 recites that the sowing disc is "rotated by a motor-driven transmission shaft." Ex. 1001, claim 1. Petitioner asserts that the transmission drive shaft should be construed to be in the fixed portion of the housing because the Specification states that "[t]he presence of the transmission *requires* the shaft 20 to be *mounted on the fixed portion* of the housing," and "[e]lsewhere, the description states 'it is *obligatory to mount on the fixed portion* the transmission which drives in rotation the motor-driven shaft that rotates the disc." Pet. 27 (quoting Ex. 1001, 1:63–65, 2:64–65) (alternation in original). Petitioner further asserts that we should limit the scope of "transmission drive shaft" to mean a "drive shaft centered relative to the sowing disc" because Patent Owner, in a European Patent Office ("EPO") opposition proceeding, argued that Amazone's "peripherally driven shaft in the prior-art instruction manual is not a 'transmission drive shaft' as understood in the claims and disclosed in the specification of the '121 patent." *Id.* at 28–30. Patent Owner did not respond to Petitioner's

construction or offer an alternative construction for this term in its Patent Owner Response.

In the Institution Decision we applied the plain meaning of "transmission drive shaft," which we determined to be "a shaft that is driven by a motor and is part of, or associated with, a transmission." Dec. 11. We also declined to limit the construction of this term in the manner Petitioner proposed. *Id.* We disagreed that the excerpts from the Specification on which Petitioner relies limit the meaning of "transmission drive shaft" to a shaft located on the fixed portion of the housing. *Id.* at 12. As we then stated, determining whether a specification describes an embodiment of the invention or the invention itself "turns on how the specification characterizes the claimed invention." *Alloc, Inc. v. Int'l Trade Comm'n*, 342 F.3d 1361, 1370 (Fed. Cir. 2003). We look "to whether the specification refers to a limitation only as a part of less than all possible embodiments" or whether "the specification read as a whole suggests that the very character of the invention requires the limitation be a part of every embodiment." *Id.* We found that neither Specification excerpt on which Petitioner relies expressly describes the "invention." Dec. 12. Instead, we found that the Specification's teaching that "in the known machines . . . it is obligatory to mount on the fixed portion the transmission which drives in rotation the motor-driven shaft which rotates the disc" appears to be describing prior-art seed distributors and is not intended to describe the invention itself. *Id.* We also found that the second excerpt on which Petitioner relies is part of a description of "a preferred exemplary embodiment," and a "non-limiting example," of the invention, rather than a description of the invention itself.

Id. (citing Ex. 1001, 2:20–22). Finally, we determined that the '121 patent did not limit the meaning of this term by implication. We stated:

> While it is true that "[e]ven when guidance is not provided in explicit definitional format, the specification may define claim terms by implication such that the meaning may be found in or ascertained by a reading of the patent documents," *Irdeto Access, Inc. v. Echostar Satellite Corp.*, 383 F.3d 1295, 1300 (Fed. Cir. 2004), that does not appear to be the case here. In stating that "[t]he presence of the transmission requires the shaft 20 to be mounted on the fixed portion 11 of the housing 10," the patentee appears to be reflecting their understanding of the "known machines" discussed in the first excerpt, i.e., that it is "obligatory" to mount the transmission "on the fixed portion." That the preferred embodiment is implemented on a prior-art "known machine" is not surprising given the Specification's teaching that the invention "lends itself to easy retrofitting." Ex. 1001, 4:7–8. It is therefore understandable that a description of a preferred embodiment of the invention may include a description of a prior-art device on which the invention is implemented. Doing so, by itself, does not justify considering all aspects of that prior-art device to be required by the claims.

Id. at 12–13.

We determined to be unpersuasive Petitioner's proposal to limit "transmission drive shaft" to shafts that are located at the center of sowing discs. Dec. 13. We noted that Petitioner offered no textual support for this construction, and we found none in the Specification. *Id.* We declined Petitioner's invitation to rely on extrinsic evidence (Patent Owner's statements to the EPO) to limit claim scope where the intrinsic evidence does not appear to support that limitation. *Id.*; *see Profectus Tech. LLC v. Huawei Techs. Co.*, 823 F.3d 1375, 1380 (Fed. Cir. 2016) ("Although courts are permitted to consider extrinsic evidence (e.g., expert testimony,

dictionaries, treatises), such evidence is generally of less significance than the intrinsic record.”).

Neither party responded to our analysis in our Institution Decision or otherwise addressed the proper construction of “transmission drive shaft” in subsequent briefing. Further, we are not aware of any evidence added to the record after institution that persuades us to modify our initial construction of this claim language. Accordingly, for the reasons set forth above and in our Decision on Institution, we construe “transmission drive shaft” to be “a shaft that is driven by a motor and is part of, or associated with, a transmission.” We decline to limit this term to require that the transmission drive shaft be in the fixed portion of the housing, or that it be centered on the sowing disc.

D. Ground 1: Anticipation of Claims 1–3, 7–12, and 16 by VenHuizen

Petitioner contends that claims 1–3, 7–12, and 16 are anticipated by VenHuizen. Pet. 36–56. Patent Owner opposes. PO Resp. 17–23.

1. VenHuizen (Ex. 1006)

VenHuizen is titled “Device for Improving the Spacing between Seeds Planted by a John Deer Vacuum Planter.” Ex. 1006, Code (54).[11] There is no dispute that VenHuizen is prior art.

[11] The ’121 patent identifies VenHuizen (U.S. Pat. No. 7,228,807) as describing an example prior-art seed distribution element. Ex. 1001, 1:24–37. VenHuizen, in turn, describes a John Deere 7200 Max Emerge planter. Ex. 1006, 5:13–58, Figs. 1–3.

Figures 6, 7, and 8 of VenHuizen are reproduced below:

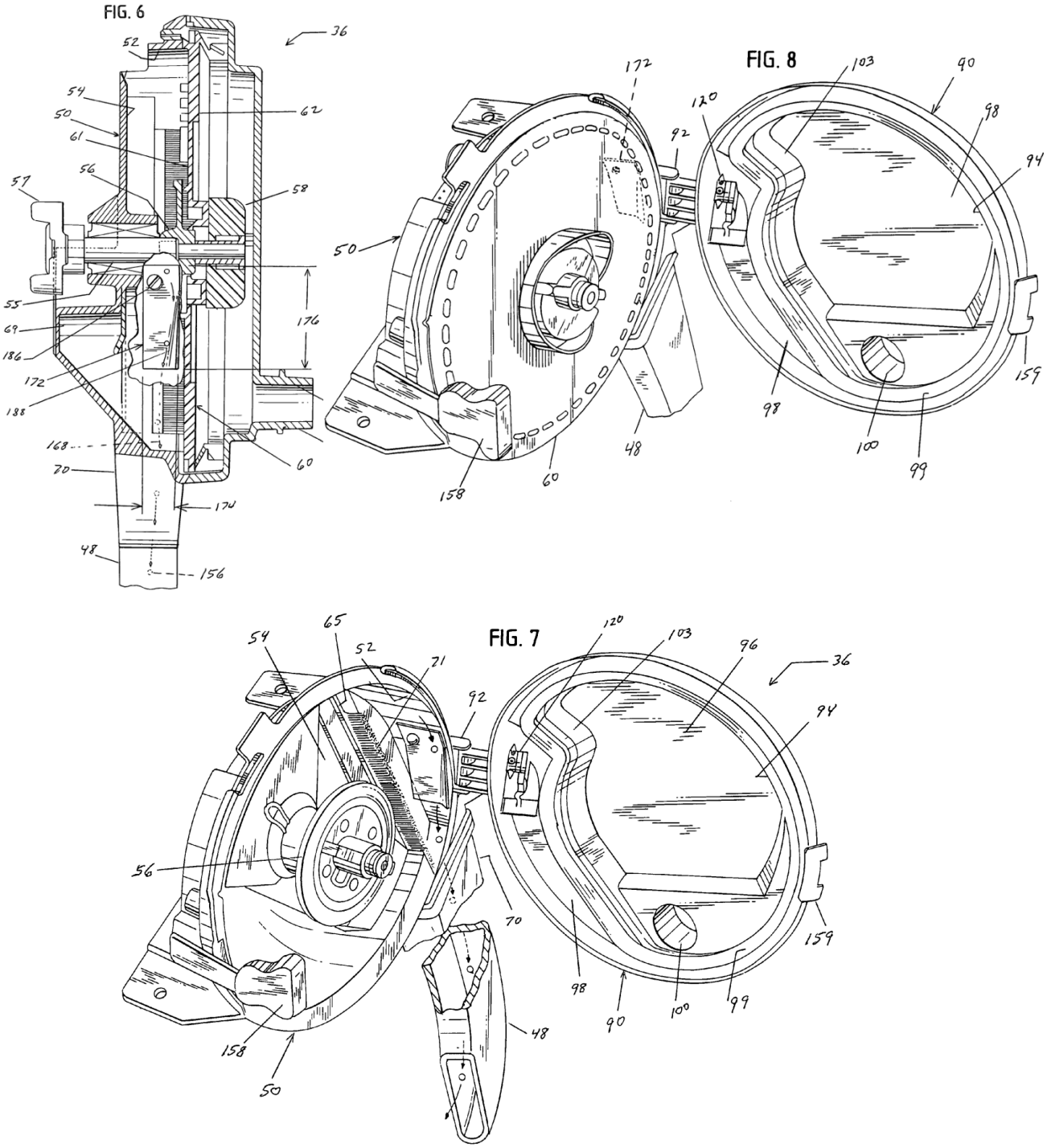

Figures 6 (top-left), 8 (top-right), and 7 (bottom) depict metering unit 36 comprising first housing member 50 attached by pivot pin 92 to second

housing member 90. Ex. 1006, 5:59–64, 7:19–21. First housing member 50 comprises a generally cylindrical outer wall 52 and a planar rear wall 54 that form a cavity. *Id.* at 5:60–62. Tubular retaining hub 56 extends from wall 54 axially with respect to cylindrical outer wall 52 and has at its distal end handle 58, which "removably retain[s]" seed disk 60 on hub 56 and drive shaft 55. *Id.* at 5:62–64, 7:19–36. Retaining hub 56 is threaded on cylindrical drive shaft 55 and locked to the shaft by locking pin 59. *Id.* at 6:1–18.

Drive shaft 55 and seed disk 60 are driven by a "driving member" via flanges 57 at the distal end of drive shaft 55. Ex. 1006, 6:1–4. When housing members 50 and 90 are latched together, seed disk 60 divides the interior of the metering unit 36 into a first chamber in first housing member 50 and a second chamber in second housing member 90. *Id.* at 7:48–54. In operation a vacuum is drawn in the second chamber and as the seed disk 60 rotates through a mass of seeds, "one seed is drawn by the vacuum against each of the transverse holes" of the seed disk. *Id.* at 7:59–62, 8:5–7.

2. Claim 1

a. <u>The Parties' Positions</u>

Petitioner contends that VenHuizen discloses the seed distribution element recited in claim 1, specifically asserting that: (1) first housing member 50 corresponds to the claimed fixed portion defining a seed collection chamber (limitations [iii] and [iv]); (2) second housing member 90 corresponds to the claimed movable portion defining a pneumatic suction chamber (limitations [iii] and [v]); (3) seed disk 60 corresponds to the claimed sowing disc having selector holes, interposed between the fixed and movable portions, and having opposing surfaces delimiting the chambers

(limitations [ii], [vi], and [vii]); (4) rubberized sealing member 99 corresponds to the claimed seal arranged on the movable portion and capable of sliding contact with the facing surface of the disc when the fixed and movable portions are closed against one another (limitation [viii]); and (5) handle 58 corresponds to the claimed thrust-bearing element supported rotatably in the movable portion in order to withstand at least some of the axial load produced by the disc on the seal (limitations [x] and [xi]). *Id.* at 38–48. Regarding the latter limitation, Petitioner submits that the hub handle is supported rotatably in the movable portion because "when the movable portion of the housing is closed onto the fixed portion, the hub-mounted handle (i.e., thrust-bearing element) is positioned within the movable portion of the housing," and because it is "locked to the [retaining] hub," it is "rotatably mounted and retains the disk against the vacuum." *Id.* at 46 (citing Ex. 1006, 6:62–64, 6:1–4, Fig. 6; Ex. 1003 ¶ 87). Petitioner also contends that handle 58 "constrains the movement of the seed disk when a vacuum is applied." Pet. 45–46 (citing Ex. 1006, 5:62–67, 6:20–28, Ex. 1003 ¶¶ 85, 86).

Patent Owner responds, *inter alia*, that VenHuizen's hub handle 58 does not correspond to the claimed thrust-bearing element as that term is correctly interpreted. PO Resp. 18–19. Patent Owner notes that "[a]lthough the handle 58 is located within the physical confines of the movable second housing member 90 when the two housing portions are closed together and not before, the handle 58 is <u>rotatably supported</u> by the retaining hub 56 in the fixed first housing member 50." *Id.* at 20. Patent Owner asserts that "VenHuizen also does not disclose or suggest . . . a shaft rotatably mounted in the movable portion." *Id.* at 21 (citing Ex. 2012 ¶ 60). According to

Patent Owner, "the retaining hub 56 is threaded on the drive shaft 55, both of which are located in the fixed portion 50 of the housing, and the handle 58 is located on the distal end of the retaining hub." *Id.* at 22–23.

Petitioner replies that even if the thrust-bearing element is construed as a means-plus-function claim limitation, VenHuizen still anticipates claim 1. Pet. Reply 17–19. Petitioner asserts that "VenHuizen's shaft, hub, and handle constitute the 'thrust-bearing element' under a proper means-plus-function definition." *Id.* at 18–19. Petitioner provides a colorized version of Figure 6 of VenHuizen (*id.* at 18) to identify these structures, which we reproduced below:

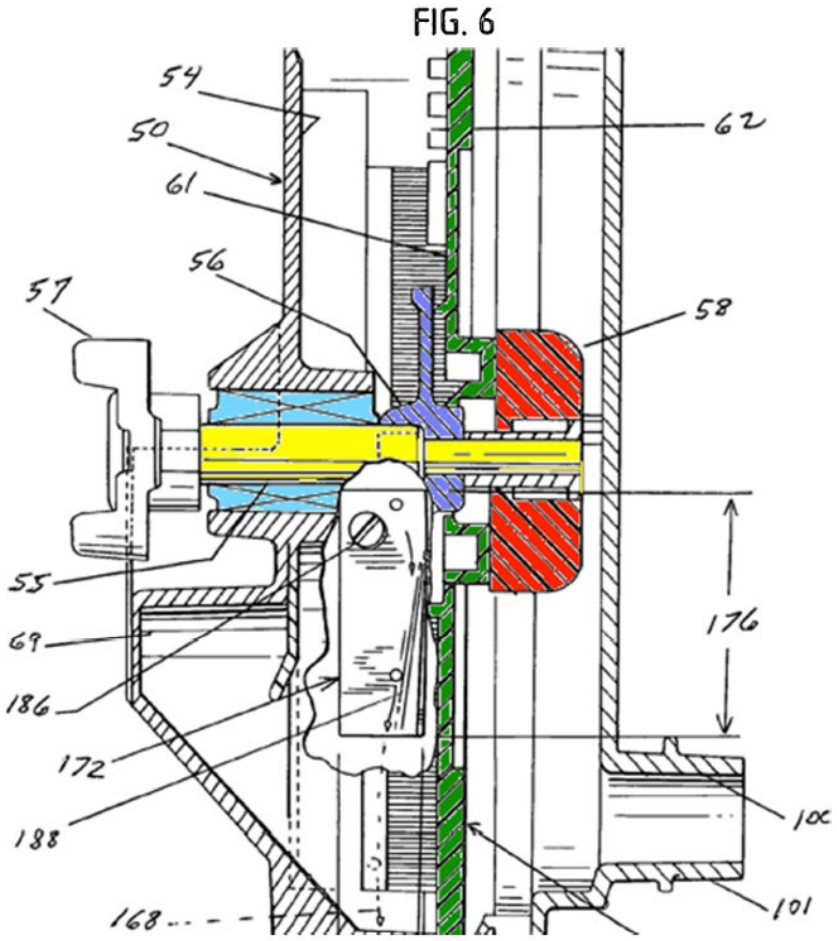

As Petitioner describes its colorized version of Figure 6 of VenHuizen, "shaft [55] (yellow) holds handle [58] (red) locked to the shaft via hub [56] (purple) to ensure it spins with the sowing disc and retains the disc against forces from the vacuum." *Id.* (citing Ex. 1021 ¶ 23). Petitioner's version of Figure 6 also highlights sowing disc 62 in green and "a seat with bearings marked by X's" in light blue. *Id.* at 17. According to Petitioner, even if shaft 55, retaining hub 56, and handle 58 "do not literally meet the TBE requirements, VenHuizen's structure is still anticipatory as equivalent structure." *Id.* at 19.

In its Sur-reply, Patent Owner responds that "neither the shaft nor the hub (or, for that matter any bearings or seat) are located in or on the movable portion of the housing." PO Sur-reply 16. Patent Owner further contends that VenHuizen's "handle alone cannot perform the function that [Petitioner] attributes to it; the shaft, bearings, and hub located on one side, and the handle located on the opposite side, of the disk combine to pin the disc between them (i.e., to constrain movement of the disc)." *Id.* at 18. Patent Owner submits that "only the handle of VenHuizen is located in (and not on) the movable portion and only then after the housing is closed," but "VenHuizen's drive shaft 55, bearings (X), and retaining hub 56 are located in the fixed housing and on the opposite side of the sowing disk from the handle." *Id.* at 19.

b. When "Thrust-Bearing Element" is Construed as a Means-Plus-Function Claim Limitation, there is Insufficient Evidence in the Record to Support a Finding that VenHuizen Discloses a Thrust-Bearing Element that is Supported Rotatably in the Movable Portion

As noted above, Petitioner contends that VenHuizen's shaft 55, retaining hub 56, and handle 58 together constitute the claimed thrust-bearing element "under a proper means-plus-function definition." Pet. Reply 18–19.[12] We do not discern sufficient evidence of record or persuasive technical reasoning from Petitioner to support a finding that these elements together are "supported rotatably in the movable portion" of the housing, as claim 1 requires. Ex. 1001, 4:38–39. We construed this limitation to require the thrust-bearing element to be supported rotatably entirely in the space defined by the movable portion (the space defined by VenHuizen's second housing member 90). Petitioner does not contend, much less show, that these components are supported rotatably entirely in the movable second housing member 90. On the contrary, of the three components constituting VenHuizen's thrust-bearing element, all of retaining hub 56 and most of shaft 55 are located in the fixed portion of the housing (first housing member 50), not the movable portion 90. *See* Ex. 1001, Fig. 6. Only handle 58 is ever located in the movable portion (when the fixed and movable portions are joined together). *See id.* Accordingly, Petitioner has not shown that VenHuizen discloses a thrust-bearing element rotatably supported in the movable portion.

[12] For purposes of this discussion, we assume without deciding that this structure is equivalent to the corresponding structure disclosed in the '121 patent.

c. Even Under Petitioner's Proffered Construction of "Thrust-Bearing Element," there is Insufficient Evidence in the Record to Support a Finding that VenHuizen Discloses a Thrust-Bearing Element that is Supported Rotatably in the Movable Portion

Petitioner originally argued that "thrust-bearing element" should be construed as "an element that provides support against an axial force." Pet. 22. Petitioner contended that VenHuizen's handle 58, by itself, corresponds to the thrust-bearing element under this construction, because it "constrains the movement of the seed disk when a vacuum is applied." *See Id.* at 45. We know from the Rebuttal Declaration of Petitioner's expert, Dr. Fleming, however, that the handle does not perform this function by itself. Dr. Fleming makes clear that withstanding at least some of the axial load produced by the sowing disc on the seal requires "a structure having a conforming surface area contacting the disc, and *additional structure* for transferring thrust to a fixture (i.e., the housing) where it will ultimately be absorbed." Ex. 1021 ¶ 14 (emphasis added). For VenHuizen, Dr. Fleming submits that this additional structure incudes "a shaft (drive shaft 55) that holds a structure (handle 58) locked to the shaft (via hub 56) to ensure it spins with the seed disc and retains the disc against forces from the vacuum." *Id.* ¶ 23. According to Dr. Fleming, "[t]he handle has a surface area in contact with the seed disc to resist axial load, spins with the seed disc because it is connected to the drive shaft through interlocking with the hub, and the shaft transfers the force absorbed by the handle to a fixture." *Id.*

We agree with Dr. Fleming that handle 58 plus shaft 55 and retaining hub 56 are required to withstand at least some of the axial load produced by the disc on the seal. VenHuizen teaches that handle 58 is part of retaining

hub 56, and the retaining hub is attached to shaft 55. *See* Ex. 1006, 5:63–64 (describing "a tubular retaining hub 56 at the distal end of which is a handle 58"); *id.* at 6:1–18 (stating that "retaining hub 56 is threaded on" shaft 55 and locked in place by locking pin 59). Thus, axial load from disc 60 against handle 58 when a vacuum is drawn is resisted not just by handle 58 but by retaining hub 56 via its connection to the handle, and by shaft 55 via its connection to the retaining hub.

Neither the Petition nor Dr. Fleming's original Declaration acknowledges that the "element that provides support against an axial force," as Petitioner construes "thrust-bearing element," includes retaining hub 56 and shaft 55 in addition to handle 58. *See* Pet. 45 ("This hub handle [58], which constrains the movement of the seed disk when a vacuum is applied, constitutes a thrust-bearing element."); Ex. 1003 ¶ 86 (same). The Petition thus fails to establish that VenHuizen discloses the claimed thrust-bearing element. The Petition's contention that VenHuizen's thrust-bearing element is "supported rotatably in the movable portion" also fails because it is incorrectly premised on handle 58 alone corresponding to the claimed thrust-bearing element. Pet. 46–47; Ex. 1003 ¶ 87.

Applying Petitioner's construction of "thrust-bearing element" originally proposed in the Petition—"an element that provides support against an axial force"—to its description of the structure needed to provide support against an axial force—shaft 55, retaining hub 56, and handle 58—Petitioner would still fail to show that VenHuizen discloses this limitation. As discussed above, only handle 58 and part of shaft 55 are "in the movable portion" of VenHuizen's housing.

Because Petitioner has not shown that VenHuizen discloses a thrust-bearing element supported rotatably in the movable portion of the housing, Petitioner has not shown that VenHuizen anticipates claim 1.

3. Claim 10

Claim 10 is drawn to a kit for retrofitting seed distribution elements of the type recited in claim 1, the kit comprising the movable portion pre-assembled with a "thrust-bearing element . . . supported rotatably in the movable portion in order to withstand at least some of the axial load produced by the disc on the seal." Ex. 1001, 5:4–6:6. Because claim 10 recites the same thrust-bearing element as claim 1, for the reasons stated above, we find that Petitioner has not shown that VenHuizen anticipates claim 10.

4. Claims 2, 3, 7–9, 11, 12, and 16

Claims 2, 3, and 7–9 ultimately depend from claim 1, and claims 11, 12, and 16 depend from claim 10. Because Petitioner has not shown that VenHuizen anticipates claims 1 and 10, Petitioner likewise has not shown that VenHuizen anticipates these dependent claims.

E. Ground 2: Anticipation of claims 1–5 and 10–14 by Fiorido

Petitioner contends that Fiorido anticipates claims 1–5 and 10–14 of the '121 patent. Pet. 56–71. Patent Owner opposes. PO Resp. 23–38.

1. Fiorido

Fiorido describes a pneumatic single-seed planter using a seed disk with perforations that "have an elongated shape and a reduced cross-section," along with an adjustable "selector element" that cooperates with the perforations to ensure that only a single seed is retained in each

perforation regardless of the shape and size of the seed and without having to change seed disks for different seed types. Ex. 1007, Abstr., 1:23–24, 5:56–6:29, 7:35–45.

Figures 1–3 of Fiorido are reproduced below:

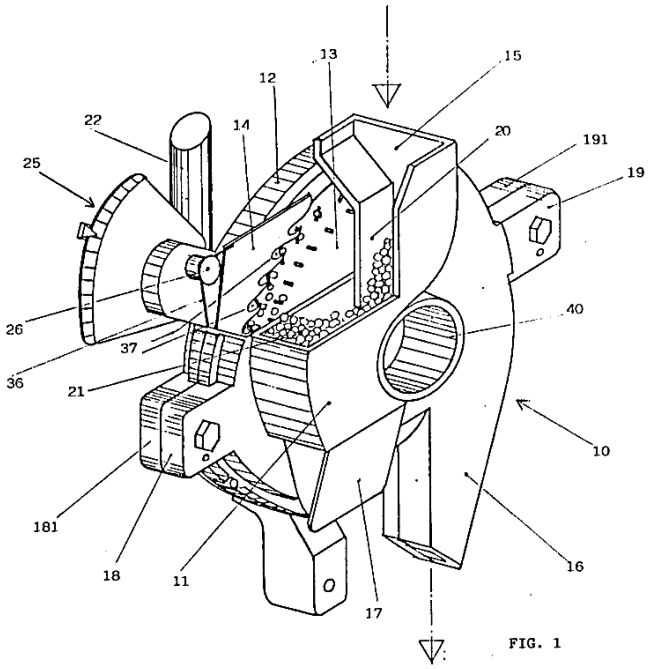

FIG. 1

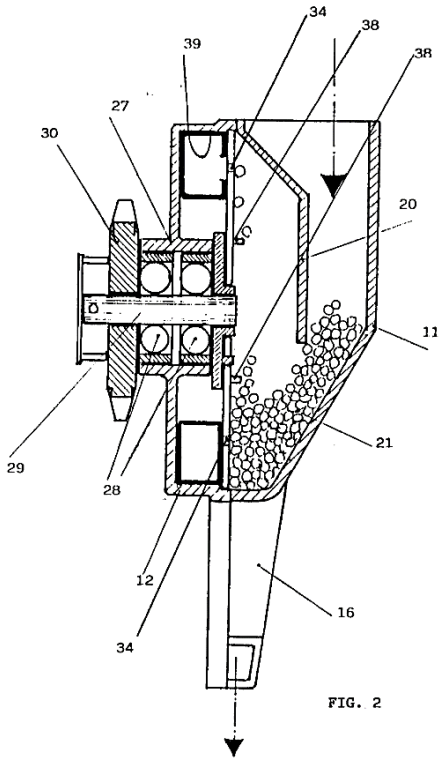

FIG. 2

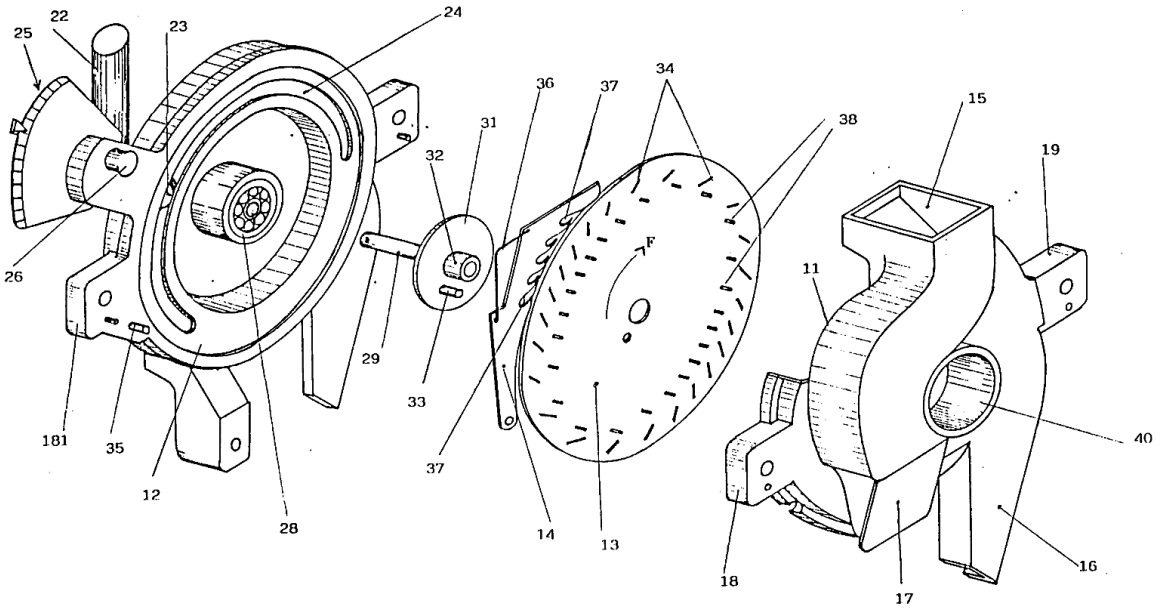

FIG. 3

Figures 1 (top-left), 2 (top-right), and 3 (bottom) depict perspective, cross-sectional, and perspective, exploded views, respectively, of Fiorido's single-seed distributor means. As shown in Figures 1–3, Fiorido discloses single-seed planter 10 "essentially formed by a seed container 11 and a box-like casing 12, with a perforated disk 13 associated with selector element 14, arranged therebetween." Ex. 1007, 5:10–13. Seed container 11 "is further provided with projections 18, 19 that are adapted to cooperate with respective projections 181 and 191 of the casing 12 to effect the connection and the closure (by means of holes, pins, and bolts) of the container 11 with casing 12." *Id.* at 5:22–27.

Casing 12 is connected to a vacuum source to draw seeds from seed container 11 onto the perforations of disk 13 as the disk rotates through the container. *Id.* at 5:33–39, 7:29–32. Casing 12 "is also provided with a perforated hub 27 . . . through which passes, as supported by bearings 28, a shaft 29 that may for instance be driven though a cog-wheel 30 to rotatably drive the disk 13, to which it is connected by means of a driving disk 31, a centering dowel 32 and a driving pin 33." *Id.* at 49–55. Seed container 11 may also be provided with "a central opening 40 . . . to possibly introduce the support and driving elements for the disk 13 from the opposite side of the device, as opposed to the arrangement shown in [Figures 1 and 2]." *Id.* at 8:1–6.

2. Claim 1

Petitioner contends that Fiorido discloses all of the limitations of the challenged claims. Pet. 56–71. For example, Petitioner asserts that Fioridos's: (1) disk 13 corresponds to the claimed sowing disc; (2) shaft 29

corresponds to the claimed motor-driven transmission drive shaft; (3) seed container 11 corresponds to the claimed fixed portion that defines a seed collection chamber; (4) casing 12 corresponds to the portion that is movable relative to the fixed portion and that defines a pneumatic suction chamber; (5) disk 13 is interposed between seed container 11 and casing 12; (6) hollow sealing ring 39 corresponds to the claimed seal arranged on the movable portion; and (7) the combination of shaft 29, driving disk 31, centering dowel 32, and driving pin 33 corresponds to the claimed thrust-bearing element. *Id.*

Regarding the thrust-bearing element limitation, Petitioner contends that "[t]he driving disk mounts against the perforated disk constraining the movement of the disk in the axial direction when a vacuum is applied . . . in the pneumatic suction chamber." *Id.* at 64 (citing Ex. 1003 ¶ 99). Petitioner further asserts that this combination of elements is supported rotatably in the movable portion in order to withstand at least some of the axial load produced by the disc on the seal, because "Fiorido's shaft, bearings, and driving disk are rotatably supported by bearings in the casing [12] (movable portion of the housing)." *Id.* at 65. In our Decision on Institution, we did not find Petitioner's arguments persuasive, based on the record at that time. *See* Dec. 30–34.

Patent Owner first responds that "Fiorido fails to disclose or suggest a housing with a fixed portion and <u>a portion which is movable relative to the fixed portion</u> and can be closed against the fixed portion." PO Resp. 24. Patent Owner asserts that "Fiorido minimizes the need to access and replace disks, which is a purpose of splitting the housing into movable and fixed portions." *Id.* at 27. Patent Owner submits that "[b]ecause neither of the

housing components in Fiorido is movable relative to the other, Precision is able to 'cherry pick' and inconsistently (and improperly) define both of the housing components as 'movable' in different portions of its analysis." *Id.* at 30–31 (citing Pet. 56–57, 64-65).

Patent Owner further argues that "Fiorido does not disclose or suggest a TBE that functions 'to withstand at least some of the axial load produced by the disc on the seal.'" PO Resp. 34. Patent Owner contends that the structure that Petitioner asserts corresponds to Fiorido's thrust-bearing element—shaft 29, driving disk 31, centering dowel 32, and driving pin 33—"rotatably drive[s] the [sowing] disk 13," but "[t]he driving disk and sowing disk are not necessarily rigidly attached nor does the face of one necessarily touch or contact the face of the other." *Id.* (citing Ex. 1007, 5:49–55; Ex. 2012 ¶ 69). Thus, argues Patent Owner, "the driving disk and sowing disk do not necessarily transfer any axial load whatsoever." *Id.* (citing Ex. 2012 ¶ 70). In fact, according to Patent Owner, Fiorido teaches that sealing ring 39 positioned between casing 12 and disk 13 "ensure[s] correct positioning" of the casing and disk, which suggests that "a gap may exist between the faces [of disk 13 and driving disk 31]." *Id.* at 35 (citing Ex. 2012 ¶ 71). Patent Owner submits that Dr. Fleming's statement that the driving disk "withstand[s] some of the load applied to the seal by the disk when a vacuum is applied" (Ex. 1003 ¶ 99) "is devoid of any citation to Fiorido itself," and therefore should be "disregard[ed]." *Id.* at 37.

Petitioner did not address Ground 2 in its Reply Brief.

The record does not support a finding that Fiorido anticipates claim 1. First, Petitioner has not established a reasoned basis for determining which of Fiorido's seed container 11 or casing 12 corresponds to a fixed portion as

opposed to a movable portion. The Specification describes the "fixed portion" as that portion that is fixed to the framework of the sowing elements. Ex. 1001, 1:57–59. This implies that the movable portion is not fixed to the framework of the sowing elements. Petitioner has not shown which of seed container 11 or casing 12 is fixed to the framework of seed planter 10, and whether the other is not fixed to the framework. Petitioner contends that casing 12 is the fixed portion because shaft 29 and driving disk 31 are located there. *See* Pet. 56–57 ("The driveshaft [29] is on the fixed portion of the housing."); Ex. 2014, 56:3–20 (Dr. Fleming testifying at his deposition that Fiorido's drive components—e.g., bearings 28, shaft 29, and cogwheel 30—"would require some structure to support them" and therefore "would have to be on the fixed portion."). As a result, Fiorido does not disclose the limitations in claim 1 requiring the pneumatic suction chamber to be defined in, the seal to be arranged on, and the thrust-bearing element to be supported rotatably in the movable portion.

Further, as Patent Owner notes (PO Resp. 30–32), the Petition alternatively describes casing 12 as the fixed portion and the movable portion, depending on which limitation is discussed. Pet. 56–57, 65. For example, the Petition asserts that shaft 29, which Petitioner contends corresponds to the claimed motor-driven transmission shaft and which is located in casing 12 (Fiorido, 5:49–51, Figs. 2, 3), is "on the fixed portion of the housing." Pet. 56–57; Ex. 1003 ¶ 90 (same). If so, as noted above, several limitations in claim 1 would not be disclosed. But Petitioner predominately identifies casing 12 as the movable portion of the housing because that is where Fiorido's pneumatic suction chamber is located. *Id.* at

58–60. Petitioner illustrates this identification in its annotated version of Figure 3 of Fiorido, reproduced below:

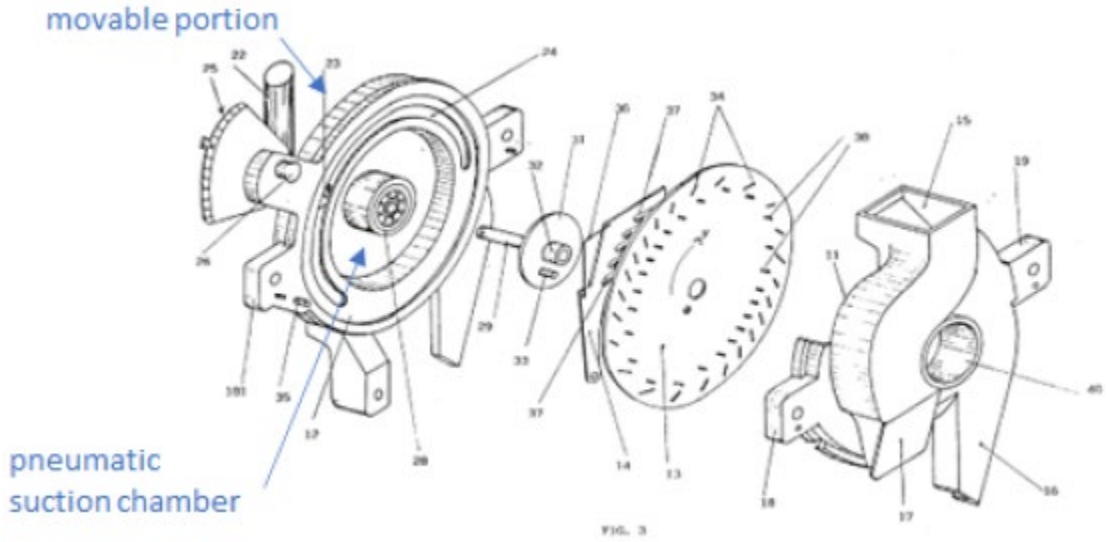

In Petitioner's annotated version of Fiorido's Figure 1, Petitioner labels casing 12 as the movable portion and seed container 11 as the fixed portion. *Id.*

Petitioner asserts, however, that "[t]o the extent it is argued that the seed collection chamber is not defined in the fixed portion and the suction chamber is not defined in the movable portion, Fiorido teaches a POSA that the fixed and movable sides may be swapped because the motor-driven transmission drive shaft can be introduced on either side." Pet. 59–60. Petitioner is referring to Fiorido's teaching that "seed container 11 may be provided with a central opening 40 (Figures 1 and 2) to possibly introduce the support and driving elements for the disk 13 from the opposite side of the device, as opposed to the arrangement shown in the accompanying drawing." Ex. 1007, 8:1–6. We do not read this excerpt as teaching that "the fixed and movable sides may be swapped" (Fiorido does not expressly teach that either of seed container 11 or casing 12 is "fixed" or "movable")

but only that the support and driving elements for disk 13 may be "swapped," i.e., moved from casing 12 to seed container 11. To the extent that moving the driving element to seed container 11 makes seed container 11 the fixed portion, then the structure that Petitioner asserts corresponds to the claimed thrust-bearing element would not be in the movable portion, as claim 1 requires. If, alternatively, seed container 11 is the movable portion, then limitation [1.iv], which recites a seed collection chamber being defined in the fixed portion," would not be met.

Petitioner further asserts that "as admitted in the '121 patent, a POSA knows the seal's thrust-bearing must be on the suction side to alleviate axial load on the seal." Pet. 60 (citing Ex. 1001, 1:53–55, 63–65; Ex. 1003 ¶ 94). Thus, according to Petitioner, "Fiorido discloses either the seed or suction chamber may be on the fixed side and the function of the thrust-bearing dictates it [i.e., the thrust-bearing element] be on the suction side." *Id.* (citing Ex. 1003 ¶ 94). We understand Petitioner to be relying on the '121 patent's teaching that "seed drills have been developed which are equipped with a thrust-bearing element which relieves the heavy load on the seal. In all cases, . . . the thrust-bearing element, which must be rotated with the disc, is mounted on the fixed portion of the housing." Ex. 1001, 1:53–57, 63–65.

As discussed above, however, Fiorido does not expressly teach a fixed portion or movable portion, so it is not clear to us that "Fiorido discloses either the seed or suction chamber may be on the fixed side." Further, we do not read the above excerpts of the '121 patent as admitting that *all* seed planters were equipped with a thrust-bearing element at the time of the invention, only that some were; "in all cases" therefore refers to all seed planters equipped with thrust-bearing elements, not necessarily all seed

planters (including Fiorido's). More importantly, we do not read this statement as an admission that a thrust-bearing element, when equipped on a seed planter, will be on the suction side. This excerpt states that thrust-bearing elements have been installed on the fixed portion (Ex. 1001, 1:55–57), and, as claim 1 recites, the suction side is on the movable portion. In any event, any such admission would not be particularly relevant to whether Fiorido teaches a thrust-bearing element, or whether container 11 or casing 12 would be a fixed or movable portion.

In sum, Petitioner has not shown that Fiorido discloses "a thrust-bearing element . . . supported rotatably in the movable portion in order to withstand at least some of the axial load produced by the disc on the seal," and therefore has not shown that Fiorido discloses all of the limitations of claim 1 as arranged in that claim. For that reason, Petitioner has not shown that Fiorido anticipates claim 1.

3. Claim 10

As noted above, claim 10 is drawn to a kit for retrofitting seed distribution elements of the type recited in claim 1, the kit comprising the movable portion pre-assembled with a "thrust-bearing element . . . supported rotatably in the movable portion in order to withstand at least some of the axial load produced by the disc on the seal." Ex. 1001, 5:4–6:6. Because claim 10 recites the same thrust-bearing element as claim 1, for the reasons stated above, we find that Petitioner has not shown that Fiorido discloses this limitation. Accordingly, Petitioner has not shown that Fiorido anticipates independent claim 10.

4. Claims 2–5 and 11–14.

Claims 2–5 ultimately depend from claim 1 and claims 11–14 ultimately depend from claim 10. Because Petitioner has not shown that Fiorido anticipates claims 1 and 10, Petitioner has likewise not shown that Fiorido anticipates claims 2–5 and 11–14.

F. Ground 3: Obviousness of Claims 1–5, 7–14, and 16 over Fiorido, VenHuizen, and AAPA

Petitioner contends that claims 1–5, 7–14, and 16 would have been obvious over Fiorido, VenHuizen, and AAPA. Pet. 71–74. Patent Owner opposes. PO Resp. 38–45.

Petitioner asserts that independent claims 1 and 10 and dependent claims 2–5 and 11–14 would have been "obvious over Fiorido by itself." Pet. 72, 73. Petitioner argues that:

> To the extent that [Patent Owner] argues that Fiorido does not disclose the combination of "a pneumatic suction chamber being defined in the movable portion" and "[a] thrust-bearing element is supported rotatably in the movable portion in order to withstand at least some of the axial load produced by the disc on the seal" as arranged in the claim, Fiorido's disclosure teaches to modify Fiorido to arrive at this arrangement. As described above, Fiorido discloses that the drive element may be introduced into either side of the seed distributer housing. Further, a POSA would know that the vacuum chamber must be on the opposite side from the seed chamber. Therefore, if Fiorido's drive element is moved from one side to the other, a POSA would know Fiorido's thrust-bearing element must still be provided on the vacuum side to relieve axial load on the seal. A POSA would have a reasonable expectation of success in using the structures of Fiorido for the purpose disclosed by Fiorido.

Id. at 72; *see id.* at 73 ("Claim 10 is obvious over Fiorido by itself for the reasons discussed above with respect to claim 1."). VenHuizen and AAPA are relied on to teach limitations found in dependent claims 7–9 and 16, and not for any of the limitations of claims 1 and 10. *Id.* at 72–73.

Patent Owner responds, *inter alia*, that "[a]s stated above for Ground 2, Fiorido does not teach or suggest either a movable housing portion or a TBE of the movable housing portion." PO Resp. 39.

Petitioner did not address Ground 3 in its Reply Brief.

In our Institution Decision we stated that "[i]t is not entirely clear to us what Petitioner means by "Fiorido's thrust-bearing element." Dec. 35. We noted that "[f]or Ground 2 Petitioner alleges that Fiorido's shaft 29 and driving disk 31 correspond to the claimed thrust-bearing element," but "[t]hese components also constitute Fiorido's driving elements for disk 13, which, if introduced into container 11, would mean that the thrust-bearing element would also be in container 11, which would further mean that either limitation [iv]'s requirement that the seed collection chamber be defined in the fixed portion, or limitation's [xi]'s requirement that the thrust-bearing element be supported rotatably in the movable portion, would not be satisfied." *Id.* We further noted that "if container 11 is the movable portion and casing 12 is the fixed portion, the limitations requiring the seal and pneumatic suction chamber to be in the movable portion would not be satisfied." *Id.* at 35–36 n.12. Petitioner did not discuss Ground 3 in its Reply, and therefore did not respond to these concerns. Accordingly, for the reasons set forth above and in our Institution Decision, we determine that Petitioner has not shown that claims 1–5, 7–14, and 16 would have been obvious over Fiorido, VenHuizen, and AAPA.

G. Ground 4: Obviousness of Claims 1–3, 7–12, and 16 over Amazone, Fiorido, VenHuizen, and AAPA

Petitioner contends that claims 1–3, 7–12, and 16 would have been obvious over Amazone, Fiorido, VenHuizen, and AAPA. Pet. 75–90. Patent Owner opposes. Prelim. Resp. 49–57.

1. Amazone

Amazone is an English-language version of an operator's manual for various "ED" models of "Precision Airplanters" manufactured by Amazonen-Werke H. Dreyer GmbH & Co. Ex. 1011, 1, 3. "The ED precision planter . . . is designed for the metering and application of usual commercial kinds of seed and fertilizer." *Id.* at 41. Figures 39 and 40 of Amazone illustrate "seed metering" components of an airplanter, and are reproduced below:

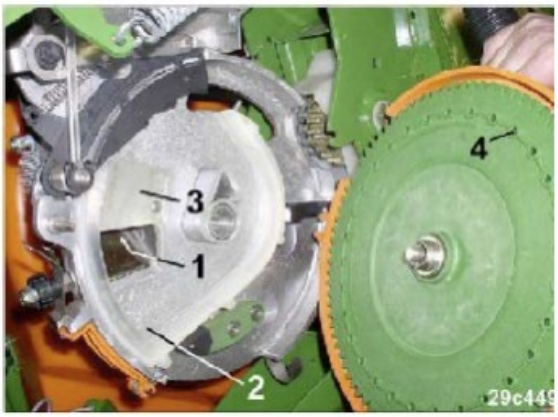

Fig. 39

Fig. 40

As depicted in Figures 39 (above-left) and 40 (above-right) of Amazone, seeds from a seed hopper fall through an opening (Fig. 39, item 1) into a "seed store area" (Fig. 39, item 2). Ex. 1011, 53. A vacuum is provided from slits (Fig. 40, item 1) of a "suction kidney," which draws seeds onto the holes (Fig. 39, item 4) of a "singling disc." *Id.* As the disc rotates, the seeds

are carried to a point (Fig. 40, item 2) where the vacuum is no longer applied and the seed drops into a seed furrow. *Id.*

2. Claim 1

a. The Parties' Positions

Although Petitioner contends that Amazone teaches most of the limitations of claim 1, Petitioner relies on Fiorido to teach the claimed thrust-bearing element. Pet. 83. Petitioner asserts that "it would be obvious to modify Amazone with the driving disk of Fiorido." *Id.* First, according to Petitioner, "Amazone teaches a seed meter and its internal components and Fiorido expressly notes its seed meter can 'be applied to any known type of planters (not shown) whatsoever'—and both have a fixed and movable sides of a vacuum-operated seed meter housing." *Id.* at 83–84 (citing Ex. 1011, 52–53; quoting Ex. 1007, 5:7–9). Petitioner argues that "[t]hese facts alone provide a motivation to combine Amazone and Fiorido." *Id.* at 84.

Second, Petitioner asserts that "a POSA reading Fiorido would understand Fiorido's driving disk structure could be adapted to be used in Amazone's disclosed structure to provide a rotating thrust-bearing element to ensure that excessive wear is not placed upon the seal disclosed in Amazone," and "[t]he Applicant admitted the wear problem and solution of a rotating thrust-bearing element were known." Pet. 84 (citing Ex. 1003 ¶ 119; Ex. 1001, 1:53–57). According to Petitioner, "Fiorido expressly suggests its driving disk thrust-bearing element can be on either side of a seed disk and a POSA would be motivated to address the known problem of seal wear with the known solution provided by Fiorido," and "would

consider this a simple rearrangement well within the ordinary level of skill." *Id.*

In response, Patent Owner refers to its previous discussion in connection with Ground 2 that "Fiorido does not disclose or suggest a TBE." PO Resp. 46.

Petitioner replies that "the AAPA acknowledges the problem of seal wear was known," and "identifies a rotatable thrust-bearing element as a known solution to that problem." Pet. Reply 25. According to Petitioner:

> While the AAPA identifies the known thrust-bearing element as being mounted on the fixed portion of the housing, as Maschio's expert admitted, a POSA looking at Amazone would have a reason to modify the movable portion of the Amazone housing with a TBE because it is the movable side of the Amazone housing that contains the vacuum and has a seal that will experience wear.

Id. (citing Ex. 1023, 136:7–137:7).

Petitioner further asserts that "Fiorido teaches a driving disk 31, centering dowel 32, and driving pin 33 'to which [perforated disk 13] is connected.'" Pet. Reply 26 (quoting Ex. 1007, 5:49–55). Petitioner contends that Figure 2 of Fiorido shows that "the driving disk 31 is in contact with the sowing disc, and a POSA would understand that driving disk 31 would absorb at least some of the axial load produced on the seal by the sowing disc when a vacuum is applied." *Id.* (citing Ex. 1003 ¶ 54). Petitioner also notes that "[a]lthough [Patent Owner] disputes whether Figure 2 actually shows the sowing disc and driving disk in contact, even its expert agrees that a POSA at the time of the '121 invention would have understood that ***if*** this structure did contact the sowing disc it would absorb some of the axial load." *Id.* (citing Ex. 1023, 127:25–129:1). Thus,

according to Petitioner, "a POSA would know of [Fiorido's structure's] ***capability*** to act as a TBE if the two disks were in contact." *Id.* at 27.

In its Sur-reply Patent Owner responds that neither Amazone nor Fiorido describes the thrust-bearing element as recited in claims 1 and 10. PO Sur-reply 22. Patent Owner further asserts that "were Amazone to be modified by a POSA to include a TBE, there would be no suggestion to place this on the movable portion because the prior art placed it on the fixed portion." *Id.* at 23.

b. Discussion

Petitioner's argument that one of ordinary skill in the art would have combined Fiorido's drive structure (shaft 29, driving disk 31, centering dowel 32, and driving pin 33) with Amazone's seed meter is based on the premise that, at the time of the invention of the '121 patent, one of ordinary skill in the art would have appreciated that this structure could be used as a thrust-bearing element and would have looked to Fiorido's drive structure as a solution to Amazone's potential seal-wear problem. *See* Pet. 84 ("[A] POSA reading Fiorido would understand Fiorido's driving disk structure could be adapted to be used in Amazone's disclosed structure to provide a rotating thrust-bearing element to ensure that excessive wear is not placed upon the seal disclosed in Amazone."). Having reviewed the evidence of record, however, we determine that there is insufficient evidence to support this premise.

First, as is undisputed, Fiorido does not expressly teach that its drive structure could be used as a thrust-bearing element, or that it withstands at least some of the axial load produced by the disk on the seal. Instead, it describes that structure briefly as follows:

> The casing 12 is also provided with a perforated hub 27 (Figure 2) through which passes, as supported by bearings 28, a shaft 29 that may for instance be driven through a cog-wheel 30 to rotatably drive the disk 13, to which it is connected by means of a driving disk 31, a centering dowel 32 and a driving pin 33 (Figures 2 and 3).

Ex. 1007, 5:49–55.

Petitioner argues, however, that Fiorido teaches that its driving structure is connected to disk 13, and Figure 2 of Fiorido shows that driving disk 31 is "in contact" with the disk. Pet. Reply 26. Petitioner thus asserts that "a POSA would understand that driving disk 31 would absorb at least some of the axial load produced on the seal by the sowing disc when a vacuum is applied." *Id.* (citing Ex. 1003 ¶ 54).

As an initial matter, Fiorido does not expressly teach that driving disk 31 is "in contact" with disk 13. Instead, it teaches that shaft 29 is connected to disk 13 via driving disk 31 centering dowel 32, and driving pin 33. Ex. 1007, 5:51–55. The only apparent contact required to fulfill the sole stated purpose of this structure, "to rotatably drive the disk 13," would be centering dowel 32 and driving pin 33 contacting the central and offset holes, respectively, of disk 13. In any event, we do not agree that any apparent contact between driving disk 31 and disk 13 shown in Figure 2 of Fiorido would have been sufficient, at the time of the invention, to teach or suggest to one of ordinary skill in the art that Fiorido's drive structure functioned as a thrust-bearing element. For example, as Patent Owner points out (PO Resp. 34–35) sealing ring 39 is also positioned next to disk 13 and appears from Figure 2 to be in contact with the disk. Ex. 1007, Fig. 2. According to Fiorido, "hollow sealing ring 39 or similar gasketing means of plastic material may be appropriately provided between the casing 12 and

the disk 13 so as to ensure correct positioning of said two elements and an effective sealing effect between them (Figure 2)." Indeed, Petitioner's Declarant, Dr. Fleming testifies that sealing ring 39 contacts disc 13. Ex. 1003 ¶ 97. Because sealing ring 39 contacts disc 13, and in the absence of any disclosure in Fiorido that driving disk 31 plays any role in absorbing axial load from the sowing disk, it is at least as likely that one of ordinary skill in the art would have understood all of the axial load from the sowing disk to be taken up by the seal as it would have been for one of ordinary skill in the art to appreciate that axial load is being shared between the seal and driving disk 31.

Dr. Fleming's opinion that "[t]he driving disk [31] adjoins the seed disk [13] and therefore absorbs a portion of the axial load" (Ex. 1003 ¶ 54) does not account for the fact that sealing ring 39 contacts disk 13, and therefore does not explain why driving disk 31 would bear some of the axial load despite this contact. For that reason, we accord Dr. Fleming's opinion in this regard little weight.

Petitioner also asserts that Patent Owner's Declarant, Dr. Dankowicz, testified that if there was contact between driving disk 31 and disk 13, driving disk 31 would absorb at least some axial load from disk 13. Pet. Reply 26 (citing Ex. 1023, 127:25–129:1). Dr. Dankowicz also testified, however, that viewing Figure 2 of Fiorido in view of the rest of Fiorido's disclosure, "I would not have drawn that or come to that understanding." Ex. 1023, 129:5–7. Ultimately, we view Dr. Dankowicz's deposition testimony as providing little support to the notion that one of ordinary skill in the art, at the time of the invention and viewing Fiorido's disclosure in its

entirety, would have appreciated that Fiorido's disk driving structure functions as a thrust-bearing element.

Petitioner also argues that one of ordinary skill in the art would have been motivated to combine Amazone and Fiorido because: (1) "Amazone teaches a seed meter and its internal components"; (2) Fiorido expressly notes its seed meter can 'be applied to any known type of planters . . . whatsoever'"; and (3) both Amazone and Fiorido "have a fixed and movable side[] of a vacuum-operated seed meter housing." Pet. 83–84.

We disagree. First, that one of ordinary skill in the art may have been motivated to use Fiorido's entire seed meter in Amazone's planter does not mean that one of ordinary skill in the art would have been motivated to incorporate one component of Fiorido's seed meter in Amazone's seed meter. Second, we disagree that Fiorido teaches the recited fixed and movable portions of a vacuum-operated seed meter housing. As discussed above in connection with Ground 2, Fiorido does not teach or suggest that one of casing 12 and seed container 11 is a fixed portion and the other is a movable portion.

Petitioner further argues that "the AAPA acknowledges the problem of seal wear was known," "identifies a rotatable thrust-bearing element as a known solution to that problem," and, based on Dr. Dankowicz's testimony, one of ordinary skill in the art would have been motivated to modify Amazone's movable portion with, presumably, the AAPA's known thrust-bearing element. Pet Reply 25 (citing Ex. 1023, 136:7–137:7). Again, we disagree. First, as stated previously, the '121 patent does not describe the structural characteristics of the prior art thrust-bearing element discussed in the portion of the '121 patent that Petitioner identifies as AAPA. There is no

reason to expect that the allegedly prior art thrust-bearing element resembles the thrust-bearing element depicted in Figure 2 of the '121 patent. As Dr. Fleming testifies, other structures, such as washers, have been known to distribute axial loads. Ex. 1003 ¶ 33.b. Second, as Petitioner acknowledges (*id.*), the AAPA states that "[i]n all cases" the prior art thrust-bearing element "is mounted on the fixed portion of the housing." Ex. 1001, 1:55–57. Third, we reviewed Dr. Dankowicz's testimony on which Petitioner relies and disagree that it supports the proposition that one of ordinary skill in the art would have been motivated to modify the movable portion of Amazone's seed meter housing with the prior art thrust-bearing element. Dr. Dankowicz acknowledges that one of ordinary skill in the art would have had a reason to address seal wear prior to the '121 patent, and would have known that rotatable thrust-bearing elements had been a prior solution to that problem, but he does not appear to agree that the skilled artisan would have adapted the known thrust-bearing element on the *movable* side. Ex. 1023, 136:7–21.

In summary, we conclude that Petitioner fails to prove that claim 1 would have been obvious over Amazone, Fiorido, AAPA, and VenHuizen. Further, because claim 10 recites the same thrust-bearing element as claim 1, we also find that Petitioner fails to prove that claim 10 would have been obvious over these references.

3. Claims 2, 3, 7–9, 11, 12, and 16

Because we are not persuaded that independent claims 1 and 10 would have been obvious over Amazone, Fiorido, AAPA, and VenHuizen, we are also not persuaded that dependent claims 2, 3, 7–9, 11, 12, and 16 would have been obvious over these references.

III. PETITIONER'S MOTION TO STRIKE

Petitioner moves to strike Patent Owner's Sur-reply. Paper 27 ("Mot. to Strike"). Petitioner contends that Patent Owner's Sur-reply presents new arguments and relies on impermissible evidence, particularly the Sur-reply declaration of its expert, Dr. Dankowicz. *Id.* at 1–5. Patent Owner opposes the motion, asserting that its Sur-reply and exhibits submitted therewith are responsive to new arguments raised in Petitioner's Reply Brief. Paper 28, 1–3.

If a party believes that a paper filed by an opposing party presents new issues, is supported by belatedly presented evidence, or "otherwise exceeds the proper scope of reply or sur-reply, it may request authorization to file a motion to strike." Patent Trial and Appeal Board Consolidated Trial Practice Guide (Nov. 2019) at 80. But "in most cases, the Board is capable of identifying new issues or belatedly presented evidence when weighing the evidence at the close of trial, and disregarding any new issues or belatedly presented evidence." *Id.* Therefore, "striking the entirety or a portion of a party's brief is an exceptional remedy that the Board expects will be granted rarely." *Id.*

That is the case here. First, we are able to determine whether Patent Owner's Sur-reply impermissibly presents new arguments, raises new issues, or relies on belatedly submitted evidence, the exceptional remedy of striking the Sur-reply is not warranted. Second, our Decision does not rely on any of the allegedly impermissible arguments or evidence Petitioner identified in its Motion to Strike. To the extent Petitioner may have been harmed by our considering Patent Owner's argument set forth in the Sur-reply that the claims require the thrust-bearing element to be rotatably

mounted "entirely" in the movable portion, Petitioner was given, and took advantage of, an opportunity to respond to that argument in post-hearing briefing. Accordingly, Petitioner's motion to strike is denied.

IV. PETITIONER'S MOTION TO EXCLUDE

Petitioner moves to exclude Patent Owner's Exhibits 2020–2023. Paper 26 ("Mot. Excl"). According to Petitioner, Patent Owner submitted these exhibits with its Patent Owner Sur-reply in violation of 37 C.F.R. § 42.23(b). *Id.* at 1. As our analysis does not rely on any of the exhibits that Petitioner seeks to exclude, we dismiss Petitioner's motion to exclude as moot.

V. CONCLUSION

For the foregoing reasons, we determine that Petitioner has not established by a preponderance of the evidence that claims 1–5, 7–14, and 16 of the '121 patent are unpatentable.

Claim(s)	**35 U.S.C. §**	**Reference(s)/Basis**	**Claim(s) Shown Unpatentable**	**Claim(s) Not shown Unpatentable**
1–3, 7–12, 16	102(b)	VenHuizen		1–3, 7–12, 16
1–5, 10–14	102(b)	Fiorido		1–5, 10–14
1–5, 7–14, 16	103(a)	Fiorido, VenHuizen, AAPA		1–5, 7–14, 16
1–3, 7–12, 16	103(a)	Amazone, Fiorido, VenHuizen, AAPA		1–3, 7–12, 16
Overall Outcome				1–5, 7–14, 16

VI. ORDER

For the reasons given, it is

ORDERED that Petitioner has not proven by a preponderance of the evidence that any of claims 1–5, 7–14, and 16 of the '121 patent are unpatentable;

FURTHER ORDERED that Petitioner's Motion to Strike is *denied*;

FURTHER ORDERED that Petitioner's Motion to Exclude is *dismissed*; and

FURTHER ORDERED that, because this is a Final Written Decision, parties to the proceeding seeking judicial review of the decision must comply with the notice and service requirement of 37 C.F.R. § 90.2.

PETITIONER:

Scott R. Brown
Matthew B. Walters
HOVEY WILLIAMS LLP
sbrown@hoveywilliams.com
mwalters@hoveywilliams.com

FOR PATENT OWNER:

David Fitzgibbon
Elizabeth O'Donoghue
Ashley Shapiro
Kevin Casey
STRADLEY RONON STEVENS & YOUNG LLP
dfitzgibbon@stradley.com
eodonoghue@stradley.com
ashapiro@stradley.com
kcasey@stradley.com