3GPP TS 23.140 V6.9.0 (2005-03)

Technical Specification

3rd Generation Partnership Project;
Technical Specification Group Terminals;
Multimedia Messaging Service (MMS);
Functional description;
Stage 2
(Release 6)

GLOBAL SYSTEM FOR
MOBILE COMMUNICATIONS

The present document has been developed within the 3rd Generation Partnership Project (3GPP TM) and may be further elaborated for the purposes of 3GPP.

The present document has not been subject to any approval process by the 3GPP Organisational Partners and shall not be implemented.
This Specification is provided for future development work within 3GPP only. The Organisational Partners accept no liability for any use of this Specification.
Specifications and reports for implementation of the 3GPP TM system should be obtained via the 3GPP Organisational Partners' Publications Offices.

SAMSUNG 1004

Keywords

UMTS, terminal, multimedia, stage 2

3GPP

Postal address

3GPP support office address

650 Route des Lucioles - Sophia Antipolis
Valbonne - FRANCE
Tel.: +33 4 92 94 42 00 Fax: +33 4 93 65 47 16

Internet

http://www.3gpp.org

Copyright Notification

No part may be reproduced except as authorized by written permission.
The copyright and the foregoing restriction extend to reproduction in all media.

© 2005, 3GPP Organizational Partners (ARIB, ATIS, CCSA, ETSI, TTA, TTC).
All rights reserved.

Contents

Foreword 9
1 Scope 10
2 References 10
3 Definitions and Abbreviations 14
3.1 Definitions 14
3.2 Abbreviations 15
4 General Architecture 16
4.1 Overview 16
4.2 Involved MMS Elements 17
4.3 Addressing 18
4.4 Message Size Measurement 18
4.4.1 Size of Subject information element 18
4.4.2 Size of an MM element 19
5 Functional Description of Involved MMS Elements 19
5.1 MMS User Agent 19
5.1.1 MMS User Agent operations 19
5.1.1.1 MMS Retrieval Modes 19
5.1.2 Minimum set of supported formats 20
5.1.2.1 Interoperability with SMS 20
5.1.2.2 Plain Text 20
5.1.2.3 Speech 20
5.1.2.4 Audio 20
5.1.2.5 Synthetic audio 20
5.1.2.6 Still Image 20
5.1.2.7 Bitmap graphics 20
5.1.2.8 Video 20
5.1.2.9 Vector graphics 20
5.1.2.10 File Format for dynamic media 20
5.1.2.11 Media synchronization and presentation format 21
5.1.2.12 DRM format 21
5.2 MMS Relay/Server 21
5.2.1 Persistent Network-based Storage (MMBoxes) 22
5.3 External Servers 22
5.4 Messaging Service Control Function (MSCF) 22
5.5 MMS User Databases and HLR 22
5.6 MMS VAS Applications 23
6 MMSE Architecture and Interfaces 23
6.1 MMS Reference Architecture 23
6.2 Protocol Framework 24
6.3 MM1: MMS Relay/Server – MMS User Agent 24
6.4 MM2: MMS Relay – MMS Server 25
6.5 MM3: MMS Relay/Server – External Servers 25
6.6 MM4: Interworking of different MMSEs 25
6.7 MM5: MMS Relay/Server – HLR 25
6.8 MM6: MMS Relay/Server – MMS User Databases 25
6.9 MM7: MMS Relay/Server – MMS VAS Applications 25
6.10 MM8: MMS Relay/Server – Post-processing system 26
6.11 MM9: MMS Relay/Server – Online charging system 26
6.12 MM10: MMS Relay/Server – Messaging Service Control Function (MSCF) 26
7.1 MMS services offered 26
7.1.1 Submission of a Multimedia Message in the originator MMSE 26
7.1.2 Reception of a Multimedia Message in the recipient MMSE 28
7.1.2.1 Multimedia Message Notification 28

7.1.3 Retrieval of a Multimedia Message in the recipient MMSE ... 29
7.1.3.1 Terminal Capability Negotiation ... 30
7.1.4 Forwarding of a Multimedia Message ... 31
7.1.5 Delivery Report ... 32
7.1.6 Read-Reply Report ... 34
7.1.7 Support for Streaming in MMS ... 35
7.1.8 Support for Prepaid Service in MMS ... 36
7.1.9 Address Hiding in MMS ... 36
7.1.10 Support for Reply-Charging in MMS ... 37
7.1.11 MM4 forward routing failure ... 39
7.1.12 Support for Persistent Network-based Storage ... 39
7.1.12.1 MM State and MM Flags ... 39
7.1.12.2 Requests to Store MMs within an MMBox ... 40
7.1.12.3 Requests to Retrieve MMBox Content ... 40
7.1.12.4 MM Deletions ... 40
7.1.12.5 MMBox Service Constraints ... 40
7.1.13 Support for Value Added Services (VAS) in MMS ... 41
7.1.13.1 Authentication ... 41
7.1.13.2 Authorisation ... 41
7.1.13.3 Confidentiality ... 41
7.1.13.4 Charging Information ... 41
7.1.13.5 Message Distribution Indicator ... 42
7.1.13.6 Identification of applications that reside on MMS VAS Applications ... 42
7.1.14 Handling of MMS-related information on the (U)SIM ... 42
7.1.14.1 Handling of MMS-related transfer to the USIM ... 43
7.1.15 Support for Digital Rights Management in MMS ... 43
7.1.15.1 DRM-protected content within an MM ... 43
7.1.15.2 DRM-related User Agent beaviour ... 44
7.1.15.3 DRM-related Relay/Server behaviour ... 44
7.1.15.3.1 Support for Forward Lock and Combined Delivery ... 44
7.1.15.3.2 Support for Separate Delivery ... 44
7.1.16 Support of Hyperlinks in MMS ... 44
7.1.17 Support of Messaging Service Control Function ... 45
7.1.17.1 Triggering of interactions with the MSCF ... 45
7.1.17.2 User Profile Trigger criteria ... 45
7.1.17.3 Address based Trigger criteria ... 46
7.1.17.4 Charging impact ... 46
7.1.17.5 Message handling ... 46
7.1.17.5.1 MM1 Submission ... 47
7.1.17.5.1.1 User Profile based trigger ... 47
7.1.17.5.1.1.1 Interrogation Request ... 47
7.1.17.5.1.1.2 Interrogation Response ... 47
7.1.17.5.1.2 Address specific trigger ... 48
7.1.17.5.1.2.1 Interrogation Request ... 48
7.1.17.5.1.2.2 Interrogation Response ... 49
7.1.17.5.2 MM1 Delivery ... 50
7.1.17.5.2.1 Interrogation Request ... 50
7.1.17.5.2.2 Interrogation Response ... 50
7.1.17.5.3 MM7 Submission ... 51
7.1.17.5.3.1 VASP Profile based trigger ... 51
7.1.17.5.3.1.1 Interrogation Request ... 51
7.1.17.5.3.1.2 Interrogation Response ... 51
7.1.17.5.3.2 Address specific trigger ... 52
7.1.17.5.3.2.1 Interrogation Request ... 52
7.1.17.5.3.2.2 Interrogation Response ... 53
7.1.17.6 Access control ... 54
7.1.17.7 Interrogation Request Timeout ... 54
7.1.17.8 Trigger Information Data in MM10 Interrogation Requests ... 54
7.1.17.9 MSCF Addressing and Routeing ... 54
7.1.18 Support for transporting Application Data ... 54
7.1.18.1 Application Identifiers ... 55
7.1.18.2 Applications sending and receiving abstract messages ... 55

7.1.18.2.1 Sending abstract messages ... 55
7.1.18.2.2 Receiving abstract messages ... 55
7.1.18.2.3 End User Confirmation ... 56
7.1.19 Cancelling of a Multimedia Message ... 56
7.1.20 Deletion of Multimedia Messages on an MMS Relay/Server ... 56
7.2 MMSE Addressing responsibilities ... 57
7.2.1 Address Formats on MM1 ... 57
7.2.2 Address Formats on MM4 ... 58
7.2.3 Address Formats on MM7 ... 58

8 MMS Application Protocol Framework and Technical Realisation of MMS Service Features ... 59
8.1 Technical realisation of MMS on reference point MM1 ... 62
8.1.1 Authentication Mechanisms for MM1 ... 62
8.1.2 Detection of Duplicate MMs ... 62
8.1.3 Submission of Multimedia Message ... 62
8.1.3.1 Normal operation ... 62
8.1.3.2 Abnormal Operation ... 62
8.1.3.3 Features ... 63
8.1.3.4 Information Elements ... 65
8.1.4 Multimedia Message Notification ... 66
8.1.4.1 Normal Operation ... 66
8.1.4.2 Abnormal Operation ... 66
8.1.4.3 Features ... 66
8.1.4.4 Information Elements ... 68
8.1.5 Retrieval of Multimedia Message ... 69
8.1.5.1 Normal Operation ... 69
8.1.5.2 Abnormal Operation ... 69
8.1.5.3 Features ... 69
8.1.5.4 Information Elements ... 71
8.1.6 Forwarding of Multimedia Message ... 73
8.1.6.1 Normal operation ... 73
8.1.6.2 Abnormal Operation ... 73
8.1.6.3 Features ... 74
8.1.6.4 Information Elements ... 75
8.1.7 Delivery Report ... 76
8.1.7.1 Normal Operation ... 76
8.1.7.2 Abnormal Operation ... 76
8.1.7.3 Features ... 76
8.1.7.4 Information Elements ... 77
8.1.8 Read-Reply Report ... 77
8.1.8.1 Normal Operation ... 77
8.1.8.2 Abnormal Operation ... 77
8.1.8.3 Features ... 77
8.1.8.4 Information Elements ... 78
8.1.9 Storing and Updating Multimedia Messages in an MMBox ... 79
8.1.9.1 Normal operation ... 79
8.1.9.2 Abnormal Operation ... 79
8.1.9.3 Features ... 80
8.1.9.4 Information Elements ... 80
8.1.10 View the MMBox ... 81
8.1.10.1 Normal Operations ... 81
8.1.10.2 Abnormal Operations ... 81
8.1.10.3 Features ... 81
8.1.10.4 Information Elements ... 83
8.1.11 Uploading and Persistently Storing Multimedia Messages ... 84
8.1.11.1 Normal operation ... 84
8.1.11.2 Abnormal Operation ... 84
8.1.11.3 Features ... 84
8.1.11.4 Information Elements ... 85
8.1.12 Deletion of Stored Multimedia Messages ... 86
8.1.12.1 Normal Operations ... 86
8.1.12.2 Abnormal Operations ... 86

8.1.12.3 Features ... 86
8.1.12.4 Information Elements ... 87
8.1.13 Cancelling a Multimedia Message ... 87
8.1.13.1 Normal operation ... 87
8.1.13.2 Abnormal Operation ... 88
8.1.13.3 Features ... 88
8.1.13.4 Information Elements ... 88
8.1.14 Deletion of Multimedia Messages on an MMS Relay/Server ... 88
8.1.14.1 Normal operation ... 89
8.1.14.2 Abnormal Operation ... 89
8.1.14.3 Features ... 89
8.1.14.4 Information Elements ... 89
8.2 Technical realisation of MMS on reference point MM2 ... 90
8.3 Technical realisation of MMS on reference point MM3 ... 90
8.3.1 Sending of MMs ... 90
8.3.2 Receiving of messages ... 90
8.3.3 Discovery of new messages on External Servers ... 90
8.4 Technical realisation of MMS on reference point MM4 ... 91
8.4.1 Routing Forward of a Multimedia Message ... 91
8.4.1.1 Normal operation ... 91
8.4.1.2 Abnormal Operation ... 91
8.4.1.3 Features ... 91
8.4.1.4 Information Elements ... 94
8.4.2 Routing Forward of a Delivery Report ... 95
8.4.2.1 Normal Operation ... 95
8.4.2.2 Abnormal Operation ... 95
8.4.2.3 Features ... 95
8.4.2.4 Information Elements ... 97
8.4.3 Routing Forward of a Read-Reply Report ... 97
8.4.3.1 Normal Operation ... 98
8.4.3.2 Abnormal Operation ... 98
8.4.3.3 Features ... 98
8.4.3.4 Information Elements ... 99
8.4.4 Message format on MM4 ... 99
8.4.4.1 Message header fields ... 99
8.4.4.2 MM4_Forward.REQ Header Mappings ... 100
8.4.4.3 MM4_Forward.RES Header Mappings ... 101
8.4.4.4 MM4_Delivery_report.REQ Header Mappings ... 101
8.4.4.5 MM4_Delivery_report.RES Header Mappings ... 102
8.4.4.6 MM4_Read_reply_report.REQ Header Mappings ... 103
8.4.4.7 MM4_Read_reply_report.RES Header Mappings ... 103
8.4.4.8 Header Field Value Range ... 104
8.4.4.9 Message Encoding on MM4 ... 106
8.4.4.10 Request Status Codes Clarification ... 106
8.4.4.11 MM-Status-Extension ... 107
8.4.5 Message Transfer Protocol on MM4 ... 107
8.4.5.1 Addressing ... 107
8.4.5.2 Message Transfer ... 110
8.4.5.3 Other Definitions ... 110
8.4.5.2 SMTP Service Extensions ... 110
8.4.6 Version Handling on MM4 ... 110
8.5 Technical realisation of MMS on reference point MM5 ... 111
8.6 Technical realisation of MMS on reference point MM6 ... 111
8.7 Technical realisation of MMS on reference point MM7 ... 111
8.7.1 Submitting a VAS MM ... 112
8.7.1.1 Normal Operation ... 112
8.7.1.2 Abnormal Operation ... 112
8.7.1.3 Features ... 112
8.7.1.4 Information Elements ... 115
8.7.2 Delivery Request ... 116
8.7.2.1 Normal Operation ... 116
8.7.2.2 Abnormal Operation ... 117

8.7.2.3 Features ... 117
8.7.2.4 Information Elements ... 119
8.7.3 Cancel and replace of MM ... 120
8.7.3.1 Normal Operation ... 120
8.7.3.2 Abnormal Operation ... 121
8.7.3.3 Features ... 121
8.7.3.4 Information Elements ... 122
8.7.4 Delivery reporting to VASP ... 123
8.7.4.1 Normal Operation ... 124
8.7.4.2 Abnormal Operation ... 124
8.7.4.3 Features ... 124
8.7.4.4 Information Elements ... 125
8.7.5 Read-Reply Report for VASP ... 125
8.7.5.1 Normal Operation ... 126
8.7.5.2 Abnormal Operation ... 126
8.7.5.3 Features ... 126
8.7.5.4 Information Elements ... 127
8.7.5A Extended Cancel and Extended Replace of MM ... 127
8.7.5A.1 Normal Operation ... 128
8.7.5A.2 Abnormal Operation ... 129
8.7.5A.3 Features ... 129
8.7.5A.4 Information Elements ... 130
8.7.6 Generic Error Handling ... 131
8.7.6.1 Normal Operation ... 131
8.7.6.2 Features ... 131
8.7.6.3 Information Elements ... 132
8.7.7 Administrating the Distribution List ... 132
8.7.8 Implementation of the MM7 Abstract Messages ... 132
8.7.8.1 SOAP Message Format and Encoding Principles ... 132
8.7.8.1.1 Binding to HTTP ... 133
8.7.8.1.2 SOAPAction Header Field ... 134
8.7.8.1.3 DRM-related media types in SOAP messages ... 134
8.7.8.2 MM7 Addressing Considerations ... 134
8.7.8.3 Status Reporting ... 134
8.7.8.3.1 Request and Error Status Codes ... 135
8.7.8.4 Delivery Conditions ... 137
8.7.9 Mapping of Information Elements to SOAP Elements ... 137
8.7.9.1 MM7_submit.REQ mapping ... 138
8.7.9.2 MM7_submit.RES mapping ... 139
8.7.9.3 MM7_deliver.REQ Mapping ... 142
8.7.9.4 MM7_deliver.RES ... 143
8.7.9.5 MM7_cancel.REQ mapping ... 144
8.7.9.6 MM7_cancel.RES mapping ... 144
8.7.9.7 MM7_replace.REQ mapping ... 146
8.7.9.8 MM7_replace.RES mapping ... 146
8.7.9.9 MM7_delivery_report.REQ mapping ... 147
8.7.9.10 MM7_delivery_report.RES mapping ... 147
8.7.9.11 MM7_read_reply.REQ mapping ... 148
8.7.9.12 MM7_read_reply.RES mapping ... 148
8.7.9.13 MM7_RS_error.RES mapping ... 148
8.7.9.14 MM7_VASP_error.RES mapping ... 149
8.7.9.15 MM7_extended_cancel.REQ mapping ... 149
8.7.9.16 MM7_extended_cancel.RES mapping ... 149
8.7.9.17 MM7_extended_replace.REQ mapping ... 151
8.7.9.18 MM7_extended_replace.RES mapping ... 151
8.8 Technical realisation of MMS on reference point MM8 ... 151
8.9 Technical realisation of MMS on reference point MM9 ... 151
8.10 Technical realisation of MMS on reference point MM10 ... 152
8.10.1 Interrogation of the Messaging Service Control Function (MSCF) ... 153
8.10.2 Normal Operation ... 153
8.10.3 Abnormal Operation ... 153
8.10.4 Features ... 153

8.10.5 Information Elements 154

Annex A (informative): Examples of MMS architectural implementations 155

A.1 Introduction 155

A.2 Example of combined MMS-Relay/Server 155

A.3 Example of non-combined MMS-Relay and MMS-Server 156

A.4 Example of MMS interaction with T.30 Facsimile Services 156

A.5 Example of MMS interaction with 2G/3G Voice Mailboxes 157

A.6 Example of interaction with Internet E-Mail Messaging 158

A.7 Example of interaction with Short Message Service, SMS 159

A.8 Example of Integration with Unified Messaging System (UMS) 160

Annex B (informative): MMS Stage 3 Implementation 162

Annex C (informative): Charging Data Records 163

Annex D (informative): MM3 principles 165

D.1 Sending of MMs 165

D.2 Receiving of messages 165

Annex D1 (informative): Mapping of IE to MM3 protocols 166

D1.1 Transforming MM 166

D1.2 Delivery Reports 170

Annex E (informative): Use cases for Reply-Charging 173

Annex F (normative): Configuration of MMS-capable UEs 174

F.1 MMS Connectivity Information 174

F.2 User Preferences 175

Annex G (normative): DNS-ENUM recipient MSISDN address resolution. 176

Annex H (normative): Recipient MSISDN address resolution based on IMSI 178

Annex I (normative): MM1 <-> MM4 header mapping 180

Annex J (informative): Support for Streaming in MMS 187

Annex K (informative): MM1, MM4 <-> MM7 header mapping 189

Annex L (normative): MM7 XML Schema 197

Annex L1 (informative): Schema Version Handling 206

Annex M (informative): Recipient MMS Relay/Server Delivery Report generation and presentation to the originator MMS User Agent. 208

Annex N (normative): Information Element mapping for the support of MSCF 209

Annex O (informative): Change history 215

Foreword

This Technical Specification (TS) has been produced by the 3rd Generation Partnership Project (3GPP).

The contents of the present document are subject to continuing work within the TSG and may change following formal TSG approval. Should the TSG modify the contents of the present document, it will be re-released by the TSG with an identifying change of release date and an increase in version number as follows:

Version x.y.z

where:

x the first digit:

1 presented to TSG for information;

2 presented to TSG for approval;

3 or greater indicates TSG approved document under change control.

y the second digit is incremented for all changes of substance, i.e. technical enhancements, corrections, updates, etc.

z the third digit is incremented when editorial only changes have been incorporated in the document.

1 Scope

The present document defines the stage 2 and stage 3 description of the non-realtime Multimedia Messaging Service, MMS. Stage 2 identifies the functional capabilities and information flows needed to support the service described in stage 1.

The present document includes information applicable to network operators, service providers and terminal, switch and database manufacturers.

The present document contains the core functions for a non realtime Multimedia Messaging Service, MMS, which are sufficient to provide a basic service.

MMS uses a number of technologies to realise the requirements of the stage 1 description (3G TS 22.140) [1]. The present document describes how the service requirements are realised with the selected technologies. As far as possible existing protocols (e.g. WAP, SMTP, ESMTP as transfer protocols; lower layers to provide push, pull, notification) and existing message formats (e.g. SMIL, MIME) shall be used for the realisation of the Multimedia Messaging Service.

The present document serves as a foundation for the development of MMS. It describes a new service which has no direct equivalent in the previous ETSI/GSM world or in the fixed network world. In consequence readers may find that certain aspects are not clearly defined or open to misinterpretation. Where any such case is encountered it is essential that the issue is brought to the 3GPP TSG T2 standards body (see page 2 for contact information) for discussion and resolution in order to provide interoperable implementations.

2 References

The following documents contain provisions which, through reference in this text, constitute provisions of the present document.

- References are either specific (identified by date of publication, edition number, version number, etc.) or non-specific.
- For a specific reference, subsequent revisions do not apply.
- For a non-specific reference, the latest version applies. In the case of a reference to a 3GPP document (including a GSM document), a non-specific reference implicitly refers to the latest version of that document *in the same Release as the present document*.

[1] 3GPP TS 22.140: "Multimedia Messaging Service; Stage 1".

[2] 3GPP TR 21.905: "Vocabulary for 3GPP Specifications".

[3] void

[4] void

[5] IETF; STD 0011 (RFC 2822): "Internet Message Format", URL: http://www.ietf.org/rfc/rfc2822.txt.

[6] IETF; RFC 2046: "Multipurpose Internet Mail extension (MIME) Part Two: Media Types", URL: http://www.ietf.org/rfc/rfc2046.txt.

[7] void.

[8] void

[9] void

[10] void

[11] 3GPP TS 24.011: "Point-to-Point (PP) Short Message Service (SMS) support on mobile radio interface".

[12] void

[13] void

[14] void

[15] void

[16] void

[17] void

[18] void

[19] void

[20] void

[21] void

[22] IETF; STD 0010 (RFC 2821): "Simple Mail Transfer Protocol", URL: http://www.ietf.org/rfc/rfc2821.txt.

[23] WAP Forum (November 1999): "WAP Wireless Session Protocol", WAP-WSP-19991105- , URL: http://www.wapforum.org/.

[24] void

[25] void

[26] void

[27] void

[28] void

[29] void

[30] void

[31] ITU-T Recommendation T.37 (06/98): "Procedures for the transfer of facsimile data via store-and-forward on the Internet".

[32] ITU-T Recommendation T.30 (1996): "Procedures for document facsimile transmission in the general switched telephone network".

[33] IETF; RFC 2421 (Sept. 1998): "Voice Profile for Internet Mail – version 2, VPIM" , URL: http://www.ietf.org/rfc/rfc2421.txt.

[34] IETF; STD 0053 (RFC 1939): "POP 3, Post Office Protocol - Version 3" , URL: http://www.ietf.org/rfc/rfc1939.txt.

[35] IETF; RFC 1730 (December 1994): "IMAP4, Internet Message Access Protocol - Version 4" , URL: http://www.ietf.org/rfc/rfc1730.txt..

[36] Adobe Systems: "Tag Image File Format (TIFF), Version 6", URL:, http://www.adobe.com.

[37] 3GPP TR 23.039: "Interface protocols for the connection of Short Message Service Centres (SMSCs) to Short Message Entities (SMEs)".

[38] void

[39] void

[40] 3GPP TS 26.233: "End-to-end transparent streaming Service (PSS); General Description".

[41] 3GPP TS 26.234: "End-to-end transparent streaming Service (PSS); Protocols and Codecs".

[42] void

[43] void

[44] IETF; RFC 2045: "Multipurpose Internet Mail Extensions (MIME) Part One: Format of Internet Message Bodies", URL: http://www.ietf.org/rfc/rfc2045.txt

[45] void

[46] void

[47] void

[48] IETF; RFC 2616: “Hypertext Transfer Protocol, HTTP/1.1”, URL: http://www.ietf.org/rfc/rfc2616.txt.

[49] void

[50] void

[51] void

[52] void

[53] IETF; RFC 1327: "Mapping between X.400(1988)/ISO 10021 and RFC 822", URL: http://www.ietf.org/rfc/rfc1327.txt.

[54] 3GPP TS 29.061: "Interworking between the Public Land Mobile Network (PLMN) supporting Packet Based Services and Packet Data Networks (PDN)"

[55] Open Mobile Alliance; OMA-WAP-ProvCont-v1_1-20021112-C, Provisioning Content Version 1.1, URL: http://www.openmobilealliance.org/

[56] Open Mobile Alliance; OMA-MMS-ENC-v1_2, Multimedia Messaging Service, Encapsulation Protocol, Version 1.2, URL: http://www.openmobilealliance.org

NOTE: Reference [56] is the REL-5 MM1 stage 3 specification. OMA is committed to develop a REL-6 version. Consequently, reference [56] is to be replaced by the appropriate document identifier once the REL-6 MM1 stage 3 specification is approved within OMA.

[57] IETF; RFC 1870: “SMTP Service Extension for Message Size Declaration”, URL: http://www.ietf.org/rfc/rfc1870.txt

[58] IETF; RFC 1652: “SMTP Service Extension for 8bit-MIME transport”, URL: http://www.ietf.org/rfc/rfc1652.txt

[59] void

[60] IETF, RFC 2915: “The Naming Authority Pointer (NAPTR) DNS Resource Record”, URL: http://www.ietf.org/rfc/rfc2915.txt

[61] IETF, RFC 2916: “E.164 number and DNS”, URL: http://www.ietf.org/rfc/rfc2916.txt

[62] 3GPP TS 29.002: "Mobile Application Part (MAP) specification".

[63] 3GPP TS 22.066: "Support of Mobile Number Portability (MNP); Service description. Stage 1".

[64] 3GPP TS 23.066: "Support of Mobile Number Portability (MNP); Technical realization. Stage 2".

[65] IETF; RFC 2617 "Access Authentication", URL:http://www.ietf.org/rfc/rfc2617.txt

[66] IETF; RFC 2246 "TLS protocol, version 1.0" , URL:http://www.ietf.org/rfc/rfc2246.txt

[67] 3GPP TS 31.102 "Characteristics of the USIM Application".

[68] W3C Note 08 May 2000 "Simple Object Access Protocol (SOAP) 1.1", URL: http://www.w3.org/TR/SOAP

[69] W3C Note 11 December 2000 "SOAP Messages with Attachments", URL: http://www.w3.org/TR/SOAP-attachments

[70] IETF; RFC 2376: "XML Media Type", URL: http://www.ietf.org/rfc/rfc2376.txt.

[71] IETF; RFC 2387: "The MIME Multipart/Related Content Type", URL: http://www.ietf.org/rfc/rfc2387.txt.

[72] IETF; RFC 2111: "Content-ID and Message-ID Uniform Resource Locators", URL: http://www.ietf.org/rfc/rfc2111.txt.

[73] void

[74] 3GPP TS 26.140: "Multimedia Messaging Service; Media formats and codecs".

[75] 3GPP TS 51.011 (Rel-4): "Specification of the Subscriber Identity Module – Mobile Equipment (SIM-ME) interface".

[76] “Digital Rights Management”, Open Mobile AllianceTM, OMA-Download-DRM-v1_0, http://www.openmobilealliance.org/

[77] “DRM Rights Expression Language”, Open Mobile AllianceTM, OMA-Download-DRMREL-v1_0, http://www.openmobilealliance.org/

[78] “DRM Content Format”, Open Mobile AllianceTM, OMA-Download-DRMCF-v1_0, http://www.openmobilealliance.org/

[79] ITU-T Recommendation E.212: "The international identification plan for mobile terminals and mobile users".

[80] 3GPP TS 32.240: "Charging Management; Charging Architecture and Principles ".

[81] 3GPP TS 32.270: "Charging Management; Multimedia Messaging Service (MMS) charging".

[82] Open Mobile Alliance; OMA-ERELD-MMS-v1_2-20030923-C, Enabler Release Definition for MMS Version 1.2, URL: http://www.openmobilealliance.org/

NOTE: Reference [82] is the REL-5 MM1 stage 3 specification. OMA is committed to develop a REL-6 version. Consequently, reference [82] is to be replaced by the appropriate document identifier once the REL-6 MM1 stage 3 specification is approved within OMA.

[83] 3GPP TS 23.078: "Customised Applications for Mobile network Enhanced Logic (CAMEL) Phase 4 - Stage 2"

[84] IETF RFC 3588 "Diameter Base Protocol", URL: http://www.ietf.org/rfc/rfc3588.txt.

[85] Open Mobile Alliance; OMA-MMS-CONF-v1_2-20040219-C, MMS Conformance Document 1.2, URL: http://www.openmobilealliance.org/

NOTE: Reference [85] is the REL-5 MM1 stage 3 specification. OMA is committed to develop a REL-6 version. Consequently, reference [85] is to be replaced by the appropriate document identifier once the REL-6 MM1 stage 3 specification is approved within OMA.

[86] 3GPP TS 29.140: "MM10 interface based on Diameter protocol (Stage 3)".

[87] 3GPP TS 31.111: "USIM Application Toolkit (USAT) ".

3 Definitions and Abbreviations

3.1 Definitions

For the purposes of the present document, the terms and definitions defined in 3GPP TR 21.905 [2] and 3GPP TS 22.140 [1] and the following apply:

Abstract message: information which is transferred between two MMS entities used to convey an MM and/or associated control information between these two entities

NOTE 1: The application protocol framework and technical realisation of MMS service features is described in terms of abstract messages in the present document.

Application Data: Information / data specific to an application other than the MMS User Agent / VASP which is intended to be transported without alteration by using MMS. Application Data may be of any content type and format.

Delivery Report: feedback information provided to an originator of MM (MMS User Agent or VASP) by an MMS Relay/Server about the status of the delivery of an MM

External Server: network entity/application of an external system such as Internet email, unified messaging system or facsimile to which MMs may be sent to and/or from which MMs may be received by an MMS User Agent via an MMS service provider

NOTE 2: An External Server is connected to that MMS Service Provider via non-MMS-specific protocols.

Forwarding MMS User Agent: MMS User Agent that is the intended recipient of an MM, that requests forwarding of the MM for delivery to other recipient(s) without having to first download the MM

Forwarded MM: MM originally sent from a sender to an intended recipient which is then forwarded to other recipient(s) and to which a delivery report and/or read-reply report may refer and which may be subject to further forwarding

Message ID: a unique identifier for an MM

Message Reference: a unique identifier for an MM indicating the location of the MM

MMBox: network storage associated with a user into which MMs, along with MM State and MM Flags, may be stored, retrieved, and deleted

MM State: the state of an MM within the MMBox, as one of several, mutually-exclusive enumerated values

MM Flags: a list of zero, one, or more keyword flags, defined by the MMS User Agent, associated with the MM

MM Delivery: act of a recipient MMS Relay/Server delivering an MM to a recipient MMS User Agent

MM Submission: act of an originator MMS User Agent submitting an MM to the originator MMS Relay/Server

MMSNA: Multimedia Messaging Service Network Architecture encompasses all the various elements that provide a complete MMS to a user

MMSE: collection of MMS-specific network elements under the control of a single administration

MMS Relay/Server: MMS-specific network entity/application that is under the control of an MMS service provider

NOTE 3: An MMS Relay/Server transfers messages, provides operations of the MMS that are specific to or required by the mobile environment and provides (temporary and/or persistent) storage services to the MMS.

MMS User Agent: application residing on a UE, an MS or an external device that performs MMS-specific operations on a user's behalf and/or on another application’s behalf.

NOTE 4: An MMS User Agent is not considered part of an MMSE.

MMS VAS Applications: Applications providing Value Added Services (e.g. news service or weather forecasts) to MMS users.

Original MM: (initial) MM sent from a sender to a recipient and to which a delivery report and/or a read-reply report and/or a reply-MM may refer and/or which may be subject to being forwarded

Originator MMSE: MMSE associated with the sender of an MM

Originator MMS Relay/Server: MMS Relay/Server associated with the sender of an MM

Originator MMS User Agent: MMS User Agent associated with the sender of an MM

Originator VASP: VASP which is sending an MM

Read-Reply Report: feedback information to an originator MMS User Agent by a recipient MMS User Agent about the status of handling/rendering of an original MM in a recipient MMS User Agent

Recipient MMSE: MMSE associated with the recipient of an MM

Recipient MMS Relay/Server: MMS Relay/Server associated with the recipient of an MM

Recipient MMS User Agent: MMS User Agent associated with the recipient of an MM

Recipient VASP: VASP which is receiving an MM

Reply-MM: the first reply accepted by the recipient MMS Relay/Server (after checking the reply charging limitations, such as the latest time of submission) in case of reply-charging

Service provider identification: an identification for a service provider, e.g. a domain name, MCC+MNC, or a subset of the IMSI identifying the service provider. It is possible for the MMS Relay/Server to host several service providers. Mechanisms for this are implementation- and operator-specific.

Short code: Service provider specific address which is a string of alphanumeric characters

SOAP Attachment: Multimedia content, e.g. audio, image, text, presentation or a combination of different media types and/or formats, transferred from an MMS VASP to an MMS Relay/Server or vice versa.

Time stamp: The date, time and the additional information, e.g. UTC, GMT or time zone, which allows the unambiguous identification of time.

Transaction: message pair sent between an MMS User Agent and MMS Relay/Server, or between MMS Relay/Servers

3.2 Abbreviations

For the purposes of the present document, the abbreviations defined in [1] and [2] and the following apply:

CDR	Charging Data Record
DCF	DRM Content Format
DNS	Domain Name System
DRM	Digital Rights Management
EMA	Electronic Message Association
E-Mail	Electronic Mail
ENUM	Electronic Numbering
FQDN	Fully Qualified Domain Name
GW	Gateway
HTTP	Hypertext Transfer Protocol
IANA	Internet Assigned Numbering Authority
IETF	Internet Engineering Task Force
IMAP4	Internet Message Access Protocol
MIME	Multipurpose Internet Mail Extensions
MM	Multimedia Message
MMS	Multimedia Messaging Service
MMSE	Multimedia Messaging Service Environment
MMSNA	Multimedia Messaging Service Network Architecture
MSCF	Messaging Service Control Function
MTA	Mail Transfer Agent
PDU	Protocol Data Unit
POP3	Post Office Protocol Version 3
RADIUS	Remote Authentication Dial In User Service
RFC	Request for Comments
RTSP	Real Time Streaming Protocol
SDP	Session Description Protocol
SMIL	Synchronised Multimedia Integration Language
SMTP	Simple Mail Transfer Protocol
SOAP	Simple Object Access Protocol

SPI	Service Provider Identification
TLD	Top Level Domain
UA	User Agent
URI	Uniform Resource Identifiers
VAS	Value Added Service
VASP	Value Added Service Provider
VPIM	Voice Profile for Internet Mail
W3C	WWW Consortium
WAP	Wireless Application Protocol
WSP	WAP Session Protocol
XML	Extensible Markup Language

4 General Architecture

4.1 Overview

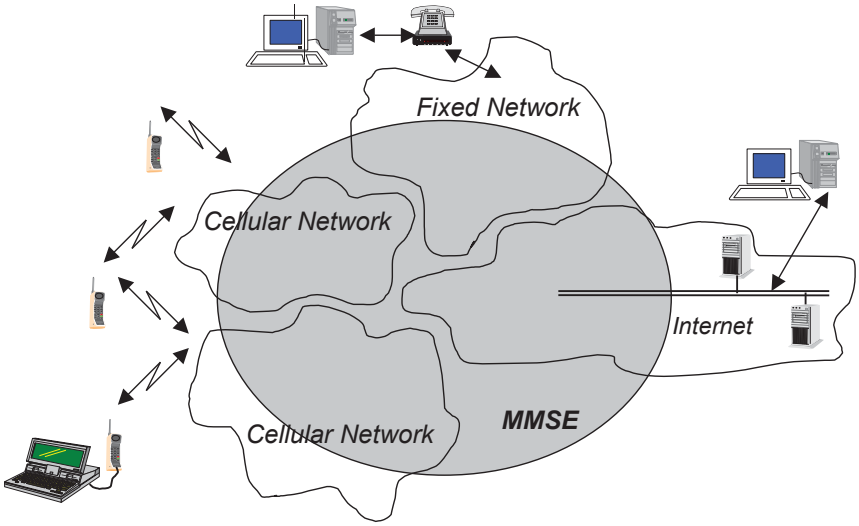

Figure 1: General view of MMS provision within the different networks

Figure 1 shows a generalised view of the Multimedia Messaging Service architecture. It shall combine different networks and network types and shall integrate messaging systems already existent within these networks. The terminal operates with the Multimedia Messaging Service Environment, MMSE. This environment may comprise 2G and 3G networks, 3G networks with islands of coverage within a 2G network and roamed networks. The MMSE provides all the necessary service elements, e.g. delivery, storage and notification functionality. These service elements may be located within one network or distributed across several networks or network types.

4.2 Involved MMS Elements

Figure 2 shows that multimedia messaging may encompass many different network types. The basis of connectivity between these different networks shall be provided by the Internet protocol and its associated set of messaging protocols. This approach enables messaging in 2G and 3G wireless networks to be compatible with messaging systems found on the Internet.

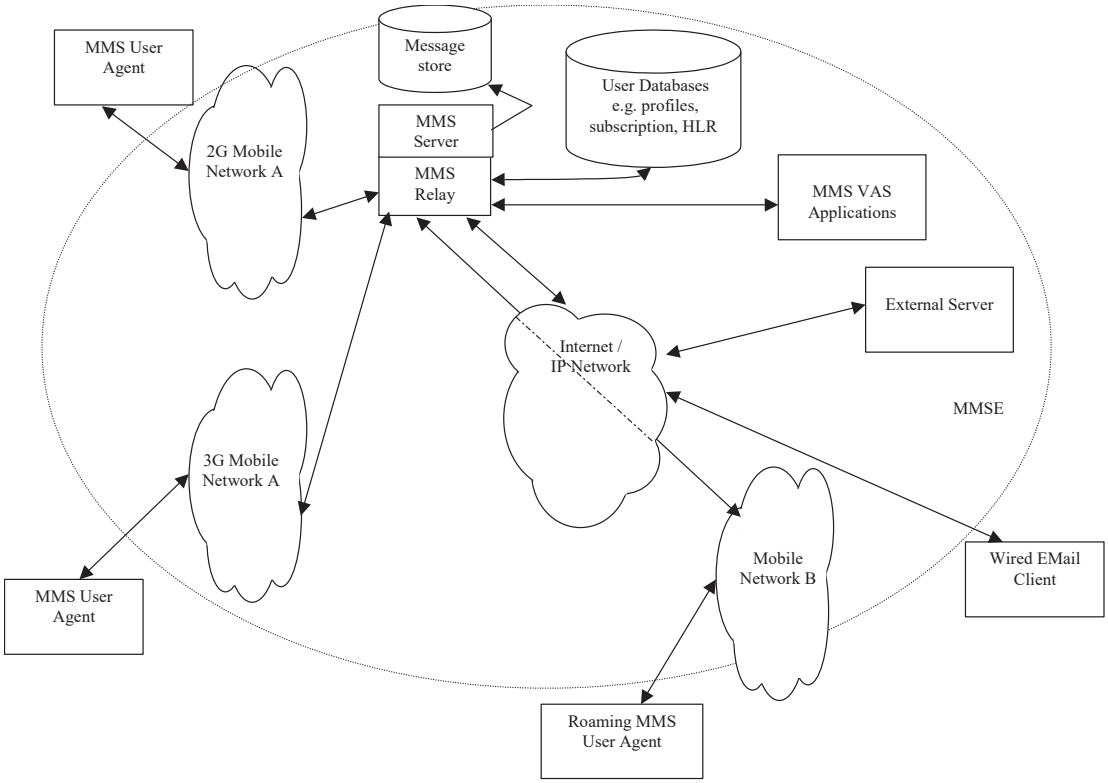

Figure 2: MMS Architectural Elements

MMSNA

The Multimedia Messaging Service Network Architecture encompasses all the various elements that provide a complete MMS to a user (including interworking between service providers).

MMSE

The MMSE is a collection of MMS-specific network elements under the control of a single administration. In the case of roaming the visited network is considered a part of that user's MMSE. However, subscribers to another service provider are considered to be a part of a separate MMSE.

MMS Relay/Server

The MMS Relay/Server is responsible for storage and handling of incoming and outgoing messages and for the transfer of messages between different messaging systems. Depending on the business model, the MMS Relay/Server may be a single logical element or may be separated into MMS Relay and MMS Server elements. These may be distributed across different domains.

The MMS Relay/Server should be able to generate charging data (Charging Data Record - CDR) when receiving MMs from or when delivering MMs to another element of the MMSNA according to 3GPP TS 32.270 [81]. The MMS Relay/Server should be able to generate charging data for VASP-related operations.

MMS User Databases

This element may be comprised of one or more entities that contain user related information such as subscription and configuration (e.g. user profile, HLR).

MMS User Agent

The MMS User Agent resides on a UE, an MS or on an external device connected to a UE/MS. It is an application layer function that provides the users with the ability to view, compose and handle MMs (e.g. submitting, receiving, deleting of MMs).

MMS VAS Applications

The MMS VAS Applications offer Value Added Services to MMS users. There could be several MMS VAS Applications included in or connected to an MMSE. MMS VAS Applications may be able to generate CDRs.

4.3 Addressing

MMS shall support the use of E-Mail addresses (RFC 2822) [5] or MSISDN (E.164) or both to address the recipient of an MM. MMS may support the use of service provider specific addresses to address the recipient of an MM. In the case of E-Mail addresses standard internet message routing should be used. MMS may support short codes to address Value Added Services.

NOTE: The length of short codes shall be defined by the service provider and will not be specified for this release.

The usage of MSISDN for addressing a recipient in a different MMS service provider's domain shall be possible. For that the need of MSISDN translation to a routable address has been identified. Service provider specific addresses may be used to e.g. deliver messages to MMS VAS Application within one MMSE.

MMS connectivity across different networks (MMSEs) is provided based on Internet protocols. According to this approach, each MMSE should be assigned a unique domain name (e.g. mms.operatora.net).

MMS recipient addresses provided by an MMS User Agent may be in a format of an RFC 2822 routable address, e.g. E-Mail address, or other formats, such as E.164 or service provider specific addresses. In those cases where a non-routable address is used to specify a recipient and the recipient belongs to another MMSE or the recipient is outside of any MMSE, it is required to translate the address to an RFC 2822 routable address format. The sender MMS Relay/Server's shall make this mapping before routing forward the message to the recipient's MMS Relay/Server.

The mapping to the correct recipient's MMS Relay/Server domain name is described in clause 7.2.1.

MMS shall support address hiding i.e. anonymous messages where the sender's address is not shown to the recipient MMS User Agent. If the peer entity is not known to be an MMS Relay/Server the originator MMS Relay/Server shall not provide the originator address. If the peer entity is known to be an MMS Relay/Server, both the originator address and request of address hiding shall be forwarded to the recipient MMS Relay/Server. The recipient MMS Relay/Server shall not show the originator address to the recipient MMS User Agent.

4.4 Message Size Measurement

The Message size is defined as the sum of the Subject information element size and the size of all the MM element(s), including the Presentation object (e.g. SMIL). Other information elements of a MM shall be excluded from the message size calculation.

4.4.1 Size of Subject information element

The size of the Subject information element (prior to truncation – if any) shall be calculated as the length of the subject field in octets excluding the “Subject: ” token.

4.4.2 Size of an MM element

The size of an MM element shall be calculated as the total number of octets of the media object, i.e. raw data without any boundaries or additional headers which are due to MIME-based encodings of the MM.

In case of an MM element being a multipart/mixed or multipart/related MIME message, the total number of octets contained in the body of that MIME message (i.e. that MM element) shall be counted including only the boundaries and additional headers which are part of the MIME message (i.e. that MM element).

NOTE 1: It is understood that due to the different encoding used in the MM4 reference point for the Subject field, there can be a slight discrepancy in the message size calculated over the MM1 and MM4 reference points.

NOTE 2: The message size of a submitted MM might differ from the message size of a retrieved MM if content adaptation is performed prior to its retrieval.

5 Functional Description of Involved MMS Elements

5.1 MMS User Agent

5.1.1 MMS User Agent operations

The MMS User Agent shall provide the following application layer functionalities:-

- the retrieval of MMs (initiate MM delivery to the MMS User Agent);
- terminal capability negotiation.

The MMS User Agent may provide additional application layer functionalities such as:-

- the MM composition ;
- the presentation of the MM Size (as defined in clause 4.4) prior to MM submission;
- the MM submission;
- the MM presentation;
- the presentation of notifications to the user;
- the signing of an MM on an end-user to end-user basis;
- the decryption and encryption of an MM on an end-user to end-user basis;
- all aspects of storing MMs on the terminal;
- handling of MMS-related information on the (U)SIM;
- management and presentation of MMBox content;
- the handling of external devices;
- the user profile management;
- transport of application data;
- replacing a previously retrieved MM with a newly retrieved MM;
- cancelling a previously retrieved MM.

This optional list of additional functionalities of the MMS User Agent is not exhaustive.

5.1.1.1 MMS Retrieval Modes

MMS allows for the retrieval of MMs in a manual or automatic fashion. The retrieval mode is a terminal behavior and is based on different factors. These factors may include roaming conditions, message size, MMS User Agent configuration, recommendation from the MMS Relay/Server for retrieval, the originator of an MM, and transport of application data.

In automatic mode the retrieval of an MM and its storage to local memory is accomplished without any interaction with the end user. Depending on terminal implementation, the MM may be displayed to the end user with or without any pre-notice. In this mode the end user is probably not aware of the MM notification and whether it's stored on the device or not.

In manual mode the end user is made aware of the MM notification and is allowed to make a decision whether to download the MM or not. In this mode the end user is aware of an MM notification and where it's stored on the terminal.

5.1.2 Minimum set of supported formats

In order to guarantee a minimum support and compatibility between multimedia messaging capable terminals, the following media and file formats shall be supported as defined below and in 3GPP TS 26.140 [74].

5.1.2.1 Interoperability with SMS

In order to guarantee SMS interoperability, SMS 3GPP TS 24.011 [11] RP-DATA RPDU encapsulation defined in clause 7.3.1 shall be supported. MIME type "application/vnd.3gpp.sms" shall be used for this purpose. In order to maintain backward compatibility, MIME type "application/x-sms" shall be supported by the MMS UA for mobile-terminated messages only.

5.1.2.2 Plain Text

Plain Text coding used inside MMS shall be according to [74].

5.1.2.3 Speech

Speech coding used inside MMS shall be according to [74].

5.1.2.4 Audio

Audio coding used inside MMS shall be according to [74].

5.1.2.5 Synthetic audio

Synthetic audio coding used inside MMS shall be according to [74].

5.1.2.6 Still Image

Still image coding used inside MMS shall be according to [74].

5.1.2.7 Bitmap graphics

Bitmap graphics coding used inside MMS shall be according to [74].

5.1.2.8 Video

Video coding used inside MMS shall be according to [74].

5.1.2.9 Vector graphics

Vector graphics coding used inside MMS shall be according to [74].

5.1.2.10 File Format for dynamic media

Support for file formats for dynamic media used inside MMS shall be according to [74].

5.1.2.11 Media synchronization and presentation format

Support for media synchronization and presentation format used inside MMS shall be according to [74].

5.1.2.12 DRM format

Support for DRM protected MM elements (i.e. 'DRM Message' and 'DRM Content Format (DCF)') shall be according to section 7.1.15.

5.2 MMS Relay/Server

The MMS Relay/Server is responsible for storage and notification, reports, and general handling of messages. The MMS Relay/Server may also provide convergence functionality between External Servers and MMS User Agents and thus enable the integration of different server types across different networks. An Example can be found in Annex A.

It is possible to separate the MMS Relay/Server element into MMS Relay and MMS Server elements, but an allocation of the MMS Relay/Server functionalities to such elements is not defined in this release.

The MMS Relay/Server shall provide the following functionalities:

- receiving and sending MM;
- conversion of messages arriving at the recipient MMS Relay/Server from legacy messaging systems to MM format (e.g. facsimile to MM) if interworking with legacy messaging systems (MM3) is supported;
- conversion of MMs leaving the originator MMS Relay/Server to legacy messaging systems to the appropriate message format (e.g. MM to internet email) if interworking with legacy messaging systems (MM3) is supported;
- message content retrieval;
- MM notification to the MMS User Agent;
- generating delivery reports;
- routing forward MMs and read-reply reports;
- address translation;
- temporary storage of messages;
- ensuring that messages are not lost until successfully delivered to another MMSE element;
- DRM functionalities according to section 7.1.15.

The MMS Relay/Server should provide additional functionalities such as:

- generating charging data records (CDR);
- negotiation of terminal capabilities;
- transport of application data.

The MMS Relay/Server may provide additional functionalities such as:

- MM forwarding;
- address hiding;
- persistent storage of messages;
- controlling the reply-charging feature of MMS;.
- relaying Message Distribution Indicator.

The MMS Relay/Server can provide additional functionalities which are not further specified in this release such as:-

- enabling/disabling MMS function;
- personalising MMS based on user profile information;

- MM deletion based on user profile or filtering information;
- truncating the subject in a notification, e.g., in order to optimize for underlying bearer limitations;
- media type conversion;
- media format conversion;
- screening of MM;
- checking terminal availability;
- managing the message properties on servers (e.g. voicemail or email server) integrated in the MMSE (consistency) (only applicable if interworking with legacy messaging systems (MM3) is supported);
- detecting whether the recipient user is roaming or not;
- detecting whether the recipient handset is MMS capable or not.

This list of additional optional functionalities of the MMS Relay/Server is not exhaustive.

5.2.1 Persistent Network-based Storage (MMBoxes)

An optional feature of MMS is the support of persistent, network-based storage, called an “MMBox”, a logical entity associated with the MMS Relay/Server into which Multimedia Messages (MMs) may be stored, retrieved, and deleted. Depending upon an operator’s configuration, each subscriber may have her MMBox configured to automatically store incoming and submitted MMs, or, through supporting MMS User Agents, request that specific MMs be persistently stored on a case-by-case basis.

5.3 External Servers

Several External Servers may be included within or connected to an MMSE, e.g. E-Mail Server, SMS Server (SMSC), Fax. Convergence functionality between External Servers and MMS User Agents is provided by the MMS Relay/Server which enables the integration of different server types across different networks. Several Examples can be found in Annex A.

5.4 Messaging Service Control Function (MSCF)

The MSCF is a functional entity which may be connected to the MMS Relay/Server to execute messaging related service logic. It may influence addressing, routeing and charging for multimedia messages. Furthermore it may control access rights of the user.

The MSCF may be co-located with the gsmSCF [83].

5.5 MMS User Databases and HLR

The MMS may have access to several User databases. These may consist of e.g. user profile database, subscription database, HLR.

These User Databases shall provide:-

MMS user subscription information;

information for the control of access to the MMS;

information for the control of the extent of available service capability (e.g. server storage space);

a set of rules how to handle incoming messages and their delivery;

information of the current capabilities of the users terminal.

The location of the User Databases and the access to them are outside the scope of this release.

5.6 MMS VAS Applications

The MMS VAS Applications provide value added services to the MMS users. In many ways MMS VAS Applications behave like a fixed MMS User Agent. However, MMS VAS Applications may provide some additional features like MM recall between MMS VAS Applications and MMS Relay/Server which are not available for MMS User Agents.

The present document does not cover what kind of applications might be available and how the MMS VAS Application provide these services.

MMS VAS Applications may be able to generate CDRs when receiving MMs from MMS Relay/Server and when submitting MMs to MMS Relay/Server. The interaction between an MMS Relay/Server and the MMS VAS Application should be provided through the MM7 interface, as described in clause 6.9.

6 MMSE Architecture and Interfaces

This clause defines the Multimedia Messaging framework. The application protocol framework described by the means of abstract messages and the technical realisation of MMS service features are defined in clause 8.

6.1 MMS Reference Architecture

Figure 3 shows the MMS Reference Architecture and identifies reference points within an MMSNA that are further described below. Abstract messages are indicated in clause 8 that describe the logical message exchange on these reference points on a high-level basis.

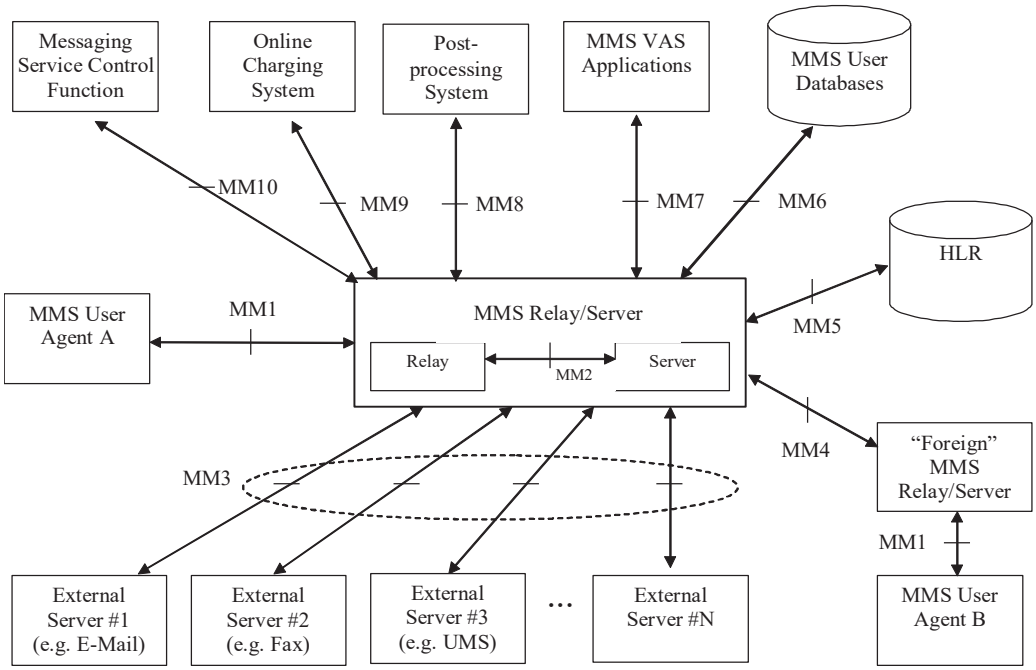

Figure 3: MMS Reference Architecture

The interfaces in the MMS Reference Architecture are:

MM1: The reference point between the MMS User Agent and the MMS Relay/Server.

MM2: The reference point between the MMS Relay and the MMS Server.

MM3: The reference point between the MMS Relay/Server and external (legacy) messaging systems.

MM4: The reference point between the MMS Relay/Server and another MMS Relay/Server that is within another MMSE.

MM5: The reference point between the MMS Relay/Server and the Home Location Register (HLR).

MM6: The reference point between the MMS Relay/Server and the MMS User Databases.

MM7: The reference point between the MMS Relay/Server and MMS VAS Applications.

MM8: The reference point between the MMS Relay/Server and the post-processing system.

MM9: The reference point between the MMS Relay/Server and the online charging system.

MM10: The reference point between the MMS Relay/Server and a Messaging Service Control Function (MSCF).

6.2 Protocol Framework

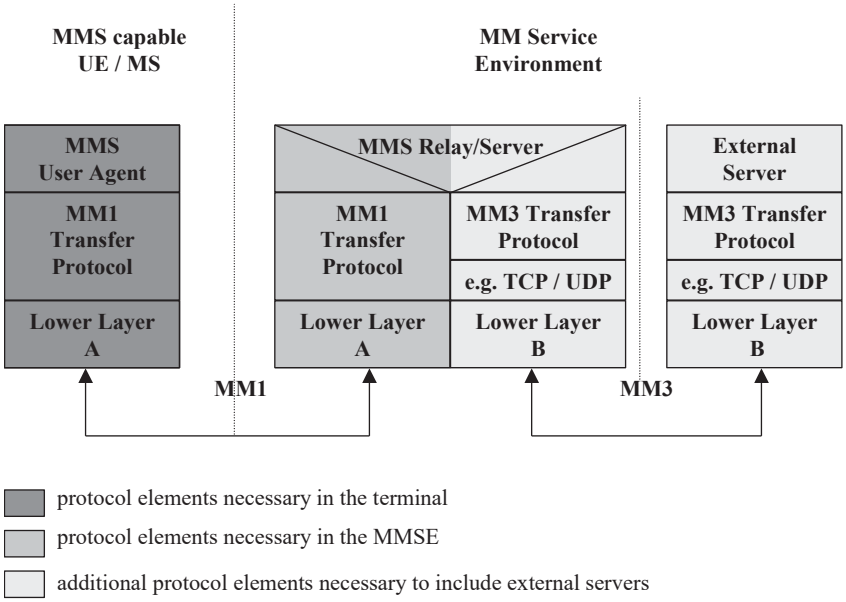

Figure 4: Protocol Framework to provide MMS

To provide implementation flexibility, integration of existing and new services together with interoperability across different networks and terminals, the MMS shall make use of the protocol framework outlined in figure 4. In this framework the MMS User Agent communicates with the MMS Relay/Server, which may communicate with External Servers. This MMS Relay/Server may provide convergence functionality between External Servers and MMS User Agents and thus enables the integration of different server types across different networks.

6.3 MM1: MMS Relay/Server – MMS User Agent

Reference point MM1 is used to submit Multimedia Messages from MMS User Agent to MMS Relay/Server, to let the MMS User Agent pull MMs from the MMS Relay/Server, let the MMS Relay/Server push information about MMs to the MMS User Agent as part of an MM notification, and to exchange delivery reports between MMS Relay/Server and MMS User Agents.

Details for implementation of the MM1 transfer protocol are described in Annex B. Other implementations are not defined in the present document in this release.

6.4 MM2: MMS Relay – MMS Server

This reference point is not specified in this release of the present document. It may be specified in a future release of the present document.

6.5 MM3: MMS Relay/Server – External Servers

Reference point MM3 is used by the MMS Relay/Server to send Multimedia Messages to and retrieve MMs from servers of external (legacy) messaging systems that are connected to the service provider's MMS Relay/Server.

This reference point is further elaborated in clause 8.3. In addition, several examples of realisations of reference point MM3 between the MMS Relay/Servers and External Servers can be found in Annex A.

6.6 MM4: Interworking of different MMSEs

Reference point MM4 between MMS Relay/Servers belonging to different MMSEs is used to transfer messages between them. Interworking between MMS Relay/Servers shall be based on SMTP according to STD 10 (RFC 2821) [22] as depicted in figure 5.

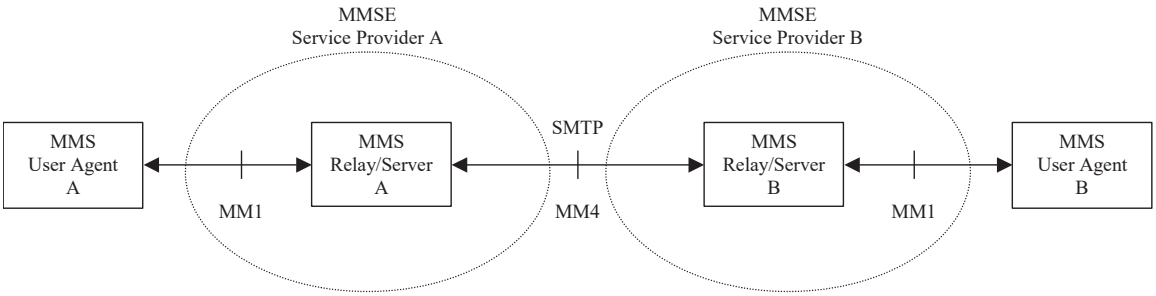

Figure 5: Interworking of different MMSEs

Interworking between different MMS service providers is further elaborated in clause 8.4.

6.7 MM5: MMS Relay/Server – HLR

Reference point MM5 may be used to provide information to the MMS Relay/Server about the subscriber. If this reference point is provisioned then it shall use existing MAP operations (e.g. procedures for determining the location of the mobile, procedures for alerting SMS service centres). Future releases may elaborate this area further.

In case of using SMS as the bearer for notification this reference point is not necessary.

6.8 MM6: MMS Relay/Server – MMS User Databases

This reference point is outside the scope of this release of the present document.

6.9 MM7: MMS Relay/Server – MMS VAS Applications

Reference point MM7 is used to transfer MMs from MMS Relay/Server to MMS VAS applications and to transfer MMs from MMS VAS applications to MMS Relay/Server. This functionality is further elaborated in section 7.1.13. This reference point shall be based on SOAP 1.1 [68] and SOAP messages with attachments [69] using an HTTP

transport layer. Future releases may update this protocol decision to use a standardized version of SOAP and support additional transport layer implementations.

6.10 MM8: MMS Relay/Server – Post-processing system

Reference point MM8 is used to transfer MMS specific CDRs from MMS Relay/Server to the operators post-processing system, refer TS 32.240 [80]. The functionality is further elaborated in TS 32.270 [81].

6.11 MM9: MMS Relay/Server – Online charging system

Reference point MM9 is used to transfer charging messages from MMS Relay/Server to the online charging system, refer TS 32.240 [80]. This functionality is further elaborated in TS 32.270 [81].

6.12 MM10: MMS Relay/Server – Messaging Service Control Function (MSCF)

Reference Point MM10 is used to transfer multimedia message specific information between the MMS Relay/Server and an external MSCF, e.g. for number translation purposes.

This reference point shall be based on Diameter [84].

7 MMS Service Behaviour Description

7.1 MMS services offered

7.1.1 Submission of a Multimedia Message in the originator MMSE

When a user intends to send an MM to one or several destinations the MM shall be submitted to the originator MMS Relay/Server.

The support for submission of MMs is optional for MMS User Agents. The support for submission of MMs is mandatory for MMS Relay/Servers.

If an MMS User Agent supports submission of MMs the MMS User Agent shall be able to:

- Indicate the address of the MM recipient;
- Identify the MIME content type of the message.

If a MMS User Agent supports submission of MMs the MMS User Agent may be able to:

- Request a delivery report for the message;
- Request a read-reply report for the message;
- Provide a time stamp for the time of submission of the message;
- Set the earliest desired time of delivery for the message;
- Set the desired time of expiry for the message;
- Indicate the address of the MM originator;
- Set further message qualifications (e.g. priority, message class, subject);

- Request the MM originator's address being hidden from the recipient MMS User Agent;
- Indicate the sender's willingness to pay the charge for one reply-MM per recipient;
- Indicate a reply-charging limitation;
- Request that a copy of the submitted MM be stored in the originator's MMBox, in addition to being delivered to the recipient;
- Provide guideline for content adaptation (e.g. if content adaptation for the MM is restricted);
- Provide content information (e.g. content class [85] , presence of DRM content).

Upon reception of an MM from an originator MMS User Agent the originator MMS Relay/Server

- shall assign a Message Identification to the MM and immediately provide the originator MMS User Agent with this Message Identification;
- shall retain the MM until the earliest desired time of delivery, if the optional feature of earliest time of delivery is supported by the originator MMS Relay/Server. If this feature is not supported then the MM is immediately routed forward;
- shall provide the peer entity with a time stamp if not provided by the originator MMS User Agent. The originator MMS Relay/Server may also override the MMS User Agent's time stamp;
- shall insert the originator's address into the MM if not provided by the originator MMS User Agent;
- shall pass the originator's address to the peer entity if the peer entity is known to be a MMS Relay/Server;
- shall route forward the request for address hiding unaltered to the recipient MMS Relay/Server if the peer entity is known to be an MMS Relay/Server;
- shall pass the originator's address to the peer entity if the peer entity is not known to be an MMS Relay/Server and address hiding has not been requested by the originator MMS User Agent;
- shall not pass the originator's address to the peer entity and should override the address provided by the originator MMS User Agent in the MM to an "anonymous" address if the peer entity is not known to be an MMS Relay/Server and address hiding has been requested by the originator MMS User Agent;
- may override the originator's address provided by the originator MMS User Agent in the MM (subject to MMS service provider's preferences);
- shall resolve the MM recipient's address(es);
- if an MMBox is supported and enabled for the originator, shall store a copy of the MM into the originator's MMBox automatically, according to the service configuration for the originator or as requested by the MMS User Agent;
- shall route the MM towards the MM recipients;
- should pass the indication whether or not a delivery report is requested unaltered when routing the MM towards the MM recipient(s);
- shall pass the indication whether or not a read-reply report is requested unaltered when routing the MM towards the MM recipient(s);
- shall pass the indication about MIME content type of the message and message qualifications (e.g. priority, message class, subject) unaltered when routing the MM towards the MM recipient(s);
- shall generate a delivery report indicating "indeterminate" status of the MM's delivery if a delivery report was requested by the originator MMS User Agent and if the peer entity the MM is routed forward to is not known by the originator MMS Relay/Server;

- may reject the MM submission if the MM is identified as a duplicate of an MM already stored;
- shall route forward, if available, the guideline for content adaptation to the peer entity if the peer entity is known to be a MMS Relay/Server.
- shall route forward, if available, the content information to the peer entity if the peer entity is known to be a MMS Relay/Server.

.

A special case is where the recipient MMS Relay/Server is also the originator MMS Relay/Server. In this case the MM does not have to be routed forward.

7.1.2 Reception of a Multimedia Message in the recipient MMSE

Upon reception of an MM the recipient MMS Relay/Server

- may verify the MM recipient's user profile(s);
- shall store the MM at least until
  - the associated time of expiry is reached,
  - the MM is delivered,
  - the recipient MMS User Agent requests the MM to be routed forward or
  - the MM is rejected;
- may store the MM into an MMBox.

The term "associated time of expiry " refers to either the desired time of expiry set by the originator MMS User Agent or an MMS Relay/Server time of expiry setting.

- shall generate a notification to the recipient MMS User Agent.

Incoming messages from legacy systems may be expected to be converted to MMs.

7.1.2.1 Multimedia Message Notification

With the MM notification the recipient MMS User Agent shall receive a message reference that can be used for retrieving the MM from the recipient MMS Relay/Server. The message reference that is conveyed in a notification shall at least be valid throughout the message expiry period, till the successful retrieval of the MM or until the MM was rejected.

With the MM notification the recipient MMS User Agent may receive additional information on the MM.

If the originator MMS User Agent has requested address hiding the recipient MMS Relay/Server shall not include the originator address into the MM notification.

The MMS Relay/Server may include an indication in the MM notification recommending manual retrieval mode. This recommendation may be based on user settings in the User Profile.

The MMS Relay/Server may truncate the subject field in the notification, e.g., in order to adapt the size of the MM notification to limitations from the underlying bearer.

In a response to the notification the MMS User Agent shall be able to

- reject the MM or
- retrieve the MM, either immediately or at a later time (i.e. defer the MM retrieval), either manually or automatically, as possibly determined by the operator configuration and user profile.

The retrieval mode employed by the recipient MMS User Agent for a particular MM may be based either on the user settings in the terminal or on the recommendation carried in the MM notification. The recipient MMS User Agent may follow this recommendation to retrieve the MM, through manual retrieval.

For any MM for which the retrieval has been deferred, the MMS User Agent may request deletion on the MMS Relay/Server instead of MM retrieval.

7.1.3 Retrieval of a Multimedia Message in the recipient MMSE

The recipient MMS User Agent shall be able to request retrieval of an MM from the recipient MMS Relay/Server based on the Message Reference received in a notification. If MMBoxes are supported, the MMS User Agent shall be able to request retrieval of an MM from the user's MMBox, based on a Message Reference received from a previous MMBox operation.

Within a retrieval request the recipient MMS User Agent may indicate a size restriction of the returned MM (i.e., maximum size) that the MMS Relay/Server is to use in processing the retrieval request.

Upon retrieval request the recipient MMS Relay/Server

- shall deliver the MM to the recipient MMS User Agent
- may perform data adaptation based on user profile and/or, MMS User Agent capabilities and/or, guideline and/or content information provided by the originator
- shall not provide the MM originator address to the MM recipient if the originator MMS User Agent requested its address to be hidden from the MM recipient
- shall provide the MM originator address to the MM recipient if the originator MMS User Agent did not request its address to be hidden from the MM recipient and if the MM originator address is available at the recipient MMS Relay/Server
- may provide an alias or clarifying text (e.g. "anonymous address" or "unknown address") in the originator address field instead of providing the originator address to the recipient MMS User Agent, if the originator has requested address hiding or the original message does not contain the originator address
- shall give an indication to the recipient MMS User Agent that a delivery report is requested if such a delivery report has been requested by the originator MMS User Agent
- shall give an indication to the recipient MMS User Agent that a read-reply report is requested if such a read reply report has been requested by the originator MMS User Agent
- shall indicate the MIME content type of the MM to the recipient MMS User Agent
- shall provide other available message qualifications unaltered to the recipient MMS User Agent
- shall provide the time stamp of the MM unaltered to the recipient MMS User Agent
- shall store messages in the network until the recipient MMS User Agent becomes reachable (e.g. user moves back into coverage, switches MMS User Agent on) or until the MM expires
- should provide the recipient MMS User Agent with a list of addresses of forwarding MMS User Agents for the MM if the MM was forwarded and the address information is available to the recipient MMS Relay/Server
- should not deliver the MM (or any adaptation of the MM) to the recipient MMS User Agent unless the size restriction set by the MMS User Agent is met
- may provide, if available, the content information to the recipient MMS User Agent
- may forward an indication, coming from a VASP, to the recipient MMS User Agent that the MM replaces the content of a specific previous MM.

Upon retrieving a new MM, coming from a VASP, that replaces a previously retrieved MM, the recipient MMS User Agent should try to replace the previously retrieved MM with the new MM, as indicated in the newly retrieved MM. MMS User Agent may provide means (e.g. terminal setting) to a user to forbid such replacement.

Content information provided by the originator of an MM may be used by the recipient MMS Relay/S erver for various purposes. For instance, if the content class [85] is supported by the recipient and the content does not contain any DRM-protected content, the MMS Relay/Server may identify that adaptation is not required without need for further analysis of the message. Content information may also be used by the recipient MMS User Agent for quick and easy handling of the content of a MM (e.g. invoking DRM-related activities like encoding and decoding, storing content, preparing MM for presentation).

While the recipient MMS Relay/Server is adapting data, the adaptation rule based on DRM-protected content shall prevail the adaptation guideline provided by the originator.

The recipient MMS Relay/Server shall be able to ignore a request from an originator that the content of the MM will not be subjected to content adaptation, e.g. based on MMS service provider / network operator configuration.

In a response to an MM's delivery the recipient MMS User Agent may be able to

- request a delivery report not to be generated by the MMS Relay/Server.

7.1.3.1 Terminal Capability Negotiation

An MMS User Agent shall support Terminal Capability Negotiation. An MMS Relay/Server shall support Terminal Capability Negotiation.

Within a request for delivery of an MM the recipient MMS User Agent shall be able to indicate its capabilities towards the recipient MMS Relay/Server.

The recipient MMS User Agent may indicate its capabilities towards the recipient MMS Relay/Server by transmitting:

- a set of information describing the terminal's capabilities, including a binary flag indicating whether or not the terminal supports Application data
- a link (e.g. URI) to a database where the MMS Relay/Server can fetch a set of information describing the terminal's capabilities, and/or
- a differential set of information indicating changes to a previously indicated set of terminal capability information.

The detailed definition of the specific mechanism for terminal capability negotiation shall be defined by the MM1 implementation (cf. Annex B). The mechanism for terminal capability negotiation shall ensure that the MMS Relay/Server is provided with the information describing the MMS User Agent's capabilities within every request for delivery of an MM.

E.g. in the WAP/OMA implementation of MMS, in case an underlying WSP session is established between the MMS User Agent and an intermediate WAP Gateway, the MMS User Agent indicates its capabilities towards the WAP Gateway only after the initial set-up of the underlying WSP session or spontaneously following a change in terminal capabilities. The WAP Gateway, however, caches the terminal capability information and passes these on to the MMS Relay/Server within every request for delivery of an MM. Intermediate proxies on the MM1 reference point may also be involved in terminal capability negotiation and/or content adaptation.

Upon reception of such a delivery request the recipient MMS Relay/Server should use the information about the capabilities of the recipient MMS User Agent in preparation of MMs to be delivered to the recipient MMS User Agent. The MMS Relay/Server should adjust an MM to be delivered that contains media types and media formats that are not supported by the recipient MMS User Agent. This adjustment might involve the deletion or adaptation of those unsupported media types and media formats.

The MMS User Agent's capability information should include

- the maximum supported size of an MM,
- the maximum supported resolution of an image,
- a list of supported media types and media formats (e.g. MIME types),
- a list of supported character sets,
- a list of preferred languages,

- the maximum supported colour depth,
- an indication whether or not the recipient MMS User Agent supports streaming for the retrieval of MM contents as specified in clause 7.1.7 ,
- an indication if the recipient MMS User Agent supports transporting application data.

The MMS User Agent's capability information shall include:

- an indication of which Digital Rights Management methods are supported by the recipient MMS User Agent for protecting MM elements as specified in clause 7.1.15.

This information may include additional information related to the MMS implementation (cf. Annex B).

7.1.4 Forwarding of a Multimedia Message

This part of the MMS service describes the mechanism by which an MMS User Agent may request the corresponding MMS Relay/Server, that an MM for which the MMS User Agent is the intended recipient (and is notified of the MM) be forwarded to other specified recipient(s) MMS User Agent(s) whose address(es) shall be specified by the forwarding MMS User Agent, without having to first retrieve the MM.

The support for originating a request that a specific MM be forwarded is optional for the MMS User Agent.

The support for forwarding an MM, in response to a request from a MMS User Agent that a specific MM be forwarded is optional for the MMS Relay/Server.

The original MM is forwarded to a new recipient(s) with the forwarding MMS User Agent's address being provided but without additional content, and without affecting the elements of the original MM. Some additional information elements e.g. ,reply-charging request,delivery report, read-reply report, i.e. requests for reports which are to provide feedback on the forwarded MM to the forwarding MMS User Agent, may be supplied.

Upon requesting an MM to be forwarded the MMS User Agent:

- shall indicate the address of the MM recipient(s);
- shall provide the message reference provided in the MM Notification;
- shall not request address hiding;
- shall not generate a read-reply report to the originator MMS User Agent even if a read-reply report is requested;
- may indicate the address of the Forwarding MMS User Agent (i.e. it's own address);
- may request that a copy of the forwarded MM be stored in the MMBox;
- may provide a time stamp for the time of submission of the request to forward the MM;
- may set the desired time of expiry for the forwarded MM;
- may set the earliest desired time of delivery for the forwarded MM;
- may request a delivery report for the forwarded MM;
- may request a read-reply report for the forwarded MM;
- may indicate the willingness of the forwarding MMS user agent to pay for a reply for the forwarded MM and convey the reply-charging limitations. In this case, forwarding MMS User Agent behaves as the originator MMS User Agent to support reply-charging function. Fowarding MMS User Agent shall not be allowed to forward the reply-charging information set by the originator MMS User Agent.

Upon reception of a request from a forwarding MMS User Agent to forward an MM, the forwarding MMS Relay/Server

- shall assign a Message Identification to the forwarded MM and immediately provide the forwarding MMS User Agent with this Message Identification;

- shall provide status information on the MM forward request to the forwarding MMS User Agent;
- shall retain the forwarded MM until the earliest desired time of delivery, if the optional feature of earliest time of delivery is supported by the MMS Relay/Server of the forwarding MMS User Agent. If this feature is not supported then the MM is immediately routed forward;
- is responsible for copying the MM into the MMBox, if the MMBox is supported, enabled, and if requested. In addition, the stored MM will have new Recipient address, Sender address, and Date and time information elements appended to the stored MM in such a way that the forwarding history of those information elements is accumulated with repeated forwardings, without losing the Recipient and Sender addresses, and Date and time of the original MM;
- may provide a time stamp of the MM submission;
- shall not provide the MM originator's address if the originator MMS User Agent requested its address to be hidden from the MM recipient(s);
- shall not route forward the request for address hiding of the MM originator;
- shall provide the address of the MMS User Agent that requested forwarding of the MM;
- shall provide a time stamp for the request to forward the MM. It may also override the forwarding MMS User Agent's time stamp;
- shall insert the forwarding MMS User Agent's address into the forwarded MM if not yet provided;
- may override the forwarder's address provided by the forwarding MMS User Agent in the forwarding request (subject to MMS service provider's preferences);
- shall resolve the recipient's address(es) of the forwarded MM;
- shall route the forwarded MM towards the MM recipient(s);
- shall pass the indication whether or not a delivery report is requested unaltered when routing the forwarded MM towards the MM recipient(s);
- shall pass the indication whether or not a read-reply report is requested unaltered when routing the forwarded MM towards the MM recipient(s);
- shall generate a delivery report indicating "indeterminate" status of the MM's delivery if a delivery report was requested by the last MMS User Agent that handled the message and if the peer entity the MM is routed forward to is not known to the MMS Relay/Server of the forwarding MMS User Agent;
- shall provide the recipient MMS Relay/Server(s) with a count of the number of times that the particular MM was forwarded;
- shall provide the recipient MMS Relay/Server(s) with a list of addresses of forwarding MMS User Agents for the MM;
- shall generate a delivery report to the originator MMS User Agent if a delivery report is requested.

A special case is where the recipient MMS Relay/Server is also the forwarding MMS Relay/Server. In this case the MM does not have to be routed forward.

7.1.5 Delivery Report

The MMS Relay/Server shall support the delivery reporting service. Delivery reports shall only be generated for MMs.

The originator MMS User Agent or VASP may be able to request a delivery report for a specific MM.

Within an MM notification or upon MM retrieval the recipient MMS User Agent may receive an indication that a delivery report is requested for the MM.

Within either a response to a notification or a response to an MM's delivery, the recipient MMS User Agent may request a delivery report not to be generated by the MMS Relay/Server. When a VASP has requested the delivery report (via MM7) the MMS Relay/Server shall send the delivery report regardless of the MMS User Agent's request.

The originator MMS Relay/Server shall generate a delivery report if a delivery report has been requested by the originator MMS User Agent or VASP

- upon routing forward the MM, in case the peer entity is not known by the MMS Relay/Server;
- upon routing forward the MM, in case that originator is VASP.

The originator MMS Relay/Server may generate a delivery report if a delivery report has been requested by the originator MMS User Agent

- upon failure of routing forward the MM.

The recipient MMS Relay/Server shall generate a delivery report if a delivery report has been requested by the originator MMS User Agent and if the recipient MMS User Agent did not request a delivery report not to be generated or in any case that a VASP has requested a delivery report

- upon receipt of a response to a notification, in case the MM is rejected by the recipient MMS User Agent;
- upon receipt of a forwarding request, in case the MM is forwarded by the recipient MMS User Agent to other MM recipient(s), without prior retrieval;
- upon receipt of a response to an MM's delivery, in case the MM is retrieved by the MM recipient;
- upon receipt of a request for deletion of an MM (i.e., an MM for that retrieval has been deferred).
- upon expiry of the MM, in case the MM is not rejected and not retrieved by the MM recipient before the expiry.

The originator MMS User Agent or VASP, i.e. the MMS User Agent or VASP receiving the delivery report, may match the delivery report to the sent MM by retaining the message identification of the sent MM and comparing it to the received delivery report, which shall contain the message identification of the original MM. In case of multiple MM recipients, it is necessary for the originator MMS User Agent or VASP to retain the MM recipient addresses as well, to match the delivery report to the sent MM.

If a delivery report has been requested by the originator MMS User Agent and if the recipient MMS User Agent did not request a delivery report not to be generated, or in any case that the request for the delivery report comes from a VASP, the recipient MMS Relay/Server

- shall generate the delivery report;
- shall deliver the delivery report to the originator MMS Relay/Server;
- shall store delivery reports in the network until the originator MMS Relay/Server becomes reachable or until the delivery report expires.

In addition to the above, and as depicted in Annex M, if an agreement exists between the MMS Relay/Servers, the originator MMS Relay/Server may request a delivery report regardless of whether the originator MMS User Agent requested the delivery report. Then, if the originator MMS Relay/Server requests a delivery report, the recipient MMS Relay/Server shall generate a delivery report for each MM received for that specific originator MMS Relay/Server.

In the event where both the originator MMS User Agent and the originator MMS Relay/Server request a delivery report, and the recipient refuses to have a report generated:

- if the originator MMS Relay/Server requested a delivery report; the recipient MMS Relay/Server shall produce and provide it to the originator MMS Relay/Server (which shall not forward to the requesting originator MMS User Agent);
- if the originator MMS Relay/Server did not request a delivery report; the recipient MMS Relay/Server shall not produce a delivery report.

Within the delivery report the recipient MMS Relay/Server

- shall provide the MM originator address to the originator MMS Relay/Server;

- shall provide the MM recipient address to the originator MMS Relay/Server;
- shall provide the identification of the original MM for which the delivery report has been generated to the originator MMS Relay/Server;
- shall provide status information how the MM was handled/delivered (e.g. expired, rejected, delivered, forwarded or indeterminate) to the originator MMS Relay/Server;
- may provide further qualification about the status information how the MM was handled/delivered to the originator MMS Relay/Server for displaying the same to the originator;
- shall provide a time stamp when the MM was handled to the originator MMS Relay/Server.

For each MM recipient of the original MM for which the delivery report has been generated and becomes available at the originator MMS Relay/Server, the originator MMS Relay/Server

- shall deliver the delivery report to the originator MMS User Agent (i.e. the recipient MMS User Agent of the delivery report) or VASP, when requested by the originator MMS User Agent and not refused by the recipient.

Within the delivery report the originator MMS Relay/Server

- shall provide the MM recipient's address to the originator MMS User Agent (the recipient MMS User Agent of the delivery report) or VASP;
- shall provide the identification of the original MM for which the delivery report has been generated to the originator MMS User Agent (the recipient MMS User Agent of the delivery report) or VASP;
- shall store delivery reports until the originator MMS User Agent becomes reachable (e.g. user moves back into coverage, switches MMS User Agent on) or until the delivery report expires;
- should store delivery reports until the VASP becomes reachable (e.g. in case of transport failure towards the VASP) or until the delivery report expires.

7.1.6 Read-Reply Report

The MMS Relay/Server shall support the read-reply reporting service. Read-reply reports shall only be generated for MMs.

Upon MM submission the originator MMS User Agent or VASP may be able to request a read-reply report for a specific MM.

Upon MM retrieval the recipient MMS User Agent may receive an indication that a read-reply report is requested for the MM.

After having handled/rendered the MM the recipient MMS User Agent may generate a read-reply report if requested by the originator (MMS User Agent or VASP) and if the originator address (MMS User Agent or VASP address) is available. In case of transporting of application data acc. to clause 7.1.18 the recipient MMS User Agent shall not generate a read-reply report unless it has successfully delivered the MM related information to the application addressed by the destination application identifier.

The originator MMS User Agent or VASP, i.e. the MMS User Agent or VASP receiving the read-reply report, may match the read-reply report to the sent MM by retaining the message identification of the sent MM and comparing it to the received read-reply report, which shall contain the message identification of the original MM. In case of multiple MM recipients, it is necessary for the originator MMS User Agent or VASP to retain the MM recipient addresses as well as to match the read-reply report to the sent MM.

If a read-reply report has been requested by the originator MMS User Agent or VASP and if the recipient MMS User Agent supports the read-reply feature and if the recipient allows its creation the recipient MMS User Agent shall submit the read-reply report to the recipient MMS Relay/Server at the earliest opportunity.

NOTE: Since the MM recipient has the right to deny this service not receiving a read-reply report does not mean the message has not been rendered / handled by the recipient MMS User Agent.

A read-reply report:

- shall contain the MM originator's address
- shall contain the MM recipient's address
- shall contain the message identification of the original MM for which the read-reply report has been generated.
- shall provide status information how the MM was rendered (e.g. read, deleted without being read)
- shall provide a time stamp for when the MM was rendered

The recipient MMS User Agent shall store read-reply reports in the UE until the recipient MMS Relay/Server becomes reachable (subject to support of the read-reply reporting service by the recipient MMS User Agent and storage place being available).

Upon reception of a read-reply report from a recipient MMS User Agent the recipient MMS Relay/Server

- may provide a time stamp for the read-reply report, i.e. it may also override the MMS User Agent's time stamp,
- shall pass the MM originator address unaltered when routing the read-reply report towards the originator MMS User Agent or originator VASP (i.e. the recipient MMS User Agent or recipient VASP of the read reply report)
- shall insert the MM recipient's address into the read-reply report if not yet provided
- may override the recipient's address provided by the recipient MMS User Agent in the read-reply report (subject to MMS service provider's preferences)
- shall resolve the MM originator's address,
- shall route the read-reply report towards the originator MMS User Agent or originator VASP of the original MM.

A special case is where the recipient MMS Relay/Server is also the originator MMS Relay/Server. In this case the MM does not have to be routed forward.

7.1.7 Support for Streaming in MMS

This section defines the service behaviour specific to support for streaming in MMS. The term "According to the normal MMS framework.." indicates those paragraphs which are not specific to streaming but described elsewhere in subclause 7.

MMS supports streaming for the retrieval of MM contents (one or more MM elements). Support for streaming is optional for both the MMS User Agent and the MMS Relay/Server.

The use of streaming for the retrieval of MM contents is independent of the MM submission. The retrieval of MM contents to the recipient MMS User Agent depends on the configuration and the capability of the recipient MMS User Agent and the recipient MMS Relay/Server. MM contents may be either delivered as non-streaming MM elements, or made available for streaming retrieval. The recipient MMS Relay/Server decides whether to use streaming based on the media type and the media format of the subjected MM contents, capability negotiation and/or user settings/preferences. The recipient MMS Relay/Server may convert media types and/or formats of MM contents to make it available for streaming retrieval. If streaming retrieval is used, the streaming-specific protocols, codecs, presentation, session negotiation and control are according to [40] and [41].

According to the normal MMS framework, the recipient MMS Relay/Server shall generate a notification which contains information to enable the recipient MMS User Agent to request for the retrieval of the corresponding MM from the recipient MMS Relay/Server.

Upon retrieve request, the recipient MMS Relay/Server shall deliver a modified MM with one or several presentation descriptions as defined in [41], as one or several MM elements, in place of the corresponding streamable MM contents to the recipient MMS User Agent, if it has made the MM contents available for streaming retrieval. The format of the presentation description is as defined in [41]. MIME type of the format of the presentation description shall be used to indicate the content type of the MM elements, which contain the corresponding presentation description. The presentation description carries all required information to initiate the streaming process by the recipient MMS User Agent in order to retrieve the streamable MM content from the media server as defined in [40]. Example of a presentation description is shown in Annex J.

According to the normal MMS framework, the recipient MMS Relay/server shall base the generation of a delivery report on the receipt of a response to the delivery of the modified MM from the recipient MMS User Agent.

After the successful reception of the MM, which includes the presentation description, the recipient MMS User Agent may initiate a streaming process to retrieve the streamable MM contents depending on the information in the presentation description. According to the normal MMS framework, the recipient MMS User Agent may base the generation of a read-reply report either on the rendering/handling of the modified MM, or on the rendering/handling of the streamable MM contents.

Annex J further depicts the streaming transactions after the decision to offer streamable content is made by the recipient MMS Relay/Server.

7.1.8 Support for Prepaid Service in MMS

An MMS Relay/Server may support the prepaid concept. A prepaid customer may be charged for submitting or retrieving MMs/abstract messages.

In the submission case the originator MMS Relay/Server may first ascertain that the originator of the MM/abstract message is a prepaid customer. The MMS Relay/Server may then initiate a credit check and further processing of the MM/abstract message is put on hold. In the case the customers credit is insufficient for submitting this particular MM/abstract message the originator MMS Relay/Server may reject it. The check may be based on several criteria like:

- size of the MM
- content type
- settings of information elements
- type of the abstract message

In case an MM/abstract message can not be accepted, the originator MMS Relay/Server shall respond with an appropriate status value to the submit request. The MMS User Agent should bring this information to the user’s attention.

In case an MM/abstract message is accepted it is further processed by the MMS Relay/Server.

In the retrieving case the recipient MMS Relay/Server may first ascertain that the recipient of the MM/abstract message is a prepaid customer. The MMS Relay/Server may then initiate a credit check for the particular customer. The check may be performed at the time the MM/abstract message arrives at the recipient MMS Relay/Server. Based on the result the MMS Relay/Server may reject or accept the MM/abstract message. If the MM/abstract message was accepted (with or without previous check) the MMS Relay/Server may perform a credit check at the time the MMS User Agent sends a retrieve request. The check may be based on several criteria as in the sending case.

In case an MM/abstract message can not be retrieved because the customers account balance is too low, the recipient MMS Relay/Server may respond with an appropriate status value to the retrieve request. The MMS User Agent should bring this information to the user’s attention.

Otherwise the MM/abstract message is delivered to the MMS User Agent.

7.1.9 Address Hiding in MMS

An originator MMS User Agent may support a request for the sender's address to be hidden from the recipient(s). An MMSE may support such a request, i.e., it may allow address hiding. In any case, a recipient MMSE shall ensure that a sender's address is hidden from the recipient MMS User Agent when address hiding is requested for an MM.

If the originator's MMS Relay/Server does not allow address hiding (anonymous messages) (e.g. legislation does not permit anonymous messages) a message containing a request for address hiding shall be rejected upon submission and the originator's MMS Relay/Server shall return an error information to the originator MMS User Agent.

In the case of originator's MMS Relay/Server rejects the message because it does not allow address hiding the rejection information shall be delivered in a submit response together with optional status text.

In case the recipient MMS Relay/Server rejects the message because it does not allow address hiding and the originator MMS User Agent has requested a delivery report, then the recipient MMS Relay/Server, via the originator MMS Relay/Server, shall inform the originator of the message rejection within the delivery report.

In case the recipient MMS Relay/Server rejects the message because it does not allow address hiding and the originator MMS User Agent has not requested a delivery report, then the originator MMS Relay/Server may inform the MM originator by generating a new MM which is sent back to the MM originator.

Independent of whether or not the originator's address is shown or hidden to the recipient, the originator may be able to ask for a delivery report to an MM and also receive the delivery report according to the normal behaviour of the MMS framework.

If the originator MMS User Agent has requested both its address to be hidden and a read-reply report the originator MMS User Agent might not receive the read-reply report.

If the recipient forwards the MM outside the MMSE and the peer entity is unknown to the forwarding MMS Relay/Server the recipient MMS Relay/Server shall not transfer the originator's address but replace it with either appropriate coded address or leave the originator address field blank.

In case of forwarding an MM without prior retrieval the forwarding MMS User Agent shall not request her address to be hidden.

If the originator MMS User Agent has requested its address to be hidden and MM is targeted to the VASP/VAS, MMS Relay/Server shall send originator address to the VASP/VAS but not the request of address hiding. If the originator has requested address hiding the originator MMS Relay/Server may replace the originator address with an appropriate coded address, leave the originator address empty, or send the originator address unaltered to the VASP. If the VASP/VAS targeted is not allowed to receive originator address information, e.g. due to privacy issues, the MMS Relay/Server may replace the originator address with an appropriate coded address or leave the originator address empty.

7.1.10 Support for Reply-Charging in MMS

The MMS User Agent may support reply-charging. If the MMS User Agent supports this feature the MMS User Agent shall support the following behaviour.

The MMS Relay/Server may support reply-charging. If the MMS Relay/Server supports this feature the MMS Relay/Server shall support the following behaviour.

The VASP connected to an MMS Relay/Server over MM7 may support reply-charging. If the VASP supports this feature the VASP shall support the following behaviour.

A User of the MMS (the originator MMS User Agent or VASP) may be able to take over the charge for the sending of a reply-MM to their submitted MM from the recipient(s). In case of forwarding, the forwarding MMS User Agent may be able to take over the charge for the sending of a reply-MM to their forwarding MM from the recipient(s), in this case, forwarding MMS User Agent takes the role of originator MMS User Agent. Therefore the originator of an MM (either MMS User Agent, forwarding MMS User Agent or VASP) should be able to mark the MM as reply-charged. The originator's MMS Relay/Server could either accept the user's or VASP’s settings for reply-charging or not and should be able to convey feedback to the originator. It should be possible to take over the charge for reply-MMs from different recipients.

The recipient should be notified if she is not charged for a reply-MM to this particular MM. However, the indication of reply-charging covers only the willingness/fact that a reply-MM to an original MM is free of charge, not that the retrieval of the original MM marked as reply-charged is free of charge. Both the originator and the recipient MMS Relay/Server shall be able to control that not more than one reply-MM per recipient is charged to the originator. The MMS User Agent may indicate to the user if an MM has already been replied to.

The request for reply-charging shall not be passed on to the recipient

- if the recipient is not known to belong to an MMSE peer entity, or
- in the case the MM is forwarded.

NOTE: For this release the following limitations apply: Support for reply-charging in MMS is restricted to MMS User Agents and VASPs belonging to the same MMSE, i.e. originator and recipient MMSE are identical. Reply-charging allows only one reply-MM per recipient, i.e. reply-charging applies to the first successful submission of an MM sent as a reply. Furthermore, a reply-MM is restricted to text only. These limitations may be elaborated further in future releases.

In addition to the service behaviour described in previous clauses the following behaviour is expected to support reply-charging in MMS.

Within the submission of an MM the MM originator (either MMS User Agent or VASP) may indicate a willingness to pay the charge for one reply-MM per MM recipient. In this case the originator MMS User Agent or originator VASP:

- shall indicate the sender's willingness to pay the charge for one reply-MM per MM recipient,
- may define a reply-charging limitation request (e.g. may specify the latest time of submission of the reply-MMs or a maximum size of reply-MMs).

In a response to the MM submission the originator MMS Relay/Server shall inform the MM originator (either MMS User Agent or VASP) whether or not it accepts

- the originator's request for reply-charging in the original MM,
- the reply-charging limitations set by the originator (either MMS User Agent or VASP) in the original MM.

Upon reception of an MM from an originator (either MMS User Agent or VASP) the originator MMS Relay/Server

- may provide reply-charging limitations, i.e. it may also override by further limiting the MMS User Agent's or VASP’s settings for reply-charging limitations,
- shall pass the indication whether or not a reply-MM is requested unaltered when routing the original MM towards the MM recipient(s) if the peer entity is known to be the same MMS Relay/Server,
- shall pass the reply-charging limitations for the reply-MM when routing the original MM towards the MM recipient(s) if the peer entity is known to be the same MMS Relay/Server.

If the MM recipient has requested the original MM to be forwarded to some other address the recipient MMS Relay/Server

- shall not pass any information set by the originator about the reply-charging request towards the addressee(s) of the forwarding request.

If the MM recipient has requested the original MM to be forwarded to some other address, forwarding MMS User Agent may indicate a willingness of forwarding MMS User Agent to pay the charge for one reply-MM per MM recipient. In this case the forwarding MMS User Agent

- shall indicate the forwarding user’s willingness to pay the charge for one reply-MM per MM recipient;
- may define a reply-charging limitation request (e.g. may specify the latest time of submission of the reply-MMs or a maximum size of reply-MMs).

If reply-charging has been requested by the MM originator (either MMS User Agent or VASP) the recipient MMS Relay/Server

- should inform the recipient MMS User Agent with the MM notification and upon MM delivery that the MM originator is willing to pay for a reply-MM to this original MM.
- may notify the recipient about the reply-charging limitations set by the orginator (e.g. the latest time of submission of a reply-MM to the original MM).

When a user intends to send a reply-MM to the MM originator (to the originator MMS User Agent or to the VASP) the recipient MMS User Agent (which is the originator MMS User Agent of the reply-MM):

- shall mark the MM as a reply-MM,
- shall provide the message ID of the original MM which it replies to (if it is the reply-MM),
- shall submit the reply-MM to the recipient MMS Relay/Server,
- may be able to indicate to the user whether this MM has already been replied to,
- may be able to indicate to the user if the reply-charging limitations can not be met.

Upon submission the recipient MMS Relay/Server

- shall reject the reply-MM submission attempt and should convey this information back to the recipient MMS User Agent (which is the originator MMS User Agent of the reply-MM) if the reply-MM submission attempt does not meet the limitations set by the originator (either MMS User Agent or VASP),
- shall be able to uniquely map the reply-MM to the original MM.

7.1.11 MM4 forward routing failure

If the interworking between two MMS Relay/Servers fails and a MM can not be routed forward across MM4, the originator MMS UA should be notified. If the MMS UA is notified the procedures described in this section shall be followed.

In case the originator MMS UA has requested a delivery report to a MM that failed to be routed forward across MM4, the originator MMS Relay/Server shall generate and send a delivery report that informs the originator MMS UA about the error.

In case the originator MMS UA has not requested a delivery report to a MM that failed to be routed forward across MM4, the originator MMS Relay/Server may generate and send a MM that informs the originator MMS UA about the error.

7.1.12 Support for Persistent Network-based Storage

An MMS User Agent and an MMS Relay/Server may support persistent network-based storage functions. The following descriptions apply when MMBoxes are supported.

For MMS Relay/Servers that support MMBoxes, the following additional functions are defined:

- Upon submission, cause the MM to also be stored persistently, if configured or requested;
- Upon arrival, cause the incoming MM to be stored persistently, if configured;
- Cause the MM referenced in a notification to be stored persistently;
- Cause a copy of a forwarded MM to be stored persistently;
- Upload and store an MM into the user's MMBox;
- Forward an MM from the MMBox to one or more recipients;
- Delete one or more MMs;
- View a list of MMs within the MMBox and their associated information elements;
- Update MM state and/or flags;
- Retrieve an MM from the user's MMBox.

7.1.12.1 MM State and MM Flags

The MMS Relay/Server shall support both MM State and MM Flags. The MMS User Agent may support MM State or MM Flags, or both.

While persistently stored, each MM has an MM State, representing the condition under which the MM is stored. The states are: Draft, Sent, New, Retrieved, and Forwarded. These states are mutually exclusive. The MMS Relay/Server shall set the following specific values for the MM State, unless otherwise specified by the MMS User Agent:

- The Draft state shall be set when an MM is uploaded and stored;
- The Sent state shall be set when an MM is also stored as part of a submission;
- The New state shall be set when an incoming MM is stored as part of being received by the MMS Relay/Server;
- The Retrieved state shall be set upon retrieval of an MM;
- The Forwarded state shall be set whenever an MM is forwarded.

In addition to state, MMs may be flagged with keyword values, which shall be set by the MMS User Agent. The flags may be used to perform selections on the MMBox, offering more precise control over which MMs are to be returned on a view request.

7.1.12.2 Requests to Store MMs within an MMBox

The MMS Relay/Server shall store an MM into an MMBox under the following conditions:

- Arrival of an MM, prior to notification, if configured and enabled for the recipient's MMBox;
- Store request by an MMS User Agent, based on a Message Reference received in a notification;
- MMS User Agent submitting an MM, which also includes a store request;
- MMS User Agent forwarding an MM, which also includes a store request;
- MMS User Agent uploading an MM for storage into the MMBox;

The MMS Relay/Server shall provide the Message Reference from the newly stored MM to the MMS User Agent.

7.1.12.3 Requests to Retrieve MMBox Content

The MMS Relay/Server shall support the following operations on the MMs within an MMBox, or on the MMBox itself:

- Retrieve an MM;
- Forward an MM;
- Store (update) state and flags on an MM;
- View information elements within selected MMs;

The Store and View operations shall return a Message Reference to selected MMs, in addition to their other functions.

7.1.12.4 MM Deletions

MMs stored within an MMBox shall be retained until:

- Automatic deletion occurs because the time of expiry was exceeded;
- The MMS User Agent issues a request to delete an MM based on a Message Reference obtained from an MMBox operation.

7.1.12.5 MMBox Service Constraints

MMS Relay/Servers supporting MMBoxes should not store the same MM twice within an MMBox.

NOTE: If the operator has configured automatic MMBox storage for incoming MMs, and the MMS User Agent issues a request to store an MM within the MMBox for a newly arrived MM, the MMS Relay/Server should store the newly arrived MM only once.

MMS Relay/Servers that support MMBoxes shall not generate multiple delivery reports of the same MM status value for MMs stored within the MMBox.

MMS User Agents that support MMBoxes shall not generate multiple read-reply reports for MMs stored within an MMBox.

7.1.13 Support for Value Added Services (VAS) in MMS

The MMS Relay/Server may support services, in addition to user-to-user messaging, that are either provided by the MMS operator or by third-party Value Added Service Providers (VASP). Examples of services that may be provided as:

- Messages that originate from the VASP to a single or mass-distribution of recipients;
- Messages that originate from a MMS Relay/Server to the VASP that may generate a VASP reply or a new MM submission.

NOTE: MMS Relay/Server may receive multimedia message from MM1, MM3, MM4 or MM7 Reference points before routing forward message to the VASP. Messages originated from the VASP may be targeted to the recipient via MM1, MM3, MM4 or MM7 Reference points. In a case of the recipient or the originator is outside a single MMSE (outside MMSE to which VASP is connected) special functionalities are not specified in this release (e.g. the recipient MMS User Agent may deny generating Delivery report). Future releases may expand this support across multiple MMSEs.

7.1.13.1 Authentication

MM7 should use transport layer security mechanisms to authenticate the VASP in this release.

For example, if HTTP is used as an MM7 transport, many optional authentication mechanisms are available. The MMS Relay/Server or the VASP may use the mechanisms defined in [65],” basic” and “digest” authentication to authenticate the VASP during each session established for message submission. Each VASP may send a VASP ID and a password before any transactions will be allowed by the MMS Relay/Server. For additional security, HTTP may be carried over a TLS [66] session to the MM7 interface.

Alternatively, authentication mechanisms based on public/private key cryptography and certificates may also be used. Key management is out of scope for this release.

The VASP may authenticate the MMS Relay/Server using similar mechanisms. The exact nature of these authentication procedures is not dictated by this document, however the MMS Relay/Server may supply its identification as part of the request information.

7.1.13.2 Authorisation

The MMS Relay/Server should authorise the VAS to send MM to the MMS UA. The authorisation shall be completed during each session established by the VAS. For example, if the VAS attempts to send a MM to the MMS Relay/Server when the VAS is not authorized, then the MMS Relay/Server should not permit the operation .

7.1.13.3 Confidentiality

The interface between MMS Relay/server and VASP may be carried over an encrypted and secure bearer, e.g. HTTP over SSL or TLS, or by use of application-layer encryption. This is an optional feature and may be further elaborated in future releases.

7.1.13.4 Charging Information

VASP may provide service codes that contain billing information that may be transferred to the MMS Relay/Server and passed directly to the billing system without intervention.

If a commercial agreement between the VASP and the recipient exists, the VASP may provide an indication to the MMS Relay/Server which party is expected to be charged for an MM submitted by the VASP, e.g. the sending, receiving, both parties or neither.

NOTE: Warning. Allowing a VASP to indicate which party is expected to be charged may lead to abuse. How to protect against this abuse is not in the scope of this specification.

If a commercial agreement between the MMSE to which the VASP is connected and a third party exists, a VASP may provide an indication to the MMS Relay/Server that this third party is expected to be charged for services which this VASP provides to any other user(s) on behalf of this third party.

NOTE: Warning. Usage of third party charging may lead to abuse. How to protect against this abuse is not in the scope of this specification.

7.1.13.5 Message Distribution Indicator

A Message Distribution Indicator may be provided for the whole Multimedia Message coming from a VASP. The indicator is purely informational, e.g. an MMS User Agent is not responsible for any functionality regarding message redistribution. The aim is to indicate that the MM content is not to be redistributed.

NOTE: DRM-protection of an MM, as specified in section 7.1.15, takes precedence over Message Distribution Indicator from REL-6 onwards.

7.1.13.6 Identification of applications that reside on MMS VAS Applications

Applications that reside on a MMS VAS Application (see section 7.1.18) may trigger a VAS to submit or receive abstract messages over the MM7 reference point. These applications shall be identified in the abstract messages separately from the identification of the VASP and VAS. The identification of the VASP and VAS should not be affected by the addition of these new application identification fields. It is the responsibility of the VASP and VAS to maintain the connection of the identification to the applications that reside on the MMS VAS Application, and, as such, is out-of-scope for the present document.

7.1.14 Handling of MMS-related information on the (U)SIM

NOTE : This section does not apply when the MMS-UA is implemented within equipment which does not support a (U)SIM.

An MMS User Agent shall use the MMS related information stored in the (U)SIM [67] or SIM [75], if present, according to the definitions in this subclause 7.1.14 - unless otherwise specified by the user. This information comprises:

- MMS connectivity information, as defined in Annex F. This information is used to connect to the network for the purpose of accessing the MMS Relay/Server,
- MMS user preferences, as defined in Annex F, and
- MMS notifications.

MMS connectivity information, on the (U)SIM includes a number of sets of MMS connectivity parameters. Some of these sets of MMS connectivity parameters are preset by the issuer of the (U)SIM with the first set being the default. Such default preset MMS connectivity parameter set shall be selected unless otherwise specified by the user.

The MMS connectivity information on the (U)SIM includes preferences for the selection of Interface to Core Network and Bearer parameters (cf. Annex F) as defined in [67] or [75]. If these are stored on the (U)SIM the MMS-capable UE shall automatically select the Interface to Core Network and Bearer parameters based on their order of precedence defined on the (U)SIM unless otherwise specified by the user.

MMS user preferences information, which is stored on the (U)SIM, shall be used by an MMS User Agent for user assistance in preparation of terminal-originated MMs (e.g. default values for parameters that are often used).

MMS notifications, should be stored on the (U)SIM together with an associated status by a recipient MMS User Agent:

- When an MMS User Agent has deleted a notification which was stored on the (U)SIM, the associated status shall be set to “Free space”
- When an MMS User Agent stores a notification on the (U)SIM, the associated status shall be set to “Used space”

- When a recipient MMS User Agent has not handled the notification which is stored on the (U)SIM (e.g. the details of the notification were not shown to the user), the associated status shall be set to “notification not read”,
- When a recipient MMS User Agent has handled the notification which is stored on the (U)SIM (e.g. the details of the notification have been shown to the user), the associated status shall be set to “notification read”,
- When a recipient MMS User Agent has not retrieved an MM based on the notification which is stored on the (U)SIM, the associated status shall be set to “MM not retrieved” – unless the recipient MMS User Agent has rejected or forwarded the MM,
- When a recipient MMS User Agent has retrieved an MM based on the notification which is stored on the (U)SIM, the notification shall be either deleted or the associated status shall be set to “MM retrieved”,
- When a recipient MMS User Agent has rejected an MM based on the notification which is stored on the (U)SIM, the notification shall either be deleted or the associated status shall be set to “MM rejected”,
- When a recipient MMS User Agent has forwarded an MM based on the notification which is stored on the (U)SIM, the notification shall either be deleted or the associated status shall be set to “MM forwarded”,

Upon an attempt to store a notification on a (U)SIM, an MMS User Agent should ensure that the notification is not lost unless the (U)SIM acknowledges the storage attempt to be successful.

7.1.14.1 Handling of MMS-related transfer to the USIM

When an MMS notification is addressed to the USIM, then:

- the application identifier functionality as defined in 7.1.18.2.2 applies.
- the application identifier syntax as defined in 3GPP TS 31.111 [87] shall be used.

the ENVELOPE mechanisms for transferring the MMS notification to the USIM defined in 3GPP TS 31.111 [87] shall be used.

7.1.15 Support for Digital Rights Management in MMS

The support of DRM in MMS shall conform to the OMA DRM specifications [76], [77] and [78].

DRM-protection of an MM shall take precedence over Message Distribution Indication and over MM7 Content Adaptation Restriction from REL-6 onwards.

The following sections describe the application of DRM protection to MMS.

7.1.15.1 DRM-protected content within an MM

An MM may include one or more DRM-protected MM elements. DRM protection of MM elements shall be performed according to [76], [77] and [78], with each MM element being protected separately. Each DRM-protected MM element shall be encapsulated as a DRM object, i.e. ‘DRM Message’ or ‘DCF’.

In particular, DRM protection shall neither be applied to an MM as a whole (MMS PDU), nor to any presentation description (e.g. SMIL) within an MM.

The headers (i.e. content-location or content-ID) used by the presentation description (e.g. SMIL) to refer to a DRM object shall be placed as MMS body part headers, due to MIME-based structure of the MM.

In case of Separate Delivery, the ‘X-Oma-Drm-Separate-Delivery’ header, if present, shall be placed as MMS body part header, due to MIME-based structure of the MM.

MMS body part headers shall not be DRM-protected.

7.1.15.2 DRM-related User Agent beaviour

An MMS User Agent may support Digital Rights Management, DRM according to [76], [77], [78]. An MMS User Agent that supports the DRM restrictions shall indicate this support in its terminal capability profile, as defined in the DRM specifications.

NOTE: E.g. after having received an MM containing a 'DRM Message' object, an MMS User Agent does neither use that DRM-protected MM element while composing a new MM nor store it into a user accessible persistent network storage (e.g. MMBox).

7.1.15.3 DRM-related Relay/Server behaviour

An MMS Relay/Server shall support Forward Lock, Combined Delivery and Separate Delivery DRM functionalities according to [76], [77], [78].

7.1.15.3.1 Support for Forward Lock and Combined Delivery

For Forward Lock and Combined Delivery support, the MMS Relay/Server shall ensure that no single DRM-protected MM element is conveyed to any receiving entity, such as an MMS User Agent, an MMS Relay/Server, a user-accessible persistent network-storage (e.g. MMBox), which does not comply with OMA DRM specifications [76], [77].

In particular, the MMS Relay/Server shall not:

- deliver any DRM-protected MM elements ('DRM Message') to an MMS User Agent which does not support DRM;
- route forward any DRM-protected MM elements ('DRM Message') over MM3, MM4 or MM7 to a receiving entity which does not support DRM;
- store any DRM-protected MM elements ('DRM Message') into a user accessible persistent network storage (e.g. MMBox);
- forward any DRM-protected MM elements ('DRM Message') prior to MM retrieval or from the MMBox.

The MMS Relay/Server shall not alter or strip-off any part of the 'DRM Message' header (e.g. the Boundary parameter declaration).

7.1.15.3.2 Support for Separate Delivery

If the recipient MMS User Agent supports DRM Separate Delivery the MMS Relay/Server shall relay any DCF object unaltered. In particular it shall not strip-off any part of the DCF body or headers (e.g. the 'X-Oma-Drm-Separate-Delivery' header).

The MMS Relay/Server shall accept separate delivery protected content on all interfaces.

If the recipient MMS User Agent does not support separate delivery the MMS Relay server shall either:

- Replace all non supported DRM protected elements by a descriptive error text and/or a placeholder and send the modified MM to the recipient MMS User Agent, or
- Not deliver the whole MM to the MMS User Agent.

7.1.16 Support of Hyperlinks in MMS

An MMS User Agent should support hyperlinks within an MM as described below:

NOTE: There is no requirement on the MMS User Agent for supporting any specific transport protocols for following URLs conveyed in hyperlinks.

If a hyperlink is embedded in a SMIL presentation it shall be according to PSS SMIL [74].

If the MMS User Agent supports Rich Text Encoding in XHTML Mobile Profile [74] the hyperlink may also be embedded according to XHTML Mobile Profile [74].

An MMS User Agent should ask for end-user confirmation before following a hyperlink which triggers a terminal action (e.g. placing a phone call) or which refers to a resource that is not part of the same MM.

NOTE: End user confirmation is recommended as accessing a resource on the network might result in additional charges.

7.1.17 Support of Messaging Service Control Function

The MMS Relay/Server may support interworking with a MSCF, which allows the operator to handle advanced addressing within the MMSE.

Whether the MMS Relay/Server shall interact depends on the following trigger configuration data in the MMSE:

- User specific trigger, i.e. the interaction with the MSCF is invoked if the user is provisioned with the relevant trigger information.
- Address specific trigger, i.e. the interaction with the MSCF is invoked, if the recipient address is configured in the MMS Relay/Server with a MSCF trigger profile.

7.1.17.1 Triggering of interactions with the MSCF

The MMS Relay/Server shall support procedures for the interaction with the MSCF together with the following MMS services:

- at the time of MM submission via the MM1 interface
- at the time of submission via the MM7 interface
- prior to the MM notification via the MM1 interface.

Whether the interaction with the MSCF is invoked depends on the provisioning of the following triggers definitions in the MMS Relay/Server:

Users profile based Trigger:

The sending user is provisioned with a trigger information for the invocation of the interaction with the MSCF function.

Note, the provisioned user may be an MMS subscriber or a VASP.

Address based Trigger:

The MMS Relay/Server keeps a trigger criterion for the recipient address provided in a submit request.

The table below defines the applicability of trigger definitions to MMS services:

Table 1: Applicability of Trigger Definitions to MMS services

Trigger MMS Service	User profile specific	Address specific
MM1 submission	YES	YES
MM7 submission	YES	YES
MM1 notification	YES	NO

7.1.17.2 User Profile Trigger criteria

If the Relay/Server supports the interworking with MSCF it shall be possible to provision trigger definitions in the MMS user profile. Any MMS subscriber can be provided with a maximum of two trigger definitions. A VASP can be provided with the Submit trigger definition only. A user profile trigger definition shall provide at least the attributes defined in the table below:

Table 2: User Profile to support Messaging Service Control Function

Parameter	Value	Description
Trigger Point	Submit / Delivery	Specifies the MMS service for which the MM10 interworking process shall be invoked. Each entry shall contain one trigger definition. For a VASP only the Submit value is applicable.
MSCF Address	Host and Realm indication of the MSCF	Address information to route the MM10 interrogation request to the MSCF.
Application identification	String defined by the operator	Identification of the application on the MSCF.
Recovery handling	Continue / Reject	Specifies the MMS Relay/Server process handling if the interrogation to the MSCF fails abnormally.

7.1.17.3 Address based Trigger criteria

The MMS Relay/Server may keep a list of recipient addresses for which interworking with the MSCF is required. The address criteria may be managed independently for MM1 submission and MM7 submission. For MM7 submission criteria definition per VASP may be supported in addition.

For each of the recipient address criteria at least the following trigger definition shall be supported.

Table 3: User Profile to support Messaging Service Control Function

Parameter	Value	Description
Address Criterion	Address string	Specifies the recipient address in a submit request that shall lead to invocation of an MM10 interworking process. Address string may be a RFC2822 address, a PLMN address or any other address (alphanumeric short code etc.). Note, address string may contain wildcards to allow address range definitions.
MSCF Address	Host and Realm indication of the MSCF	Address information to route the MM10 interrogation request to the physical MSCF.
Application identification	String defined by the operator	Identification of the application on the MSCF.
Recovery handling	Continue / Reject	Specifies the MMS Relay/Server process handling if the interrogation to the MSCF fails abnormally.

7.1.17.4 Charging impact

The MSCF shall be able to influence the content of the CDR created at the MMS Relay/Server. The data provided to the MMS Relay/Server is transparent for the MMS Relay/Server and will be transferred to the post processing or real-time charging services.

The MSCF is able to modify the recipient routeing addresses. CDRs generated by the MMS Relay/Server shall contain the recipient addresses originally requested by the MMS User Agent and the routeing recipient addresses requested by the MSCF.

The MSCF shall be able to request an original MM to be sent to a number of alternative recipients (copy/forward). The MMS Relay/Server copies/forwards the MM as requested by the MSCF. In this case the MMS Relay/Server shall create CDRs for all result recipient addresses as requested by the MSCF.

7.1.17.5 Message handling

The handling of following MMS services may result in triggering the MSCF :

- MM1 Submission
- MM1 Delivery
- MM7 Submission

This section defines the message handling procedures in the MMS Relay/Server if interworking with an MSCF is supported. The message handling process shall follow the order as defined by the description below.

7.1.17.5.1 MM1 Submission

7.1.17.5.1.1 User Profile based trigger

7.1.17.5.1.1.1 Interrogation Request

For any MM1 submitted message the MMS Relay/Server shall query the sender's user profile entry for a profile specific trigger as defined in section 7.1.17.2. If an profile specific trigger for submission is in place, the MMS Relay/Server shall suspend message processing and send the MM10 interrogation request as defined in section 8.9 to the MSCF.

The following principles for the composition and processing of the MM10 interrogation request shall apply:

The MMS Relay/Server shall provide as the served user identity the sender's key identification as derived from the user's profile (e.g. the MSISDN).

In the Sender address parameter the MMS Relay/Server may provide the sender identification intended for presentation purposes. This identification may be the sender address as provided by the user agent.

The MM10 interrogation request shall contain the list of all recipient addresses provided by the user in the submitted message. For each of the recipient addresses a qualification of the used address field (To, CC, BCC) shall be given.

The sender may request multiple recipients for one message. If the MM10 interrogation request is triggered due to a user profile based trigger then all recipient addresses shall be provided to the MSCF. The MMS Relay/Server shall provide an unique reference (sequence number) for each of the recipient addresses. This reference shall allow the MMS Relay/Server to track the modification of the original address after processing in the MSCF.

7.1.17.5.1.1.2 Interrogation Response

The MSCF shall respond to the MM10 interrogation request with an MM10 interrogation response as defined in section 8.9.

The MSCF may return for each specific recipient addresses a result. The result shall provide a reference to the initial recipient address of the MM10 interrogation request by means of the unique reference (sequence number). If the MSCF requests additional recipient addresses in the response (e.g. forwarding addresses), then it shall allocate new reference numbers. The MSCF shall continue to use reference number values greater then the highest value provided by the MMS Relay/Server.

Each result recipient address may consist of several components.

Routeing Address

If the result recipient address contains a Routeing Address then the MMS Relay/Server shall continue handling of the MM as follows:

- The Routeing Address may contain recipient addresses in all formats that are specified for the MM1 interface. In this case the MMS Relay/Server shall continue handling of the recipient according to the definitions of this specification for the MM1 interface.

  A Routeing Address provided in this format may be subject to a subsequent MM10 interrogation request if the result matches to an address specific trigger.

- The Routeing Address may contain a routeing address composed according to the MM4 address coding on SMTP level (refer to section 8.4.5.1). In this case the MMS Relay/Server shall analyse the FQDN provided. If the FQDN refers to the own domain, then the message is treated locally within the MMSE. If the FQDN refers not to the own domain, then the message shall be forwarded according to the definitions for the MM4 interface.

A Routeing Address provided in this format shall not be subject to a subsequent MM10 interrogation request.

If the Result Recipient Address contains no Routeing Address for a specific reference (sequence number) then the original recipient is omitted, i.e. removed from the list of recipients.

If the MSCF requests the recipient address to be kept unmodified, then the initial recipient address value shall be returned with its reference (sequence number).

Presentation Address

The Presentation Address is only applicable if a Routeing Address has been provided by the MSCF.

The value contained in the Presentation Address is used for identification presentation to the recipient user, i.e. the presentation of address information in the To:, CC: and BCC: fields presented to the recipient.

If a Presentation Address is provided by the MSCF in the MM10 interrogation response, then the MMS Relay/Server shall replace the corresponding address in the recipient field and store it together with the message for further processing.

The MMS Relay/Server shall not use the presentation address for message routeing purposes.

Sender Address

The Sender Address is used for sender identification to the recipient user, i.e. the presentation of address information in the From: field presented to the recipient.

If the sender address is provided by the MSCF in the MM10 interrogation response then the MMS Relay/Server replace the sender address field and store it together with the message for further processing.

In order to support delivery and read reply reporting via the MM4 interface, the Sender Address value has to refer to the address of the original sender. MSCF applications may take this into account when setting up values for this attribute. If the addressing service requires presentation of a "not routeable" sender address to the recipient, then a delivery report request should be suppressed.

Full support of delivery and read reply reports in conjunction with the MSCF may be defined in later versions of this specification.

7.1.17.5.1.2 Address specific trigger

7.1.17.5.1.2.1 Interrogation Request

After the user profile based interrogation or if no profile based trigger criteria was met the MMS Relay/Server shall check if an address specific trigger is in place. The verification of the address specific trigger shall be based on

- the outcome of the previous MM10 interrogation procedure if a profile based trigger was met. In this case the MMS Relay/Server shall consider only the Routeing Address part of the Result Recipient Address received from the MSCF,
- the recipient address information of the initial message if the user profile based trigger was not met.

The MMS Relay/Server shall analyse all recipient addresses of a submitted MM.

An address based trigger criteria is met if both the recipient address and the address criterion string match fully. Note, the address criterion definition may allow wildcards to define address ranges.

If the recipient address is a PLMN address the MMS Relay/Server shall first attempt to convert the address into international format based on the numbering plan of the HPLMN, i.e. the numbering plan applicable for the serving MMS Relay/Server. If successful the address comparison shall happen based on the international format version of the number.

If the recipient address can not be converted into international format (e.g. in case of short codes) the address digits shall be used for comparison unmodified.

If for one or several recipient addresses match the criteria, then the MMS Relay Server shall send an interrogation request to the MSCF as specified in section 8.9. One MM10 interrogation per matched recipient address shall be sent.

The MMS Relay/Server shall provide as the served user identity the sender's key identification as derived from the user's profile (e.g. the MSISDN).

In the Sender address parameter the MMS Relay/Server may provide the sender identification intended for presentation purposes. This identification may be either the sender address as provided by the MMS User Agent or the value of the Sender Address returned form an MSCF in result of the previous MM10 interrogation request for a user profile based trigger.

The MM10 interrogation request shall contain only the recipient address that matches the address specific trigger of the MMS Relay/Server. The MMS Relay/Server shall provide reference (sequence number) for the recipient address.

7.1.17.5.1.2.2 Interrogation Response

The MSCF shall respond to the MM10 interrogation request with an MM10 interrogation response as defined in section 8.9.

The MSCF may return result one or more recipient addresses. If the MSCF requests additional recipient addresses in the response (e.g. forwarding addresses), then it may allocate new reference numbers above the value used in the interrogation.

The result recipient address may consist of several components.

Routeing Address

If the result recipient address contains a Routeing Address then the MMS Relay/Server shall continue handling of the MM as follows:

- The Routeing Address may contain recipient addresses in all formats that are specified for the MM1 interface. In this case the MMS Relay/Server shall continue handling of the recipient according to the definitions of this specification for the MM1 interface.
- The Routeing Address may contain an routeing address composed according to the MM4 address coding on SMTP level (refer to section 8.4.5.1). In this case the MMS Relay/Server shall analyse the FQDN provided. If the FQDN refers to the own MMSE, then the message is treated internally. If the FQDN refers not to the own MMSE, then the message shall be forwarded according to the definitions for the MM4 interface.

If the Result Recipient Address contains no Routeing Address with a specific reference (sequence number) then the original recipient is omitted, i.e. removed from the list of recipients.

Note: Omission only effects the message to this individual address. Messages to multiple recipients not being subject to the address specific trigger may still contain unmodified addresses as provided by the sender.

If the MSCF requests the recipient address to be kept unmodified, then the initial recipient address value shall be returned with its reference (sequence number)

Presentation Address

The Presentation Address is only applicable if a Routeing Address has been provided by the MSCF.

The value contained in the Presentation Address is used for identification presentation to the recipient user, i.e. the presentation of address information in the To:, CC: and BCC: fields presented to the recipient.

If a Presentation Address is provided by the MSCF in the MM10 interrogation response, then the MMS Relay/Server shall store the modified recipient field together with the message for further processing.

The MMS Relay/Server must not use the presentation address for message routeing purposes.

Sender Address

The Sender Address is used only for sender identification to the recipient user provided by the result recipient address, i.e. the presentation of address information in the From: field presented to this recipient.

If the sender address is provided by the MSCF in the MM10 interrogation response then the MMS Relay/Server shall store the modified sender address with the message for further processing.

In order to support delivery and read reply reporting via the MM4 interface, the Sender Address value has to refer to the address of the original sender. MSCF applications may take this into account when setting up values for this attribute. If the addressing service requires presentation of a "not routeable" sender address to the recipient, then delivery and read reply report request should be suppressed.

Full support of delivery and read reply reports in conjunction with the MSCF may be defined in later versions of this specification.

7.1.17.5.2 MM1 Delivery

7.1.17.5.2.1 Interrogation Request

Prior to the notification about an MM to be delivered the MMS Relay/Server shall query the recipient's user profile entry for a profile specific trigger as defined in section 7.1.17.2. If a profile specific trigger for delivery is in place, the MMS Relay/Server shall suspend message processing and send the MM10 interrogation request as defined in section 8.9 to the MSCF.

The MMS Relay/Server shall provide as the served user identity the recipient's key identification as derived from the user's profile (e.g. the MSISDN).

The MM10 interrogation request shall contain the recipient addresses (including the served user) that are contained in the incoming message. For each of the recipient addresses a qualification of the used address field (To, CC, BCC) shall be given.

The MMS Relay/Server shall provide a unique identification of each of the recipient addresses in case of multiple recipients. This identification shall allow the MMS Relay/Server to track the modification of the original address after processing in the MSCF.

In the Sender address parameter the MMS Relay/Server shall provide the sender identification intended for presentation to the recipient MMS User Agent. This identification shall contain the sender address as received with the message to be delivered.

7.1.17.5.2.2 Interrogation Response

The MSCF is able to respond to the MM10 interrogation request with an MM10 interrogation response as defined in section 8.9. For the processing of the MM10 interrogation response the following principles shall apply:

The MSCF may return for each of the specific recipient addresses a result recipient address. This shall be achieved by returning the unique identification for each of the recipients. If the MSCF requests additional recipient addresses in the response (e.g. forwarding addresses), then it may allocate new reference numbers. The MCG shall continue to use reference number values greater then the highest value provided by the MMS Relay/Server in the Interrogation request.

Each result recipient address may consist of several components.

Routeing Address

A routeing address shall only be returned if the MSCF requests alternate recipient addresses for the message, i.e. to copy or forward the received MM.

If the result recipient address contains a Routeing Address then the MMS Relay/Server shall continue handling of the MM as follows:

- the Routeing Address may contain recipient addresses in all formats that are specified for the MM1 interface. In this case the MMS Relay/Server shall copy/forward the MM using the alternative recipient address,
- the Routeing Address may contain a recipient address composed according to the MM4 address coding on SMTP level (refer to section 8.4.5.1). In this case the MMS Relay/Server shall copy/forward the MM using the alternative recipient address. It shall analyse the FQDN provided. If the FQDN refers to the own MMSE, then the message is treated internally. If the FQDN refers not to the own MMSE, then the message shall be forwarded according to the definitions for the MM4 interface.

Presentation Address

The Presentation Address is used for identification presentation to the recipient user.

If a Presentation Address is provided by the MSCF in the MM10 interrogation response, then the MMS Relay/Server shall substitute the recipient field (To, CC, BCC) with this information. The MMS Relay/Server must not use the presentation address for message routeing or forwarding purposes.

Sender Address

The Sender Address is used for sender identification to the recipient user, i.e. the presentation of address information in the From: field presented to the recipient.

If the sender address is provided by the MSCF in the MM10 interrogation response the MMS relay server shall store the modified sender address with the message for further processing.

7.1.17.5.3 MM7 Submission

7.1.17.5.3.1 VASP Profile based trigger

7.1.17.5.3.1.1 Interrogation Request

For any MM7 submitted message the MMS Relay/Server shall query the VASP's profile entry for a profile specific trigger as defined in section 7.1.16.2. If a profile specific trigger for submission is in place, the MMS Relay/Server shall suspend message processing and send the MM10 interrogation request as defined in section 8.9 to the MSCF.

The MMS Relay/Server shall provide as the served user identity the sender's key identification as derived from the VASP's profile (e.g. VASP-ID, VAS-ID).

In the Sender address parameter the MMS Relay/Server may provide the sender identification intended for presentation purposes. This identification may be the sender address as provided by the VASP.

The MM10 interrogation request shall contain the list of all recipient addresses provided by the user in the submitted message. For each of the recipient addresses a qualification of the used address field (To, CC, BCC) shall be given.

The sender may request multiple recipients for one message. If the MM10 interrogation request is triggered due to a user profile based trigger then all recipient addresses shall be provided to the MSCF. The MMS Relay/Server shall provide a unique reference (sequence number) for each of the recipient addresses. This reference shall allow the MMS Relay/Server to track the modification of the original address after processing in the MSCF.

If the recipient address of the MM7_submit.REQ is provided in encrypted or obfuscated format then the MMS Relay/Server shall decrypt it prior to invocation of the MM10 interrogation request.

7.1.17.5.3.1.2 Interrogation Response

The MSCF shall respond to the MM10 interrogation request with an MM10 interrogation response as defined in section 8.9. For the composition and processing of the MM10 interrogation response the following principles shall apply:

The MSCF may return for each specific recipient addresses an result. The result shall provide a reference to the initial recipient address of the MM10 interrogation request by means of the unique reference (sequence number). If the MSCF requests additional recipient addresses in the response (e.g. forwarding addresses), then it shall allocate new reference numbers. The MCG shall continue to use reference number values greater then the highest value provided by the MMS Relay/Server.

The result recipient address may consist of several components.

Routeing Address

If the result recipient address contains a Routeing Address then the MMS Relay/Server shall continue handling of the MM as follows:

- the Routeing Address may contain recipient addresses in all formats that are specified for the MM7 interface. In this case the MMS Relay/Server shall continue handling of the recipient according to the definitions of this specification for the MM7 interface.

Note: A Routeing Address provided in this format may be subject to a subsequent MM10 interrogation request if for the result matches to an address specific trigger,

- the Routeing Address may contain an routeing address composed according to the MM4 address coding on SMTP level (refer to section 8.4.5.1). In this case the MMS Relay/Server shall analyse the FQDN provided. If the FQDN refers to the own domain, then the message is treated locally within the MMSE. If the FQDN refers not to the own domain, then the message shall be forwarded according to the definitions for the MM4 interface.
  Note: A Routeing Address provided in this format shall not be subject to a subsequent MM10 interrogation request.

If the Result Recipient Address contains no Routeing Address for a specific reference (sequence number) then the original recipient is omitted, i.e. removed from the list of recipients.

If the MSCF requests the recipient address to be kept unmodified, then the initial recipient address value shall be returned with its reference (sequence number).

Presentation Address

The Presentation Address is only applicable if a Routeing Address has been provided by the MSCF.

The value contained in the Presentation Address is used for identification presentation to the recipient user, i.e. the presentation of address information in the To:, CC: and BCC: fields presented to the recipient.

If a Presentation Address is provided by the MSCF in the MM10 interrogation response, then the MMS Relay/Server shall store the modified recipient field together with the message for further processing.

The MMS Relay/Server must not use the presentation address for message routeing purposes.

Sender Address

The Sender Address is used for sender identification to the recipient user, i.e. the presentation of address information in the From: field presented to the recipient.

If the sender address is provided by the MSCF in the MM10 interrogation response then the MMS Relay/Server shall store the modified sender address with the message for further processing.

In order to support delivery and read reply reporting via the MM4 interface, the Sender Address value has to refer to the address of the original sender. MSCF applications may take this into account when setting up values for this attribute. If the addressing service requires presentation of a "not routeable" sender address to the recipient, then delivery report request should be suppressed.

Full support of delivery and read reply reports in conjunction with the MSCF may be defined in later versions of this specification.

7.1.17.5.3.2 Address specific trigger

7.1.17.5.3.2.1 Interrogation Request

After the profile based interrogation or if no profile based trigger was identified the MMS Relay/Server shall check if an address specific trigger is in place. The verification of the address specific trigger shall be based on

- the outcome of the previous MM10 interrogation procedure if a profile based trigger was met. In this case the MMS Relay/Server shall consider only the Routeing Address part of the Result Recipient Address received from the MSCF.
- The recipient address information of the initial message if the user profile based trigger was not met.

The MMS Relay/Server shall analyse all recipient addresses of a submitted MM.

An address based trigger criteria is met if the both the recipient address and the address criterion string match fully. Note, the address criterion definition may allow wildcards to define address ranges.

If the recipient address is a PLMN address the MMS Relay/Server shall first attempt to convert the address into international format based on the numbering plan of the HPLMN, i.e. the numbering plan applicable for the serving

MMS Relay/Server. If successful the address comparison shall happen based on the international format version of the number.

If the recipient address can not be converted into international format (e.g. in case of short codes) the address digits shall be used for comparison unmodified.

If for one or several recipient addresses match the criteria, then the MMS Relay/Server shall send an interrogation request to the MSCF as specified in section 8.9. One MM10 interrogation per matched recipient address shall be sent.

The MMS Relay/Server shall provide as the served user identity the sender's key identification as derived from the user's profile (e.g. the MSISDN).

In the Sender address parameter the MMS Relay/Server may provide the sender identification intended for presentation purposes. This identification may be either the sender address as provided by the user agent or the value of the Sender Address returned form an MSCF in result of the previous MM10 interrogation request for a user profile based trigger.

The MM10 interrogation request shall contain only the recipient address that match the address specific trigger of the MMS Relay/Server. The MMS Relay/Server shall provide a reference (sequence number) for the recipient address.

7.1.17.5.3.2.2 Interrogation Response

The MSCF shall respond to the MM10 interrogation request with an MM10 interrogation response as defined in section 8.9. For the composition and processing of the MM10 interrogation response the following principles shall apply:

The MSCF may return result recipient addresses. If the MSCF requests additional recipient addresses in the response (e.g. forwarding addresses), then it may allocate new reference numbers above the value used in the MM10 interrogation.

The result recipient address may consist of several components.

Routeing Address

If the result recipient address contains a Routeing Address then the MMS Relay/Server shall continue handling of the MM as follows:

- the Routeing Address may contain recipient addresses in all formats that are specified for the MM1 interface. In this case the MMS Relay/Server shall continue handling of the recipient according to the definitions of this specification for the MM1 interface,
- the Routeing Address may contain an routeing address composed according to the MM4 address coding on SMTP level (refer to section 8.4.5.1). In this case the MMS Relay/Server shall analyse the FQDN provided. If the FQDN refers to the own MMSE, then the message is treated internally. If the FQDN refers not to the own MMSE, then the message shall be forwarded according to the definitions for the MM4 interface.

If the Result Recipient Address contains no Routeing Address with a specific reference (sequence number) then the original recipient is omitted, i.e. removed from the list of recipients.

Note: Omission only affects the message to this individual address. Messages to multiple recipients not being subject to the address specific trigger may still contain unmodified addresses as provided by the sender.

If the MSCF requests the recipient address to be kept unmodified, then the initial recipient address value shall be returned with its reference (sequence number)

Presentation Address

The Presentation Address is only applicable if a Routeing Address has been provided by the MSCF.

The value contained in the Presentation Address is used for identification presentation to the recipient user, i.e. the presentation of address information in the To:, CC: and BCC: fields presented to the recipient.

If a Presentation Address is provided by the MSCF in the MM10 interrogation response, then the MMS Relay/Server shall store the modified recipient field together with the message for further processing.

The MMS Relay/Server must not use the presentation address for message routeing purposes.

Sender Address

The Sender Address is used only for sender identification to the recipient user provided by the result recipient address, i.e. the presentation of address information in the From: field presented to this recipient.

If the sender address is provided by the MSCF in the MM10 interrogation response then the MMS Relay/Server shall store the modified sender address with the message for further processing.

In order to support delivery and read reply reporting via the MM4 interface, the Sender Address value has to refer to the address of the original sender. MSCF applications may take this into account when setting up values for this attribute. If the addressing service requires presentation of a "not routeable" sender address to the recipient, then delivery and read reply report request should be suppressed.

Full support of delivery and read reply reports in conjunction with the MSCF may be defined in later versions of this specification.

7.1.17.6 Access control

In result of a interrogation request the MSCF may deny the further handling of the Message. In this case the MSCF shall send a MM10 interrogation response with an appropriate result code. Deny of access may be applicable for sending or receiving Messages.

7.1.17.7 Interrogation Request Timeout

If the MSCF does not return an MM10 interrogation response to an MM10 interrogation request the MMS Relay/Server shall process the message according to the setting of the "recovery handling" parameter of the user's profile, i.e. either reject or accept the MM1 submission request.

7.1.17.8 Trigger Information Data in MM10 Interrogation Requests

The MMS user profile, the VASP profile or the address specific trigger criterion may contain an application identification required for the execution of the user specific service on the MSCF. The MMS Relay/Server shall forward this information transparently if available.

7.1.17.9 MSCF Addressing and Routeing

The user profile and the address specific trigger criterion shall contain the MSCF address information. The MMS Relay/Server shall use this information to derive a routeing address to forward the MM10 interrogation request to the MSCF.

7.1.18 Support for transporting Application Data

Apart from using MMS as a service for users to exchange messages, MMS may also be used to transport data specific to applications. Applications that intend to transport application specific data using MMS may either reside on an MMS User Agent or on an MMS VAS Application. Details of these applications or how an MMS User Agent or an MMS VAS Application would interface with them are outside the scope of this specification.

NOTE: Applications that want to transport data specific to applications other than MMS will initially need to register with the appropriate MMS User Agent or MMS VAS Application. During this registration process the application provisions an MMS User Agent or an MMS VAS Application with its application identification value and may negotiate with the MMS User Agent or MMS VAS Application the details (amount and format) of information to be exchanged between the two entities. The application registration process is outside the scope of this specification. The registration may be an inherent process e.g., in the application’s integration into a mobile phone. It may also be the initial step after the download of a downloadable application to a mobile phone. Whatever the details of the application registration process are, an MMS User Agent or an MMS VAS Application acts according to the negotiated results from the application registration process.

Applications that reside on a MMS VAS Application are differentiated from the MMS VAS Application. These applications may trigger the MMS VAS Application as a MMS front-end to transmit or receive information formatted

in MMS abstract messages. Such applications have an additional level of addressing – in addition to the identification of the VASP and the MMS VAS Application.

When MMS is used to transport data specific to applications between two MMS User Agents or an MMS User Agent and an MMS VAS Application (or vice versa) the following exceptions to the normal MMS service behaviour apply:

7.1.18.1 Application Identifiers

The application identifier of the destination application shall be present in an abstract message, while the identifier of a "reply-path" and some additional application/implementation specific control information may be present in an abstract message.

The additional application/implementation specific control information shall be used for all future needs that are not supported by the application identifier of the destination application and the identifier of the originating application, such as specifying a particular logical channel in the application addressing method (e.g., "discussion thread #05") or distinguishing between multiple instances of the same application (e.g., "chess application #02").

The format of the application identifiers' values shall be text string.

In order to guarantee their global uniqueness, application identifiers shall either be specified as MIME types that are registered with IANA (www.iana.org) or shall be composed such that it includes the application developer's URL [72].

NOTE 1: IANA registers both standards-tree and vendor-tree MIME types; thus the use of MIME types guarantees global uniqueness while providing for both standard names and vendor-specific names.

NOTE 2: Including the application developer's URL as part of the application identifier's value guarantees global uniqueness. Details of the syntax are given in clause 8.4.4.8 for MM4, in Annex L for MM7 and in WAP/OMA implementation [82] for MM1 reference points.

7.1.18.2 Applications sending and receiving abstract messages

7.1.18.2.1 Sending abstract messages

Based on the negotiated details upon application registration process an application may trigger an MMS User Agent or an MMS VAS Application to submit certain abstract messages. Upon triggering an MMS User Agent or an MMS VAS Application to send an abstract message the MMS User Agent or MMS VAS Application may receive information from the application. The MMS User Agent or MMS VAS Application may insert this information in both the information elements and/or payload (if present) of the abstract message. The details for the above are according to the results of the application registration process.

Abstract messages that are sent by an MMS User Agent or an MMS VAS Application on behalf of an originating application shall contain a destination application identifier. They may, in addition, contain an application identifier which is to be used in reply-MMs and they may contain additional application/implementation specific control information.

7.1.18.2.2 Receiving abstract messages

If an MMS Relay/Server finds from the recipient MMS User Agent's capability indication (see clause 7.1.3.1) that the recipient MMS User Agent does not support the transport of application data, the MMS Relay/Server

- should delete the content of the MM before notifying the MMS User Agent or before retrieval. In such a case the recipient MMS Relay/Server shall apply the normal reporting behaviour towards receiving as well as sending entities;
- may decide about the deletion of content based on user setting in the user's profile and/or configuration by network operator and/or MMS service provider.

If the MMS Relay/Server finds from the recipient MMS User Agent's capability indication (see clause 7.1.3.1) that the recipient MMS User Agent supports transport of application data, the MMS Relay/Server

- shall not perform any type of content adaptation to a multimedia message (MM) that may be contained in the payload of an abstract message that contains a destination application identifer;

- shall pass on the destination application identifier, the “reply-path” identifier (if present) and the additional application/implementation specific control information (if present) unaltered.

Upon reception of an abstract message containing a destination application identifier (it can either be the MM1_notification.REQ, MM1_retrieve.RES or MM7_deliver.REQ transactions), the receiving MMS User Agent or MMS VAS Application shall first check if the destination application resides on it.

When an MM is addressed to an application, the associated MMS notification, intended for this application, should contain the application identifier.

NOTE: Should the application identifier not be present in the MMS notification this may result in the presentation of the MMS notification to the user.

If the destination application resides on a receiving MMS VAS Application, the MMS VAS Application shall immediately route the received MMS information on to the destination application that is referred to by the destination application identifier (based on the negotiated details upon application registration process).

If the destination application resides on a receiving MMS User Agent, the MMS User Agent shall immediately route the received MMS information on to the destination application that is referred to from the destination application identifier (based on the negotiated details upon application registration process) without presentation to the user.

NOTE: The further handling and processing of the information by the destination application is outside the scope of this specification.

If the destination application does not reside on the receiving MMS User Agent or on the USIM or MMS VAS Application, the MMS User Agent or MMS VAS Application shall discard the corresponding abstract message. In such a case the recipient MMS Relay/Server and recipient MMS User Agent or VAS application shall apply the normal reporting behaviour towards sending entities.

7.1.18.2.3 End User Confirmation

An MMS User Agent may ask for end user confirmation before any submission or retrieval of an MM triggered by an application due to charging, privacy or security reasons.

7.1.19 Cancelling of a Multimedia Message

This part of the MMS service describes the mechanism by which an MMS Relay/Server may request an MMS User Agent, that an MM which the MMS User Agent has already retrieved is to be cancelled. The MMS Relay/Server request shall be invoked by a similar request from a VASP.

The support for cancelling an MM from the recipient MMS User Agent is optional for both MMS User Agent and MMS Relay/Server.

When requesting an MM to be cancelled the MMS Relay/Server shall provide the identification of the MM to be cancelled.

MMS User Agent may provide means (e.g. terminal setting) to a user to forbid such cancellation, requested by the MMS Relay/Server.

The MM cancellation may not be successful as the recipient MMS User Agent may have restricted such a cancellation or the MM is not available any longer. However, upon reception of a request from the MMS Relay/Server to cancel an MM, the MMS User Agent may provide the status (if the request was successfully received) in the response to the MMS Relay/Server.

7.1.20 Deletion of Multimedia Messages on an MMS Relay/Server

This part of the MMS service describes the mechanism by which an MMS User Agent may request the recipient MMS Relay/Server, to delete one or more of its MMs for which retrieval has been deferred.

NOTE: An MM may no longer be available on the recipient MMS Relay/Server after MM retrieval, MM forwarding, or other MMS User Agent actions.

The support for deletion of a deferred MM on an MMS Relay/Server is optional for the MMS User Agent and for the MMS Relay/Server.

If supported the MMS User Agent shall request deletion of a deferred MM based on the Message Reference(s) received in the corresponding notification(s).

Upon reception of a request from the MMS User Agent, the MMS Relay/Server:

- Shall ensure that the deletion request comes from the MMS User Agent associated with the MMs;
- Should free resources associated with these MMs' Message Identification;
- Shall provide status information (per MM, or group of MMs) on the MM deletion request to the MMS User Agent.

7.2 MMSE Addressing responsibilities

Address parsing:

MMS Relay/Server should parse the recipient address field provided by the originator MMS User Agent upon MM submission. If an error is found in the address format, an error indication should be sent back to the MMS User Agent in the submit response.

Locating the recipient:

For each recipient that appears in an MM, the MMS Relay/Server shall be able to resolve whether the recipient belongs to the same MMSE, another MMSE or is not known to belong to any MMSE or the recipient is VASP. If the recipient belongs to the same MMSE, the MMS Relay/Server shall notify the recipient of the new MM as described in clause 7.1.2. If the recipient appears to belong to another MMSE, the MMS Relay/Server has to locate the external recipient's MMSE domain. If the recipient is not known to belong to any MMSE, the MMS Relay/Server shall perform the necessary conversion and route forward the message to the recipient. If the recipient is VASP, the MMS Relay/Server shall deliver MM to the VASP according to the recipient address in MM.

7.2.1 Address Formats on MM1

The MMS addressing model on MM1 contains three addresses: the address of the MMS Relay/Server, the address of the recipient and the address of the originator. The address of the MMS Relay/Server shall be the URI of the MMS Relay/Server given by the MMS service provider. Thus, the URI needs to be configurable in the MMS User Agent.

The originator's a address could be either a user's address or a user's terminal address. The recipient's address can be a user's address, a user's terminal address, or a short code. For this release the user's terminal addresses (e.g. terminal IP addresses) are not supported. The MMS User Agent's responsibility is to format these addresses before it submits the message to the originator MMS Relay/Server.

The user's address can be either an E.164 (MSISDN) or RFC2822 address.

The MMS User Agent and MMS Relay/Server shall support both E.164 (MSISDN) and RFC2822 addressing formats. The reference point MM1 should support a way to indicate the used address type to enable future extension. The encoding of the addressing is up to the corresponding MM1 implementation (cf. Annex B).

E.g. the originator MMS User Agent may specify each of the address fields in one of the following formats:

1) RFC 2822 address (FQDN or unqualified)
2) PLMN address: ["+" | "*" | "#"] [*digit* | *"*"* | *"#"*] … ["/TYPE= PLMN"]
3) Other "/TYPE= "

The "/TYPE= " field specifies the address type. When PLMN format is used the type is optional. The "/TYPE= " convention provides flexibility for future enhancements.

When the "/TYPE=" qualifier is absent, the MMS Relay/Server should resolve potential ambiguities by applying the following logic to the address in the following order:

1. if it contains the "@" character, the address should be interpreted as an FQDN RFC2822 address

2. if it is completely numeric, except possibly including “+”, “*”, or “#”, it should be interpreted as "/TYPE= PLMN", e.g. an E.164 address, a local telephone number, or a numeric short code,

3. otherwise, it should be interpreted as an unqualified RFC2822 address (alphanumeric short code)

7.2.2 Address Formats on MM4

Resolving the recipient's MMSE IP address:

For those recipients that appear in an MM and belong to an external MMSE, the originator MMS Relay/Server has to send the message to each of the recipients’ MMS Relay/Servers using the protocol described in clause 6.6. The MMS Relay/Server has to resolve the recipient's MMS Relay/Server domain name to an IP address, e.g. using DNS, based on the recipient's address. The mapping for the recipient's address, in case of MSISDN (E.164) addressing, to the recipient's MMS Relay/Server if the MM recipient belongs to another MMSE should use the DNS-ENUM protocol [61]. The ENUM solution is described in Annex G. In the absence of an ENUM based solution, it is expected that MMS service providers or network operators may use solutions for their particular needs, which may include static tables or other look-up methods. One such look up method, which is based on MSISDN to IMSI look up, is described in Annex H.

Re-formatting the sender's and recipient's address to FQDN format

When delivering a message from an MMSE to another MMSE, both the sender and the recipient addresses shall be extended to include the FQDN to enable transport over SMTP. This FQDN format shall be used in the MM4 reference point. It is required that FQDN format address is used in "MAIL FROM: " and "RCPT TO: " commands in SMTP, it is not necessary that the originator's and recipient's addresses in [5] "From: " or "To"–fields are re-formatted to FQDN format.

The encoding of FQDN addressing is defined in Clause 8.4.5.1.

7.2.3 Address Formats on MM7

The MMS addressing model on MM7 contains two addresses: The address of the originator MMS User Agent or VAS/VASP and the address(es) of the recipient MMS User Agent(s) or VAS/VASP.

The reference point MM7 shall support E.164 (MSISDN) addresses and e-mail addresses (RFC2822). In addition Short Codes should be supported.

In the case of a multimedia message terminated at the VAS/VASP, the recipient(s)' address(es) may be the VAS/VASP address or the intended recipient(s)’ address and the originator's address shall be user's address (e.g. MSISDN address) or a user's terminal address. For this release the user's terminal addresses (e.g. terminal IP addresses) are not supported.

The MMS Relay/Server shall translate recipient addresses that originate from the MM1 interface into the appropriate URL of the VASP, for example when an MM7_deliver.REQ results from an MM1_submit.REQ from the MMS User Agent. The format of the MM1 address is defined in section 7.2.1 of this specification.

In the case of a multimedia message originated from the VAS/VASP, the originator's address may be the VAS/VASP address and the recipient(s)' address(es) shall be either a user's address or a user's terminal address. For this release the user's terminal addresses (e.g. terminal IP addresses) are not supported.

The VASP's responsibility is to format recipient addresses before it submits the message to the MMS Relay/Server. The recipient user’s address shall be E.164 (MSISDN) address or e-mail address (RFC2822). Additionally, it shall be possible to control which recipient(s) address(es) are utilized for actual routing and which are conveyed as informational only to be displayed to the recipient MMS User Agent.

The VASP will identify itself using one (or more) of three possible identifiers – the VASP identification number, the VAS identification number, or an address MM1 compliant to MM1 address format. The MMS Relay/Server shall translate the identification of the VASP to an appropriate address format for transfer across other reference points, e.g. address as defined in section 7.2.1 for messages sent on MM1.

The reference point MM7 defines also other addressing like information elements: VASP ID, VAS ID and MMS Relay/Server ID. These fields are used only to identify VASP, VAS and MMS Relay/Server and are not used for addressing purpose.

NOTE: The users' addresses referred to above may be replaced by appropriate coded addresses in order not to harm the users' privacy.

8 MMS Application Protocol Framework and Technical Realisation of MMS Service Features

This clause defines the application protocol framework and describes the technical realisation of MMS service features in terms of abstract messages. The abstract messages can be categorised into *transactions* consisting of *requests* and *responses*. The labelling of the MMS abstract messages follows these conventions:

- the transactions between the MMS UA and MMS Relay/Server are prefixed with "MM1";
- the transactions between the MMS Relay/Servers are prefixed with "MM4";
- the transactions between Value-Added Service Providers and the MMS Relay/Server are prefixed with "MM7";
- requests are identified with ".REQ" as a suffix;
- responses are identified with the ".RES" suffix.

Each abstract message carries with it certain information elements, which may vary according to the specific message. All messages shall carry, as information elements, a protocol version and message type, in order that the MMSE components may be able to properly identify and manage the message contents.

Specific information regarding the message encapsulation, including order, possible values, and encoding are beyond the scope of this clause. These details will be defined within each MMSE protocol environment.

The mapping of abstract messages to specific protocols is not necessarily a one-to-one relationship. Depending on the MMS Implementation (WAP etc.), one or more abstract messages may be mapped to a single lower layer PDU, and a single abstract message may be mapped to multiple lower layer PDUs, if the information carried in the PDU(s) serve the purpose of required information in the subjected abstract message(s).

In MM1 responses that provide a status information, the status information returned has no correspondence to the Status information returned in MM4 responses; they are independent of each other.

The MM1 response status, which are limited by design to as small a set of values as possible, may correlate to status and errors occurring within the communications protocols underlying the implementation of the MM4 abstract messages. Similarly, the MM4 status may correlate to those occurring within the communications protocols underlying the implementation of the MM1 abstract messages. The definition of these correlations is out of scope of the present document, and should be provided by the MMS implementations.

The MMS application protocol shall provide means to uniquely identify the version number and message type in each abstract message defined here. The order, possible values and encoding of the information elements for each abstract message are beyond the scope of this clause, and shall be dictated by the protocol environment.

The following figure shows an example abstract message flow when a multimedia message is sent from an originator MMS User Agent to a recipient MMS User Agent. The scope of this figure is limited to abstract messages on reference points MM1 and MM4 only.

Delivery reports are sent by the recipient MMS Relay/Server. Read-reply reports are sent by the recipient MMS User Agent.

Below are Figures 6 and 7. Figure 6 shows a typical transaction for an MMS User Agent submitting an MM addressed to an MMS User Agent serviced by another MMS Relay/Server. Figure 7 shows the abstract messages that may involve the MMBox. These figures are only examples, and do not show all possible transactions between a MMS User Agent and the MMS Relay/Server.

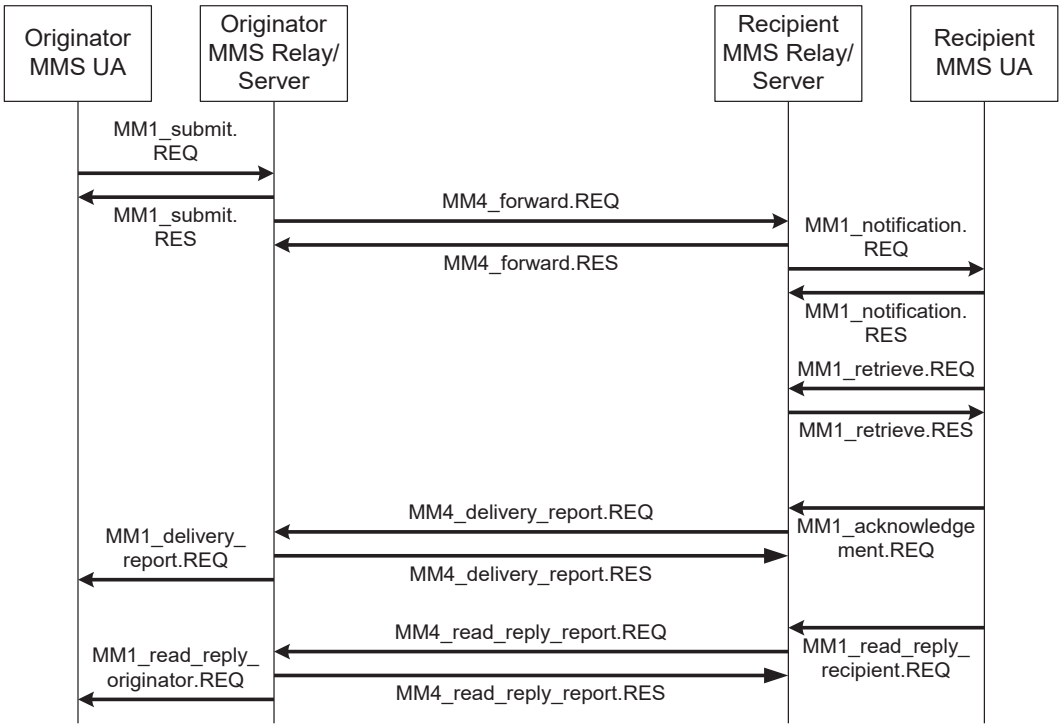

Figure 6: Example Abstract Message Flow

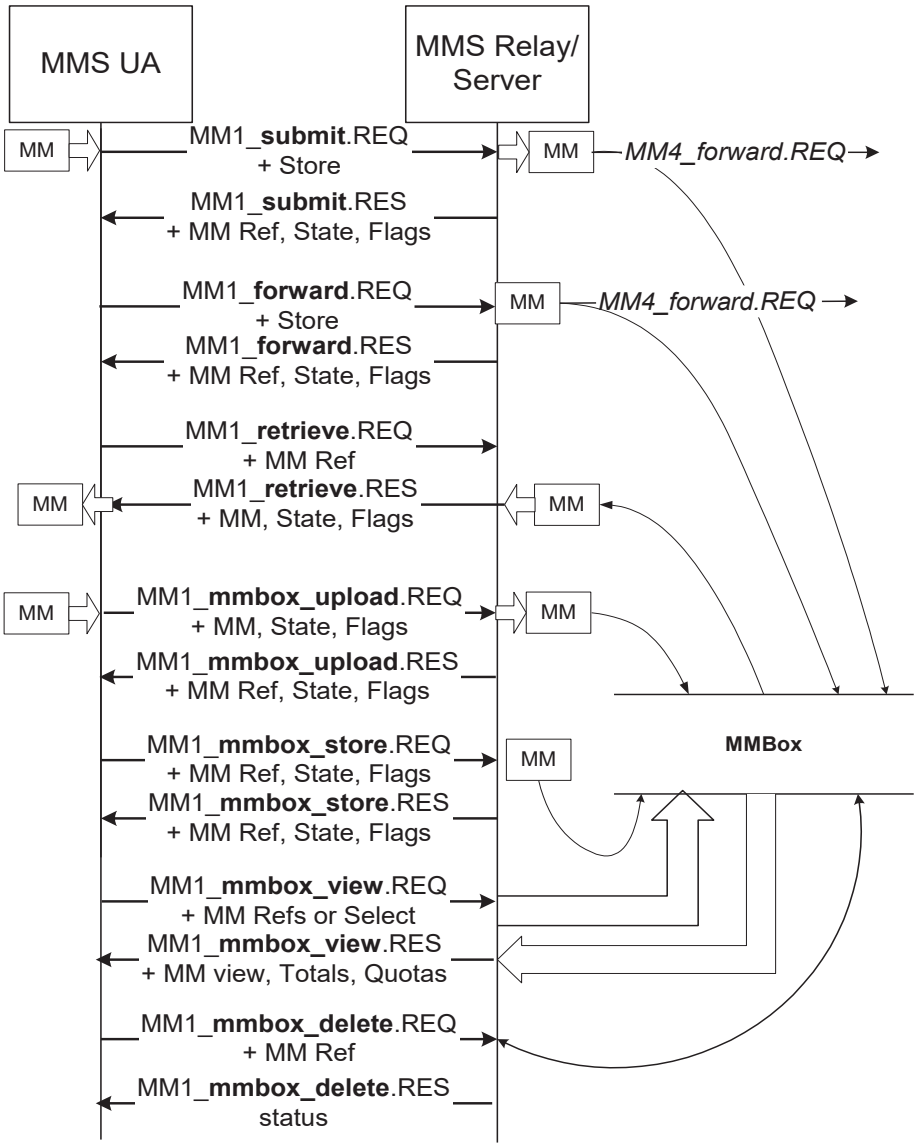

Figure 7: Example Abstract Message Flows with Persistent Storage

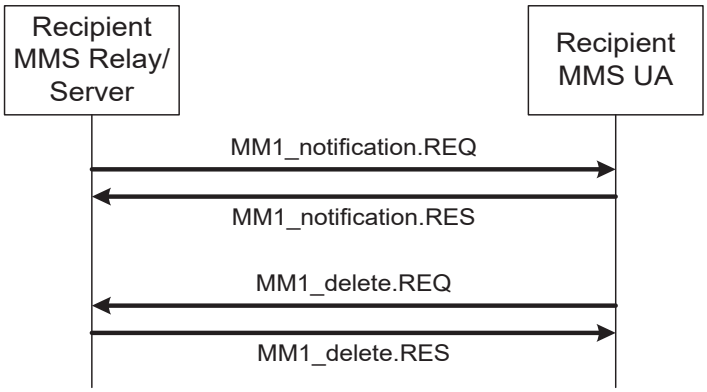

Figure 7A: Example Abstract Message Flow, for deletion of deferred MMs

8.1 Technical realisation of MMS on reference point MM1

Reference point MM1 defines the transactions between the MMS User Agent and the MMS Relay/Server. These transactions include notifications of new MMs, retrieval of MMs, forwarding of MMs, and delivery and read-reply reporting. Figure 6 illustrates some of these transactions and their relationships, in an end-to-end manner.

Additional transactions are specified for MMBox implementations that allow MMs and information about them to be stored, retrieved, changed, and deleted.

8.1.1 Authentication Mechanisms for MM1

On the MM1 reference point an underlying authentication mechanism should be available.

The network-provided MMS User Agent's ID (e.g. MSISDN or IMSI) should be made available to the MMS Relay/Server by the RADIUS mechanisms defined in [54]. This ID should be used to authenticate the MMS User Agent.

8.1.2 Detection of Duplicate MMs

On the MM1 reference point an underlying mechanism for detecting the submission of duplicate MMs should be available.

8.1.3 Submission of Multimedia Message

This part of MMS service covers the submission of an MM. For sending purposes a terminal-originated MM shall always be submitted from the originator MMS User Agent to the corresponding MMS Relay/Server. Involved abstract messages are outlined in the table below from type and direction points of view.

Table 4: Abstract messages for submission of MM in MMS

Abstract messages	Type	Direction
MM1_submit.REQ	Request	MMS UA -> MMS Relay/Server
MM1_submit.RES	Response	MMS Relay/Server -> MMS UA

8.1.3.1 Normal operation

The originator MMS User Agent shall submit a terminal-originated MM to the originator MMS Relay/Server using the MM1_submit.REQ, which contains MMS control information and the MM content. If the Store information element is present, the MM will also be copied to the MMBox, if the MMBox is supported and enabled for the subscriber.

The MMS Relay/Server shall respond with an MM1_submit.RES, which provides the status of the request. The MM1_submit.RES shall unambiguously refer to the corresponding MM1_submit.REQ.

Support for MM1_submit.REQ is optional for the MMS UA, support for MM1_submit.RES is mandatory for the MMS Relay/Server.

8.1.3.2 Abnormal Operation

In this case the originator MMS Relay/Server shall respond with a MM1_submit.RES encapsulating a status which indicates the reason the multimedia message was not accepted, e.g. no subscription, corrupt message structure, service not available, MMBox not supported, MMBox not enabled, MMBox over quota, MMBox system full, MMBox I/O error.

If the MMS Relay/Server does not provide the MM1_submit.RES the MMS User Agent should be able to recover.

8.1.3.3 Features

Addressing: One or several MM recipients of a submitted MM shall be indicated in the addressing-relevant information field(s) of the MM1_submit.REQ. The originator of a submitted MM may be indicated in addressing-relevant information field(s) of the MM1_submit.REQ. The originator MMS User Agent may request to hide its identity from the MM recipient.

Time stamping: The originator MMS User Agent may time stamp the MM.

Time constraints: The originator MMS User Agent may also request an earliest desired time of delivery of the MM. The originator MMS User Agent may request a time of expiry for the MM. In case of reply-charging the originator MMS User Agent may also request a deadline for the latest time of submission of reply-MMs granted to the recipient(s).

Reply-Charging: The originator MMS User Agent may indicate that the sender wants to pay for a reply-MM and convey the reply-charging limitations (e.g. the latest time of submission and/or the maximum size of a reply-MM) in the MM1_submit.REQ.

Message class, priority and subject: The MM may be qualified further by adding a message class, priority and/or subject to the MM in the MM1_submit.REQ. Additional qualifiers may be added.

Reporting: The originator MMS User Agent may request a delivery report for the MM. In addition, the originator MMS User Agent may request a read-reply report when the user has viewed the MM.

Identification: The originator MMS Relay/Server shall always provide a message identification for an MM, which it has accepted for submission in the MM1_submit.RES. In case of reply-charging the MMS User Agent which submits a reply-MM (i.e. the MMS User Agent that received the original MM) shall provide the message ID of the original MM which it replies to in the MM1_submit.REQ.

Persistent storage: In addition to being submitted for normal delivery, the MMS User Agent may request that the submitted MM be stored into the MMBox, by the presence of the Store information element. As part of the store request, the MM State and MM Flags can be set with the use of corresponding information elements. The response to a Store request shall include a Message Reference to the newly stored MM, as well as the associated MM State and optional MM Flags.

Store Status: The MMS Relay/Server shall indicate the store status of the MM1_submit.REQ in the Store Status information element of the associated MM1_submit.RES. The Store Status information element of the MM1_submit.RES may be supported with an explanatory text. If this text is available in the Store Status Text information element the MMS User Agent should bring it to the user's attention. The choice of the language used in the Store Status Text information element is at the discretion of the MMS service provider

Content Type: The MIME type of the multimedia content shall always be identified in the MM1_submit.REQ.

Content: The originator MMS User Agent may add content in the MM1_submit.REQ.

Request Status: The originator MMS Relay/Server shall indicate the status of the MM1_submit.REQ in the associated MM1_submit.RES. The reason code given in the status information element of the MM1_submit.RES may be supported with an explanatory text further qualifying the status. If this text is available in the Request status text information element the MMS User Agent should bring it to the user's attention. The choice of the language used in the Request status text information element is at the discretion of the MMS service provider.

Transaction Identification: The originator MMS User Agent shall provide an unambiguous transaction identification within a request. The response shall unambiguously refer to the corresponding request using the same transaction identification.

Version: The MMS protocol shall provide unique means to identify the current version of the particular protocol environment.

Message Type: The type of the message used on the reference point MM1 indicating MM1_submit.REQ and MM1_submit.RES as such.

Applic-ID: The presence of this information element indicates that this abstract message shall be provided to an application residing on an MMS User Agent or MMS VAS Application. It contains the identification of the destination application.

Reply-Applic-ID: If present, this information element indicates a “reply path” , i.e. the identifier of the application to which delivery reports, read-reply reports and reply-MMs are addressed if any.

Aux-Applic-Info: If present, t his information element indicates additional application/implementation specific control information (cf. 7.1.18.1).

Content adaptation restriction: The originator may request that the content of the MM will not be subjected to content adaptation.

Content Information: The originator may provide information about the nature of the content in the message. The content information could be in terms of indications that:

- classifies content of the MM based on e.g. media types/formats, size, presentation formats [85]
- the MM contains DRM-protected content

In case of conflict with the adaptation restriction provided by the originator, DRM-protection rules in content adaptation shall prevail over the adaptation restriction.

8.1.3.4 Information Elements

Table 5: Information elements in the MM1_submit.REQ.

Information element	Presence	Description
Message Type	Mandatory	Identifies this message as MM1_submit.REQ
Transaction ID	Mandatory	The identification of the MM1_submit.REQ/MM1_submit.RES pair.
MMS Version	Mandatory	Identifies the version of the interface supported by the MMS UA.
Recipient address	Mandatory	The address of the recipient(s) of the MM. Multiple addresses are possible.
Content type	Mandatory	The content type of the MM's content.
Sender address	Optional	The address of the MM originator.
Message class	Optional	The class of the MM (e.g., personal, advertisement, information service)
Date and time	Optional	The time and date of the submission of the MM (time stamp).
Time of Expiry	Optional	The desired time of expiry for the MM or reply-MM (time stamp).
Earliest delivery time	Optional	The earliest desired time of delivery of the MM to the recipient (time stamp).
Delivery report	Optional	A request for delivery report.
Reply-Charging	Optional	A request for reply-charging.
Reply-Deadline	Optional	In case of reply-charging the latest time of submission of replies granted to the recipient(s) (time stamp).
Reply-Charging-Size	Optional	In case of reply-charging the maximum size for reply-MM(s) granted to the recipient(s).
Priority	Optional	The priority (importance) of the message.
Sender visibility	Optional	A request to show or hide the sender's identity when the message is delivered to the recipient.
Store	Optional	A request to store a copy of the MM into the user's MMBox, in addition to the normal delivery of the MM.
MM State	Optional	The value to set in the MM State information element of the stored MM, if Store is present.
MM Flags	Optional	One or more MM Flag keywords to set in the MM Flags information element of the stored MM, if Store is present
Read reply	Optional	A request for read reply report.
Subject	Optional	The title of the whole multimedia message.
Reply-Charging-ID	Optional	In case of reply-charging when the reply-MM is submitted within the MM1_submit.REQ this is the identification of the original MM that is replied to.
Applic-ID	Optional	Identification of the destination application.
Reply-Applic-ID	Optional	Identification of an application to which reply-MMs, delivery reports and read-reply reports are addressed.
Aux-Applic-Info	Optional	Auxiliary application addressing information.
Content Class	Optional	Classifies the content of the MM to the smallest content class to which the MM belongs [85].
DRM Content	Optional	Indicates if the MM contains DRM-protected content
Adaptations	Optional	Indicates if the originator allows adaptation of the content (default True)
Content	Optional	The content of the multimedia message

Table 6: Information elements in the MM1_submit.RES.

Information element	Presence	Description
Message Type	Mandatory	Identifies this message as MM1_submit.RES.
Transaction ID	Mandatory	The identification of the MM1_submit.REQ/MM1_submit.RES pair.
MMS Version	Mandatory	Identifies the version of the interface supported by the MMS Relay/Server.
Request Status	Mandatory	The status of the MM submit request.
Request Status Text	Optional	Description which qualifies the status of the MM submit request.
Message ID	Conditional	The identification of the MM if it is accepted by the originator MMS Relay/Server.
Store Status	Conditional	If the Store request was present in MM1_submit.REQ, the status of the store request.
Store Status Text	Optional	The explanatory text corresponding to the Store Status, if present.
Stored Message Reference	Conditional	If the Store request was present in MM1_submit.REQ, the message reference to the newly stored MM.

8.1.4 Multimedia Message Notification

This part of the MMS service covers the notification about MM from the recipient MMS Relay/Server to the corresponding recipient MMS User Agent and involving abstract messages are outlined in the table below from type, and direction points of view.

Table 7: abstract messages for notification of MM in MMS

Abstract message	Type	Direction
MM1_notification.REQ	Request	MMS Relay/Server -> MMS UA
MM1_notification.RES	Response	MMS UA -> MMS Relay/Server

8.1.4.1 Normal Operation

Upon receiving the MM1_notification.REQ, the recipient MMS User Agent shall respond with the MM1_notification.RES to the recipient MMS Relay/Server to acknowledge the successful reception of the MM1_notification.REQ.

The MM1_notification.RES shall unambiguously refer to the corresponding MM1_notification.REQ.

8.1.4.2 Abnormal Operation

In this case the MMS UA shall respond with a MM1_notification.RES encapsulating a status which indicates the reason the notification could not be processed. If the MMS UA does not provide the MM1_notification.RES the MMS Relay/Server should be able to retransmit the notification at a later state.

8.1.4.3 Features

Addressing: The MM originator address may be provided to the recipient MMS User Agent in the MM1_notification.REQ. The MM originator address shall not be provided to the recipient MMS User Agent if the MM originator has requested her address to be hidden from the MM recipient. In the case of forwarding, the address of the latest forwarding MMS User Agent shall be provided.

Time constraints: The recipient MMS User Agent shall be provided a time of expiry of the MM. In case of reply-charging the deadline for the latest time of submission of a reply-MM should be conveyed within the MM1_notification.REQ.

Reply-Charging: In case of reply-charging the MMS Relay/Server may indicate in the MM1_notification.REQ that a reply to the notified original MM is free of charge and the reply-charging limitations.

Message class, message size, priority and subject: The MM shall be qualified further by adding a message class and an approximate size to the MM in the MM1_notification.REQ. The MM may be qualified further by adding a priority and/or subject to the MM. Additional qualifiers may be added.

Reporting: If the originator MMS User Agent has requested to have a delivery report, the recipient MMS Relay/Server may convey this information to the recipient MMS User Agent in the MM1_notification.REQ. The recipient MMS User Agent may indicate in the MM1_notification.RES that it would not wish a delivery report to be created.

Identification: In case of reply-charging when a reply-MM is notified within the MM1_notification.REQ the MMS Relay/Server should convey the identification of the original MM replied to within the same MM1_notification.REQ.

Persistent storage: When the MMBox is configured such that incoming MMs are stored automatically, the MM1_notification.REQ shall contain the Stored information element.

Message Reference: The recipient MMS Relay/Server shall always provide a reference, e.g., URI, for the MM in the MM1_notification.REQ. When incoming MMs are stored automatically, the Message Reference will refer to the newly stored MM within the MMBox.

MM Status: The recipient MMS User Agent may indicate in the MM1_notification.RES how it intends the MM to be handled, e.g. the immediate rejection of the MM.

MM element descriptor: The recipient MMS Relay/Server may provide one or more description(s) of message elements in the MM1_notification.REQ. A description shall contain a reference to the message element, e.g. a URI, an index number etc.. A description of a message element may be further qualified by adding one or more of such parameters as:

- name of the message element
- type and format of the message element
- approximate size of the message element

Message Distribution Indication: The VASP may indicate whether the content of the MM is intended for redistribution.

NOTE: From REL-6 onwards, in case of misalignment, DRM-protection rules shall prevail over the Message Distribution Indication feature.

Transaction Identification: The originator MMS Relay/Server shall provide an unambiguous transaction identification within a request. The response shall unambiguously refer to the corresponding request using the same transaction identification.

Version: The MMS protocol shall provide unique means to identify the current version of the particular protocol environment.

Message Type: The type of the message used on the reference point MM1 indicating MM1_notification.REQ and MM1_notification.RES as such.

MM recommended retrieval mode: the MMS Relay/Server may include an indication about the recommended manual retrieval mode of the MM. This indication code may be supported with an explanatory text (e.g. indication about charging related information if recipient has to pay for the retrieval or roaming condition) further expliciting why the manual retrieval mode is recommended for the MM.

Applic-ID: This information element contains the identification of the destination application. Upon reception, the recipient MMS User Agent shall provide this MM1_notification.REQ to the specified destination application.

Reply-Applic-ID: If present, this information element may be used by the originating application to indicate a “reply path” to the destination application residing on the receiving MMS User Agent or MMS VAS Application. It contains the application identifier which shall be used by the recipient MMS User Agent when a reply-MM or a read-reply report is created.

Aux-Applic-Info: If present, this information element indicates additional application/implementation specific control information (cf. 7.1.18.1).

Content Information: The MMS Relay/Server may provide information about the nature of the content in the message. The content information could be in terms of indications that:

- classifies content of the MM based on e.g. media types/formats, size, presentation formats [85]
- the MM contains DRM-protected content

Replace identification: If requested by a VASP in MM7_extended_replace.REQ, the MMS Relay/Server shall provide identification of a previous MM, which is replaced by the MM associated with the notification.

8.1.4.4 Information Elements

Table 8: Information elements in the MM1_notification.REQ.

Information element	Presence	Description
Message Type	Mandatory	Identifies this message as MM1_notification.REQ
Transaction ID	Mandatory	The identification of the MM1_notification.REQ/MM1_notification.RES pair.
MMS Version	Mandatory	Identifies the version of the interface supported by the MMS Relay/Server.
Message class	Mandatory	The class of the MM (e.g., personal, advertisement, information service; default = personal)
Message size	Mandatory	The approximate size of the MM
Time of expiry	Mandatory	The time of expiry for the MM (time stamp).
Message Reference	Mandatory	a reference, e.g., URI, for the MM
Subject	Optional	The title of the whole MM; may be truncated by the MMS Relay/Server.
Priority	Optional	The priority (importance) of the message.
Sender address	Conditional	The address of the MMS User Agent that most recently handled the MM, i.e. that either submitted or forwarded the MM. If the originator MMS User Agent has requested her address to be hidden from the recipient her address shall not be provided to the recipient.
Stored	Optional	Indicates that the MM was automatically stored into the MMBox.
Delivery report	Optional	Request for delivery report
Reply-Charging	Optional	Information that a reply to this particular original MM is free of charge.
Reply-Deadline	Optional	In case of reply-charging the latest time of submission of a reply granted to the recipient (time stamp).
Reply-Charging-Size	Optional	In case of reply-charging the maximum size of a reply-MM granted to the recipient.
Reply-Charging-ID	Optional	The identification of the original MM replied to if this notification indicates a reply-MM.
Element-Descriptor	Optional	The reference for an element of the MM, which may contain further information about the referenced element of the MM, e.g. the name, the size and/or the type and format of the message element
MM recommended retrieval mode	Optional	Indication that manual retrieval mode is recommended for this MM
Text explaining MM recommended retrieval mode	Optional	Description that explicits why the manual retrieval mode is recommended for the MM.
Message Distribution Indicator	Optional	If set to “false” the VASP has indicated that content of the MM is not intended for redistribution. If set to “true” the VASP has indicated that content of the MM can be redistributed (NOTE).
Applic-ID	Optional	Identification of the destination application.
Reply-Applic-ID	Optional	Identification of an application to which reply-MMs and read-reply reports are addressed.
Aux-Applic-Info	Optional	Auxiliary application addressing information.
Content Class	Optional	Classifies the content of the MM to the smallest content class to which the MM belongs [85]
DRM Content	Optional	Indicates if the MM contains DRM-protected content
Replace-ID	Conditional	Identifier of the previous MM that is replaced by the current MM, if requested by a VASP
NOTE: From REL-6 onwards, in case of misalignment between the value assigned to MDI and DRM-protection rules, the latter shall prevail.		

Table 9: Information elements in the MM1_notification.RES.

Information element	Presence	Description
Message Type	Mandatory	Identifies this message as MM1_notification.RES.
Transaction ID	Mandatory	The identification of the MM1_notification.REQ/MM1_notification.RES pair.
MMS Version	Mandatory	Identifies the version of the interface supported by the MMS User Agent.
MM Status	Optional	The status of the MM's retrieval
Report allowed	Optional	Request to allow or disallow the sending of a delivery report to the MM originator

8.1.5 Retrieval of Multimedia Message

This part of MMS service covers the retrieval of an MM. For retrieval purposes an MM shall always be retrieved by the recipient MMS User Agent from the recipient MMS Relay/Server. Involved abstract messages are outlined in the table below from type and direction points of view.

Table 10: Abstract messages for retrieval of MM in MMS

Abstract messages	Type	Direction
MM1_retrieve.REQ	Request	MMS UA -> MMS Relay/Server
MM1_retrieve.RES	Response	MMS Relay/Server -> MMS UA
MM1_acknowledgement.REQ	Request	MMS UA -> MMS Relay/Server

8.1.5.1 Normal Operation

The recipient MMS User Agent shall issue an MM1_retrieve.REQ to the recipient MMS Relay/Server to initiate the retrieval process. The MMS Relay/Server shall respond with an MM1_retrieve.RES, which contains MMs control information and the MM content.

After receiving the MM1_retrieve.RES, the recipient MMS User Agent shall send an MM1_acknowledgement.REQ to the corresponding MMS Relay/Server, if requested by the MMS Relay/Server. The MM1_acknowledgement.REQ shall unambiguously refer to the corresponding MM1_retrieve.RES.

8.1.5.2 Abnormal Operation

If the recipient MMS Relay/Server can not process the MM1_retrieve.REQ, for example due to invalid content location or expiration of the message, the recipient MMS Relay/Server shall respond with either an MM1_retrieve.RES or a lower protocol layer error message encapsulating a status which indicates the reason to the MMS User Agent the multimedia message was not delivered.

If the MMS Relay/Server does not provide the MM1_retrieve.RES or the lower protocol layer error message the MMS User Agent should be able to recover.

8.1.5.3 Features

Message Reference: The recipient MMS User Agent shall provide a reference, e.g., URI, for the MM in the MM1_retrieve.REQ.

This reference was previously delivered to the MMS User Agent from MM1_notification.REQ, MM1_submit.RES, MM1_forward.RES, MM1_mmbox_view.RES, MM1_mmbox_upload.RES, or MM1_mmbox_store.RES. In the latter cases, the Message Reference will address an MM that resides in the MMBox.

Addressing: The MM originator address may be provided to the recipient MMS User Agent in the addressing-relevant information field of MM1_retrieve.RES. The MM originator address shall not be provided to the recipient MMS User Agent if the MM originator has requested her address to be hidden from the MM recipient. In the case of forwarding, the address of the latest forwarding MMS User agent shall be provided and the address(es) of the previous forwarding MMS User Agent(s) and the address of the originator MMS User Agent may be provided. One or several address(es) of

the MM recipient(s) may be provided to the recipient MMS User Agent in the addressing-relevant information field(s) of the MM1_retrieve.RES.

Time stamping: The MM1_retrieve.RES shall carry the time and date of the most recent handling of the MM by an MMS User Agent (i.e. either submission or the most recent forwarding of the MM). In the case of forwarding, the MM1_retrieve.RES may in addition carry the time and date of the submission of the MM.

Time constraints: In case of reply-charging the deadline for the latest time of submission of a reply-MM shall be conveyed within the MM1_retrieve.RES.

Message class, priority and subject: Information about class, priority, subject of the MM shall be included in the MM1_retrieve.RES according to their presence and value received at the MMS Relay/Server. Information about additional end-to-end qualifiers of the MM should be included in the MM1_retrieve.RES according to their presence and value received at the MMS Relay/Server.

Reporting: If the originator MMS User Agent has requested to have a read-reply report, the recipient MMS Relay/Server shall convey this information in the MM1_retrieve.RES. If the originator MMS User Agent has requested to have a delivery report, the recipient MMS Relay/Server may convey this information to the recipient MMS User Agent in the MM1_retrieve.RES.

If a request for a delivery report is included in the MM1_retrieve.RES the recipient MMS User Agent shall convey the information whether it accepts or denies the sending of a delivery report to the MM originator in MM1_acknowledgement.REQ.

If a delivery report is not requested, it is up to the recipient MMS User Agent to include this information in MM1_acknowledgement.REQ or not.

Reply-Charging: In case of reply-charging the MMS Relay/Server should indicate in the MM1_retrieve.RES that a reply to this particular original MM is free of charge and the reply-charging limitations.

Identification: The MMS Relay/Server shall provide a message identification for a message, which it has accepted for delivery in the MM1_retrieve.RES. In case of reply-charging the MMS Relay/Server shall provide the message ID of the original MM which is replied to in the MM1_retrieve.RES.

Persistent storage: In the MM1_retrieve.RES, the MMS Relay/Server shall convey the MM State and/or MM Flags information elements if they have been previously set for the persistently stored MM.

Content Type: The type of the MM's content shall always be identified in the MM1_retrieve.RES.

Content: The content of the multimedia message if added by the originator MMS User Agent of the MM may be conveyed in the MM1_retrieve.RES.

Request Status: In case of normal operation the recipient MMS Relay/Server may indicate in the MM1_retrieve.RES that the retrieval of the MM was processed correctly. In case of abnormal operation the recipient MMS Relay/Server shall indicate in the MM1_retrieve.RES the reason why the multimedia message could not be retrieved. The corresponding reason codes should cover application level errors (e.g. "the media format could not be converted", "insufficient credit for retrieval"). Lower layer errors may be handled by corresponding protocols.

The reason code given in the status information element of the MM1_retrieve.RES may be supported with an explanatory text further qualifying the status. If this text is available in the Request status text information element the MMS User Agent should bring it to the user's attention. The choice of the language used in the Request status text information element is at the discretion of the MMS service provider.

Previously-sent-by: The address(es) of the MMS User Agent(s) that submitted or forwarded the MM prior to the last forwarding MMS User Agent. In the multiple forwarding case the order of the provided addresses shall be indicated and the address of the originator MMS User Agent shall be indicated, if present.

NOTE: The address of the last forwarding MMS User Agent is carried in other addressing elements.

Message Distribution Indication: The VASP may indicate whether the content of the MM is intended for redistribution.

NOTE: From REL-6 onwards, in case of misalignment, DRM-protection rules shall prevail over the Message Distribution Indication feature.

Transaction Identification: The originator MMS User Agent shall provide unambiguous transaction identification within a request. The response shall unambiguously refer to the corresponding request using the same transaction identification.

Version: The MMS protocol shall provide unique means to identify the current version of the particular protocol environment.

Message Type: The type of the message used on the reference point MM1 indicating MM1_retrieve.RES and MM1_acknowledgement.REQ as such.

Applic-ID: This information element contains the identification of the destination application. Upon reception, the recipient MMS User Agent shall provide this MM1_retrieve.RES to the specified destination application.

Reply-Applic-ID: If present, this information indicates a "reply path". It contains the application identifier which shall be used by the recipient MMS User Agent when a reply-MM or a read-reply report is created.

Aux-Applic-Info: If present, this information element indicates additional application/implementation specific control information (cf. 7.1.18.1)

Content Information: The MMS Relay/Server may provide information about the nature of the content in the message. The content information could be in terms of indications that:

- classifies content of the MM based on e.g. media types/formats, size, presentation formats [85]
- the MM contains DRM-protected content

Replace identification: If requested by a VASP in MM7_extended_replace.REQ, the MMS Relay/Server shall provide identification of a previous MM, which is replaced by the MM in the MM1_retrieve.RES..

8.1.5.4 Information Elements

Table 11: Information elements in the MM1_retrieve.REQ

Information element	Presence	Description
Message Reference	Mandatory	Location of the content of the MM to be retrieved.

Table 12: Information elements in the MM1_retrieve.RES

Information element	Presence	Description
Message Type	Mandatory	Identifies this message as MM1_retrieve.RES.
Transaction ID	Conditional	If the MMS Relay/Server requests an acknowledgement from the recipient MMS User Agent then the Transaction ID shall be present. It then identifies the MM1_retrieve.RES/MM1_acknowledgement.REQ messages.
MMS Version	Mandatory	Identifies the version of the interface supported by the MMS Relay/Server.
Message ID	Conditional	The message ID of the MM. Condition: this information element shall be present when the MM1_retrieve.RES contains the requested MM content.
Sender address	Conditional	The address of the MMS User Agent that most recently handled the MM, i.e. that either submitted or forwarded the MM. If the originator MMS User Agent has requested her address to be hidden from the recipient her address shall not be provided to the recipient.
Content type	Mandatory	The content type of the MM's content.
Recipient address	Optional	The address of the MM recipient. Multiple addresses are possible.
Message class	Optional	The class of the message (e.g., personal, advertisement, information service)
Date and time	Mandatory	The time and date of the most recent handling (i.e. either submission or forwarding) of the MM by an MMS User Agent (time stamp).
Delivery report	Conditional	A request for delivery report if a delivery report has been requested by the originator MMS User Agent.
Priority	Conditional	The priority (importance) of the message if specified by the originator MMS User Agent..
Read reply	Conditional	A request for read-reply report if the originator MMS User Agent of the MM has requested a read-reply report.
Subject	Conditional	The title of the whole multimedia message if specified by the originator MMS User Agent of the MM.
MM State	Conditional	The MM State. May be absent for incoming MMs; shall be present for persistently stored MMs
MM Flags	Optional	Present only for persistently stored MMs. One or more keyword flags, which shall be present if they have been previously set for the MM.
Request Status	Optional	The status of the MM retrieve request.
Request Status Text	Optional	Description which qualifies the status of the MM retrieve request.
Reply-Charging	Optional	Information that a reply to this particular original MM is free of charge.
Reply-Charging-ID	Optional	In case of reply-charging this is the identification of the original MM replied to.
Reply-Deadline	Optional	In case of reply-charging the latest time of submission of a reply granted to the recipient (time stamp).
Reply-Charging-Size	Optional	In case of reply-charging the maximum size of a reply-MM granted to the recipient.
Previously-sent-by	Optional	In case of forwarding this information element contains one or more address(es) of MMS User Agent(s) that handled (i.e. forwarded or submitted) the MM prior to the MMS User Agent whose address is contained in the Sender address information element. The order of the addresses provided shall be marked. The address of the originator MMS User Agent shall be marked, if present.
Previously-sent-date-and-time	Optional	The date(s) and time(s) associated with submission and forwarding event(s) prior to the last handling of the MM by an MMS User Agent (time stamp).
Message Distribution Indicator	Optional	If set to "false" the VASP has indicated that content of the MM is not intended for redistribution. If set to "true" the VASP has indicated that content of the MM can be redistributed. (NOTE)
Applic-ID	Optional	Identification of the destination application.
Reply-Applic-ID	Optional	Identification of an application to which reply-MMs and read-reply reports are addressed.

Aux-Applic-Info	Optional	Auxiliary application addressing information.
Content Class	Optional	Classifies the content of the MM to the smallest content class to which the MM belongs [85].
DRM Content	Optional	Indicates if the MM contains DRM-protected content
Replace-ID	Conditional	Identifier of the previous MM that is replaced by the current MM, if requested by a VASP.
Content	Conditional	The content of the multimedia message if specified by the originator MMS User Agent of the MM.
NOTE: From REL-6 onwards, in case of misalignment between the value assigned to MDI and DRM-protection rules, the latter shall prevail.		

Table 13: Information elements in the MM1_acknowledgement.REQ

Information element	Presence	Description
Message Type	Mandatory	Identifies this message as MM1_acknowledgment.REQ.
Transaction ID	Conditional	If an acknowledgement is requested by the MMS Relay/Server then the Transaction ID shall be present. It then identifies the MM1_retrieve.RES/MM1_acknowledgement.REQ messages.
MMS Version	Mandatory	Identifies the version of the interface supported by the MMS User Agent.
Report allowed	Optional	Request to allow or disallow the sending of a delivery report to the MM originator

8.1.6 Forwarding of Multimedia Message

This part of the MMS service describes the mechanism by which a forwarding MMS User Agent can request from the corresponding MMS Relay/Server, that an MM for which the MMS User Agent is the intended recipient (and has been notified of the MM) be forwarded to other specified recipient(s) MMS User Agent(s) whose address(es) shall be specified by the forwarding MMS User Agent, without having to first retrieve the MM. If the MMBox is supported, the MM being forwarded may also be requested to be stored in to the originator's MMBox.

For forwarding purposes an MM forward request shall always be requested by the forwarding MMS User Agent of the forwarding MMS Relay/Server. Involved abstract messages are outlined in the table below from type and direction points of view.

Table 14: Abstract messages for forwarding of MM

Abstract messages	Type	Direction
MM1_forward.REQ	Request	MMS UA -> MMS Relay/Server
MM1_forward.RES	Response	MMS Relay/Server -> MMS UA

8.1.6.1 Normal operation

The forwarding MMS User Agent shall issue an MM1_forward.REQ to the forwarding MMS Relay/Server, which contains MMS control information. The MMS Relay/Server shall respond with an MM1_forward.RES, which provides the status of the request.

The MM1_forward.RES shall unambiguously refer to the corresponding MM1_forward.REQ.

Support for MM1_forward.REQ and MM1_forward.RES is mandatory for the MMS Relay/Server that also supports MMBoxes. Otherwise, support for MM1_forward.REQ is optional for the MMS User Agent, and support for MM1_forward.REQ is optional for the MMS Relay/Server..

8.1.6.2 Abnormal Operation

In this case the MMS Relay/Server shall respond with an MM1_forward.RES encapsulating a status which indicates the reason the request for forwarding was not accepted, e.g. no subscription, service not available, invalid content location, message expired, MMBoxes not supported, MMBox not enabled, MMBox over quota, MMBox system full, MMBox I/O error.

When MM1_forward.REQ contains a Store request, the MMS Relay/Server shall provide the results of the store operation in the MM1_forward.RES. If the MMS Relay/Server does not provide the MM1_forward.RES the MMS User Agent should be able to recover.

8.1.6.3 Features

Addressing: One or several recipients of an MM forward request shall be indicated in the addressing-relevant information field(s) of the MM1_forward.REQ. The forwarding MMS User Agent may be indicated in addressing-relevant information field(s) of the MM1_forward.REQ.

Time stamping: The forwarding MMS User Agent may time stamp the MM.

Time constraints: The forwarding MMS User Agent may request an earliest desired time of delivery of the MM. The forwarding MMS User Agent may request a time of expiry for the MM.

Reporting: The forwarding MMS User Agent may request a delivery report for the MM. In addition, the forwarding MMS User Agent may request a read-reply report when the user has viewed the MM.

Reply-Charging: The forwarding MMS User Agent may indicate it wants to pay for a reply-MM and convey the reply-charging limitations (e.g. the latest time of submission and/or the maximum size of a reply-MM) in the MM1_forward.REQ. In this case, forwarding MMS User Agent behaves as the originator MMS User Agent to support reply-charging function. The fowarding MMS User Agent shall not be allowed to forward the reply-charging information set by the originator MMS User Agent.

Identification: The MMS Relay/Server of the forwarding MMS User Agent shall always provide a message identification for an MM forward request, which it has accepted for being forwarded in the MM1_forward.RES.

Persistent storage: If MMBoxes are supported, the presence of the Store information element in MM1_forward.REQ is a request to have a copy of the message being forwarded stored persistently within the forwarder's MMBox. The MM State and/or MM Flags values of the stored MM may be set with the values from the corresponding information elements.

Store Status: The MMS Relay/Server shall indicate the store status of the MM1_forward.REQ in the Store Status information element of the associated MM1_forward.RES. The Store Status information element of the MM1_forward.RES may be supported with an explanatory text. If this text is available in the Store Status Text information element the MMS User Agent should bring it to the user's attention. The choice of the language used in the Store Status Text information element is at the discretion of the MMS service provider

Message Reference: The forwarding MMS User Agent shall always provide the reference, e.g., URI, for the MM in the MM1_forward.REQ which was provided in MM1_notification.REQ.

Request Status: The MMS Relay/Server of the forwarding MMS User Agent shall indicate the status of the MM1_forward.REQ in the MM1_forward.RES. The reason code given in the status information element of the MM1_forward.RES may be supported with an explanatory text further qualifying the status. If this text is available in the Request status text information element the MMS User Agent should bring it to the user's attention. The choice of the language used in the Request status text information element is at the discretion of the MMS service provider.

Transaction Identification: The forwarding MMS User Agent shall provide unambiguous transaction identification within a request. The response shall unambiguously refer to the corresponding request using the same transaction identification.

Version: The MMS protocol shall provide unique means to identify the current version of the particular protocol environment.

Message Type: The type of the message used on the reference point MM1 indicating MM1_forward.REQ and MM1_forward.RES as such.

8.1.6.4 Information Elements

Table 15: Information elements in the MM1_forward.REQ.

Information element	Presence	Description
Message Type	Mandatory	Identifies this message as MM1_forward.REQ.
Transaction ID	Mandatory	The identification of the MM1_forward.REQ/MM1_forward.RES pair.
MMS Version	Mandatory	Identifies the version of the interface supported by the forwarding MMS User Agent.
Recipient address	Mandatory	The address of the recipient of the forwarded MM. Multiple addresses are possible.
Forwarding address	Optional	The address of the forwarding MMS User Agent.
Date and time	Optional	The time and date of the forwarding of the MM (time stamp).
Time of Expiry	Optional	The desired time of expiry for the forwarded MM (time stamp).
Earliest delivery time	Optional	The earliest desired time of delivery of the MM to the recipient (time stamp).
Store	Optional	If MMBoxes are supported, the presence of the Store information element in MM1_forward.REQ causes a copy of the MM being forwarded to be stored in the user's MMBox, unless the Message Reference is to an MM already in the MMBox.
MM State	Optional	The value to set in the MM State information element of the stored MM, if Store is present.
MM Flags	Optional	One or more MM Flag keywords to set in the MM Flags information element of the stored MM, if Store is present
Delivery report	Optional	A request for delivery report for the forwarded MM.
Read reply	Optional	A request for read reply report.
Reply-Charging	Optional	A request for reply-charging from the forwarding MMS User Agent which indicate the forwarding user's willingness to pay for the reply-MM from the recipient.
Reply-Deadline	Optional	In case of reply-charging the latest time of submission of replies granted to the recipient(s) (time stamp).
Reply-Charging-Size	Optional	In case of reply-charging the maximum size for reply-MM(s) granted to the recipient(s).
Message Reference	Mandatory	A reference, e.g., URI, for the MM being forwarded. This may either be the Message Reference from MM1_notification.REQ, MM1_mmbox_store.REQ, or MM1_mmbox_view.REQ.

Table 16: Information elements in the MM1_forward.RES.

Information element	Presence	Description
Message Type	Mandatory	Identifies this message as MM1_forward.RES.
Transaction ID	Mandatory	The identification of the MM1_forward.REQ/MM1_forward.RES pair.
MMS Version	Mandatory	Identifies the version of the interface supported by the MMS Relay/Server.
Request Status	Mandatory	The status of the MM Forward request.
Request Status Text	Optional	Description which qualifies the status of the MM Forward request.
Message ID	Mandatory	The unique identification of the forwarded MM.
Store status	Conditional	The status of the store request, if the Store request was present in MM1_forward.REQ.
Store Status Text	Optional	The explanatory text corresponding to the Store status, if present.
Stored Message Reference	Conditional	The message reference to the newly stored copy of the forwarded MM, if the Store request was present in MM1_forward.REQ and the store operation was successful.

8.1.7 Delivery Report

This part of MMS service covers the sending of delivery report from originator MMS Relay/Server to the originator MMS User Agent. The involved abstract message is outlined in the table below from type and direction points of view.

Table 17: abstract message for sending delivery reports in MMS

Abstract Message	Type	Direction
MM1_delivery_report.REQ	Request	MMS Relay/Server -> MMS UA

8.1.7.1 Normal Operation

The originator MMS Relay/Server shall (subject to user, MMS service provider and/or operator preferences) create the MM1_delivery_report.REQ and send it to the originator MMS User Agent when the appropriate information for the creation of a delivery report is available.

Support for MM1_delivery_report.REQ is optional for the MMS User Agent but mandatory for the MMS Relay/Server.

8.1.7.2 Abnormal Operation

The MMS protocol framework does not provide mechanisms to cover and handle the unsuccessful delivery of MM1_delivery_report.REQ.

The underlying protocols shall provide reliable transport of MM1_delivery_report.REQ. Moreover, underlying protocol layers may provide a mechanism for the MMS User Agent to acknowledge successful reception of a MM1_delivery_report.REQ to the MMS Relay/Server.

8.1.7.3 Features

Identification: In the MM1_delivery_report.REQ the MMS Relay/Server shall always provide the original message identification of the MM that the delivery report corresponds to.

Addressing: The MM recipient address shall be provided to the originator MMS User Agent in the addressing-relevant information field of MM1_delivery_report.REQ.

Time stamping: The MM1_delivery_report.REQ shall carry the time and date of handling of the MM (e.g. retrieval, expiry, rejection)**.**

MM Status: The MM1_delivery_report.REQ shall carry the status of the MM delivery, e.g. retrieved, forwarded, rejected, expired or indeterminate. The status code may be supported with an explanatory text to further qualify the status of the MM delivery (e.g. recipient does not support MMS, recipient address unresolved, MM is too big, if/what content adaptation took place, address where the MM was forwarded).

Version: The MMS protocol shall provide unique means to identify the current version of the particular protocol environment.

Message Type: The type of the message used on the reference point MM1 indicating MM1_delivery_report.REQ as such.

Applic-ID: This information element indicates the identification of the application that the delivery report is intended for. If a Reply-Applic-ID was indicated in the corresponding original MM, the recipient MMS Relay/Server shall set its value to that Reply-Applic-ID value. Otherwise, the recipient MMS Relay/Server shall set its value to the Applic-ID value that was indicated in the corresponding original MM.

Reply-Applic-ID: If present, this information element indicates a “reply path” to this delivery report, i.e. the identification of an application to which reply-MMs are addressed. The recipient MMS Relay/Server shall insert it into the MM1_delivery_report.REQ if the values of Applic-ID and Reply-Applic-ID in the corresponding original MM differ, in which case its value shall equal the Applic-ID value that was indicated in the corresponding original MM.

Aux-Applic-Info: If present, t his information element indicates additional application/implementation specific control information (cf. 7.1.18.1) . The recipient MMS Relay/Server shall insert it if Aux-Applic-Info was indicated in the corresponding original MM, in which case its value shall equal that Aux-Applic-Info value.

8.1.7.4 Information Elements

Table 18: Information elements in the MM1_delivery_report.REQ.

Information element	Presence	Description
Message Type	Mandatory	Identifies this message as MM1_delivery_report.REQ.
MMS Version	Mandatory	Identifies the version of the interface supported by the MMS Relay/Server.
Message ID	Mandatory	The identification of the original MM.
Recipient address	Mandatory	The address of the MM recipient of the original MM.
Date and Time	Mandatory	Date and time the MM was handled (retrieved, expired, rejected, etc.) (time stamp)
MM Status	Mandatory	Status of the MM, e.g. retrieved, forwarded, expired, rejected
MM Status text	Optional	Text description of the status for display purposes, should qualify the MM Status
Applic-ID	Optional	The identification of the application that this delivery report is intended for.
Reply-Applic-ID	Optional	Identification of a “reply path” to this delivery report.
Aux-Applic-Info	Optional	Auxiliary application addressing information as indicated in the original MM.

8.1.8 Read-Reply Report

This part of MMS service covers the sending of read-reply report from the recipient MMS User Agent to the recipient MMS Relay/Server and the sending of read-reply report from the originator MMS Relay/Server to the originator MMS User Agent. The involved abstract messages are outlined in the table below from type and direction points of view.

Table 19: Abstract messages for sending and receiving read-reply report in MMS

Abstract messages	Type	Direction
MM1_read_reply_recipient.REQ	Request	MMS UA -> MMS Relay/Server
MM1_read_reply_originator.REQ	Request	MMS Relay/Server -> MMS UA

8.1.8.1 Normal Operation

If a read-reply report is requested for an MM, the recipient MMS User Agent may create the MM1_read_reply_recipient.REQ and send it to the recipient MMS Relay/Server.

The originator MMS Relay/Server shall (subject to user, MMS service provider and/or operator preferences) create the MM1_read_reply_originator.REQ and send it to the originator MMS User Agent when the appropriate information for the creation of a read-reply report is available.

Support for MM1_read_reply_recipient.REQ and MM1_read_reply_originator.REQ is optional for the MMS User Agent but mandatory for the MMS Relay/Server.

8.1.8.2 Abnormal Operation

The MMS protocol framework does not provide mechanisms to cover and handle the unsuccessful delivery of MM1_read_reply_recipient.REQ and MM1_read_reply_originator.REQ.

The underlying protocols shall provide reliable transport of MM1_read_reply_recipient.REQ and MM1_read_reply_originator.REQ. Moreover, underlying protocol layers may provide a mechanism for the MMS Relay/Server to acknowledge successful reception of a MM1_read_reply_recipient.REQ to the MMS User Agent. Underlying protocol layers may also provide a mechanism for the MMS User Agent to acknowledge successful reception of a MM1_read_reply_originator.REQ to the MMS Relay/Server.

8.1.8.3 Features

Identification: In the MM1_read_reply_recipient.REQ the recipient MMS User Agent shall provide the original message identification of the MM that the read-reply report corresponds to. In the MM1_read_reply_originator.REQ the

originator MMS Relay/Server shall provide the original message identification of the MM that the read-reply report corresponds to.

Addressing: The MM originator address shall be provided in the addressing-relevant information field(s) of MM1_read_reply_recipient.REQ. The MM recipient address shall be provided in the addressing-relevant information field(s) of MM1_read_reply_recipient.REQ. Both, the MM recipient and MM originator addresses shall be provided in the addressing-relevant information field(s) of the MM1_read_reply_originator.REQ. If the MM recipient address is not yet provided in the MM1_read_reply_recipient.REQ the MM1_read_reply_originator.REQ shall carry the MM recipient address set by the recipient MMS Relay/Server.

Time stamping: The MM1_read_reply_recipient.REQ may carry the time and date of user handling the MM depending on the status of the MM. The MM1_read_reply_originator.REQ shall carry the time-stamp from the corresponding MM1_read_reply_recipient.REQ if provided. If this time-stamp is not yet provided the MM1_read_reply_originator.REQ shall carry the time-stamp set by the recipient MMS Relay/Server.

Read Status: Both the MM1_read_reply_recipient.REQ and MM1_read_reply_originator.REQ shall carry the status of the MM handling, e.g. read or without being read.

Version: The MMS protocol shall provide unique means to identify the current version of the particular protocol environment.

Message Type: The type of the message used on the reference point MM1 indicating MM1_read_reply_recipient.REQ and MM1_read_reply_originator.REQ as such.

Applic-ID: This information element indicates the identification of the application that the read-reply report is intended for. If a Reply-Applic-ID was indicated in the corresponding original MM, the recipient MMS User Agent shall set its value to that Reply-Applic-ID value. Otherwise, the recipient MMS User Agent shall set its value to the Applic-ID value that was indicated in the corresponding original MM.

Reply-Applic-ID: If present, this information element indicates a “reply path” to this read-reply report, i.e. the identifier of the application to which reply-MMs to this read-reply report are addressed if any.

Aux-Applic-Info: If present, t his information element indicates additional application/implementation specific control information (cf. 7.1.18.1).

8.1.8.4 Information Elements

Table 20: Information elements in the MM1_read_reply_recipient.REQ.

Information element	Presence	Description
Message Type	Mandatory	Identifies this message as MM1_read_reply_recipient.REQ.
MMS Version	Mandatory	Identifies the version of the interface supported by the MMS User Agent.
Recipient address	Mandatory	The address of the MM recipient of the original MM, i,e, the originator of the read-reply report.
Originator address	Mandatory	The address of the MM originator of the original MM, i,e, the recipient of the read-reply report.
Message ID	Mandatory	The message ID of the original MM.
Date and Time	Optional	Date and time the MM was handled (read, deleted without being read, etc.) (time stamp)
Read Status	Mandatory	Status of the MM, e.g. Read, Deleted without being read
Applic-ID	Optional	The identification of the application that the read-reply report is intended for.
Reply-Applic-ID	Optional	The identification of a “reply path” to this read-reply report.
Aux-Applic-Info	Optional	Auxiliary application addressing information.

Table 21: Information elements in the MM1_read_reply_originator.REQ.

Information element	Presence	Description
Message Type	Mandatory	Identifies this message as MM1_read_reply_originator.REQ.
MMS Version	Mandatory	Identifies the version of the interface supported by the MMS Relay/Server.
Recipient address	Mandatory	The address of the MM recipient of the original MM, i,e, the originator of the read-reply report.
Originator address	Mandatory	The address of the MM originator of the original MM, i,e, the recipient of the read-reply report.
Message ID	Mandatory	The message ID of the original MM.
Date and Time	Mandatory	Date and time the MM was handled (read, deleted without being read, etc.) (time stamp)
Read Status	Mandatory	Status of the MM, e.g. Read, Deleted without being read
Applic-ID	Optional	The identification of the application that the read-reply report is intended for.
Reply-Applic-ID	Optional	The identification of a “reply path” to this read-reply report.
Aux-Applic-Info	Optional	Auxiliary application addressing information.

8.1.9 Storing and Updating Multimedia Messages in an MMBox

This section describes the storage of an MM into the user’s MMBox. Requests from an MMS User Agent to store MMs will always be sent to the corresponding MMS Relay/Server. Involved abstract messages are outlined in the table below from type and direction points of view.

Table 22: Abstract messages for storing or updating stored MMs

Abstract messages	Type	Direction
MM1_mmbox_store.REQ	Request	MMS UA -> MMS Relay/Server
MM1_mmbox_store.RES	Response	MMS UA <- MMS Relay/Server

8.1.9.1 Normal operation

The MMS User Agent shall submit a request to store an MM into the MMBox using the MM1_mmbox_store.REQ, which contains the Message Reference received in the MM1_notification.REQ. In addition, the MMS User Agent shall submit a request to update the MM State and/or MM Flags of an MM already stored within an MMBox using the MM1_mmbox_store.REQ, which contains the Message Reference, MM State and/or MM Flags obtained from any previous operation resulting in an MM being stored or updated in the MMBox.

The MMS Relay/Server shall respond with an MM1_mmbox_store.RES, which provides the status of the store or MM update request. The MM1_mmbox_store.RES shall unambiguously refer to the corresponding MM1_mmbox_store.REQ.

Support for MM1_mmbox_store transactions are optional for the MMS UA and mandatory for the MMS Relay/Server, if MMBoxes are supported.

8.1.9.2 Abnormal Operation

In this case the MMS Relay/Server shall respond with a MM1_mmbox_store.RES containing a status which indicates the reason the multimedia message was not able to be stored or updated, e.g. service not available, MMBoxes not supported, MMBox not enabled, MMBox over quota, MMBox system full, MMBox system I/O error.

If the MMS Relay/Server does not provide the MM1_mmbox_store.RES, the MMS User Agent should assume that the MM was not stored or updated, and should be able to recover.

8.1.9.3 Features

Message Reference: The message reference, in MM1_mmbox_store.REQ, indicates the MM to be stored or updated. This reference can be from MM1_notification.REQ, or the message reference from any of the store request responses (e.g.: MM1_mmbox_store.RES, MM1_mmbox_view.RES, MM1_forward.RES with Store, MM1_submit.RES with Store). The message reference, in MM1_mmbox_store.RES, indicates a reference to the newly stored or updated MM, suitable for subsequent usage.

MM State: The MMS User Agent may request that the MM be stored, or updated, with a specific MM State. In the absence of this value when the Message Reference refers to a new MM (i.e.: from MM1_notification.REQ), the default shall be the New state. In the absence of this value when the Message Reference refers to an MM already stored, the MM State will not be changed.

MM Flags: if present, one or more keyword values. In the absence of this element, no values are assumed for newly stored MMs and no changes made for already stored MMs.

Store Status: The MMS Relay/Server shall indicate the status of the MM1_mmbox_store.REQ in the Store Status information element of the associated MM1_mmbox_store.RES. The Store Status information element of the MM1_mmbox_store.RES may be supported with an explanatory text. If this text is available in the Store Status Text information element the MMS User Agent should bring it to the user's attention. The choice of the language used in the Store Status text information element is at the discretion of the MMS service provider.

Transaction Identification: The MMS User Agent shall provide unambiguous transaction identification within a request. The response shall unambiguously refer to the corresponding request using the same transaction identification.

Version: The MMS protocol shall provide unique means to identify the current version of the particular protocol environment.

Message Type: The type of the message used on the reference point MM1 indicating MM1_mmbox_store.REQ and MM1_mmbox_store.RES as such.

8.1.9.4 Information Elements

Table 23: Information elements in the MM1_mmbox_store.REQ

Information element	Presence	Description
Message Type	Mandatory	Identifies this message as MM1_mmbox_store.REQ.
Transaction ID	Mandatory	The identification of the MM1_mmbox_store.REQ/MM1_mmbox_store.RES pair.
MMS Version	Mandatory	Identifies the version of the interface supported by the MMS User Agent.
Message Reference	Mandatory	The message reference from a MM1_notification.REQ or any previous store or MMBox view operation.
MM State	Optional	The state of the MM. If not present when the Message Reference is from a notification request, defaults to New. No value is assumed when the Message Reference refers to an already stored MM.
MM Flags	Optional	The keyword flags of the MM. There are no defaults.

Table 24: Information elements in the MM1_mmbox_store.RES

Information element	Presence	Description
Message Type	Mandatory	Identifies this message as MM1_mmbox_store.RES.
Transaction ID	Mandatory	The identification of the MM1_mmbox_store.REQ/MM1_mmbox_store.RES pair.
MMS Version	Mandatory	Identifies the version of the interface supported by the MMS Relay/Server.
Message reference	Mandatory	A reference to the newly stored or updated MM, suitable for subsequent usage (eg: with MM1_retrieve.REQ and MM1_mmbox_delete.REQ).
Store Status	Mandatory	The status of the MM store operation.
Store Status Text	Optional	Description which qualifies the status of the MM store request.

8.1.10 View the MMBox

This part of the MMS service describes the mechanism by which an MMS User Agent may request a listing of the MMs contained within the subscriber's MMBox. The MMS User Agent shall issue the request to view selected portions of MMs within the subscriber's MMBox, as well as information about the MMBox itself, from the corresponding MMS Relay/Server.

Involved abstract messages are outlined in the table below from type and direction points of view.

Table 25: Abstract messages for viewing the MMBox

Abstract messages	Type	Direction
MM1_mmbox_view.REQ	Request	MMS UA -> MMS Relay/Server
MM1_mmbox_view.RES	Response	MMS UA <- MMS Relay/Server

8.1.10.1 Normal Operations

The MMS User Agent will issue an MM1_mmbox_view.REQ message, containing optional request qualifiers, to the MMS Relay/Server. The MMS Relay/Server will respond with an abstract message, MM1_mmbox_view.RES, containing the original selection parameters and the resulting view data as the content of the abstract message. This information shall consist of a listing of the MMBox contents, possibly including information about the MMBox itself.

When the Start and Limit attributes are used, several pairs of MM1 mmbox_view.REQ and MM1_mmbox_view.RES transactions may be used in order to acquire the complete set of results. The MM1_mmbox_view.RES shall contain the selection parameters that were used to generate the contents of the response, including the Start and Limit attributes, present.

8.1.10.2 Abnormal Operations

In this case the originator MMS Relay/Server shall respond with a MM1_mmbox_view.RES encapsulating a status which indicates the reason the operation could not be completed, e.g. corrupted abstract message, no subscription, service not available, MMBox not supported, MMBox not enabled, MMBox I/O error.

If the MMS Relay/Server does not provide the MM1_mmbox_view.RES the MMS User Agent should be able to recover.

8.1.10.3 Features

Attributes list: A list of information element names that are used in the MM1_mmbox_view.REQ, which request corresponding information elements from the MMs to be conveyed in the MM1_mmbox_view.RES. The list of known information element names are those currently defined for the MM1_retrieve.RES and MM1_notification.REQ. The Content information element may be specified, with the result that content of each MM selected is also returned in the response.

In the absence of the Attributes list information element, the MMS Relay/Server shall, by default and if available, select these information elements from each viewed MM: Message ID, Date and time, Sender address, Subject, Message size, MM State, and MM Flags.

Message Selection: Messages which are to be viewed may be selected by a list of Message References or by a selection based on MM State and/or MM Flags keywords. Either Message Reference List or Select may be supplied in the MM1_mmbox_view.REQ, which selects MMs for inclusion in the content in the MM1_mmbox_view.RES. In the absence of the Message Reference List, if Select is present and if any of the select keywords matches either the MM State or any of the MM flags on an MM in the MMBox, the requested information elements of the MM shall be included in the MM1_mmbox_view.RES (example: "Select: new" or "Select: draft"), along with the Select information element. The absence of both the Message References List and the Select information elements shall yield a listing of all MMs currently stored within the MMBox.

Partial views: MMBox view results may be received in its entirety, or may be indexed to start the view at a given MM offset relative to the selected MMs, and/or may be limited to finite number of MMs to be viewed. The Start information element is a number that may be used in the MM1_mmbox_view.REQ to index the first MM to be viewed, relative to the selected set of MMs, allowing partial views to be requested. If Start is absent, the first selected MM will begin the

view results. The Limit information element is a number that may be provided in the MM1_mmbox_view.REQ to specify a limit for the number of MMs the information elements to which shall be returned in the MM1_mmbox_view.RES. If Limit is absent, all of the remaining MMs shall be returned. If present in the MM1_mmbox_view.REQ, then the Start and Limit information elements are returned in the corresponding MM1_mmbox_view.RES.

MMBox Information: The Totals information element, if present on the request, indicates that the MMBox totals are requested. In the response, the Totals information element value shall be the total number of messages and/or total size, with the units (e.g.: Messages or Bytes) identified. The Quotas information element, if present on the request, indicates that the MMBox quotas, in terms of messages and/or size, are requested. In the response, the Quotas information element value shall be the quotas as the maximum number of messages allowed and/or the maximum size allowed, with the units (e.g.: Messages or Bytes) identified.

MM Listing: a list of information elements from the MMs returned within the MM1_mmbox_view.RES. The listing shall consist of the following information elements, separately grouped for each MM returned in the list:

- Message reference: a unique reference to an MM
- Information elements corresponding to those requested in the Select information element on the MM1_mmbox_view.REQ;

The grouping of information elements from multiple MMs in the the listing shall be accomplished with a consistent encapsulation (e.g., MIME-encapsulation), such that the information elements of each MM shall be clearly distinguished from those of another MM.

Request Status: This will be the status code for any failures of the MM1_mmbox_view.REQ command. The reason code given in the status information element of the MM1_mmbox_view.RES may be supported with an explanatory text further qualifying the status. If this text is available in the Request status text information element the MMS User Agent should bring it to the user's attention. The choice of the language used in the Request status text information element is at the discretion of the MMS service provider.

Transaction Identification: The MMS User Agent shall provide unambiguous transaction identification within a request. The response shall unambiguously refer to the corresponding request using the same transaction identification.

Version: The MMS protocol shall provide unique means to identify the current version of the particular protocol environment.

Message Type: The type of the message used on the reference point MM1 indicating MM1_mmbox_view.REQ and MM1_mmbox_view.RES as such.

8.1.10.4 Information Elements

Table 26: Information elements in the MM1_mmbox_view.REQ

Information element	Presence	Description
Message Type	Mandatory	Identifies this message as MM1_mmbox_view.REQ.
Transaction ID	Mandatory	The identification of the MM1_mmbox_view.REQ/MM1_mmbox_view.RES pair.
MMS Version	Mandatory	Identifies the version of the interface supported by the MMS User Agent.
Attributes list	Optional	A list of information elements that are to be returned as a group for each MM to be listed in the MM1_mmbox_view.RES. If absent, the default list shall apply.
Message Reference list	Optional	One or more Message References which are to have their information elements listed.
Select	Optional	A list of MM State or MM Flags keywords, by which MMs within the MMBox can be selected, if the Message Reference list is absent.
Start	Optional	A number, indicating the index of the first MM of those selected to have information elements returned in the response. If this is absent, the first item selected is returned.
Limit	Optional	A number indicating the maximum number of selected MMs to their information elements returned in the response. If this is absent, information elements from all remaining MMs are returned.
Totals	Optional	Indicates that the current total number of messages and/or size contained by the MMBox are requested
Quotas	Optional	Indicates that the current message and/or size quotas are requested

Table 27: Information elements in the MM1_mmbox_view.RES

Information element	Presence	Description
Message Type	Mandatory	Identifies this message as MM1_mmbox_view.RES.
Transaction ID	Mandatory	The identification of the MM1_mmbox_view.REQ/MM1_mmbox_view.RES pair.
MMS Version	Mandatory	Identifies the version of the interface supported by the MMS Relay/Server.
MM Listing	Conditional	The requested listing of the selected MMs, which shall be one or more groups of information elements, one for each MM listed. Each clearly separated MM group shall include: a Message Reference, and will include the additional information elements specified by the Attributes as well. If absent, no MMs were found or selected.
Attributes list	Optional	A list of information elements that were specified in the MM1_mmbox_view.RES. If absent, the default list was applied.
Select	Optional	If present, a list of MM State or MM Flags keywords, which selected the MMs returned in this response.
Start	Optional	If present, the numeric index of the first MM of the selected MMs returned in the response.
Limit	Optional	If present, the maximum number of selected MMs from which some or all information elements have been returned in the response. If this is absent, information elements from all remaining MMs are returned.

Request Status	Conditional	If an error occurs, this is a code indicating the exact cause of the error. For successful responses, the Status may be returned with a corresponding success code.
Request Status Text	Optional	If an error occurs, this may contain explanatory text that corresponds to the Request Status.
Totals	Conditional	The total number of messages and/or bytes for the MMBox, identified with Messages or Bytes, respectively, depending upon the presence of Totals in the request.
Quotas	Conditional	The quotas of the MMBox in messages and/or bytes identified with Messages or Bytes, respectively, depending upon the presence of Quotas in the request.

8.1.11 Uploading and Persistently Storing Multimedia Messages

This section describes the uploading and storage of an MM into the subscriber's MMBox. Requests from an MMS User Agent to upload and store MMs in the subscriber's MMBox shall be sent to the corresponding MMS Relay/Server. Involved abstract messages are outlined in the table below from type and direction points of view.

Table 28: Abstract messages for uploading and storing MMs

Abstract messages	Type	Direction
MM1_mmbox_upload.REQ	Request	MMS UA -> MMS Relay/Server
MM1_mmbox_upload.RES	Response	MMS UA <- MMS Relay/Server

8.1.11.1 Normal operation

The MMS User Agent shall submit a request to upload and store an MM into the MMBox using the MM1_mmbox_upload.REQ, which contains MMS control information and the MM content.

The MMS Relay/Server shall respond with an MM1_mmbox_upload.RES, which provides the status of the store request. The MM1_mmbox_upload.RES shall unambiguously refer to the corresponding MM1_mmbox_upload.REQ.

Support for MM1_mmbox_upload.REQ is optional for the MMS UA, support for MM1_mmbox_upload.RES is mandatory for the MMS Relay/Server.

8.1.11.2 Abnormal Operation

In this case the MMS Relay/Server shall respond with a MM1_mmbox_upload.RES encapsulating a status which indicates the reason the multimedia message was not accepted, e.g. service not available, MMBoxes not supported, MMBox not enabled, MMBox over quota, MMBox system full, MMBox system I/O error.

If the MMS Relay/Server does not provide the MM1_mmbox_upload.RES the MMS User Agent should assume that the MM was not stored, and should be able to recover.

8.1.11.3 Features

Addressing: One or several MM recipients and the originator of a submitted MM may be indicated in the addressing-relevant information field(s) of the MM1_mmbox_upload.REQ. It is possible for incompletely composed MMs to be stored, which means that the addressing-relevant information fields may be empty.

Time stamping: The originator MMS User Agent may time stamp the MM.

Message class, priority and subject: The MM may be qualified further by adding a message class, priority and/or subject to the MM in the MM1_mmbox_upload.REQ. Additional qualifiers may be added.

Identification: For an MM that has been stored persistently, the MMS Relay/Server shall always provide a message identification in the MM1_mmbox_upload.RES.

MM State: The MMS User Agent may request that the submitted MM be stored with a specific MM State. In the absence of this value, the default shall be the Draft state.

MM Flags: if present, one or more keyword values.

Content Type: The MIME type of the MM shall always be identified.

Content: The content of the MM to be uploaded and stored.

Request Status: The MMS Relay/Server shall indicate the status of the MM1_mmbox_upload.REQ in the associated MM1_mmbox_upload.RES. The reason code given in the status information element of the MM1_mmbox_upload.RES may be supported with an explanatory text further qualifying the status. If this text is available in the Request status text information element the MMS User Agent should bring it to the user's attention. The choice of the language used in the Request status text information element is at the discretion of the MMS service provider.

Transaction Identification: The MMS User Agent shall provide unambiguous transaction identification within a request. The response shall unambiguously refer to the corresponding request using the same transaction identification.

Version: The MMS protocol shall provide unique means to identify the current version of the particular protocol environment.

Message Type: The type of the message used on the reference point MM1 indicating MM1_mmbox_upload.REQ and MM1_mmbox_upload.RES as such.

8.1.11.4 Information Elements

Table 29: Information elements in the MM1_mmbox_upload.REQ

Information element	Presence	Description
Message Type	Mandatory	Identifies this message as MM1_mmbox_upload.REQ.
Transaction ID	Mandatory	The identification of the MM1_mmbox_upload.REQ/MM1_mmbox_upload.RES pair.
MMS Version	Mandatory	Identifies the version of the interface supported by the MMS User Agent.
Recipient address	Optional	The address of the recipient(s).
Sender address	Optional	The address of the MM originator.
Message class	Optional	The class of the MM (e.g., personal, advertisement, information service)
Date and time	Optional	The time and date of the upload of the MM (time stamp).
Time of Expiry	Optional	The desired time of expiry for the MM or reply-MM (time stamp).
Earliest delivery time	Optional	The earliest desired time of delivery of the MM to the recipient (time stamp).
Priority	Optional	The priority (importance) of the message.
MM State	Optional	The state of the MM. Will default to the Draft state if absent.
MM Flags	Optional	The keyword flags of the MM. There are no defaults.
Subject	Optional	The title of the whole multimedia message.
Content type	Mandatory	The content type of the MM's content
Content	Mandatory	The content of the multimedia message

Table 30: Information elements in the MM1_mmbox_upload.RES

Information element	Presence	Description
Message Type	Mandatory	Identifies this message as MM1_mmbox_upload.RES.
Transaction ID	Mandatory	The identification of the MM1_mmbox_upload.REQ/MM1_mmbox_upload.RES pair.
MMS Version	Mandatory	Identifies the version of the interface supported by the MMS Relay/Server.
Message reference	Mandatory	A reference to the newly stored MM, suitable for subsequent usage (e.g.: with MM1_retrieve.REQ, MM1_mmbox_delete.REQ, etc.).
Request Status	Mandatory	The status of the MM upload operation.
Request Status Text	Optional	Description which qualifies the status of the MM submit request.

8.1.12 Deletion of Stored Multimedia Messages

This section describes the deletion of one or more Multimedia Messages (MMs) from the subscriber's MMBox. Requests from an MMS User Agent to delete MMs from the subscriber's MMBox will always be sent to the corresponding MMS Relay/Server. Involved abstract messages are outlined in the table below from type and direction points of view.

Table 31: Abstract messages for MM deletion in MMS

Abstract messages	Type	Direction
MM1_mmbox_delete.REQ	Request	MMS User Agent -> MMS Relay/Server
MM1_mmbox_delete.RES	Response	MMS User Agent <- MMS Relay/Server

8.1.12.1 Normal Operations

The MMS User Agent may issue an MM1_mmbox_delete.REQ message to the MMS Relay/Server with one or more Message References. The MMS Relay/Server shall perform the requested deletions and return an MM1_mmbox_delete.RES which shall contain a successful response code, or shall contain any error status and optional text.

If multiple Message References are successfully deleted, the response shall contain only a successful Status code and no Message Reference.

Support for MM1_mmbox_delete.REQ is optional for the MMS UA, and mandatory for the MMS Relay/Server, if MMBoxes are supported.

8.1.12.2 Abnormal Operations

In this case the MMS Relay/Server shall respond with a MM1_mmbox_delete.RES encapsulating a status which indicates the reason the multimedia message was not deleted, e.g. corrupted abstract message, invalid message reference, service not available, MMBoxes not supported, MMBox not enabled, MMBox system I/O error.

If the MMS Relay/Server does not provide the MM1_mmbox_delete.RES the MMS User Agent should be able to recover.

When multiple Message References are submitted for deletion and an error occurs, then the Message Reference of each MM in error will be returned with an appropriate error code and text.

8.1.12.3 Features

Message Reference: The message reference indicating the MM to be deleted. Multiple message references may be given, allowing multiple MMs to be deleted within the same transaction.

Request Status: The MMS Relay/Server shall indicate the status of the MM1_mmbox_delete.REQ in the associated MM1_mmbox_delete.RES. The reason code given in the status information element of the MM1_mmbox_delete.RES may be supported with an explanatory text further qualifying the status. If this text is available in the Request status text information element the MMS User Agent should bring it to the user's attention. The choice of the language used in the Request status text information element is at the discretion of the MMS service provider.

Transaction Identification: The MMS User Agent shall provide unambiguous transaction identification within a request. The response shall unambiguously refer to the corresponding request using the same transaction identification.

Version: The MMS protocol shall provide unique means to identify the current version of the particular protocol environment.

Message Type: The type of the message used on the reference point MM1 indicating MM1_mmbox_delete.REQ and MM1_mmbox_delete.RES as such.

8.1.12.4 Information Elements

Table 32: Information elements in the MM1_mmbox_delete.REQ

Information element	Presence	Description
Message Type	Mandatory	Identifies this message as MM1_mmbox_delete.REQ.
Transaction ID	Mandatory	The identification of the MM1_mmbox_delete.REQ/MM1_mmbox_delete.RES pair.
MMS Version	Mandatory	Identifies the version of the interface supported by the MMS User Agent.
Message Reference	Mandatory	The Message Reference of the message to be deleted; this element may occur multiple times, once for each MM to be deleted.

Table 33: Information elements in the MM1_mmbox_delete.RES

Information element	Presence	Description
Message Type	Mandatory	Identifies this message as MM1_mmbox_delete.RES.
Transaction ID	Mandatory	The identification of the MM1_mmbox_delete.REQ/MM1_mmbox_delete.RES pair.
MMS Version	Mandatory	Identifies the version of the interface supported by the MMS Relay/Server.
Message Reference	Conditional	A reference to the message in error, if any, to which the following information elements apply. Multiple message references may occur.
Request Status	Mandatory	The status of the MM deletion request; multiple Statuses may occur, each one referring to the immediately preceding Message Reference.
Request Status Text	Optional	Description which qualifies the status of the MM deletion request; multiple Status Text entries may occur, each one corresponding to the immediately preceding Request Status.

8.1.13 Cancelling a Multimedia Message

This part of the MMS service describes the mechanism by which an MMS Relay/Server may request an MMS User Agent, that an MM which the MMS User Agent has already retrieved be cancelled.

For cancelling purposes an MM cancel request shall always be requested by an MMS Relay/Server to an MMS User Agent. Request from a VASP to cancel an MM (in terms of MM7_extended_cancel.REQ) invokes the cancel request in the MMS Relay/Server. Involved abstract messages are outlined in the table below from type and direction points of view.

Table 34: Abstract messages for cancelling an MM

Abstract messages	Type	Direction
MM1_cancel.REQ	Request	MMS Relay/Server -> MMS UA
MM1_cancel.RES	Response	MMS UA -> MMS Relay/Server

8.1.13.1 Normal operation

The MMS Relay/Server shall issue an MM1_cancel.REQ to the MMS User Agent, which contains the identification of the message to be cancelled. The MMS User Agent shall respond with an MM1_cancel.RES.

The MM1_cancel.RES shall unambiguously refer to the corresponding MM1_cancel.REQ.

Support for MM1_cancel.REQ and MM1_cancel.RES is optional for both MMS User Agent and MMS Relay/Server.

8.1.13.2 Abnormal Operation

In this case the MMS User Agent shall respond with an MM1_cancel.RES encapsulating a status which indicates the reason the request for cancelling was not accepted, e.g. the MM is not available, denied by a user.

If the MMS User Agent does not provide the MM1_cancel.RES, the MMS Relay/Server should be able to recover. In this case, the MMS Relay/Server may retransmit the MM1_cancel.REQ to the MMS User Agent.

8.1.13.3 Features

Transaction Identification: The MMS Relay/Server shall provide an unambiguous transaction identification within a request. The response shall unambiguously refer to the corresponding request using the same transaction identification.

Version: The MMS protocol shall provide unique means to identify the current version of the particular protocol environment.

Message Type: The type of the message used on the reference point MM1 indicating MM1_cancel.REQ and MM1_cancel.RES as such.

Cancel ID: The MMS Relay/Server shall provide the identification of the original MM to be cancelled in the cancel request.

Request Status: The MMS User Agent may provide the status if the request was successfully received to the MMS Relay/Server in the MM1_cancel.RES.

8.1.13.4 Information Elements

Table 35: Information elements in the MM1_cancel.REQ.

Information element	Presence	Description
Message Type	Mandatory	Identifies this message as MM1_cancel.REQ.
Transaction ID	Mandatory	The identification of the MM1_cancel.REQ/MM1_cancel.RES pair.
MMS Version	Mandatory	Identifies the version of the interface supported by the forwarding MMS Relay/Server.
Cancel ID	Mandatory	Identifies the MM to be cancelled.

Table 36: Information elements in the MM1_cancel.RES.

Information element	Presence	Description
Message Type	Mandatory	Identifies this message as MM1_cancel.RES.
Transaction ID	Mandatory	The identification of the MM1_cancel.REQ/MM1_cancel.RES pair.
MMS Version	Mandatory	Identifies the version of the interface supported by the MMS User Agent.
Request Status	Optional	The status if the MM cancel request was received.

8.1.14 Deletion of Multimedia Messages on an MMS Relay/Server

This part of MMS service covers the deletion of MM(s). It can be used by the MMS User Agent to request the recipient MMS Relay/Server, to delete one or more of its deferred MMs. The deletion request shall always be submitted from the originator MMS User Agent to the corresponding MMS Relay/Server. Involved abstract messages are outlined in the table below from type and direction points of view.

Table 37 Abstract messages for deletion of deferred MMs on MMS Relay/Server

Abstract messages	Type	Direction
MM1_delete.REQ	Request	MMS UA -> MMS Relay/Server
MM1_delete.RES	Response	MMS Relay/Server -> MMS UA

8.1.14.1 Normal operation

The originator MMS User Agent shall request deletion of deferred MMs using the MM1_delete.REQ.

The MMS Relay/Server shall respond with an MM1_delete.RES, which provides the status of the request. The MM1_delete.RES shall unambiguously refer to the corresponding MM1_delete.REQ.

Support for MM1_delete.REQ is optional for the MMS User Agent, support for MM1_delete.RES is optional for the MMS Relay/Server.

8.1.14.2 Abnormal Operation

In this case the originator MMS Relay/Server shall respond with an MM1_delete.RES encapsulating a status which indicates the reason the multimedia message was not deleted, e.g. MM unavailable.

If the MMS Relay/Server does not provide the MM1_delete.RES the MMS User Agent should be able to recover.

8.1.14.3 Features

Message Reference: The recipient MMS Relay/Server shall always provide a reference, e.g., URI, for the deferred MM(s) in the MM1_Delete.REQ.

MMS Version: The MMS protocol shall provide unique means to identify the current version of the particular protocol environment.

Message Type: The type of the message used on the reference point MM1 indicating MM1_ Delete.REQ and MM1_ Delete.RES as such.

Request Status: In case of normal operation the recipient MMS Relay/Server shall indicate in the MM1_ Delete.RES that the deletion of the MM was processed correctly. In case of abnormal operation the recipient MMS Relay/Server shall indicate in the MM1_ Delete.RES the reason why the multimedia message could not be deleted. The corresponding reason codes should cover application level errors (e.g. "MM unavailable").

The reason code given in the status information element of the MM1_ Delete.RES may be supported with an explanatory text further qualifying the status. If this text is available in the Request status text information element the MMS User Agent may bring it to the user's attention. The choice of the language used in the Request status text information element is at the discretion of the MMS service provider.

8.1.14.4 Information Elements

Table 38: Information elements in the MM1_Delete.REQ.

Information element	Presence	Description
Message Type	Mandatory	Identifies this message as MM1_ Delete.REQ
Transaction ID	Mandatory	The identification of the MM1_ Delete.RES pair.
MMS Version	Mandatory	Identifies the version of the interface supported by the MMS Relay/Server.
Message Reference	Mandatory	The message reference (e.g., URI) of the deferred MM(s) to be deleted; this element occurs at least once, but may occur multiple times. Once for each deferred MM to be deleted.

Table 39: Information elements in the MM1_Delete.RES.

Information element	Presence	Description
Message Type	Mandatory	Identifies this message as MM1_ Delete.RES.
Transaction ID	Mandatory	The identification of the MM1_ Delete.REQ/MM1_ Delete.RES pair.
MMS Version	Mandatory	Identifies the version of the interface supported by the MMS User Agent.
Request Status	Mandatory	The status of the MM1_Delete.REQ; this element occurs at least once, but may occur multiple times. Each one referring to the immediately preceeding Message Reference.
Request Status Text	Optional	Description which qualifies the status of the MM1_Delete.REQ; this element occurs at least once, but may occur multiple times. Each one corresponding to the immediately preceeding Request status.

8.2 Technical realisation of MMS on reference point MM2

This clause may be specified further in future releases.

8.3 Technical realisation of MMS on reference point MM3

This clause defines the interworking between MMS Relay/Servers and External Messaging Servers. The interworking with these External Servers may be based on the Internet Protocol, IP.

Reference point MM3 should be based upon existing standards e.g. HTTP, SMTP. Several examples of realisations can be found in Annex A. In addition, MMS service providers or network operators may develop solutions for their particular needs.

8.3.1 Sending of MMs

For the purpose of sending an MM to an external messaging system the originator MMS Relay/Server should convert the MM into a format appropriate for the external messaging system. This is further elaborated in Annex D1

When converting the MM to the format used by the external messaging system, the MMS Relay/Server should use the information elements associated with the MM and differentiating between those information elements that are needed for the transfer protocol and those elements that should be conveyed as part of the converted message.

E.g., the originator MMS Relay/Server should use the recipient's address(es) as indicated in the corresponding MM to route the converted message towards its recipient(s). In addition to this, it may convey message class, priority and subject of the associated MM as part of the converted message.

8.3.2 Receiving of messages

For the purpose of receiving a message from an external messaging system the recipient MMS Relay/Server should convert incoming messages to the MM format in use by the recipient(s) that form part of the recipient MMS Service Provider's domain.

The recipient MMS Relay/Server may convert control information received from the External Server into appropriate information elements of an MM.

E.g., the recipient MMS Relay/Server should use the MSISDNs associated with an SMS-Short Message to define the sender's and recipient's addresses of the MM. In addition to this, it may e.g. map a priority assigned to an incoming SMS-Short Message to the MM's priority.

8.3.3 Discovery of new messages on External Servers

For discovery of incoming messages from external messaging systems different mechanisms may be utilised, e.g.:

- forwarding of messages from External Server to MMS Relay/Server, based on criteria defined by the user or application;
- notification of messages from an External Server, followed by retrieval by the MMS User Agent via the MMS Relay/Server;
- periodic polling for messages on External Server, followed by retrieval by the MMS User Agent via the MMS Relay/Server.

More detailed specification of these mechanisms should be further elaborated in future versions of the present document.

8.4 Technical realisation of MMS on reference point MM4

An MMSE shall be able to discover a peer MMSE as described in clause 7.2.2. This clause defines the interworking between MMS Relay/Servers once the peer systems are aware of each other being an MMSE.

8.4.1 Routing Forward of a Multimedia Message

This part of MMS service covers the routing forward of an MM from an originator MMS Relay/Server to a recipient MMS Relay/Server of different MMSEs. Involved abstract messages are outlined in the table below from type and direction points of view.

Table 40: Abstract messages for forwarding of MM in MMS

Abstract messages	Type	Direction
MM4_forward.REQ	Request	Originator MMS Relay/Server -> recipient MMS Relay/Server
MM4_forward.RES	Response	Recipient MMS Relay/Server -> originator MMS Relay/Server

8.4.1.1 Normal operation

After successful discovery of its peer entity the originator MMS Relay/Server shall route an MM forward to the recipient MMS Relay/Server using a single or multiple MM4_forward.REQs each containing multiple or single MM recipients, MMS control information and the MM content. The recipient MMS Relay/Server shall respond with a MM4_forward.RES, which provides the status of the request if an MM4_forward.RES was requested. If multiple recipients are addressed in the MM4_Forward.REQ the recipient MMS Relay/Server may respond with any of the following to the originator MMS Relay/Server: a single MM4_Forward.RES message, multiple MM4_Forward.RES messages, or any combination of single or multiple MM4_Forward.RES messages. E.g. this will allow for multiple status indications or a single collective status indication in the MM4_Forward.RES in case of partial addressing failures.

NOTE: Before and including version 6.5.0 of the present document had insufficient mechanisms to convey errors that occurred on multiple recipients to the originator's MMS Relay/Server.

Support for MM4_forward.REQ and MM4_forward.RES is mandatory for the MMS Relay/Server.

8.4.1.2 Abnormal Operation

In this case the recipient MMS Relay/Server shall respond with a MM4_forward.RES, which includes a status that indicates the reason the multimedia message was not accepted, e.g. no subscription, bad address, network not reachable, etc., if an MM4_forward.RES was requested. The MMS Relay/Server should ensure that MM4_Forward.RES messages sent back in response to a MM4_Forward.REQ cover all recipients.

8.4.1.3 Features

Addressing: The recipient(s) of a routed forward MM shall be indicated in the addressing-relevant information field(s) of the MM4_forward.REQ. If the addresses of several MM recipients of the MM are associated with a single MMS

Relay/Server then more than one MM recipient may be indicated in the addressing-relevant information field(s) of the MM4_forward.REQ. Addresses of all MM recipients of the MM (including those that are not associated with the MMS Relay/Server the MM is forwarded to) shall be conveyed in the MM4_forward.REQ for the MM recipient's informational purposes.

The MM originator of a routed forward MM shall be indicated in addressing-relevant information field(s) of the MM4_forward.REQ. If the originator MMS User Agent requested to hide its identity from the MM recipient then the information about this request shall also be conveyed in the MM4_forward.REQ.

Time stamping: The MM4_forward.REQ shall carry the date and time-of the most recent handling of the MM by an MMS User Agent (i.e. either submission or forwarding of the MM). In the case of forwarding the MM4_forward.REQ may carry the date and time of the submission of the MM.

Time constraints: If the originator MMS User Agent requested a time of expiry for the MM then this information shall be conveyed in the MM4_forward.REQ.

Message class, priority and subject: If the MM is qualified further by message class, priority, subject and/or additional qualifiers then this information shall be conveyed in the MM4_forward.REQ.

Reporting: If either the originator MMS User Agent, or the originator MMS Relay/Server requested a delivery report for the MM then the information about this request shall be conveyed in the MM4_forward.REQ. If, in addition, the originator MMS User Agent requested a read-reply report then the information about this request shall be conveyed in the MM4_forward.REQ.

Identification: The originator MMS Relay/Server shall always provide a unique message identification for an MM, which it routed forward to a peer MMS Relay/Server in the MM4_forward.REQ.

Content Type: The type of the multimedia content shall always be identified in the MM4_forward.REQ.

Acknowledgement Request: The originator MMS Relay/Server may request a MM4_forward.RES from the recipient MMS Relay/Server acknowledging the successful reception of the MM.

Request Status: The recipient MMS Relay/Server shall indicate the status of the MM4_forward.REQ in the associated MM4_forward.RES if requested.

Request Recipients: A list of recipients to whom the request status applies.

Message Type: The type of message used on reference point MM4 indicating MM4_forward.REQ and MM4_forward.RES as such.

Transaction Identification: If the originator MMS Relay/Server requests an MM4_forward.RES from the recipient MMS Relay/Server it shall provide a transaction identification within an MM4_forward.REQ. The MM4_forward.RES shall unambiguously refer to the corresponding MM4_forward.REQ using the same transaction identification.

Forward_Counter: A Counter indicating the number of times the particular MM was forwarded by a forwarding MMS User Agent.

Previously-sent-by: The address(es) of the MMS User Agent(s) that submitted or forwarded the MM prior to the last forwarding MMS User Agent. In the multiple forwarding case the order of the provided addresses shall be indicated and the address of the originator MMS User Agent shall be marked, if present.

NOTE: The address of the last forwarding MMS User Agent is carried in other addressing elements.

Version: The MMS protocol shall provide unique means to identify the current version in the particular protocol environment.

Content adaptation restriction: The originator may request that the content of the MM will not be subjected to content adaptation.

Content Information: The originator may provide information about the nature of the content in the message. The content information could be in terms of indications that:

- classifies content of the MM based on e.g. media types/formats, size, presentation formats [85]
- the MM contains DRM-protected content

In case of conflict with the adaptation restriction provided by the originator, DRM-protection rules in content adaptation shall prevail over the adaptation restriction.

Applic-ID: This information element specifies the identification of the application that the routed forward MM is intended for. Its value shall equal the Applic-ID value of the MM which is being routed forward with this MM4_forward.REQ.

Reply-Applic-ID: If present, this information element indicates a “reply path” to this MM, i.e. the identifier of the application to which a destination application shall address reply-MMs if any. The Reply-Applic-ID value shall equal the Reply-Applic-ID value of the MM which is being routed forward with this MM4_forward.REQ.

Aux-Applic-Info: If present, this information element indicates additional application/implementation specific control information (cf. 7.1.18.1). The Aux-Applic-Info value shall equal the Aux-Applic-Info value of the MM which is being routed forward with this MM4_forward.REQ. **Applic-ID:** This information element specifies the identification of the application that the routed forward MM is intended for. Its value shall equal the Applic-ID value of the MM which is being routed forward with this MM4_forward.REQ.

Reply-Applic-ID: If present, this information element indicates a “reply path” to this MM, i.e. the identifier of the application to which a destination application shall address reply-MMs if any. The Reply-Applic-ID value shall equal the Reply-Applic-ID value of the MM which is being routed forward with this MM4_forward.REQ.

Aux-Applic-Info: If present, this information element indicates additional application/implementation specific control information (cf. 7.1.17.1). The Aux-Applic-Info value shall equal the Aux-Applic-Info value of the MM which is being routed forward with this MM4_forward.REQ.

Originator-Sytem-Address: This information element contains the Address of the origination MMS Relay/Server. This address shall be used by the recipient MMS Relay/Server to return the MM4_forward.RES if requested by the originating MMS Relay/Server. This information shall be present if the Acknowledgement Request information element is present in the MM4_forward.REQ.

8.4.1.4 Information Elements

Table 41: Information elements in the MM4_forward.REQ.

Information element	Presence	Description
3GPP MMS Version	Mandatory	The MMS version of the originator MMS Relay/Server as defined by the present document.
Message Type	Mandatory	The type of message used on reference point MM4: “MM4_forward.REQ”.
Transaction ID	Mandatory	The identification of the MM4_forward.REQ/ MM4_forward.RES pair.
Message ID	Mandatory	The identification of the MM.
Recipient(s) address	Mandatory	The address(es) of the MM recipient(s). Multiple addresses are possible.
Sender address	Mandatory	The address of the MMS User Agent that most recently handled the MM, i.e. that either submitted or forwarded the MM. If the originator MMS User Agent has requested her address to be hidden from the recipient her address shall not be provided to the recipient.
Content type	Mandatory	The content type of the MM’s content.
Message class	Conditional	The class of the MM (e.g., personal, advertisement, information service) if specified by the originator MMS User Agent
Date and time	Mandatory	The time and date of the most recent handling (i.e. either submission or forwarding) of the MM by an MMS User Agent (time stamp).
Time of Expiry	Conditional	The desired time of expiry for the MM if specified by the originator MMS User Agent (time stamp).
Delivery report	Conditional	A request for delivery report if the originator MMS User Agent has requested a delivery report for the MM.
Originator R/S delivery report	Conditional	A request for delivery report that, when set to “Yes”, means the originator MMS Relay/Server has requested a delivery report for the MM. Interpret as “No” in the absence of this Information element.
Priority	Conditional	The priority (importance) of the message if specified by the originator MMS User Agent.
Sender visibility	Conditional	A request to show or hide the sender's identity when the message is delivered to the MM recipient if the originator MMS User Agent has requested her address to be hidden from the recipient.
Read reply	Conditional	A request for read reply report if the originator MMS User Agent has requested a read-reply report for the MM..
Subject	Conditional	The title of the whole MM if specified by the originator MMS User Agent.
Acknowledgement Request	Optional	Request for MM4_forward.RES
Forward_counter	Conditional	A counter indicating the number of times the particular MM was forwarded by a forwarding MMS User Agent.
Previously-sent-by	Optional	In case of forwarding this information element contains one or more address(es) of MMS User Agent(s) that handled (i.e. forwarded or submitted) the MM prior to the MMS User Agent whose address is contained in the Sender address information element. The order of the addresses provided shall be marked. The address of the originator MMS User Agent shall be marked, if present.
Previously-sent-date-and-time	Optional	The date(s) and time(s) associated with submission and forwarding event(s) prior to the last handling of the MM by an MMS User Agent (time stamps).
Applic-ID	Optional	Identification of the destination application.
Reply-Applic-ID	Optional	Identification of a “reply-path” to this MM.
Aux-Applic-Info	Optional	Auxiliary application addressing information.
Content Class	Optional	Classifies the content of the MM to the smallest content class to which the message belongs [85]
DRM Content	Optional	Indicates if the MM contains DRM-protected content
Adaptations	Optional	Indicates if the originator allows adaptation of the content (default True)
Originator-Sytem-Address	Conditional	This information element indicates the Address of the

		origination MMS Relay/Server. This information shall be present if the Acknowledgement Request information element is present in the MM4_forward.REQ.
Content	Conditional	The unaltered content of the multimedia message if specified by the originator MMS User Agent.

Table 42: Information elements in the MM4_forward.RES.

Information element	Presence	Description
3GPP MMS Version	Mandatory	The MMS version of the recipient MMS Relay/Server as defined by the present document.
Message Type	Mandatory	The type of message used on reference point MM4: "MM4_forward.RES".
Transaction ID	Mandatory	The identification of the MM4_forward.REQ/ MM4_forward.RES pair.
Message ID	Mandatory	The Message ID of the MM which has been forwarded within the corresponding MM4_forward.REQ
Request Recipients	Conditional	List of recipients to whom the Request Status value applies. If this element is absent the Request Status value is applicable to all recipients of the corresponding MM4_forward.REQ
Request Status	Mandatory	The status of the request to route forward the MM.
Request Status text	Optional	Status text corresponding to the Request Status

8.4.2 Routing Forward of a Delivery Report

This part of MMS service covers the routing forward of a delivery report from recipient MMS Relay/Server to originator MMS Relay/Server. The involved abstract messages are outlined in the table below from type and direction points of view.

Table 43: Abstract messages for routing delivery reports forward in MMS

Abstract Message	Type	Direction
MM4_delivery_report.REQ	Request	Recipient MMS Relay/Server -> originator MMS Relay/Server
MM4_delivery_report.RES	Response	Originator MMS Relay/Server -> recipient MMS Relay/Server

8.4.2.1 Normal Operation

After successful discovery of its peer entity the recipient MMS Relay/Server shall route a previously created delivery report forward to the originator MMS Relay/Server using the MM4_delivery_report.REQ which contains MMS control information only. The originator MMS Relay/Server shall respond with a MM4_delivery_report.RES, which provides the status of the MM4_delivery_report.REQ if an MM4_delivery_report.RES was requested.

Support for MM4_delivery_report.REQ and MM4_delivery_report.RES is mandatory for the MMS Relay/Server.

8.4.2.2 Abnormal Operation

In this case the originator MMS Relay/Server shall respond with a MM4_delivery_report.RES encapsulating a status which indicates the reason the delivery report was not accepted, if an MM4_delivery_report.RES was requested.

8.4.2.3 Features

Addressing: Both the address of the recipient (which is the MM originator) and the address of the originator (which is the MM recipient) of a routed forward delivery report shall be provided to the originator MMS Relay/Server in the addressing-relevant information field of MM4_delivery_report.REQ.

Identification: In the MM4_delivery_report.REQ the recipient MMS Relay/Server shall always provide the original message identification of the MM that the delivery report corresponds to as obtained from the associated MM4_forward.req.

MM Time stamping: The MM4_delivery_report.REQ shall carry the time and date of handling of the MM (e.g. retrieval, expiry, rejection)**.**

MM Status: The MM4_delivery_report.REQ shall carry the status of the MM delivery, e.g. retrieved, rejected, expired or indeterminate. The MM Status Extension may be used to provide more granularity. The status code may be supported with an explanatory text to further qualify the status of the MM delivery (e.g. recipient does not support MMS, recipient address unresolved, MM is too big, if/what content adaptation took place, address where the MM was forwarded).

Acknowledgement Request: The recipient MMS Relay/Server may request a MM4_delivery_report.RES from the originator MMS Relay/Server acknowledging the successful reception of the delivery report.

Forward To originator UA: The recipient MMS Relay/Server shall indicate if the originator MMS Relay/Server is allowed to forward the Delivery Report to the originator MMS User Agent.

Request Status: The originator MMS Relay/Server shall indicate the status of the MM4_delivery_report.REQ in the associated MM4_delivery_report.RES if requested.

Version: The MMS protocol shall provide unique means to identify the current version in the particular protocol environment.

Message Type: The type of message used on reference point MM4 indicating MM4_delivery_report.REQ and MM4_delivery_report.RES as such.

Transaction Identification: If the originator MMS Relay/Server requests an MM4_delivery_report.RES from the recipient MMS Relay/Server it shall provide a transaction identification within an MM4_delivery_report.REQ. The MM4_delivery_report.RES shall unambiguously refer to the corresponding MM4_delivery_report.REQ using the same transaction identification.

Applic-ID: This information element indicates the identification of the application that the delivery report is intended for. The recipient MMS Relay/Server shall insert this Applic-ID in a MM4_delivery_report.REQ if an Applic-ID was present in the corresponding original MM. If a Reply-Applic-ID was indicated in the corresponding original MM, the Applic-ID value shall equal that Reply-Applic-ID value. Otherwise, its value shall equal the Applic-ID value that was indicated in the corresponding original MM.

Reply-Applic-ID: If present, this information element indicates the application that the original MM was delivered to. The recipient MMS Relay/Server shall insert this Reply-Applic-ID if the values of Applic-ID and Reply-Applic-ID in the corresponding original MM differ. Its value shall equal the Applic-ID value that was indicated in the corresponding original MM.

Aux-Applic-Info: If present, this information element indicates additional application/implementation specific control information (cf. 7.1.18.1). The recipient MMS Relay/Server shall insert this Aux-Applic-Info if Aux-Applic-Info was present in the corresponding original MM. Its value shall equal the Aux-Applic-Info value that was indicated in the corresponding original MM.

8.4.2.4 Information Elements

Table 44: Information elements in the MM4_delivery_report.REQ.

Information element	Presence	Description
3GPP MMS Version	Mandatory	The MMS version of the recipient MMS Relay/Server as defined by the present document.
Message Type	Mandatory	The type of message used on reference point MM4: " MM4_delivery_report.REQ".
Transaction ID	Mandatory	The identification of the MM4_delivery_report.REQ/ MM4_delivery_report.RES pair.
Message ID	Mandatory	The identification of the original MM.
Recipient address	Mandatory	The address of the MM recipient of the original MM.
Sender address	Mandatory	The address of the MM originator of the original MM.
Date and time	Mandatory	Date and time the MM was handled (retrieved, expired, rejected, etc.) (time stamp).
Acknowledgement Request	Optional	Request for MM4_delivery_report.RES
Forward to Originator UA	Optional	If "No", indicates that the originator MMS Relay/Server shall not forward the Delivery Report to the originator MMS User Agent. The value "No" is only used when the recipient User Agent refuses a delivery report or when the originator User Agent has not requested a delivery report. Interpret as "Yes" in the absence of this Information element.
MM Status	Mandatory	Status of the MM, e.g. retrieved, expired, rejected
MM Status Extension	Optional	Extension of the MM Status, to provide more granularity.
MM Status text	Optional	Text description of the status for display purposes, should qualify the MM Status
Applic-ID	Optional	The identification of the originating application of the original MM.
Reply-Applic-ID	Optional	The identification of the destination application of the original MM.
Aux-Applic-Info	Optional	Auxiliary application addressing information as indicated in the original MM.

Table 45: Information elements in the MM4_delivery_report.RES.

Information element	Presence	Description
3GPP MMS Version	Mandatory	The MMS version of the recipient MMS Relay/Server as defined by the present document.
Message Type	Mandatory	The type of message used on reference point MM4: "MM4_delivery_report.RES".
Transaction ID	Mandatory	The identification of the MM4_delivery_report.REQ/ MM4_delivery_report.RES pair.
Message ID	Mandatory	The Message ID of the MM which caused the delivery report
Request Status	Mandatory	The status of the associated MM4_delivery_report.REQ.
Request Status text	Optional	The text explanation corresponding to the Request Status

8.4.3 Routing Forward of a Read-Reply Report

This part of MMS service covers the routing forward of a read-reply report from the recipient MMS Relay/Server to the originator MMS Relay/Server. The involved abstract messages are outlined in the table below from type and direction points of view.

Table 46: Abstract messages for sending and receiving read-reply reports in MMS

Abstract messages	Type	Direction
MM4_read_reply_report. REQ	Request	Recipient MMS Relay/Server -> originator MMS Relay/Server
MM4_read_reply_report. RES	Response	Originator MMS Relay/Server -> recipient MMS Relay/Server

8.4.3.1 Normal Operation

After successful discovery of its peer entity the recipient MMS Relay/Server shall route a read-reply report forward, that has been previously submitted by the recipient MMS User Agent, to the originator MMS Relay/Server using the MM4_read_reply_report.REQ which contains MMS control information only. The recipient MMS Relay/Server shall respond with a MM4_read_reply_report.RES, which provides the status of the MM4_read_reply_report.REQ if an MM4_read_reply_report.RES was requested.

Support for MM4_read_reply_report.REQ and MM4_read_reply_report.RES is mandatory for the MMS Relay/Server.

8.4.3.2 Abnormal Operation

In this case the originator MMS Relay/Server shall respond with a MM4_read_reply_report.RES encapsulating a status which indicates the reason the read-reply report was not accepted, if an MM4_read_reply_report.RES was requested.

8.4.3.3 Features

Addressing: Both, the address of the recipient (which is the MM originator) and the address of the originator (which is the MM recipient) of a routed forward read-reply report shall be provided to the originator MMS Relay/Server in the addressing-relevant information field of MM4_read_reply_report.REQ.

Identification: In the MM4_read_reply_report.REQ the recipient MMS Relay/Server shall always provide the original message identification of the MM that the read-reply report corresponds to as obtained from the associated MM4_forward.req.

MM Time Stamping: The MM4_read_reply_report.REQ shall carry the time-stamp associated with the read-reply report**.**

Read Status: The MM4_read_reply_report.REQ shall carry the status of the MM handling, e.g. read or without being read.

Acknowledgement Request: The recipient MMS Relay/Server may request a MM4_read_reply_report.RES from the originator MMS Relay/Server acknowledging the successful reception of the read-reply report.

Request Status: The originator MMS Relay/Server shall indicate the status of the MM4_read_reply_report.REQ in the associated MM4_read_reply_report.RES if requested.

Version: The MMS protocol shall provide unique means to identify the current version in the particular protocol environment.

Message Type: The type of message used on reference point MM4 indicating MM4_read_reply_report.REQ and MM4_read_reply_report.RES as such.

Transaction Identification: If the originator MMS Relay/Server requests an MM4_read_reply_report.RES from the recipient MMS Relay/Server it shall provide a transaction identification within an MM4_read_reply_report.REQ. The MM4_read_reply_report.RES shall unambiguously refer to the corresponding MM4_read_reply_report.REQ using the same transaction identification.

Applic-ID: This information element indicates the identification of the application that the read-reply report is intended for. If a Applic-ID was indicated in the corresponding MM1_read_reply_recipient.REQ, the Applic-ID value shall equal that Applic-ID value.

Reply-Applic-ID: If present, this information element indicates the application that the original MM was delivered to. If a Reply-Applic-ID was present in the corresponding MM1_read_reply_recipient.REQ, the Reply-Applic-ID value shall equal that Reply-Applic-ID value.

Aux-Applic-Info: If present, this information element indicates additional application/implementation specific control information (cf. 7.1.18.1). It shall be present if Aux-Applic-Info was indicated in the corresponding MM1_read_reply_recipient.REQ, in which case its value shall equal the Aux-Applic-Info value that was indicated in the corresponding original MM.

8.4.3.4 Information Elements

Table 47: Information elements in the MM4_read_reply_report.REQ.

Information element	Presence	Description
3GPP MMS Version	Mandatory	The MMS version of the recipient MMS Relay/Server as defined by the present document.
Message Type	Mandatory	The type of message used on reference point MM4: “MM4_read_reply_report.REQ”.
Transaction ID	Mandatory	The identification of the MM4_read_reply_report.REQ/ MM4_read_reply_report.RES pair.
Recipient address	Mandatory	The address of the MM recipient of the original MM, i.e. the originator of the read-reply report.
Sender address	Mandatory	The address of the MM originator of the original MM, i.e. the recipient of the read-reply report.
Message ID	Mandatory	The message ID of the original MM.
Date and time	Mandatory	Date and time the MM was handled (read, deleted without being read, etc.) (time stamp)
Acknowledgement Request	Optional	Request for MM4_read_reply_report.RES
Read Status	Mandatory	Status of the MM, e.g. Read, Deleted without being read
Read Status text	Optional	The text explanation corresponding to the Read Status
Applic-ID	Optional	The identification of the originating application of the original MM.
Reply-Applic-ID	Optional	The identification of the destination application of the original MM.
Aux-Applic-Info	Optional	Auxiliary application addressing information.

Table 48: Information elements in the MM4_read_reply_report.RES.

Information element	Presence	Description
3GPP MMS Version	Mandatory	The MMS version of the recipient MMS Relay/Server as defined by the present document.
Message Type	Mandatory	The type of message used on reference point MM4: “MM4_read_reply_report.RES”.
Transaction ID	Mandatory	The identification of the MM4_read_reply_report.REQ/ MM4_read_reply_report.RES pair.
Request Status	Mandatory	The status of the associated MM4_read_reply_report.REQ.
Request Status text	Optional	The textual explanation for the Request Status

8.4.4 Message format on MM4

All elements of an MM shall be included within a single SMTP "mail" message which shall be organised as MIME message with the appropriate 'Content-Type' [44] header field value (e.g. multipart/related, multipart/mixed, image/jpeg, text/plain). All MM elements shall be of standard MIME content types. In addition to the MM elements this SMTP "mail" message should reflect all MMS information elements according to the definitions in clauses 6 and 8.4.

All other MMS-related messages, such as delivery reports, read-reply reports, transfer acknowledgements shall each be transferred as a single SMTP "mail" message which shall be organised as MIME type text/plain. This SMTP "mail" message should reflect all MMS information elements as defined above.

8.4.4.1 Message header fields

MMS information elements should be reflected as "header fields" according to STD 11 [5] in the SMTP "mail" message. See RFC 1327 [53] for a detailed description of the X.400 header to STD 11 headers mappings. Some of the mappings are context dependent.

For those information elements that cannot be mapped to standard STD 11 "header fields" the "X-" extensions mechanism shall be used with an "X-MMS-" prefix.

The mapping of information elements to commonly used (RFC 1327) [53] or standard STD 11 "header fields" is shown in following tables.

8.4.4.2 MM4_Forward.REQ Header Mappings

The MM4 Forward request header mappings are detailed below.

Table 49: MM4_Forward.REQ Information Elements to STD 11 Header Mappings

Information element	STD 11 Headers
3GPP MMS Version	X-Mms-3GPP-MMS-Version:
Message Type	X-Mms-Message-Type:
Transaction ID	X-Mms-Transaction-ID:
Message ID	X-Mms-Message-ID:
Recipient(s) address	To:, Cc: , Bcc:
Sender address	From:
Content type	Content-Type:
Message class	X-Mms-Message-Class:
Date and time	Date:
Time of Expiry	X-Mms-Expiry:
Delivery report	X-Mms-Delivery-Report:
Originator R/S delivery report	X-Mms-Originator-R/S-Delivery-Report
Priority	X-Mms-Priority:
Sender visibility	X-Mms-Sender-Visibility:
Read reply	X-Mms-Read-Reply:
Subject	Subject:
Acknowledgement Request	X-Mms-Ack-Request:
Forward counter	X-Mms-Forward-Counter:
Previously-sent-by	X-Mms-Previously-sent-by:
Previously-sent-date and-time	X-Mms-Previously-sent-date-and-time:
Applic-ID	X-Mms-Applic-ID
Reply-Applic-ID	X-Mms-Reply-Applic-ID
Aux-Applic-Info	X-Mms-Aux-Applic-Info
Content Class	X-Mms-Content-Class:
DRM Content	X-Mms-Drm-Content:
Adaptations	X-Mms-Adaptation-Allowed:
Originator-Sytem-Address	X-Mms-Originator-System
Content	*<message body>*
-	Sender:
-	Message-ID:

The table above indicates the mappings from MM4_Forward.REQ information elements to the corresponding STD 11 [5] headers.

The MM4 information element Message ID is not directly mapped to a corresponding STD 11 "Message-ID:" header. Each STD 11 message must have a unique message id, which is carried in the "Message-ID:" header.

Content-type maps directly since both are defined as being MIME content types as specified in RFC 2046 [6].

The STD 11 "From:" header is determined by the mail user agent, or, in this case, the MMS User Agent. This corresponds to the MM4 information element Sender address, as set by the MMS User Agent or MMS Relay/Server.

STD 11 messages are required to have a "Sender:" header that indicates the originator address (as determined by the SMTP "MAIL From" command).

The STD 11 “X-Mms-Originator-System:” header shall be used to indicate the system address that the recipient MMS Relay/Server shall use as the recipient address with MM4_Forward.RES.

In case there are only blind carbon-copy recipient(s) (“Bcc:”), the behaviour shall be as recommended by RFC2821 [22], Appendix B, i.e. the originating MMS Relay/Server shall only insert an empty “Bcc:” header and no “To:” or “Cc:” headers. The recipient(s) shall then only be indicated in the SMTP command layer (RCPT TO:).

In case there are both “To:” / “Cc:” and “Bcc:” recipients, the “Bcc:” headers shall be removed by the originating MMS Relay/Server and the “Bcc:” recipients shall only be indicated in the SMTP command level (RCPT TO:). This is in accordance with the functionality recommended by RFC2821 [22], Appendix B.

8.4.4.3 MM4_Forward.RES Header Mappings

The MM4 Forward response information element mappings are detailed in the table below.

The transmission of the Forward Response from the recipient MMS Relay/Server requires a properly addressed STD 11 message. While the addressing of the MM4_Forward.REQ is clearly that of the intended recipients and originator, the MM4_Forward.RES addressing is related to neither the recipients nor the originator of the original MM. Instead, the MM4_Forward.RES addressing is based on the MMS Relay/Server system address as provided in the MM4_Forward.REQ via the X-Mms-Originator-System header.

The STD 11 “To:” header value shall be according to the STD 11 “X-Mms-Originator-System:” header value provided in MM4_Forward.REQ.

Table 50: MM4_Forward.RES Information Elements to STD 11 Header Mappings

Information element	STD 11 Header
3GPP MMS Version	X-Mms-3GPP-MMS-Version:
Message Type	X-Mms-Message-Type:
Transaction ID	X-Mms-Transaction-ID:
Message ID	X-Mms-Message-ID:
Request Status	X-Mms-Request-Status-Code:
Request Status text	X-Mms-Status-Text:
Request Recipients	X-Mms-Request-Recipients
-	Sender:
-	To:
-	Message-ID:
-	Date:

The STD 11 "Sender: " and "To:" headers contain system addresses as described above, and do not map to MM4_Forward.RES information elements. The STD 11 message requires a "Date:" header, but there currently is no corresponding MM4_Forward.RES information element.

8.4.4.4 MM4_Delivery_report.REQ Header Mappings

The mappings of the MM4_Delivery_report.REQ information elements to STD 11 headers is detailed in the table below.

Table 51: MM4_Delivery_report.REQ Information Elements to STD 11 Header Mappings

Information element	STD 11 Header
3GPP MMS Version	X-Mms-3GPP-MMS-Version:
Message Type	X-Mms-Message-Type:
Transaction ID	X-Mms-Transaction-ID:
Message ID	X-Mms-Message-ID:
Recipient address	From:
Sender address	To:
Date and time	Date:
Acknowledgement Request	X-Mms-Ack-Request:
Forward to Originator UA	X-Mms-Forward-To-Originator-UA
MM Status	X-Mms-MM-Status-Code:
MM Status Extension	X-Mms-MM-Status-Extension
MM Status Text	X-Mms-Status-text:
Applic-ID	X-Mms-Applic-ID
Reply-Applic-ID	X-Mms-Reply-Applic-ID
Aux-Applic-Info	X-Mms-Aux-Applic-Info
-	Sender:
-	Message-ID:

The meaning of Recipient address is that of the original MM, from whose MMS User Agent this Delivery-report is being generated. The meaning of Sender address is that of the original MM, to whom the Delivery-report is being sent.

The value of the STD 11 "Sender:" header is the system address, to which the corresponding response will be sent.

The STD 11 "Sender:" header value is automatically set to the system address of the MMS Relay/Server.

The STD 11 "Message-ID:" value is automatically generated by the MMS Relay/Server, in conformance to STD 11 [5].

The other header mappings from information elements are similar to those already described above.

8.4.4.5 MM4_Delivery_report.RES Header Mappings

The mappings of the M4_Delivery_report.RES information elements to STD 11 headers is detailed in the table below.

Table 52: MM4_Delivery_report.RES Information Elements to STD 11 Header Mappings

Information element	STD 11 Header
3GPP MMS Version	X-Mms-3GPP-MMS-Version:
Message Type	X-Mms-Message-Type:
Transaction ID	X-Mms-Transaction-ID:
Message ID	X-Mms-Message-ID:
Request Status	X-Mms-Request-Status-Code:
Request Status text	X-Mms-Status-Text:
-	Sender:
-	To:
-	Message-ID:
-	Date:

The STD 11 "Sender:" header value is automatically set to the system address of the MMS Relay/Server that is replying to the MM4_Delivery_report.REQ.

The STD 11 "To:" header value of the MM4_Delivery_report.RES abstract message is obtained from the STD 11 "Sender:" header value of the corresponding MM4_Delivery_report.REQ.

The STD 11 "Date" and "Message-ID:" headers, which have no corresponding MM4_Forward.RES information elements, are automatically provided values by the MMS Relay/Server.

8.4.4.6 MM4_Read_reply_report.REQ Header Mappings

The mappings of the MM4_Read_reply_report.REQ information elements to STD 11 headers is detailed in the table below.

Table 53: MM4_Read_reply_report.REQ Information Elements to STD 11 Header Mappings

Information element	STD 11 Header
3GPP MMS Version	X-Mms-3GPP-MMS-Version:
Message Type	X-Mms-Message-Type:
Transaction ID	X-Mms-Transaction-ID:
Recipient address	From:
Sender address	To:
Message ID	X-Mms-Message-ID:
Date and time	Date:
Acknowledgement Request	X-Mms-Ack-Request:
Read Status	X-Mms-Read-Status:
Read Status text	X-Mms-Status-Text:
Applic-ID	X-Mms-Applic-ID
Reply-Applic-ID	X-Mms-Reply-Applic-ID
Aux-Applic-Info	X-Mms-Aux-Applic-Info
-	Sender:
-	Message-ID:
-	Date:

The meaning of Recipient address is that of the original MM, from whose MMS User Agent this Read-reply-report is being generated. The meaning of Sender address is that of the original MM, to whom the Read-reply-report is being sent.

The value of the Sender: header is a system address, to which the corresponding MM4_Read_reply_report.RES shall be sent.

The "Message-ID:", and "Date:" headers, which have no corresponding information element in the MM4_Read_reply_report.REQ, are automatically provided appropriate values by the MMS Relay/Server.

8.4.4.7 MM4_Read_reply_report.RES Header Mappings

The mappings of the MM4_Read_reply_report.RES information elements to STD 11 headers is detailed in the table below.

Table 54: MM4_Read_reply_report.RES Information Elements to STD 11 Header Mappings

Information element	STD 11 Header
3GPP MMS Version	X-Mms-3GPP-MMS-Version:
Message Type	X-Mms-Message-Type:
Transaction ID	X-Mms-Transaction-ID:
Request Status	X-Mms-Request-Status-Code:
Request Status text	X-Mms-Status-Text:
-	Sender:
-	To:
-	Message-ID:
-	Date:

The STD 11 "Sender:" header value shall be the system address of the MMS Relay/Server that is replying to the MM4_Read_reply_report.REQ.

The STD 11 "To:" header value of the MM4_Delivery_report.RES abstract message shall be obtained from the corresponding MM4_Read-reply_report.REQ Sender: header value.

The STD 11 "Date:" and "Message-ID:" headers, which do not have corresponding information elements, shall be provided appropriate values automatically by the MMS Server/Relay.

8.4.4.8 Header Field Value Range

MMS information elements that are mapped to standard STD 11 "header fields", i.e. which do not have an "X-Mms-" prefix, should be used according to [5].

The rest of the header definitions used in this clause, including the mechanisms and pre-defined tokens, are described in an augmented Backus-Naur Form (BNF) defined in [48], similar to that used by RFC 2822 [5]. Implementers will need to be familiar with the notation in order to understand these definitions.

For the residual MMS information elements the following applies:

X-Mms-3GPP-MMS-Version:

```
3GPP-MMS-Version = "X-Mms-3GPP-MMS-Version" ":"  1*DIGIT "." 1*DIGIT "."
1*DIGIT
```

Note that the numbers MUST be treated as separate integers and that each may be incremented higher than a single digit. Thus, 2.1.4 is a lower version than 2.1.13, which in turn is lower than 2.3.0 Leading zeros shall be ignored by recipient MMS Relay/Server and shall NOT be sent. The version is according to the version of the present document (see also clause "Foreword").

X-Mms-Message-Type:

```
Message-type = "X-Mms-Message-Type" ":" ( "MM4_forward.REQ" |
"MM4_forward.RES" | "MM4_delivery_report.REQ" | "MM4_delivery_report.RES" |
"MM4_read_reply_report.REQ" | "MM4_read_reply_report.RES" )
```

X-Mms-Transaction-Id:

```
Transaction-id =  "X-Mms-Transaction-ID" ":" quoted-string
```

X-Mms-Message-Id:

```
Message-id =  "X-Mms-Message-ID" ":" quoted-string
```

X-Mms-Message-Class:

```
Message-class = "X-Mms-Message-Class" ":" ( Class-identifier | quoted-string
)

Class-identifier = "Personal" | "Advertisement" | "Informational" | "Auto"
```

X-Mms-Expiry:

```
Expiry-value = "X-Mms-Expiry" ":" ( HTTP-date | delta-seconds )
```

X-Mms-Delivery-Report:

```
Delivery-report =  "X-Mms-Delivery-Report" ":" ( "Yes" | "No" )
```

X-Mms-Originator-R/S-Delivery-Report:

```
Originator-R/S-Delivery-Report =  "X-Mms-Originator-R/S-Delivery-Report" ":"
( "Yes" | "No" )
```

X-Mms-Priority:

```
Priority = "X-Mms-Priority" ":" ( "Low" | "Normal" | "High" )
```

X-Mms-Sender-Visibility:

```
Sender-visibility = "X-Mms-Sender-Visibility" ":" ( "Hide" | "Show" )
```

X-Mms-Read-Reply:

```
Read-reply = "X-Mms-Read-Reply" ":" ( "Yes" | "No" )
```

X-Mms-Ack-Request:

```
Ack-Request = "X-Mms-Ack-Request" ":" ( "Yes" | "No" )
```

X-Mms-Forward-To-Originator-UA:

```
Forward-To-Originator-UA = "X-Mms-Forward-To-Originator-UA" ":" ( "Yes" |
"No" )
```

X-Mms-Request-Status-Code:

```
Request-status-Code =  "X-Mms-Request-Status-Code" ":" ( "Ok" | "Error-
unspecified" | "Error-service-denied" | "Error-message-format-corrupt" |
"Error-sending-address-unresolved" | "Error-message-not-found" | "Error-
network-problem" |   "Error-content-not-accepted" | "Error-unsupported-
message" )
```

The meaning of the X-Mms-Request-Status-Code header field is further described in section 8.4.4.10 of this specification.

X-Mms-MM-Status-Code:

```
MM-Status-Code = "X-Mms-MM-Status-Code" ":" ( "Expired" | "Retrieved" |
"Rejected" | "Deferred" | "Indeterminate" | "Forwarded" | "Unrecognised" )
```

X-Mms-MM-Status-Extension:

```
MM-Status-Extension =  "X-Mms-MM-Status-Extension" ":" ( "Rejection-By-MMS-
Recipient" | "Rejection-by-Other-RS" )
```

The meaning of the X- Mms-Status-Extension header field is further described in section 8.4.4.11 of this specification.

X-Mms-Read-Status:

```
Read-Status = "X-Mms-Read-Status" ":" ( "Read" | "Deleted without being read" )
```

X-Mms-Forward-Counter

```
Forward-Counter = "X-Mms-Forward-Counter" ":" 1*DIGIT
```

X-Mms-Previously-sent-by

```
Previously-sent-by = "X-Mms-Previously-sent-by" ":" 1*DIGIT "," mailbox
```

The address should be machine-usable, as defined by "mailbox" in RFC 2822 [5].

NOTE: The number indicates the chronological order of the submission and forwarding event(s). The number "0" is associated with the submission of the MM. A higher number indicates an event at a later point in time.

X-Mms-Previously-sent-date-and-time

```
Previously-sent-date-and-time = "X-Mms-Previously-sent-date-and-time" ":"
1*DIGIT "," HTTP-date
```

The date should be machine-usable, as defined by "HTTP-date" in RFC 2616 [48].

NOTE: The number indicates the chronological order of the submission and forwarding events. The number "0" is associated with the submission of the MM. The number indicates the correspondence to the MMS User Agent's address in the "X-Mms-Previously-sent-by" header field with the same number.

X-Mms-Applic-ID

```
Applic-ID = "X-Mms-Applic-ID" ":" application-id | quoted-string
```

X-Mms-Reply-Applic-ID

```
Reply-Applic-ID = "X-Mms-Reply-Applic-ID" ":" application-id | quoted-string
```

X-Mms-Aux-Applic-Info

```
Aux-Applic-Info = "X-Mms-Aux-Applic-Info" ":" application-id | quoted-string

application-id = manufacture_domain [1*(package-name)] class-name

manufacture_domain = 1*applicationID-symbol "."

package-name = 1*applicationID-symbol "."

class-name = 1*applicationID-symbol

applicationID-symbol = ALPHA | DIGIT |"."|"_"
```

X-Mms-Content-Class:

```
Content-class = "X-Mms-Content-Class" ":" ("text" | "image-basic" | "image-
rich" | "video-basic" | "video-rich" | "megapixel" | "content-basic" |
"content-rich")
```

X-Mms-Drm-Content:

```
Drm-content =  "X-Mms-Drm-Content" ":" ( "Yes" | "No" )
```

X-Mms-Adaptation-Allowed:

```
Adaptations =  "X-Mms-Adaptation-Allowed" ":" ( "Yes" | "No" )
```

X-Mms-Request-Recipients:

```
X-Mms-Request-Recipients = X-Mms-Request-Recipients ":" MMS-address *("," MMS-
address)
```

Note: The X-Mms-Request-Recipients header contains a comma separated list of the recipient(s) MMS-addresses to whom the status code in the X-Mms-MM-Status-Code header applies. The encoding of MMS-address is defined in section 8.4.5.1.

8.4.4.9 Message Encoding on MM4

The SMTP "mail" message shall be encoded according to STD 11 [5].

8.4.4.10 Request Status Codes Clarification

The table below dictates how the originator MMS Relay/Server should interpret the possible values of the X-Mms-Request-Status-Code header field.

Table 55: Clarification of the Request Status Codes

X-Mms-Request-Status-Code	Meaning
Ok	The corresponding request and some or all of its contents were accepted without errors.
Error-unspecified	An unspecified error occurred during the processing or reception of the corresponding request.
Error-service-denied	The corresponding request was rejected due to failure of authentication or authorisation of the originating MMS Relay/Server.
Error-message-format-corrupt	An inconsistency with the message format was detected when the corresponding request was parsed.
Error-sending-address-unresolved	There were no MMS address (From:, To:, Cc:, Bcc:) in its proper format or none of the addresses belong to the recipient MMS Relay/Server.
Error-message-not-found	This status code is obsolete
Error-network-problem	The recipient MMS Relay/Server was not able to accept the corresponding request due to capacity overload.
Error-content-not-accepted	The MM content was not accepted due to size, media type, copyrights or some other reason.
Error-unsupported-message	The recipient MMS Relay/Server does not support the corresponding request abstract message.

8.4.4.11 MM-Status-Extension

The table below indicates how the originator MMS Relay/Server should interpret the possible values of the X-Mms-MM-Status-Extension header field.

Table 56: MM Status Extension

X-Mms-MM-Status-Extension	Meaning
Rejection-by-mms-recipient	The corresponding MM-Status request was rejected because the intended recipient refused to receive a message (i.e., recipient does not want to retrieve).
Rejection-by-other-rs	The corresponding MM-Status request was rejected because the MMS Relay/Server of the intended recipient refused to receive the message.

8.4.5 Message Transfer Protocol on MM4

Interworking between different MMSEs shall be based on SMTP according to STD 10 [22] as depicted in figure 5.

8.4.5.1 Addressing

The originator MMS Relay/Server shall derive the sender address to be used in the SMTP "MAIL FROM:" command from the originator address as indicated in the corresponding MM/abstract message and shall derive the recipient(s) address(es) to be used in the SMTP "RCPT TO:" command from the recipient(s) address(es) as indicated in the corresponding MM/abstract message.

The table below provides a summary of the addresses used on both message level and message transport level for all abstract messages supported on the MM4 interface.

Table 57: MM4 Addressing on Message and Message Transport Level

Message Type	Message Level Addressing				Transport Level Addressing	
	From header	Sender header	To, Cc, Bcc header	X-Mms-Originator-System header	MAIL FROM command	RCPT TO command
MM4_forward. REQ	Originator MMS-address	Originator SMTP-address	Recipient(s) MMS-address(es)	Originator MMS Relay/Server SMTP address	Originator SMTP-address	Recipient SMTP-address(es)
MM4_forward. RES	-	Recipient MMS Relay/Server system-address	Originator MMS Relay/Server system-address	-	Recipient MMS Relay/Server system-addressmailto:	Originator MMS Relay/Server system-addressmailto:
MM4_delivery_ report.REQ	Recipient MMS-address	Recipient MMS Relay/Server system-address	Originator MMS-address	-	Recipient MMS Relay/Server system-address	Originator SMTP- address if the origination user agent has requested the delivery report, Originator system- address if the originating MMS Relay/Server has requested the delivery report.
MM4_delivery_ report.RES	-	Originator MMS Relay/Server system-address	Recipient MMS Relay/Server system-address	-	Originator MMS Relay/Server system-address	Recipient MMS Relay/Server system-address
MM4_read_ reply_report. REQ	Recipient MMS-address	Recipient MMS Relay/Server system-address	Originator MMS-address	-	Recipient MMS Relay/Server system- address	Originator SMTP address
MM4_read_ reply_report. RES	-	O riginator MMS Relay/Server system-address	Recipient MMS Relay/Server system-address	-	Originator MMS Relay/Server system-address	Recipient MMS Relay/Server system-address

If the originator or recipient address on message level contains the originator or recipient MMS Relay/Server system address, then these addresses shall be used on transport level unmodified. MMS Service Provider should configure appropriate system addresses which will be used as both the recipient and originator of these administrative messages.

If the recipient address on message level conforms to the E.164 numbering plan, then the MMS Relay/Server shall apply E.164 address resolution to derive the addresses used on message transport level.

In the case the address resolution returns an RFC 2822 recipient address (ENUM based resolution), this address shall become the ‘forward-path’ argument to the ‘RCPT TO:’ SMTP command as it is described in [22].

In the case the address resolution returns only the domain of the recipient MMSE, then the MMS Relay/Server shall derive the ‘forward-path’ argument to the ‘RCPT TO:’ SMTP command according to the MM4 address model.

If the sender address on message level conforms to the E.164 numbering plan, then the MMS Relay/Server shall derive the ‘reverse-path’ argument to the ‘MAIL FROM:’ SMTP command according to the MM4 address model.

MM4 Address Model:

The MM4 Address Model defines the encoding rules of user addresses used on the MM4 interfaces. The following addresses are defined:

- SMTP-address; the MMS user's address on message transport level (SMTP)
- MMS-address; the MMS user's address on message level
- system-address, the address of user(s) being originator or recipient of administrative messages. This address is used on both message and message transport level.

The following schema defines the encoding of these addresses.

```
system-address = system-user "@" host-subdomain MMSE-domain
```

```
SMTP-address = ( MMS-address "@" MMSE-domain ) | mailbox
                            ; "mailbox" according to the definition
                            ; of STD 10 [22]

MMS-address = ( "+" E.164 "/TYPE=PLMN" ) | mailbox ; "mailbox" according
                                                    ; to the definition of
                                                    ; STD 11 [5]

E.164 = 1*DIGIT

system-user = local-part ; according to the definition of STD 11 [5],
                         ; string identifying the system user being
                         ; originator or recipient of administrative
                         ; messages

host-subdomain = *( dom-fragment "." ) ; subdomain of the MMS
                                       ; Relay/Server host

MMSE-domain = dom-fragment *( "." dom-fragment ) ; domain of the MMSE

dom-fragment = ( ALPHA | DIGIT ) *( ALPHA | DIGIT | "-" )
```

Example:

If the recipient's address is an E.164 number, the recipient address fields used in the MM4_Forward.REQ shall be composed as follows:

RCPT TO:<+E.164/TYPE=PLMN@MMSE-domain>

To: +E.164/TYPE=PLMN

MM4 MMSE Domain Name:
For the addressing of the MMSE on the MM4 interface an unique domain name should be used. To allow inter PLMN DNS translation the MM4 MMSE domain name should be composed as follows:

mms.mnc<MNC>.mcc<MCC>.gprs, where

- <MNC> identifies the network operator. The MNC shall consist of 3 digits. For two digit MNC a "0" digit shall be inserted at the left side [79].
- <MCC> identifies the country of the network operator. The MCC shall consist of 3 digits [79].

In addition to the standardised MM4 MMSE Domain Name network operators may utilise additional public MM4 domain names for the MMSE, e.g. to allow interworking with networks not utilising the E.212 [79] network identification.

If the MMS Relay/Server supports interworking with MMSE(s) identified by the Domain Name specified above ("gprs" TLD) and MMSE(s) identified by public MM4 domain names (generic or ccTLD) in parallel, it shall ensure consistency of the originator's and recipient's domains for messages transferred via the MM4 interface in the following way.

If the recipient MMSE is identified by the MM4 MMSE domain name specified above, the originating MMS Relay/ Server shall identify the originator (SMTP-address) and itself (system-address) utilising the MM4 domain name complying to the definition above.

If the recipient MMSE is identified by a public MM4 domain name, the originating MMS Relay/ Server shall identify the originator (SMTP-address) and itself (system-address utilising the public MM4 domain name.

In addition the MMSE implementation shall take public addressing requirements into account, e.g. for the MMS interworking with external (legacy) messaging systems via the MM3 interface.

MM4 MMS Host Relay/Server Address:

For the addressing of administrative messages on the MM4 interface the hosting MMS Relay/Server needs to be addressed directly. A system-address shall be allocated per MMS Relay/Server by means of a system user address. (system-user@host-subdomain.mmse-domain).

8.4.5.2 Message Transfer

The originator MMS Relay/Server shall use an SMTP connection to transfer MMs/abstract messages.

There are two options to forward MMs with multiple recipients served by the same MMSE via the MM4 interface.

Option 1:

The originating MMS Relay/Server may transfer MMs destined for multiple recipient users served by the same MMSE utilising one MM4_forward.REQ per recipient. Only one SMTP "RCPT TO" command shall be used per message transfer transaction.

For example, if an MMS originator sends an MM to 3 recipients (e.g., To: userA, Cc: userB; Bcc: userC), all served by the same MMS Relay/Server, differing from the originator's MMS Relay/Server; the originator MMS Relay/Server shall send:

an SMTP MM4_Forward.REQ, with RCPT To: = userA,

a different SMTP MM4_Forward.REQ, with RCPT To: = userB,

and another SMTP MM4_Forward.REQ, with RCPT To: = userC.

Option 2:

The originating MMS Relay/Server may transfer MMs destined for multiple recipient users served by the same MMSE utilising one MM4_forward.REQ conveying the message to all relevant recipients. Multiple SMTP "RCPT TO" commands shall be used per message transfer transaction.

If there is one or multiple recipients being transferred by the originator MMS Relay/Server using the SMTP "RCPT TO" command the recipient MMS Relay/Server should accept all recipients with a "250 OK" as indicated in [22]. This will ensure that if the originator MMS Relay/Server requested an acknowledgement the recipient MMS Relay/Server shall send the response. The originator MMS Relay/Server should use SMTP "DATA" command to transfer the message.

8.4.5.3 Other Definitions

Private agreements may utilise additional connection and security (e.g. IPSec) methods. Such methods are out of the scope of standardisation for this release.

8.4.5.2 SMTP Service Extensions

This section specifies the usage of SMTP service extensions [22] over MM4.

The following SMTP service extensions should be supported by the MMS Relay/Server for the interworking over MM4:

- SMTP Service Extension for Message Size Declaration [57]
- SMTP Service Extension for 8bit-MIME transport [58]

8.4.6 Version Handling on MM4

The following rules shall apply when different 3GPP MMS versions are supported on the MM4 Interface.

The MMS Relay/Server shall use the 3GPP MMS version number it supports in the MM4 abstract messages.

All unrecognized header fields and values received in an MM4 Request or MM4 Response shall be ignored by the MMS Relay/Server that receives the MM4 abstract message.

The MMS Relay/Server should be able to handle an MM4 Request or an MM4 Response with header fields and values of earlier 3GPP MMS versions if it is supporting a later 3GPP MMS version.

NOTE: When sending an MM4 Request message an originator MMS Relay/Server is not expected to know in advance the 3GPP MMS version of the recipient MMS Relay/Server.

8.5 Technical realisation of MMS on reference point MM5

This clause may be specified further in future releases.

8.6 Technical realisation of MMS on reference point MM6

This reference point is outside the scope of this release of the present document.

8.7 Technical realisation of MMS on reference point MM7

The MMSE may support Value Added Services in addition to the basic messaging services defined for MMS. These Value Added Services may be provided by the network operator of the MMSE or by third-party Value Added Service Providers (VASP). This clause defines the interworking between the MMS Relay/Server and the VASP.

The following figure illustrates an example data-flow of the message exchange involved in a VAS distribution of a MM as outlined by the abstract messages specified here:

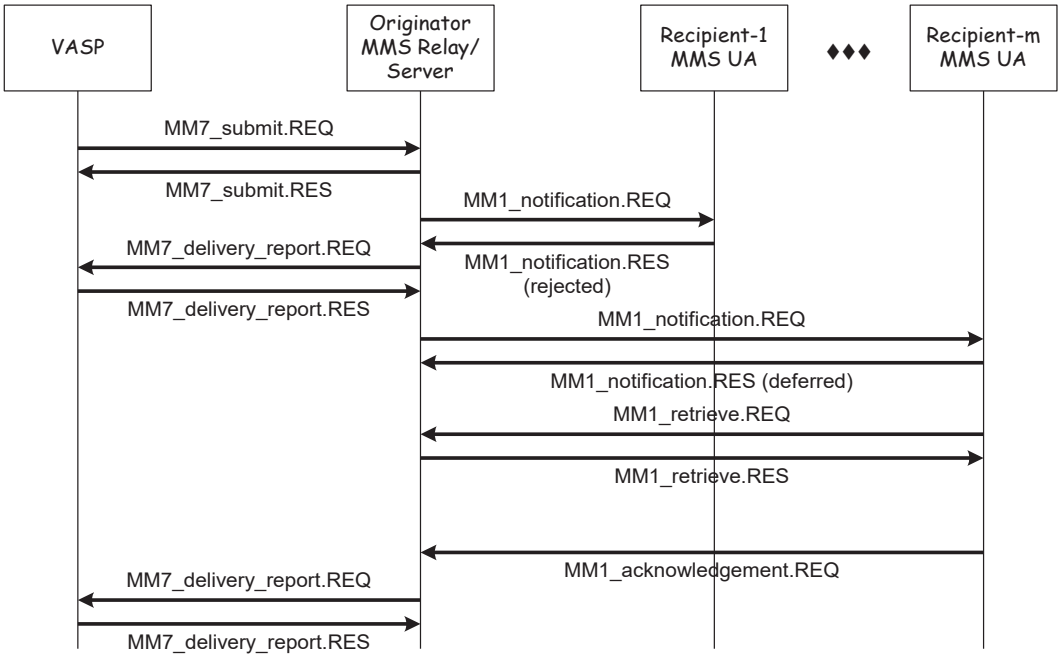

Figure 8. Sample data flow of MM7 message distribution

Subsequent sub-clauses will specify the abstract messages that will define the MM7 protocol.

Protocol version handling:

An entity (i.e., MMS Relay/Server or VASP) receiving an MM7 message formatted per a higher XML schema version than the one it supports, should handle the message according to its known functional level (e.g., it should ignore unknown XML tags and subsets of unknown schema structure).

An entity (i.e., MMS Relay/Server or VASP) receiving an MM7 message formatted per a lower XML schema version than it supports, should handle the message per its own schema version. The receiver may use default values for the data missing from the received lower version schema, if this data is relevant to the receiver.

The entity responding may either use its own XML schema version, or the sender's XML schema version.

8.7.1 Submitting a VAS MM

This section addresses the operations necessary for a VASP to provide the service by sending a multimedia message to one or more subscribers or to a distribution list. The involved abstract messages are outlined in the table below from type and direction points of view.

Table 58: Abstract messages for submitting VAS message

Abstract messages	Type	Direction
MM7_submit.REQ	Request	VASP -> MMS Relay/Server
MM7_submit.RES	Response	MMS Relay/Server -> VASP

8.7.1.1 Normal Operation

The VASP submits a message to the MMS Relay/Server by sending the MM7_submit.REQ supplying the multimedia message (MM) as the payload of the message. The message may be directed to one or more subscribers or to a distribution list. If the MMS Relay/Server accepts the submission, the MMS Relay/Server must send a MM7_submit.RES with a "success" status. This in no way indicates that the MM was actually delivered to the destinations but states that the request has been accepted.

Support for MM7_submit.REQ and MM7_submit.RES is mandatory for all MMS Relay/Servers that support MM7.

8.7.1.2 Abnormal Operation

The MMS Relay/Server should reject the MM7_submit.REQ if the VAS cannot be authorized or if the parameters of the request exceed the service level for the service being employed, or if the Relay/Server does not support third party charging. Similarly, if none of the destinations can be resolved then the response status should indicate an error. If one or several (but not all) addresses can be resolved, the MMS Relay/Server should deliver the message to those addresses and respond to the VAS using the MM7_submit.RES with a partial success to the VASP. Partial success does not indicate that the MM was actually delivered to the destinations but states that the request has been at least partially accepted.

8.7.1.3 Features

Authorisation: The VASP must supply its own identifier or the VAS identifier as part of the request.

Addressing: The VASP may direct the MM to a one or more subscribers or to a distribution list. In the addressing information, it may be indicated whether a recipient address is meant for informational purposes only or to be used for routing. In the addressing information, it may be indicated whether a recipient address has been encrypted or obfuscated. The originator of a submitted MM may be indicated in addressing-relevant information field(s) of the MM7_submit.REQ

Version: The MM7 protocol shall provide unique means to identify the version supported by both the MMS Relay/Server and VASP.

Message Type: The type of message used on reference point MM7 indicating MM7_submit.REQ and MM7_submit.RES as such.

Transaction Identification: The VASP shall provide an unambiguous transaction identification within an MM7_submit.REQ. The MM7_submit.RES shall unambiguously refer to the corresponding MM7_submit.REQ using the same transaction identification.

Linked message identification: The VASP will supply a message identifier when submitting a message, that defines a correspondence to a previous message that was delivered by the MMS Relay/Server to the VASP.

NOTE: Use case examples:

1) The Linked ID can be used by the Relay/Server to logically relate a VASP reply (MM7_Submit.REQ) to an original user's request (MM1_Submit.REQ, and MM7_Deliver.REQ), in which case the Linked ID corresponds to the Message ID returned in the original MM1_Submit.RES.

2) The LinkedID can as well be used by the VASP to keep track of a sequence of MM7_Submit.REQ (e.g. MMs to multiple users) triggered by a single MM7_Deliver.REQ (e.g. which was triggered by a user's MM1_submit.REQ).

Message class, priority, and subject: The VASP may qualify the MM further by adding a message class, a priority and/or subject to the MM7_submit.REQ.

Service code: The VASP may mark the content of the message with a service code that may be transferred by the MMS Relay/Server in the form of charging information for use by the billing system to properly bill the user for the service being supplied.

Time stamping: The VASP may time stamp the MM.

Time constraints: The VASP may request an earliest desired time of delivery of the MM. The VASP may request a time of expiry for the MM

Reply-Charging: The originator VASP may indicate that it wants to pay for a reply-MM and convey the reply-charging limitations (e.g. the latest time of submission and/or the maximum size of a reply-MM) in the MM7_submit.REQ.

Delivery reporting: The VASP may request a delivery report for the MM

Read reporting: The VASP may request a read-reply report when the user has viewed the MM.

Content adaptation restriction: The VASP may request that the content of the MM will not be subjected to content adaptation.

NOTE: From REL-6 onwards, in case of misalignment, DRM-protection rules shall prevail on the Content Adaptation Restriction feature.

Content Information: The VASP may provide information about the nature of the content in the message. The content information could be in terms of indications that:

- classifies content of the MM based on e.g. media types/formats, size, presentation formats [85]
- the MM contains DRM-protected content

In case of conflict with the adaptation restriction provided by the VASP, DRM-protection rules in content adaptation shall prevail over the adaptation restriction.

Content type: The MIME type of the multimedia content shall always be identified in the MM7_submit.REQ.

Content: The VASP may add content in the MM7_submit.REQ.

Message identification: The MMS Relay/Server shall always provide a message identification for an MM, which it has accepted for submission in the MM7_submit.RES.

Request status: The MMS Relay/Server shall indicate the status of the MM7_submit.REQ in the associated MM7_submit.RES. The reason code given in the status information element of the MM7_submit.RES may be supported with an explanatory text further qualifying the status.

Charged-Party: The VASP may indicate in the MM7_submit.REQ which party is expected to be charged for an MM submitted by the VASP, e.g. the sending, receiving, both parties or neither.

Charged party ID: The address of the third party which is expected to pay for the MM.

Message Distribution Indication: The VASP may indicate whether the content of the MM is intended for redistribution.

NOTE: From REL-6 onwards, in case of misalignment, DRM-protection rules shall prevail on the Message Distribution Indication feature.

Delivery Condition: The VASP may indicate a condition which needs to be met to allow delivery. If the condition is not met the MM shall be discarded by the MMS Relay/Server.

Applic-ID: The presence of this information element indicates that this abstract message shall be provided to an application residing on an MMS User Agent. It contains the identification of the destination application.

Reply-Applic-ID: If present, this information element indicates a “reply path”, i.e. the identifier of the application to which delivery reports, read-reply reports and reply-MMs are addressed if any.

Aux-Applic-Info: If present, this information element indicates additional application/implementation specific control information (cf. 7.1.18.1).

8.7.1.4 Information Elements

Table 59: Information elements in the MM7_submit.REQ .

Information element	Presence	Description
Transaction ID	Mandatory	The identification of the MM7_submit.REQ/ MM7_submit.RES pair.
Message type	Mandatory	Identifies this message as a MM7_submit request.
MM7 version	Mandatory	Identifies the version of the interface supported by the VASP
VASP ID	Optional	Identifier of the VASP for this MMS Relay/Server.
VAS ID	Optional	Identifier of the originating application.
Sender address	Optional	The address of the MM originator.
Recipient address	Mandatory	The address of the recipient MM. Multiple addresses are possible or the use of the alias that indicates the use of a distribution list. It is possible to mark an address to be used only for informational purposes. It is possible to mark that a recipient address is provided in encrypted or obfuscated format. E.g. the address was originally provided in encrypted or obfuscated form in an associated MM7_deliver.REQ.
Service code	Optional	Information supplied by the VASP which may be included in charging information. The syntax and semantics of the content of this information are out of the scope of this specification.
Linked ID	Optional	This identifies a correspondence to a previous valid message delivered to the VASP.
Message class	Optional	Class of the MM (e.g. advertisement, information service, accounting)
Date and time	Optional	The time and date of the submission of the MM (time stamp).
Time of Expiry	Optional	The desired time of expiry for the MM (time stamp).
Earliest delivery time	Optional	The earliest desired time of delivery of the MM to the recipient (time stamp).
Delivery report	Optional	A request for delivery report.
Read reply	Optional	A request for confirmation via a read report to be delivered as described in section 8.1
Reply-Charging	Optional	A request for reply-charging.
Reply-Deadline	Optional	In case of reply-charging the latest time of submission of replies granted to the recipient(s) (time stamp).
Reply-Charging-Size	Optional	In case of reply-charging the maximum size for reply-MM(s) granted to the recipient(s).
Priority	Optional	The priority (importance) of the message.
Subject	Optional	The title of the whole multimedia message.
Content Class	Optional	Classifies the content of the MM to the smallest content class to which the message belongs [85].
DRM Content	Optional	Indicates if the MM contains DRM-protected content
Adaptations	Optional	Indicates if VASP allows adaptation of the content (default True) (NOTE 1)
Charged Party	Optional	An indication which party is expected to be charged for an MM submitted by the VASP, e.g. the sending, receiving, both parties third party or neither.
Content type	Mandatory	The content type of the MM's content.
Content	Optional	The content of the multimedia message
Message Distribution Indicator	Optional	If set to "false" the VASP has indicated that content of the MM is not intended for redistribution. If set to "true" the VASP has indicated that content of the MM can be redistributed. (NOTE 2)
Charged Party ID	Optional	The address of the third party which is expected to pay for the MM
Delivery Condition	Optional	In the event of a single "Delivery Condition", then if the condition is met the MM shall be delivered to the recipient MMS User Agent, otherwise the MM shall be discarded. In the event of multiple "Delivery Condition", then if all conditions are met the MM shall be delivered to the recipient MMS User Agent, otherwise the MM shall be discarded. Upon receipt of an unknown Delivery Condition, the MMS Relay/Server ignores it and continues processing. See 8.7.8.4 for the definition of the Delivery Conditions.
Applic-ID	Optional	Identification of the destination application.

Reply-Applic-ID	Optional	Identification of an application to which reply-MMs, delivery reports and read-reply reports are addressed.
Aux-Applic-Info	Optional	Auxiliary application addressing information.
NOTE 1: From REL-6 onwards, in case of misalignment between the value assigned to Adaptations and DRM-protection rules, the latter shall prevail. NOTE 2: From REL-6 onwards, in case of misalignment between the value assigned to MDI and DRM-protection rules, the latter shall prevail.		

Table 60: Information elements in the MM7_submit.RES .

Information element	Presence	Description
Transaction ID	Mandatory	The identification of the MM7_submit.REQ/ MM7_submit.RES pair.
Message type	Mandatory	Identifies this message as a MM7_submit response.
MM7 version	Mandatory	Identifies the version of the interface supported by the MMS Relay/Server
Message ID	Conditional	If status indicates success then this contains the MMS Relay/Server generated identification of the submitted message. This ID may be used in subsequent requests and reports relating to this message.
Request Status	Mandatory	Status of the completion of the submission, no indication of delivery status is implied.
Request Status text	Optional	Text description of the status for display purposes, should qualify the Request Status.

8.7.2 Delivery Request

This section addresses cases where a message that is passed by the MMS Relay/Server to a VASP for processing. For example, this may include cases where the message originated from the MMS User-Agent.

The involved abstract messages are outlined in the table below from type and direction points of view.

Table 61: Abstract messages for demanding a service from a VASP

Abstract messages	Type	Direction
MM7_deliver.REQ	Request	MMS Relay/Server -> VASP
MM7_deliver.RES	Response	VASP -> MMS Relay/Server

8.7.2.1 Normal Operation

The MMS Relay/Server will deliver messages to the VASP by supplying the MM as the payload of the MM7_deliver.REQ. The message originates, for example, from a MMS User Agent, an external application, or from outside the MMSE. This delivery may include an identification of the request that may be used by the VASP to correlate a response to the message. The VASP should reply with a MM7_deliver.RES message indicating that the message has been successfully received and will be processed.

The following figure illustrates the data flow of a use case where a MMS User Agent requesting a service from a VAS that requires a response.

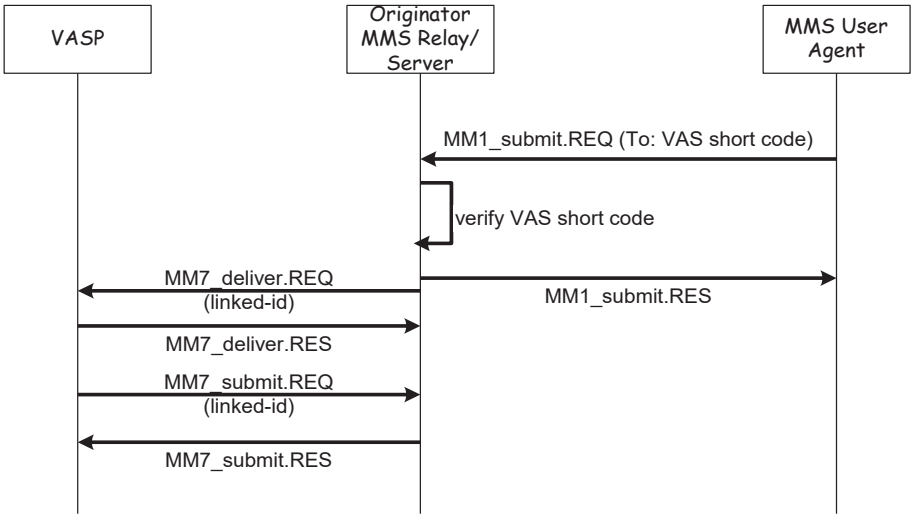

Figure 9: Use of MM7_deliver and subsequent response

Support for MM7_deliver.REQ and MM7_deliver.RES is mandatory for a MMS Relay/Server that supports MM7

8.7.2.2 Abnormal Operation

If the VASP cannot identify the requested content then it should indicate the failure in the MM7_deliver.RES status fields.

If the delivered content does not fulfil the conditions the VASP expected e.g. service not booked by the user, the VASP should indicate this failure in the MM7_deliver.RES status field.

8.7.2.3 Features

Authentication: The MMS Relay/Server may supply its own identifier as part of the request.

Addressing: All relevant address information for the delivery of the message to the VASP – including the addressing information from the original message and from the MMS Relay/Server should be included in the relevant information elements of MM7_deliver.REQ. In the addressing information, it may be indicated whether a certain recipient address is meant for informational purposes only or to be used for routing. In the addressing information, it may be indicated whether the sender address has been encrypted or obfuscated.

Previously-sent-by: The address(es) of the MMS User Agent(s) that submitted or forwarded the MM prior to the last forwarding MMS User Agent. In the multiple forwarding case the order of the provided addresses shall be indicated and the address of the originator MMS User Agent shall be marked, if present.

NOTE: The address of the last forwarding MMS User Agent is carried in other addressing elements.

Version: The MM7 protocol shall provide unique means to identify the version supported by both the MMS Relay/Server and VASP.

Message Type: The type of message used on reference point MM7 indicating MM7_deliver.REQ and MM7_deliver.RES as such.

Transaction Identification: The VASP shall provide an unambiguous transaction identification within a request. The response shall unambiguously refer to the corresponding request using the same transaction identification.

Message priority and subject: The MMS Relay/Server may qualify the MM further by adding a priority and/or subject to the MM7_deliver.REQ. This information will originate from the end-user's original request.

Linked message identification: The MMS Relay/Server will supply an identifier for the request that may be used by the VASP.

NOTE: Use case examples:

1) The Linked ID can be used by the Relay/Server to logically relate a VASP reply (MM7_Submit.REQ) to an original user's request (MM1_Submit.REQ, and MM7_Deliver.REQ), in which case the Linked ID corresponds to the Message ID returned in the original MM1_Submit.RES.

2) The LinkedID can as well be used by the VASP to keep track of a sequence of MM7_Submit.REQ (e.g. MMs to multiple users) triggered by a single MM7_Deliver.REQ (e.g. which was triggered by a user's MM1_submit.REQ).

Service code: The VASP may mark the response to the message with a service code that will be transferred to the charging information for use by the billing system to properly bill the user for the service being supplied.

Service Provider Identification: The MMS Relay/Server may provide the SPI (Service Provider Identification) for the sender. In case a message is delivered to a VASP based on the recipient address, the MMS Relay/Server may provide the SPI for the recipient. The SPI information can originate from e.g. a user profile or a MAP query.

Time stamping: The MM may include the date and time-of the most recent handling of the MM by an MMS User Agent (i.e. either submission or forwarding of the MM). In the case of forwarding the MM7_deliver.REQ may carry the date and time of the submission of the MM.

Reply-Charging: In case of reply-charging when the reply-MM is submitted within the MM7_deliver.REQ MMS Relay/Server should indicate that the message is free-of-charge reply.

Content type: The MIME type of the multimedia content shall always be identified in the MM7_deliver.REQ.

Content: The originator of the MM may supply content that is delivered to the VASP in the MM7_deliver.REQ.

Request status: The MMS Relay/Server shall indicate the status of the request in the associated response. The reason code given in the status information element of the response may be supported with an explanatory text further qualifying the status.

MMS User Agent capabilities: The MMS Relay/Server may supply information about the capabilities of the MMS User Agent that originated the MM. This information may be used by the VAS or VASP when creating subsequent MM7_submit.REQ messages to that particular recipient MMS User Agent. This information should be provided by the MMS Relay/Server either from information received from the MMS User Agent or other MMS Relay/Server-based proprietary means.

Applic-ID: This information element contains the identification of the destination application. Upon reception, the recipient MMS VAS Application shall provide this MM7_Deliver.REQ to the specified destination application.

Reply-Applic-ID: If present, this information element indicates a "reply path". It contains the application identifier which shall be used by the recipient MMS VAS Application when a reply-MM or a read-reply report is created.

Aux-Applic-Info: If present, this information element indicates additional application/implementation specific control information (cf. 7.1.18.1).

8.7.2.4 Information Elements

Table 62: Information elements in the MM7_deliver.REQ .

Information element	Presence	Description
Transaction ID	Mandatory	The identification of the MM7_deliver.REQ/ MM7_deliver.RES pair.
Message type	Mandatory	Identifies this message as a MM7_deliver request.
MM7 version	Mandatory	Identifies the version of the interface supported by the MMS Relay/Server
MMS Relay/Server ID	Optional	Identifier of the MMS Relay/Server
VASP ID	Optional	Identifier of the VASP for this MMS Relay/Server.
VAS ID	Optional	Identifier of the originating application.
Linked ID	Optional	Identifier that may be used by the VASP in a subsequent MM7_submit.REQ
Sender address	Mandatory	The address of the MM originator. It is possible to mark that the sender address has been encrypted or obfuscated by the MMS Relay/Server.
Recipient address	Optional	The address(es) of the intended recipients of the subsequent processing by the VASP or the original recipient address(es). It is possible to mark an address to be used only for informational purposes.
Previously-sent-by	Optional	In case of forwarding this information element contains one or more address(es) of MMS User Agent(s) that handled (i.e. forwarded or submitted) the MM prior to the MMS User Agent whose address is contained in the Sender address information element. The order of the addresses provided shall be marked. The address of the originator MMS User Agent shall be marked, if present.
Previously-sent-date-and-time	Optional	The date(s) and time(s) associated with submission and forwarding event(s) prior to the last handling of the MM by an MMS User Agent (time stamps).
Sender SPI	Optional	The SPI of the MM originator.
Recipient SPI	Optional	The SPI of the intended MM recipient, in case the MM was delivered to VASP based on the recipient address.
Date and time	Optional	The time and date of the submission of the MM (time stamp).
Reply-Charging-ID	Optional	In case of reply-charging when the reply-MM is submitted within the MM7_deliver.REQ this is the identification of the original MM that is replied to.
Priority	Optional	The priority (importance) of the message.
Subject	Optional	The title of the whole MM.
Content type	Mandatory	The content type of the MM's content.
MMS User Agent capabilities	Optional	Information about the capabilities of the MMS User Agent that originated the MM. In this context, the associated timestamp shall not be populated.
Applic-ID	Optional	Identification of the destination application.
Reply-Applic-ID	Optional	Identification of an application to which reply-MMs and read-reply reports are addressed.
Aux-Applic-Info	Optional	Auxiliary application addressing information.
Content	Optional	The content of the multimedia message

Table 63: Information elements in the MM7_deliver.RES .

Information element	Presence	Description
Transaction ID	Mandatory	The identification of the MM7_deliver.REQ/ MM7_deliver.RES pair.
Message type	Mandatory	Identifies this message as a MM7_deliver response.
MM7 version	Mandatory	Identifies the version of the interface supported by the VASP
Service code	Optional	Information supplied by the VASP which may be included in charging information. The syntax and semantics of the content of this information are out of the scope of this specification.
Request Status	Mandatory	Status of the completion of the request.
Request Status text	Optional	Text description of the status for display purposes, should qualify the Request Status

8.7.3 Cancel and replace of MM

This section details the requests that should be supported in MM7 to allow a VASP to control or change the distribution of a message. These operations will allow the VASP to cancel a submitted message prior to delivery or replace a submitted message with a new message.

The involved abstract messages are outlined in the table below from type and direction points of view.

Table 64: Abstract messages for controlling Distribution MM

Abstract messages	Type	Direction
MM7_cancel.REQ	Request	VASP -> MMS Relay/Server
MM7_cancel.RES	Response	MMS Relay/Server -> VASP
MM7_replace.REQ	Request	VASP -> MMS Relay/Server
MM7_replace.RES	Response	MMS Relay/Server -> VASP

The following figure illustrates the interaction between the different MMS entities in canceling a VASP message.

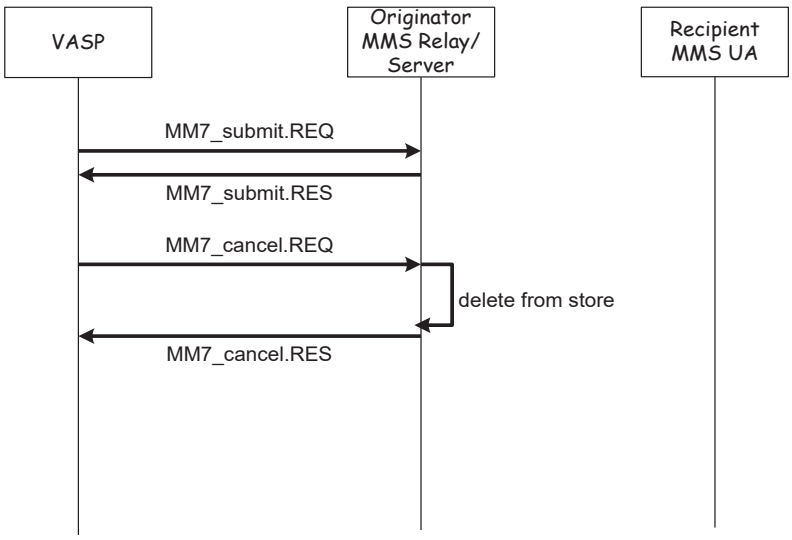

Figure 10: Data flow of VASP canceling a submitted message

8.7.3.1 Normal Operation

If the VASP has decided to cancel the delivery of a MM that it has already submitted, then the VASP should indicate this by sending the MM7_cancel.REQ message to the MMS Relay/Server. The MMS Relay/Server should check the status of the message indicated by the Message ID and cancel delivery to all destinations for which the MMS Relay/Server has not sent out a notification. The MMS Relay/Server should respond to the request with a MM7_cancel.RES indicating that the request was processed.

If the VASP has new content that it wishes to submit in place of the content that was originally submitted it should submit the new replacement content using the MM7_replace.REQ message. The MMS Relay/Server should check the status of the message indicated by the Message ID and replace the message content for all destinations that have not retrieved or forwarded the message as yet. The MMS Relay/Server should redistribute the new content to the destination list from the original MM7_submit.REQ. Optional information elements that appear in the MM7_replace.REQ message shall replace the corresponding information elements of the original submission (the VASP shall not replace information elements that were already provided in the previously sent notification),

information elements that do not appear in the MM7_replace.REQ message shall retain the original submission values. Replacement of messages that have been retrieved may be specified in future releases.

Support for MM7_cancel.REQ, MM7_cancel.RES, MM7_replace.REQ, and MM7_replace.RES is optional for all MMS Relay/Server that support MM7

8.7.3.2 Abnormal Operation

The MMS Relay/Server should reject a request to cancel or replace a message if it is unable to authorise the VAS to cancel or replace MMs, or find the Message ID indicated in the request, or cannot determine that the indicated message was originally submitted by the VASP.

8.7.3.3 Features

Authorisation: The VASP must supply its own identifier or the VAS identifier as part of the request. An application which resides on a MMS VAS application may supply its own identifiers as part of the request.

Addressing: When replacing a previously sent message the replacement shall be addressed to the same recipients as the original being replaced.

Version: The MM7 protocol shall provide unique means to identify the version supported by both the MMS Relay/Server and VASP.

Message type: The type of message used on reference point MM7 indicating MM7_cancel.REQ, MM7_cancel.RES, MM7_replace.REQ, and MM7_replace.RES as such.

Transaction identification: The VASP shall provide an unambiguous transaction identification within a request. The response shall unambiguously refer to the corresponding request using the same transaction identification.

Service code: The VASP may mark the content of the message with a service code that may be transferred by the MMS Relay/Server in the form of charging information for use by the billing system to properly bill the user for the service being supplied.

Time stamping: The VASP may time stamp the MM.

Time constraints: The VASP may also request the earliest desired time of delivery of the MM to be changed.

Read reporting: The VASP may request a read-reply report when the user has viewed the MM.

Content adaptation restriction: While replacing an MM, the VASP may request that the content of the MM will not be subjected to content adaptation.

NOTE: From REL-6 onwards, in case of misalignment, DRM-protection rules shall prevail on the Content Adaptation Restriction feature.

Content Information: While replacing an MM, the VASP may provide information about the nature of the content in the message. The content information could be in terms of indications that:

- classifies content of the MM based on e.g. media types/formats, size, presentation formats [85]
- the MM contains DRM-protected content

In case of conflict with the adaptation restriction provided by the VASP, DRM-protection rules in content adaptation shall prevail over the adaptation restriction.

Content type: The MIME type of the multimedia content shall always be identified in the MM7_replace.REQ if content is replaced.

Content: The content of the multimedia message if provided by the VASP may be conveyed in the MM7_replace.REQ.

Message identification: The MMS Relay/Server shall always provide a message identification for an MM, which it has accepted for submission in either the MM7_replace.REQ or in the MM7_cancel.REQ. The VASP shall supply this message identification when requesting to cancel or replace a previously submitted message. When replacing a MM the updated message retains the identification of the original (replaced) message.

Request status: The MMS Relay/Server shall indicate the status of the request in the associated response. The reason code given in the status information element of the response may be supported with an explanatory text further qualifying the status.

Applic-ID: The presence of this information element indicates that this abstract message shall be provided to an application residing on an MMS User Agent. It contains the identification of the destination application.

Reply-Applic-ID: If present, this information element indicates a "reply path", i.e. the identifier of the application to which delivery reports, read-reply reports and reply-MMs are addressed if any.

Aux-Applic-Info: If present, this information element indicates additional application/implementation specific control information (cf. 7.1.18.1).

8.7.3.4 Information Elements

Table 65: Information elements in the MM7_cancel.REQ .

Information element	Presence	Description
Transaction ID	Mandatory	The identification of the MM7_cancel.REQ/ MM7_cancel.RES pair.
Message type	Mandatory	Identifies this message as a MM7_cancel request.
MM7 version	Mandatory	Identifies the version of the interface supported by the VASP
VASP ID	Optional	Identifier of the VASP for this MMS Relay/Server.
VAS ID	Optional	Identifier of the originating application.
Sender address	Optional	The address of the MM originator.
Message ID	Mandatory	Identifier of the message to cancel.
Applic-ID	Optional	Identification of the destination application.
Reply-Applic-ID	Optional	Identification of an application to which reply-MMs, delivery reports and read-reply reports are addressed.
Aux-Applic-Info	Optional	Auxiliary application addressing information.

Table 66: Information elements in the MM7_cancel.RES .

Information element	Presence	Description
Transaction ID	Mandatory	The identification of the MM7_cancel.REQ/ MM7_cancel.RES pair.
Message type	Mandatory	Identifies this message as a MM7_cancel response.
MM7 version	Mandatory	Identifies the version of the interface supported by the MMS Relay/Server
Request Status	Mandatory	Status of the completion of the request.
Request Status text	Optional	Text description of the status for display purposes, should qualify the Request Status

Table 67: Information elements in the MM7_replace.REQ .

Information element	Presence	Description
Transaction ID	Mandatory	The identification of the MM7_replace.REQ/ MM7_replace.RES pair.
Message type	Mandatory	Identifies this message as a MM7_replace request.
MM7 version	Mandatory	Identifies the version of the interface supported by the VASP
VASP ID	Optional	Identifier of the VASP for this MMS Relay/Server.
VAS ID	Optional	Identifier of the originating application.
Message ID	Mandatory	Identifier of the message that current message replaces.
Service code	Optional	Information supplied by the VASP which may be included in charging information. The syntax and semantics of the content of this information are out of the scope of this specification.
Date and time	Optional	The time and date of the submission of the MM (time stamp).
Earliest delivery time	Optional	The earliest desired time of delivery of the MM to the recipient (time stamp).
Read reply	Optional	A request for confirmation via a read report to be delivered as described in section 8.1
Content Class	Optional	Classifies the content of the MM to the smallest content class to which the message belongs [85].
DRM Content	Optional	Indicates if the MM contains DRM-protected content
Adaptations	Optional	Indicates if VASP allows adaptation of the content (default True) (NOTE 1)
Content type	Conditional	The content type of the MM's content. If the Content IE appears, then the Content type IE must appear.
Applic-ID	Optional	Identification of the destination application.
Reply-Applic-ID	Optional	Identification of an application to which reply-MMs, delivery reports and read-reply reports are addressed.
Aux-Applic-Info	Optional	Auxiliary application addressing information.
Content	Optional	The content of the multimedia message
Message Distribution Indicator	Optional	If set to "false" the VASP has indicated that content of the MM is not intended for redistribution. If set to "true" the VASP has indicated that content of the MM can be redistributed. (NOTE 2)
NOTE 1: From REL-6 onwards, in case of misalignment between the value assigned to Adaptations and DRM-protection rules, the latter shall prevail. NOTE 2: From REL-6 onwards, in case of misalignment between the value assigned to MDI and DRM-protection rules, the latter shall prevail.		

Table 68: Information elements in the MM7_replace.RES.

Information element	Presence	Description
Transaction ID	Mandatory	The identification of the MM7_replace.REQ/ MM7_replace.RES pair.
Message type	Mandatory	Identifies this message as a MM7_replace response.
MM7 version	Mandatory	Identifies the version of the interface supported by the MMS Relay/Server
Request Status	Mandatory	Status of the completion of the request.
Request Status text	Optional	Text description of the status for display purposes, should qualify the Request Status

8.7.4 Delivery reporting to VASP

This part of MMS service covers the generation of a delivery report from the MMS Relay/Server to the VASP. The involved abstract messages are outlined in the table below from type and direction points of view.

Table 69: Abstract messages for delivery reports to VASP

Abstract Message	Type	Direction
MM7_delivery_report.REQ	Request	MMS Relay/Server -> VASP
MM7_delivery_report.RES	Response	VASP -> MMS Relay/Server

8.7.4.1 Normal Operation

The MMS Relay/Server shall create the MM7_delivery_report.REQ and send it to the VASP when the appropriate information is available.

Support for MM7_delivery_report.REQ and MM7_delivery_report.RES is mandatory for a MMS Relay/Server that supports MM7.

8.7.4.2 Abnormal Operation

In case the VASP cannot identify the MMS Relay/Server or the Message ID is not recognized, then the VASP shall respond with a MM7_delivery_report.RES including a status which indicates the reason the delivery report was not accepted.

8.7.4.3 Features

Addressing: Both the address of the VAS (which is the original MM originator) and the address of the recipient of the original MM shall be provided in the addressing-relevant information fields of MM7_delivery_report.REQ.

Version: The MM7 protocol shall provide unique means to identify the version supported by both the MMS Relay/Server and VASP.

Message Type: The type of message used on reference point MM7 indicating MM7_delivery_report.REQ and MM7_delivery_report.RES as such.

Transaction Identification: The VASP shall provide an unambiguous transaction identification within a request. The response shall unambiguously refer to the corresponding request using the same transaction identification.

Time stamping: The MM7_delivery_report.REQ shall carry the time and date of handling of the MM (e.g. retrieval, expiry, rejection)**.**

Message identification: In the MM7_delivery_report.REQ the MMS Relay/Server shall always provide the original message identification of the MM that the delivery report corresponds to as generated in response to the associated MM7_submit.REQ.

MM Status: The MM7_delivery_report.REQ shall carry the status of the MM delivery, e.g. retrieved, rejected, expired or indeterminate. The MM Status Extension may be used to provide more granularity. The status code may be supported with an explanatory text to further qualify the status of the MM delivery (e.g. recipient does not support MMS, recipient address unresolved, MM is too big, if/what content adaptation took place, address where the MM was forwarded). If there is no match between delivery condition and user status, delivery condition not met shall be returned.

Request Status: The VASP shall indicate the status of the MM7_delivery_report.REQ in the associated MM7_delivery_report.RES. The reason code given in the status information element of the response may be supported with an explanatory text further qualifying the status.

MMS User Agent Capabilities: The MMS Relay/Server may provide information about the MMS User Agent 's capabilities of the recipient of the original MM. This information should be provided by the MMS Relay/Server either from information received from the MMS User Agent or other MMS Relay/Server-based proprietary means.

NOTE: This information is time stamped. As time goes on, it may not accurately reflect the current MMS User Agent capabilities.

Applic-ID: This information element indicates the identification of the application that the delivery report is intended for. If a Reply-Applic-ID was indicated in the corresponding original MM, the recipient MMS Relay/Server shall set its value to that Reply-Applic-ID value. Otherwise, the recipient MMS Relay/Server shall set its value to the Applic-ID value that was indicated in the corresponding original MM.

Reply-Applic-ID: If present, this information element indicates a “reply path”, i.e. the identification of an application to which reply-MMs are addressed. The recipient MMS Relay/Server shall insert it into the MM7_delivery_report.REQ if the values of Applic-ID and Reply-Applic-ID in the corresponding original MM differ, in which case its value shall equal the Applic-ID value that was indicated in the corresponding original MM.

Aux-Applic-Info: If present, this information element indicates additional application/implementation specific control information (cf. 7.1.18.1). The recipient MMS Relay/Server shall insert it if Aux-Applic-Info was indicated in the corresponding original MM, in which case its value shall equal that Aux-Applic-Info value.

8.7.4.4 Information Elements

Table 70: Information elements in the MM7_delivery_report.REQ.

Information element	Presence	Description
Transaction ID	Mandatory	The identification of the MM7_delivery_report.REQ/ MM7_delivery_report.RES pair.
Message Type	Mandatory	The type of message used on reference point MM7 " MM7_delivery_report.REQ".
MM7 Version	Mandatory	The version of MM7 supported by the MMS Relay/Server
MMS Relay/Server ID	Optional	Identifier of the MMS Relay/Server
Message ID	Mandatory	The identification of the original MM.
VASP ID	Optional	Identifier of the VASP for this MMS Relay/Server.
VAS ID	Optional	Identifier of the originating application.
Recipient address	Mandatory	The address of the recipient of the original MM.
Sender address	Mandatory	The address of the VAS that submitted the original MM.
Date and time	Mandatory	Date and time the MM was handled (retrieved, expired, rejected, etc.) (time stamp)
MM Status	Mandatory	Status of the MM, e.g. retrieved, expired, rejected
MM Status Extension	Optional	Extension of the MM Status, to provide more granularity.
MM Status text	Optional	Text description of the status for display purposes, should qualify the MM Status
MMS User Agent Capabilities	Optional	Information about the MMS User Agent's capabilities of the recipient of the original MM. As part of this information, a timestamp should be conveyed indicating the time when the recipient MMS User Agent provided its capabilities.
Applic-ID	Optional	The identification of the originating application of the original MM.
Reply-Applic-ID	Optional	Identification of an application to which the originating application of the original MM shall address reply-MMs if any.
Aux-Applic-Info	Optional	Auxiliary application addressing information.

Table 71: Information elements in the MM7_delivery_report.RES.

Information element	Presence	Description
Transaction ID	Mandatory	The identification of the MM7_delivery_report.REQ/ MM7_delivery_report.RES pair.
Message Type	Mandatory	The type of message used on reference point MM7: "MM7_delivery_report.RES".
MM7 Version	Mandatory	The version of MM7 supported by the VASP
Request Status	Mandatory	The status of the associated MM7_delivery_report.REQ.
Request Status text	Optional	Text description of the status for display purposes, should qualify the Request Status

8.7.5 Read-Reply Report for VASP

This part of MMS service covers the delivery of a read-reply report from the MMS Relay/Server to the VASP. The involved abstract messages are outlined in the table below from type and direction points of view.

Table 72: Abstract messages for sending and receiving read-reply reports in MM7

Abstract messages	Type	Direction
MM7_read_reply.REQ	Request	MMS Relay/Server -> VASP
MM7_read_reply.RES	Response	VASP -> MMS Relay/Server

8.7.5.1 Normal Operation

If the VASP requested a read-reply report then the recipient MMS User Agent may create and send a read-reply to the MMS Relay/Server. The MMS Relay/Server must identify that this read-reply report is associated with a MM originating from the MM7 reference point and must create the MM7_read_reply.REQ and send it to the VASP. The VASP shall return a MM7_read_reply.RES that reflects the successful reception of the read-reply report.

Support for MM7_read_reply_report.REQ and MM7_read_reply_report.RES is optional for a MMS Relay/Server that supports MM7.

8.7.5.2 Abnormal Operation

In case the VASP cannot identify the MMS Relay/Server or the Message ID is not recognized, then the VASP shall respond with a MM7_read_reply.RES including a status which indicates the reason the read reply report was not accepted.

8.7.5.3 Features

Addressing: Both, the address of the VASP (which is the MM originator), and the address of the originator (which is the MM recipient) of a read-reply report shall be provided in the addressing-relevant information fields of MM7_read_reply_report.REQ.

Version: The MM7 protocol shall provide unique means to identify the version supported by both the MMS Relay/Server and VASP.

Message Type: The type of message used on reference point MM7 indicating MM7_read_reply.REQ and MM7_read_reply.RES as such.

Transaction Identification: The VASP shall provide an unambiguous transaction identification within a request. The response shall unambiguously refer to the corresponding request using the same transaction identification.

Message identification: In the MM7_read_reply_report.REQ the MMS Relay/Server shall always provide the original message identification of the MM that the read-reply report corresponds to as generated for the MM7_submit.RES.

Time Stamping: The MM7_read_reply_report.REQ shall carry the time-stamp associated with the read-reply report**.**

Read Status: The MM7_read_reply_report.REQ shall carry the status of the MM retrieval, e.g. read or deleted without being read.

Request Status: The VASP shall indicate the status of the MM7_read_reply.REQ in the associated MM7_read_reply.RES. The reason code given in the status information element of the response may be supported with an explanatory text further qualifying the status.

Applic-ID: In case of application addressing, this information element indicates the identification of the application that the read-reply report is intended for. The recipient MMS Relay/Server shall set its value to the Applic-ID value indicated in the corresponding MM1_read_reply.REQ or MM4_read_reply_recipient.REQ.

Reply-Applic-ID: If present, this information element indicates a “reply path”, i.e. the identifier of the application to which reply-MMs to this read-reply report are addressed if any. The recipient MMS Relay/Server shall set its value to the Reply-Applic-ID value indicated in the corresponding MM1_read_reply.REQ or MM4_read_reply_recipient.REQ.

Aux-Applic-Info: If present, this information element indicates additional application/implementation specific control information (cf. 7.1.18.1). The recipient MMS Relay/Server shall set its value to the Aux-Applic-Info value indicated in the corresponding MM1_read_reply.REQ or MM4_read_reply_recipient.REQ.

8.7.5.4 Information Elements

Table 73: Information elements in the MM7_read_reply_report.REQ.

Information element	Presence	Description
Transaction ID	Mandatory	The identification of the MM7_read_reply_report.REQ/ MM7_read_reply_report.RES pair.
Message Type	Mandatory	Identifies this message as a MM7_read_reply_report request.
MM7 Version	Mandatory	The version of MM7 supported by the MMS Relay/Server.
MMS Relay/Server ID	Optional	Identifier of the MMS Relay/Server
Recipient address	Mandatory	The address of the MM recipient of the original MM, i.e. the originator of the read-reply report.
VASP ID	Optional	Identifier of the VASP for this MMS Relay/Server.
VAS ID	Optional	Identifier of the originating application.
Sender address	Mandatory	The address of the VASP (originator of the original MM) i.e. the recipient of the read-reply report.
Message ID	Mandatory	The message ID of the original MM.
Date and time	Mandatory	Date and time the MM was handled (read, deleted without being read, etc.) (time stamp)
Read Status	Mandatory	Status of the MM, e.g. Read, Deleted without being read
Read Status text	Optional	Text description of the status for display purposes, should qualify the Read Status
Applic-ID	Optional	The identification of the originating application of the original MM.
Reply-Applic-ID	Optional	Identification of an application to which the originating application of the original MM shall address reply-MMs if any.
Aux-Applic-Info	Optional	Auxiliary application addressing information.

Table 74: Information elements in the MM7_read_reply_report.RES.

Information element	Presence	Description
Transaction ID	Mandatory	The identification of the MM7_read_reply_report.REQ/ MM7_read_reply_report.RES pair.
Message Type	Mandatory	Identifies this message as a MM7_read_reply_report response.
MM7 Version	Mandatory	The version of MM7 supported by the VASP.
Request Status	Mandatory	The status of the associated MM7_read_reply_report.REQ.
Request Status text	Optional	Text description of the status for display purposes, should qualify the Request Status.

8.7.5A Extended Cancel and Extended Replace of MM

This section details the requests that should be supported in MM7 to allow a VASP to control or change the distribution of a MM, down to the MMS User Agent. These operations will allow the VASP to cancel a submitted MM or replace a submitted MM with a new MM.

The involved abstract messages are outlined in Table 75 from type and direction points of view.

Table 75: Abstract messages for controlling Distribution MM

Abstract messages	Type	Direction
MM7_extended_cancel.REQ	Request	VASP -> MMS Relay/Server
MM7_extended_cancel.RES	Response	MMS Relay/Server -> VASP
MM7_extended_replace.REQ	Request	VASP -> MMS Relay/Server
MM7_extended_replace.RES	Response	MMS Relay/Server -> VASP

The following figure illustrates the interaction between the different MMS entities in cancelling a VASP message.

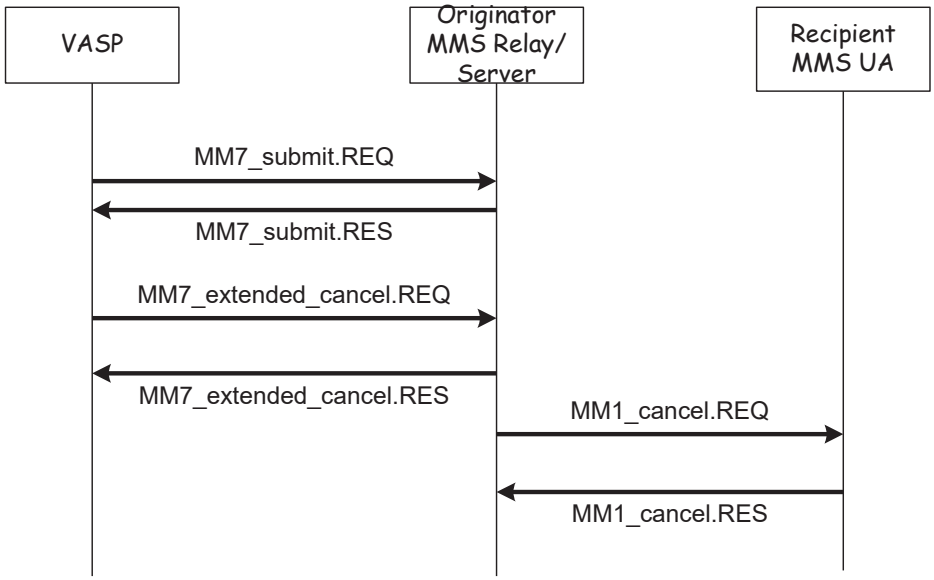

Figure 11: Data flow of VASP cancelling a submitted message down to the MMS User Agent

8.7.5A.1 Normal Operation

If the VASP has decided to cancel the delivery of a MM that it has already submitted, and wants to extend the cancellation to be effective also on an MM already downloaded by the terminal, then the VASP should indicate this by sending the MM7_extended_cancel.REQ message to the MMS Relay/Server. The MMS Relay/Server should check the status of the message indicated by the Cancel ID and:

1) locally cancel delivery, at the MMS Relay/Server level, to all destinations for which the MMS Relay/Server has not sent out a notification;

2) locally cancel the MM at the MMS Relay/Server level and indicate appropriate error code in MM1_retrieve.RES as "Request Status" and "Request Status", to all destinations for which the MMS Relay/Server has sent out a notification but the MM has not yet been retrieved, and

3) extend that cancellation down to the MMS User Agent using MM1_cancel.REQ, to all destinations for which the MM has already been retrieved. The MMS Relay/Server should use the destination list from the original MM7_submit.REQ in MM1_cancel.REQ.

The MMS Relay/Server should respond to the request with a MM7_extended_cancel.RES indicating that the request was processed.

If the VASP has new content that it wishes to submit in place of the content that was originally submitted, and wants to extend the replacement to be effective also on an MM already downloaded by the MMS User Agent, it should submit the new replacement content using the MM7_extended_replace.REQ message. The MMS Relay/Server should:

1) check the status of the message indicated by the Replace ID and replace the message content for all destinations that have not retrieved or forwarded the message as yet; and

2) extend that replacement down to the MMS User Agent, to all destinations that have retrieved but not forwarded the message; via sending an additional notification to the MMS User Agent. The MMS Relay/Server should redistribute the new content to the destination list from the original MM7_submit.REQ. Optional information elements that appear in the MM7_extended_replace.REQ message shall replace the corresponding information elements of the original submission (the VASP should not replace any information elements that were already provided in the previously sent notification), information elements that do not appear in the MM7_extended_replace.REQ message shall retain the original submission values.

The MMS Relay/Server should respond to the request with a MM7_extended_replace.RES indicating if the request was processed.

Support for MM7_extended_cancel.REQ, MM7_extended_cancel.RES, MM7_extended_replace.REQ, and MM7_extended_replace.RES is optional for all MMS Relay/Server that support MM7.

8.7.5A.2 Abnormal Operation

The MMS Relay/Server should reject a request to cancel or replace a message if it is unable to authorise the VAS to cancel or replace MMs, or find the ID of the previous message (i.e. Cancel ID and Replace ID respectively) indicated in the request.

8.7.5A.3 Features

Authorisation: The VASP must supply its own identifier or the VAS identifier as part of the request.

Addressing: The replacement and cancellation shall be addressed to the same recipients as the original MM being replaced and cancelled respectively.

Version: The MM7 protocol shall provide unique means to identify the version supported by both the MMS Relay/Server and VASP.

Message type: The type of message used on reference point MM7 indicating MM7_extended_cancel.REQ, MM7_extended_cancel.RES, MM7_extended_replace.REQ, and MM7_extended_replace.RES as such.

Transaction identification: The VASP shall provide an unambiguous transaction identification within a request. The response shall unambiguously refer to the corresponding request using the same transaction identification.

Service code: When replacing a previously sent MM, the VASP may mark the content of the message with a service code that may be transferred by the MMS Relay/Server in the form of charging information for use by the billing system to properly bill the user for the service being supplied.

Time stamping: When replacing a previously sent MM, the VASP may time stamp the MM.

Time constraints: When replacing a previously sent MM, the VASP may also request the earliest desired time of delivery and time of expiry of the MM to be changed.

Delivery reporting: When replacing a previously sent MM, the VASP may request a delivery report for the updated (replacing) MM.

Read reporting: When replacing a previously sent message, the VASP may request a read-reply report when the user has viewed the updated (replacing) MM.

Content adaptation restriction: The VASP may request that the content of the MM will not be subjected to content adaptation.

NOTE: In case of misalignment, DRM-protection rules shall prevail on the Content Adaptation Restriction feature.

Content type: The MIME type of the multimedia content shall always be identified in the MM7_extended_replace.REQ if content is replaced.

Content: The content of the multimedia message if provided by the VASP may be conveyed in the MM7_extended_replace.REQ.

Replace ID: When replacing a previously sent MM, the VASP shall supply the identifier of the previous MM to be replaced.

Cancel ID: When cancelling a previously sent MM, the VASP shall supply the identifier of the previous MM to be cancelled.

Message identification: When replacing an MM that was retrieved or forwarded, the updated (replacing) MM has a different identification from the original (replaced) message. In this case, the MMS Relay/Server shall provide the new identification for the updated (replacing) MM in the MM7_extended_replace.RES. When replacing a MM that was neither retrieved nor forwarded, the updated MM retains the identification of the original (replaced) MM.

Request status: The MMS Relay/Server shall indicate the status of the request in the associated response.

8.7.5A.4 Information Elements

Table 76: Information elements in the MM7_extended_cancel.REQ .

Information element	Presence	Description
Transaction ID	Mandatory	The identification of the MM7_extended_cancel.REQ/ MM7_extended_cancel.RES pair.
Message type	Mandatory	Identifies this message as a MM7 extended cancel request.
MM7 version	Mandatory	Identifies the version of the interface supported by the VASP
VASP ID	Optional	Identifier of the VASP for this MMS Relay/Server.
VAS ID	Optional	Identifier of the originating application.
Sender address	Optional	The address of the MM originator.
Cancel ID	Mandatory	Identifier of the message to cancel.

Table 77: Information elements in the MM7_extended_cancel.RES .

Information element	Presence	Description
Transaction ID	Mandatory	The identification of the MM7_extended_cancel.REQ/ MM7_extended_cancel.RES pair.
Message type	Mandatory	Identifies this message as a MM7 extended_cancel response.
MM7 version	Mandatory	Identifies the version of the interface supported by the MMS Relay/Server
Request Status	Mandatory	Status of the completion of the request.

Table 78: Information elements in the MM7_extended_replace.REQ .

Information element	Presence	Description
Transaction ID	Mandatory	The identification of the MM7_extended_replace .REQ/ MM7_extended_replace.RES pair.
Message type	Mandatory	Identifies this message as a MM7_extended replace request.
MM7 version	Mandatory	Identifies the version of the interface supported by the VASP
VASP ID	Optional	Identifier of the VASP for this MMS Relay/Server.
VAS ID	Optional	Identifier of the originating application.
Service code	Optional	Information supplied by the VASP which may be included in charging information. The syntax and semantics of the content of this information are out of the scope of this specification.
Replace_ID	Mandatory	This identifies the previously sent VAS/VASP MM that need to be replaced by this MM.
Date and time	Optional	The time and date of the submission of the MM (time stamp).
Earliest delivery time	Optional	The earliest desired time of delivery of the MM to the recipient (time stamp).
Time of Expiry	Optional	The desired time of expiry for the MM (time stamp).
Delivery report	Optional	A request for delivery report.
Read reply	Optional	A request for confirmation via a read report to be delivered as described in section 8.1
Adaptations	Optional	Indicates if VASP allows adaptation of the content (default True) (NOTE 1)
Content type	Conditional	The content type of the MM's content. If the Content IE appears, then the Content type IE must appear.
Content	Optional	The content of the multimedia message
NOTE 1: In case of misalignment between the value assigned to Adaptations and DRM-protection rules, the latter shall prevail.		

Table 79: Information elements in the MM7_extended_replace.RES.

Information element	Presence	Description
Transaction ID	Mandatory	The identification of the MM7_extended_replace.REQ/ MM7_ extended_replace.RES pair.
Message type	Mandatory	Identifies this message as a MM7_extended_replace.RES.
MM7 version	Mandatory	Identifies the version of the interface supported by the MMS Relay/Server
Message ID	Conditional	The MMS Relay/Server generated identification of the updated (replacing) MM (applicable only if the replaced Mm is retrieved or forwarded).
Request Status	Mandatory	Status of the completion of the request.

8.7.6 Generic Error Handling

When the MMS Relay/Server or VASP receives a MM7 abstract message that cannot be replied to with the specific response it shall reply using a generic error message as described here. To get a correlation between the original send REQ and the error response, every abstract message on the MM7 reference point shall include a Transaction ID.

The involved abstract messages are outlined in the table below from type and direction points of view.

Table 80: Abstract message for generic error notification

Abstract message	Type	Direction
MM7_RS_error.RES	Response	MMS Relay/Server -> VASP
MM7_VASP_error.RES	Response	VASP->MMS Relay/Server

8.7.6.1 Normal Operation

If the MMS Relay/Server has received a message over the MM7 interface and does not recognize the Message Type, or the requested feature is not supported and the normal response message is not supported, then the MMS Relay/Server must generate a MM7_RS_error.RES message to reply to the VASP.

If the VASP has received a message over the MM7 interface and does not recognize the Message Type, or the requested feature is not supported and the normal response message is not supported, then the VASP must generate a MM7_VASP_error.RES message to reply to the MMS Relay/Server.

Support for the MM7_RS_error.RES and MM7_VASP_error.RES is Mandatory for a MMS Relay/Server that supports MM7

8.7.6.2 Features

Version: The MM7 protocol shall provide unique means to identify the version supported by both the MMS Relay/Server and VASP.

Message Type: The type of message used on reference point MM7 indicating MM7_RS_error.RES or MM7_VASP_error.RES as such.

Transaction Identification: The response shall unambiguously refer to the corresponding request using the same transaction identification.

Error Status: The MMS Relay/Server or VASP shall indicate the error condition that caused the generation of the error response. The reason code given in the status information element of the response may be supported with an explanatory text further qualifying the status.

8.7.6.3 Information Elements

Table 81: Information elements in the MM7_RS_error.RES .

Information element	Presence	Description
Transaction ID	Mandatory	Identifier that corresponds to the Transaction ID of the incoming message.
Message type	Mandatory	Identifies this message as a MM7_RS_error response.
MM7 version	Mandatory	Identifies the version of the interface supported by the MMS Relay/Server
Error Status	Mandatory	Error code (e.g. Message type not-supported, MM7 version not supported).
Error Status text	Optional	Text description of the status for display purposes, should qualify the Error Status.

Table 82: Information elements in the MM7_VASP_error.RES .

Information element	Presence	Description
Transaction ID	Mandatory	Identifier that corresponds to the Transaction ID of the incoming message.
Message type	Mandatory	Identifies this message as a MM7_VASP_error response.
MM7 version	Mandatory	Identifies the version of the interface supported by the VASP
Error Status	Mandatory	Error code (e.g. Message type not-supported, MM7 version not supported).
Error Status text	Optional	Text description of the status for display purposes, should qualify the Error Status.

8.7.7 Administrating the Distribution List

After a Value Added Service becomes available users may subscribe to the service using direct contact to the VASP (e.g. by sending a MM via MM1_submit.REQ to the service provider including registration information). The distribution list may be maintained by the MMS Relay/Server. The full definition of the administration of the distribution list may be specified in future releases of this specification.

8.7.8 Implementation of the MM7 Abstract Messages

The interface between a VASP and the MMS Relay/Server, over the MM7 reference point, shall be realised using SOAP 1.1 [68] as the formatting language. The VASP and the MMS Relay/Server shall be able to play dual roles of sender and receiver of SOAP messages. HTTP [48] shall be used as the transport protocol of the SOAP messages. The SOAP message shall bind to the HTTP request/response model by providing SOAP request parameters in the body of the HTTP POST request and the SOAP response in the body of the corresponding HTTP response.

8.7.8.1 SOAP Message Format and Encoding Principles

The following principles shall be used in the design of the SOAP implementation of the MM7 interface:

- The schema shall be based on the W3C SOAP 1.1 schema . The schema shall include an indication of the version of the MM7 specification that is supported.

  NOTE: The W3C SOAP 1.1 schema will be published by the 3GPP. The URI shall be http://www.3gpp.org/ftp/Specs/archive/23_series/23.140/schema/REL-5-MM7-1-1.

- The MM7 SOAP messages shall consist of a SOAP envelope, SOAP Header element and SOAP Body element, as described in [68].

- The SOAP EncodingStyle [68] should not be used.

- Transaction management shall be handled in the SOAP Header element. The TransactionID shall be included as a SOAP Header entry. The SOAP *actor* [68] attribute should not be specified in the SOAP Header entry. The SOAP *mustUnderstand* [68] attribute should be specified with value “1”.

- All MM7 information elements, except for the TransactionID, shall be included in the SOAP Body element.
- XML element names shall use Upper Camel Case convention, where words are concatenated to form an element name with the first letter of each word in upper case (e.g. EarliestDeliveryTime). The only exception to this rule is where an acronym (e.g. VASP) is used - in such cases all of the letters of the acronym shall be in upper case (e.g. VASPHeader).

8.7.8.1.1 Binding to HTTP

MM7 request messages shall be transferred in an HTTP POST request. MM7 responses shall be transferred in an HTTP Response message. The media type "text/xml" [70] shall be used for messages containing only the SOAP envelope.

MM7 requests that carry a SOAP attachment shall have a "multipart/related" [71] Content-Type. The SOAP envelope shall be the first part of the MIME message and shall be indicated by the Start parameter of the multipart/related Content-Type. If a SOAP attachment is included it shall be encoded as a MIME part and shall be the second part of the HTTP Post message. The MIME part should have the appropriate content type(s) to identify the payload. Figures 12 and 13 provide few examples of the message structure.This MIME part shall have two MIME headers - Content-Type and Content-ID [72] fields. The Content-ID shall be referenced by the MM7 request <Content> element using the format specified in [69].

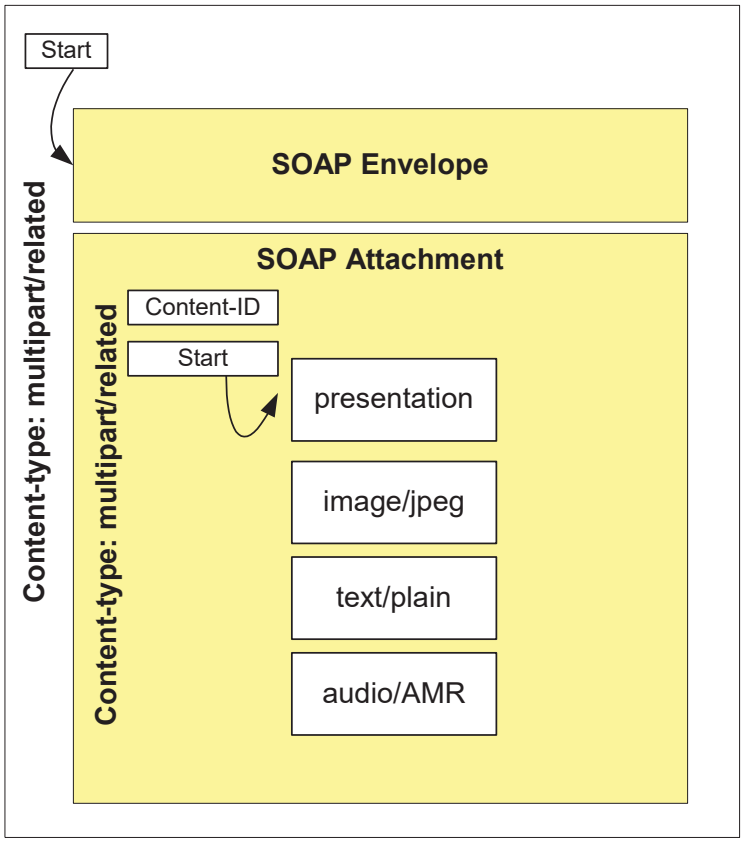

Figure 12: Message structure for a message with a SOAP Attachment (multipart/related payload)

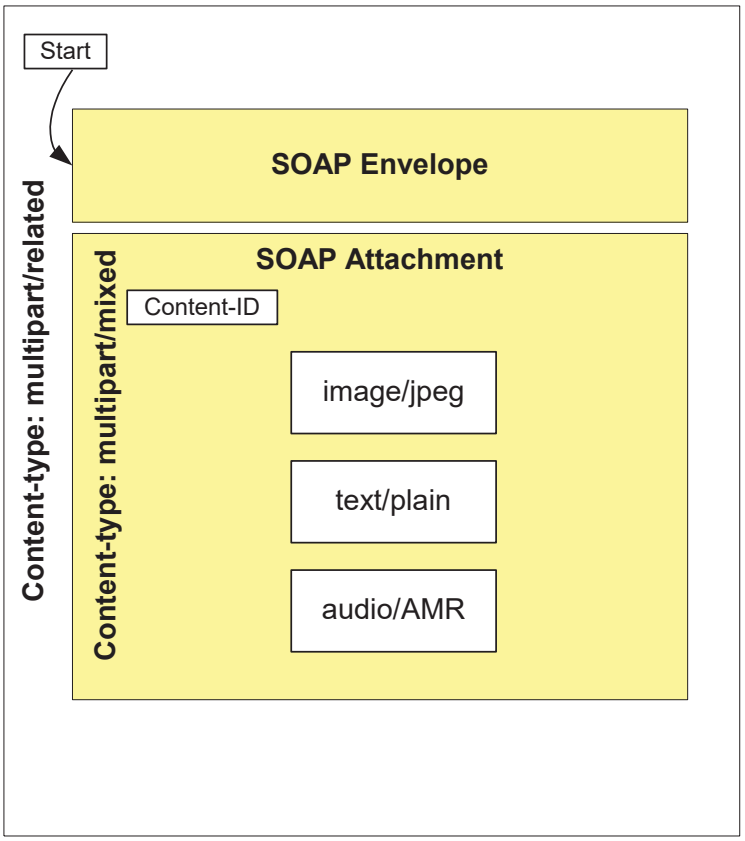

Figure 13: Message structure for a message with a SOAP Attachment (multipart/mixed payload)

For specific examples see the section describing SOAP HTTP examples.

8.7.8.1.2 SOAPAction Header Field

The SOAPAction HTTP request header field [68] should be set to the NULL string (i.e. “”).

8.7.8.1.3 DRM-related media types in SOAP messages

In case MM elements are DRM-protected these MM elements shall be of media types as defined in [76] and [78].

8.7.8.2 MM7 Addressing Considerations

In order to bind properly to HTTP, the MMS Relay/Server and the VASP shall be addressable by a unique URI type address [48]. This address shall be placed in the host header field in the HTTP POST method.

In the SOAP body, when the recipient MMS User Agent is addressed, the address-encoding scheme for MM1 shall be used. For these purposes the VASP shall be identified by a MM1 addressable address.

8.7.8.3 Status Reporting

The MM7 response messages shall be carried within a HTTP Response. The response may carry status at three levels:

– network errors shall be indicated by the HTTP level, e.g. as an HTTP 403 “Server not found” and shall be carried in the HTTP response back to the originating application.

– request processing errors (status codes in the range 2xxx-9xxx) shall be reported as a SOAP Fault as defined in [68]. The SOAP fault shall include the *faultcode* [68], *faultstring*[68], and *detail*[68] elements. The *detail* element shall include the status elements described below and in Table 70. The SOAP detail element shall include VASPErrorRsp or RSErrorRsp element as direct child elements. VASPErrorRsp element shall be included if the SOAP Fault is generated by the VASP and RSErrorRsp element shall be sent if the SOAP Fault is generated by the MMS Relay/Server. Errors relating to the TransactionID shall be reported as a SOAP Fault. The *faultcode* shall be "Client.TransactionID" and the *faultstring* shall be used to indicate the human-readable description of the error. No *detail* element shall appear.

– success or partial success (status codes from the Success class, i.e. with format 1xxx) shall be reported in a MM7 response message that will include the following status elements, contained in the Status element of the response messages.

All status responses shall be reported with three XML elements in the response, i.e. the details of the SOAP Fault and the status of the MM7 response message –

- StatusCode shall indicate a numerical code that identifies different classes of error or successful completion of the operation. The StatusCode is a four-digit number of which the two high-order digits are defined in section 8.7.8.3.1, the two low-order digits are implementation specific.

- StatusText shall contain a predefined human readable description of the numerical code that indicates the general type of the error.

- Details, optionally, gives particular details of the error or partial success, e.g. indicates the address that cannot be resolved or message-id that is not recognized. The format of the details element is implementation specific.

8.7.8.3.1 Request and Error Status Codes

The StatusText element (for application-level situations) shall be used to carry a human readable explanation of the error or success situation, e.g. partial success. In Table 70 below the status text should be used by the VASP or MMS Relay/Server when indicating status information to the originator. In addition to this there will be status codes consisting of a four digit numeric value. The first digit of the status code indicates the class of the code. There are 4 classes:

- 1xxx: Success in the operation,
- 2xxx: Client errors,
- 3xxx: Server errors,
- 4xxx: Service errors.

Status codes are extensible. The VASP and the MMS Relay/Server must understand the class of a status code. Unrecognised codes shall be treated as the x000 code for that class. Codes outside the 4 defined class ranges shall be treated as 3000. For implementation specific codes, the numbers in the range x500-x999 shall be used.

The following Table 67 shows the StatusCodes and StatusTexts that are currently defined.

Table 83: StatusCode and StatusText

StatusCode	StatusText	Meaning
1000	Success	This code indicates that the request was executed completely
1100	Partial success	This code indicates that the request was executed partially but some parts of the request could not be completed. Lower order digits and the optional Details element may indicate what parts of the request were not completed.
2000	Client error	Client made an invalid request
2001	Operation restricted	The request was refused due to lack of permission to execute the command.
2002	Address Error	The address supplied in the request was not in a recognized format or the MMS Relay/Server ascertained that the address was not valid for the network because it was determined not to be serviced by this MMS Relay/Server. When used in response-result, and multiple recipients were specified in the corresponding push submission, this status code indicates that at least one address is incorrect.
2003	Address Not Found	The address supplied in the request could not be located by the MMS Relay/Server. This code is returned when an operation is requested on a previously submitted message and the MMS Relay/Server cannot find the message for the address specified.
2004	Multimedia content refused	The server could not parse the MIME content that was attached to the SOAP message and indicated by the Content element or the content size or media type was unacceptable.
2005	Message ID Not found	This code is returned when an operation is requested on a previously submitted message and the MMS Relay/Server cannot find the message for the message ID specified or when the VASP receives a report concerning a previously submitted message and the message ID is not recognized.
2006	LinkedID not found	This code is returned when a LinkedID was supplied and the MMS Relay/Server could not find the related message.
2007	Message format corrupt	An element value format is inappropriate or incorrect.
2008	Application ID not found	This code is returned when an operation is requested on a previously submitted message and the MMS Relay/Server cannot find the destination application for the application ID specified or when the VASP receives a report concerning a previously submitted message and the application ID is not recognized.
2009	Reply Application ID not found	This code is returned when a Reply Application ID was supplied and the MMS Relay/Server could not find the originating application.
3000	Server Error	The server failed to fulfill an apparently valid request.
3001	Not Possible	The request could not be carried out because it is not possible. This code is normally used as a result of a cancel or status query on a message that is no longer available for cancel or status query. The MMS Relay/Server has recognized the message in question, but it cannot fulfill the request because the message is already complete or status is no longer available.
3002	Message rejected	Server could not complete the service requested.
3003	Multiple addresses not supported	The MMS Relay/Server does not support this operation on multiple recipients. The operation MAY be resubmitted as multiple single recipient operations.

3004	Application Addressing not supported	Recipient MMS User Agent does not support the transport of application data.
4000	General service error	The requested service cannot be fulfilled.
4001	Improper identification	Identification header of the request does not uniquely identify the client (either the VASP or MMS Relay/Server).
4002	Unsupported version	The version indicated by the MM7 Version element is not supported.
4003	Unsupported operation	The server does not support the request indicated by the MessageType element in the header of the message.
4004	Validation error	The SOAP and XML structures could not be parsed, mandatory fields are missing, or the message-format is not compatible to the format specified. Details field may specify the parsing error that caused this status.
4005	Service error	The operation caused a server (either MMS Relay/Server or VASP) failure and should not be resent.
4006	Service unavailable	This indication may be sent by the server when service is temporarily unavailable, e.g. when server is busy
4007	Service denied	The client does not have permission or funds to perform the requested operation.
4008	Application denied	The application does not have permission or funds to perform the requested operation.

8.7.8.4 Delivery Conditions

The Delivery Condition element shall be used to carry the conditions that are carried by the VASP/VAS to the MMS Relay/Server.

Delivery Conditions are extensible. Unrecognised Delivery Condition and values reserved by this specification for future definitions shall be ignored. The numbers in the range 1000-1999 shall be used for bilateral agreements.

The table below shows the Delivery Conditions that are currently defined.

Table 84: Delivery Conditions

Delivery condition value	Delivery condition value	Comment
1	MMS capable only	VASP/VAS intend the MM to be sent to a recipient's terminal that has MMS capabilities.
2	HPLMN only	VASP/VAS intend the MM to be sent to a recipient's terminal that is within the PLMN (i.e., not roaming).
3 … 999	Reserved for future definition by this specification	Reserved for future definition by this specification. Ignore if received by an MMS Relay/Server that can't interpret the value.
1000 … 1999	Reserved for bilateral agreement usage.	Reserved for bilateral agreement usage and will not be used by this specification in the future. Ignore if received by an MMS Relay/Server that can't interpret the value.

8.7.9 Mapping of Information Elements to SOAP Elements

The following subsections detail the mapping of the information elements of the abstract messages to SOAP elements. The full XML Schema definition of the MM7 reference point appears in Annex L of this document. Specification of the format of SOAP element values appear in the schema.

8.7.9.1 MM7_submit.REQ mapping

Information Element	Location	ElementName	Comments
Transaction ID	SOAP Header	TransactionID	
Message-Type	SOAP Body	MessageType	Defined as Root element of SOAP Body
MM7 Version	SOAP Body	MM7Version	Value is the number of the specification in which the schema has changed most recently, e.g. 5.2.0
VASP ID	SOAP Body	VASPID	
VAS ID	SOAP Body	VASID	
Sender Address	SOAP Body	SenderAddress	
Recipient Address	SOAP Body	Recipients	Different address format will be specified as part of element value
Service code	SOAP Body	ServiceCode	Information supplied for billing purposes – exact format is implementation dependent
Linked ID	SOAP Body	LinkedID	Message-ID of linked message
Message class	SOAP Body	MessageClass	Enumeration – possible values: Informational, Advertisement, Auto
Date and time	SOAP Body	TimeStamp	
Time of Expiry	SOAP Body	ExpiryDate	
Earliest delivery time	SOAP Body	EarliestDeliveryTime	
Delivery report	SOAP Body	DeliveryReport	Boolean – true or false
Read reply	SOAP Body	ReadReply	Boolean – true or false
Reply-Charging	SOAP Body	ReplyCharging	No value – presence implies true!
Reply-Deadline	SOAP Body	replyDeadline	Attribute of *ReplyCharging* element Date format – absolute or relative
Reply-Charging-Size	SOAP Body	replyChargingSize	Attribute of *ReplyCharging* element
Priority	SOAP Body	Priority	Enumeration – possible values: High, Normal, Low
Subject	SOAP Body	Subject	
Content Class	SOAP Body	ContentClass	Enumeration – possible values: text, image-basic, image-rich, video-basic, video-rich, megapixel, content-basic, content-rich
DRM Content	SOAP Body	DRMContent	Boolean – true or false
Adaptations	SOAP Body	allowAdaptations	Attribute of *Content* element Boolean – true or false
Charged Party	SOAP Body	ChargedParty	Enumeration – possible values: Sender, Recipient, Both, Neither
Message Distribution Indicator	SOAP Body	DistributionIndicator	Boolean – true or false
Delivery Condition	SOAP Body	DeliveryCondition	Possible values include MMS capable only, HPLMN only
Applic-ID	SOAP Body	ApplicID	
Reply-Applic-ID	SOAP Body	ReplyApplicID	
Aux-Applic-Info	SOAP Body	AuxApplicInfo	
Content type	MIME header – Attachment	Content-Type	

Content	SOAP Body	Content	href:cid attribute links to attachment

8.7.9.2 MM7_submit.RES mapping

Information Element	Location	ElementName	Comments
Transaction ID	SOAP Header	TransactionID	
Message-Type	SOAP Body	MessageType	Defined as Root element of SOAP Body
MM7 Version	SOAP Body	MM7Version	Value is the number of the specification in which the schema has changed most recently, e.g. 5.2.0
Message ID	SOAP Body	MessageID	
Request Status	SOAP Body	StatusCode	See section 8.7.8.3
Request Status Text	SOAP Body	StatusText & Details	See section 8.7.8.3

Sample message submission

```
POST /mms-rs/mm7 HTTP/1.1
Host: mms.omms.com
Content-Type: multipart/related; boundary="NextPart_000_0028_01C19839.84698430"; type=text/xml;
    start="</tnn-200102/mm7-submit>"
Content-Length: nnnn
SOAPAction: ""

--NextPart_000_0028_01C19839.84698430
Content-Type:text/xml; charset="utf-8"
Content-ID: </tnn-200102/mm7-submit>

<?xml version="1.0" ?>
<env:Envelope xmlns:env="http://schemas.xmlsoap.org/soap/envelope/">
      <env:Header>
        <mm7:TransactionID
xmlns:mm7="http://www.3gpp.org/ftp/Specs/archive/23_series/23.140/schema/REL-5-MM7-1-3"
env:mustUnderstand="1">
            vas00001-sub
        </mm7:TransactionID>
    </env:Header>
    <env:Body>
        <SubmitReq xmlns="http://www.3gpp.org/ftp/Specs/archive/23_series/23.140/schema/REL-5-
MM7-1-3">
            <MM7Version>5.6.0</MM7Version>
            <SenderIdentification>
                <VASPID>TNN</VASPID>
                <VASID>News</VASID>
            </SenderIdentification>
            <Recipients>
                <To>
                    <Number>7255441234</Number>
                    <RFC2822Address displayOnly="true">7255442222@OMMS.com</RFC2822Address>
                </To>
                <Cc>
                    <Number>7255443333</Number>
                </Cc>
                <Bcc>
                    <RFC2822Address>7255444444@OMMS.com</RFC2822Address>
                </Bcc>
            </Recipients>
            <ServiceCode>gold-sp33-im42</ServiceCode>
            <LinkedID>mms00016666</LinkedID>
            <MessageClass>Informational</MessageClass>
            <TimeStamp>2002-01-02T09:30:47-05:00</TimeStamp>
            <EarliestDeliveryTime>2002-01-02T09:30:47-05:00</EarliestDeliveryTime>
            <ExpiryDate>P90D</ExpiryDate>
            <DeliveryReport>true</DeliveryReport>
            <Priority>Normal</Priority>
            <Subject>News for today</Subject>
            <ContentClass>video-rich</ContentClass>
            <DRMContent>true</DRMContent>
```

```
            <ChargedParty>Sender</ChargedParty>
            <DistributionIndicator>true</DistributionIndicator>
            <Content href="cid:SaturnPics-01020930@news.tnn.com" allowAdaptations="true"/>
        </SubmitReq>
    </env:Body>
</env:Envelope>

--NextPart_000_0028_01C19839.84698430
Content-Type: multipart/mixed; boundary="StoryParts 74526 8432 2002-77645"
Content-ID:<SaturnPics-01020930@news.tnn.com>

--StoryParts 74526 8432 2002-77645
Content-Type: text/plain; charset="us-ascii"

Science news, new Saturn pictures...

--StoryParts 74526 8432 2002-77645
Content-Type: image/gif;
Content-ID:<saturn.gif>
Content-Transfer-Encoding: base64

R0lGODdhZAAwAOMAAAAAAIGJjGltcDE0OOfWo6Ochbi1n1pmcbGojpKbnP/lpW54fBMTE1RYXEFO
…

--StoryParts 74526 8432 2002-77645--
--NextPart_000_0028_01C19839.84698430--
```

NOTE: The different encoding mechanisms, as defined by RFC2045 [44], can be utilized for content encoding.

The response message is sent by the MMS Relay/Server back to the VASP for the VAS application in a HTTP Response message.

```
HTTP/1.1  200 OK
Content-Type: text/xml; charset="utf-8"
Content-Length: nnnn

<?xml  version="1.0" ?>
<env:Envelope xmlns:env="http://schemas.xmlsoap.org/soap/envelope/">
      <env:Header>
        <mm7:TransactionID
xmlns:mm7="http://www.3gpp.org/ftp/Specs/archive/23_series/23.140/schema/REL-5-MM7-1-3"
env:mustUnderstand="1">
            vas00001-sub
        </mm7:TransactionID>
    </env:Header>
    <env:Body>
        <SubmitRsp xmlns="http://www.3gpp.org/ftp/Specs/archive/23_series/23.140/schema/REL-5-
MM7-1-3">
            <MM7Version>5.6.0</MM7Version>
            <Status>
                <StatusCode>1000</StatusCode>
                <StatusText>Success</StatusText>
            </Status>
            <MessageID>041502073667</MessageID>
        </SubmitRsp>
    </env:Body>
</env:Envelope>
```

Sample message submission with application addressing

```
POST /mms-rs/mm7 HTTP/1.1
Host: mms.omms.com
Content-Type: multipart/related; boundary="NextPart_000_0028_01C19839.84698430"; type=text/xml;
    start="</tnn-200102/mm7-submit>"
Content-Length: nnnn
SOAPAction: ""

--NextPart_000_0028_01C19839.84698430
Content-Type:text/xml; charset="utf-8"
Content-ID: </tnn-200102/mm7-submit>

<?xml version="1.0" ?>
<env:Envelope xmlns:env="http://schemas.xmlsoap.org/soap/envelope/">
      <env:Header>
        <mm7:TransactionID
xmlns:mm7="http://www.3gpp.org/ftp/Specs/archive/23_series/23.140/schema/REL-6-MM7-6-7"
env:mustUnderstand="1">
```

```
            vas00001-sub
        </mm7:TransactionID>
    </env:Header>
    <env:Body>
        <SubmitReq xmlns="http://www.3gpp.org/ftp/Specs/archive/23_series/23.140/schema/REL-6-
MM7-6-7">
            <MM7Version>6.7.0</MM7Version>
            <SenderIdentification>
                <VASPID>TNN</VASPID>
                <VASID>News</VASID>
            </SenderIdentification>
            <Recipients>
                <To>
                    <Number>7255441234</Number>
                    <RFC2822Address displayOnly="true">7255442222@OMMS.com</RFC2822Address>
                </To>
                <Cc>
                    <Number>7255443333</Number>
                </Cc>
                <Bcc>
                    <RFC2822Address>7255444444@OMMS.com</RFC2822Address>
                </Bcc>
            </Recipients>
            <ServiceCode>gold-sp33-im42</ServiceCode>
            <LinkedID>mms00016666</LinkedID>
            <MessageClass>Informational</MessageClass>
            <TimeStamp>2002-01-02T09:30:47-05:00</TimeStamp>
            <EarliestDeliveryTime>2002-01-02T09:30:47-05:00</EarliestDeliveryTime>
            <ExpiryDate>P90D</ExpiryDate>
            <DeliveryReport>true</DeliveryReport>
            <Priority>Normal</Priority>
            <Subject>News for today</Subject>
            <ChargedParty>Sender</ChargedParty>
            <DistributionIndicator>true</DistributionIndicator>
    <ApplicID>ifx.com.neon.MyPackage.MAFIA</ApplicID>
            <ReplyApplicID>ifx.com.neon.downloadedPackage.MAFIA</ReplyApplicID>
            <AuxApplicID>MAFIA instance #04</AuxApplicID>
        <Content href="cid:SaturnPics-01020930@news.tnn.com" allowAdaptations="true"/>
        </SubmitReq>
    </env:Body>
</env:Envelope>

--NextPart_000_0028_01C19839.84698430
Content-Type: multipart/mixed; boundary="StoryParts 74526 8432 2002-77645"
Content-ID:<SaturnPics-01020930@news.tnn.com>

--StoryParts 74526 8432 2002-77645
Content-Type: text/plain; charset="us-ascii"

Science news, new Saturn pictures...

--StoryParts 74526 8432 2002-77645
Content-Type: image/gif;
Content-ID:<saturn.gif>
Content-Transfer-Encoding: base64

R0lGODdhZAAwAOMAAAAAAIGJjGltcDE0OOfWo6Ochbi1n1pmcbGojpKbnP/lpW54fBMTE1RYXEFO
…

--StoryParts 74526 8432 2002-77645--
--NextPart_000_0028_01C19839.84698430--
```

NOTE: The different encoding mechanisms, as defined by RFC2045 [44], can be utilized for content encoding.

Again, the response message is sent by the MMS Relay/Server back to the VASP for the VAS application in a HTTP Response message.

```
HTTP/1.1  200 OK
Content-Type: text/xml; charset="utf-8"
Content-Length: nnnn

<?xml  version="1.0" ?>
<env:Envelope xmlns:env="http://schemas.xmlsoap.org/soap/envelope/">
      <env:Header>
        <mm7:TransactionID
xmlns:mm7="http://www.3gpp.org/ftp/Specs/archive/23_series/23.140/schema/REL-6-MM7-6-7"
env:mustUnderstand="1">
```

```
            vas00001-sub
        </mm7:TransactionID>
    </env:Header>
    <env:Body>
        <SubmitRsp xmlns="http://www.3gpp.org/ftp/Specs/archive/23_series/23.140/schema/REL-6-
MM7-6-7">
            <MM7Version>6.7.0</MM7Version>
            <Status>
                <StatusCode>1000</StatusCode>
                <StatusText>Success</StatusText>
            </Status>
            <MessageID>041502073667</MessageID>
            <ApplicID>ifx.com.neon.downloadedPackage.MAFIA</ApplicID>
            <ReplyApplicID>ifx.com.neon.MyPackage.MAFIA</ReplyApplicID>
            <AuxApplicID>session.ABC.DEF</AuxApplicID>
        </SubmitRsp>
    </env:Body>
</env:Envelope>
```

8.7.9.3 MM7_deliver.REQ Mapping

Information Element	Location	ElementName	Comments
Transaction ID	SOAP Header	TransactionID	
Message-Type	SOAP Body	MessageType	Defined as Root element of SOAP Body
MM7 Version	SOAP Body	MM7Version	Value is the number of the specification in which the schema has changed most recently, e.g. 5.2.0
VASP ID	SOAP Body	VASPID	
VAS ID	SOAP Body	VASID	
MMS Relay/Server ID	SOAP Body	MMSRelayServerID	
Linked ID	SOAP Body	LinkedID	Message-ID of linked message
Sender address	SOAP Body	Sender	
Recipient address	SOAP Body	Recipients	If none appear then Sender Address is used
Date and time	SOAP Body	TimeStamp	
Reply-Charging-ID	SOAP Body	ReplyChargingID	Should correspond to an ID that appeared in previous MM7_submit.REQ
Priority	SOAP Body	Priority	Enumeration – possible values: High, Normal, Low
Subject	SOAP Body	Subject	
Content type	MIME header of attachment	Content-Type	
MMS User Agent capabilities	SOAP body	UACapabilities	
Applic-ID	SOAP Body	ApplicID	
Reply-Applic-ID	SOAP Body	ReplyApplicID	
Aux-Applic-Info	SOAP Body	AuxApplicInfo	
Content	SOAP Body	Content	href:cid attribute links to attachment

8.7.9.4 MM7_deliver.RES

Information Element	Location	ElementName	Comments
Transaction ID	SOAP Header	TransactionID	
Message-Type	SOAP Body	MessageType	Defined as Root element of SOAP Body
MM7 Version	SOAP Body	MM7Version	Value is the number of the specification in which the schema has changed most recently, e.g. 5.2.0
Service code	SOAP Body	ServiceCode	
Request status	SOAP Body	StatusCode	See section 8.7.8.3
Request status text	SOAP Body	StatusText & Details	See section 8.7.8.3

Sample Deliver request and response

```
POST /mms/weather.xml HTTP/1.1
Host: www.yahoo.com
Content-Type: multipart/related; boundary="NextPart_000_0125_01C19839.7237929064"; type=text/xml;
    start="</cmvt256/mm7-deliver>"
Content-Length: nnnn
SOAPAction: ""

--NextPart_000_0125_01C19839.7237929064
Content-Type:text/xml; charset="utf-8"
Content-ID: </cmvt256/mm7-deliver>

<?xml version="1.0"?>
<env:Envelope xmlns:env="http://schemas.xmlsoap.org/soap/envelope/">
      <env:Header>
        <mm7:TransactionID
xmlns:mm7="http://www.3gpp.org/ftp/Specs/archive/23_series/23.140/schema/REL-6-MM7-1-4"
env:mustUnderstand="1">
            vas00324-dlvr
        </mm7:TransactionID>
    </env:Header>
    <env:Body>
        <!-- Example of MM7_deliverReq -->
        <DeliverReq xmlns="http://www.3gpp.org/ftp/Specs/archive/23_series/23.140/schema/REL-6-
MM7-1-4">
            <MM7Version>6.7.0</MM7Version>
                <VASPID>TNN</VASPID>
                <VASID>Reminder</VASID>
            <MMSRelayServerID>240.110.75.34</MMSRelayServerID>
            <LinkedID>wthr8391</LinkedID>
            <Sender>
                <RFC2822Address>97254265781@OMMS.com</RFC2822Address>
            </Sender>
            <TimeStamp>2002-04-15T14:35:21-05:00</TimeStamp>
            <Priority>Normal</Priority>
            <Subject>Weather Forecast</Subject>
            <Content href="cid:forecast-location200102-86453"/>
        </DeliverReq>
    </env:Body>
</env:Envelope>

--NextPart_000_0125_01C19839.7237929064
Content-Type:text/plain;charset="utf-8"
Content-ID:<forecast-location2000102-86453>

Los Angeles, Calif, USA
--NextPart_000_0125_01C19839.7237929064--
```

The deliver response message might look like this (with an application error code):

```
HTTP/1.1  200 OK
Content-Type: text/xml; charset="utf-8"
Content-Length: nnnn
```

```
<?xml version="1.0"?>
<env:Envelope xmlns:env="http://schemas.xmlsoap.org/soap/envelope/">
      <env:Header>
        <mm7:TransactionID
xmlns:mm7="http://www.3gpp.org/ftp/Specs/archive/23_series/23.140/schema/REL-6-MM7-1-4"
env:mustUnderstand="1">
            vas00324-dlvr
        </mm7:TransactionID>
    </env:Header>
    <env:Body>
       <env:Fault>
            <faultcode>env:Client</faultcode>
            <faultstring>Client error</faultstring>
            <detail>
        <VASPErrorRsp xmlns="http://www.3gpp.org/ftp/Specs/archive/23_series/23.140/schema/REL-6-
MM7-1-4">
                    <MM7Version>6.7.0</MM7Version>
                    <Status>
                        <StatusCode>4006</StatusCode>
                        <StatusText>Service Unavailable</StatusText>
                        <Details>
                            <app:Reason xmlns:app="http://vendor.example.com/MM7Extension">Location
not covered in service</app:Reason>
                        </Details>
                    </Status>
                </ VASPErrorRsp>
            </detail>
        </env:Fault>
    </env:Body>
</env:Envelope>
```

8.7.9.5 MM7_cancel.REQ mapping

Information Element	Location	Element-name	Comments
Transaction ID	SOAP Header	TransactionID	
Message-Type	SOAP Body	MessageType	Defined as Root element of SOAP Body
MM7 Version	SOAP Body	MM7Version	Value is the number of the specification in which the schema has changed most recently, e.g. 5.2.0
VASP ID	SOAP Body	VASPID	
VAS ID	SOAP Body	VASID	
Sender Address	SOAP Body	SenderAddress	
Message ID	SOAP Body	MessageID	
Applic-ID	SOAP Body	ApplicID	
Reply-Applic-ID	SOAP Body	ReplyApplicID	
Aux-Applic-Info	SOAP Body	AuxApplicInfo	

8.7.9.6 MM7_cancel.RES mapping

Information Element	Location	ElementName	Comments
Transaction ID	SOAP Header	TransactionID	
Message-Type	SOAP Body	MessageType	Defined as Root element of SOAP Body
MM7 Version	SOAP Body	MM7Version	Value is the number of the specification in which the schema has changed most recently, e.g. 5.2.0
Request status	SOAP Body	StatusCode	See section 8.7.8.3
Request status text	SOAP Body	StatusText & Details	See section 8.7.8.3

The following shows an interchange of a MM7_cancel.REQ and MM7_cancel.RES to illustrate a SOAP message that does not include a multimedia content part.

```
POST /mms-rs/mm7 HTTP/1.1
Host: mms.omms.com
Content-Type: text/xml; charset="utf-8"
Content-Length: nnnn
SOAPAction: ""

<?xml version="1.0" ?>
<env:Envelope xmlns:env="http://schemas.xmlsoap.org/soap/envelope/">
      <env:Header>
        <mm7:TransactionID
xmlns:mm7="http://www.3gpp.org/ftp/Specs/archive/23_series/23.140/schema/REL-5-MM7-1-3"
env:mustUnderstand="1">
                vas0000—can
        </mm7:TransactionID>
    </env:Header>
    <env:Body>
        <CancelReq xmlns="http://www.3gpp.org/ftp/Specs/archive/23_series/23.140/schema/REL-5-MM7-1-
3">
            <MM7Version>5.6.0</MM7Version>
            <SenderIdentification>
                <VASPID>TNN</VASPID>
                <VASID>Reminder</VASID>
            </SenderIdentification>
            <MessageID>mms000222222</MessageID>
        </CancelReq>
    </env:Body>
</env:Envelope>

HTTP/1.1  200 OK
Content-Type: text/xml; charset="utf-8"
Content-Length: nnnn

<?xml version="1.0" ?>
<env:Envelope xmlns:env="http://schemas.xmlsoap.org/soap/envelope/">
      <env:Header>
        <mm7:TransactionID
xmlns:mm7="http://www.3gpp.org/ftp/Specs/archive/23_series/23.140/schema/REL-5-MM7-1-3"
env:mustUnderstand="1">
                vas0000—can
        </mm7:TransactionID>
    </env:Header>
    <env:Body>
        <CancelRsp xmlns="http://www.3gpp.org/ftp/Specs/archive/23_series/23.140/schema/REL-5-MM7-1-
3">
            <MM7Version>5.6.0</MM7Version>
            <Status>
                <StatusCode>1000</StatusCode>
                <StatusText>Success</StatusText>
            </Status>
        </CancelRsp>
    </env:Body>
</env:Envelope>
```

8.7.9.7 MM7_replace.REQ mapping

Information Element	Location	ElementName	Comments
Transaction ID	SOAP Header	TransactionID	
Message-Type	SOAP Body	MessageType	Defined as Root element of SOAP Body
MM7 Version	SOAP Body	MM7Version	Value is the number of the specification in which the schema has changed most recently, e.g. 5.2.0
VASP ID	SOAP Body	VASPID	
VAS ID	SOAP Body	VASID	
Sender address	SOAP Body	SenderAddress	
Message ID	SOAP Body	MessageID	
Service code	SOAP Body	ServiceCode	Information supplied for billing purposes – exact format is implementation dependent
Date and time	SOAP Body	TimeStamp	
Earliest delivery time	SOAP Body	EarliestDeliveryTime	Date format – absolute or relative
Read reply	SOAP Body	ReadReply	Boolean – true or false
Content Class	SOAP Body	ContentClass	Enumeration – possible values: text, image-basic, image-rich, video-basuc, video-rich, megapixel, content-basic, content-rich
DRM Content	SOAP Body	DRMContent	Boolean – true or false
Adaptations	SOAP Body	allowAdaptations	Attribute of *Content* element Boolean – true or false
Content type	MIME part Header	Content-Type	
Content	SOAP Body	Content	href:cid attribute links to attachment
Message Distribution Indicator	SOAP Body	DistributionIndicator	Boolean – true or false
Applic-ID	SOAP Body	ApplicID	
Reply-Applic-ID	SOAP Body	ReplyApplicID	
Aux-Applic-Info	SOAP Body	AuxApplicInfo	

8.7.9.8 MM7_replace.RES mapping

Information Element	Location	ElementName	Comments
Transaction ID	SOAP Header	Transaction-ID	
Message-Type	SOAP Body	Message-Type	Defined as Root element of SOAP Body
MM7 Version	SOAP Body	MM7-Version	Value is the number of the specification in which the schema has changed most recently, e.g. 5.2.0
Request status	SOAP Body	StatusCode	See section 8.7.8.3
Request status text	SOAP Body	StatusText & Details	See section 8.7.8.3

8.7.9.9 MM7_delivery_report.REQ mapping

Information Element	Location	ElementName	Comments
Transaction ID	SOAP Header	TransactionID	
Message-Type	SOAP Body	MessageType	Defined as Root element of SOAP Body
MM7 Version	SOAP Body	MM7Version	Value is the number of the specification in which the schema has changed most recently, e.g. 5.2.0
MMS Relay/Server ID	SOAP Body	MMSRelayServerID	
Message ID	SOAP Body	MessageID	
Recipient address	SOAP Body	Recipient	
VASP ID	SOAP Body	VASPID	
VAS ID	SOAP Body	VASID	
Sender address	SOAP Body	Sender	
Date and time	SOAP Body	Date	
MM Status	SOAP Body	MMStatus	Enumeration – possible values: Expired, Retrieved, Rejected, Indeterminate, Forwarded, Delivery Condition Not Met
Status text	SOAP Body	StatusText	
MMS User Agent Capabilities	SOAP Body	UACapabilities	
Applic-ID	SOAP Body	ApplicID	
Reply-Applic-ID	SOAP Body	ReplyApplicID	
Aux-Applic-Info	SOAP Body	AuxApplicInfo	

8.7.9.10 MM7_delivery_report.RES mapping

Information Element	Location	ElementName	Comments
Transaction ID	SOAP Header	TransactionID	
Message-Type	SOAP Body	MessageType	Defined as Root element of SOAP Body
MM7 Version	SOAP Body	MM7Version	Value is the number of the specification in which the schema has changed most recently, e.g. 5.2.0
Request Status	SOAP Body	StatusCode	See section 8.7.8.3
Request Status text	SOAP Body	StatusText & Details	See section 8.7.8.3

8.7.9.11 MM7_read_reply.REQ mapping

Information Element	Location	ElementName	Comments
Transaction ID	SOAP Header	TransactionID	
Message-Type	SOAP Body	MessageType	Defined as Root element of SOAP Body
MM7 Version	SOAP Body	MM7Version	Value is the number of the specification in which the schema has changed most recently, e.g. 5.2.0
MMS Relay/Server ID	SOAP Body	MMSRelayServerID	
Message ID	SOAP Body	MessageID	
Recipient address	SOAP Body	Recipient	
Sender address	SOAP Body	Sender	
VASP ID	SOAP Body	VASPID	
VAS ID	SOAP Body	VASID	
Date and time	SOAP Body	TimeStamp	
Read Status	SOAP Body	MMStatus	Enumeration – possible values: Indeterminate, Read, Deleted without Read
Status text	SOAP Body	StatusText	
Applic-ID	SOAP Body	ApplicID	
Reply-Applic-ID	SOAP Body	ReplyApplicID	
Aux-Applic-Info	SOAP Body	AuxApplicInfo	

8.7.9.12 MM7_read_reply.RES mapping

Information Element	Location	ElementName	Comments
Transaction ID	SOAP Header	TransactionID	
Message-Type	SOAP Body	MessageType	Defined as Root element of SOAP Body
MM7 Version	SOAP Body	MM7Version	Value is the number of the specification in which the schema has changed most recently, e.g. 5.2.0
Request status	SOAP Body	StatusCode	See section 8.7.8.3
Request status text	SOAP Body	StatusText & Details	See section 8.7.8.3

8.7.9.13 MM7_RS_error.RES mapping

Information Element	Location	ElementName	Comments
Transaction ID	SOAP Header	TransactionID	
Message-Type	SOAP Body	MessageType	Defined as Root element of SOAP Body
MM7 Version	SOAP Body	MM7Version	Value is the number of the specification in which the schema has changed most recently, e.g. 5.2.0
Error status	SOAP Body	StatusCode	See section 8.7.8.3
Error status text	SOAP Body	StatusText & Details	See section 8.7.8.3

8.7.9.14 MM7_VASP_error.RES mapping

Information Element	Location	Element-name	Comments
Transaction ID	SOAP Header	Transaction-ID	
Message-Type	SOAP Body	Message-Type	Defined as Root element of SOAP Body
MM7 Version	SOAP Body	MM7-Version	Value is the number of the specification in which the schema has changed most recently, e.g. 5.2.0
Error status	SOAP Body	StatusCode	See section 8.7.8.3
Error status text	SOAP Body	StatusText & Details	See section 8.7.8.3

8.7.9.15 MM7_extended_cancel.REQ mapping

Information Element	Location	Element-name	Comments
Transaction ID	SOAP Header	TransactionID	
Message-Type	SOAP Body	MessageType	Defined as Root element of SOAP Body
MM7 Version	SOAP Body	MM7Version	Value is the number of the specification in which the schema has changed most recently, e.g. 5.2.0
VASP ID	SOAP Body	VASPID	
VAS ID	SOAP Body	VASID	
Sender Address	SOAP Body	SenderAddress	
Cancel_ID	SOAP Body	CancelID	

8.7.9.16 MM7_extended_cancel.RES mapping

Information Element	Location	ElementName	Comments
Transaction ID	SOAP Header	TransactionID	
Message-Type	SOAP Body	MessageType	Defined as Root element of SOAP Body
MM7 Version	SOAP Body	MM7Version	Value is the number of the specification in which the schema has changed most recently, e.g. 5.2.0
Request status	SOAP Body	StatusCode	See section 8.7.8.3

The following shows an interchange of a MM7_extended_cancel.REQ and MM7_extended_cancel.RES to illustrate a SOAP message that does not include a multimedia content part.

```
POST /mms-rs/mm7 HTTP/1.1
Host: mms.omms.com
Content-Type: text/xml; charset="utf-8"
Content-Length: nnnn
SOAPAction: ""

<?xml version="1.0" ?>
<env:Envelope xmlns:env="http://schemas.xmlsoap.org/soap/envelope/">
      <env:Header>
        <mm7:TransactionID
xmlns:mm7="http://www.3gpp.org/ftp/Specs/archive/23_series/23.140/schema/REL-5-MM7-1-3"
env:mustUnderstand="1">
                vas0000–can
        </mm7:TransactionID>
    </env:Header>
    <env:Body>
        <extendedCancelReq xmlns="http://www.3gpp.org/ftp/Specs/archive/23_series/23.140/schema/REL-
5-MM7-1-3">
```

```
            <MM7Version>5.6.0</MM7Version>
            <SenderIdentification>
                <VASPID>TNN</VASPID>
                <VASID>Reminder</VASID>
            </SenderIdentification>
            <CancelID>mms000222222</CancelID>
        </extendedCancelReq>
    </env:Body>
</env:Envelope>

HTTP/1.1  200 OK
Content-Type: text/xml; charset="utf-8"
Content-Length: nnnn

<?xml version="1.0" ?>
<env:Envelope xmlns:env="http://schemas.xmlsoap.org/soap/envelope/">
      <env:Header>
        <mm7:TransactionID
xmlns:mm7="http://www.3gpp.org/ftp/Specs/archive/23_series/23.140/schema/REL-5-MM7-1-3"
env:mustUnderstand="1">
                vas0000—can
        </mm7:TransactionID>
    </env:Header>
    <env:Body>
        <extendedCancelRsp xmlns="http://www.3gpp.org/ftp/Specs/archive/23_series/23.140/schema/REL-
5-MM7-1-3">
            <MM7Version>5.6.0</MM7Version>
            <Status>
                <StatusCode>1000</StatusCode>
            </Status>
        </extendedCancelRsp>
    </env:Body>
</env:Envelope>
```

8.7.9.17 MM7_extended_replace.REQ mapping

Information Element	Location	ElementName	Comments
Transaction ID	SOAP Header	TransactionID	
Message-Type	SOAP Body	MessageType	Defined as Root element of SOAP Body
MM7 Version	SOAP Body	MM7Version	Value is the number of the specification in which the schema has changed most recently, e.g. 5.2.0
VASP ID	SOAP Body	VASPID	
VAS ID	SOAP Body	VASID	
Service code	SOAP Body	ServiceCode	Information supplied for billing purposes – exact format is implementation dependent
Replace_ID	SOAP Body	ReplaceID	This identifies the previously sent VAS/VASP MM that need to be replaced by this MM
Date and time	SOAP Body	TimeStamp	
Earliest delivery time	SOAP Body	EarliestDeliveryTime	Date format – absolute or relative
Time of Expiry	SOAP Body	ExpiryDate	
Delivery Report	SOAP Body	DeliveryReport	Boolean – true or false
Read reply	SOAP Body	ReadReply	Boolean – true or false
Adaptations	SOAP Body	AllowAdaptations	Attribute of *Content* element Boolean – true or false
Content type	MIME part Header	Content-Type	
Content	SOAP Body	Content	href:cid attribute links to attachment

8.7.9.18 MM7_extended_replace.RES mapping

Information Element	Location	ElementName	Comments
Transaction ID	SOAP Header	Transaction-ID	
Message-Type	SOAP Body	Message-Type	Defined as Root element of SOAP Body
MM7 Version	SOAP Body	MM7-Version	Value is the number of the specification in which the schema has changed most recently, e.g. 5.2.0
Message ID	SOAP Body	MessageID	
Request status	SOAP Body	StatusCode	See section 8.7.8.3

8.8 Technical realisation of MMS on reference point MM8

This reference point is further specified in TS 32.240 [80] and TS 32.270 [81].

8.9 Technical realisation of MMS on reference point MM9

This reference point is further specified in TS 32.240 [80] and TS 32.270 [81].

8.10 Technical realisation of MMS on reference point MM10

The stage 3 description of this reference point can be found in TS 29.140 [86].

The MMSE may support the interrogation of an external MSCF. Section 7.1.17 specifies the applicability of the MM10 interrogation to certain MMS services. The MM10 message flow may be invoked during MM1 submission. The figures below describes the Message flows between the MMS Relay/Server and an external MSCF.

In the following example the submission of a MM through MM1 is shown.

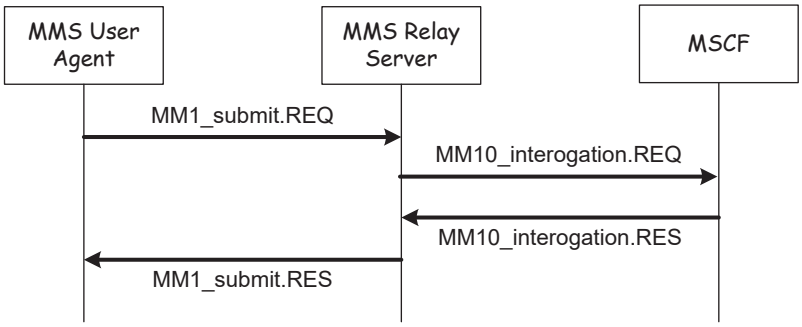

Figure 14: Message Flow Example for the MM1 submit traffic case

In the following example the MM1 delivery is shown.

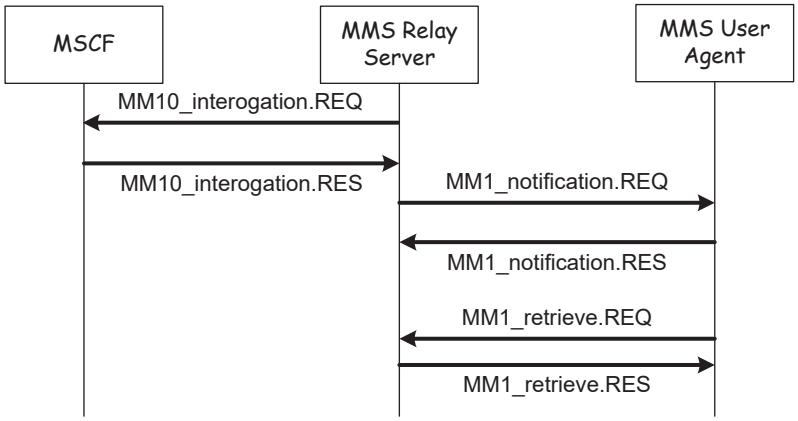

Figure 15: Message Flow Example for the MM1 notification traffic case

In the following example the submission of a MM through MM7 is shown.

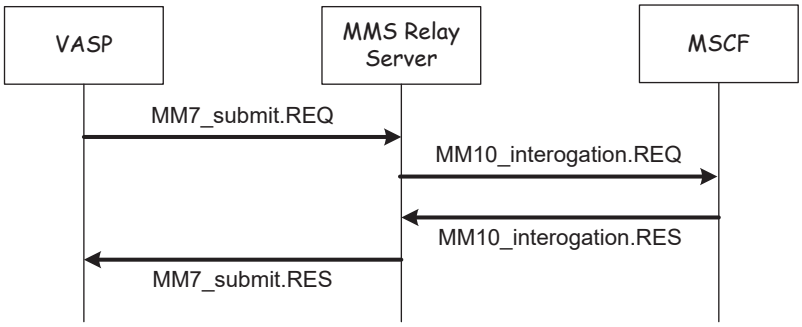

Figure 16: Message Flow Example for the MM7 submit traffic case

8.10.1 Interrogation of the Messaging Service Control Function (MSCF)

This section addresses the operations necessary for a MSCF to provide the service by sending a interrogation Message from the Relay/Server to the MSCF. The involved abstract messages are outlined in the table below from type and direction points of view.

Table 85: Abstract messages for interrogation of the Address resolution Node

Abstract messages	Type	Direction
MM10_Interrogation.REQ	Request	MMS Relay/Server -> MSCF
MM10_ Interrogation.RES	Response	MSCF -> MMS Relay/Server

8.10.2 Normal Operation

After reaching the specified trigger point the MMS Relay/Server sends a MM10_interrogation.REQ to the MSCF. This Message includes a information set received in the incoming MM. Furthermore the information of the reached trigger Point as well as the information of the incoming interface shall be included in the MM10_Interrogation.REQ Abstract Message. The MSCF reacts with a MM10_Interrogation.RES where relevant information fields are substituted or added if necessary. Furthermore, charging relevant information may included in the response. All this information needs to reflected in a appropriate CDR.

The received information shall be taken for the further handling of the MM.

8.10.3 Abnormal Operation

If no response on an MM10_interrogation.REQ is received in a appropriate timeframe the MMS Relay/Server shall process according the information given by the specific trigger information.

The further handling of potential Error scenarios (resulting from incorrect addresses) is subject of the associated Message handling process.

8.10.4 Features

Served User Identity: This field contains the public identity of served user. It shall be filled, depending of the traffic case. Possible values are: MM1 Submission: Sender, MM1 delivery: Recipient, MM7 submission: VASP ID

Server User IMSI: This field contains the IMSI of the served user.

Service Key: A operator configurable string which identifies the target application at the MSCF.

Addressing: In the MM10_interrogation.REQ the MMS Relay/Server shall provide the initial MM address information to the MSCF. In the MM10_interrogation.RES the MSCF may return the address information unmodified or modified according to the requirements of the operator specific service.

Trigger Event: The Trigger point, which initiated the sending of the MM10_Interrogation.REQ.

Originating Interface: Indicator of the interface from which the MM was originated.

Event Time Stamp: The originator MMS User Agent may time stamp the MM.

Reporting: The originator MMS User Agent may request a delivery report for the MM. In addition, the originator MMS User Agent may request a read-reply report when the user has viewed the MM. This feature allows the MSCF to override the request provided by the MMS User Agent. This feature shall only be invoked if there is an appropriate mutual agreement between the subscriber and the network opertor.

Sender Visibility: A request to show or hide the sender's identity when the message is delivered to the recipient. This feature allows the MSCF to override the request provided by the MMS User Agent. This feature shall only be invoked if there is an appropriate mutual agreement between the subscriber and the network opertor.

Result Code: The Result Code determines whether the request have been accepted or rejected by the MSCF or whether an error occurred during processing.

CDR Information: Billing information, which are introduced by the MSCF. This information will be transparently copied to the CDR for post-processing proposes, or transparently forwarded to the pre paid systems.

8.10.5 Information Elements

Table 86: Information elements in the MM10_Interrogation.REQ .

Information element	Presence	Description
Message Type	Mandatory	Identifies this message as MM10_interrogation.REQ
Trigger Event	Manadory	The Trigger point, which initiated the sending of the MM10_Interrogation.REQ
Served User Identity	Mandatory	The identity of the served user depending on the traffic case.
Served User IMSI	Optional	The IMSI of the served user
Initial Recipient address	Mandatory	The address of the recipient(s) of the MM. Multiple addresses are possible.
Originating Interface	Mandatory	Indicator of the interface from which the MM was originated
Service Key	Optional	A operator configurable string which identifies the target application at the MSCF
Sender address	Optional	The address of the MM originator.
Delivery report	Optional	A request for delivery report.
Read Reply	Optional	A request for read reply report.
Sender visibility	Optional	A request to show or hide the sender's identity when the message is delivered to the recipient.

Table 87: Information elements in the MM10_Interrogation.RES .

Information element	Presence	Description
Message Type	Mandatory	Identifies this message as MM10_interrogation.RES
Result Code	Mandatory	The Result Code determines whether the request have been accepted or rejected by the MSCF or whether an error occurred during processing.
Presentation address	Optional	Recipient address used for presentation 71
Routeing Address	Optional	Recipient Address used for routeing of the message
Sender Address	Optional	Sender Address used for presentation
Read reply	Optional	A request for read reply report.
CDR information	Optional	Billing information, which are introduced by the MSCF. This information will be transparently copied to the CDR for post-processing purposes, or transparently forwarded to the pre paid systems

Annex A (informative): Examples of MMS architectural implementations

A.1 Introduction

This informative annex is intended to provide architectural examples based on the general architecture as outlined in clause 4 to show implementations for different business models. The focus is upon the various MMS Relay - MMS Server and MMS Relay/Server – External Server scenarios, whereas the MMS Relay/Server - MMS User Agent interface is assumed to be as stated in clause 6.3. Each of the following subclauses provides only one possible scenario, however a combination could be feasible. Please note that each functional element should be understood as a logical entity and may be combined due to implementation reasons.

A.2 Example of combined MMS-Relay/Server

This scenario shows the case where the two logical entities, MMS Relay and MMS Server, are combined into a single physical entity.

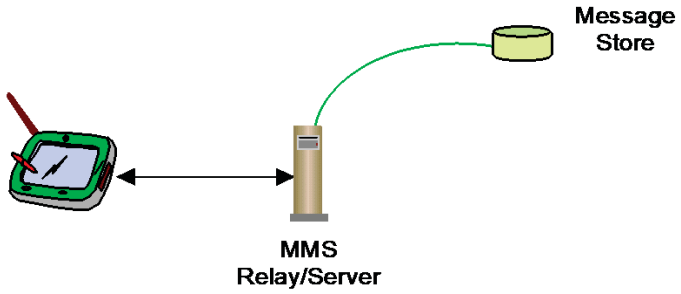

Figure A.1: Example of combined MMS-Relay/Server

A.3 Example of non-combined MMS-Relay and MMS-Server

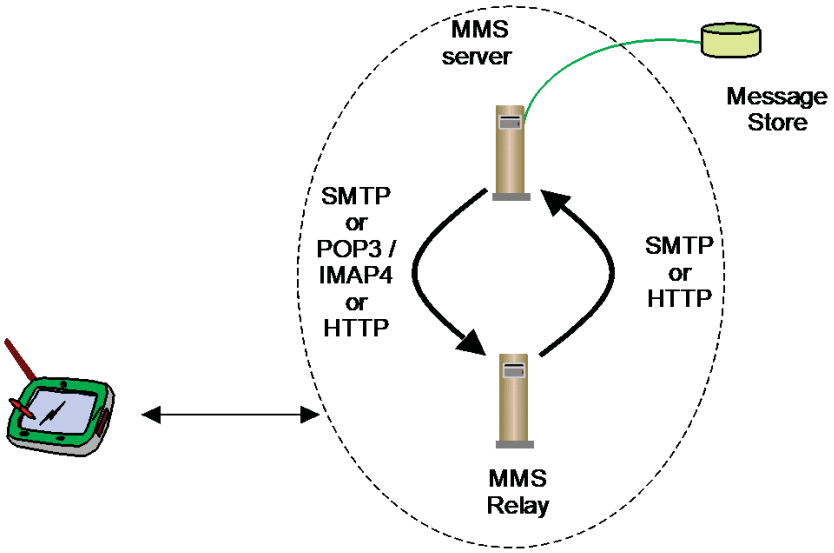

Figure A.2: Example of non-combined MMS-Relay and MMS-Server

For the transfer of messages between an MMS-Relay and an MMS-Server the use of SMTP and POP3[34]/IMAP4[35] or HTTP as illustrated in Figure A.2 is identified as appropriate.

If the protocol is SMTP for up- and download of messages to the server, then it may be identical to the one used between different MMS Relay/Servers as specified in the clause 6.6.

A.4 Example of MMS interaction with T.30 Facsimile Services

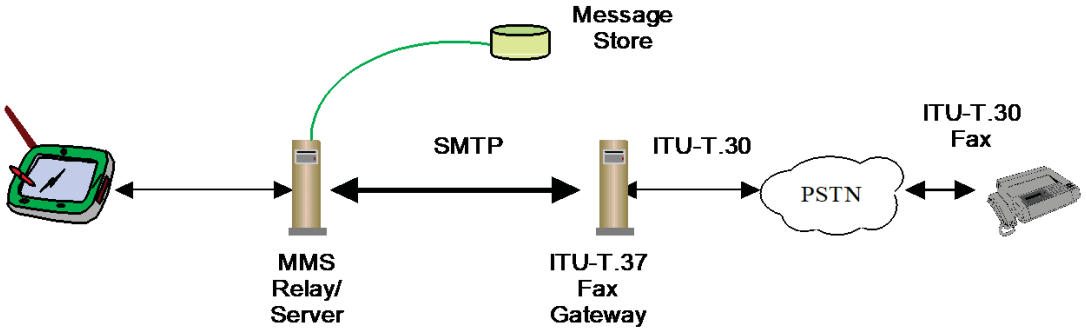

Figure A.3: Example of MMS interaction with Facsimile Services based on ITU-T.37

For the transfer of facsimile data via store-and-forward mechanisms ITU-T.37 [31] procedures have been standardised. These are identified as appropriate in the MMSE for the interworking with T.30 [32] facsimile services. What the relevant MMSE parts are supposed to look like for a T.37 approach is depicted in figure A.3. The MMS Relay/Server interfaces with a T.37 Fax Gateway. For the Gateway's communication with the MMS Relay/Server the appropriate protocol is SMTP. I.e., the protocol to be used on the interface between MMS-Relay/Server and the Fax GW is identical to the one used between different MMS Relay/Servers as specified in clause 6.6.

Towards the PSTN the Fax-GW terminates the T.30 facsimile protocol. Mobile terminated fax data will be converted into TIFF[36] image format and forwarded to the MMS Relay/Server as an attachment in an IETF internet email. In case of mobile originated fax messages the Fax-GW receives a written email provided with the receiver's fax number from the MMS Relay/Server. Depending on the functions of the Fax-GW this email may contain plain text only or additional attachments, too. Although T.37 requires only TIFF format support there are Fax-GWs out on the market that permit many different formats to be included.

A.5 Example of MMS interaction with 2G/3G Voice Mailboxes

MMS interaction with voice mailbox systems should be performed on a non-realtime basis. Figure A.4 illustrates an example architecture for the incorporation of voice mailboxes.

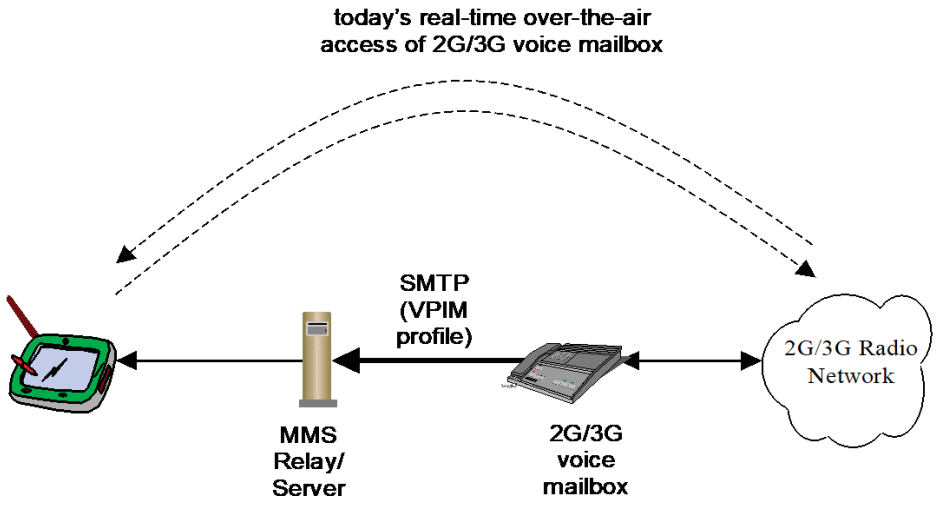

Figure A.4: First Example of MMS interaction with 2G/3G Voice Mailbox based on VPIM

The Voice Profile for Internet Mail Version 2, VPIMv2, provides format extensions for MIME supporting the transmission of voice messages over standard Internet E-Mail systems. The VPIM concept was developed by the Electronic Messaging Association (EMA). After VPIMv2 had been reviewed by the IETF it became RFC 2421 [33].

The VPIM specification allows voice records to be MIME encapsulated and sent as Internet mail attachments via ESMTP or retrieved as Internet mail attachments via POP3 [34] or IMAP4[35]. The MIME type used for voice messages is "multipart/voice-message" that includes an "audio/*" part and possibly additional parts for a voice signature or Vcard .

For the interaction of MMS with voice mailboxes, the voice mailbox may forward received voice records as VPIM messages via SMTP to the MMS Relay/Server. This implies that voice messages' download is always done via the MMS service. In this case the protocol to be used on the interface between MMS-Relay/Server and the voice mailbox is ESMTP and thus identical to the one used between different MMS Relay/Servers as specified in clause 6.6. The message conversion that is necessary for this transfer is specified in Annex D1.

Alternatively, the MMS Relay/Server may poll the voice mailbox via POP3 or IMAP4 for new messages received. Messages the user wants to retrieve via the MMS service can then be downloaded via POP3/IMAP4 from the voice mailbox to the MMS Relay/Server from where they are delivered to the MMS User Agent. This enables the user to do both, retrieve voice messages via today's realtime voice mail services or as an MM. In any case it is expected that the voice mailbox is still the owner of the message and as a consequence responsible for the storage.

As an alternative the MMS interworking with a 2G/3G Voice Mailbox System could be envisaged via an HTTP interface as depicted in figure A.5.

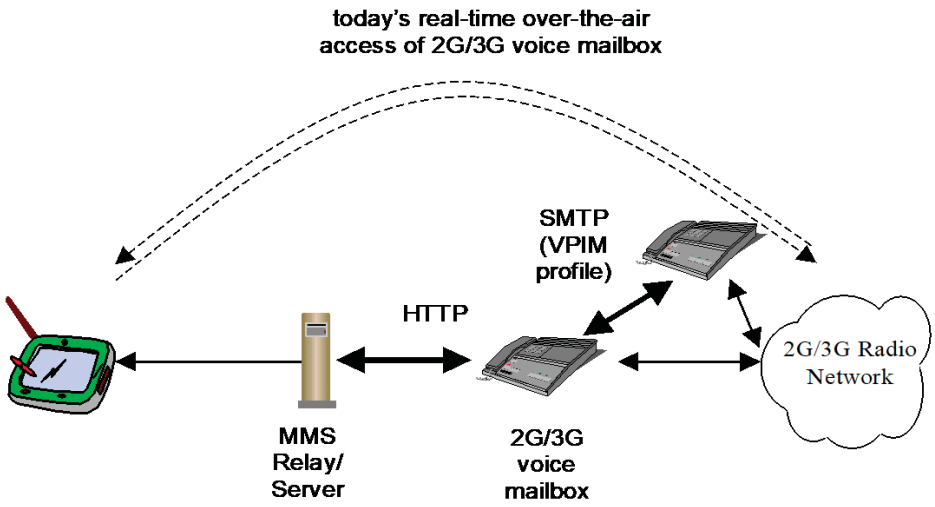

Figure A.5: Second example of MMS interaction with 2G/3G Voice Mailbox based on HTTP

A.6 Example of interaction with Internet E-Mail Messaging

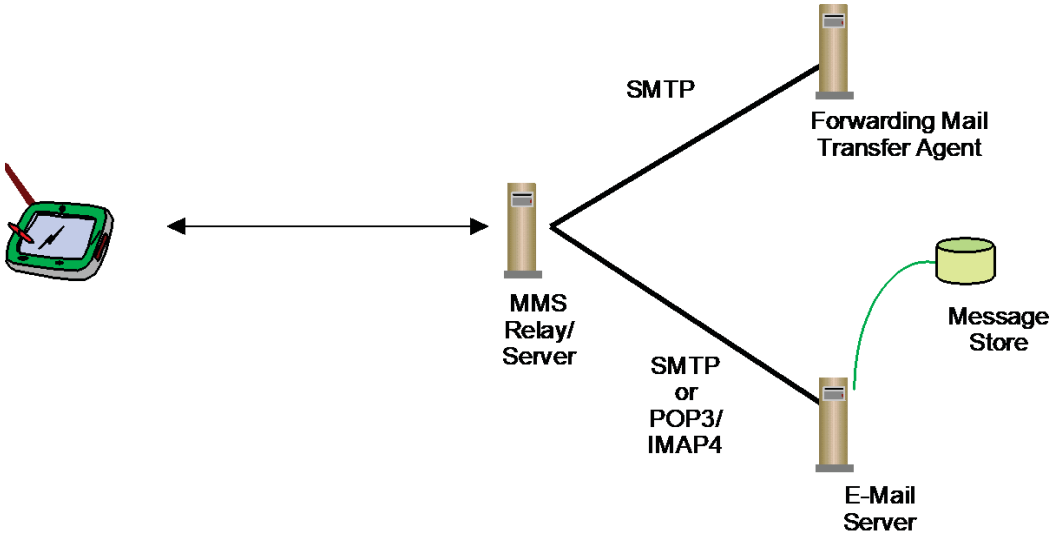

Figure A.6 Example of interaction with Internet E-Mail messaging

In this architecture the server will be an E-Mail server providing post office services which are accessible e.g. via POP3 [34] or IMAP[35] for Internet E-Mail retrieval in the MMSE or are accessible to the MMS Relay/Server using SMTP. The MMS Relay/Server will send messages that are to be transmitted as Internet E-Mail via SMTP.

In the case of retrieval and sending of MMs from and to the Internet Email service is done via SMTP, the protocol to be used on the interface between MMS Relay/Server and the Mail Transfer Agent, MTA/Email Server is identical to the one used between different MMS-Relays as specified in clause 6.6.

A.7 Example of interaction with Short Message Service, SMS

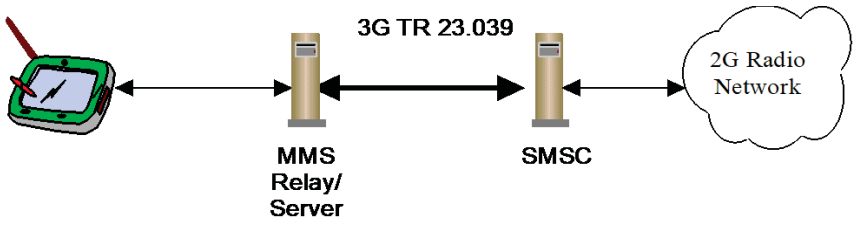

Figure A.7: Example of MMS interaction with SMSC

Depending on the SMSC manufacturer the MMS Relay/Server either can be directly connected to the SMSC (as shown in figure A.7) or an additional SMS-Gateway has to be added. In the latter case the SMS-GW has to be located between the MMS Relay/Server and the SMSC and provides the mapping of one or several SMSC access protocol (mapping between MMS Relay/Server SMSC access protocol and operator's existing SMSC access protocol). Currently several different SMSC access protocols are defined in 3GPP TR 23.039 [37].

A.8 Example of Integration with Unified Messaging System (UMS)

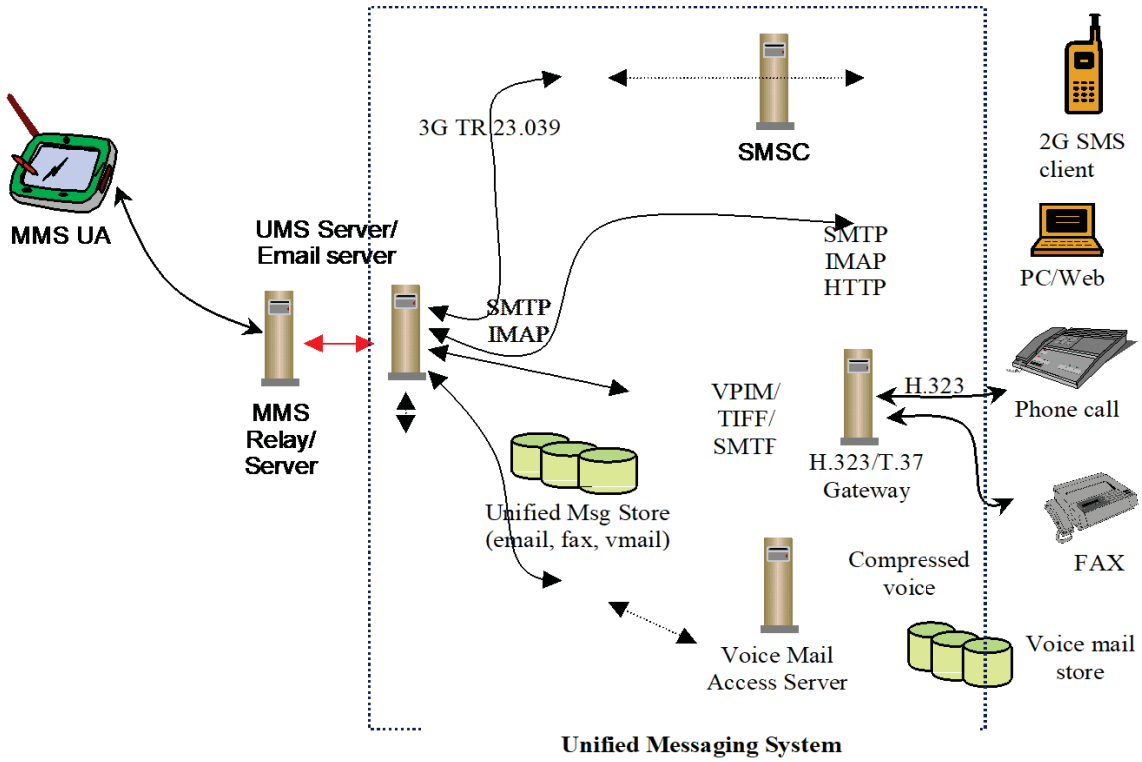

Figure A.8: Example of MMS integration with UMS

Many carriers are operating or planning to operate Unified Messaging System (UMS) platforms, as well as conform to 3GPP specifications. Ideally, newly deployed UMS platforms will use MMS as their wireless access User Agents. However, newly deployed MMS systems will likely co-exist and integrate with Unified Messaging systems, (UMS), voice mail systems (VMS), and email systems. UMS will involve other access methods, such as PC mail access, Web browser access, PSTN voice phone access, etc., all of which are outside the scope of 3GPP standardization efforts.

Some operators may choose to integrate their MMS and UMS services. Even with a complete migration strategy, large email systems and VMS systems may require lengthy migration periods during which an integrated operation between the 3GPP and legacy systems must occur. Also, some installations will require permanent integrations, where 3GPP systems continuously interoperate with a legacy UMS or a legacy VMS.

The above diagram depicts a possible integrated architecture, building on the previous use cases, where a 3GPP MMS Relay/Server interoperates with a UMS that connects to VMS, SMS, fax, and email.

Access from MMS UA occurs through the MMS Relay/Server. The MMS Relay/Server obtains email, voice, and/or fax messages from the UMS. PC clients access through the UM servers which may be integrated with the MMS servers by some operators. In this case a unified mailbox will be presented to both MMS users and others who access the system via other devices.

In addition, the UMS Server could possibly stream compressed voice from the VMS, assuming that streaming support is available in the servers as well as the clients. It could also establish a CS connection (using for example WTA methods to the wireless terminal.)

Voice mail and faxes can also originate from a voice/fax gateway server, which exists in both the legacy VMS as well as a UMS. Faxes can be sent out to remote fax numbers via the fax gateway. In that case the gateway would convert the VM or Fax to VPIM based email messages.

Access to the VMS and UMS should occur via open standard protocols, such as POP3, IMAP4, WebDAV, T.30, H.323, etc.

Annex B (informative): MMS Stage 3 Implementation

WAP/OMA implementation (stage 3) for the MM1 reference point of MMS, as defined in this specification, is available in [82].

Annex C (informative): Charging Data Records

This annex describes information of MMs/abstract messages which may be required for inclusion into Charging Data Records (CDR's) for MMS for the purpose of Billing and Traceability in the operators post-processing system. Further details on the CDR content and transport for MMS are described in the 3GPP TS 32.270 [81].

This list may include:

- Message –ID of Multimedia Message
- Recipient address(es)
- Sender address
- Message size
- Time stamp for submission time, earliest delivery time and time of expiry
- Duration of transmission (for streaming purposes)
- Duration of storage (in the MMS Relay/Server)
- Type of message: (e.g. notification, message MM, delivery report, read-reply)
- Bearer type used
- Content information (e.g. audio, picture, video, text,)
- Message class (e.g. advertisement/informational)
- Delivery Report Request
- Read Reply Request
- Charging Indicator (e.g. Pre paid charging, Reply charging, Charged Party)
- MM7 service code
- MM Status (e.g. delivered, rejected, expired, delivery pending).
- Indication of forwarding
- Conversion of type and media
- Priority of the MM
- Linked ID
- VASP ID
- VAS ID
- Reply-Charging
- Content type
- Reply-Charging-ID
- Charged Party, Charged Party ID
- MCC + MNC
- MSCF CDR information

- Sender address provided by MSCF
- Recipient address(es) provided by MSCF
- MSCF service Key
- MSCF host and realm information
- Applic-ID
- Reply-Applic-ID
- Aux-Applic-Info
- Replace ID
- Cancel ID

The following information elements at least will be considered for the future.

- Identification if a message has been sent to a pre-defined group

NOTE: Some of the above fields may not be available in the MMS Relay/Server e.g. due to network implementation options. Also some fields may not be directly available from MMS Relay/Server CDRs but defined in the Charging and Billing system.

Annex D (informative): MM3 principles

D.1 Sending of MMs

On sending an MM to an external server the MMS Relay/Server:

- should map as many fields as possible to corresponding fields of the message format or protocol of the external server while suppressing MMS-only relevant fields (e.g. MMS-version) or sensitive fields (e.g. originator Address when address hiding is requested) and fields that cannot be mapped (e.g. Content-type in case fax gateway).
- In the case the external server uses RFC 2822 formatted messages the mapping should be according to the mapping on MM4 under consideration of the above mentioned constraints.
- May add relevant fields that cannot be mapped to fields of the message format or protocol of the external server to the content body of the message if suitable (e.g. Print Content-Type, Priority, etc. on fax).
- should convert the content itself into the appropriate format used by the external server (e.g. WAV(G.723) attachment to AMR attachment for voice mail system).

D.2 Receiving of messages

On receiving a message from an external server the MMS Relay/Server should be able to handle the following on MM3:

- The external server may send a message with RFC 2822 formatted header and a body with encapsulated message type of the external server (e.g. e-mail with attachment application/sms). In that case the MMS Relay/Server should map as many fields of the RFC 2822 header to the corresponding header fields of an MM. Additionally the MMS Relay/Server may be able to copy MMS relevant information from the MIME encapsulated body and map them to the corresponding header fields and body of an MM. The attachment itself should be forwarded unaltered as attachment of the generated MM to the recipient.
- The MMS Relay/Server should be able to interpret MMS specific fields in the RFC 2822 header of a message from an external server (e.g. voice mail can specify expiry date).
- The external server may send a message with regular RFC 2822 formatted header and MIME encapsulated attachments which may comprise content and/or profile information (e.g. VPIM multipart/voice-message). The MMS Relay/Server should be able to map as many fields of the RFC 2822 header to the corresponding header fields of an MM. Additionally in the case the attachments contain some message profile information the MMS Relay/Server should be able to map those to the corresponding header fields of an MM. The attachments/parts of the attachments with message content may be converted to another media type or format subject to the capabilities of the MMS User Agent. In most cases the attachments might be forwarded unaltered to the recipient.
- The external server may send a message with a format different from RFC 2822. In this case the MMS Relay/Server should be able to extract as many information from the external message format and protocol and map them to corresponding fields of the MM header. The content of the message from the external server should be mapped to an appropriate MIME type/subtype and attached to the MM. (e.g. SMS via 3GPP TR 23.039 -> MM with text/plain).

Annex D1 (informative): Mapping of IE to MM3 protocols

This annex maps the information elements found on MM1 and MM4 to the relevant fields to transfer over MM3 to Internet Email (based on ESMTP and MIME) or voicemail systems (based on VPIMv2).

D1.1 Transforming MM

The tables below are provided to give an end-to-end description of the interface between MMS and external messaging services. The first table indicates how to transform a MM, that originates from either MM1_submit.REQ or from MM4_forward.REQ, to a corresponding Internet Email message to be transferred to an email address. The second table indicates how to transform a MM, that originates from either MM1_submit.REQ or from MM4_forward.REQ, to a corresponding VPIM message to be transferred to a voicemail server. In each table the MMS information elements appear in the left column, the middle column indicates the corresponding standard header field, the right column gives special explanations for the transformation.

As indicated in Annex D – many of the MMS Information Elements should not be transferred to external messaging systems and should be suppressed. This will be indicated in the tables by the word “suppressed”

Table D1.1 Mapping of Submitted MM to Internet Email

MMS Information Element	Internet Email Header	Notes
Message Type	*suppressed*	
MMS Version	*suppressed*	
Transaction ID	*suppressed*	
Recipient address	**SMTP -** RCPT TO **MIME -** To:, Cc:	Bcc recipients should only appear in the SMTP RCPT TO part of the transfer and not part of the MIME content.
Content type	**MIME -** Content-Type:	
Sender address	**SMTP -** MAIL FROM **MIME -** From:	(NOTE 1)
Message class	*suppressed*	If Message class is “auto” this should affect the MAIL FROM field (NOTE 1).
Date and time	**MIME -** Date:	
Time of Expiry	**SMTP –** DELIVER-BY parameter of RCPT TO	As defined in RFC 2852
Earliest Delivery Time	*suppressed*	There is currently an IETF draft that suggests use of the SMTP AFTER parameter
Delivery report	**SMTP –** DSN	As defined in RFC 3461, dependent on ENVID, see below.
Reply-Charging	*suppressed*	
Reply-Deadline	*suppressed*	
Reply-Charging-Size	*suppressed*	
Priority	**MIME -** X-Priority:	
Sender visibility	*suppressed*	
Store	*suppressed*	
MM State	*suppressed*	
MM Flags	*suppressed*	
Read reply	**MIME –** Disposition-Notification-To:	As defined in RFC 2298
Subject	**MIME -** Subject:	
Reply-Charging-ID	*suppressed*	
Content	*<message body>*	
Message ID	**SMTP –** ENVID **MIME –** Message-ID:	As defined in RFC 3461, used to return DSN, this Message ID should be generated by the MMS Relay for MM that come from MM1_submit.REQ and should use the X-Mms-Message-ID from the MM4_forward.REQ

Table D1.2 Mapping of Submitted MM to Voicemail via VPIM

MMS Information Element	Internet VPIM Header	Notes
Message Type	*suppressed*	
MMS Version	*suppressed*	
Transaction ID	*suppressed*	
Recipient address	**SMTP -** RCPT TO **MIME -** To:, Cc:	Bcc recipients should only appear in the SMTP RCPT TO part of the transfer and not part of the MIME content.
Content type	**MIME -** Content-Type:	(NOTE 2)
Sender address	**SMTP -** MAIL FROM **MIME -** From:	(NOTE 1)
Message class	*suppressed*	If Message class is “auto” this should affect the MAIL FROM field (NOTE 1).
Date and time	**MIME -** Date:	
Time of Expiry	**SMTP –** DELIVER-BY parameter of RCPT TO	As defined in RFC 2852
Earliest Delivery Time	*suppressed*	There is currently an IETF draft that suggests use of the SMTP AFTER parameter
Delivery report	**SMTP –** DSN	As defined in RFC 3461, dependent on ENVID, see below.
Reply-Charging	*suppressed*	
Reply-Deadline	*suppressed*	
Reply-Charging-Size	*suppressed*	
Priority	**MIME -** Importance:	
Sender visibility	*suppressed*	
Store	*suppressed*	
MM State	*suppressed*	
MM Flags	*suppressed*	
Read reply	**MIME –** Disposition-Notification-To:	As defined in RFC 2298
Subject	**MIME -** Subject:	
Reply-Charging-ID	*suppressed*	
Content	*<message body>*	(NOTE 3)
Message ID	**SMTP –** ENVID **MIME –** Message-ID:	As defined in RFC 3461, used to return DSN, this Message ID should be generated by the MMS Relay for MM that come from MM1_submit.REQ and should use the X-Mms-Message-ID from the MM4_forward.REQ
	MIME – MIME Version: 1.0 (Voice 2.0)	This field should be added to all MM transferred to VPIM

NOTE 1:	When Address Hiding was requested then the MIME From: field shall not contain the originator's address, but some string, e.g. "Anonymous", that indicates that the address is being suppressed. If the Message-class of the MM is "auto", i.e. this MM was automatically generated by the MMS Relay then the SMTP MAIL FROM field should be set to null ("<>") to prevent attempts to respond to the message.
NOTE 2:	RFC 2421 (VPIMv2) requires that the content of the voice message be packaged in a "multipart/voice-message" content-type that may contain the actual message within a "audio/*" part of the multipart.
NOTE 3:	The actual content must be filtered to transfer only a voice part of the message with possibly a vCard or voice signature. In addition, the content should be encoded in binary if supported by the SMTP servers and if not shall be encoded in Base64 encoding. The transfer encoding must be indicated for each part of the multipart using the Content-Transfer-Encoding: header field.

When receiving a message from an external messaging service, the MMS Relay/Server should use the available information in the transport and message headers to generate appropriate MMS information elements. The following tables indicate what header information should be used when receiving messages from either Internet Email or Voicemail via VPIM.

Table D1.3 Mapping of Internet Email / Voicemail via VPIM to MM notification / retrieved MM

MM1 Notification or Retrieve Information Element	Internet Email/VPIM Header	Notes
Message Type		Created by MMS Relay/Server
MMS Version		Created by MMS Relay/Server
Transaction ID		Created by MMS Relay/Server
Recipient address	**MIME -** To:, Cc:	
Content type	**MIME -** Content-Type:	
Sender address	**MIME -** From:	
Message class		Should be set to “personal”
Date and time	**MIME -** Date:	
Time of Expiry	**SMTP –** DELIVER-BY parameter of RCPT TO	Note that the DELIVER-BY is always a relative time
Delivery report	**SMTP –** DSN	
Reply-Charging fields		These will not appear – as they are Optional and are not supported in originating messaging system.
Priority	**MIME -** Importance: or X-Priority:	
Read reply	**MIME –** Disposition-Notification-To:	As defined in RFC 2298
Subject	**MIME -** Subject:	
Content	*<message body>*	
Message ID	**SMTP –** ENVID **MIME –** Message-ID:	As defined in RFC 3461, used to return DSN, this Message ID should be generated by the MMS Relay for MM that come from MM1_submit.REQ and should use the X-Mms-Message-ID from the MM4_forward.REQ
Stored MM State MM Flags Request Status Request Status Text		All of these fields are dependent on MMS Relay/Server settings

D1.2 Delivery Reports

The MMS Relay/Server should be prepared to receive delivery reports from external messaging services that such reports were requested from. In addition the MMS Relay/Server should support generation of Delivery Status Notification messages (as specified in RFC3461) when requested from external messaging services. The following table indicates the transformation of a received Delivery Report as defined in RFC 3461 and RFC 1892 to the corresponding MM1-deliveryReport.req PDU.

Note that the DSN as defined in the relevant RFC consists of three content parts in addition to the set of MIME headers. Each of the three parts may contain information necessary for the transformation from DSN to MM1-deliveryReport.

Table D1.4 Mapping of Delivery Status Notification to MMS Delivery Report

MM1 DeliveryReport Information Element	RFC3461 DSN report message	Notes
Message Type	DSN top-level : multipart/report, report-type=delivery-status second-part : message/delivery-status	Created by MMS Relay/Server
MMS Version		Created by MMS Relay/Server
Transaction ID		Created by MMS Relay/Server
Message-ID	Original-Envelope-ID field of per-message fields	This is an optional field in the DSN but "should" appear if ENVID was supplied as specified in tables above.
Recipient address	Final-Recipient field	This is a mandatory field in the DSN per-message section of the second-part
Sender address	top-level: To: header field value	In addition, this may be available from the SMTP RCPT TO: field.
Date and Time	top-level: Date: header field value	
MM Status	Action and Status fields of the per-message section of second-part	The DSN Action field may have one of the following values: ▪ delivered (should correspond to the *retrieved*). ▪ failed (may correspond to the expired status – depending on the Status field value. ▪ delayed (should not be transferred to user) ▪ relayed (should correspond to the *indeterminate* status of MMS) ▪ expanded (should not be transferred to user)
MM Status Text	Text from first part of DSN content	
NOTE: When the DSN Action field indicates that the action taken by the external messaging service was either "delayed" or "expanded" then the MMS Relay/Server should not forward a delivery-report to the MM originator.		

When an external messaging service requests, via DSN request in SMTP envelope, a delivery report the MMS Relay/Server should generate a DSN with the following information:

- MIME message of content-type: multipart/report with parameter "report-type=delivery-status";
- MIME field To: should be originator of the message that is being delivered according to the address format that appeared in the From; field as it was received at the MMS Relay/Server;
- MIME field From: should be the address of the recipient that the delivery-report is relating to;
- The content of the DSN should be a two-part multipart/report in which the first part is a plain/text part that includes the MM Status Text field that would have been generated for a MM1 delivery-report;
- The second-part of the content should be a message/delivery-status content that should include the following information:

- Original-Envelope-ID field with the Message-ID that appeared in the ENVID field of the SMTP envelope that was conveyed to the MMS Relay/Server by the external service;
- Final-Recipient field whose value should be the MMS address of the recipien;
- Action field should indicate if the message was delivered;
- For failed delivery an appropriate Status value should be included.

Annex E (informative): Use cases for Reply-Charging

The following detailed example use case of reply-charging describes the case when MMS User Agent A and MMS User Agent B belong to the same MMSE. MMS User Agent A is the sender of the reply-charged MM and MMS User Agent B is the recipient of the reply-charged MM.

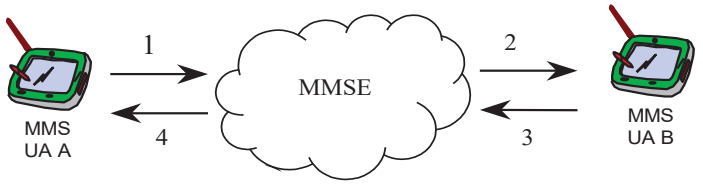

Figure E.1: Message flow in case of reply-charging

1. User A produces an MM and marks it "reply-charged" before it is submitted to the MMS Relay/Server. The MMS Relay/Server notes that user A is willing to pay for a reply-MM to this particular MM and notes the message identification of the original MM and the originator's limitations.

2. The MM is retrieved by user B in accordance to the user profile of user B. This might imply charges for user B when retrieving the MM. User B retrieves the original MM and discovers that the first reply to this message (that is accepted by the Service Provider) will be paid by user A.

3. User B creates an answer, the MMS User Agent B marks it as a reply-MM and submits it on to the MMS Relay/Server. The MMS Relay/Server identifies this MM as a reply to the original MM and checks the originator's limitations. If the MMS Relay/Server accepts the reply the reference set before (as described in transaction 1) is deleted. User A is billed for transaction 3.

4. User A retrieves the reply-MM and eventually is billed for transaction 4.

The other use case of reply-charging where MMS User Agent A and MMS User Agent B belong to different MMS Service Providers is for future elaboration.

The use case of reply-charging where the originator MMS User Agent is actually the MMS VAS Application (using MM7 reference point) behaves in the same way as the use case of two MMS User Agents in the same MMSE.

Annex F (normative): Configuration of MMS-capable UEs

An MMS-capable UE may be configured with information about MMS connectivity and user preferences. A configured MMS-capable UE requires minimum user interaction for different MMS-specific purposes, e.g. accessing network infrastructure, composing mobile-originated MMs. MMS connectivity information and user preferences are described below.

F.1 MMS Connectivity Information

MMS connectivity information consists of a set of information elements needed to access network infrastructure for the MMS purpose. This includes bearer, protocols, and addresses of related access points. Two possible ways to provision an MMS-capable UE with MMS connectivity information, which are not mutually exclusive, are:

- via the (U)SIM, cf. clause 7.1.14, and
- via over the air provisioning according to [55].

A list of information elements concerning MMS connectivity information is outlined below. Some of the connectivity information elements can also be used for purposes other than MMS. An MMS-capable UE can be configured with all or a subset of the listed elements depending on the provided service in terms of e.g. bearer, security, implementation protocol. Moreover, an MMS-capable UE can be configured with more than one sets of connectivity information for multiple access mechanisms, e.g. bearer, access type. Further information about the listed information elements for WAP/OMA MMS implementation (cf. Annex B) can be found in [55] and [56].

MMS Relay/Server

- address: the address of the associated MMS Relay/Server as defined in [56]

WAP Gateway for WAP/OMA implementation of MMS (the terminology of the information elements as defined in chapter 5.6 in [55] is given in parenthesis)

- address: the address of the associated WAP Gateway. The address can be of different types, as indicated by the "type of address" (PXADDR)
- type of address: indicates the type (e.g. IPv4, IPv6) of the "address" of the WAP Gateway (PXADDRTYPE)
- port: indicates the port number specific to the address of the WAP Gateway (PORTNBR)
- service: specifies available service, e.g. connection-less, secured (SERVICE)
- authentication type: indicates the authentication method used by the WAP Gateway (PXAUTH-TYPE)
- authentication id: indicates the authentication identifier used for authentication by the WAP Gateway (PXAUTH-ID)
- authentication pw: indicates the authentication secret used for authentication by the WAP Gateway (PXAUTH-PW)

Interface to core network including access point for the core network (e.g. GGSN) and required bearer (the terminology of the information elements as defined in chapter 5.6 in [55] is given in parenthesis)

- bearer: indicates the type of network (e.g. CSD, GPRS) (BEARER)
- address: the address of the associated access point. The address could be of different types depending on the bearer, as indicated by the "type of address" (NAP-ADDRESS)
- type of address: indicates the type (e.g. MSISDN for CSD, APN for GPRS) of the "address" of the access point (NAP-ADDRTYPE)
- speed: indicates the speed of the connection for circuit switched bearers (LINKSPEED)

- call type: indicates type of call for specific bearer (e.g. analogue for CSD) (CALLTYPE)
- authentication type: indicates the authentication protocol used by the access point (AUTHTYPE)
- authentication id: indicates the authentication id used for authentication by the access point (AUTHNAME)
- authentication pw: indicates the authentication secret used for authentication by the access point (AUTHSECRET)

For the storage of WAP Gateway Information and Interface to Core Network and Bearer Information on the (U)SIM only the binary encoding of information elements as defined in chapter 8 of [55] shall be taken into account, i.e. for each information element ("attribute name" according to [55]) and for each predefined attribute value according to [55] the equivalent tokens shall be used. Non-predefined attribute values shall be represented by ASCII string encoding with NULL character termination in order to indicate the end of the attribute value. The "connectivity document" structure as defined in previous chapters of [55] shall not be used for the storage of WAP Gateway Information and Interface to Core Network and Bearer Information on the (U)SIM.

F.2 User Preferences

User preferences consist of a set of information elements with user-defined values. The set is a subset of information elements required for composing an MM. User preferences include following information elements.

For the WAP/OMA implementation of MMS (cf. Annex B) the corresponding header field names and their equivalent binary tokens as defined in [56] are given in parenthesis. For the storage of MMS User Preferences on the (U)SIM only these binary tokens shall be taken into account. The header field encoding according to [23] shall not be used for that purpose.

- Delivery report (Delivery-Report, encoded as 0x06)
- Read reply (Read-Reply, encoded as 0x10)
- Sender visibility (Sender-Visibility, encoded as 0x14)
- Priority (Priority, encoded as 0x0F)
- Time of expiry (Expiry, encoded as 0x08)
- Earliest delivery time (Delivery-Time, encoded as 0x07)

Further information about the information elements, listed here, can be found in section 8.1.3 (Submission of Multimedia Message) of this specification.

Annex G (normative): DNS-ENUM recipient MSISDN address resolution.

For those recipients MSISDN addresses that appear in an MM and belong to an external MMSE, the originator MMS Relay/Server shall translate (resolve) them to a routable RFC 2822 [5] address that shall be used in the “RCPT TO” SMTP subsequent commands.

DNS-ENUM recipient MSISDN address resolution procedure:

1. The originator MMS Relay/Server shall ensure that the recipient address (MSISDN) complies with the E.164 address format and includes the ‘+’ character. In the case of national or local addressing scheme (e.g. only operator code followed by a number), the MMS Relay/Server shall convert the national or local number to an E.164 address format.

   EXAMPLE 1: +30-697-123-4567

   EXAMPLE 2: In case of number conversion 6971234567 is converted to +306971234567

2. The originator MMS Relay/Server shall remove all non-digit characters with the exception of the leading '+'.

   EXAMPLE: +306971234567

3. The originator MMS Relay/Server shall remove all characters with the exception of digits.

   EXAMPLE: 306971234567

4. The originator MMS Relay/Server shall put dots (".") between each digit.

   EXAMPLE: 3.0.6.9.7.1.2.3.4.5.6.7

5. The originator MMS Relay/Server shall reverse the order of the digits.

   EXAMPLE: 7.6.5.4.3.2.1.7.9.6.0.3

6. The resulting subdomain (result of step 5) shall be converted to a FQDN by appending an appropriate string. The specific string depends on the administrative control of the ENUM implementation.

   EXAMPLES: 7.6.5.4.3.2.1.7.9.6.0.3.e164.arpa (public top level domain), 7.6.5.4.3.2.1.7.9.6.0.3.e164.gsm (private top level domain), 7.6.5.4.3.2.1.7.9.6.0.3.e164.gprs (private top level domain), etc.

7. The resulting FQDN together with the string (E.164 number) in the form as specified in step 2 above, shall be used as the input to the NAPTR algorithm [60] by the originator MMS Relay/Server.

8. The output may result in one of the following cases:

   a. E.164 number not in the numbering plan. The originating MMS Relay/Server shall invoke an appropriate address resolution exception handling procedure (e.g. send a message to the originating MMS User Agent reporting the error condition).

   b. E.164 number in the numbering plan, but no URIs exist for that number. The originating MMS Relay/Server shall invoke an appropriate address resolution exception handling procedure (e.g. send a message to the originating MMS User Agent reporting the error condition, perform the necessary conversion and route forward the message to the recipient via MM3, etc.).

   c. E.164 number in the numbering plan, but no MMS URIs (MMS URIs are of the form “mms:mailbox” and they are defined in the MMS Resource Record section) exist for that number. The originating MMS Relay/Server shall invoke an appropriate address resolution exception handling procedure (e.g. send a message to the originating MMS User Agent reporting the error condition, perform the necessary conversion and route forward the message to the recipient via MM3 using the appropriate URI based on the Service field, etc.).

d. DNS ENUM service unavailable. The originating MMS Relay/Server shall invoke an appropriate address resolution exception handling procedure (e.g. send a message to the originating MMS User Agent reporting the error condition, store the message in the queue and retry at a later time, etc.).

e. E.164 number in the numbering plan and MMS URIs exist for that number.

EXAMPLE: The following is an example of NAPTR Resource Records associated with the FQDN derived from the recipient MSISDN address (+306971234567)

IN NAPTR 100 10 "u" "sip+E2U" "!^.*$!sip:Mary.Smith@sip.cosmote.gr!" .

IN NAPTR 100 11 "u" "mms+E2U" "!^.*$!mms:+306971234567/TYPE=PLMN@mms.cosmote.gr!" .

IN NAPTR 101 10 "u" "mailto+E2U" "!^.*$!mailto:Mary.Smith@mycosmos.gr!" .

IN NAPTR 102 10 "u" "mailto+E2U" "!^.*$!mailto:MaryS@otenet.gr!" .

The +306971234567 is converted to the following URIs:

sip:Mary.Smith@sip.cosmote.gr

mms:+306971234567/TYPE=PLMN@mms.cosmote.gr

mailto:Mary.Smith@mycosmos.gr

mailto:MaryS@otenet.gr

9. In case that the ENUM-DNS returns more than one MMS URI, the originator MMS Relay/Server shall sort the MMS URIs according to the Order and Preference fields as it is described in [60] and [61].

10. The originator MMS Relay/Server shall resolve the domain part of the “mailbox” of the highest precedence MMS URI to an IP address using standard DNS according to [22] section 5 “Address Resolution and Mail Handling”. Specifically, MX records shall be checked for and, if present, shall be used..

    EXAMPLE: The highest precedence MMS URI is mms:+306971234567/TYPE=PLMN@mms.cosmote.gr

    The domain part of the “mailbox” is mms.cosmote.gr and is resolved (e.g. DNS) to 10.10.0.1

11. The resulting IP address together with the recipient RFC 2822 address (“mailbox”) shall be used by the originator MMS Relay/Server for routing forward the MM using the protocol described in clause 6.8 to the recipient MMS Relay/Server.

MMS Resource Record (RR)

The key fields in the NAPTR RR are the Domain, TTL, Class, Type, Order, Preference, Flags, Service, Regexp and Replacement and they are described in [60] and [61]. In particular, for this release the following fields are further specified as follows:

Service = "mms+E2U"

Regexp = "!^.*$!mms:mailbox!" where “mailbox” token and its associated formatting rules are specified in [5].

The MMS URI is of the form “mms:mailbox”

Annex H (normative): Recipient MSISDN address resolution based on IMSI.

Only if recipient addressing resolution mechanism based on a MAP query is used, the procedures defined in this annex shall be followed.

For those recipients MSISDN addresses that appear in an MM and belong to an external MMSE, the originator MMS Relay/Server shall translate (resolve) them to a routable RFC 2822 [5] address that shall be used in the “RCPT TO” SMTP subsequent commands.

Recipient MSISDN address resolution procedure:

1. The originator MMS Relay/Server determines that the recipient MSISDN address belongs to an external MMSE.

2. The originator MMS Relay/Server shall interrogate the recipient HLR for the associated IMSI by invoking the standard GSM-MAP operation SRI_for_SM as described in [62] and [64]. This operation should be invoked with the SM-RP-PRI parameter set to 'true'. As an optional feature, to complement the mandatory SRI_for_SM operation, the Relay/Server may also support the Send_IMSI MAP operation as described in [62] and [64].

3. Incase of a successful interrogation the originator MMS Relay/Server shall determine the MCC and MNC and look up for a matching entry in an IMSI table. The IMSI table shall maintain the associations of MCC + MNC → MMSE FQDN. Subsequently the originator MMS Relay/Server shall be able to resolve (e.g. using standard DNS) the MMSE FQDN to an IP address for establishing the SMTP (MM4) session.

4. If the recipient MSISDN is not known to belong to any MMSE (No entry in the IMSI table, GSM-MAP error, etc.), the MMS Relay/Server shall invoke an appropriate address resolution exception handling procedure. These procedures are not standardized.

NOTE: Although the mandatory GSM-MAP operation SRI_for_SM is a standardized operation, in some cases HLR is unable to return the correct recipient’s IMSI number (GSM MAP error received) due to e.g. recipient’s settings or recipient network’s settings. In that case MMS Relay/Server shall invoke an appropriate exception handling procedure. These procedures are not standardized.

The above procedure complies with the Mobile Number Portability (MNP) requirements and technical realization as they are specified in [63] and [64] respectively. In addition, this procedure complies with the Non-call related signalling MNP procedures for direct and indirect routeing as it is described in [64], Annex B.

Figure H.1 provides an example message flow diagram:

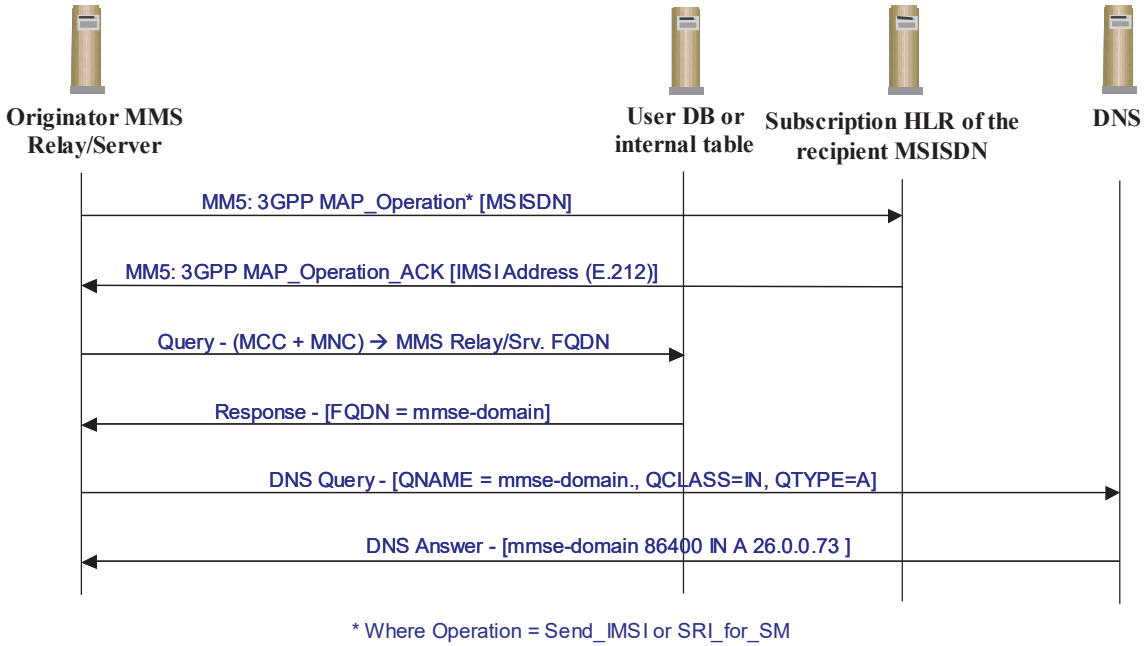

Figure H.1: Message flow of the recipient MSISDN address resolution based on IMSI.

Annex I (normative): MM1 <-> MM4 header mapping

This annex maps the information elements found on MM1 onto the STD 11 [5] header fields of MM4.

The tables below are provided to give a normative end-to-end description of MMS. It provides mapping of MM1 with respect to MM4/STD11.

In many cases there is no mapping between MM1 information elements and MM4 STD 11 header fields, this is according to specifications. These information elements are included in the tables below in order to give a complete picture of how the MM1 information elements are handled.

Table I.1: Mapping MM1_submit.REQ -> MM4_forward.REQ

Information elements in MM1_submit.REQ	STD11 Header fields in Egress MM4_forward.REQ
Message Type	-
MMS Version	-
Transaction ID	-
Recipient address	To:, Cc:, Bcc: (NOTE 1, NOTE 2)
Content type	Content-Type:
Sender address	From:
Message class	X-Mms-Message-Class:
Date and time	Date:
Time of Expiry	X-Mms-Expiry:
Earliest Delivery Time	-
Delivery report	X-Mms-Delivery-Report:
-	X-Mms-Originator-R/S-Delivery-Report
Reply-Charging	-
Reply-Deadline	-
Reply-Charging-Size	-
Priority	X-Mms-Priority:
Sender visibility	X-Mms-Sender-Visibility:
Store	-
MM State	-
MM Flags	-
Read reply	X-Mms-Read-Reply:
Subject	Subject:
Applic-ID	X-Mms-Applic-ID
Reply-Applic-ID	X-Mms-Reply-Applic-ID
Aux-Applic-Info	X-Mms-Aux-Applic-Info
Reply-Charging-ID	-
Content Class	X-Mms-Content-Class:
DRM Content	X-Mms-Drm-Content:
Adaptations	X-Mms-Adaptation-Allowed:
Content	*<message body>*
-	X-Mms-3GPP-MMS-Version
-	X-Mms-Message-Type
-	X-Mms-Transaction-Id
-	X-Mms-Message-Id
-	X-Mms-Acq-Request
-	X-Mms-Forward-Counter
-	X-Mms-Previously-sent-by
-	X-Mms-Previously-sent-date-and-time

NOTE 1: A "Bcc:" field is created on MM4 only when the original MM on MM1 contains only blind-carbon-copy recipient(s). In this case the "Bcc:" field is left blank, see clause 8.4.4.2.

NOTE 2: Recipient addresses for blind-carbon-copy recipient(s) on MM1 are mapped onto <RCPT TO:> commands on SMTP level on MM4.

Table I.2: Mapping MM1_submit.RES -> MM4_forward.REQ

Information elements in MM1_submit.RES	STD11 Header fields in Egress MM4_forward.REQ
Message Type	-
MMS Version	-
Transaction ID	-
Request Status	-
Request Status Text	-
Message ID	X-Mms-Message-ID:
Store Status	-
Store Status Text	-
Stored Message Reference	-
-	X-Mms-Applic-ID
-	X-Mms-Reply-Applic-ID
-	X-Mms-Aux-Applic-Info
-	To:, Cc:, Bcc: (NOTE 1, NOTE 2)
-	Content-Type:
-	From:
-	X-Mms-Message-Class:
-	Date:
-	X-Mms-Expiry:
-	X-Mms-Delivery-Report:
-	X-Mms-Originator-R/S-Delivery-Report
-	X-Mms-Priority:
-	X-Mms-Sender-Visibility:
-	X-Mms-Read-Reply:
-	Subject:
-	X-Mms-3GPP-MMS-Version
-	X-Mms-Message-Type
-	X-Mms-Transaction-Id
-	X-Mms-Acq-Request
-	X-Mms-Forward-Counter
-	X-Mms-Previously-sent-by
-	X-Mms-Previously-sent-date-and-time

NOTE 1: A "Bcc:" field is created on MM4 only when the original MM on MM1 contains only blind-carbon-copy recipient(s). In this case the "Bcc:" field is left blank, see clause 8.4.4.2.

NOTE 2: Recipient addresses for blind-carbon-copy recipient(s) on MM1 are mapped onto <RCPT TO:> commands on SMTP level on MM4.

Table I.3: Mapping MM1_notification.REQ <- MM4_forward.REQ

Information elements in MM1_notification.REQ	STD11 Header fields in Ingress MM4_forward.REQ
Message Type	-
MMS Version	-
Transaction ID	-
Message class	X-Mms-Message-Class:
Message size	-
Time of expiry	X-Mms-Expiry:
Message Reference	-
Subject	Subject:
Applic-ID	X-Mms-Applic-ID
Reply-Applic-ID	X-Mms-Reply-Applic-ID
Aux-Applic-Info	X-Mms-Aux-Applic-Info
Priority	X-Mms-Priority:
Sender address	From:
Stored	-
Delivery report	X-Mms-Delivery-Report:
-	X-Mms-Originator-R/S-Delivery-Report
Reply-Charging	-
Reply-Deadline	-
Reply-Charging-Size	-
Reply-Charging-ID	-
Element-Descriptor	-
Message Distribution Indicator	-
-	To:, Cc:, Bcc: (NOTE 1, NOTE 2)
-	Content-Type:
-	Date:
-	X-Mms-Sender-Visibility:
-	X-Mms-Read-Reply:
-	X-Mms-3GPP-MMS-Version
-	X-Mms-Message-Type
-	X-Mms-Transaction-Id
-	X-Mms-Acq-Request
-	X-Mms-Forward-Counter
-	X-Mms-Previously-sent-by
-	X-Mms-Previously-sent-date-and-time
Content Class	X-Mms-Content-Class:
DRM Content	X-Mms-Drm-Content:
NOTE 1: A "Bcc:" field is created on MM4 only when the original MM on MM1 contains only blind-carbon-copy recipient(s). In this case the "Bcc:" field is left blank, see clause 8.4.4.2. NOTE 2: Recipient addresses for blind-carbon-copy recipient(s) on MM1 are mapped onto <RCPT TO:> commands on SMTP level on MM4.	

Table I.4: Information elements in the MM1_notification.RES.

Information elements in MM1_notification.RES	MM4 STD 11 Header fields
Message Type	-
MMS Version	-
Transaction ID	-
MM Status	-
Report allowed	-

Table I.5: Information elements in the MM1_retrieve.REQ

Information elements in MM1_retrieve.REQ	MM4 STD 11 Header fields
Message Reference	-

Table I.6: Mapping MM1_retrieve.RES <- MM4_forward.REQ

Information elements in MM1_retrieve.RES	STD11 Header fields in Ingress MM4_Forward.REQ
Message Type	-
MMS Version	-
Transaction ID	-
Message ID	X-Mms-Message-ID:
Sender address	From:
Content type	Content-type:
Recipient address	To:
Message class	X-Mms-Message-Class:
Date and time	Date:
Delivery report	X-Mms-Delivery-Report:
-	X-Mms-Originator-R/S-Delivery-Report
Priority	X-Mms-Priority:
Read reply	X-Mms-Read-Reply:
Subject	Subject:
Applic-ID	X-Mms-Applic-ID
Reply-Applic-ID	X-Mms-Reply-Applic-ID
Aux-Applic-Info	X-Mms-Aux-Applic-Info
Request Status	-
MM State	-
MM Flags	-
Request Status Text	-
Reply-Charging	-
Reply-Charging-ID	-
Reply-Deadline	-
Reply-Charging-Size	-
Previously-Sent-By	X-Mms-Previously-Sent-By
Previously-Sent-Date	X-Mms-Previously-Sent-Date
Content	*<message body>*
Message Distribution Indicator	-
-	X-Mms-3GPP-MMS-Version
-	X-Mms-Message-Type
-	X-Mms-Transaction-Id
-	X-Mms-Expiry
-	X-Mms-Sender-Visibility:
-	X-Mms-Read-Reply:
-	X-Mms-Acq-Request
-	X-Mms-Forward-Counter
Content Class	X-Mms-Content-Class:
DRM Content	X-Mms-Drm-Content:

Table I.7: Information elements in the MM1_acknowledgement.REQ

Information elements in MM1_acknowledgement.REQ	MM4 STD 11 Header fields
Message Type	-
MMS Version	-
Transaction ID	-
Report allowed	-

Table I.8: Mapping MM1_forward.REQ -> MM4_forward.REQ

Information elements in MM1_forward.REQ	STD11 Header fields in Egress MM4_Forward.REQ
Message Type	-
MMS Version	-
Transaction ID	-
Recipient address	To:, Cc:, Bcc: (NOTE 1, NOTE 2)
Forwarding address	From:
Date and time	Date:
Time of Expiry	X-Mms-Expiry:
Earliest delivery time	-
Store	-
MM State	-
MM Flags	-
Delivery report	X-Mms-Delivery-Report:
-	X-Mms-Originator-R/S-Delivery-Report
Read reply	X-Mms-Read-Reply:
Reply-Charging	-
Reply-Deadline	-
Reply-Charging-Size	-
Message Reference	-
-	X-Mms-3GPP-MMS-Version
-	X-Mms-Message-Type
-	X-Mms-Transaction-Id
-	X-Mms-Message-ID:
-	Content-Type:
-	X-Mms-Message-Class:
-	X-Mms-Priority:
-	X-Mms-Sender-Visibility:
-	Subject:
-	X-Mms-Acq-Request
-	X-Mms-Forward-Counter
-	X-Mms-Previously-Sent-By
-	X-Mms-Previously-Sent-Date
-	Content
-	X-Mms-Applic-ID
-	X-Mms-Reply-Applic-ID
-	X-Mms-Aux-Applic-Info
NOTE 1: A "Bcc:" field is created on MM4 only when the original MM on MM1 contains only blind-carbon-copy recipient(s). In this case the "Bcc:" field is left blank, see clause 8.4.4.2. NOTE 2: Recipient addresses for blind-carbon-copy recipient(s) on MM1 are mapped onto <RCPT TO:> commands on SMTP level on MM4.	

Table I.9: Information elements in the MM1_forward.RES.

Information elements in MM1_forward.RES	MM4 STD 11 Header fields
Message Type	-
MMS Version	-
Transaction ID	-
Request Status	-
Request Status Text	-
Message ID	-
Store Status	-
Store Status Text	-
Stored Message Reference	-

Table I.10: Mapping MM1_delivery_report.REQ <- MM4_delivery_report.REQ

Information elements in MM1_delivery_report.REQ	STD11 Header fields in Ingress MM4_delivery_report.REQ
Message Type	-
MMS Version	-
Message ID	X-Mms-Message-ID
Recipient address	From:
Date and Time	Date:
MM Status	X-Mms-MM-Status-Code
-	X-Mms-MM-Status-Extension
MM Status text	X-Mms-Status-text:
-	X-Mms-Forward-To-Originator-UA
Applic-ID	X-Mms-Applic-ID
Reply-Applic-ID	X-Mms-Reply-Applic-ID
Aux-Applic-Info	X-Mms-Aux-Applic-Info

Table I.11: Mapping MM1_read_reply_recipient.REQ -> MM4_read_reply_report.REQ

Information elements in MM1_read_reply_recipient.REQ	STD11 Header fields in Egress MM4_read_reply_report.REQ
Message Type	-
MMS Version	-
Recipient address	From:
Originator address	To:
Message ID	X-Mms-Message-ID:
Date and Time	Date:
Read Status	X-Mms-Read-Status:
-	X-Mms-3GPP-MMS-Version
-	X-Mms-Message-Type
-	X-Mms-Transaction-Id
-	X-Mms-Acq-Request
Applic-ID	X-Mms-Applic-ID
Reply-Applic-ID	X-Mms-Reply-Applic-ID
Aux-Applic-Info	X-Mms-Aux-Applic-Info

Table I.12: Mapping MM1_ read_reply_originator.REQ <- MM4_ read_reply_report.REQ

Information elements in MM1_read_reply_originator.REQ	Ingress STD11 Header fields in MM4_read_reply_report.REQ
Message Type	-
MMS Version	-
Recipient address	From:
Originator address	To:
Message ID	X-Mms-Message-ID:
Date and Time	Date:
Read Status	X-Mms-Read-Status:
-	X-Mms-3GPP-MMS-Version
-	X-Mms-Message-Type
-	X-Mms-Transaction-Id
-	X-Mms-Acq-Request
Applic-ID	X-Mms-Applic-ID
Reply-Applic-ID	X-Mms-Reply-Applic-ID
Aux-Applic-Info	X-Mms-Aux-Applic-Info

Annex J (informative): Support for Streaming in MMS

Figure J.1 shows an example of the transaction flow for using streaming in MMS for retrieval of streamable MM elements. The MMS Relay/Server sends a modified MM as MM1_retrieve.RES in response to a retrieve request (MM1_retrieve.REQ). The rest of the transactions and the acronyms are as described in [40].

NOTE: The interface between MMS Relay/Server and Media Server is not specified in this release.

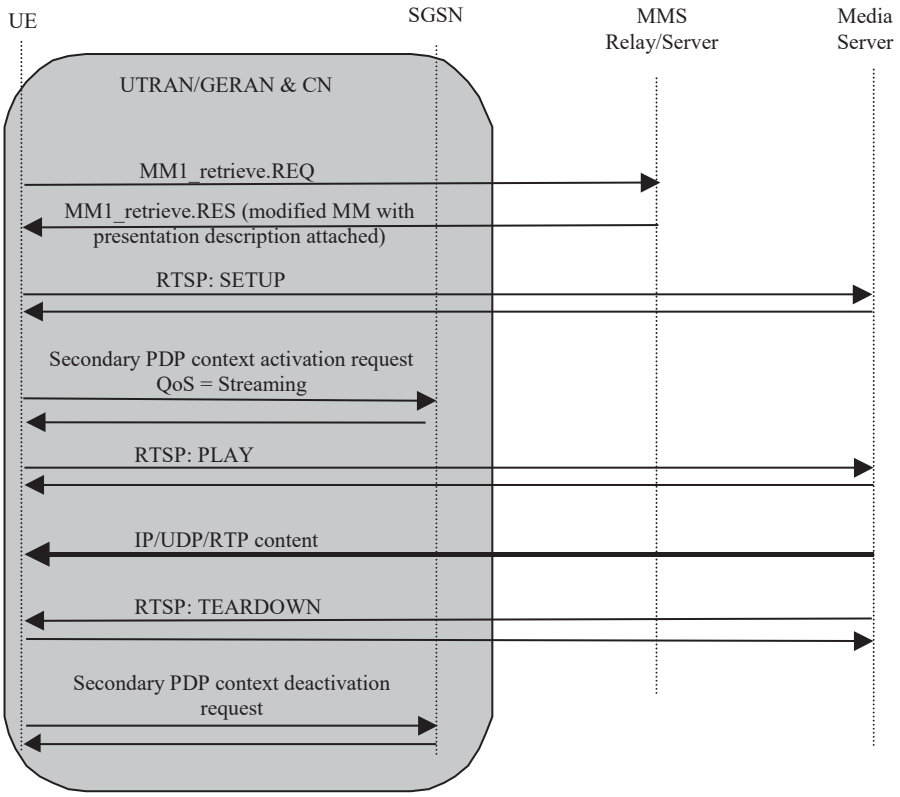

Figure J.1: Schematic view of the support for streaming in MMS

SDP is used as the format of the presentation description, as defined in [41]. MIME type for an SDP file is also according to [41]. The attribute line ('a=') with "control" type in the SDP header indicates the need to open an RTSP session. Use of RTSP to set-up and control a streaming session is according to [41].

Following is an example of a presentation description in SDP format. The example describes streaming of a video sequence.

```
v=0
o=ghost 2890844526 2890842807 IN IP4 192.168.10.10
s=MMS Example
i=Example of SDP file for streaming in MMS
u=http://www.infoserver.com/ae600
e=ghost@mailserver.com
c=IN IP4 0.0.0.0
b=AS:128
t=0 0
```

```
a=range:npt=0-45.678
m=video 1024 RTP/AVP 96
b=AS:128
a=rtpmap:96 H263-2000/90000
a=fmtp:96 profile=3;level=10
a=control:rtsp;//mediaserver.com/movie
a=recvonly
```

Annex K (informative): MM1, MM4 <-> MM7 header mapping

This annex maps the abstract messages from MM1 and MM4 to MM7.

The abstract messages mapped between MM1 and MM7 are:

- MM1_Submit.REQ to the MM7_Deliver.REQ
- MM7_Submit.REQ to the MM1_Notification.REQ and the MM1_Retrieve.RES
- MM1_Read_Reply_Recipient.REQ to the MM7_Read_Reply_Report.REQ
- MM1_Forward.REQ to the MM7_Deliver.REQ
- MM7_extended_cancel.REQ to the MM1_cancel.REQ
- MM7_extended_replace.REQ to the MM1_notification.REQ, and MM1_Retrieve.RES

The abstract messages mapped between MM4 and MM7 are:

- MM4_Forward.REQ to the MM7_Deliver.REQ
- MM4_Delivery_Report.REQ to the MM7_Delivery_Report.REQ
- MM4_Read_Reply_Report.REQ to the MM7_Read_Reply.REQ

The tables below show the mapping and are provided to give an end-to-end description of MMS. There is a table for each MM1, MM4 abstract message that maps to a MM7 abstract message. In many cases there is no mapping between MM1, MM4 and MM7 information elements, this is according to specifications. These information elements are included in the tables below in order to give a complete picture of how the information elements are handled.

There are also several abstract messages over MM1, MM4 that have no relevant mapping to MM7 and vice versa. These abstract messages are omitted from this annex.

Table K.1: Mapping MM1_submit.REQ -> MM7_deliver.REQ

Information elements in MM1_submit.REQ	Information elements in MM7_deliver.REQ
Message Type	-
Transaction ID	-
MMSVersion	-
Recipient address, -	Recipient address, - (NOTE 1)
Content type	Content type
Sender address	Sender address, - (NOTE 2)
Message class	-
Date and time	Date and time
Time of Expiry	-
Earliest delivery time	-
Delivery report	-
Reply-Charging	-
Reply-Deadline	-
Reply-Charging-Size	-
Priority	Priority
Sender visibility	-
Store	-
MM State	-
MM Flags	-
Read reply	-
Subject	Subject
Reply-Charging-ID	Reply-Charging-ID
Applic-ID	Applic-ID
Reply-Applic-ID	Reply-Applic-ID
Aux-Applic-Info	Aux-Applic-Info
Content Class	-
DRM Content	-
Adaptations	-
Content	Content
-	Transaction ID
-	Message type
-	MM7 version
-	MMS Relay/Server ID
-	Linked ID
-	Sender SPI
-	Recipient SPI

NOTE 1: The recipient address over MM1 may or may not be mapped to recipient address over MM7. The recipient address over MM7 may also be independent of the recipient address over MM1.

NOTE 2: If the Sender Visibility flag is set over MM1, the Sender address from MM1 is not mapped onto MM7.

Table K.2: Mapping MM7_submit.REQ -> MM1_notification.REQ, MM1_Retrieve.RES

Information elements in MM7_submit.REQ	Information elements in MM1_notification.REQ	Information elements in MM1_retrieve.RES
-	Message Type	-
-	Transaction ID	-
-	MMS Version	-
Message class	Message class	Message class
Time of Expiry	Time of expiry	-
Subject	Subject	Subject
Priority	Priority	Priority
Sender address	Sender address	Sender address
Reply-Charging	Reply-Charging	Reply-Charging
-	-	Reply-Charging-ID
Reply-Deadline	Reply-Deadline	Reply-Deadline
Reply-Charging-Size	Reply-Charging-Size	Reply-Charging-Size
Transaction ID	-	-
Message type	-	-
MM7 version	-	-
VASP ID	-	-
VAS ID	-	-
Recipient address	-	Recipient address
Service code	-	-
Linked ID	-	-
Date and time	-	Date and time
Earliest delivery time	-	-
Delivery report	-	-
Read reply	-	Read reply
Content Class	Content Class	Content Class
DRM Content	DRM Content	DRM Content
Adaptations	-	-
Content type	-	Content type
Content	-	Content
Message Distribution Indicator	Message Distribution Indicator	Message Distribution Indicator
Charged Party	-	-
Charged Party ID	-	-
DeliveryCondition	-	-
-	Message size	-
-	Message Reference	-
-	Stored	-
-	Delivery report	Delivery report
-	Reply-Charging-ID	-
-	Element-Descriptor	-
-	-	Message ID
-	-	MM State
-	-	MM Flags
-	-	Request Status
-	-	Request Status Text
-	-	Previously-sent-by
-	-	Previously-sent-date-and-time
-	-	Message Type
-	-	Transaction ID
-	-	MMS Version
Applic-ID	Applic-ID	Applic-ID
Reply-Applic-ID	Reply-Applic-ID	Reply-Applic-ID
Aux-Applic-Info	Aux-Applic-Info	Aux-Applic-Info

Table K.3: Mapping MM1_read_reply_recipient.REQ -> MM7_read_reply_report.REQ

Information elements in MM1_read_reply_recipient.REQ	Information elements in MM7_read_reply_report.REQ
Message Type	-
MMS Version	-
Recipient address	Recipient address
Originator address	Sender address
-	VASP ID
-	VAS ID
Message-ID	Message-ID
Date and Time	Date and Time
Read Status	Read Status
-	Transaction ID
-	Message Type
-	MM7 Version
-	MMS Relay/Server ID
-	Status text
Applic-ID	Applic-ID
Reply-Applic-ID	Reply-Applic-ID
Aux-Applic-Info	Aux-Applic-Info

Table K.4: Mapping MM1_Forward.REQ -> MM7_Deliver.REQ

Information elements in MM1_Forward.REQ	Information elements in MM7_Deliver.REQ
Message Type	-
Transaction ID	-
MMS Version	-
Recipient address	Recipient address
Forwarding address	Sender address
Date and time	Date and time
Time of Expiry	-
Earliest delivery time	-
Store	-
MM State	-
MM Flags	-
Delivery report	-
Read reply	-
Reply-Charging	-
Reply-Deadline	-
Reply-Charging-Size	-
Message Reference	<Content>, Content Type, Subject, Priority (NOTE)
-	Transaction ID
-	Message type
-	MM7 version
-	VASP ID
-	VAS ID
-	MMS Relay/Server ID
-	Linked ID
	Reply Charging ID
-	Sender SPI
-	Recipient SPI
-	Applic-ID
-	Reply-Applic-ID
-	Aux-Applic-Info
NOTE: The message reference is used to map fields and content from the original MM. The mapping of these fields is identical to the MM1_Submit.REQ/MM7_Deliver.REQ mapping in table K.1.	

Table K.5: Mapping MM4_Forward.REQ -> MM7_Deliver.REQ

Information elements in MM4_Forward.REQ	Information elements in MM7_Deliver.REQ
3GPP MMS Version	-
Message Type	-
Transaction ID	-
Message ID, -	Linked ID, - (NOTE 1)
Recipient(s) address	Recipient address
Sender address	Sender address (NOTE 2)
Content type	Content type
Message class	-
Date and time	Date and time
Time of Expiry	-
Delivery report	-
Priority	Priority
Sender visibility	-
Read reply	-
Subject	Subject
Acknowledgement Request	-
Forward counter	-
Previously-sent-by	Previously-sent-by
Previously-sent-date and-time	Previously-sent-date-and-time
Content Class	-
DRM Content	-
Adaptations	-
Content	Content
-	Transaction ID
-	Message type
-	MM7 version
-	VASP ID
-	VAS ID
-	MMS Relay/Server ID
-	Recipient address
-	Reply-Charging-ID
-	Sender SPI
-	Recipient SPI
Applic-ID	Applic-ID
Reply-Applic-ID	Reply-Applic-ID
Aux-Applic-Info	Aux-Applic-Info
NOTE 1: The Message ID over MM1 may or may not be mapped to the Linked ID over MM7. The Linked ID over MM7 may also be independent of the Message ID over MM1. NOTE 2: If the Sender Visibility flag is set over MM4, the Sender address from MM4 is not mapped onto MM7.	

Table K.6: void

Table K.7: MM4_delivery_report.REQ -> MM7_delivery_report.REQ

Information elements in MM4_delivery_report.REQ	Information elements in MM7_delivery_report.REQ
3GPP MMS Version	-
Message Type	-
Transaction ID	-
Message ID	Message ID
Recipient address	Sender address
-	VASP ID
-	VAS ID
Sender address	Recipient address
Date and time	Date and time
Acknowledgement Request	-
MM Status	MM Status
MM Status Extension	MM Status Extension
MM Status Text	Status text
-	Transaction ID
-	Message Type
-	MM7 Version
-	MMS Relay/Server ID
Applic-ID	Applic-ID
Reply-Applic-ID	Reply-Applic-ID
Aux-Applic-Info	Aux-Applic-Info

Table K.8: MM4_Read_reply_report.REQ -> MM7_read_reply_report.REQ

Information elements in MM4_Read_reply_report.REQ	Information elements in MM7_read_reply.REQ
3GPP MMS Version	-
Message Type	-
Transaction ID	-
Recipient address	Recipient address
Sender address	Sender address
-	VASP ID
-	VAS ID
Message-ID	Message-ID
Date and time	Date and time
Acknowledgement Request	-
Read Status	Read Status
Status text	Status text
-	Transaction ID
-	Message Type
-	MM7 Version
-	MMS Relay/Server ID
Applic-ID	Applic-ID
Reply-Applic-ID	Reply-Applic-ID
Aux-Applic-Info	Aux-Applic-Info

Table K.9: Mapping MM7_extended_replace.REQ -> MM1_notification.REQ, MM1_Retrieve.RES

Information elements in MM7_ extended_replace.REQ	Information elements in MM1_notification.REQ	Information elements in MM1_retrieve.RES
-	Message Type	-
-	Transaction ID	-
-	MMS Version	-
Transaction ID	-	-
Message type	-	-
MM7 version	-	-
VASP ID	-	-
VAS ID	-	-
Replace ID	Replace-ID	Replace-ID
Service code	-	-
Date and time	-	Date and time
Earliest delivery time	-	-
Delivery report	-Delivery report	-Delivery report
Read reply	-	Read reply
Adaptations	-	-
Content type	-	Content type
Content	-	Content
-	Message Distribution Indicator	Message Distribution Indicator
-	Applic-ID	Applic-ID
-	Reply-Applic-ID	Reply-Applic-ID
-	Aux-Applic-Info	Aux-Applic-Info
-	Message size	-
Time of expiry-	Time of expiry	
-	Message Reference	-
-	Subject	Subject
-	Priority	Priority
-	Sender address	Sender address
-	Stored	-
-	Reply-Charging	Reply-Charging
-	Reply-Deadline	Reply-Deadline
-	Reply-Charging-Size	Reply-Charging-Size
-	Reply-Charging-ID	Reply-Charging-ID-
-	Element-Descriptor	-
-	MM recommended retrieval mode	-
-	Text explaining MM recommended retrieval mode	-
-	-	Recipient address
-	Message class-	Message class
-	-	Message ID
-	-	MM State
-	-	MM Flags
-	-	Request Status
-	-	Request Status Text
-	-	Previously-sent-by
-	-	Previously-sent-date-and-time
-	-	Message Type
-	-	Transaction ID
-	-	MMS Version

Table K.10: Mapping MM7_extended_cancel.REQ -> MM1_cancel.REQ

Information elements in MM1_cancel.REQ	Information elements in MM7_extended_cancel.REQ
-	Transaction ID
-	Message type
-	MM7 version
-	VASP ID
-	VAS ID
-	Sender address
Cancel ID	Cancel ID
Message Type	-
Transaction ID	-
MMS Version	-

Annex L (normative): MM7 XML Schema

```
<?xml version="1.0" encoding="UTF-8"?>
<xs:schema targetNamespace="http://www.3gpp.org/ftp/Specs/archive/23_series/23.140/schema/REL-6-MM7-
1-4" xmlns:soap="http://schemas.xmlsoap.org/soap/envelope/"
xmlns:xs="http://www.w3.org/2001/XMLSchema"
xmlns:tns="http://www.3gpp.org/ftp/Specs/archive/23_series/23.140/schema/REL-6-MM7-1-4"
elementFormDefault="qualified" attributeFormDefault="unqualified">

<xs:import namespace="http://schemas.xmlsoap.org/soap/envelope/"
schemaLocation="http://schemas.xmlsoap.org/soap/envelope/"/>

    <xs:element name="TransactionID">
        <xs:annotation>
            <xs:documentation>The transaction ID that shall be included in the SOAP
Header</xs:documentation>
        </xs:annotation>
        <xs:complexType>
            <xs:simpleContent>
                <xs:extension base="xs:string">
                    <xs:attribute ref="soap:mustUnderstand"/>
                    <xs:attribute ref="soap:encodingStyle"/>
                    <xs:attribute ref="soap:actor"/>
                </xs:extension>
            </xs:simpleContent>
        </xs:complexType>
    </xs:element>
    <xs:element name="SubmitReq" type="tns:submitReqType">
        <xs:annotation>
            <xs:documentation>VASP to MMS : Sending MM from the VASP to one or more
recipients</xs:documentation>
        </xs:annotation>
    </xs:element>
    <xs:element name="SubmitRsp" type="tns:submitRspType">
        <xs:annotation>
            <xs:documentation>MMS  to VASP: Response to a VASP after MM submission
request</xs:documentation>
        </xs:annotation>
    </xs:element>
    <xs:element name="DeliverReq" type="tns:deliverReqType">
        <xs:annotation>
            <xs:documentation>MMS to VASP : Delivery of MM from the MMS Relay/Server to the VASP
</xs:documentation>
        </xs:annotation>
    </xs:element>
    <xs:element name="DeliverRsp" type="tns:deliverRspType">
        <xs:annotation>
            <xs:documentation>VASP to MMS : Response to a message delivered to the VASP from the MMS
Relay/Server</xs:documentation>
        </xs:annotation>
    </xs:element>
    <xs:element name="CancelReq" type="tns:cancelReqType">
        <xs:annotation>
            <xs:documentation>VASP  to MMS: Request to cancel a message submission
</xs:documentation>
        </xs:annotation>
    </xs:element>
    <xs:element name="CancelRsp" type="tns:genericResponseType">
        <xs:annotation>
            <xs:documentation>MMS  to VASP: Response to a VASP after MM cancellation request
</xs:documentation>
        </xs:annotation>
    </xs:element>
    <xs:element name="ReplaceReq" type="tns:replaceReqType">
        <xs:annotation>
            <xs:documentation>VASP  to MMS: Request to replace a message which was submitted
</xs:documentation>
        </xs:annotation>
    </xs:element>
    <xs:element name="ReplaceRsp" type="tns:genericResponseType">
        <xs:annotation>
            <xs:documentation>MMS  to VASP: Response to a VASP after MM replace request
</xs:documentation>
```

```
        </xs:annotation>
    </xs:element>
<xs:element name="extendedCancelReq" type="tns:extendedcancelReqType">
        <xs:annotation>
            <xs:documentation>VASP  to MMS: Extended Request to cancel a message submission
</xs:documentation>
        </xs:annotation>
    </xs:element>
    <xs:element name="extendedCancelRsp" type="tns:extendedcancelRspType">
        <xs:annotation>
            <xs:documentation>MMS  to VASP: Response to a VASP after extended MM cancellation
request </xs:documentation>
        </xs:annotation>
    </xs:element>
    <xs:element name="extendedReplaceReq" type="tns:extendedreplaceReqType">
        <xs:annotation>
            <xs:documentation>VASP  to MMS: extended Request to replace a message which was
submitted </xs:documentation>
        </xs:annotation>
    </xs:element>
    <xs:element name="extendedReplaceRsp" type="tns:extendedreplaceRspType">
        <xs:annotation>
            <xs:documentation>MMS  to VASP: Response to a VASP after extended MM cancellation
request </xs:documentation>
        </xs:annotation>
    </xs:element>
    <xs:element name="DeliveryReportReq" type="tns:deliveryReportReqType">
        <xs:annotation>
            <xs:documentation>MMS to VASP : Delivery Report from one of the MM
recipients</xs:documentation>
        </xs:annotation>
    </xs:element>
    <xs:element name="DeliveryReportRsp" type="tns:genericResponseType">
        <xs:annotation>
            <xs:documentation>VASP to MMS: Response to a delivery report delivered to the
VASP</xs:documentation>
        </xs:annotation>
    </xs:element>
    <xs:element name="ReadReplyReq" type="tns:readReplyReqType">
        <xs:annotation>
            <xs:documentation>MMS to VASP : Delivery Report from one of the MM
recipients</xs:documentation>
        </xs:annotation>
    </xs:element>
    <xs:element name="ReadReplyRsp" type="tns:genericResponseType">
        <xs:annotation>
            <xs:documentation>VASP to MMS: Response to a read reply delivered to the
VASP</xs:documentation>
        </xs:annotation>
    </xs:element>
    <xs:element name="RSErrorRsp" type="tns:genericResponseType">
        <xs:annotation>
            <xs:documentation>MMS to VASP: Error response to a any bad request sent to the MMS
Relay/Server</xs:documentation>
        </xs:annotation>
    </xs:element>
    <xs:element name="VASPErrorRsp" type="tns:genericResponseType">
        <xs:annotation>
            <xs:documentation>VASP to MMS: Error response to a any bad request sent to the
VASP</xs:documentation>
        </xs:annotation>
    </xs:element>
    <xs:complexType name="senderIDType">
        <xs:sequence>
            <xs:element name="VASPID" type="tns:entityIDType" minOccurs="0"/>
            <xs:element name="VASID" type="tns:entityIDType" minOccurs="0"/>
            <xs:element name="SenderAddress" type="tns:addressType" minOccurs="0"/>
        </xs:sequence>
    </xs:complexType>
    <xs:complexType name="submitReqType">
        <xs:complexContent>
            <xs:extension base="tns:genericVASPRequestType">
                <xs:sequence>
                    <xs:element name="Recipients" type="tns:recipientsType"/>
                    <xs:element name="ServiceCode" type="tns:serviceCodeType" minOccurs="0"/>
                    <xs:element name="LinkedID" type="tns:messageIDType" minOccurs="0"/>
                    <xs:element name="MessageClass" type="tns:messageClassType"
default="Informational" minOccurs="0"/>
```

```
                    <xs:element name="TimeStamp" type="xs:dateTime" minOccurs="0"/>
                    <xs:element name="ReplyCharging" minOccurs="0">
                        <xs:complexType>
                            <xs:attribute name="replyChargingSize" type="xs:positiveInteger"
use="optional"/>
                            <xs:attribute name="replyDeadline" type="tns:relativeOrAbsoluteDateType"
use="optional"/>
                        </xs:complexType>
                    </xs:element>
                    <xs:element name="EarliestDeliveryTime" type="tns:relativeOrAbsoluteDateType"
minOccurs="0"/>
                    <xs:element name="ExpiryDate" type="tns:relativeOrAbsoluteDateType"
minOccurs="0"/>
                    <xs:element name="DeliveryReport" type="xs:boolean" minOccurs="0"/>
                    <xs:element name="ReadReply" type="xs:boolean" minOccurs="0"/>
                    <xs:element name="Priority" type="tns:priorityType" minOccurs="0"/>
                    <xs:element name="Subject" type="xs:string" minOccurs="0"/>
                    <xs:element name="ChargedParty" type="tns:chargedPartyType" minOccurs="0"/>
                    <xs:element name="ChargedPartyID" type="tns:chargedPartyIDType" minOccurs="0"/>
                    <xs:element name="DistributionIndicator" type="xs:boolean" minOccurs="0"/>
                    <xs:element name="DeliveryCondition" type="tns:deliveryConditionType"
minOccurs="0"/>
                    <xs:element name="ApplicID" type="xs:string" minOccurs="0"/>
                    <xs:element name="ReplyApplicID" type="xs:string" minOccurs="0"/>
                    <xs:element name="AuxApplicInfo" type="xs:string" minOccurs="0"/>
                    <xs:element name="ContentClass" type="tns:contentClassType" minOccurs="0"/>
                    <xs:element name="DRMContent" type="xs:boolean" minOccurs="0"/>
    <xs:element name="Content" type="tns:contentReferenceType" minOccurs="0"/>
                </xs:sequence>
            </xs:extension>
        </xs:complexContent>
    </xs:complexType>
    <xs:complexType name="submitRspType">
        <xs:complexContent>
            <xs:extension base="tns:genericResponseType">
                <xs:sequence>
                    <xs:element name="MessageID" type="tns:messageIDType"/>
                </xs:sequence>
            </xs:extension>     </xs:complexContent>
    </xs:complexType>
    <xs:complexType name="deliverReqType">
        <xs:complexContent>
            <xs:extension base="tns:genericRSReqType">
                <xs:sequence>
                    <xs:element name="VASPID" type="tns:entityIDType" minOccurs="0"/>
                    <xs:element name="VASID" type="tns:entityIDType" minOccurs="0"/>
                    <xs:element name="LinkedID" type="tns:messageIDType" minOccurs="0"/>
                    <xs:element name="Sender" type="tns:addressType"/>
                    <xs:element name="Recipients" type="tns:recipientsType" minOccurs="0"/>
                    <xs:element name="Previouslysentby" type="tns:previouslySentByType"
minOccurs="0"/>
                    <xs:element name="Previouslysentdateandtime" type="tns:previouslySentByDateTime"
minOccurs="0"/>
                    <xs:element name="SenderSPI" type="tns:serviceProviderIDType" minOccurs="0"/>
                    <xs:element name="RecipientSPI" type="tns:serviceProviderIDType" minOccurs="0"/>
                    <xs:element name="TimeStamp" type="xs:dateTime" minOccurs="0"/>
                    <xs:element name="ReplyChargingID" type="tns:messageIDType" minOccurs="0"/>
                    <xs:element name="Priority" type="tns:priorityType" minOccurs="0"/>
                    <xs:element name="Subject" type="xs:string" minOccurs="0"/>
                    <xs:element name="ApplicID" type="xs:string" minOccurs="0"/>
                    <xs:element name="ReplyApplicID" type="xs:string" minOccurs="0"/>
                    <xs:element name="AuxApplicInfo" type="xs:string" minOccurs="0"/>
                    <xs:element name="UACapabilities" type="tns:capabilitiesType" minOccurs="0"/>
                    <xs:element name="Content" type="tns:contentReferenceType" minOccurs="0"/>
                </xs:sequence>
            </xs:extension>
        </xs:complexContent>
    </xs:complexType>
    <xs:complexType name="deliverRspType">
        <xs:complexContent>
            <xs:extension base="tns:genericResponseType">
                <xs:sequence>
                    <xs:element name="ServiceCode" type="tns:serviceCodeType" minOccurs="0"/>
                </xs:sequence>
            </xs:extension>
        </xs:complexContent>
    </xs:complexType>
    <xs:complexType name="cancelReqType">
```

```
        <xs:complexContent>
            <xs:extension base="tns:genericVASPRequestType">
                <xs:sequence>
                    <xs:element name="MessageID" type="tns:messageIDType"/>
                    <xs:element name="ApplicID" type="xs:string" minOccurs="0"/>
                    <xs:element name="ReplyApplicID" type="xs:string" minOccurs="0"/>
                    <xs:element name="AuxApplicInfo" type="xs:string" minOccurs="0"/>
                </xs:sequence>
            </xs:extension>
        </xs:complexContent>
    </xs:complexType>
    <xs:complexType name="extendedcancelReqType">
        <xs:complexContent>
            <xs:extension base="tns:genericVASPRequestType">
                <xs:sequence>
                    <xs:element name="CancelID" type="tns:messageIDType"/>
                </xs:sequence>
            </xs:extension>
        </xs:complexContent>
    </xs:complexType>
    <xs:complexType name="extendedcancelRspType">
        <xs:annotation>
            <xs:documentation>Extended Cancel Response</xs:documentation>
        </xs:annotation>
        <xs:sequence>
            <xs:element name="MM7Version" type="tns:versionType"/>
            <xs:element name="Status" type="tns:extendedcancelresponseStatusType"/>
        </xs:sequence>
    </xs:complexType>
    <xs:complexType name="replaceReqType">
        <xs:complexContent>
            <xs:extension base="tns:genericVASPRequestType">
                <xs:sequence>
                    <xs:element name="MessageID" type="tns:messageIDType"/>
                    <xs:element name="ServiceCode" type="tns:serviceCodeType" minOccurs="0"/>
                    <xs:element name="TimeStamp" type="xs:dateTime" minOccurs="0"/>
                    <xs:element name="ReadReply" type="xs:boolean" minOccurs="0"/>
                    <xs:element name="EarliestDeliveryTime" type="tns:relativeOrAbsoluteDateType"
minOccurs="0"/>
                    <xs:element name="DistributionIndicator" type="xs:boolean" minOccurs="0"/>
                    <xs:element name="ContentClass" type="tns:contentClassType" minOccurs="0"/>
                    <xs:element name="DRMContent" type="xs:boolean" minOccurs="0"/>
                    <xs:element name="ApplicID" type="xs:string" minOccurs="0"/>
                    <xs:element name="ReplyApplicID" type="xs:string" minOccurs="0"/>
                    <xs:element name="AuxApplicInfo" type="xs:string" minOccurs="0"/>
                    <xs:element name="Content" type="tns:contentReferenceType" minOccurs="0"/>
                </xs:sequence>
            </xs:extension>
        </xs:complexContent>
    </xs:complexType>
    <xs:complexType name="extendedreplaceReqType">
                <xs:sequence>
                    <xs:element name="MM7Version" type="tns:versionType"/>
                    <xs:element name="VASPID" type="tns:entityIDType" minOccurs="0"/>
                    <xs:element name="VASID" type="tns:entityIDType" minOccurs="0"/>
                    <xs:element name="ServiceCode" type="tns:serviceCodeType" minOccurs="0"/>
                    <xs:element name="ReplaceID" type="tns:messageIDType" minOccurs="0"/>
                    <xs:element name="TimeStamp" type="xs:dateTime" minOccurs="0"/>
                    <xs:element name="EarliestDeliveryTime" type="tns:relativeOrAbsoluteDateType"
minOccurs="0"/>
                    <xs:element name="ExpiryDate" type="tns:relativeOrAbsoluteDateType"
minOccurs="0"/>
                    <xs:element name="ReadReply" type="xs:boolean" minOccurs="0"/>
                    <xs:element name="DeliveryReport" type="xs:boolean" minOccurs="0"/>
                    <xs:element name="Content" type="tns:contentReferenceType" minOccurs="0"/>
                </xs:sequence>
    </xs:complexType>
    <xs:complexType name="extendedreplaceRspType">
        <xs:annotation>
            <xs:documentation>Extended Replace Response</xs:documentation>
        </xs:annotation>
        <xs:sequence>
            <xs:element name="MM7Version" type="tns:versionType"/>
            <xs:element name="MessageID" type="tns:messageIDType"/>
            <xs:element name="Status" type="tns:extendedcancelresponseStatusType"/>
        </xs:sequence>
    </xs:complexType>
    <xs:complexType name="deliveryReportReqType">
```

```
        <xs:complexContent>
            <xs:extension base="tns:genericRSReqType">
                <xs:sequence>
                    <xs:element name="MessageID" type="tns:messageIDType"/>
                    <xs:element name="Recipient" type="tns:addressType"/>
                    <xs:element name="Sender" type="tns:addressType"/>
                    <xs:element name="Date" type="xs:dateTime"/>
                    <xs:element name="MMStatus" type="tns:mmDeliveryStatusType"/>
                    <xs:element name="MMStatusExtension" type="tns:MMStatusExtensionType"
minOccurs="0"/>
                    <xs:element name="StatusText" type="xs:string" minOccurs="0"/>
                    <xs:element name="ApplicID" type="xs:string" minOccurs="0"/>
                    <xs:element name="ReplyApplicID" type="xs:string" minOccurs="0"/>
                    <xs:element name="AuxApplicInfo" type="xs:string" minOccurs="0"/>
                    <xs:element name="UACapabilities" type="tns:capabilitiesType" minOccurs="0"/>
                </xs:sequence>
            </xs:extension>
        </xs:complexContent>
    </xs:complexType>
    <xs:complexType name="readReplyReqType">
        <xs:complexContent>
            <xs:extension base="tns:genericRSReqType">
                <xs:sequence>
                    <xs:element name="MessageID" type="tns:messageIDType"/>
                    <xs:element name="Recipient" type="tns:addressType"/>
                    <xs:element name="Sender" type="tns:addressType"/>
                    <xs:element name="TimeStamp" type="xs:dateTime"/>
                    <xs:element name="MMStatus" type="tns:mmReadStatusType"/>
                    <xs:element name="StatusText" type="xs:string" minOccurs="0"/>
                    <xs:element name="ApplicID" type="xs:string" minOccurs="0"/>
                    <xs:element name="ReplyApplicID" type="xs:string" minOccurs="0"/>
                    <xs:element name="AuxApplicInfo" type="xs:string" minOccurs="0"/>
                </xs:sequence>
            </xs:extension>
        </xs:complexContent>
    </xs:complexType>
    <xs:complexType name="genericRSReqType">
        <xs:annotation>
            <xs:documentation>base for all request messages from R/S to VASP</xs:documentation>
        </xs:annotation>
        <xs:sequence>
            <xs:element name="MM7Version" type="tns:versionType"/>
            <xs:element name="MMSRelayServerID" type="tns:entityIDType" minOccurs="0"/>
        </xs:sequence>
    </xs:complexType>
    <xs:complexType name="genericVASPRequestType">
        <xs:annotation>
            <xs:documentation>Base type for all requests from VASP to R/S</xs:documentation>
        </xs:annotation>
        <xs:sequence>
            <xs:element name="MM7Version" type="tns:versionType"/>
            <xs:element name="SenderIdentification" type="tns:senderIDType"/>
        </xs:sequence>
    </xs:complexType>
    <xs:complexType name="genericResponseType">
        <xs:annotation>
            <xs:documentation>Any simple response sent </xs:documentation>
        </xs:annotation>
        <xs:sequence>
            <xs:element name="MM7Version" type="tns:versionType"/>
            <xs:element name="Status" type="tns:responseStatusType"/>
        </xs:sequence>
    </xs:complexType>
    <xs:complexType name="responseStatusType">
        <xs:annotation>
            <xs:documentation>Status information conveyed in responses</xs:documentation>
        </xs:annotation>
        <xs:all>
            <xs:element name="StatusCode">
                <xs:simpleType>
                    <xs:restriction base="tns:statusCodeType"/>
                </xs:simpleType>
            </xs:element>
            <xs:element name="StatusText" type="tns:statusTextType"/>
            <xs:element name="Details" type="tns:anyDataType" minOccurs="0"/>
        </xs:all>
    </xs:complexType>
    <xs:complexType name="extendedcancelresponseStatusType">
```

```
        <xs:annotation>
            <xs:documentation>Status information conveyed in responses</xs:documentation>
        </xs:annotation>
        <xs:all>
            <xs:element name="StatusCode">
                <xs:simpleType>
                    <xs:restriction base="tns:statusCodeType"/>
                </xs:simpleType>
            </xs:element>
        </xs:all>
    </xs:complexType>
    <xs:simpleType name="mmDeliveryStatusType">
        <xs:annotation>
            <xs:documentation>Statuses for MM7_delivery_report</xs:documentation>
        </xs:annotation>
        <xs:restriction base="xs:string">
            <xs:enumeration value="Expired"/>
            <xs:enumeration value="Retrieved"/>
            <xs:enumeration value="Rejected"/>
            <xs:enumeration value="Indeterminate"/>
            <xs:enumeration value="Forwarded"/>
            <xs:enumeration value="Unrecognised"/>
            <xs:enumeration value="Deferred"/>
            <xs:enumeration value="DeliveryConditionNotMet"/>
        </xs:restriction>
    </xs:simpleType>
    <xs:simpleType name="mmReadStatusType">
        <xs:annotation>
            <xs:documentation>Statuses for MM7_read_reply</xs:documentation>
        </xs:annotation>
        <xs:restriction base="xs:string">
            <xs:enumeration value="Indeterminate"/>
            <xs:enumeration value="Read"/>
            <xs:enumeration value="Deleted"/>
        </xs:restriction>
    </xs:simpleType>
    <xs:simpleType name="messageIDType">
        <xs:annotation>
            <xs:documentation>Message ID</xs:documentation>
        </xs:annotation>
        <xs:restriction base="xs:string"/>
    </xs:simpleType>
    <xs:group name="AddressGroup">
        <xs:choice>
            <xs:element name="RFC2822Address">
                <xs:complexType>
                    <xs:simpleContent>
                        <xs:extension base="xs:string">
                            <xs:attribute name="displayOnly" type="xs:boolean" use="optional"
default="false"/>
                            <xs:attributeGroup ref="tns:addressSecurity"/>
                        </xs:extension>
                    </xs:simpleContent>
                </xs:complexType>
            </xs:element>
            <xs:element name="Number">
                <xs:complexType>
                    <xs:simpleContent>
                        <xs:extension base="xs:string">
                            <xs:attribute name="displayOnly" type="xs:boolean" use="optional"
default="false"/>
                            <xs:attributeGroup ref="tns:addressSecurity"/>
                        </xs:extension>
                    </xs:simpleContent>
                </xs:complexType>
            </xs:element>
            <xs:element name="ShortCode">
                <xs:complexType>
                    <xs:simpleContent>
                        <xs:extension base="xs:string">
                            <xs:attribute name="displayOnly" type="xs:boolean" use="optional"
default="false"/>
                            <xs:attributeGroup ref="tns:addressSecurity"/>
                        </xs:extension>
                    </xs:simpleContent>
                </xs:complexType>
            </xs:element>
        </xs:choice>
```

```
    </xs:group>
    <xs:complexType name="multiAddressType">
        <xs:sequence maxOccurs="unbounded">
            <xs:group ref="tns:AddressGroup"/>
        </xs:sequence>
    </xs:complexType>
    <xs:complexType name="addressType">
        <xs:group ref="tns:AddressGroup"/>
    </xs:complexType>
    <xs:attributeGroup name="addressSecurity">
        <xs:attribute name="addressCoding" type="tns:addressCodingType" use="optional"/>
        <xs:attribute name="id" type="xs:ID" use="optional"/>
    </xs:attributeGroup>
    <xs:simpleType name="addressCodingType">
        <xs:annotation>
            <xs:documentation>obfuscated or encrypted address type</xs:documentation>
        </xs:annotation>
        <xs:restriction base="xs:string">
            <xs:enumeration value="encrypted"/>
            <xs:enumeration value="obfuscated"/>
        </xs:restriction>
    </xs:simpleType>
    <xs:complexType name="previouslySentByType">
        <xs:sequence>
            <xs:element name="UserAgent" type="tns:userAgentInfoType" minOccurs="0"
maxOccurs="unbounded"/>
        </xs:sequence>
    </xs:complexType>
    <xs:complexType name="previouslySentByDateTime">
        <xs:sequence>
            <xs:element name="DateTime" type="tns:userAgentDateTimeType" minOccurs="0"
maxOccurs="unbounded"/>
        </xs:sequence>
    </xs:complexType>
    <xs:complexType name="userAgentInfoType">
        <xs:complexContent>
            <xs:extension base="tns:addressType">
                <xs:attribute name="sequence" type="xs:positiveInteger" use="optional"/>
            </xs:extension>
        </xs:complexContent>
    </xs:complexType>
    <xs:complexType name="userAgentDateTimeType">
        <xs:simpleContent>
            <xs:extension base="tns:relativeOrAbsoluteDateType">
                <xs:attribute name="sequence" type="xs:positiveInteger" use="optional"/>
            </xs:extension>
        </xs:simpleContent>
    </xs:complexType>
    <xs:simpleType name="serviceProviderIDType">
        <xs:annotation>
            <xs:documentation>Service Provider Identification</xs:documentation>
        </xs:annotation>
        <xs:restriction base="xs:string"/>
    </xs:simpleType>
    <xs:simpleType name="chargedPartyIDType">
        <xs:annotation>
            <xs:documentation>The address of the third party which is expected to pay for the
MM</xs:documentation>
        </xs:annotation>
        <xs:restriction base="xs:string"/>
    </xs:simpleType>
    <xs:simpleType name="MMStatusExtensionType">
        <xs:restriction base="xs:string">
            <xs:enumeration value="RejectionByMMSRecipient"/>
            <xs:enumeration value="RejectionByOtherRS"/>
        </xs:restriction>
    </xs:simpleType>
    <xs:complexType name="serviceCodeType">
        <xs:annotation>
            <xs:documentation>Used to identify the specific service given for billing
purposes</xs:documentation>
        </xs:annotation>
        <xs:simpleContent>
            <xs:extension base="xs:string">
                <xs:anyAttribute namespace="##other" processContents="lax"/>
            </xs:extension>
        </xs:simpleContent>
    </xs:complexType>
```

```
    <xs:simpleType name="entityIDType">
        <xs:annotation>
            <xs:documentation>String used to identify the VAS, VASP and MMSC</xs:documentation>
        </xs:annotation>
        <xs:restriction base="xs:string"/>
    </xs:simpleType>
    <xs:complexType name="recipientsType">
        <xs:annotation>
            <xs:documentation>At least one of To,CC,Bcc</xs:documentation>
        </xs:annotation>
        <xs:sequence maxOccurs="unbounded">
            <xs:choice>
                <xs:element name="To" type="tns:multiAddressType"/>
                <xs:element name="Cc" type="tns:multiAddressType"/>
                <xs:element name="Bcc" type="tns:multiAddressType"/>
            </xs:choice>
        </xs:sequence>
    </xs:complexType>
    <xs:simpleType name="messageClassType">
        <xs:annotation>
            <xs:documentation>Message class</xs:documentation>
        </xs:annotation>
        <xs:restriction base="xs:string">
            <xs:enumeration value="Personal"/>
            <xs:enumeration value="Informational"/>
            <xs:enumeration value="Advertisement"/>
            <xs:enumeration value="Auto"/>
        </xs:restriction>
    </xs:simpleType>
    <xs:simpleType name="priorityType">
        <xs:annotation>
            <xs:documentation>Priority of MM</xs:documentation>
        </xs:annotation>
        <xs:restriction base="xs:string">
            <xs:enumeration value="Normal"/>
            <xs:enumeration value="High"/>
            <xs:enumeration value="Low"/>
        </xs:restriction>
    </xs:simpleType>
    <xs:simpleType name="relativeOrAbsoluteDateType">
        <xs:annotation>
            <xs:documentation>Date which can be relative or absolute</xs:documentation>
        </xs:annotation>
        <xs:union memberTypes="xs:dateTime xs:duration"/>
    </xs:simpleType>
    <xs:complexType name="deliveryConditionType">
        <xs:annotation>
            <xs:documentation>DeliveryConditions provided in MM7SubmitReq, that all need to be
respected for the MM to be delivered </xs:documentation>
        </xs:annotation>
        <xs:sequence>
            <xs:element name="DC" type="xs:positiveInteger" minOccurs="0" maxOccurs="unbounded"/>
        </xs:sequence>
    </xs:complexType>
    <xs:simpleType name="chargedPartyType">
        <xs:annotation>
            <xs:documentation>Allows specification of which party - Sender or Reciever pays for
transmission</xs:documentation>
        </xs:annotation>
        <xs:restriction base="xs:string">
            <xs:enumeration value="Sender"/>
            <xs:enumeration value="Recipient"/>
            <xs:enumeration value="Both"/>
            <xs:enumeration value="Neither"/>
            <xs:enumeration value="ThirdParty"/>
        </xs:restriction>
    </xs:simpleType>
    <xs:simpleType name="contentClassType">
        <xs:annotation>
            <xs:documentation>Content Class Type used in MM7_Submit and MM7_Replace
</xs:documentation>
        </xs:annotation>
        <xs:restriction base="xs:string">
            <xs:enumeration value="text"/>
            <xs:enumeration value="image-basic"/>
            <xs:enumeration value="image-rich"/>
            <xs:enumeration value="video-basic"/>
            <xs:enumeration value="video-rich"/>
```

```
            <xs:enumeration value="megapixel"/>
            <xs:enumeration value="content-basic"/>
            <xs:enumeration value="content-rich"/>
        </xs:restriction>
    </xs:simpleType>
    <xs:simpleType name="versionType">
        <xs:annotation>
            <xs:documentation>Version number in the format of x.y.z </xs:documentation>
        </xs:annotation>
        <xs:restriction base="xs:string">
            <xs:enumeration value="6.8.0"/>
            <xs:enumeration value="6.6.0"/>
            <xs:enumeration value="6.5.0"/>
            <xs:enumeration value="6.4.0"/>
            <xs:enumeration value="6.3.0"/>
            <xs:enumeration value="5.10.0"/>
            <xs:enumeration value="5.8.0"/>
            <xs:enumeration value="5.6.0"/>
            <xs:enumeration value="5.5.0"/>
            <xs:enumeration value="5.3.0"/>
        </xs:restriction>
    </xs:simpleType>
    <xs:simpleType name="statusCodeType">
        <xs:annotation>
            <xs:documentation>request status resonse codes in RES </xs:documentation>
        </xs:annotation>
        <xs:restriction base="xs:positiveInteger"/>
    </xs:simpleType>
    <xs:complexType name="contentReferenceType">
        <xs:annotation>
            <xs:documentation>content element including only href</xs:documentation>
        </xs:annotation>
        <xs:attribute name="href" type="xs:anyURI" use="required"/>
        <xs:attribute name="allowAdaptations" type="xs:boolean" default="true" use="optional"/>
    </xs:complexType>
<xs:complexType name="capabilitiesType">
        <xs:annotation>
            <xs:documentation>Base attributes for transfering user agent capabilities from R/S to
VASP, UAProf is e.g UserAgent Name, or URL to the UAProfile RDF. The TimeStamp is used to convey the
last known update by the MMS R/S to the UACapabilities</xs:documentation>
        </xs:annotation>
        <xs:attribute name="UAProf" type="xs:string" use="optional"/>
        <xs:attribute name="TimeStamp" type="tns:relativeOrAbsoluteDateType" use="optional"/>
    </xs:complexType>
    <xs:complexType name="anyDataType">
        <xs:annotation>
            <xs:documentation>Any element and attribute </xs:documentation>
        </xs:annotation>
        <xs:complexContent>
            <xs:restriction base="xs:anyType">
                <xs:sequence>
                    <xs:any processContents="lax" minOccurs="0" maxOccurs="unbounded"/>
                </xs:sequence>
            </xs:restriction>
        </xs:complexContent>
    </xs:complexType>
    <xs:simpleType name="statusTextType">
        <xs:annotation>
            <xs:documentation>list of standard human-readable status descriptions</xs:documentation>
        </xs:annotation>
        <xs:restriction base="xs:string"/>
    </xs:simpleType>
</xs:schema>
```

Annex L1 (informative): Schema Version Handling

This annex defines the version numbers present in the MM7 Schema / Stage 3. (Annex L)

The schema target and default namespace versions are independent of the specification version.

MM7 versionType defines a list of specification values. The top element holds the current specification value for which the stage 3 was created against.

In the event of a stage two specification version X.Y.Z (cf. clause "Foreword") change without a stage three change, the schema version present in the target namespace URL or MM7 version type definition remain unchanged.

If a change is made to the schema, a new targetNamespace is used together with a new entry to the versionType enumerated table to indicate the latest specification.

Example 1:

REL-6-MM7-1-2 changes to REL-6-MM7-1-3 and the latest specification version e.g. 6.6.0 is added to the versionType definition.

Schema version present in the target namespace URL shown in bold text:

```
<xs:schema targetNamespace="http://www.3gpp.org/ftp/Specs/archive/23_series/23.140/schema/REL-6-MM7-1-32"
xmlns:soap="http://schemas.xmlsoap.org/soap/envelope/" xmlns:xs="http://www.w3.org/2001/XMLSchema"
xmlns:tns="http://www.3gpp.org/ftp/Specs/archive/23_series/23.140/schema/REL-6-MM7-1-32"
```

MM7 VersionType definition

```
<xs:simpleType name="versionType">
        <xs:annotation>
            <xs:documentation>Version number in the format of x.y.z </xs:documentation>
        </xs:annotation>
        <xs:restriction base="xs:string">
            <xs:enumeration value="6.6.0"/>
            <xs:enumeration value="6.5.0"/>
        </xs:restriction>
</xs:simpleType>
```

Example 2:

if changes done in version 6.Y.Z do impact MM7-1-A, then a version 6.Y+1.0 will be created:

- With adding <xs:enumeration value="X.Y+1.0"/> to the "versionType"

```
<xs:simpleType name="versionType">
    <xs:annotation>
        <xs:documentation>Version number in the format of x.y.z </xs:documentation>
    </xs:annotation>
    <xs:restriction base="xs:string">
        <xs:enumeration value="6.Y+1.0"/>
        <xs:enumeration value="6.Y.0"/>
    </xs:restriction>
  </xs:simpleType>
```

- With changing the NameSpace <xs:schema targetNamespace="http://www.3gpp.org/ftp/Specs/archive/23_series/23.140/schema/**REL-6-MM7-1-A+1**"

- With changing the XMLschema xmlns:soap="http://schemas.xmlsoap.org/soap/envelope/"
  xmlns:xs="http://www.w3.org/2001/XMLSchema"
  xmlns:tns="http://www.3gpp.org/ftp/Specs/archive/23_series/23.140/schema/**REL-6-MM7-1-A+1**"

if changes made to version 6.Y.Z do not impact MM7-1-A, then a version 6.Y+1.0 will be created:

- Without adding <xs:enumeration value="6.Y.Z"/> to the "versionType"
- Without changing the NameSpace <xs:schema
  targetNamespace="http://www.3gpp.org/ftp/Specs/archive/23_series/23.140/schema/**REL-6-MM7-1-A**"
- Without changing the XMLschema xmlns:soap="http://schemas.xmlsoap.org/soap/envelope/"
  xmlns:xs="http://www.w3.org/2001/XMLSchema"
- xmlns:tns="http://www.3gpp.org/ftp/Specs/archive/23_series/23.140/schema/**REL-6-MM7-1-A**"

Annex M (informative): Recipient MMS Relay/Server Delivery Report generation and presentation to the originator MMS User Agent.

Table M.1: Recipient MMS R/S Delivery Report generation and presentation to the originator MMS UA

		Originator MMS UA	
		Request a Delivery Report	Does not request a Delivery Report
Originator MMS R/S	Request a Delivery Report	Recipient permits sending Delivery Report, then recipient R/S: Sends Delivery Report Forward to Orig UA = Yes	Recipient permits sending Delivery Report, then recipient R/S: Sends Delivery Report Forward to Orig UA = No
		Recipient does not permit sending Delivery Report, then recipient R/S: Sends Delivery Report Forward to Orig UA = No	Recipient does not permit sending Delivery Report, then recipient R/S: Sends Delivery Report Forward to Orig UA = No
	Does not request a Delivery Report	Recipient permits sending Delivery Report, then recipient R/S: Sends Delivery Report Forward to Orig UA = Yes	Recipient permits sending Delivery Report, then recipient R/S: Does not send Delivery Report
		Recipient does not permit sending Delivery Report, then recipient R/S: Does not send Delivery Report	Recipient does not permit sending Delivery Report, then recipient R/S: Does not send Delivery Report

Annex N (normative): Information Element mapping for the support of MSCF

This annex defines the mapping of MM1, MM4, MM7 abstract message information elements to and from MM10 message information elements.

Table N.1: Mapping MM1_submit.REQ -> MM10_Interrogation.REQ

Information elements in MM1_submit.REQ	Information elements in MM10_interrogation.REQ
Message Type	-
Transaction ID	-
MMSVersion	-
Recipient address	Initial Recipient Address
Content type	-
Sender address	Sender Address
Message class	-
Date and time	-
Time of Expiry	-
Earliest delivery time	-
Delivery report	Delivery Report
Reply-Charging	-
Reply-Deadline	-
Reply-Charging-Size	-
Priority	-
Sender visibility	Sender Visibility
Store	-
MM State	-
MM Flags	-
Read reply	Read Reply
Subject	
Reply-Charging-ID	
Content	
-	Message type
-	Trigger Event
-	Served User Identity (Note 1)
	Served User IMSI (Note 2)
-	Originating Interface (MM1)
-	Service Key
Note 1: The Served User Identity contains the authentic subscriber identification as derived from the MM1 authentication mechanism	
Note 2: The Served User IMSI shall be present if made available to the MMS Relay/Server as part of the MM1 authentication process.	

Table N.2: Mapping MM4_forward.REQ -> MM10_Interrogation.REQ

Information elements in MM7_submit.REQ	Information elements in MM10_interrogation.REQ
3GPP MMS Version	-
Message Type	-
Transaction ID	-
Message ID	-
Recipient(s) address	Initial Recipient Address
Sender address	Sender Address
Content type	
Message class	-
Date and time	-
Time of Expiry	-
Delivery report	Delivery Report
Originator R/S delivery report	-
Priority	-
Sender visibility	Sender Visibility
Read reply	Read Reply
Subject	-
Acknowledgement Request	-
Forward_counter	-
Previously-sent-by	-
Previously-sent-date-and-time	-
Content	-
-	Message type
-	Trigger Event
-	Originating Interface (MM4)
-	Service Key
-	Served User Identity

Table N.3: Mapping MM7_submit.REQ -> MM10_Interrogation.REQ

Information elements in MM7_submit.REQ	Information elements in MM10_interrogation.REQ
Transaction ID	-
Message type	-
MM7 version	-
VASP ID	Served User Identity
VAS ID	Served User Identity
Sender address	Sender Address
Recipient address	Initial Recipient Address
Service code	-
Linked ID	-
Message class	-
Date and time	-
Time of Expiry	-
Earliest delivery time	-
Delivery report	Delivery Report
Read Reply	Read Reply
Reply-Charging	-
Reply-Deadline	-
Reply-Charging-Size	-
Priority	-
Subject	-
Adaptations	-
Charged Party	-
Content type	-
Content	-
Message Distribution Indicator	-
Charged Party ID	-
Delivery Condition	-
Transaction ID	-
Message type	-
	Message type
	Trigger Event
	Originating Interface (MM7)
	Service Key

Table N.4: Mapping MM10_interrogation.RES -> MM1_Notification.REQ and MM1_retrieve.RES

Information elements in MM10_Interrogation.RES	Information elements in MM1_notification.REQ	Information elements in MM1_retrieve.RES
Message Type	-	-
Result Code	-	-
Delivery report	Delivery report	Delivery report
Sender visibility	-	-
Read reply	-	Read reply
Presentation-address	-	Recipient address
Routeing-Address	-	-
Sender-Address	Sender address	Sender address
CDR information	-	-
-	Message Type	Message Type
-	Transaction ID	Transaction ID
-	MMS Version	MMS Version
-	Message class	Message class
-	Message size	-
-	Time of expiry	-
-	Message Reference	-
-	Subject	Subject
-	Priority	Priority
-	Stored	-
-	Reply-Charging	Reply-Charging
-	Reply-Deadline	Reply-Deadline
-	Reply-Charging-Size	Reply-Charging-Size
-	Reply-Charging-ID	Reply-Charging-ID
-	Element-Descriptor	-
-	MM recommended retrieval mode	-
-	Text explaining MM recommended retrieval mode	-
-	Message Distribution Indicator	-
-	-	Message ID
-	-	Content type
-	-	Date and time
-	-	MM State
-	-	MM Flags
-	-	Request Status
-	-	Request Status Text
-	-	Previously-sent-by
-	-	Previously-sent-date-and-time
-	-	Message Distribution Indicator
-	-	Content

Table N.5: Mapping MM10_interrogation.RES -> MM4_Forward.REQ

Information elements in MM10_interrogation.RES	Information elements in MM4_forward.REQ
Message Type	-
Result Code	-
Delivery report	Delivery report
Sender visibility	Sender visibility
Read reply	Read reply
Presentation-address	Recipient(s) address
Routeing Address	(Note 1)
Sender Address	Sender address
CDR information	-
-	3GPP MMS Version
-	Message Type
-	Transaction ID
-	Message ID
-	Content type
-	Message class
-	Date and time
-	Time of Expiry
-	Originator R/S delivery report
-	Priority
-	Subject
-	Acknowledgement Request
-	Forward_counter
-	Previously-sent-by
-	Previously-sent-date-and-time
-	Content
Note 1: The Routeing address is used by the MMS relay server to determine the MM4 routeing address used on SMTP level	

Table N.6: Mapping MM10_interrogation.RES -> MM7_Deliver.REQ

Information elements in MM10_interrogation.RES	Information elements in MM4_forward.REQ
Message Type	-
Result Code	-
Delivery report	Delivery Report
Sender visibility	-
Read reply	Read Reply
Presentation-address	Recipient address
Routeing Address	-
Sender Address	Sender address
CDR information	-
-	Transaction ID
-	Message type
-	MM7 version
-	MMS Relay/Server ID
-	Linked ID
-	Previously-sent-by
-	Previously-sent-date-and-time
-	Sender SPI
-	Recipient SPI
-	Date and time
-	Reply-Charging-ID
-	Priority
-	Subject
-	Content type
-	Content

Annex O (informative): Change history

TSG#	TSG Doc	CR	Rev	Rel	Subject	Cat	Vers-Curr	Vers-New	T2 Doc	Workitem
TP-07	TP-000028				New		2.0.0	3.0.0		
					Editorial change by MCC		3.0.0	3.0.1		
TP-09	TP-000144	001	-	Rel-4	Set of mandatory media formats for MMS	B	3.0.1	4.0.0	T2-000555	MMS
TP-10	TP-000195	002	-	Rel-4	High-level description of MMS	B	4.0.0	4.1.0	T2-000791	MMS
TP-11	TP-010029	003	-	Rel-4	High-level description of MMS - part II	B	4.1.0	4.2.0	T2-010264	MMS
TP-12	TP-010128	004	-	Rel-4	Corrections on MM4 example	F	4.2.0	4.3.0	T2-010537	MMS
TP-12	TP-010128	005	-	Rel-4	MMS Media Codec/Format – Corrections, Clarifications and Updates	F	4.2.0	4.3.0	T2-010539	MMS
TP-12	TP-010128	006	-	Rel-4	Address Hiding and Read-Reply Report	F	4.2.0	4.3.0	T2-010559	MMS
TP-12	TP-010128	007	-	Rel-4	Correction of MMSE definition	F	4.2.0	4.3.0	T2-010535	MMS
TP-13	TP-010194	008	-	Rel-4	Clarification of REL-4 MMS authentication	F	4.3.0	4.4.0	T2-010736	MMS
TP-13	TP-010194	009	-	Rel-4	MMS address hiding	F	4.3.0	4.4.0	T2-010737	MMS
TP-13	TP-010194	010	-	Rel-5	New Figure 5: Interworking with different MMSEs	D	4.3.0	5.0.0	T2-010741	MESS5-MMS
TP-13	TP-010194	011	-	Rel-5	Priority field in notification message	B	4.3.0	5.0.0	T2-010748	MESS5-MMS
TP-13	TP-010194	012	-	Rel-5	Detailed Notification	B	4.3.0	5.0.0	T2-010803	MESS5-MMS
TP-13	TP-010194	013	-	Rel-4	Correction to MMS MM4 interface	F	4.3.0	4.4.0	T2-010807	MMS
TP-13	TP-010194	014	-	Rel-5	Editorial changes	D	4.3.0	5.0.0	T2-010816	MESS5-MMS
TP-13	TP-010194	015	-	Rel-4	Refinement of the reply-charging service behaviour description.	F	4.3.0	4.4.0	T2-010848	MMS
TP-13	TP-010194	016	-	Rel-4	Correction to MMS MM4 interface, delivery report	F	4.3.0	4.4.0	T2-010849	MMS
TP-13	TP-010194	017	-	Rel-5	Clarifications and Editorial Changes	F	4.3.0	5.0.0	T2-010850	MESS5-MMS
TP-14	TP-010280	019	-	Rel-5	Reference to TS 29.061 specification on RADIUS usage	A	5.0.0	5.1.0	T2-011020	MESS5-MMS
TP-14	TP-010280	020	-	Rel-5	Clarification of the reply-charging service behaviour description	F	5.0.0	5.1.0	T2-011043	MESS5-MMS
TP-14	TP-010280	023	-	Rel-5	Clarification of Forwarding in MM1 message retrieval	A	5.0.0	5.1.0	T2-011113	MESS5-MMS
TP-14	TP-010280	025	-	Rel-5	Removing inconsistency of mandated functionality	A	5.0.0	5.1.0	T2-011116	MESS5-MMS
TP-14	TP-010280	026	-	Rel-5	Correction of MM Status Code	A	5.0.0	5.1.0	T2-011119	MESS5-MMS
TP-14	TP-010280	028	-	Rel-5	Correction on MM1 and MM4 abstract messages	A	5.0.0	5.1.0	T2-011127	MESS5-MMS
TP-14	TP-010280	030	-	Rel-5	clarification of status codes in MM4_read_reply_report.REQ	A	5.0.0	5.1.0	T2-011201	MESS5-MMS
TP-14	TP-010280	031	-	Rel-5	Configuration of MMS-capable Ues	B	5.0.0	5.1.0	T2-011211	MESS5-MMS
TP-14	TP-010280	032	-	Rel-5	MMS address hiding	F	5.0.0	5.1.0	T2-011233	MESS5-MMS
TP-14	TP-010280	033	-	Rel-5	reply-charging clarifications	F	5.0.0	5.1.0	T2-011234	MESS5-MMS
TP-15	TP-020016	037	-	Rel-5	Correction on the SMTP-address address encoding	A	5.1.0	5.2.0	T2-020140	MESS5-MMS
TP-15	TP-020016	038	-	Rel-5	Introduction of SMTP service extensions over MM4	B	5.1.0	5.2.0	T2-020144	MESS5-MMS
TP-15	TP-020016	039	-	Rel-5	MM4 forward routing failure	B	5.1.0	5.2.0	T2-020145	MESS5-MMS
TP-15	TP-020016	040	-	Rel-5	Clarification of existing request status codes over MM4	B	5.1.0	5.2.0	T2-020146	MESS5-MMS
TP-15	TP-020016	041	-	Rel-5	Delivery report definition correction	F	5.1.0	5.2.0	T2-020148	MESS5-MMS
TP-15	TP-020016	042	-	Rel-5	VASP abbreviation	F	5.1.0	5.2.0	T2-020149	MESS5-MMS
TP-15	TP-020016	043	-	Rel-5	Correction on the MIME Content-Type Message format on MM4	A	5.1.0	5.2.0	T2-020151	MESS5-MMS
TP-15	TP-020016	044	-	Rel-5	Correction of addressing on MM1_Submit.REQ	F	5.1.0	5.2.0	T2-020155	MESS5-MMS
TP-15	TP-020016	045	-	Rel-5	Correction of the Forwarding Feature	A	5.1.0	5.2.0	T2-020156	MESS5-MMS
TP-15	TP-020016	046	-	Rel-5	Detection of duplicate MMs	F	5.1.0	5.2.0	T2-020157	MESS5-MMS
TP-15	TP-020016	047	-	Rel-5	Submission Description Enhancement regarding the IE “Date and Time”	F	5.1.0	5.2.0	T2-020158	MESS5-MMS
TP-15	TP-020016	048	-	Rel-5	Adding a reference to 3GPP TS 32.235	F	5.1.0	5.2.0	T2-020161	MESS5-MMS
TP-15	TP-020016	049	-	Rel-5	Terminal Capability Negotiation	B	5.1.0	5.2.0	T2-020162	MESS5-MMS
TP-15	TP-020016	050	-	Rel-5	Recipient MSISDN address resolution	B	5.1.0	5.2.0	T2-020211	MESS5-MMS
TP-15	TP-020016	051	-	Rel-5	Reply-charging bug fixes	F	5.1.0	5.2.0	T2-020215	MESS5-MMS
TP-15	TP-020016	052	-	Rel-5	Support of Reply-Charging in MM7	B	5.1.0	5.2.0	T2-020219	MESS5-MMS

TP-15	TP-020016	053	-	Rel-5	VASP-related CDR generation	B	5.1.0	5.2.0	T2-020261	MESS5-MMS
TP-15	TP-020016	054	-	Rel-5	Persistent Networked-Based Storage Functions	B	5.1.0	5.2.0	T2-020262	MESS5-MMS
TP-15	TP-020016	055	-	Rel-5	Functional Description and Abstract Messages for MM7 realization	B	5.1.0	5.2.0	T2-020263	MESS5-MMS
TP-15	TP-020016	056	-	Rel-5	MMS UA behaviour with respect to handling MMS parameters on the USIM	B	5.1.0	5.2.0	T2-020265	MESS5-MMS
TP-15	TP-020016	057	-	Rel-5	MM1 <-> MM4 header mapping	B	5.1.0	5.2.0	T2-020270	MESS5-MMS
TP-15	TP-020016	058	-	Rel-5	Editorial changes	D	5.1.0	5.2.0	T2-020271	MESS5-MMS
TP-15	TP-020016	059	-	Rel-5	Correction to Call Data Records definitions	F	5.1.0	5.2.0	T2-020272	MESS5-MMS
TP-15	TP-020016	060	-	Rel-5	MM1 addressing formats	C	5.1.0	5.2.0	T2-020297	MESS5-MMS
TP-15	TP-020016	061	-	Rel-5	Reference point MM8 to billing system	B	5.1.0	5.2.0	T2-020275	MESS5-MMS
TP-15	TP-020016	062	-	Rel-5	MM7 Addressing	B	5.1.0	5.2.0	T2-020277	MESS5-MMS
TP-15	TP-020016	063	-	Rel-5	Clarification about Streaming in MMS	F	5.1.0	5.2.0	T2-020278	MESS5-MMS
TP-15	TP-020016	064	-	Rel-5	Clarifications on responsibilities of MMS User Agent and MMS Relay/Server	F	5.1.0	5.2.0	T2-020279	MESS5-MMS
TP-16	TP-020105	065	-	Rel-5	Parameters for CDR creation related to VASP/VAS connectivity via MM7	F	5.2.0	5.3.0	T2-020511	MESS5-MMS
TP-16	TP-020105	066	-	Rel-5	Automatic Bearer Selection for MMS	B	5.2.0	5.3.0	T2-020586	MESS5-MMS
TP-16	TP-020105	067	-	Rel-5	Charged Party Indication on MM7	B	5.2.0	5.3.0	T2-020533	MESS5-MMS
TP-16	TP-020105	068	-	Rel-5	MM1 - MM7 and MM4 - MM7 header mapping	B	5.2.0	5.3.0	T2-020534	MESS5-MMS
TP-16	TP-020158	069	-	Rel-5	MM7 stage 3	B	5.2.0	5.3.0	T2-020587	MESS5-MMS
TP-16	TP-020105	070	-	Rel-5	Correction to MM7 Stage 2 on Address Visibility in Sender and Recipient IEs	F	5.2.0	5.3.0	T2-020536	MESS5-MMS
TP-16	TP-020105	073	-	Rel-5	Encapsulation of a short message (SMS) in a multimedia message (MMS)	A	5.2.0	5.3.0	T2-020550	MESS5-MMS
TP-16	TP-020105	074	-	Rel-5	MM1 and MM7 Interfaces: Message Distribution Indicator.	B	5.2.0	5.3.0	T2-020547	MESS5-MMS
TP-16	TP-020105	075	-	Rel-5	Consistent terminology	F	5.2.0	5.3.0	T2-020548	MESS5-MMS
TP-16	TP-020105	076	-	Rel-5	Clarification of Persistent Network-based Storage: Store Status and Store Status Text throughout MM1 Reference Point	F	5.2.0	5.3.0	T2-020549	MESS5-MMS
TP-16	TP-020105	077	-	Rel-5	Alignment of 3GPP TS 23.140 with 3GPP TS 26.140	F	5.2.0	5.3.0	T2-020551	MESS5-MMS
TP-16	TP-020105	078	-	Rel-5	Binary Encoding of MMS Connectivity Information for storage on the USIM	F	5.2.0	5.3.0	T2-020559	MESS5-MMS
TP-16	TP-020105	079	-	Rel-5	Additional information elements for the MM1 abstract messages.	F	5.2.0	5.3.0	T2-020560	MESS5-MMS
TP-16	TP-020105	080	-	Rel-5	Clarifications	F	5.2.0	5.3.0	T2-020563	MESS5-MMS
TP-16	TP-020105	081	-	Rel-5	Definition of Message Size in a CDR	F	5.2.0	5.3.0	T2-020564	MESS5-MMS
TP-16	TP-020105	082	-	Rel-5	Correction of incomplete/inconsistent MM4 interface responsibility allocation for delivery reports.	F	5.2.0	5.3.0	T2-020570	MESS5-MMS
TP-17	TP-020237	083	-	Rel-5	MMS UA behaviour with respect to handling MMS notification parameters stored on the USIM	F	5.3.0	5.4.0	T2-020773	MESS5-MMS
TP-17	TP-020237	085	-	Rel-5	Correction of MM7 Schema	F	5.3.0	5.4.0	T2-020724	MESS5-MMS
TP-17	TP-020237	086	-	Rel-5	Reference Update	F	5.3.0	5.4.0	T2-020734	MESS5-MMS
TP-17	TP-020237	087	-	Rel-5	MMS UA behaviour for handling number of MMS connectivity parameters sets on the USIM	F	5.3.0	5.4.0	T2-020735	MESS5-MMS
TP-17	TP-020237	088	-	Rel-5	Corrections for MM7 submit request/response examples	F	5.3.0	5.4.0	T2-020737	MESS5-MMS
TP-17	TP-020237	089	-	Rel-5	Binary Encoding of MMS User Preferences for Storage on the USIM	F	5.3.0	5.4.0	T2-020749	MESS5-MMS
TP-17	TP-020237	090	-	Rel-5	Corrections towards MM7 Stage 3 examples	F	5.3.0	5.4.0	T2-020766	MESS5-MMS
TP-17	TP-020237	091	-	Rel-5	Changes to the support of MAP operations for recipient MSISDN address resolution based on IMSI.	F	5.3.0	5.4.0	T2-020809	MESS5-MMS
TP-17	TP-020237	092	-	Rel-5	Acknowledgements for unconfirmed transactions	F	5.3.0	5.4.0	T2-020795	MESS5-MMS
TP-17	TP-020237	093	-	Rel-5	Time stamp definition and time clarification	F	5.3.0	5.4.0	T2-020797	MESS5-MMS
TP-18	TP-020273	094	-	Rel-5	MMS message size definition and its support on the MMS UA.	F	5.4.0	5.5.0	T2-020943	MESS5-MMS
TP-18	TP-020321	095	1	Rel-5	MMS UA behaviour regarding the MMS parameters on the (U)SIM	F	5.4.0	5.5.0	-	MESS5-MMS
TP-18	TP-020273	096	-	Rel-5	Further corrections towards the MM7 XML Schema and MM7 examples	F	5.4.0	5.5.0	T2-020952	MESS5-MMS
TP-18	TP-020273	097	-	Rel-6	Version Handling on MM4	C	5.4.0	6.0.0	T2-020955	MMS6
TP-18	TP-020273	098	-	Rel-6	Addition of support for “Bcc” field in the MM4 reference point	F	5.4.0	6.0.0	T2-020957	MMS6
TP-19	TP-030039	101	-	Rel-6	Transferring distribution indicator as part of message retrieval	A	6.0.0	6.1.0	T2-030186	MMS6

TP-19	TP-030039	104	-	Rel-6	Conditional Usage of the Message-ID in MM1_Retrieve.RES	A	6.0.0	6.1.0	T2-030122	MMS6
TP-19	TP-030039	105	-	Rel-6	Recipient Handling on MM4	C	6.0.0	6.1.0	T2-030068	MMS6
TP-19	TP-030039	109	-	Rel-6	MM1 MMBox View Clarifications	A	6.0.0	6.1.0	T2-030125	MMS6
TP-19	TP-030039	112	-	Rel-6	MM4_Read_reply_report processing refers to an incorrect message	A	6.0.0	6.1.0	T2-030131	MMS6
TP-19	TP-030039	114	-	Rel-6	Addition of missing field in table K6	A	6.0.0	6.1.0	T2-030133	MMS6
TP-19	TP-030039	116	-	Rel-6	Correcting definition of MM7 Version	A	6.0.0	6.1.0	T2-030194	MMS6
TP-20	TP-030115	119	-	Rel-6	Updating references	A	6.1.0	6.2.0	T2-030327	MMS6
TP-20	TP-030115	120	-	Rel-6	Support for DRM in MMS	B	6.1.0	6.2.0	T2-030357	MMS6
TP-20	TP-030115	121	-	Rel-6	Extension of the X-Mms-MM-Status-Code “reject”, in the MM4_Delivery_report.REQ (CR)	B	6.1.0	6.2.0	T2-030337	MMS6
TP-20	TP-030115	122	-	Rel-6	Addition of IEs that currently exist in MM1/MM4 but not in MM7	B	6.1.0	6.2.0	T2-030338	MMS6
TP-20	TP-030115	123	-	Rel-6	Over the air provisioning in MMS	B	6.1.0	6.2.0	T2-030339	MMS6
TP-20	TP-030115	124	-	Rel-6	Addition of information regarding encrypted or obfuscated address in MM7	B	6.1.0	6.2.0	T2-030340	MMS6
TP-20	TP-030115	125	-	Rel-6	Addition of Service Provider Identification to the MM7 reference point	B	6.1.0	6.2.0	T2-030341	MMS6
TP-20	TP-030115	126	-	Rel-6	Charged Party ID (CR)	B	6.1.0	6.2.0	T2-030344	MMS
TP-20	TP-030115	127	-	Rel-6	Correction of RFC 2821 reference	A	6.1.0	6.2.0	T2-030347	MMS6
TP-21	TP-030174	130	-	Rel-6	Invalid MM7 references	F	6.2.0	6.3.0	T2-030451	MMS6
TP-21	TP-030174	131	-	Rel-6	Enhancements to DRM support in MMS	B	6.2.0	6.3.0	T2-030473	MMS6
TP-21	TP-030174	132	-	Rel-6	Clarity on USIM versus Over the air provisioning in MMS	C	6.2.0	6.3.0	T2-030474	MMS6
TP-21	TP-030174	133	-	Rel-6	Inaccuracies in Annexes I & K	F	6.2.0	6.3.0	T2-030532	MMS6
TP-21	TP-030174	134	-	Rel-6	Size in Retrieval request	C	6.2.0	6.3.0	T2-030490	MMS6
TP-21	TP-030174	135	-	Rel-6	Transfer over MM3	C	6.2.0	6.3.0	T2-030533	MMS6
TP-21	TP-030174	136	-	Rel-6	Extension of MM4 interface for delivery report	B	6.2.0	6.3.0	T2-030534	MMS6
TP-21	TP-030174	137	-	Rel-6	Reply charging in case of forwarding	B	6.2.0	6.3.0	T2-030499	MMS6
TP-21	TP-030174	138	-	Rel-6	Addition of Information elements to MM7	B	6.2.0	6.3.0	T2-030504	MMS6
TP-22	TP-030268	140	-	Rel-6	Correction in MM1-MM4/MM7 header mapping	F	6.3.0	6.4.0	T2-030587	MMS6
TP-22	TP-030268	141	-	Rel-6	Clarifying the Element of Information “Linked ID”	F	6.3.0	6.4.0	T2-030624	MMS6
TP-22	TP-030268	142	-	Rel-6	Cleaning up last references to RFC822, and deletion of non existing /TYPE=rfc822	F	6.3.0	6.4.0	T2-030625	MMS6
TP-22	TP-030268	143	-	Rel-6	Conditional delivery mechanism for MMS	B	6.3.0	6.4.0	T2-030629	MMS6
TP-22	TP-030268	144	-	Rel-6	Automatic and Manual Retrieval Modes	F	6.3.0	6.4.0	T2-030630	MMS6
TP-22	TP-030268	145	-	Rel-6	MM4 addressing	F	6.3.0	6.4.0	T2-030631	MMS6
TP-22	TP-030268	146	-	Rel-6	Addition of missing MM7 Delivery report status codes	F	6.3.0	6.4.0	T2-030635	MMS6
TP-22	TP-030268	147	-	Rel-6	MM7, Allow Adaptations default value	F	6.3.0	6.4.0	T2-030636	MMS6
TP-23	TP-040050	149	-	Rel-6	On the handling of MM7 messages composed with different XML schema	F	6.4.0	6.5.0	T2-040054	MMS6
TP-23	TP-040050	151	-	Rel-6	Correction of the MM7 Schema, change “TimeStamp” to “date”	F	6.4.0	6.5.0	T2-040141	MMS6
TP-23	TP-040050	152	-	Rel-6	MM7 – Charged party, third party value	F	6.4.0	6.5.0	T2-040142	MMS6
TP-23	TP-040050	153	-	Rel-6	MMS Online Charging	B	6.4.0	6.5.0	T2-040128	MMS6
TP-23	TP-040050	154	-	Rel-6	Updates to Annex M (Delivery Report Generation)	F	6.4.0	6.5.0	T2-040129	MMS6
TP-23	TP-040050	155	-	Rel-6	Content of RCPT in MM4	F	6.4.0	6.5.0	T2-040130	MMS6
TP-23	TP-040050	156	-	Rel-6	Management of Hyperlinks in MMS	B	6.4.0	6.5.0	T2-040132	MMS6
TP-24	TP-040095	158		Rel-6	Addition of recipient list to MM4_Forward.RES	B	6.5.0	6.6.0	T2-040258	MMS6
TP-24	TP-040095	159		Rel-6	Correcting “X-Mms-Read-Status” erroneous mapping on Annex I	F	6.5.0	6.6.0	T2-040257	MMS6
TP-24	TP-040095	161		Rel-6	Changing erroneous OMA references from MMS1.1 to MMS1.2	F	6.5.0	6.6.0	T2-040237	MMS6
TP-24	TP-040095	162		Rel-6	MM7 delivery conditions for MMS	B	6.5.0	6.6.0	T2-040260	MMS6
TP-24	TP-040095	163		Rel-6	Size indication by MMS UA	C	6.5.0	6.6.0	T2-040243	MMS6
TP-25	TP-040172	164		Rel-6	Deletion of annex K.6	F	6.6.0	6.7.0	T2-040359	MMS6
TP-25	TP-040172	165		Rel-6	Clarification about WAP-based and IP-based MM1 implementations	F	6.6.0	6.7.0	T2-040342	MMS6
TP-25	TP-040172	166		Rel-6	Introducing Application Addressing in MMS	B	6.6.0	6.7.0	T2-040347	MMS6
TP-25	TP-040172	167		Rel-6	Adding status text in the MM1 Delivery Report	C	6.6.0	6.7.0	T2-040355	MMS6

TP-25	TP-040172	168		Rel-6	Indication about Content Adaptation	C	6.6.0	6.7.0	T2-040356	MMS6
TP-25	TP-040172	169		Rel-6	Clarification of interpretation of value “No” in Information Element “Forward to Originator UA” in the MM4 Delivery Report Forwarding	C	6.6.0	6.7.0	T2-040358	MMS6
TP-25	TP-040172	170		Rel-6	Clarification of MM4_Forward.RES covering partial status information.	C	6.6.0	6.7.0	T2-040362	MMS6
TP-25	TP-040172	171		Rel-6	Support for multiple and single recipients on MM4	C	6.6.0	6.7.0	T2-040352	MMS6
TP-25	TP-040172	172		Rel-6	Adding the Information Elements VASID and VASPID to the MM7_Deliver.REQ	B	6.6.0	6.7.0	T2-040354	MMS6
TP-25	TP-040172	173		Rel-6	Support of Messaging Service Control Function (MSCF)	B	6.6.0	6.7.0	T2-040369	MMS6
TP-25	TP-040172	174		Rel-6	Additional DRM Requirements to the MMS Relay Server	B	6.6.0	6.7.0	T2-040357	MMS6
TP-26	TP-040226	175		Rel-6	Adding collision prevention mechanism to application addressing	C	6.7.0	6.8.0	T2-040455	MMS6
TP-26	TP-040226	176		Rel-6	Precision for the recipient entities' behaviour upon reception of an abstract message containing a destination application identifier	F	6.7.0	6.8.0	T2-040411	MMS6
TP-26	TP-040226	177		Rel-6	Replacing and Cancelling Multimedia Message in Recipient Terminal	B	6.7.0	6.8.0	T2-040447	MMS6
TP-26	TP-040226	178		Rel-6	Information about Content to Recipient Terminal	B	6.7.0	6.8.0	T2-040450	MMS6
TP-26	TP-040226	179		Rel-6	Truncating the “subject” element of an MM1_notification.REQ for adopting to carrier layer limitations and decreasing the response delay	F	6.7.0	6.8.0	T2-040463	MMS6
TP-26	TP-040226	180		Rel-6	Clarifying that the terminal hosting Application(s) identifies its capabilities in a binary way	F	6.7.0	6.8.0	T2-040460	MMS6
TP-26	TP-040226	181		Rel-6	Deletion of deferred MMs from the MMS Relay/Server	B	6.7.0	6.8.0	T2-040457	MMS6
TP-26	TP-040226	182		Rel-6	Resolving DNS to an IP address using procedures of RFC2821	B	6.7.0	6.8.0	T2-040449	MMS6
TP-26	TP-040226	183		Rel-6	MM4 _forward.REQ counter definition	F	6.7.0	6.8.0	T2-040459	MMS6
TP-26	TP-040226	184		Rel-6	Adding Recipient handset capabilities in the MM7_delivery_report.REQ and MM7_deliver.REQ transactions	B	6.7.0	6.8.0	T2-040445	MMS6
TP-26	TP-040226	185		Rel-6	Additional Error situation in MM7_Deliver.RES	B	6.7.0	6.8.0	T2-040426	MMS6
TP-26	TP-040226	186		Rel-6	Allow more than one DeliveryCondition at a time	C	6.7.0	6.8.0	T2-040446	MMS6
TP-26	TP-040226	187		Rel-6	Clarification of schema versioning	F	6.7.0	6.8.0	T2-040441	MMS6
TP-26	TP-040226	188		Rel-6	Error Status Codes related to Application Addressing over MM7	B	6.7.0	6.8.0	T2-040442	MMS6
TP-26	TP-040226	189		Rel-6	Rapporteur’s check of 23.140	F	6.7.0	6.8.0	T2-040391	MMS6
TP-26	TP-040226	190		Rel-6	Addition of roaming detection and MMS capability detection as part of functionalities of the MMS Relay/Server	F	6.7.0	6.8.0	T2-040419	MMS6
TP-26	TP-040226	191		Rel-6	Correct a typo, in Information Element Applic-ID (MM7_Deliver.REQ)	D	6.7.0	6.8.0	T2-040383	MMS6
TP-26	TP-040226	192		Rel-6	Editorial Modifications in section 7.2.3 Address Formats on MM7	D	6.7.0	6.8.0	T2-040462	MMS6
TP-26	TP-040226	193		Rel-6	Stage 3 MM7 Schema, addition of application, contentclass, drmcontent, vasp id, extended cancel/replace, deliverycondition and uacapabilities elements.	B	6.7.0	6.8.0	T2-040443	MMS6
TP-26	TP-040226	194		Rel-6	Collective Changes to improve the MM4 interface	C	6.7.0	6.8.0	T2-040470	MMS6
TP-26	TP-040226	195		Rel-6	Adding the Information Elements VAS-ID and VASP-ID in MM7_DeliveryReport and MM7_ReadReplyReport.	B	6.7.0	6.8.0	T2-040444	MMS6
TP-27	TP-050050	196		Rel-6	Definition of the notification procedure for MM addressed to the USIM	B	6.8.0	6.9.0	T2-050031	MMS6
TP-27	TP-050050	197		Rel-6	Correcting Extended Canceling and Replacing	F	6.8.0	6.9.0	T2-050037	MMS6