US006084528A

# United States Patent [19]

**Beach et al.**

[11] **Patent Number: 6,084,528**

[45] **Date of Patent: Jul. 4, 2000**

[54] **INTRANET SCANNING TERMINAL SYSTEM**

[75] Inventors: **Robert Beach**, Los Altos, Calif.; **William X. Tracy**, Floral Park; **Thomas K. Roslak**, Eastport, both of N.Y.; **John Klein**, Morgan Hill, Calif.

[73] Assignee: **Symbol Technologies, Inc.**, Holtsville, N.Y.

[21] Appl. No.: **08/780,023**

[22] Filed: **Dec. 20, 1996**

**Related U.S. Application Data**

[63] Continuation-in-part of application No. 08/706,579, Sep. 5, 1996, Pat. No. 5,825,002.

[51] **Int. Cl.**[7] ..... **G06F 7/04**

[52] **U.S. Cl.** ..... **340/825.35**; 235/383; 379/93.05; 707/10

[58] **Field of Search** ..... 235/383, 385, 235/472.01, 472.02, 472.03, 462.01, 462.09, 462.1, 462.45, 462.46, 462.49; 707/10; 395/200.48, 200.47, 200.49; 340/825.72; 379/93.05, 93.12, 93.23, 93.25, 106.01; 455/566, 95; 375/200; 370/310, 912, 913; 1/1

[56] **References Cited**

U.S. PATENT DOCUMENTS

| | | | |
|---|---|---|---|
| 4,628,193 | 12/1986 | Blum | 235/375 |
| 4,916,441 | 4/1990 | Gombrich | 235/462.45 X |
| 5,186,281 | 2/1993 | Jenkins | 186/55 |
| 5,280,159 | 1/1994 | Schultz et al. | 235/462.46 X |
| 5,309,351 | 5/1994 | McCain et al. | 340/825.72 X |
| 5,310,997 | 5/1994 | Roach et al. | 235/375 |
| 5,334,821 | 8/1994 | Campo et al. | 235/380 |
| 5,345,071 | 9/1994 | Dumont | 235/383 |
| 5,397,882 | 3/1995 | Van Solt | 235/381 |
| 5,410,326 | 4/1995 | Goldstein | 340/825.72 X |
| 5,434,394 | 7/1995 | Roach et al. | 235/375 |
| 5,448,471 | 9/1995 | Deaton et al. | 364/401 |
| 5,468,942 | 11/1995 | Oosterveen et al. | 235/383 |
| 5,541,398 | 7/1996 | Hanson | 235/462.46 |
| 5,557,088 | 9/1996 | Shimizu et al. | 235/383 |
| 5,567,925 | 10/1996 | Koenck et al. | 235/462.46 X |
| 5,594,228 | 1/1997 | Swartz et al. | 235/383 |
| 5,661,632 | 8/1997 | Register | 361/681 X |
| 5,671,436 | 9/1997 | Morris et al. | 707/10 |
| 5,672,860 | 9/1997 | Miller et al. | 235/472.01 |
| 5,679,943 | 10/1997 | Schultz et al. | 235/472.02 |
| 5,721,421 | 2/1998 | Vandonkelaar | 235/462.15 |
| 5,747,786 | 5/1998 | Cargin, Jr. et al. | 235/462.46 |
| 5,821,513 | 10/1998 | O'Hagan et al. | 235/383 |
| 5,880,449 | 3/1999 | Teicher et al. | 235/383 |
| 5,898,162 | 4/1999 | Koenck et al. | 235/472.01 |

FOREIGN PATENT DOCUMENTS

| | | | |
|---|---|---|---|
| 619662A2 | 3/1994 | European Pat. Off. | H04L 12/28 |
| 697793A2 | 2/1996 | European Pat. Off. | H04N 7/15 |
| 744856A2 | 11/1996 | European Pat. Off. | H04M 3/42 |
| 9002296 | 10/1990 | Netherlands . | |
| WO90/16033 | 12/1990 | WIPO | G06F 15/20 |

OTHER PUBLICATIONS

The Wireless Store, The Strategic Environment for Retailing's Future (Symbol Technologies Brochure) Jan. 1992, p. 15.

*Primary Examiner*—Michael Horabik
*Assistant Examiner*—Anthony A. Asongwed

[57] **ABSTRACT**

An improved portable terminal system is described employing linked data files to present related information on a configurable display device. The portable terminal uses a machine coded reader to read machine coded data on an item and to register such information in a corresponding collection file. The system retrieves associated data files and presents such files in the form of a link if such information is determined to be non-essential. Thus, non-essential data may be presented as optional available data which may be accessed with a simple election command.

**2 Claims, 13 Drawing Sheets**

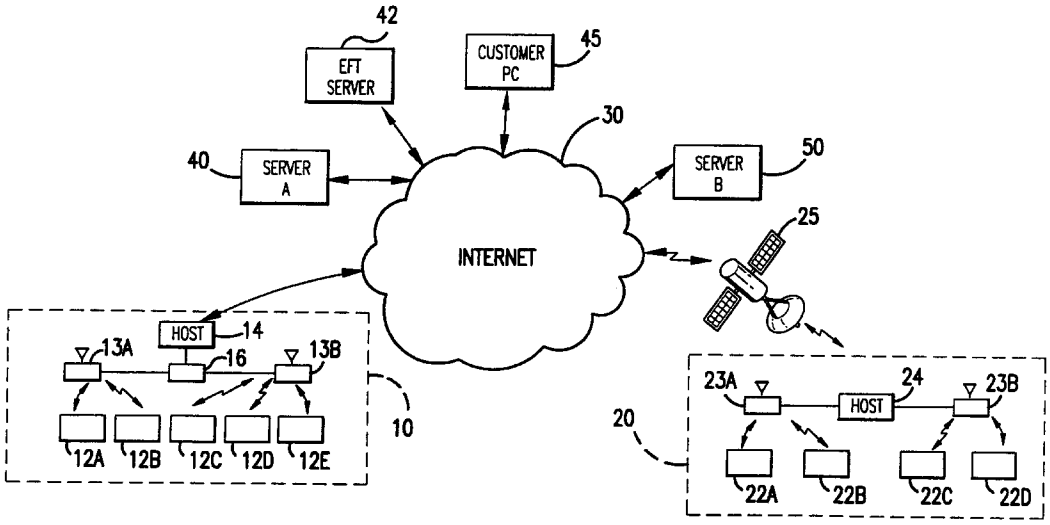

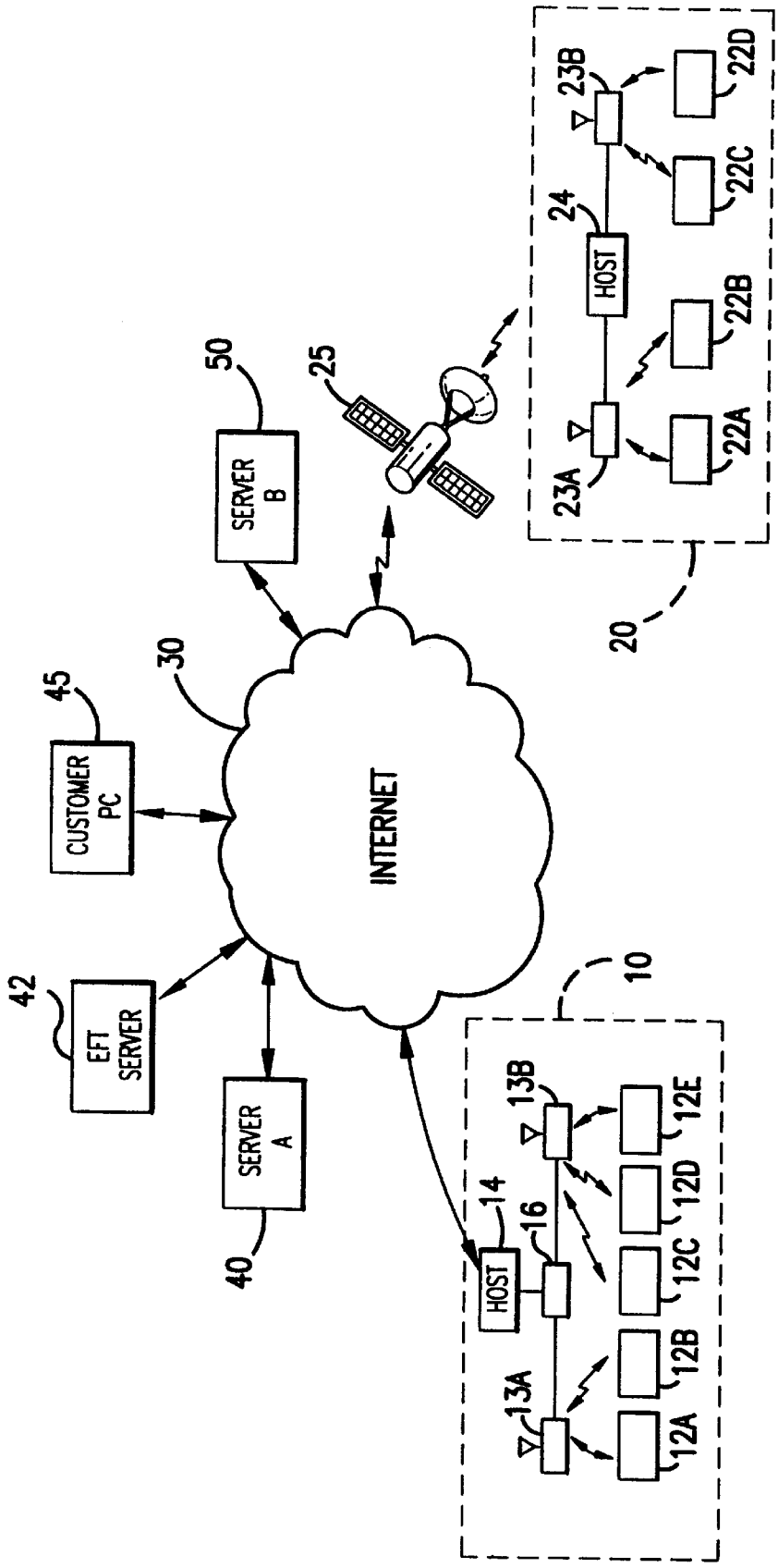
INTERNET
30
CUSTOMER PC
45
EFT SERVER
42
SERVER A
40
SERVER B
50
25
HOST
14
16
13A
13B
12A
12B
12C
12D
12E
10
HOST
24
23A
23B
22A
22B
22C
22D
20

FIG. 1

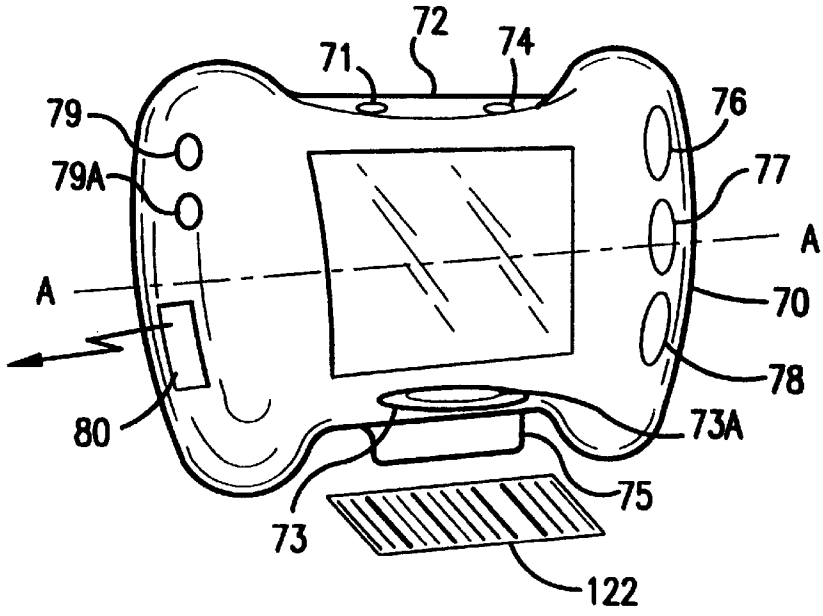
72
71
74
79
79A
76
77
A
A
70
78
80
73A
75
73
122

FIG.2

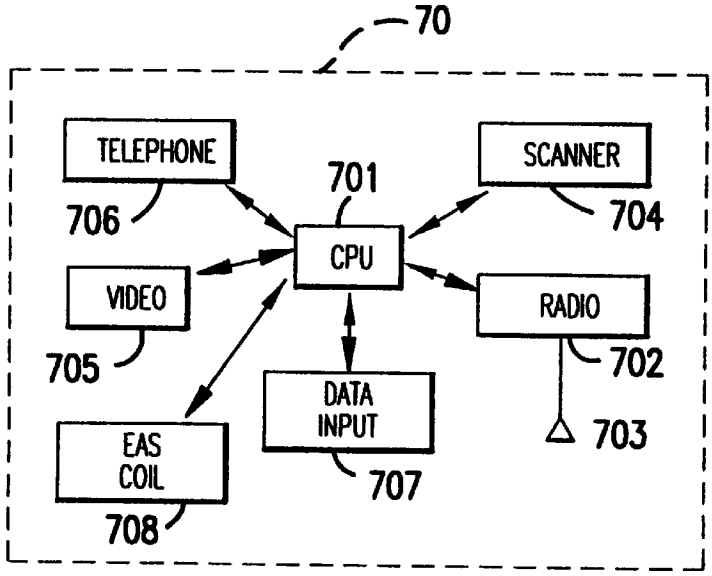
70
TELEPHONE
706
701
SCANNER
704
CPU
VIDEO
705
RADIO
702
DATA INPUT
707
703
EAS COIL
708

FIG.3

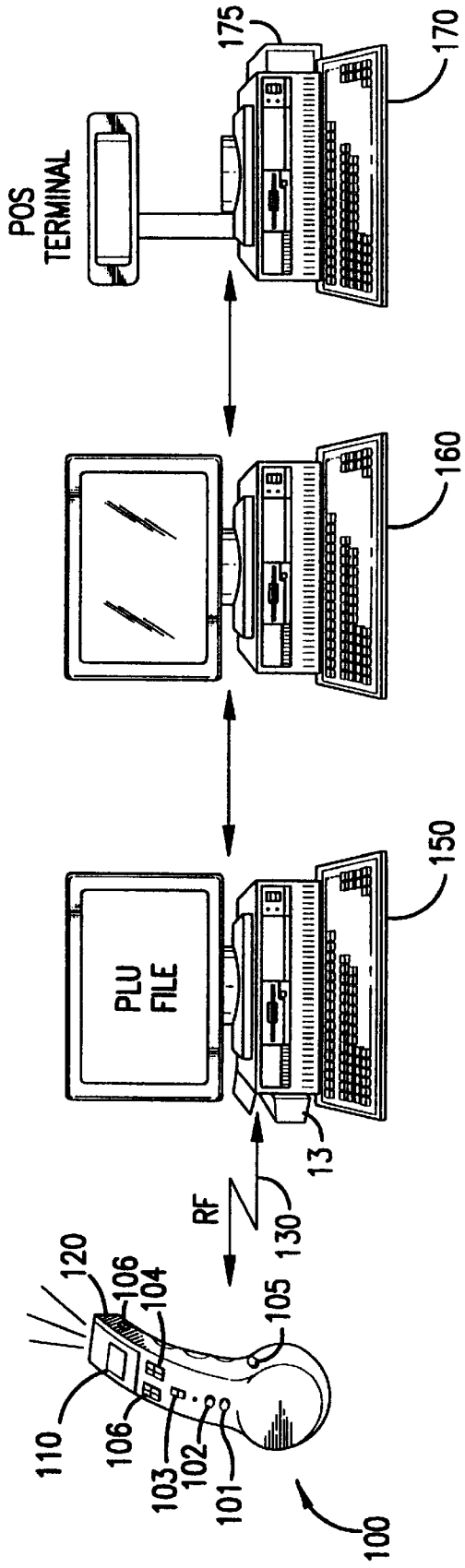
POS
TERMINAL
175
170
160
PLU
FILE
150
13
RF
130
120
106
104
105
110
106
103
102
101
100

FIG.4

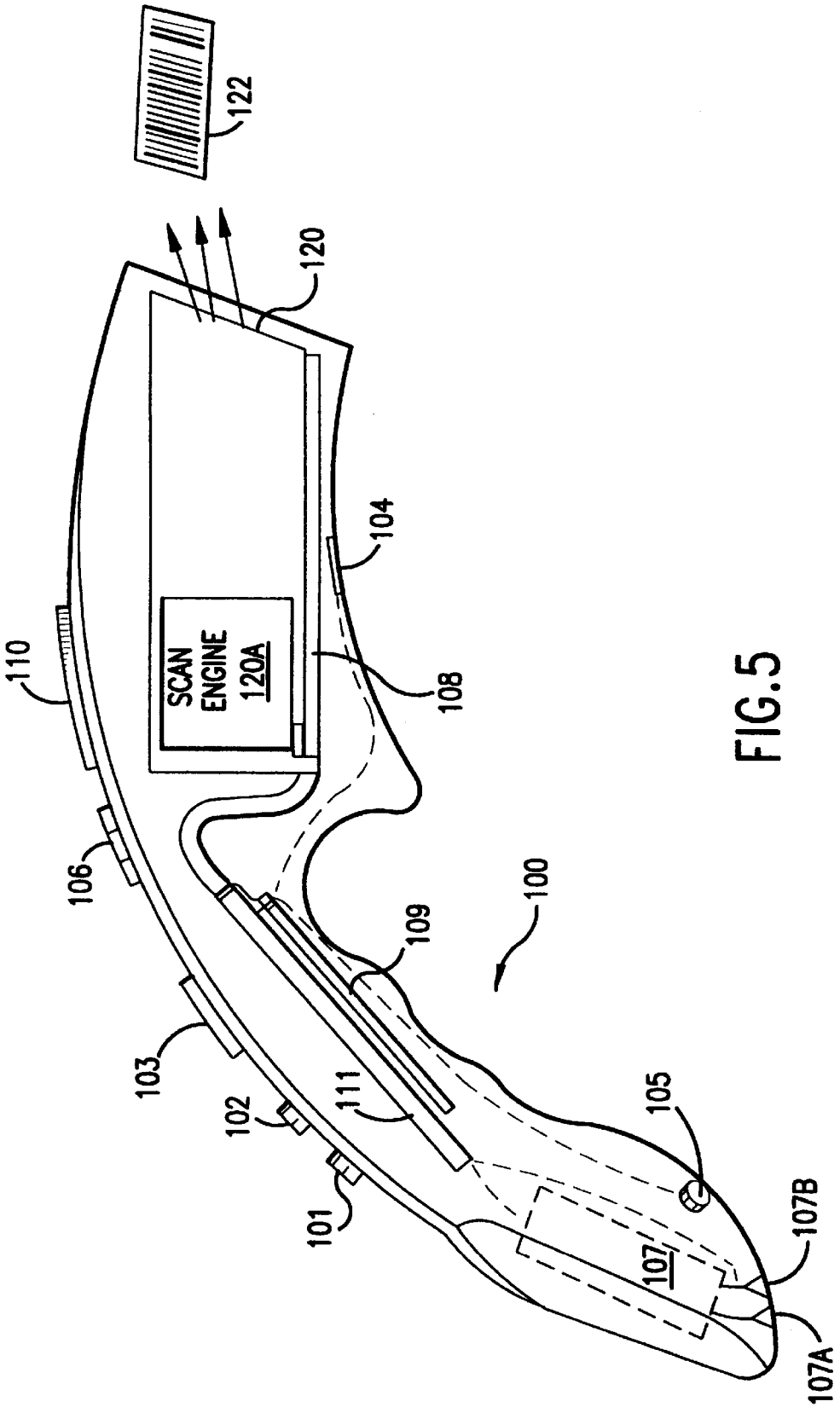
122
120
SCAN ENGINE 120A
104
108
110
106
100
109
103
111
102
105
101
107
107B
107A

FIG.5

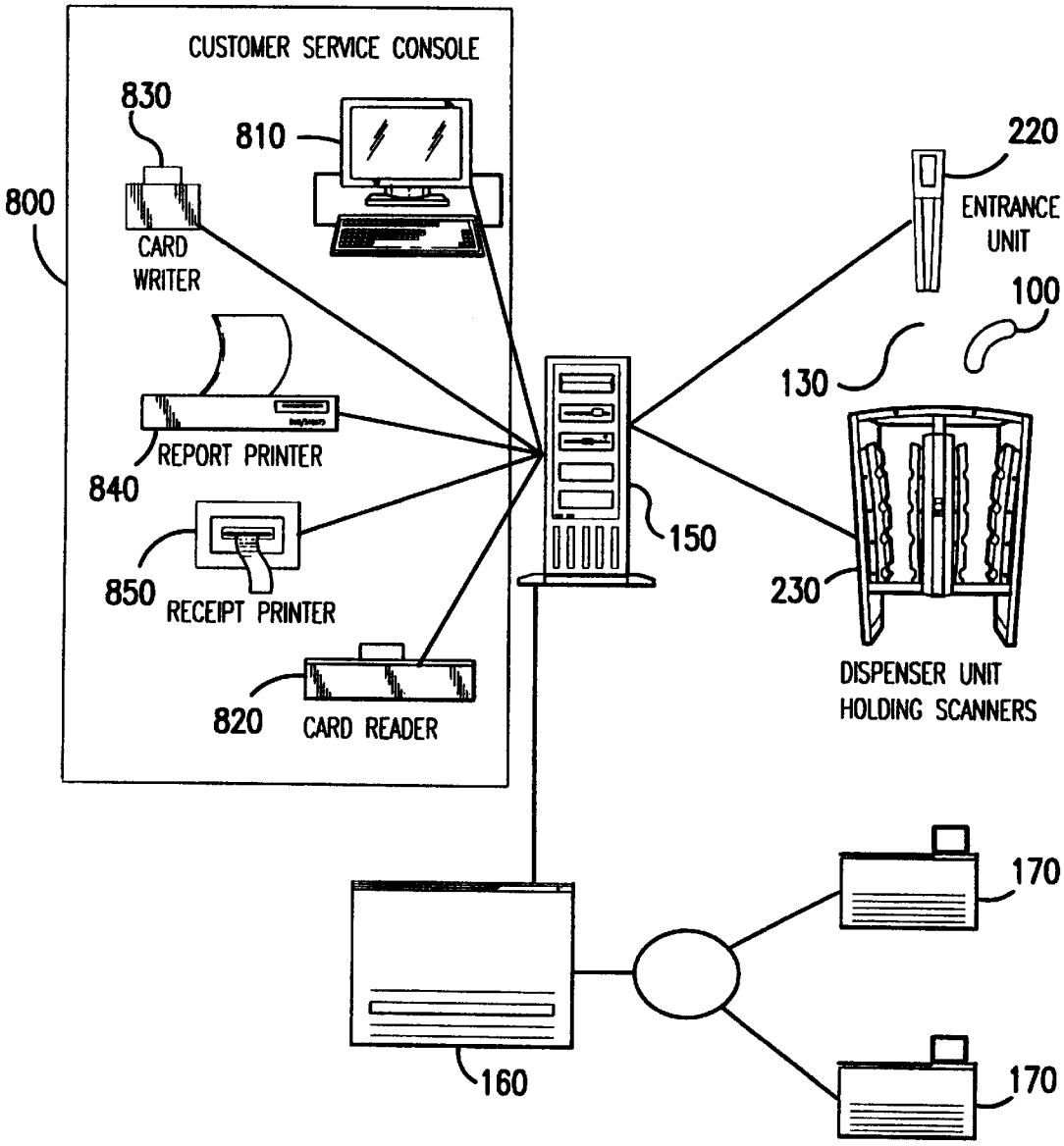
CUSTOMER SERVICE CONSOLE
830
810
800
CARD WRITER
REPORT PRINTER
840
850
RECEIPT PRINTER
820
CARD READER
220
ENTRANCE UNIT
100
130
150
230
DISPENSER UNIT HOLDING SCANNERS
170
160
170

FIG.6

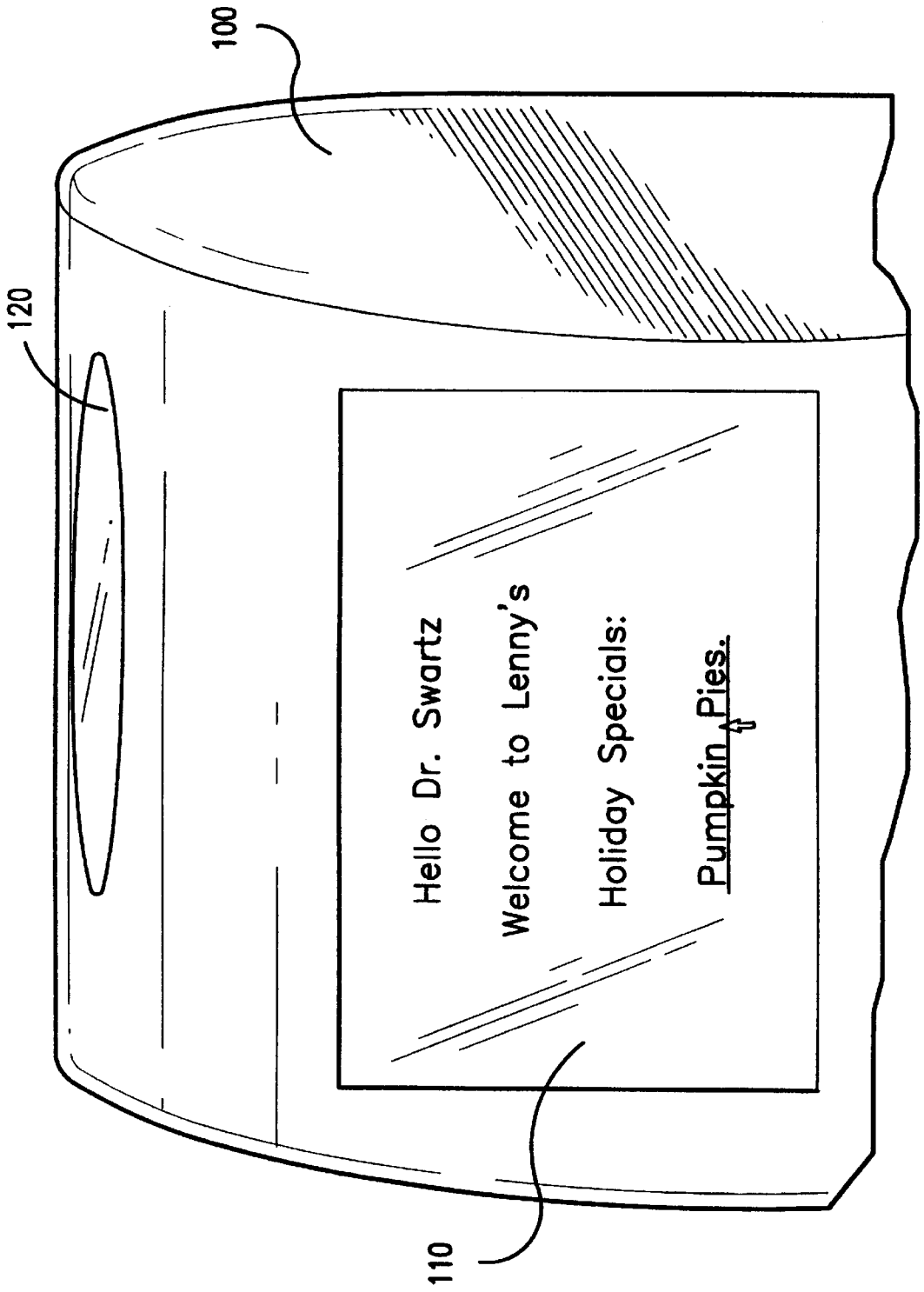
100
120
Hello Dr. Swartz
Welcome to Lenny's
Holiday Specials:
Pumpkin Pies.
110

FIG.7A

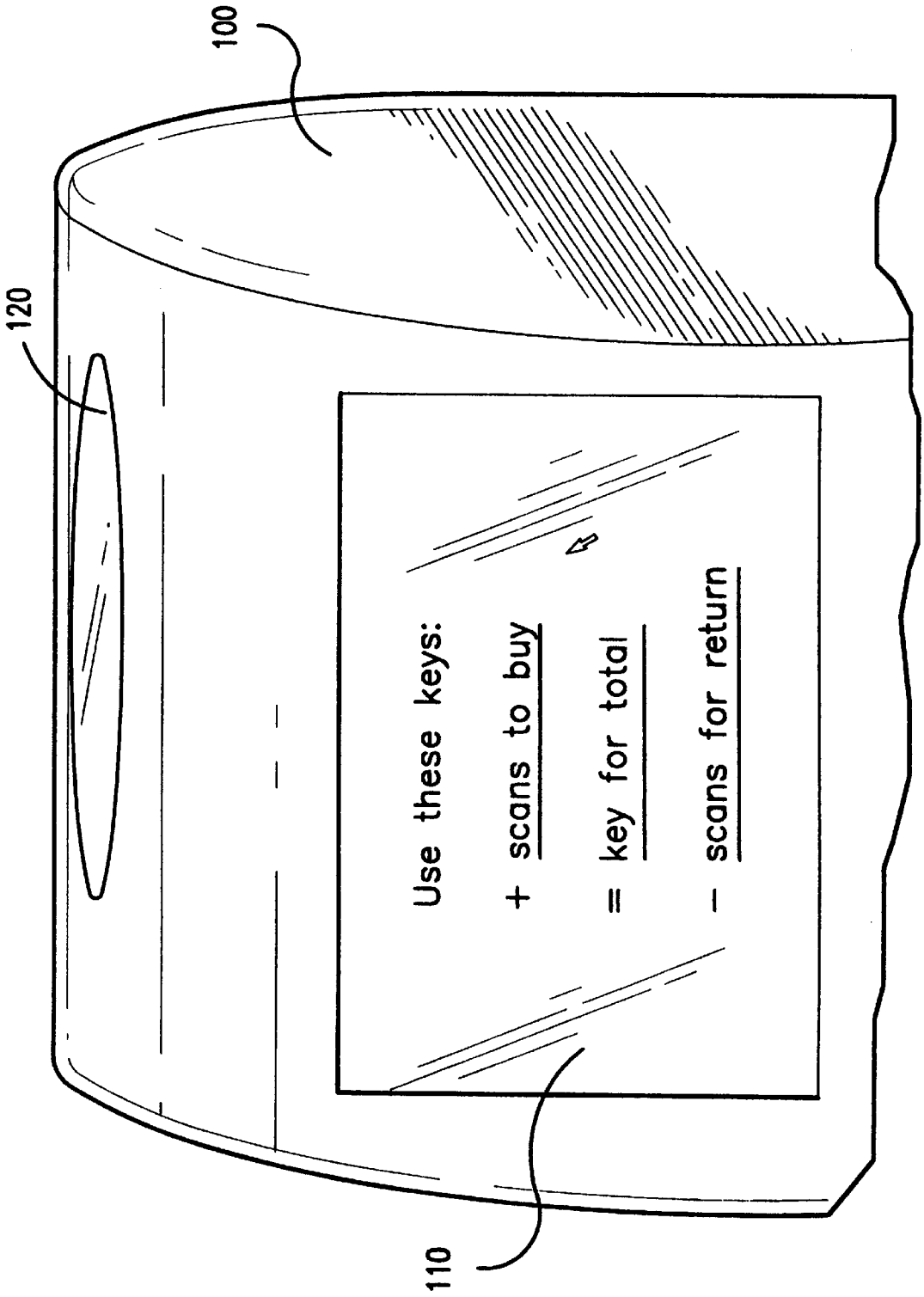
100
120
110
Use these keys:
+ scans to buy
= key for total
– scans for return

FIG.7B

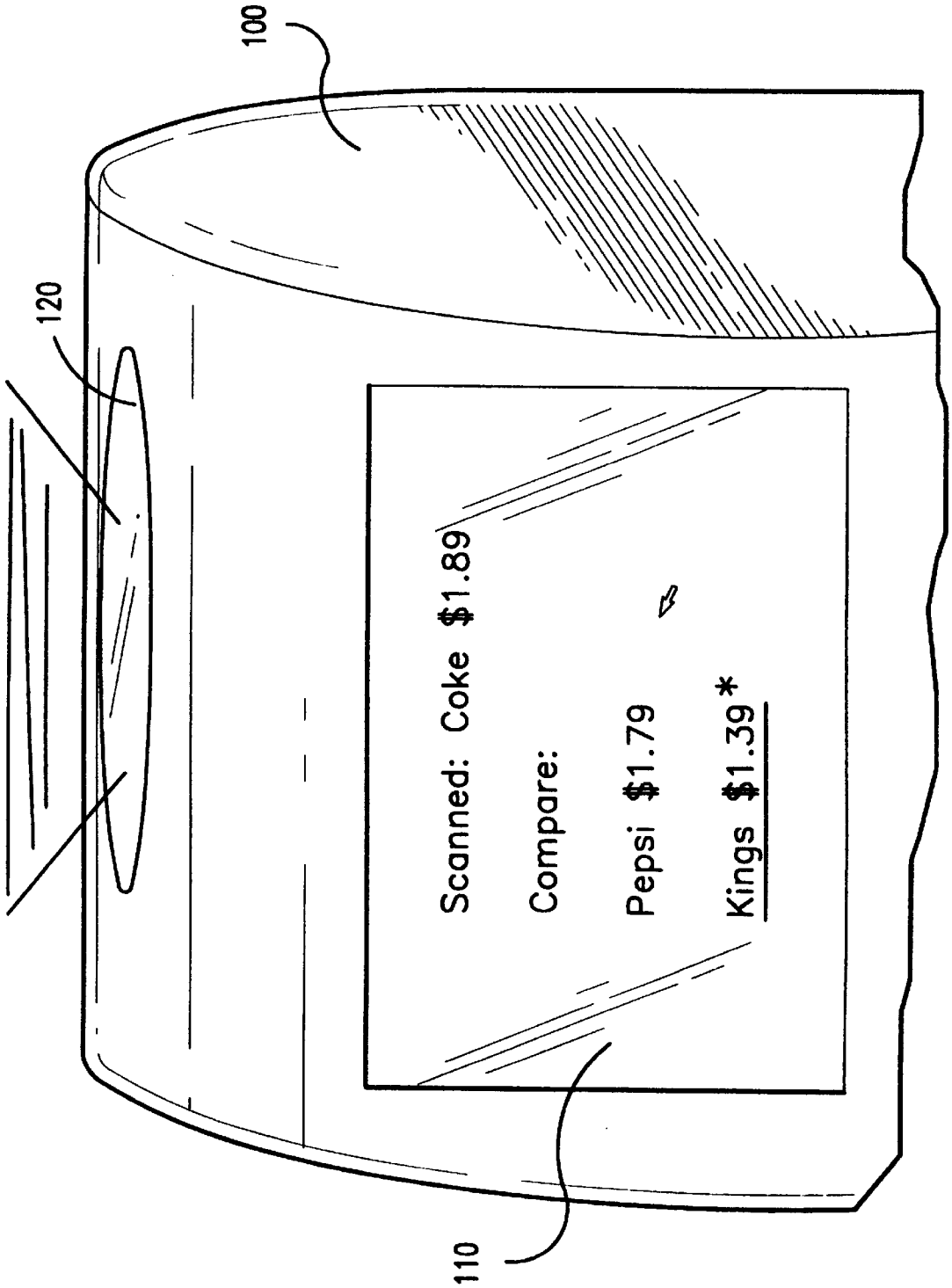


FIG.7C

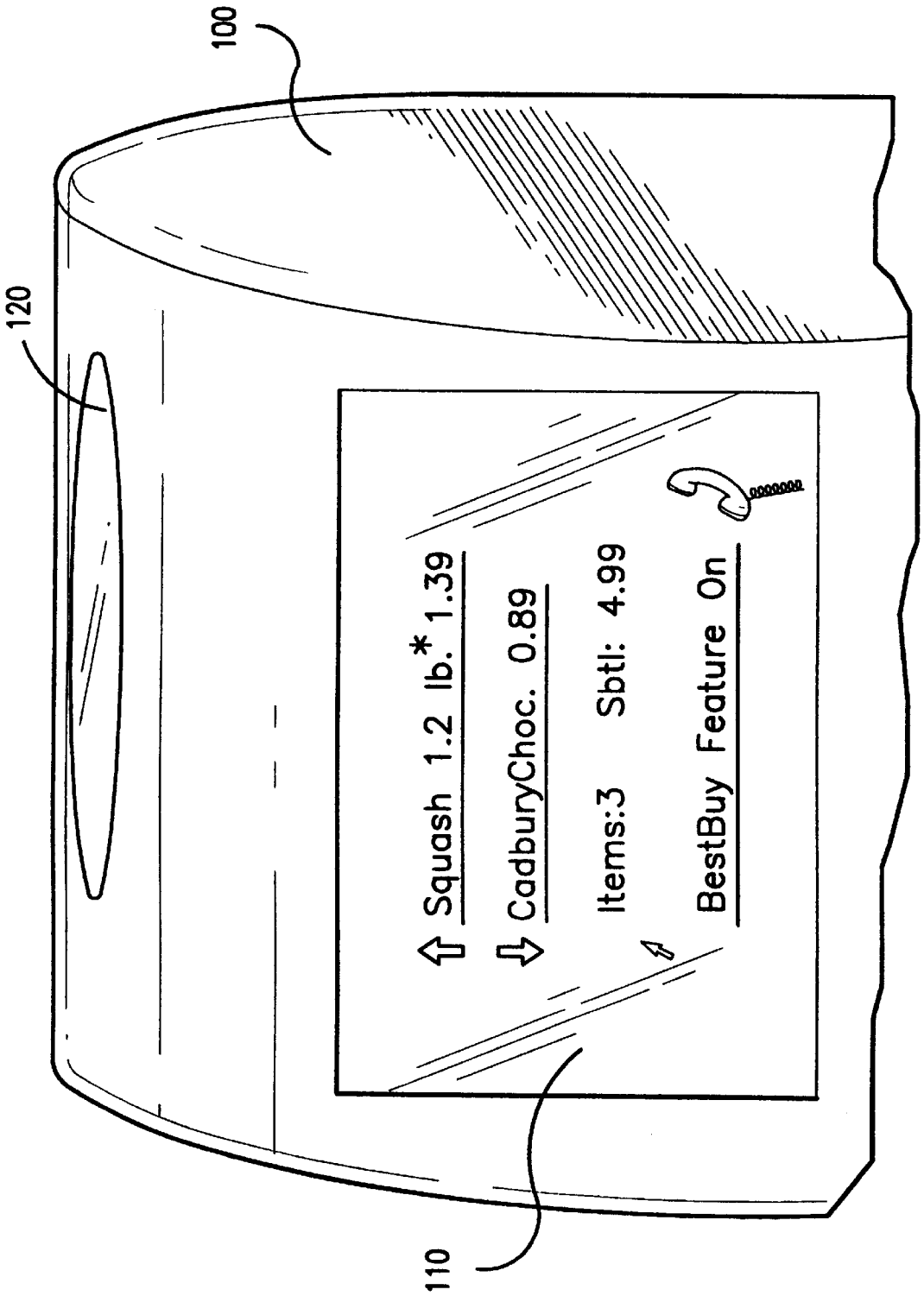
100
120
110
Squash 1.2 lb.* 1.39
CadburyChoc. 0.89
Items:3 Sbtl: 4.99
BestBuy Feature On

FIG.7D

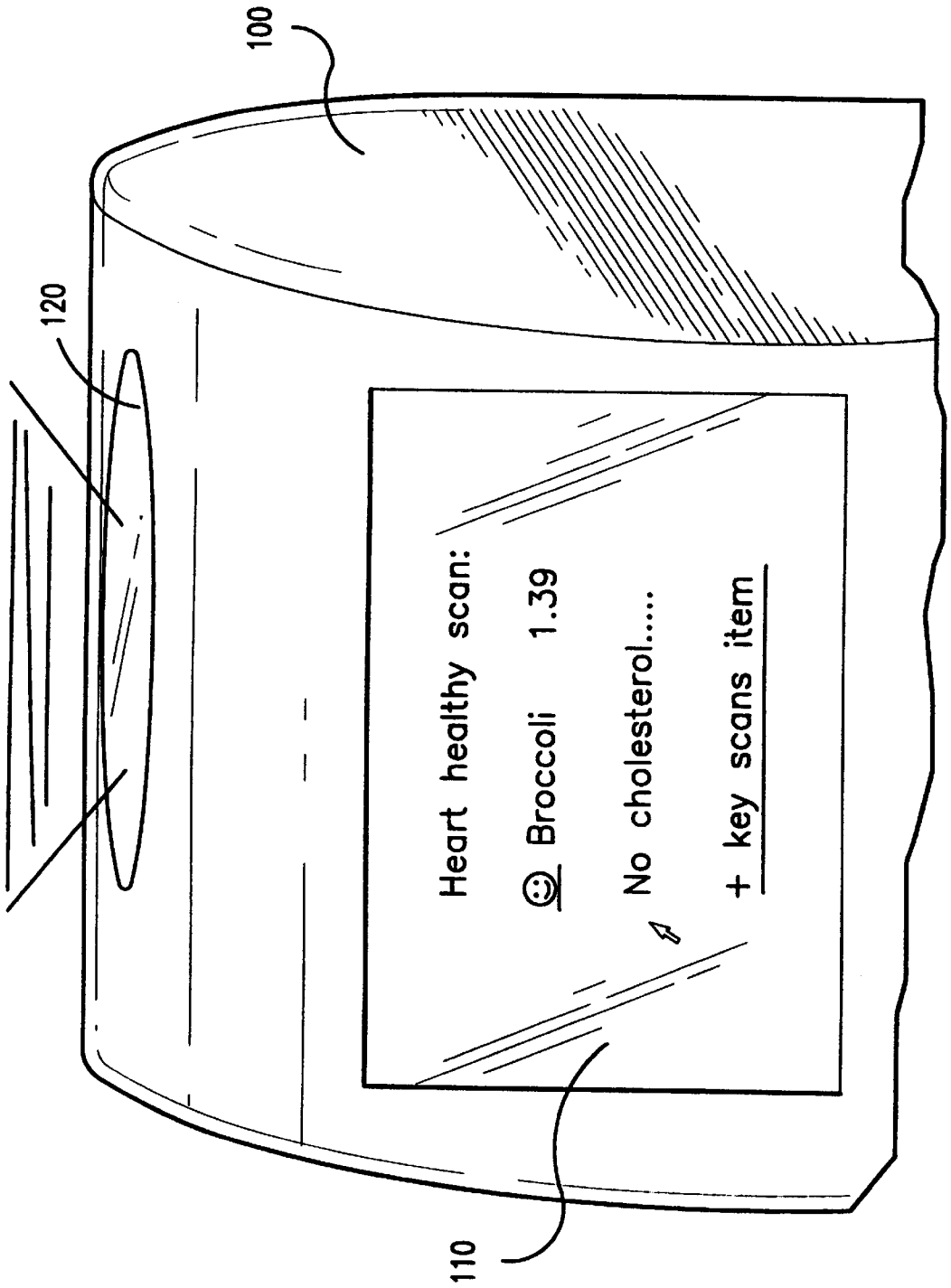
100
120
110
Heart healthy scan:
☺ Broccoli 1.39
No cholesterol.....
+ key scans item

FIG.7E

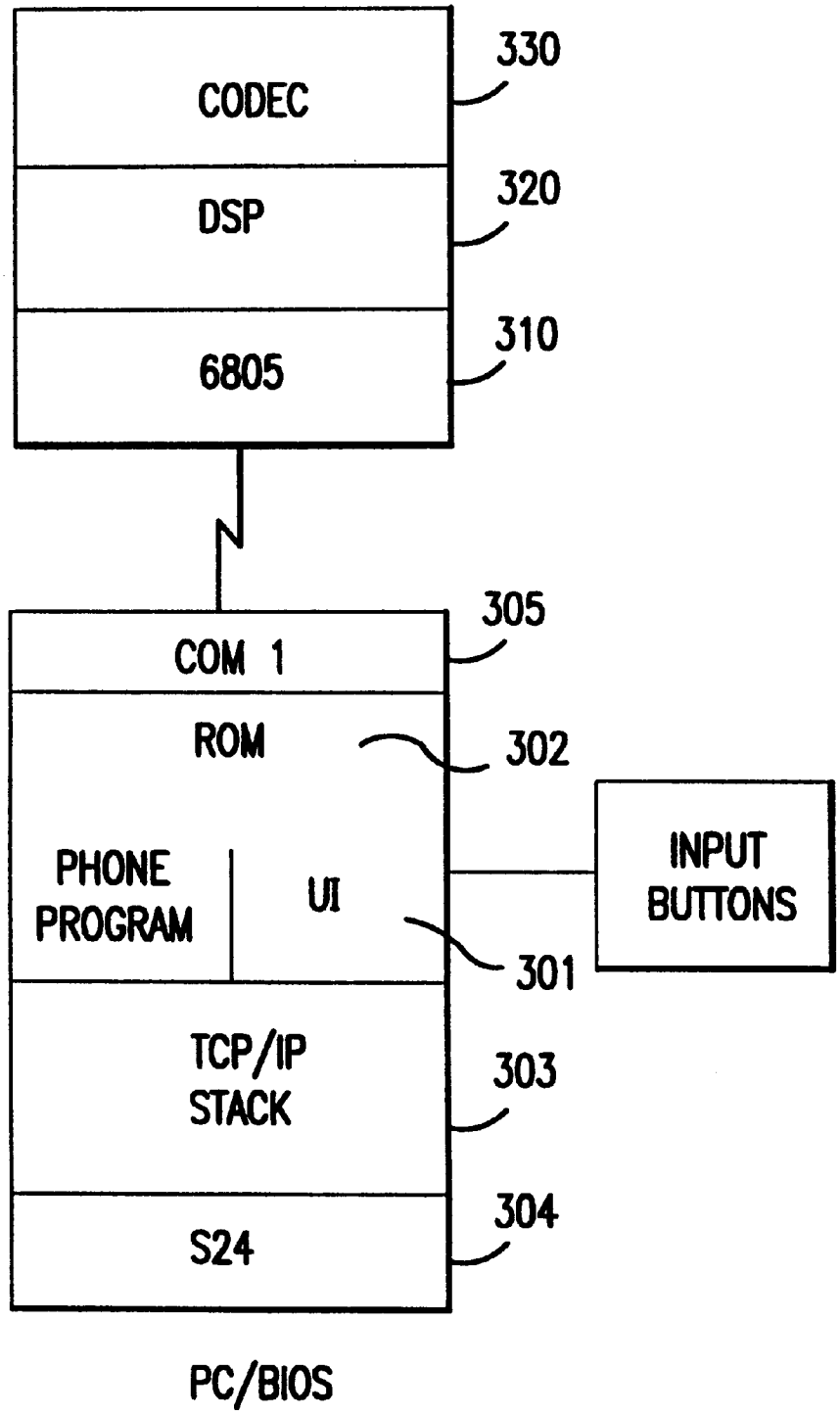
CODEC
330
DSP
320
6805
310
COM 1
305
ROM
302
PHONE PROGRAM
UI
301
INPUT BUTTONS
TCP/IP STACK
303
S24
304
PC/BIOS

FIG.8

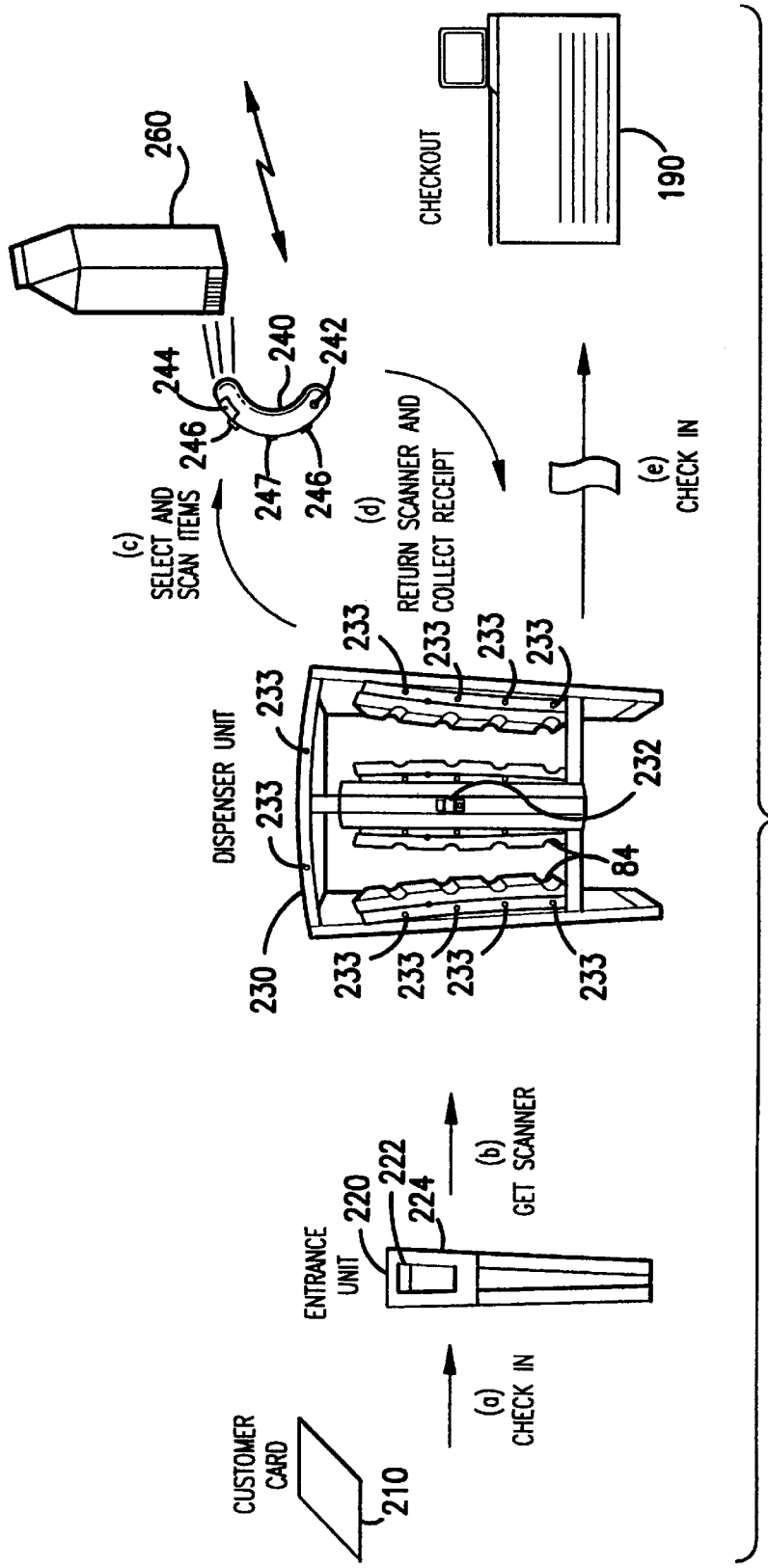
CUSTOMER CARD
210
(a) CHECK IN
ENTRANCE UNIT
220
222
224
(b) GET SCANNER
DISPENSER UNIT
230
233
232
84
(c) SELECT AND SCAN ITEMS
244
246
247
240
242
260
(d) RETURN SCANNER AND COLLECT RECEIPT
(e) CHECK IN
CHECKOUT
190

FIG.9

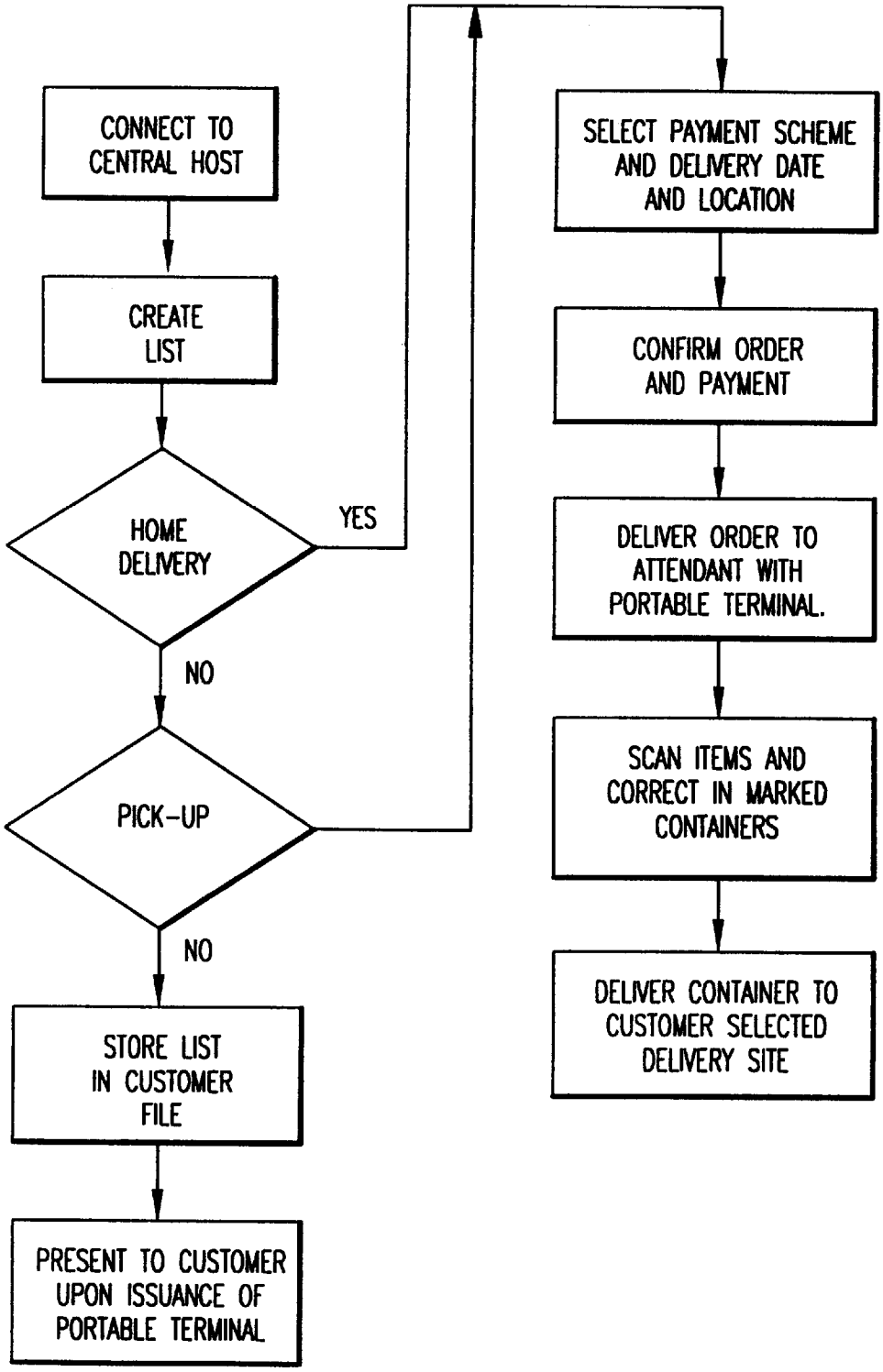
CONNECT TO CENTRAL HOST
CREATE LIST
HOME DELIVERY
YES
NO
PICK-UP
NO
STORE LIST IN CUSTOMER FILE
PRESENT TO CUSTOMER UPON ISSUANCE OF PORTABLE TERMINAL
SELECT PAYMENT SCHEME AND DELIVERY DATE AND LOCATION
CONFIRM ORDER AND PAYMENT
DELIVER ORDER TO ATTENDANT WITH PORTABLE TERMINAL.
SCAN ITEMS AND CORRECT IN MARKED CONTAINERS
DELIVER CONTAINER TO CUSTOMER SELECTED DELIVERY SITE

FIG.10

# INTRANET SCANNING TERMINAL SYSTEM

## RELATED APPLICATIONS

This application is a continuation-in-part of U.S. patent application Ser. No. 08/706,579 entitled "DEVICE AND METHOD FOR SECURE DATA UPDATES IN A SELF-CHECKOUT SYSTEM" filed on Sep. 5, 1996. U.S. Pat. No. 5,825,002, and is, related to pending U.S. patent application entitled "Portable Shopping System" filed on Dec. 20, 1996.

## FIELD OF USE

This invention relates generally to an improved portable data terminal and a system for communicating information over a wireless communication network using the portable terminal.

## BACKGROUND OF THE INVENTION

The use of data collecting portable computing terminals such as the PPT 4100 and the PPT 4600 manufactured by Symbol Technologies, Inc., the assignee of the present invention, has been adopted in many commercial applications. These terminal systems may include integrated bar code readers which permit the collection, storage and distribution of a high volume of data without the need for extensive keypad data entry. These terminal systems also provide full computing capabilities using standard PC architectures. These terminal systems may also be provided with wireless communication radio systems such as Symbol Technologies, Inc. local area network radio system "SPECTRUM24™". The SPECTRUM24™ radio network system permits hand-held terminals to share and retrieve data in the proximity of local area networks with a central host.

Hand-held computing terminals offering various computing functions have been previously used in consumer applications. Examples of such systems are described in Dutch Patent Application No. 9002296 ("the '296 Application") and U.S. Pat. No. 5,468,942 to Oosterveen et al. ("the Oosterveen Patent"). The '296 Application and the Oosterveen Patent describe systems in which an authorized customer is issued a terminal having an integrated bar code scanner to record merchandise purchases. The scanners maintain a list of merchandise selected for purchase by the customer within internal memory means. Prior to exiting the store, the information stored in the memory of a scanner is downloaded through a communication port attached to a terminal dispenser, and a printed ticket of the customer's purchases is printed on a printer. The customer then proceeds to a (checkout register where the customer tenders payment for the purchased merchandise. The systems may provide for the occasional audit of customers using the system to ensure integrity of the self-service system.

Commercially available prior art self-checkout systems have employed relatively simple and unsophisticated consumer systems which have generally been limited to providing simple pricing and product identification information.

## SUMMARY OF THE INVENTION

It is the object of the present invention to provide an improved portable terminal and data communication system.

It is a further object of the present invention to provide a standardized system for presenting data at a portable terminal by retrieving associated data files stored at remote addresses by employing a wireless communication network. In a preferred embodiment, the portable terminal employs a relatively simple microprocessor and system architecture while providing full graphics and audio support.



It is a further object of the present invention to provide improved access to generally available multi-media data files associated with an item identified by a portable terminal.

It is a further object of the present invention to provide an improved self-scanning system which provides improved multi-media support and direct marketing functions.

In a preferred embodiment of the present invention, a portable terminal having an integrated machine code reader and a radio is provided with a graphical user interface such as a "web browser." The terminal is provided with a display for illustrating help and instructional files associated with a selected item identified with the machine code reader. Thus, a warehouse clerk who reads a bar code from a box of potato chips will automatically retrieve from the central host an instruction file instructing the person where to forward the package, or in an alternative embodiment, an airplane mechanic will be provided with repair instructions from a central host for an engine part which is marked with a machine readable code. In an alternative embodiment, a consumer using a hand-held terminal in a self-scanning application of the present invention (sometimes referred to as self-shopping or self-checkout) receives marketing, pricing, and additional information from a central host for products she has scanned with her portable terminal.

The information downloaded to the hand-held terminal can be presented in any number of forms. The data can be presented in the form of a still picture, text, audio or as video. As a result, a mechanic unknown to the manufacture using an open standard communications network and a generic hand terminal can download a video image of an engine part and a video clip for the part providing instructions on its removal and repair. The use of standard data protocols such as those used currently on the Internet permit wide area accessibility over commercial and closed communication networks on any number of hardware platforms.

A preferred alternative embodiment of the present invention includes machine readable coded labels having one or more remote file location, such as uniform resurrect locators ("URLS") used to reference sites on the world wide web. These URLs are used by the portable terminal to retrieve data files including items such as prices, nutritional data, coupon availability, promotions, marketing data and general interest data from various local and remote addresses available over a wireless communication network. The machine coded labels are preferably encoded with a high-density bar code such as PDF417. These URLs can be presented on the terminal display in the form of a hyperlink which submits a data retrieval request to a remote address upon selection. The displayed hyperlink could be presented on the display as either a direct address (URL) or a highlighted title for the address.

In an alternative embodiment of the present invention, a portable terminal having a unique address on the system is provided with a voice transmission channel. This permits the terminal to function as a telephone and pager. The telephone line could be automatically established using an associated data link or by dialing a phone number.

## BRIEF DESCRIPTION OF THE DRAWINGS

The present invention will be understood and appreciated more fully from the following detailed description, taken in conjunction with the drawings, in which:

FIG. **1** is a general block diagram of a system employing a preferred embodiment of the present invention;

FIG. **2** is a preferred embodiment of a portable terminal of the present invention;

FIG. **3** is a functional block diagram of the basic subcomponents of a preferred embodiment of a portable terminal of the present invention;

FIG. **4** is an alternative preferred embodiment of the present invention used in a self-scanning application;

FIG. **5** is a cross-sectional view of the portable terminal illustrated in FIG. **4**;

FIG. **6** is an alternative preferred embodiment of a system of the present invention employed in a self-scanning system;

FIGS. **7A–7E** are illustrative examples of display outputs employed in a self-scanning system employing a preferred embodiment of the present invention;

FIG. **8** is a general functional block diagram of a telephony system used in a portable terminal of the present invention;

FIG. **9** is an example of system components used by a consumer in a self-scanning system employing a preferred embodiment of the present invention; and

FIG. **10** is a flow chart of a home shopping delivery system employing a preferred embodiment of the present invention.

## DETAILED DESCRIPTION OF THE PREFERRED EMBODIMENT

The present invention employs a portable terminal having an integrated machine code reader. Although the system will be described in terms of a portable terminal employing an integrated bar code laser scanner, it will be understood by those skilled in the art that the machine code reader can be a radio frequency identification tag reader, a CCD bar code reader or any other type of machine code reader which can decode encoded indicia on an article.

The portable terminal of the present invention employs a wireless communication radio for communicating data to a central computer over a wireless communication network, The network could be either a local area network ("LAN"), such as Symbol's SPECTRUM24™ spread spectrum frequency hopping communication network, or a wide area communication network system ("WAN") such as those employing a cellular digital packet data (CDPD) communication protocol, or a combination of LAN and WAN systems.

Data collected with the portable terminal is communicated to a central host. In a preferred embodiment, the central host performs most of the computing functions, thereby reducing the computational memory and power requirements of the portable terminals communicating with the system. The central host is preferably connected to other remote networks through high speed communication links such as commercially available **T1**, **T2** or **T3** type telephone connections. Through such connections, the central host may communicate with third party servers employing standard TCP/IP and other standardized communication protocols to transmit/retrieve data.

The present invention will be described in terms of an improved portable shopping system in a retail facility. However, as noted above, it will be understood by those skilled in the art that the present invention may be utilized in any data collection environment in which data is communicated from a central host to an end user employing a portable data collection terminal.

### A. THE PORTABLE TERMINAL

FIG. **2** illustrates a preferred embodiment of a portable terminal of the present invention. The terminal **70** is provided with a display **72**. The display is preferably a CGA or VGA type video display having a touch sensitive surface. The display will function both as a video display and a data input device. A pen **73** is also provided on the terminal **70**. The pen **73** is located in a pen slot **73A** when not in use.

In a preferred embodiment, the terminal **70** is also provided with a limited number of activation buttons **76**, **77** and **78** for performing various user functions. In the context of a preferred portable shopping system, the portable terminal includes a "plus" key to "add" an item selected by a consumer to a list of purchased items, a "minus" key to "delist" a previously selected item from the purchase list which is to be returned to the shelves of the store, and an "equals" key to display the total cost of the items selected for purchase.

In a preferred embodiment of the present invention, the terminal **70** is provided with a voice communication system including a microphone **71** and a speaker **74**. This voice communication system may be used to obtain assistance from a store operator or to transmit audio data broadcast by the central host, i.e., "Please proceed to the store checkout center, the store will close in ten minutes" or "Soda is on sale for 89 cents in Lisle five." Video messages may also be transmitted to the video display **72**. In order to protect consumers in retail facilities, from unwanted commercial transmissions, the terminal is also provided with a commercial transmission "on/off" button **79**. This button disables transmission of broadcast audio and/or video commercials to consumers during their shopping trips. Preferably, the "off" button will not disengage the transmission of urgent messages such as a lost child notice, an emergency notice, or as described further below, a specified preference information message. In addition, the voice system on the portable terminal may also be used to provide voice activated control commands on the portable terminal.

Collection of data is preferably performed by a bar code scanner **75**. Preferably the scanner will be able to read one and two dimensional bar codes such as the ubiquitous UPC code and PDF 417 code. In an alternative embodiment of the present invention, the scanner is detachable from the terminal so that the terminal may be attached to a shopping cart with a shopping cart cradle and the scanner can be detached for use by the consumer. The scanner could be provided with either a short range radio link and its own battery supply or a wired connection. In the event the products selected by the customer also bear electronic article surveillance (EAS) tags, the terminal may also be provided with a deactivation circuit which is activated when the product is scanned for purchase and deactivation prior to the product being delisted from the consumer's shopping list. An example of such an activation/deactivating system is described in pending U.S. patent application Ser. No. 07/919,410 filed on Jul. 27, 1992 which is assigned to Symbol Technologies, Inc. The EAS tags are preferably used on a limited number of restricted sales items so that the EAS tags will be deactivated/activated only upon determination that the selected item is available for purchase by th(e customer at that specified time and place.

The portable terminal **70** communicates with a central host through a wireless; radio **80**. In a preferred embodiment of the present invention, the radio **80** is a Symbol SPECTRUM24™ PCMCIA type II card communicating over a local area network employing a frequency-hopping communication system conforming to Draft D5 of IEEE proposed standard 802.11. The standard is available from IEEE Standards Department, 445 Hoes Lane, P.O. Box 1331, Piscataway, N.J. 08855-1331. The standard is incorporated

he,rein by reference and shall not be further discussed. The system employs data throughput of at least one mega bit per second. Depending on the volume of data being transmitted, discrete communication systems, such as SPECTRUM ONE®, also available from Symbol Technologies, Inc., may also be used. Moreover, many other frequency bands and data encoding schemes could be employed which provide adequate bandwidth and security.

The ergonomic design of the portable terminal shown in FIG. **2** permits a consumer to use the terminal in either horizontal configuration along line A—A, or in a vertical coconfiguration relative to line A—A. The terminal is provided with a reconfiguration key setting which permits the video system to automatically reconfigure its display to reflect the user's preference. The reconfiguration key 79A will automatically reconfigure the video display to change the display configuration from the first configuration, e.g., landscape, to a second configuration, e.g., portrait. The reconfiguration function permits a facility to connect the portable terminal to a fixed station in more than one arrangement. Thus, depending on space requirements, the portable terminal may be used as part of akiosk to provide a fixed station for presenting pricing data, advertising and customer assistance.

FIG. **3** illustrates the basic subcomponent systems of the portable terminal shown in FIG. **2**. As shown, the system **70** includes a CPU **701** which communicates with the radio **702**, scanning subsystem **704**, the video subsystem **705**, the telephone subsystem **706**, data input device **707**, and an EAS tag activation/deactivation circuit **708**.

FIGS. **4** and **5** illustrate an alternative embodiment of a portable terminal of the present invention. In FIG. **4**, terminal **100** is provided with a display **110**. The display is a partial CGA display having a multi-contact navigational pad **106** for scrolling through the full video image presented to the consumer. In addition, the terminal **100** is also provided with a scanner **120** for reading bar code labels **122**, three input buttons **101**, **102** and **103**, a speaker **104** and a microphone **105**. The portable terminal **100** is equipped with a radio **108** and a rechargeable battery **107** inside the casing, shown in FIG. **5**. Also shown in FIG. **5** are the main circuit board **111**, the scan engine **120**A, and battery recharging terminals **107**A and **107**B which are connected to a recharging circuit (not shown). A separate circuit board **109** is also shown for the optional telephony application. A battery overcharge protector circuit is also included but not shown.

## B. THE CENTRAL HOST

In the preferred embodiment illustrated in FIG. **1**, portable terminals **12**A, **12**B, **12**C, **12**D and **12**E in location **10** communicate to a central host **14** through multi-access points **13**A and **13**B. As described above, the terminals communicate in the local area network **10** with a SPECTRUM24™ network. The network provides a transparent wireless connection to an Ethernet LAN **16** through multiple access points **13**A and **13**B. Preferably, each of the access points is compatible with the Simple Network Management Protocol (SNMP).

SPECTRUM24™ employs a frequency hopping modulation technique that offers a high-capacity network by using multiple access points which may be connected to an existing wired LAN backbone. The system employs more than **70** non-overlapping frequencies which minimize the probability that one cell will operate on the same frequency at the same time as another cell. The system is designed to work in the 2 to 2.5 Ghz frequency band.

Data collected by the central host **14** through the Ethernet LAN backbone **16** (FIG. **1**) is processed locally. To the extent the received data requires, a response, the central host retrieves data, processes information and retransmits data to the portable terminals. In the event the terminal's request should require the retrieval of data not stored on the central host **14**, the central host **14** may retrieve data from external sources such as IP addressable servers **40** and **50** through a wide area communication network **30**.

Host **14** may also use the wide area communication network **30** to communicate data to another host **24** at a related site **20**. The two sites could also be linked to provide pass, through communication between a terminal **12**A located in site **10** and a terminal **22**A located at site **20**.

In a preferred embodiment of the present invention host **14** and host **24** communicate data over the wide area network **30** with open standard protocols and data types such as that used by an Internet server. Such a system would permit host **14** to retrieve and utilize data from servers without complex data conversion and translation routines. In a preferred embodiment, the open architecture standard is also designed into the portable terminals so that data files can be transparently retrieved by the portable terminals **12**)A–**12**E through to the host **14**. With respect to sensitive and confidential data, it is preferred that the systems employ encryption technology or use a secure closed communication link.

## C. THE SELF-SCANNING SYSTEM

In a preferred embodiment of the present invention, locations **10** and **20** (FIG. **1**) are retail facilities employing self-scanning systems illustrated in FIG. **4**. These systems are also sometimes referred to as self-checkout and self-shopping systems which terms will be used interchangeably herein. In FIG. **4**, the portable terminal **100** communicates over a wireless communication network **130**. In the illustrated embodiment, the multi-access point **13** (FIG. **1**) is incorporated into a controller **150** which functions as the central host to the portable terminal **100**. The controller **150** is coupled to an in-store point of sale (POS) controller **160** which may be an IBM 4680/90 or similar computer which includes price information and maintains statistical data as to purchases, discounts, inventory, and promotional information. Although these controllers are shown as physically separated items, they could also be logical distinct software items in a single hardware device.

The in-store controller **160** is coupled to the retail facilities point-of-sale terminals **170**. The point-of-sale terminal **170** is used to receive payment from customers after they have selected items for purchase and to process customers not using portable terminals to collect items; for purchase. Payment may be made by electronic means via a card swipe/reader **175** or through a standard cash/check transaction.

### 1. System Operation

FIG. **9** illustrates various components of a self-checkout system employing a preferred alternative embodiment of the present invention. The system components are used by a consumer during a self-checkout transaction.

As illustrated in FIG. **9**, a customer is provided with a customer loyalty card **210** having encoded customer data stored thereon. Corresponding customer information is also placed in a customer data file on a central storage system. Once a customer loyalty card **210** has been issued and a corresponding customer data file is established on the central storage system, the customer may then use the system to

perform self-checkout of merchandise distributed in a facility employing the self-checkout system.

To use the system, a customer proceeds to an entrance unit **220** and inserts their customer card **210**. A card reader on the entrance unit **220** reads the information stored on the card and checks with the central storage system to confirm that a corresponding customer data file exists and that the customer is authorized to use the system. Once, system approval is obtained, a display unit **224** on the entrance unit **220** instructs the user to proceed to a designated area of a dispenser unit **230** to retrieve a designated data collection unit such as portable terminal with an integrated bar code reader **240**. Although not shown, the self-checkout system could also be provided with an entry gate which is activated to permit entry of the customer upon the assignment of the bar code reader **240** and activation of blinking lights **233** located on the side of and above the dispenser which directs the customer to the location of the bar code reader **240** in the dispenser units. These entry and directional systems are especially necessary in large stores having a high number of dispenser units.

The bar code reader **240** is provided with a flashing light **242** to assist the customer in retrieving it after it has been assigned to the customer. The flashing light **242** is activated by the central processor (shown in FIG. **2**) after it has been assigned to the customer and the assignment is recorded in the customer's data file. In an alternative embodiment, the bar code reader is further provided with an audible signal generator to assist the user in finding it in the terminal dispenser and a visual display for displaying either the customer's name or some other form of customer identifiable code. Although not illustrated, the dispenser system for the portable terminals could also take the form of a vending machine type dispenser or rotatable dispenser racks which rotate to provide a customer access to a selected terminal.

The hand-held bar code reader **240** is stored in one of a plurality of slots **234** in the dispenser unit **230**. Each of the slots is physically and electronically marked and may be provided with locking means for locking the bar code reader **240** in place until the bar code reader is assigned for use to a customer. The physical marking is used to direct the customer to the proper location on the dispenser, i.e., location "A9," and the electronic marking is provided as a means for identifying the location of the bar code reader by the central processor. The electronic means may comprise a bar code located on the terminal dispenser **230** such that when the bar code reader **240** is locked in place, the bar code can be read by the bar code reader **240** and communicated to the central processor. Once the bar code reader **240** is assigned to a customer, the locking means is disengaged. In the event the bar code reader is not removed from the slot **234** after a predetermined time period, it is again locked and the customer data file for the customer to whom it was assigned is updated to reflect that the customer did not take possession of the reader within the allotted time period.

Prior to issuance to a customer, the bar code reader **240** could also be required to scan the bar code located on the terminal dispenser as a self-diagnostic tool. In a preferred embodiment, the bar code is sufficiently degraded to test the outer boundaries of the bar code reader's capabilities. Thus, if the bar code reader is unable to read the bar code and communicate the bar code symbol to the central processor, it will not be assigned. The central processor will notify the supervising attendant that the terminal is not functioning properly.

Once a customer has been issued a bar code reader **240I**, the customer proceeds through the retail facility and uses the bar code reader **240** to record purchases. Preferably each item is either coded with a code which is recognizable to the bar code reader, or in the case of produce which is sold by weight, is provided with a machine for generating an adhesive bar coded ticket after the produce is weighed. Upon scanning of the code on a selected merchandise item **260**, a display **244** on the bar code reader **240** displays product information such as price, product name, quantity and nutritional information. In a preferred embodiment of the present invention, the bar code reader **240** acts as a dumb terminal with radio frequency communication means. In such case, all information is stored in a central location and the bar code reader **240** simply sends and receives data from the central location.

In a preferred embodiment of the present invention, the reader permits a customer to add a product to their record through the selection of an "add" key **246**, return a scanned product previously selected by selecting a "minus" key **247** or simply to perform a price check or other information check by pressing an "equals" key **248**. In a preferred embodiment, the "equals" key may also be used to provide the customer with a running total of the products selected.

Once the customer has completed their product selection, the customer returns the bar code reader **240** to the dispenser unit **230** where it is placed in an open slot **234**. Upon return of the bar code reader **240**, information collected with the bar code reader **240** is processed by a central processing unit and a ticket for the items is issued to the customer from a printer **232** which is located near or on the dispenser. The returned terminal also transmits its terminal identification code and the address of the slot into which it has been inserted for tracking by the system controller **150**. In an alternative embodiment of the present invention, rather than issuing a ticket at the terminal dispenser location, a card reader and data entry device **175** are provided at the cash register **170**. The customer may then enter their customer card, with or without an authorization pin number, at the cash register location.

Prior to updating any customer data files, the customer is requested to insert the customer loyalty card **10** and/or enter a pin code to ensure that the customer is in fact the same person who initially retrieved the scanner. This is especially important in the event the system provides for electronic fund transfers for payment and information for such transfers are stored wholly or partially in a customer data file.

Once the central processing system has successfully retrieved the customer information from the bar code reader **240**, the customer then proceeds to a checkout register **170** for payment of the products selected. In the event a debit operation was made at the dispenser unit **230** through a card reader **175** and data entry device (not shown) which issues a receipt of payment including a list of purchased items, confirmation of payment. The checkout system may be an automated system or a manually operated system. The ticket is either scanned or otherwise read at the checkout **170** and the customer is asked to pay for the goods selected if payment has not been previously made.

Recognizing that some goods may not be scanned due to coding damage or otherissues, a customer may proceed to a manned checkout station such ;as POS terminal **170** for the addition of items to their receipt. At such point, additional payment may need to be made using traditional payment schemes, or if the central processing unit is being used to provide a debit function, customer card and pin code information may need to be entered at the checkout facility, After all items are selected and the transaction is complete, the customer's data file is updated in the central processing unit to reflect the customer's shopping activities.

2. Customer Data Downloads

As discussed above, in a preferred embodiment of the present invention a portable terminal is provided with a high resolution graphical screen for displaying text and graphics to the consumer, and a two-way radio. In the context of the present invention, these interactive multi-media devices are employed to provide selective and broadcast data to consumers using the system.

In a preferred embodiment, each customer who uses the system has an associated data file stored on the central host including a customer preference list. Thus, when a customer is issued a portable terminal **100**, the central host creates a transaction file for the customer to track the customer's shopping history and also downloads preselected preferences. Suck, preferences may be collected/activated when the customer signs up for the system or may be added or modified later through a customer service desk or kiosk (not shown) which is connected to the central host **150**. The preference list may be stored on a computer database or on the customer's identification card.

Preferences may include display available information on:

(1) cholesterol
(2) calories
(3) fat content
(4) generic brand alternatives
(5) better buy alternatives
(6) brand name alternatives
(7) electronic coupons
(8) paper coupons
(9) contests
(10) News
  (a) general
  (b) metro
  (c) sports
  (d) markets
  (e) local events
  (f) celebrity news briefs
(11) general advertising broadcasts
(12) language
  (a) English
  (b) German
  (c) Spanish
  (d) French
  (e) Italian
  (f) other
(13) size
(14) special family event dates
  (a) birthdays
  (b) holidays
(15) preferences of other family members if approved upon registration
(16) frequent shopper point level, including those from partner companies (e.g., Blockbuster and **7–11**)

A user selects which, if any, of the following categories of information they would like to activate during their shopping transaction. Certain of the preferences may be activated by the scanning of certain items. Examples of such preferences are selections (1), (2), (3), (4), (5), (6), (7), (8) and (9). For instance, if a customer has activated items (1), (2) and (5), the customer's scan of a pint of frozen yogurt may prompt the customer that the product has a certain amount of cholesterol and calories per serving and that a cheaper per serving alternative for the same brand is available in a one-quart container.

Certain data may not be item selection sensitive. For instance, if a customer selects that they are interested in receiving "celebrity news briefs" they may have a portion of their display function as a ticker-tape data field in which data regarding various celebrities is continuously displayed. The ticker tape may include story headlines, which may be selected for presentation of a full story. Alternatively, if the screen is sufficiently large, a small segment of the screen may be devoted to video clips from relevant shows such as "CNN" or "Entertainment Tonight."

In the preferred embodiment of the present invention illustrated in FIG. **4**, this information is downloaded to the portable terminal **100** over the wireless network **130**. The portable terminal is a DOS or Windows TM operating system having a browser type graphical user interface. Data displayed on the terminal's display will include "links" to other information. Accordingly, when a "fat content" value is displayed on the display, the "fat content" indicator is underlined and highlighted to indicate that the selection of the "link" will retrieve additional information. If the link is activated by navigation keys **106** (or by touching the selection if using a touch sensitive display pad) the portable terminal will retrieve additional data through the controller **150**. The data, such as recommended daily amounts, alternative products with lesser fat contents, etc. may be stored at the controller, in which case, the relevant information is downloaded directly to the portable terminal. Alternatively, the "link" represents a data file stored at a remote source such as the manufacturer's web page, in which case the controller **150** sends the request over a wide area network and retrieves the data and routes the data to the portable terminal. The link may also include embedded passwords and data request commands required by the remote server for retrieval of the highlighted data field.

The structure discussed above permits the retail facility to use standard programming tools such as HTML 3.0 for the creation of an Intranet/Internet environment for the operation of the portable terminals **100** and for ease of retrieving and converting data files from external sources for use on the system.

FIGS. **7A–7E** illustrate an application of the present invention on a portable terminal employing a four by twenty line display in which each line: consists of a five by eight pixel matrix which can be converted to pixel data to generate graphical characters.

FIG. **7A** illustrates the initial screen of a portable terminal upon retrieval of the unit. As illustrated in FIG. **7A**, a generic message is displayed to each user which includes a message regarding a Holiday Special: Pumpkin Pies. The item is underlined indicating that the selection may be activated to retrieve additional information. In this case, although not shown, the information retrieved would indicate the price and size of the pumpkin pie special, the location within the store where the pies are located and another link marked "Additional Specials".

In the event no selection is made and no other key is pressed within a predetermined amount of time (i.e., 10 seconds), the screen will display the instructions illustrated in FIG. **7B**. In FIG. **7B** the activation of any link will result in the display of additional information pertaining to the use of the keys on the portable terminal and a prompt for the selection of a different language in the event the originally selected language was incorrectly entered.

FIG. **7C** illustrates the use of a comparison function by the portable terminal. This feature is activated by the consumer upon the entry of the customer preference choices discussed above, or in the alternative is automatically activated by the

retail facility upon scanning of an item with the scanner **120** display. The feature causes the graphical display **110** to display an identification of the item scanned and its cost. In addition, the display also displays alternative brands and their costs. In the illustrated example, one selection, King's, includes a link with a marker, a star, indicating that an electronic coupon is available for the selected item. Selection of the item for a buy would automatically download the electronic coupon into the customer's transaction file. In the event the item is scanned for return, the electronic coupon is deleted from the consumer's data file.

FIG. **7**D illustrates a sample screen **120** after a consumer has selected several items for purchase, and pressed the equals key to display the current total. The portable terminal, downloads information from the central controller once the "equals" key has been activated. The information is then displayed on the display **110** providing the consumer visual confirmation that the items have been scanned for purchase. A consumer may see all the items by scrolling through the list by placing the cursor on the arrow keys and pressing the activation key. The list line on the display indicates that the Best Buy feature is on. Selection of that link will disengage the feature. In the event multiple features are available, a multiple feature link could also be displayed to provide a menu of links which will turn various features "on" or "off" as the case may be. The two selected items are also highlighted to indicate that an electronic coupon has been used for the Squash and that cheaper buys are available for Cadbury Chocolate purchase. The latter link would be disengaged and not shown in the event the Best Buy feature was not activated.

In FIG. **7**E, an example is provided of a consumer using the cholesterol preference.

The consumer has scanned an item of broccoli, a no cholesterol item. The scanned item is displayed with a friendly message and a happy face which in this case acts as a "link" to a consumer's advocate home web page available on the Internet which provides various data and recommendations on how to prepare broccoli and other healthy foods. The selection of this link, in the illustrated example, would download a text-only version of the web page. In the event a larger display was used such as that shown in FIG. **2**, the graphics version of the page would be displayed.

The portable terminals could also be used to download audio data files. This would be especially useful to visually impaired consumers. Those consumers who have difficulty reading small print such as nutritional information on items would be able to scan an item and find its price and nutritional data through an audio output. In the event a consumer requires assistance, the portable terminal could also be provided with a working telephone subsystem.

Each unit is provided with a unique IP address. A consumer who sends out audio data or an assistance request may receive audio assistance. In a preferred embodiment, a consumer selects the help link associated with any of the selection keys, as illustrated in FIGS. **7**B and **7**E, or selects an audio link as illustrated in FIG. **7**D. This selection generates a help request command to the controller which forwards the request to a service desk, which may be located at a point-of-sale terminal location **170**. Once the clerk responds to the message request, the message request, the clerk opens a voice channel with the consumer which provides for a telephone type communication. Although the data is transmitted using packed data communication techniques using the portable terminal IP address, the communication networks described above provide for adequate through puts to establish a real time communication link. Thus, if a consumer needs assistance in retrieving an item from a top shelf or has injured himself, he can communicate his message directly to a customer service attendant.

Illustrated in FIG. **8** is a block diagram of a preferred embodiment of a telephony system employed in a terminal of the present invention. In FIG. **8**, a PCM CODEC (coder/decoder) chip **330** is connected to a CT8015 DSP chip **320** and a 6805 processor chip **310**. This chip set is connected to a communication part of the terminal which is provided with a data, input user interface **301**, and a phone program **302** stored in read only memory. The phone program utilizes a TCP/IP or other protocol stack **303** which communicates packet switched data over a SPECTRUM24™ radio PCMCIA card **304**. The audio input and output are configured to be placed next to the user's ear and mouth similar to a standard telephone handset and to provide an echo, so that a user can hear what he is saying when he speaks into the microphone. This configuration is preferred in any system in which the terminal is being held up to the user's head for use, such as that shown in FIG. **4**.

The 6805 chip **310** sends and receives packets of data between the CT8015 DSP chip **320** and the serial port **305**. Packets received from the CT8015 on the terminal's CPU via the serial port **305**. The user interface software is designed to identify the selection of an IP address on the display. Alternatively, the user interface **301** could simply send a telephony request message and wait for a telephone communication channel open command to be received from the controller over the wireless communication link.

The phone program is a memory resident (TSR) program and handles the actual processing of audio communication which includes processing user interface data, routing the packets from and to the SPECTRUM24™ network, and routing packets from and to the local CT8015 chip. The phone program **302** also performs the handshaking procedure with the CT8015 chip **320**.

The two-way audio system of the present invention permits retail facilities to transmit emergency broadcast messages on the portable terminal and permits customers to respond quickly. For instance, inquiries as to a lost child could be made by a parent and retransmitted to all other users in the store or to a service attendant, located near the store exit who can ensure that the lost child is not permitted to leave the facility. Moreover, the phone system permits facilities having multiple locations to use service desk assistants located at a, central location to service multiple locations. A store need not set up a telephone help desk at each location. In addition, the telephony application could also be implemented to provide (i) customer notification upon the availability of an ordered item (i.e., deli order is ready), (ii) place orders for out-of-stock items, and (iii) identify the location of all store shoppers and employees.

3. In-Store Marketing

The self-shopping embodiment of the present invention permits broad in-store marketing programs including pinpoint marketing, coupon distribution and coupon tracking. An example of a preferred marketing system employed in a system of the present invention is described below.

The application of an electronic coupon system has been previously described above. In the event electronic coupons are not available for a particular product, the system, i.e., software on the central host, could be provided to identify the existence of other couponing or discount system applicable to a scanned product. For example, some retail facilities provide coupon dispensers at entrance points and in aisles. If such a coupon:system exists for a scanned item, the controller generates a link for the scanned item, identifying

the nature, availability, conditions, locations and amount of savings generated by the coupon, and the customer may then proceed to the location and physically retrieve the coupon. A coupon redemption center may then be provided for expedient conversion of the coupon into the customer's transaction file Alternatively, the coupon can be presented at a checkout register or, if the coupon is provided with a machine coded label, i.e., bar code, it may be scanned with a portable terminal which will register the coupon on the system and apply it to a previously scanned or subsequently scanned item. This pre-scanning of coupons may be performed by a customer at the store or at home using a home scanner (such as one attached to the customer PC 45) and downloaded into the customer's data file at the facility.

In order to provide coupon functions, the central host is provided with a database of available electronic coupons and hard coupons. In a preferred embodiment, the system automatically creates a linked page for scanned items including, any associated information matching a customer's preference profile. The system will employ a dynamic page builder using a predetermined coupon template wherein a hyperlink to a page of coupon data is presented. In the event the page exceeds the display limitations of the display (i.e., requires more lines than are available on a single display) for the terminal in use, the page builder automatically creates a new "next page" link to be displayed on the terminal. The dynamic page builder program also permits an override function in the event a link is provided to an external web page address. Using the IP address of the portable terminal, the central host will retrieve the file from a remote site (i.e., an Internet server) and retransmits the web page to the portable terminal. The retransmission by the central host will include any reformatting constraints which are applicable to the destination portable terminal which may only have a partial view screen capability. The resulting collection of data may then be transmitted to the in-store system by E-mail transmission or through a data collection article such as a smart-card or a floppy disk. Store receivers (i.e., kiosks) would be installed to load such data on to the customer's data file.

In addition to the coupon schemes discussed above, the central host also provide., and tracks other marketing programs in response to the scanning of predetermined items by a consumer using a portable terminal of the present invention. One example is a "buy two and get a third item free" or "for fifty percent off" discount prompt at the display. In the event of company rebates, the system could be employed to generate automatic redemption requests by the system. In accordance with a preferred embodiment of the present invention, the central host generates a list of consumers who have bought articles having a rebate feature. The store may then print fully formatted rebate requests upon receiving payment from the consumer or automatically communicate the rebate request to the company providing the rebate. This would provide for the automatic rebate of finds to the consumer or for the crediting of the consumer's account at the specific facility. The central host also maintains detailed logs as to the nature, quantities and results of such transmissions.

In another preferred embodiment, the central host is programmed to inform customers that a selected item is a restricted item and cannot be purchased by the consumer at that come. For instance, in some states alcoholic beverages may not be sold on Sundays. Thus, if consumer scans the product for purchase, the portable terminal will display a message or play an audible message conveying the prohibition. Similarly, if a customer who is below the minimum drinking age attempts to purchase an article of alcohol, they will be reminded of the drinking age and a notice will be provided to the local service attendant upon an attempted payment that a person of unknown or insufficient age has attempted to buy an age restricted item.

In another embodiment of the present invention, the portable terminal is used to present advertising messages to the consumer. The central host will detect items scanned by the portable terminal having an associated advertising message or video display. Thus, when a consumer scans a "Coke" can, he may receive the voice message "COKE IS IT." Alternatively, the central host may also maintain a file of the customer's prior purchase records, and detect correlation of purchased items. If such a correlation to a scanned item is identified, the portable terminal may be prompted to display a message reminding the consumer to purchase other associated products or products usually purchased by the consumer but not currently selected. For example, if a consumer purchases hot dogs, the central host may send a message to that portable terminal, "Do you need hot dog buns and mustard?" The message would be dependent on the customer's transaction list and prior purchasing history, a positive, response selected, and if the display would show a new page providing cost and location data. In addition, if the customer's prior purchase record indicates that the customer usually buys charcoal with hot dogs or hamburgers, the terminal may also ask the customer if he needs "Charcoal." Again, the prompted items would be provided with a link to an informational page to provide cost and location. The item prompts would also be turned off in the event the central host determines that the product is out of stock.

In an alternative embodiment, the central host prompts the portable terminal to display customer specific data and external advertising messages. For instance, if a customer comes in on their birthday the store could offer the customer a free coffee and chocolate cupcake. Alternatively, a local hair salon could send a message to all consumers who scan a particular high-end beauty product.

In another preferred embodiment of the present invention, the central host also provides for the uploading of customer shopping lists. Thus, a customer may generate a shopping list and Email the list to a predetermined secure (i.e., password protected) Email address. The customer's Email address would be predetermined and automatically associated with a customer's file at the shopping facility. When the customer is assigned a portable terminal, the portable terminal's initial prompt will also include a message link indicating that a message has been received for the customer. The selection of the link would cause the Email message to display on the portable terminal.

In a further embodiment of the present invention, the central host delivers to the customer via an Email address on a customer's PC 45 (FIG. **1**) a list of previously purchased items, or in the alternative, the central host makes available on a customer accessible but password protected web page the customer's prior purchase records and a complete listing of available items at the store. As described in FIG. **10**, the customer may then select items for inclusion on a customer specific shopping list by checking specific items which are to be purchased and the quantity required for purchase. By using the item selection method, i.e., selecting from a store's list of available goods, the list may be used to prompt customers on their next visit to the store the exact location and price of the selected items on the list by ensuring that the notation used by a customer for items selected for purchase will match the product identifiers used by the central host. The above described shopping list system also permits for

home delivery of items because of the assurance of a match between items selected by a customer and items including brand, quantity and price available at the facility.

In a preferred embodiment of the present invention, the customer selection of items is made through a graphical use interface which simulates a store layout, i.e., aisles with items in them as they are stacked within the store. This permits the user to find items they know are located in certain aisles of the store. Once the customer has completed their selection the shopping list is also provided with a general comment section to provide special instructions to the store or reminders to themselves. It is preferred that the central host acknowledge receipt and recognition of selected items by Email response or telephone call toe the customer's location. In the event of an Email order for home delivery, it is also preferred that the customer receive a telephone call to ensure that the customer has in fact placed the order and to provide credit card verification information if the order is to be paid in the form of an electronic fund transfer.

Once the customer's order has been placed electronically, a store attendant using a portable terminal of the present invention is prompted to collect items for delivery to the specified customer. The attendant collects and scans items which have been selected for purchase. In the event a product is not available because it has been depleted subsequent to the order being placed, the attendant is provided with an out-of-stock marker. The marker could be a bar coded command on a bar coded command sheet provided to the attendant which could include scannable instruction codes such as "Begin new client collection," "Out of stock item," "Suspend client collection," "Cancel client collection" and "Scan bag for client." For example, in the event the item selected by the customer for purchase is out-of-stock the bar coded command indicating that the item is out of stock is scanned by the attendant. The shopping list delivered to the customer is then modified to indicate the item has not been included for delivery to the customer. In a preferred embodiment of this system, the customer may mark items as "essential" or "required for delivery" so that key ingredients (as in recipes) are not omitted which would make the rest of the requested items unnecessary. Thus, if a customer selects items on a list based on a recipe which is suggested on the store's home page, and a critical element is not available, all the items on the recipe may be withheld. This "requirement" condition can be tagged to the complete list or simply a portion of the list using any number of methods which would become obvious to one skilled in the art subsequent to reading this description. Essential items could also be linked to or marked with alternative products.

As a result, a customer's shopping list will be subdivided into a series of lists with related items which a customer may redesignate for its own purposes. Once the attendant has completed the collection process, the attendant prints out customer stickers which are placed on bags used to transport a customer's selected items to the customer's delivery location. The attendant may be provided with a portable printer which is commercially available from Symbol Technologies, Inc.

In order to improve on the efficiency of the delivery system described above, it is preferred that the customer include a delivery time window and location in their delivery requests. Once these entries are entered into the central host, the central host will order the collection of home delivery orders so as to provide for the delivery to customers located in proximity to each other in both location and delivery time periods. In addition, a customer's shopping list may also be reorganized by the central computer to account for efficient collection of goods for the attendant relevant to current location. Thus, all items in the same aisle will be grouped together for collection by the attendant and once a location within the aisle is identified by the scanning of a current or prior article, the order will be reordered to provide for the ordered selection of goods within the aisle. This dynamic reorganization of items allows for real world situations in which an attendant may be called away for a moment or simply proceeds in an inefficient direction.

The attendant could also be provided with a "bag" link on the portable terminal. Each bag may be provided with a unique coded identifier. Once the attendant begins using the bag for a particular customer's products, the attendant can scan the bag code with the portable terminal using the "plus" key. The portable terminal will identify this as a bag containing customer products and automatically associate the bag to the customer. The identification of the bag and contents is stored on the system and may be forwarded to a customer via E-mail or made available with a password protected web page. In a preferred embodiment, these "bags" could be reusable totes electronically matched to a customer identification code, and upon each delivery to the home, totes from the last delivery are retrieved and returned to the store.

In the event a customer selects the item for collection and pick-up at the store, the customer may proceed to a service desk shown in FIG. **6** to make payment and receive a receipt. The customer desk **800** is provided with a service console **810**, a card reader **820** for identifying a customer loyalty card, a report printer for generating report data for the customer, a card writer **830** and a receipt printer **840**. The customer may settle his account and proceed to collect his bags of goods.

The herein described embodiments of the present invention are intended to provide the preferred embodiments of the present invention as currently contemplated by the applicants. It would be obvious to anyone of skill in the relevant art based on the herein described examples without straying from the present invention that numerous modification could be made to the described preferred embodiments. For example, the portable terminal could take any number of forms including wearable solutions available from Symbol Technologies, Inc. and larger portable solutions described herein. In addition, the graphical user interface could also be implemented as a number of different presentation schemes. Moreover, although many of the preferred embodiments have been described in the context of a self-scanning supermarket application, the system could be used in any type of self-scanning application. For example, in a clothing store, the portable terminals could be used to provide information pertaining to recommended accessories which would match a selected item by providing cost, location and even a display of how two or more items would appear as one outfit. Accordingly, the herein described embodiments are merely exemplary in nature and are not intended to represent every possible embodiment of the present invention.

We claim:

**1**. A portable shopping system for selecting a set of items for purchase in a retail facility wherein each of said set of items includes a machine coded data file having a product information address, said portable shopping system comprising:

a plurality of portable terminals having a machine code reader for reading the product information address from

the machine coded data file, a spread-spectrum radio for communicating the product information address over a wireless communication network, and a display; and

a central controller having a spread-spectrum access point for communicating data over the wireless communication network and a central database including a set of product data corresponding to product information address, said set of product data including a price data portion and a product identifier, wherein at least a portion of the set of product data is transmitted to the portable terminal by the central controller in response to communication of said product information address from said portable terminal and the product information address is a uniform resource locator for a file stored on the central controller in a predetermined location.

**2**. A portable shopping system for selecting a set of items for purchase in a retail facility wherein each of said set of items includes a machine coded data file having a product information address, said portable shopping system comprising:

a plurality of portable terminals having a machine code reader for reading the product information address from the machine coded data file, a radio for communicating the product information address over a wireless communication network, and a display; and

a central controller having an access point for communicating data over the wireless communication network and a central database including a set of product data corresponding to product information address, said set of product data including a price data portion and a product identifier, wherein a least a portion of the set of product data is transmitted to the portable terminal by the central controller in response to communication of said product information address from said portable terminal and the product information address is a uniform resource locator for a file stored on the central controller in a predetermined location.

* * * * *