US011281338B2

(12) **United States Patent**
Skagmo et al.

(10) **Patent No.: US 11,281,338 B2**
(45) **Date of Patent: *Mar. 22, 2022**

(54) **TOUCH SENSING APPARATUS AND METHOD FOR ASSEMBLY**

(71) Applicant: **FlatFrog Laboratories AB**, Lund (SE)

(72) Inventors: **Daniel Skagmo**, Malmo (SE); **Robert Ehn**, Lund (SE); **Hakan Bergstrom**, Torna-Hallestad (SE)

(73) Assignee: **FlatFrog Laboratories AB**, Lund (SE)

(*) Notice: Subject to any disclaimer, the term of this patent is extended or adjusted under 35 U.S.C. 154(b) by 0 days.

This patent is subject to a terminal disclaimer.

(21) Appl. No.: **16/989,292**

(22) Filed: **Aug. 10, 2020**

(65) **Prior Publication Data**

US 2021/0096691 A1 Apr. 1, 2021

Related U.S. Application Data

(63) Continuation of application No. 16/834,905, filed on Mar. 30, 2020, now Pat. No. 10,739,916, which is a (Continued)

(30) **Foreign Application Priority Data**

Mar. 28, 2017 (SE) 1730085-6

(51) **Int. Cl.**
G06F 3/042 (2006.01)
G06F 3/041 (2006.01)

(52) **U.S. Cl.**
CPC ..... ***G06F 3/0428*** (2013.01); ***G06F 3/0421*** (2013.01); *G06F 3/0412* (2013.01); (Continued)

(58) **Field of Classification Search**
CPC G06F 3/0428; G06F 3/0421; G06F 3/0412; G06F 2203/04103; G06F 2203/04107; G06F 2203/04108
See application file for complete search history.

(56) **References Cited**

U.S. PATENT DOCUMENTS

3,440,426 A 4/1969 Bush
3,553,680 A 1/1971 Cooreman
(Continued)

FOREIGN PATENT DOCUMENTS

AU 2008 280 952 A1 3/2009
CN 201233592 Y 5/2009
(Continued)

OTHER PUBLICATIONS

Ahn, Y., et al., "A slim and wide multi-touch tabletop interface and its applications," BigComp2014, IEEE, 2014, in 6 pages.
(Continued)

Primary Examiner — Adam R. Giesy
(74) *Attorney, Agent, or Firm* — Finnegan, Henderson, Farabow, Garrett & Dunner, LLP

(57) **ABSTRACT**

A touch sensing apparatus is disclosed comprising a panel that defines a touch surface, a plurality of light emitters and detectors arranged along a perimeter of the panel. The light emitters are arranged to emit a respective beam of emitted light that travels above the touch surface, wherein the light detectors are arranged to receive detection light from the emitted light. The plurality of light emitters and detectors are arranged above the touch surface and are connected to a substrate extending in a direction parallel with a normal axis of a plane in which the panel extends. A method of assembling a touch sensing apparatus is also disclosed.

15 Claims, 18 Drawing Sheets

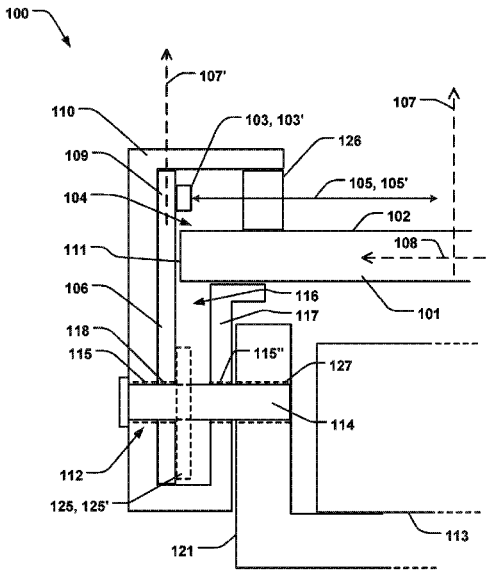

Related U.S. Application Data

continuation of application No. 16/191,177, filed on Nov. 14, 2018, now Pat. No. 10,606,416, which is a continuation of application No. PCT/SE2018/050109, filed on Feb. 6, 2018.

(52) **U.S. Cl.**
CPC *G06F 2203/04103* (2013.01); *G06F 2203/04107* (2013.01); *G06F 2203/04108* (2013.01)

(56) **References Cited**

U.S. PATENT DOCUMENTS

3,673,327 A 6/1972 Johnson et al.
4,129,384 A 12/1978 Walker et al.
4,180,702 A 12/1979 Sick et al.
4,209,255 A 6/1980 Heynau et al.
4,213,707 A 7/1980 Evans, Jr.
4,254,333 A 3/1981 Bergström
4,254,407 A 3/1981 Tipon
4,294,543 A 10/1981 Apple et al.
4,346,376 A 8/1982 Mallos
4,420,261 A 12/1983 Barlow et al.
4,484,179 A 11/1984 Kasday
4,507,557 A 3/1985 Tsikos
4,521,112 A 6/1985 Kuwabara et al.
4,542,375 A 9/1985 Alles et al.
4,550,250 A 10/1985 Mueller et al.
4,593,191 A 6/1986 Alles
4,673,918 A 6/1987 Adler et al.
4,688,933 A 8/1987 Lapeyre
4,688,993 A 8/1987 Ferris et al.
4,692,809 A 9/1987 Beining et al.
4,710,760 A 12/1987 Kasday
4,736,191 A 4/1988 Matzke et al.
4,737,626 A 4/1988 Hasegawa
4,746,770 A 5/1988 McAvinney
4,751,379 A 6/1988 Sasaki et al.
4,752,655 A 6/1988 Tajiri et al.
4,772,763 A 9/1988 Garwin et al.
4,782,328 A 11/1988 Denlinger
4,812,833 A 3/1989 Shimauchi
4,837,430 A 6/1989 Hasegawa
4,868,912 A 9/1989 Doering
4,891,829 A 1/1990 Deckman et al.
4,916,712 A 4/1990 Bender
4,933,544 A 6/1990 Tamaru
4,949,079 A 8/1990 Loebner
4,986,662 A 1/1991 Bures
4,988,983 A 1/1991 Wehrer
5,065,185 A 11/1991 Powers et al.
5,073,770 A 12/1991 Lowbner
5,105,186 A 4/1992 May
5,159,322 A 10/1992 Loebner
5,166,668 A 11/1992 Aoyagi
5,227,622 A 7/1993 Suzuki
5,248,856 A 9/1993 Mallicoat
5,254,407 A 10/1993 Sergerie et al.
5,345,490 A 9/1994 Finnigan et al.
5,383,022 A 1/1995 Kaser
5,483,261 A 1/1996 Yasutake
5,484,966 A 1/1996 Segen
5,499,098 A 3/1996 Ogawa
5,502,568 A 3/1996 Ogawa et al.
5,515,083 A 5/1996 Casebolt et al.
5,525,764 A 6/1996 Junkins et al.
5,526,422 A 6/1996 Keen
5,539,514 A 7/1996 Shishido et al.
5,570,181 A 10/1996 Yasuo et al.
5,572,251 A 11/1996 Ogawa
5,577,501 A 11/1996 Flohr et al.
5,600,105 A 2/1997 Fukuzaki et al.
5,608,550 A 3/1997 Epstein et al.
5,672,852 A 9/1997 Fukuzaki et al.
5,679,930 A 10/1997 Katsurahira
5,686,942 A 11/1997 Ball
5,688,933 A 11/1997 Evans et al.
5,729,249 A 3/1998 Yasutake
5,729,250 A 3/1998 Bishop et al.
5,736,686 A 4/1998 Perret, Jr. et al.
5,740,224 A 4/1998 Müller et al.
5,764,223 A 6/1998 Chang et al.
5,767,517 A 6/1998 Hawkins
5,775,792 A 7/1998 Wiese
5,945,980 A 8/1999 Moissev et al.
5,945,981 A 8/1999 Paull et al.
5,959,617 A 9/1999 Bird et al.
6,031,524 A 2/2000 Kunert
6,061,177 A 5/2000 Fujimoto
6,067,079 A 5/2000 Shieh
6,122,394 A 9/2000 Neukermans et al.
6,141,104 A 10/2000 Schulz et al.
6,172,667 B1 1/2001 Sayag
6,175,999 B1 1/2001 Sloan et al.
6,227,667 B1 5/2001 Halldorsson et al.
6,229,529 B1 5/2001 Yano et al.
6,333,735 B1 12/2001 Anvekar
6,366,276 B1 4/2002 Kunimatsu et al.
6,380,732 B1 4/2002 Gilboa
6,380,740 B1 4/2002 Laub
6,390,370 B1 5/2002 Plesko
6,429,857 B1 8/2002 Masters et al.
6,452,996 B1 9/2002 Hsieh
6,476,797 B1 11/2002 Kurihara et al.
6,492,633 B2 12/2002 Nakazawa et al.
6,495,832 B1 12/2002 Kirby
6,504,143 B2 1/2003 Koops et al.
6,529,327 B1 3/2003 Graindorge
6,538,644 B1 3/2003 Muraoka
6,587,099 B2 7/2003 Takekawa
6,648,485 B1 11/2003 Colgan et al.
6,660,964 B1 12/2003 Benderly
6,664,498 B2 12/2003 Forsman et al.
6,664,952 B2 12/2003 Iwamoto et al.
6,690,363 B2 2/2004 Newton
6,707,027 B2 3/2004 Liess et al.
6,738,051 B2 5/2004 Boyd et al.
6,748,098 B1 6/2004 Rosenfeld
6,784,948 B2 8/2004 Kawashima et al.
6,799,141 B1 9/2004 Stoustrup et al.
6,806,871 B1 10/2004 Yasue
6,927,384 B2 8/2005 Reime et al.
6,940,286 B2 9/2005 Wang et al.
6,965,836 B2 11/2005 Richardson
6,972,753 B1 12/2005 Kimura et al.
6,985,137 B2 1/2006 Kaikuranta
7,042,444 B2 5/2006 Cok
7,084,859 B1 8/2006 Pryor
7,087,907 B1 8/2006 Lalovic et al.
7,133,031 B2 11/2006 Wang et al.
7,176,904 B2 2/2007 Satoh
7,199,932 B2 4/2007 Sugiura
7,359,041 B2 4/2008 Xie et al.
7,397,418 B1 7/2008 Doerry et al.
7,432,893 B2 10/2008 Ma et al.
7,435,940 B2 10/2008 Eliasson et al.
7,436,443 B2 10/2008 Hirunuma et al.
7,442,914 B2 10/2008 Eliasson et al.
7,465,914 B2 12/2008 Eliasson et al.
7,528,898 B2 5/2009 Hashimoto
7,613,375 B2 11/2009 Shimizu
7,629,968 B2 12/2009 Miller et al.
7,646,833 B1 1/2010 He et al.
7,653,883 B2 1/2010 Hotelling et al.
7,655,901 B2 2/2010 Idzik et al.
7,705,835 B2 4/2010 Eikman
7,729,056 B2 6/2010 Hwang et al.
7,847,789 B2 12/2010 Kolmykov-Zotov et al.
7,855,716 B2 12/2010 McCreary et al.
7,859,519 B2 12/2010 Tulbert
7,924,272 B2 4/2011 Boer et al.
7,932,899 B2 4/2011 Newton et al.
7,969,410 B2 6/2011 Kakarala

(56) **References Cited**

U.S. PATENT DOCUMENTS

7,995,039 B2 8/2011 Eliasson et al.
8,013,845 B2 9/2011 Ostergaard et al.
8,031,186 B2 10/2011 Ostergaard
8,077,147 B2 12/2011 Krah et al.
8,093,545 B2 1/2012 Leong et al.
8,094,136 B2 1/2012 Eliasson et al.
8,094,910 B2 1/2012 Xu
8,149,211 B2 4/2012 Hayakawa et al.
8,218,154 B2 7/2012 Østergaard et al.
8,274,495 B2 9/2012 Lee
8,319,729 B2 11/2012 Choi et al.
8,325,158 B2 12/2012 Yatsuda et al.
8,339,379 B2 12/2012 Goertz et al.
8,350,827 B2 1/2013 Chung et al.
8,384,010 B2 2/2013 Hong et al.
8,407,606 B1 3/2013 Davidson et al.
8,441,467 B2 5/2013 Han
8,445,834 B2 5/2013 Hong et al.
8,466,901 B2 6/2013 Yen et al.
8,482,547 B2 7/2013 Cobon et al.
8,542,217 B2 9/2013 Wassvik et al.
8,567,257 B2 10/2013 Van Steenberge et al.
8,581,884 B2 11/2013 Fåhraeus et al.
8,624,858 B2 1/2014 Fyke et al.
8,686,974 B2 4/2014 Christiansson et al.
8,692,807 B2 4/2014 Føhraeus et al.
8,716,614 B2 5/2014 Wassvik
8,727,581 B2 5/2014 Saccomanno
8,745,514 B1 6/2014 Davidson
8,780,066 B2 7/2014 Christiansson et al.
8,830,181 B1 9/2014 Clark et al.
8,860,696 B2 10/2014 Wassvik et al.
8,872,098 B2 10/2014 Bergström et al.
8,872,801 B2 10/2014 Bergström et al.
8,884,900 B2 11/2014 Wassvik
8,890,843 B2 11/2014 Wassvik et al.
8,890,849 B2 11/2014 Christiansson et al.
8,928,590 B1 1/2015 El Dokor
8,963,886 B2 2/2015 Wassvik
8,982,084 B2 3/2015 Christiansson et al.
9,001,086 B1 4/2015 Saini
9,024,896 B2 5/2015 Chen
9,024,916 B2 5/2015 Christiansson
9,035,909 B2 5/2015 Christiansson
9,063,614 B2 6/2015 Petterson et al.
9,063,617 B2 6/2015 Eliasson et al.
9,086,763 B2 7/2015 Johansson et al.
9,134,854 B2 9/2015 Wassvik et al.
9,158,401 B2 10/2015 Christiansson
9,158,415 B2 10/2015 Song et al.
9,201,520 B2 12/2015 Benko et al.
9,207,800 B1 12/2015 Eriksson et al.
9,213,445 B2 12/2015 King et al.
9,274,645 B2 3/2016 Christiansson et al.
9,280,237 B2 3/2016 Kukulj
9,291,845 B2 3/2016 Shin et al.
9,317,146 B1 4/2016 Hufnagel
9,317,168 B2 4/2016 Christiansson et al.
9,323,396 B2 4/2016 Han et al.
9,366,565 B2 6/2016 Uvnäs
9,366,802 B2 6/2016 Lee et al.
9,377,884 B2 6/2016 Christiansson et al.
9,389,732 B2 7/2016 Craven-Bartle
9,411,444 B2 8/2016 Christiansson et al.
9,411,464 B2 8/2016 Wallander et al.
9,430,079 B2 8/2016 Christiansson et al.
9,442,574 B2 9/2016 Fåhraeus et al.
9,547,393 B2 1/2017 Christiansson et al.
9,552,103 B2 1/2017 Craven-Bartle et al.
9,557,846 B2 1/2017 Baharav et al.
9,588,619 B2 3/2017 Christiansson et al.
9,594,467 B2 3/2017 Christiansson et al.
9,618,682 B2 4/2017 Yoon et al.
9,626,018 B2 4/2017 Christiansson et al.
9,626,040 B2 4/2017 Wallander et al.
9,639,210 B2 5/2017 Wallander et al.
9,678,602 B2 6/2017 Wallander
9,684,414 B2 6/2017 Christiansson et al.
9,710,101 B2 7/2017 Christiansson et al.
9,874,978 B2 1/2018 Wall
9,983,626 B2 5/2018 Cao et al.
10,013,107 B2 7/2018 Christiansson et al.
10,019,113 B2 7/2018 Christiansson et al.
10,282,035 B2 5/2019 Kocovksi et al.
10,649,585 B1 5/2020 van Beek et al.
2001/0002694 A1 6/2001 Nakazawa et al.
2001/0005004 A1 6/2001 Shiratsuki et al.
2001/0005308 A1 6/2001 Oishi et al.
2001/0030642 A1 10/2001 Sullivan et al.
2002/0067348 A1 6/2002 Masters et al.
2002/0075243 A1 6/2002 Newton
2002/0118177 A1 8/2002 Newton
2002/0158823 A1 10/2002 Zavracky et al.
2002/0158853 A1 10/2002 Sugawara et al.
2002/0163505 A1 11/2002 Takekawa
2003/0016450 A1 1/2003 Bluemel et al.
2003/0034439 A1 2/2003 Reime et al.
2003/0034935 A1 2/2003 Amanai et al.
2003/0048257 A1 3/2003 Mattila
2003/0052257 A1 3/2003 Sumriddetchkajorn
2003/0095399 A1 5/2003 Grenda et al.
2003/0107748 A1 6/2003 Lee
2003/0137494 A1 7/2003 Tulbert
2003/0156100 A1 8/2003 Gettemy
2003/0160155 A1 8/2003 Liess
2003/0210537 A1 11/2003 Engelmann
2003/0214486 A1 11/2003 Roberts
2004/0027339 A1 2/2004 Schulz
2004/0032401 A1 2/2004 Nakazawa et al.
2004/0090432 A1 5/2004 Takahashi et al.
2004/0130338 A1 7/2004 Wang et al.
2004/0174541 A1 9/2004 Freifeld
2004/0201579 A1 10/2004 Graham
2004/0212603 A1 10/2004 Cok
2004/0238627 A1 12/2004 Silverbrook et al.
2004/0239702 A1 12/2004 Kang et al.
2004/0245438 A1 12/2004 Payne et al.
2004/0252091 A1 12/2004 Ma et al.
2004/0252867 A1 12/2004 Lan et al.
2005/0012714 A1 1/2005 Russo et al.
2005/0041013 A1 2/2005 Tanaka
2005/0057903 A1 3/2005 Choi
2005/0073508 A1 4/2005 Pittel et al.
2005/0083293 A1 4/2005 Dixon
2005/0128190 A1 6/2005 Ryynanen
2005/0143923 A1 6/2005 Keers et al.
2005/0156914 A1 7/2005 Lipman et al.
2005/0162398 A1 7/2005 Eliasson et al.
2005/0179977 A1 8/2005 Chui et al.
2005/0200613 A1 9/2005 Kobayashi et al.
2005/0212774 A1 9/2005 Ho et al.
2005/0248540 A1 11/2005 Newton
2005/0253834 A1 11/2005 Sakamaki et al.
2005/0276053 A1 12/2005 Nortrup et al.
2006/0001650 A1 1/2006 Robbins et al.
2006/0001653 A1 1/2006 Smits
2006/0007185 A1 1/2006 Kobayashi
2006/0008164 A1 1/2006 Wu et al.
2006/0017706 A1 1/2006 Cutherell et al.
2006/0017709 A1 1/2006 Okano
2006/0033725 A1 2/2006 Marggraff et al.
2006/0038698 A1 2/2006 Chen
2006/0061861 A1 3/2006 Munro et al.
2006/0114237 A1 6/2006 Crockett et al.
2006/0132454 A1 6/2006 Chen et al.
2006/0139340 A1 6/2006 Geaghan
2006/0158437 A1 7/2006 Blythe et al.
2006/0170658 A1 8/2006 Nakamura et al.
2006/0202974 A1 9/2006 Thielman
2006/0227120 A1 10/2006 Eikman
2006/0255248 A1 11/2006 Eliasson
2006/0256092 A1 11/2006 Lee
2006/0279558 A1 12/2006 Van Delden et al.
2006/0281543 A1 12/2006 Sutton et al.

(56) **References Cited**

U.S. PATENT DOCUMENTS

2006/0290684 A1 12/2006 Giraldo et al.
2007/0014486 A1 1/2007 Schiwietz et al.
2007/0024598 A1 2/2007 Miller et al.
2007/0034783 A1 2/2007 Eliasson et al.
2007/0038691 A1 2/2007 Candes et al.
2007/0052684 A1 3/2007 Gruhlke et al.
2007/0070056 A1 3/2007 Sato et al.
2007/0075648 A1 4/2007 Blythe et al.
2007/0120833 A1 5/2007 Yamaguchi et al.
2007/0125937 A1 6/2007 Eliasson et al.
2007/0152985 A1 7/2007 Ostergaard et al.
2007/0201042 A1 8/2007 Eliasson et al.
2007/0296688 A1 12/2007 Nakamura et al.
2008/0006766 A1 1/2008 Oon et al.
2008/0007540 A1 1/2008 Ostergaard
2008/0007541 A1 1/2008 Eliasson et al.
2008/0007542 A1 1/2008 Eliasson et al.
2008/0011944 A1 1/2008 Chua et al.
2008/0029691 A1 2/2008 Han
2008/0036743 A1 2/2008 Westerman et al.
2008/0062150 A1 3/2008 Lee
2008/0068691 A1 3/2008 Miyatake
2008/0074401 A1 3/2008 Chung et al.
2008/0080811 A1 4/2008 Deane
2008/0088603 A1 4/2008 Eliasson et al.
2008/0121442 A1 5/2008 Boer et al.
2008/0122792 A1 5/2008 Izadi et al.
2008/0122803 A1 5/2008 Izadi et al.
2008/0130979 A1 6/2008 Run et al.
2008/0133265 A1 6/2008 Silkaitis et al.
2008/0150846 A1 6/2008 Chung et al.
2008/0150848 A1 6/2008 Chung et al.
2008/0151126 A1 6/2008 Yu
2008/0158176 A1 7/2008 Land et al.
2008/0189046 A1 8/2008 Eliasson et al.
2008/0192025 A1 8/2008 Jaeger et al.
2008/0238433 A1 10/2008 Joutsenoja et al.
2008/0246388 A1 10/2008 Cheon et al.
2008/0252619 A1 10/2008 Crockett et al.
2008/0266266 A1 10/2008 Kent et al.
2008/0278460 A1 11/2008 Arnett et al.
2008/0284925 A1 11/2008 Han
2008/0291668 A1 11/2008 Aylward et al.
2008/0297482 A1 12/2008 Weiss
2009/0000831 A1 1/2009 Miller et al.
2009/0002340 A1 1/2009 Van Genechten
2009/0006292 A1 1/2009 Block
2009/0040786 A1 2/2009 Mori
2009/0066647 A1 3/2009 Kerr et al.
2009/0067178 A1 3/2009 Huang et al.
2009/0073142 A1 3/2009 Yamashita et al.
2009/0077501 A1 3/2009 Partridge et al.
2009/0085894 A1 4/2009 Gandhi et al.
2009/0091554 A1 4/2009 Keam
2009/0115919 A1 5/2009 Tanaka et al.
2009/0122020 A1 5/2009 Eliasson et al.
2009/0122027 A1 5/2009 Newton
2009/0128508 A1 5/2009 Sohn et al.
2009/0135162 A1 5/2009 Van De Wijdeven et al.
2009/0143141 A1 6/2009 Wells et al.
2009/0153519 A1 6/2009 Suarez Rovere
2009/0161026 A1 6/2009 Wu et al.
2009/0168459 A1 7/2009 Holman et al.
2009/0187842 A1 7/2009 Collins et al.
2009/0189857 A1 7/2009 Benko et al.
2009/0189874 A1 7/2009 Chene et al.
2009/0189878 A1 7/2009 Goertz et al.
2009/0219256 A1 9/2009 Newton
2009/0229892 A1 9/2009 Fisher et al.
2009/0251439 A1 10/2009 Westerman et al.
2009/0256817 A1 10/2009 Perlin et al.
2009/0259967 A1 10/2009 Davidson et al.
2009/0267919 A1 10/2009 Chao et al.
2009/0273794 A1 11/2009 Østergaard et al.
2009/0278816 A1 11/2009 Colson
2009/0297009 A1 12/2009 Xu et al.
2010/0033444 A1 2/2010 Kobayashi
2010/0045629 A1 2/2010 Newton
2010/0060896 A1 3/2010 Van De Wijdeven et al.
2010/0066016 A1 3/2010 Van De Wijdeven et al.
2010/0066704 A1 3/2010 Kasai
2010/0073318 A1 3/2010 Hu et al.
2010/0073327 A1 3/2010 Mau et al.
2010/0078545 A1 4/2010 Leong et al.
2010/0079407 A1 4/2010 Suggs et al.
2010/0079408 A1 4/2010 Leong et al.
2010/0097345 A1 4/2010 Jang et al.
2010/0097348 A1 4/2010 Park et al.
2010/0097353 A1 4/2010 Newton
2010/0103133 A1 4/2010 Park et al.
2010/0125438 A1 5/2010 Audet
2010/0127975 A1 5/2010 Jensen
2010/0134435 A1 6/2010 Kimura et al.
2010/0142823 A1 6/2010 Wang et al.
2010/0187422 A1 7/2010 Kothari et al.
2010/0193259 A1 8/2010 Wassvik
2010/0229091 A1 9/2010 Homma et al.
2010/0238139 A1 9/2010 Goertz et al.
2010/0245292 A1 9/2010 Wu
2010/0265170 A1 10/2010 Norieda
2010/0277436 A1 11/2010 Feng et al.
2010/0283785 A1 11/2010 Satulovsky
2010/0284596 A1 11/2010 Miao et al.
2010/0289754 A1 11/2010 Sleeman et al.
2010/0295821 A1 11/2010 Chang et al.
2010/0302196 A1 12/2010 Han et al.
2010/0302209 A1 12/2010 Large
2010/0302210 A1 12/2010 Han et al.
2010/0302240 A1 12/2010 Lettvin
2010/0315379 A1 12/2010 Allard et al.
2010/0321328 A1 12/2010 Chang et al.
2010/0322550 A1 12/2010 Trott
2011/0043490 A1 2/2011 Powell et al.
2011/0049388 A1 3/2011 Delaney et al.
2011/0050649 A1 3/2011 Newton et al.
2011/0051394 A1 3/2011 Bailey
2011/0068256 A1 3/2011 Hong et al.
2011/0069039 A1 3/2011 Lee et al.
2011/0069807 A1 3/2011 Dennerlein et al.
2011/0074725 A1 3/2011 Westerman et al.
2011/0074734 A1 3/2011 Wassvik et al.
2011/0074735 A1 3/2011 Wassvik et al.
2011/0080361 A1 4/2011 Miller et al.
2011/0084939 A1 4/2011 Gepner et al.
2011/0090176 A1 4/2011 Christiansson et al.
2011/0102374 A1 5/2011 Wassvik et al.
2011/0115748 A1 5/2011 Xu
2011/0121323 A1 5/2011 Wu et al.
2011/0122075 A1 5/2011 Seo et al.
2011/0122091 A1 5/2011 King et al.
2011/0122094 A1 5/2011 Tsang et al.
2011/0134079 A1 6/2011 Stark
2011/0141062 A1 6/2011 Yu et al.
2011/0147569 A1 6/2011 Drumm
2011/0157095 A1 6/2011 Drumm
2011/0157096 A1 6/2011 Drumm
2011/0163996 A1 7/2011 Wassvik et al.
2011/0163997 A1 7/2011 Kim
2011/0163998 A1 7/2011 Goertz et al.
2011/0169780 A1 7/2011 Goertz et al.
2011/0175852 A1 7/2011 Goertz et al.
2011/0205186 A1 8/2011 Newton et al.
2011/0205189 A1 8/2011 Newton
2011/0216042 A1 9/2011 Wassvik et al.
2011/0221705 A1 9/2011 Yi et al.
2011/0221997 A1 9/2011 Kim et al.
2011/0227036 A1 9/2011 Vaufrey
2011/0227874 A1 9/2011 Fåhraeus et al.
2011/0234537 A1 9/2011 Kim et al.
2011/0254864 A1 10/2011 Tsuchikawa et al.
2011/0261020 A1 10/2011 Song et al.
2011/0267296 A1 11/2011 Noguchi et al.
2011/0291989 A1 12/2011 Lee
2011/0298743 A1 12/2011 Machida et al.

(56) **References Cited**

U.S. PATENT DOCUMENTS

2011/0309325 A1 12/2011 Park et al.
2011/0310045 A1 12/2011 Toda et al.
2011/0316005 A1 12/2011 Murao et al.
2012/0019448 A1 1/2012 Pitkanen et al.
2012/0026408 A1 2/2012 Lee et al.
2012/0038593 A1 2/2012 Rönkä et al.
2012/0056807 A1 3/2012 Chapman et al.
2012/0062474 A1 3/2012 Weishaupt et al.
2012/0062492 A1 3/2012 Katoh
2012/0068973 A1 3/2012 Christiansson et al.
2012/0086673 A1 4/2012 Chien et al.
2012/0089348 A1 4/2012 Perlin et al.
2012/0110447 A1 5/2012 Chen
2012/0131490 A1 5/2012 Lin et al.
2012/0141001 A1 6/2012 Zhang et al.
2012/0146930 A1 6/2012 Lee
2012/0153134 A1 6/2012 Bergström et al.
2012/0154338 A1 6/2012 Bergström et al.
2012/0162142 A1 6/2012 Christiansson et al.
2012/0162144 A1 6/2012 Fåhraeus et al.
2012/0169672 A1 7/2012 Christiansson
2012/0170056 A1 7/2012 Jakobsen et al.
2012/0181419 A1 7/2012 Momtahan
2012/0182266 A1 7/2012 Han
2012/0188206 A1 7/2012 Sparf et al.
2012/0191993 A1 7/2012 Drader et al.
2012/0200532 A1 8/2012 Powell et al.
2012/0200538 A1 8/2012 Christiansson et al.
2012/0212441 A1 8/2012 Christiansson et al.
2012/0212457 A1 8/2012 Drumm
2012/0217882 A1 8/2012 Wong et al.
2012/0218229 A1 8/2012 Drumm
2012/0223916 A1 9/2012 Kukulj
2012/0249478 A1 10/2012 Chang et al.
2012/0256882 A1 10/2012 Christiansson et al.
2012/0268403 A1 10/2012 Christiansson
2012/0268427 A1 10/2012 Slobodin
2012/0274559 A1 11/2012 Mathai et al.
2012/0305755 A1 12/2012 Hong et al.
2012/0313865 A1 12/2012 Pearce
2013/0021300 A1 1/2013 Wassvik
2013/0021302 A1 1/2013 Drumm
2013/0027404 A1 1/2013 Sarnoff
2013/0044073 A1 2/2013 Christiansson et al.
2013/0055080 A1 2/2013 Komer et al.
2013/0076697 A1 3/2013 Goertz et al.
2013/0082980 A1 4/2013 Gruhlke et al.
2013/0106709 A1 5/2013 Simmons
2013/0107569 A1 5/2013 Suganuma
2013/0113715 A1 5/2013 Grant et al.
2013/0120320 A1 5/2013 Liu et al.
2013/0125016 A1 5/2013 Pallakoff et al.
2013/0127790 A1 5/2013 Wassvik
2013/0135258 A1 5/2013 King et al.
2013/0135259 A1 5/2013 King et al.
2013/0141388 A1 6/2013 Ludwig et al.
2013/0141395 A1 6/2013 Holmgren et al.
2013/0154983 A1 6/2013 Christiansson et al.
2013/0155027 A1 6/2013 Holmgren et al.
2013/0155655 A1 6/2013 Lee et al.
2013/0158504 A1 6/2013 Ruchti et al.
2013/0181896 A1 7/2013 Gruhlke et al.
2013/0181953 A1 7/2013 Hinckley et al.
2013/0187891 A1 7/2013 Eriksson et al.
2013/0201142 A1 8/2013 Suarez Rovere
2013/0222344 A1 8/2013 Lu et al.
2013/0222346 A1 8/2013 Chen et al.
2013/0234991 A1 9/2013 Sparf
2013/0241887 A1 9/2013 Sharma
2013/0249833 A1 9/2013 Christiansson et al.
2013/0257810 A1 10/2013 Niu et al.
2013/0269867 A1 10/2013 Trott
2013/0275082 A1 10/2013 Follmer et al.
2013/0285920 A1 10/2013 Colley
2013/0285968 A1 10/2013 Christiansson et al.
2013/0300714 A1 11/2013 Goh et al.
2013/0300716 A1 11/2013 Craven-Bartle et al.
2013/0307795 A1 11/2013 Suarez Rovere
2013/0321740 A1 12/2013 An et al.
2013/0342490 A1 12/2013 Wallander et al.
2014/0002400 A1 1/2014 Christiansson et al.
2014/0015803 A1 1/2014 Drumm
2014/0028575 A1 1/2014 Parivar et al.
2014/0028604 A1 1/2014 Morinaga et al.
2014/0028629 A1 1/2014 Drumm et al.
2014/0036203 A1 2/2014 Guillou et al.
2014/0055421 A1 2/2014 Christiansson et al.
2014/0063853 A1 3/2014 Nichol et al.
2014/0071653 A1 3/2014 Thompson et al.
2014/0085241 A1 3/2014 Christiansson et al.
2014/0092052 A1 4/2014 Grunthaner et al.
2014/0098032 A1 4/2014 Ng et al.
2014/0098058 A1 4/2014 Baharav et al.
2014/0109219 A1 4/2014 Rohrweck et al.
2014/0125633 A1 5/2014 Fåhraeus et al.
2014/0139467 A1 5/2014 Ghosh et al.
2014/0152624 A1 6/2014 Piot et al.
2014/0160762 A1 6/2014 Dudik et al.
2014/0192023 A1 7/2014 Hoffman
2014/0210793 A1 7/2014 Eriksson et al.
2014/0226084 A1 8/2014 Utukuri et al.
2014/0232669 A1 8/2014 Ohlsson et al.
2014/0237401 A1 8/2014 Krus et al.
2014/0237408 A1 8/2014 Ohlsson et al.
2014/0237422 A1 8/2014 Ohlsson et al.
2014/0253520 A1 9/2014 Cueto et al.
2014/0253831 A1 9/2014 Craven-Bartle
2014/0259029 A1 9/2014 Choi et al.
2014/0267124 A1 9/2014 Christiansson et al.
2014/0292701 A1 10/2014 Christiansson et al.
2014/0300572 A1 10/2014 Ohlsson et al.
2014/0320460 A1 10/2014 Johansson et al.
2014/0347325 A1 11/2014 Wallander et al.
2014/0362046 A1 12/2014 Yoshida
2014/0368471 A1 12/2014 Christiansson et al.
2014/0375607 A1 12/2014 Christiansson et al.
2015/0002386 A1 1/2015 Mankowski et al.
2015/0009687 A1 1/2015 Lin
2015/0015497 A1 1/2015 Leigh
2015/0035774 A1 2/2015 Christiansson et al.
2015/0035803 A1 2/2015 Wassvik et al.
2015/0053850 A1 2/2015 Uvnäs
2015/0054759 A1 2/2015 Christiansson et al.
2015/0083891 A1 3/2015 Wallander
2015/0103013 A9 4/2015 Huang
2015/0121691 A1 5/2015 Wang
2015/0130769 A1 5/2015 Bjö rklund
2015/0131010 A1 5/2015 Sugiyama
2015/0138105 A1 5/2015 Christiansson et al.
2015/0138158 A1 5/2015 Wallander et al.
2015/0138161 A1 5/2015 Wassvik
2015/0199071 A1 7/2015 Hou
2015/0205441 A1 7/2015 Bergström et al.
2015/0215450 A1 7/2015 Seo et al.
2015/0242055 A1 8/2015 Wallander
2015/0256658 A1 9/2015 Shin et al.
2015/0261323 A1 9/2015 Cui et al.
2015/0271481 A1 9/2015 Guthrie et al.
2015/0286698 A1 10/2015 Gagnier et al.
2015/0317036 A1 11/2015 Johansson et al.
2015/0324028 A1 11/2015 Wassvik et al.
2015/0331544 A1 11/2015 Bergström et al.
2015/0331545 A1 11/2015 Wassvik et al.
2015/0331546 A1 11/2015 Craven-Bartle et al.
2015/0331547 A1 11/2015 Wassvik et al.
2015/0332655 A1 11/2015 Krus et al.
2015/0339000 A1 11/2015 Lee et al.
2015/0346856 A1 12/2015 Wassvik
2015/0346911 A1 12/2015 Christiansson
2015/0363042 A1 12/2015 Krus et al.
2015/0373864 A1 12/2015 Jung
2016/0004898 A1 1/2016 Holz
2016/0026297 A1 1/2016 Shinkai et al.
2016/0026337 A1 1/2016 Wassvik et al.

(56) **References Cited**

U.S. PATENT DOCUMENTS

2016/0034099	A1	2/2016	Christiansson et al.
2016/0041629	A1	2/2016	Rao et al.
2016/0050746	A1	2/2016	Wassvik et al.
2016/0062549	A1	3/2016	Drumm et al.
2016/0070415	A1	3/2016	Christiansson et al.
2016/0070416	A1	3/2016	Wassvik
2016/0092021	A1	3/2016	Tu et al.
2016/0103026	A1	4/2016	Povazay et al.
2016/0117019	A1	4/2016	Michiaki
2016/0124546	A1	5/2016	Chen et al.
2016/0124551	A1	5/2016	Christiansson et al.
2016/0077616	A1	6/2016	Durojaiye et al.
2016/0154531	A1	6/2016	Wall
2016/0154532	A1	6/2016	Campbell
2016/0154533	A1	6/2016	Eriksson et al.
2016/0179261	A1	6/2016	Drumm
2016/0202841	A1	7/2016	Christiansson et al.
2016/0209886	A1	7/2016	Suh et al.
2016/0216844	A1	7/2016	Bergström
2016/0224144	A1	8/2016	Klinghult et al.
2016/0255713	A1	9/2016	Kim et al.
2016/0295711	A1	10/2016	Ryu et al.
2016/0299583	A1	10/2016	Watanabe
2016/0299593	A1	10/2016	Christiansson et al.
2016/0306501	A1	10/2016	Drumm et al.
2016/0328090	A1	11/2016	Klinghult
2016/0328091	A1	11/2016	Wassvik et al.
2016/0334942	A1	11/2016	Wassvik
2016/0342282	A1	11/2016	Wassvik
2016/0357348	A1	12/2016	Wallander
2017/0010688	A1	1/2017	Fahraeus et al.
2017/0031516	A1	2/2017	Sugiyama et al.
2017/0090090	A1	3/2017	Craven-Bartle et al.
2017/0102827	A1	4/2017	Christiansson et al.
2017/0115235	A1	4/2017	Ohlsson et al.
2017/0115823	A1	4/2017	Huang et al.
2017/0123257	A1	5/2017	Zhao
2017/0139541	A1	5/2017	Christiansson et al.
2017/0160871	A1	6/2017	Drumm
2017/0177163	A1	6/2017	Wallander et al.
2017/0185230	A1	6/2017	Wallander et al.
2017/0220204	A1	8/2017	Huang et al.
2017/0293392	A1	10/2017	Christiansson et al.
2017/0344185	A1	11/2017	Ohlsson et al.
2018/0031753	A1	2/2018	Craven-Bartle et al.
2018/0107373	A1	4/2018	Cheng
2018/0129354	A1	5/2018	Christiansson et al.
2018/0136788	A1	5/2018	He et al.
2018/0149792	A1	5/2018	Lee et al.
2018/0210572	A1	7/2018	Wallander et al.
2018/0225006	A1	8/2018	Wall
2018/0253187	A1	9/2018	Christiansson et al.
2018/0267672	A1	9/2018	Wassvik et al.
2018/0275788	A1	9/2018	Christiansson et al.
2018/0275830	A1	9/2018	Christiansson et al.
2018/0275831	A1	9/2018	Christiansson et al.
2018/0314206	A1	11/2018	Lee et al.
2019/0004668	A1	1/2019	Jeong et al.
2019/0025984	A1	1/2019	Weilbacher et al.
2019/0050074	A1	2/2019	Kocovski
2019/0107923	A1	4/2019	Drumm
2019/0146630	A1	5/2019	Chen et al.
2019/0196658	A1	6/2019	Skagmo et al.
2019/0196659	A1	6/2019	Skagmo et al.
2019/0227670	A1	7/2019	O'Cleirigh et al.
2019/0235701	A1	8/2019	Han et al.
2019/0258353	A1	8/2019	Drumm et al.
2019/0196657	A1	10/2019	Skagmo et al.
2019/0324570	A1	10/2019	Kolundzjia et al.
2019/0377431	A1	12/2019	Drumm
2019/0377435	A1	12/2019	Piot et al.
2020/0012408	A1	1/2020	Drumm et al.
2020/0073509	A1	3/2020	Shih et al.
2020/0098147	A1	3/2020	Ha et al.
2020/0125189	A1	4/2020	Kim et al.
2020/0159382	A1	5/2020	Drumm
2020/0167033	A1	5/2020	Kim et al.
2020/0249777	A1	8/2020	Hou et al.
2020/0310621	A1	10/2020	Piot et al.
2020/0341587	A1	10/2020	Drumm
2020/0348473	A1	11/2020	Drumm
2020/0387237	A1	12/2020	Drumm

FOREIGN PATENT DOCUMENTS

CN	101174191	A	6/2009
CN	101644854	A	2/2010
CN	201437963	U	4/2010
CN	201465071	U	5/2010
CN	101882034		11/2010
CN	102117155	A	7/2011
CN	101019071	B	6/2012
CN	101206550	B	6/2012
CN	202887145	U	4/2013
CN	203189466	U	9/2013
CN	203224848	U	10/2013
CN	203453994	U	2/2014
CN	101075168	B	4/2014
CN	203720812	U	7/2014
CN	203786707	U	8/2014
CN	203786708	U	8/2014
CN	203786708	U	8/2014
CN	203825586	U	9/2014
CN	204288179	U	4/2015
CN	104808843	A	7/2015
CN	205015574	U	2/2016
CN	205384833	U	7/2016
CN	104391611	A	9/2017
DE	3511330	C2	5/1988
DE	68902419	T2	3/1993
DE	69000920	T2	6/1993
DE	19809934	A1	9/1999
DE	10026201	A1	12/2000
DE	10025175	A1	12/2001
DE	102009003990	A1	7/2010
DE	102010000473	A1	8/2010
EP	0845812	B1	6/1998
EP	0600576	B1	10/1998
EP	0931731	A1	7/1999
EP	1798630	A2	6/2007
EP	0897161	B1	10/2007
EP	2088501	A1	8/2009
EP	1512989	B1	9/2009
EP	2077490	A3	1/2010
EP	1126236	B1	12/2010
EP	2314203	A1	4/2011
EP	2325735	A2	5/2011
EP	2339437	A3	10/2011
EP	2442180	A1	4/2012
EP	2466429	A1	6/2012
EP	2479642	A1	7/2012
EP	1457870	B1	8/2012
EP	2565770	A2	3/2013
EP	2765622	A2	8/2014
EP	2778849	A1	9/2014
EP	2515216	A1	3/2016
EP	3535640	A1	9/2019
FR	2172828	A1	10/1973
FR	2617619	B1	1/1990
FR	2614711	B1	3/1992
FR	2617620	B1	9/1992
FR	2676275	A1	11/1992
GB	1380144	A	1/1975
GB	2131544	B	3/1986
GB	2204126	A	11/1988
JP	H05190066	A	7/1993
JP	2000506655	A	5/2000
JP	2000172438	A	6/2000
JP	2000259334	A	9/2000
JP	2000293311	A	10/2000
JP	2003330603	A	11/2003
JP	2005004278	A	1/2005
JP	2008506173	A	2/2008
JP	2011530124	A	12/2011

(56) **References Cited**

FOREIGN PATENT DOCUMENTS

JP	2015158831	A	2/2018
KR	100359400		7/2001
KR	100940435		2/2010
KR	101081586	B1	11/2011
KR	20150125374	A	11/2015
TW	M517370	U	2/2016
WO	WO 1984/003186	A1	8/1984
WO	WO 1999/046602	A1	9/1999
WO	WO 01/127867	A1	4/2001
WO	WO 01/84251	A2	11/2001
WO	WO 02/35460	A1	5/2002
WO	WO 02/077915	A2	10/2002
WO	WO 02/095668	A1	11/2002
WO	WO 03/076870	A1	9/2003
WO	WO 2004/032210	A2	4/2004
WO	WO 2004/081502	A2	9/2004
WO	WO 2004/081956	A2	9/2004
WO	WO 2005/026938	A2	3/2005
WO	WO 2005/029172	A2	3/2005
WO	WO 2005/029395	A2	3/2005
WO	WO 2005/125011	A1	12/2005
WO	WO 2006/095320	A2	9/2006
WO	WO 2006/124551	A2	11/2006
WO	WO 2007/003196	A2	1/2007
WO	WO 2007/058924	A2	5/2007
WO	WO 2007/112742	A1	10/2007
WO	WO 2008/004103	A2	1/2008
WO	WO 2008/007276	A2	1/2008
WO	WO 2008/017077	A2	2/2008
WO	WO 2008/034184	A1	3/2008
WO	WO 2008/039006	A1	4/2008
WO	WO 2008/068607	A2	6/2008
WO	WO 2006/124551	B1	7/2008
WO	WO 2008/017077	A4	2/2009
WO	WO 2009/048365	A1	4/2009
WO	WO 2009/077962	A2	6/2009
WO	WO 2009/102681	A2	8/2009
WO	WO 2009/137355	A2	11/2009
WO	WO 2010/006882	A2	1/2010
WO	WO 2010/006883	A2	1/2010
WO	WO 2010/006884	A2	1/2010
WO	WO 2010/006885	A2	1/2010
WO	WO 2010/006886	A2	1/2010
WO	WO 2010/015408	A1	2/2010
WO	WO 2010/046539	A1	4/2010
WO	WO 2010/056177	A1	5/2010
WO	WO 2010/064983	A2	6/2010
WO	WO 2010/081702	A2	7/2010
WO	WO 2010/112404	A1	10/2010
WO	WO 2010/123809	A2	10/2010
WO	WO 2010/134865	A1	11/2010
WO	WO 2011/028169	A1	3/2011
WO	WO 2011/028170	A1	3/2011
WO	WO 2011/049511	A1	4/2011
WO	WO 2011/049512	A1	4/2011
WO	WO 2011/049513	A1	4/2011
WO	WO 2011/057572	A1	5/2011
WO	WO 2011/078769	A1	6/2011
WO	WO 2011/082477	A1	7/2011
WO	WO 2011/139213	A1	11/2011
WO	WO 2012/002894	A1	1/2012
WO	WO 2012/010078	A1	1/2012
WO	WO 2012/018176	A2	2/2012
WO	WO 2012/05051		4/2012
WO	WO 2012/082055	A1	6/2012
WO	WO 2012/105893	A1	8/2012
WO	WO 2012/121652	A1	9/2012
WO	WO 2012/158105	A2	11/2012
WO	WO 2012/172302	A1	12/2012
WO	WO 2012/176801	A1	12/2012
WO	WO 2013/036192	A1	3/2013
WO	WO 2013/048312	A2	4/2013
WO	WO 2013/055282	A2	4/2013
WO	WO 2013/062471	A2	5/2013
WO	WO 2013/089622	A2	6/2013
WO	WO 2013/115710	A2	8/2013
WO	WO 2013/133756	A1	9/2013
WO	WO 2013/133757	A2	9/2013
WO	WO 2013/176613	A2	11/2013
WO	WO 2013/176614	A2	11/2013
WO	WO 2013/176615	A2	11/2013
WO	WO 2014/044181	A1	3/2014
WO	WO 2014/055809	A1	4/2014
WO	WO 2014/065601		5/2014
WO	WO 2014/086084	A1	6/2014
WO	WO 2014/098742		6/2014
WO	WO 2014/098744	A1	6/2014
WO	WO 2014/104967	A1	7/2014
WO	WO 2014/130515		8/2014
WO	WO 2014/131221		9/2014
WO	WO 2015/123322	A1	8/2015
WO	WO 2015/175586	A1	11/2015
WO	WO 2016/130074	A1	8/2016
WO	WO 2017/099657		6/2017
WO	WO 2018/096430	A1	5/2018
WO	WO 2018/106172	A1	6/2018
WO	WO 2018/106176		6/2018

OTHER PUBLICATIONS

Chou, N., et al., "Generalized pseudo-polar Fourier grids and applications in regfersting optical coherence tomography images," 43rd Asilomar Conference on Signals, Systems and Computers, Nov. 2009, in 5 pages.

Fihn, M., "Touch Panel—Special Edition," Veritas et Visus, Nov. 2011, in 1 page.

Fourmont, K., "Non-Equispaced Fast Fourier Transforms with Applications to Tomography," Journal of Fourier Analysis and Applications, vol. 9, Issue 5, 2003, in 20 pages.

Iizuka, K., "Boundaries, Near-Field Optics, and Near-Field Imaging," Elements of Photonics, vol. 1: In Free Space and Special Media, Wiley & Sons, 2002, in 57 pages.

International Search Report for International App. No. PCT/SE2017/050102, dated Apr. 5, 2017, in 4 pages.

Johnson, M., "Enhanced Optical Touch Input Panel", IBM Technical Disclosure Bulletin, 1985, in 3 pages.

Kak, et al., "Principles of Computerized Tomographic Imaging", Institute of Electrical Engineers, Inc., 1999, in 333 pages.

The Laser Wall, MIT, 1997, http://web.media.mit.edu/~joep/SpectrumWeb/captions/Laser.html.

Liu, J., et al. "Multiple touch points identifying method, involves starting touch screen, driving specific emission tube, and computing and transmitting coordinate of touch points to computer system by direct lines through interface of touch screen," 2007, in 25 pages.

Natterer, F., "The Mathematics of Computerized Tomography", Society for Industrial and Applied Mathematics, 2001, in 240 pages.

Natterer, F., et al. "Fourier Reconstruction," Mathematical Methods in Image Reconstruction, Society for Industrial and Applied Mathematics, 2001, in 12 pages.

Paradiso, J.A., "Several Sensor Approaches that Retrofit Large Surfaces for Interactivity," ACM Ubicomp 2002 Workshop on Collaboration with Interactive Walls and Tables, 2002, in 8 pages.

Tedaldi, M., et al. "Refractive index mapping of layered samples using optical coherence refractometry," Proceedings of SPIE, vol. 7171, 2009, in 8 pages.

Report on the Filing or Determination of an Action Regarding a Patent or Trademark. For U.S. Pat. No. 10,282,035, U.S. District of Delaware, dated Dec. 10, 2019, in 1 page.

Civil Cover Sheet *Flatfrog Laboratories AB* v. *Promethean Ltd. and Promethean Inc.*, dated Dec. 10, 2019, in 1 page.

Complaint for Patent Infringement, *Flatfrog Laboratories AB* v. *Promethean Ltd. and Promethean Inc.*, C.A. No. 19-2246, dated Dec. 10, 2019, in 83 pages.

Executed Summons in a Civil Action to Promethean Inc., C.A. No. 19-2246, dated Dec. 10, 2019 in 2 pages.

Summons in a Civil Action to Promethean Inc., C.A. No. 19-2246, dated Dec. 10, 2019 in 2 pages.

Summons in a Civil Action to Promethean Ltd., C.A. No. 19-2246, dated Dec. 10, 2019 in 2 pages.

(56) **References Cited**

OTHER PUBLICATIONS

Defendants' Answer to Second Amended Complaint and Defendant Promethean Inc.'s Counterclaims Against FlatFrog Laboratories AB., C.A. No. 19-2246, dated May 22, 2020, in 29 pages.
Supplementary European Search Report for European App. No. EP 16759213, dated Oct. 4, 2018, in 9 pages.
Extended European Search Report for European App. No. 16743795.3, dated Sep. 11, 2018, in 5 pages.
International Search Report for International App. No. PCT/SE2017/051224, dated Feb. 23, 2018, in 5 pages.
International Search Report for International App. No. PCT/IB2017/057201, dated Mar. 6, 2018, in 4 pages.
Extended European Search Report in European Application No. 19165019.1, dated Jul. 18, 2019 in 8 pages.
International Preliminary Report on Patentability received in International Application No. PCT/SE2017/051233, dated Jun. 11, 2019, in 6 pages.
International Search Report for International App. No. PCT/SE2018/050070, dated Apr. 25, 2018, in 4 pages.
Extended European Search Report in European Application No. 17750516.1, dated Jul. 16, 2019 in 5 pages.
Extended European Search Report in European Application No. 16873465.5, dated Jun. 25, 2019 in 9 pages.
Extended European Search Report for European App. No. 18772370.5, dated Dec. 9, 2020, in 8 pages.
Extended European Search Report for European App. No. 18772178.2, dated Dec. 10, 2020, in 8 pages.
Defendants' Initial Invalidity Contentions, *Flatfrog Laboratories AB* v. *Promethean Ltd. and Promethean Inc.*, C.A. No. 1:19-cv-02246-MN, dated Apr. 23, 2021, in 26 pages.
Exhibit 1: Invalidity Claim Chart Against U.S. Pat. No. 10,775,935 Based on Prior Public Use and/or Commercial Offer for Sale of Defendant Promethean Inc.'s ActivPanel 4.5 Product, *Flatfrog Laboratories AB* v. *Promethean Ltd. and Promethean Inc.*, C.A. No. 1:19-cv-02246-MN, dated Apr. 23, 2021, in 26 pages.
Exhibit 2: Invalidity Claim Chart Against U.S. Pat. No. 10,775,935 Based on U.S. Patent No. U.S. Pre-Grant Pub. No. 2019/0235701 to Han et al., *Flatfrog Laboratories AB* v. *Promethean Ltd. and Promethean Inc.*, C.A. No. 1:19-cv-02246-MN, dated Apr. 23, 2021, in 26 pages.
Exhibit 3A: Invalidity Claim Chart Against U.S. Pat. No. 10,775,935 Based on U.S. Pat. No. 4,751,379 to Sasaki et al., *Flatfrog Laboratories AB* v. *Promethean Ltd. and Promethean Inc.*, C.A. No. 1:19-cv-02246-MN, dated Apr. 23, 2021, in 26 pages.
Exhibit 3B: Invalidity Claim Chart Against U.S. Pat. No. 10,775,935 Based on U.S. Pat. No. 4,751,379 to Sasaki et al., *Flatfrog Laboratories AB* v. *Promethean Ltd. and Promethean Inc.*, C.A. No. 1:19-cv-02246-MN, dated Apr. 23, 2021, in 26 pages.
Exhibit 3C: Invalidity Claim Chart Against U.S. Pat. No. 10,775,935 Based on U.S. Pat. No. 4,751,379 to Sasaki et al., *Flatfrog Laboratories AB* v. *Promethean Ltd. and Promethean Inc.*, C.A. No. 1:19-cv-02246-MN, dated Apr. 23, 2021, in 26 pages.
Exhibit 4A: Invalidity Claim Chart Against U.S. Pat. No. 10,775,935 Based on U.S. Pre-Grant Pub. No. 2019/0004668 to Jeong et al., *Flatfrog Laboratories AB* v. *Promethean Ltd. and Promethean Inc.*, C.A. No. 1:19-cv-02246-MN, dated Apr. 23, 2021, in 26 pages.
Exhibit 4B: Invalidity Claim Chart Against U.S. Pat. No. 10,775,935 Based on U.S. Pre-Grant Pub. No. 2019/0004668 to Jeong et al., *Flatfrog Laboratories AB* v. *Promethean Ltd. and Promethean Inc.*, C.A. No. 1:19-cv-02246-MN, dated Apr. 23, 2021, in 26 pages.
Exhibit 4C: Invalidity Claim Chart Against U.S. Pat. No. 10,775,935 Based on U.S. Pre-Grant Pub. No. 2019/0004668 to Jeong et al., *Flatfrog Laboratories AB* v. *Promethean Ltd. and Promethean Inc.*, C.A. No. 1:19-cv-02246-MN, dated Apr. 23, 2021, in 26 pages.
Exhibit 5A: Invalidity Claim Chart Against U.S. Pat. No. 10,775,935 Based on U.S. Pat. No. 9,983,626 to Cao et al., *Flatfrog Laboratories AB* v. *Promethean Ltd. and Promethean Inc.*, C.A. No. 1:19-cv-02246-MN, dated Apr. 23, 2021, in 26 pages.
Exhibit 5B: Invalidity Claim Chart Against U.S. Pat. No. 10,775,935 Based on U.S. Pat. No. 9,983,626 to Cao et al., *Flatfrog Laboratories AB* v. *Promethean Ltd. and Promethean Inc.*, C.A. No. 1:19-cv-02246-MN, dated Apr. 23, 2021, in 26 pages.
Exhibit 5C: Invalidity Claim Chart Against U.S. Pat. No. 10,775,935 Based on U.S. Pat. No. 9,983,626 to Cao et al., *Flatfrog Laboratories AB* v. *Promethean Ltd. and Promethean Inc.*, C.A. No. 1:19-cv-02246-MN, dated Apr. 23, 2021, in 26 pages.
Exhibit 6A: Invalidity Claim Chart Against U.S. Pat. No. 10,775,935 Based on U.S. Pre-Grant Pub. No. 2019/0025984 to Weilbacher et al., *Flatfrog Laboratories AB* v. *Promethean Ltd. and Promethean Inc.*, C.A. No. 1:19-cv-02246-MN, dated Apr. 23, 2021, in 26 pages.
Exhibit 6B: Invalidity Claim Chart Against U.S. Pat. No. 10,775,935 Based on U.S. Pre-Grant Pub. No. 2019/0025984 to Weilbacher et al., *Flatfrog Laboratories AB* v. *Promethean Ltd. and Promethean Inc.*, C.A. No. 1:19-cv-02246-MN, dated Apr. 23, 2021, in 26 pages.
Exhibit 6C: Invalidity Claim Chart Against U.S. Pat. No. 10,775,935 Based on U.S. Pre-Grant Pub. No. 2019/0025984 to Weilbacher et al., *Flatfrog Laboratories AB* v. *Promethean Ltd. and Promethean Inc.*, C.A. No. 1:19-cv-02246-MN, dated Apr. 23, 2021, in 26 pages.
Exhibit 7A: Invalidity Claim Chart Against U.S. Pat. No. 10,775,935 Based on U.S. Pat. No. 9,207,800 to Eriksson et al., *Flatfrog Laboratories AB* v. *Promethean Ltd. and Promethean Inc.*, C.A. No. 1:19-cv-02246-MN, dated Apr. 23, 2021, in 26 pages.
Exhibit 7B: Invalidity Claim Chart Against U.S. Pat. No. 10,775,935 Based on U.S. Pat. No. 9,207,800 to Eriksson et al., *Flatfrog Laboratories AB* v. *Promethean Ltd. and Promethean Inc.*, C.A. No. 1:19-cv-02246-MN, dated Apr. 23, 2021, in 26 pages.
Exhibit 7C: Invalidity Claim Chart Against U.S. Pat. No. 10,775,935 Based on U.S. Pat. No. 9,207,800 to Eriksson et al., *Flatfrog Laboratories AB* v. *Promethean Ltd. and Promethean Inc.*, C.A. No. 1:19-cv-02246-MN, dated Apr. 23, 2021, in 26 pages.
Exhibit 8: Invalidity Claim Chart Against U.S. Pat. No. 10,739,916 Based on Prior Public Use and/or Commercial Offer for Sale of Defendant Promethean Inc.'s ActivPanel 4.5 Product, *Flatfrog Laboratories AB* v. *Promethean Ltd. and Promethean Inc.*, C.A. No. 1:19-cv-02246-MN, dated Apr. 23, 2021, in 26 pages.
Exhibit 9: Invalidity Claim Chart Against U.S. Pat. No. 10,739,916 Based on Chinese Utility Model No. CN 203786707 U to Chen et al., *Flatfrog Laboratories AB* v. *Promethean Ltd. and Promethean Inc.*, C.A. No. 1:19-cv-02246-MN, dated Apr. 23, 2021, in 26 pages.
Exhibit 10: Invalidity Claim Chart Against U.S. Pat. No. 10,739,916 Based on International App. Pub. No. WO2014131221 to Chen et al., *Flatfrog Laboratories AB* v. *Promethean Ltd. and Promethean Inc.*, C.A. No. 1:19-cv-02246-MN, dated Apr. 23, 2021, in 26 pages.
Exhibit 11: Invalidity Claim Chart Against U.S. Pat. No. 10,739,916 Based on Chinese Pub. App. No. 104391611 A to Hu et al., *Flatfrog Laboratories AB* v. *Promethean Ltd. and Promethean Inc.*, C.A. No. 1:19-cv-02246-MN, dated Apr. 23, 2021, in 26 pages.
Exhibit 12: Invalidity Claim Chart Against U.S. Pat. No. 10,739,916 Based on Chinese Utility Model No. 203786708 U to Cao, *Flatfrog Laboratories AB* v. *Promethean Ltd. and Promethean Inc.*, C.A. No. 1:19-cv-02246-MN, dated Apr. 23, 2021, in 26 pages.
Exhibit 13: Invalidity Claim Chart Against U.S. Pat. No. 10,739,916 Based on Chinese Utility Model No. 204288179 U to Mo et al., *Flatfrog Laboratories AB* v. *Promethean Ltd. and Promethean Inc.*, C.A. No. 1:19-cv-02246-MN, dated Apr. 23, 2021, in 26 pages.
Defendants' Sur-Reply Claim Construction Brief, *Flatfrog Laboratories AB* v. *Promethean Ltd. and Promethean Inc.*, C.A. No. 1:19-cv-02246-MN, dated Sep. 13, 2021, in 24 pages.
Defendants Promethean Ltd. and Promethean Inc.'s Preliminary Proposed Claim Constructions, *Flatfrog Laboratories AB* v. *Promethean Ltd. and Promethean Inc.*, C.A. No. 1:19-cv-02246-MN, dated May 24, 2021, in 8 pages.
Notice of Service, *Flatfrog Laboratories AB* v. *Promethean Ltd. and Promethean Inc.*, C.A. No. 1:19-cv-02246-MN, dated Apr. 23, 2021, in 2 pages.
ASTM International, "Standard Specification for Heat-Treated Flat Glass-Kind HS, Kind FT Coated and Uncoated Glass," Designation: C 1048-04, in 7 pages.
British Standard, "Glass in building—Thermally toughened soda lime silicate safety glass," EN 12150-1:2000, ISBN 0 580 36171 3, Aug. 15, 2000, in 28 pages.

(56) **References Cited**

OTHER PUBLICATIONS

Joint Claim Construction Brief, *Flatfrog Laboratories AB* v. *Promethean Ltd. and Promethean Inc.*, C.A. No. 1:19-cv-02246-MN, dated Sep. 20, 2021, in 92 pages.
Joint Appendix of Exhibits to Joint Claim Construction Brief, *Flatfrog Laboratories AB* v. *Promethean Ltd. and Promethean Inc.*, C.A. No. 1:19-cv-02246-MN, dated Sep. 20, 2021, in 383 pages, (uploaded in 4 parts, part 1 of 4).
Joint Appendix of Exhibits to Joint Claim Construction Brief, *Flatfrog Laboratories AB* v. *Promethean Ltd. and Promethean Inc.*, C.A. No. 1:19-cv-02246-MN, dated Sep. 20, 2021, in 383 pages, (uploaded in 4 parts, part 2 of 4).
Joint Appendix of Exhibits to Joint Claim Construction Brief, *Flatfrog Laboratories AB* v. *Promethean Ltd. and Promethean Inc.*, C.A. No. 1:19-cv-02246-MN, dated Sep. 20, 2021, in 383 pages, (uploaded in 4 parts, part 3 of 4).
Joint Appendix of Exhibits to Joint Claim Construction Brief, *Flatfrog Laboratories AB* v. *Promethean Ltd. and Promethean Inc.*, C.A. No. 1:19-cv-02246-MN, dated Sep. 20, 2021, in 383 pages, (uploaded in 4 parts, part 4 of 4).

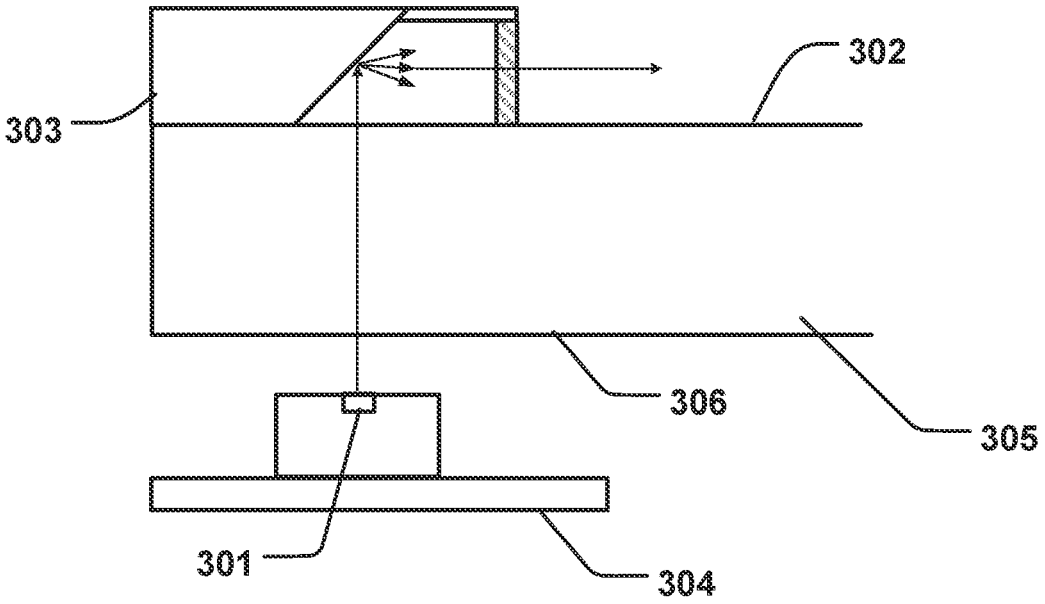

Fig. 1a

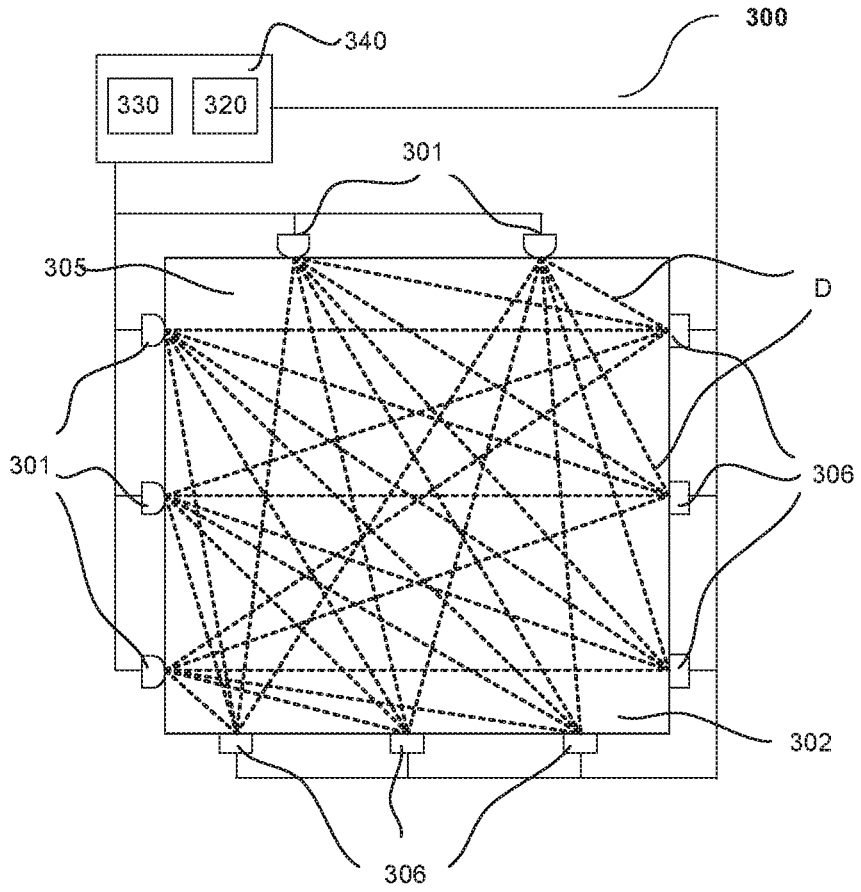

Fig. 1b

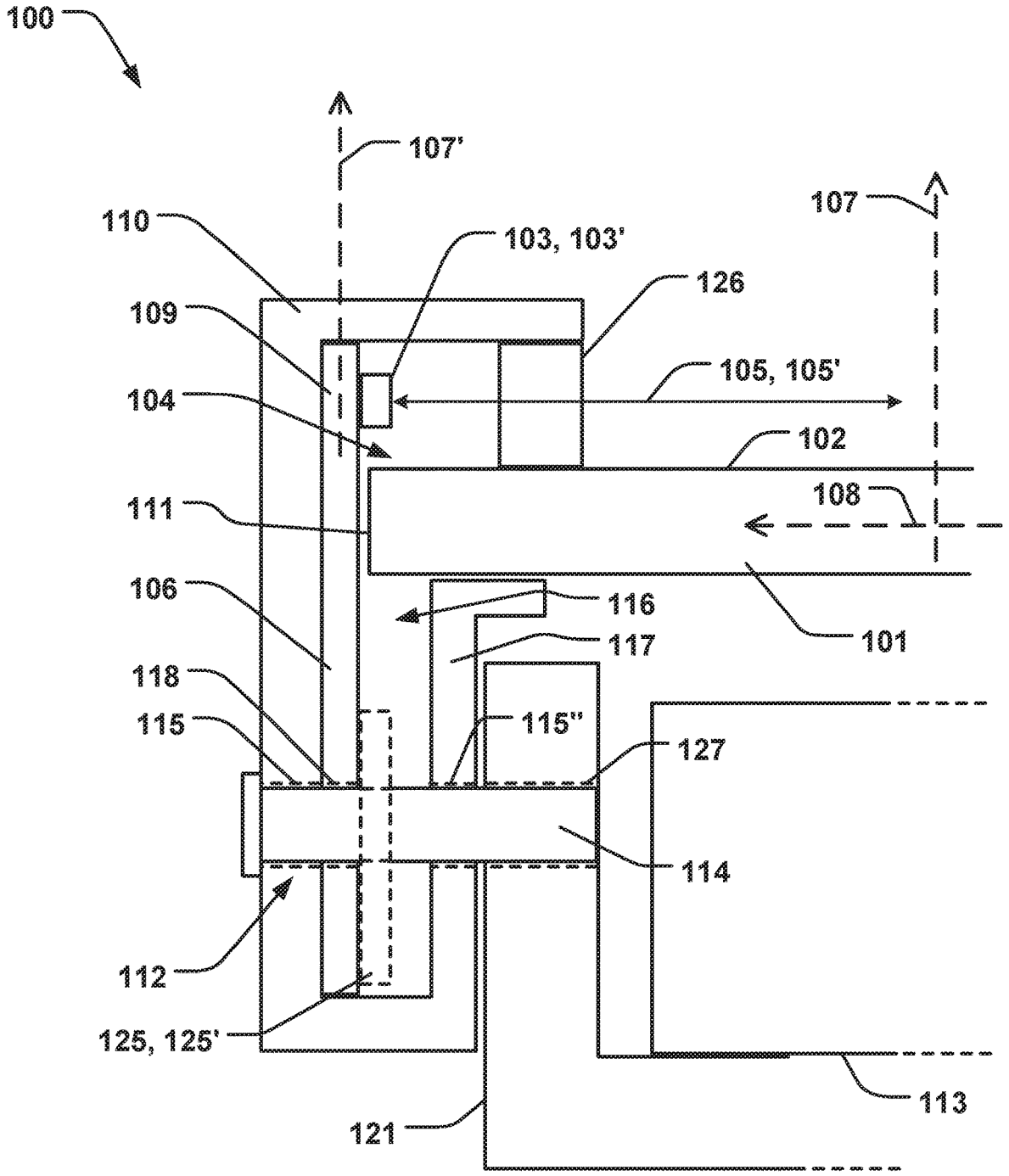
100
107'
107
110
103, 103'
126
109
105, 105'
104
102
108
111
106
116
101
117
118
115
115"
127
114
112
125, 125'
113
121

Fig. 2

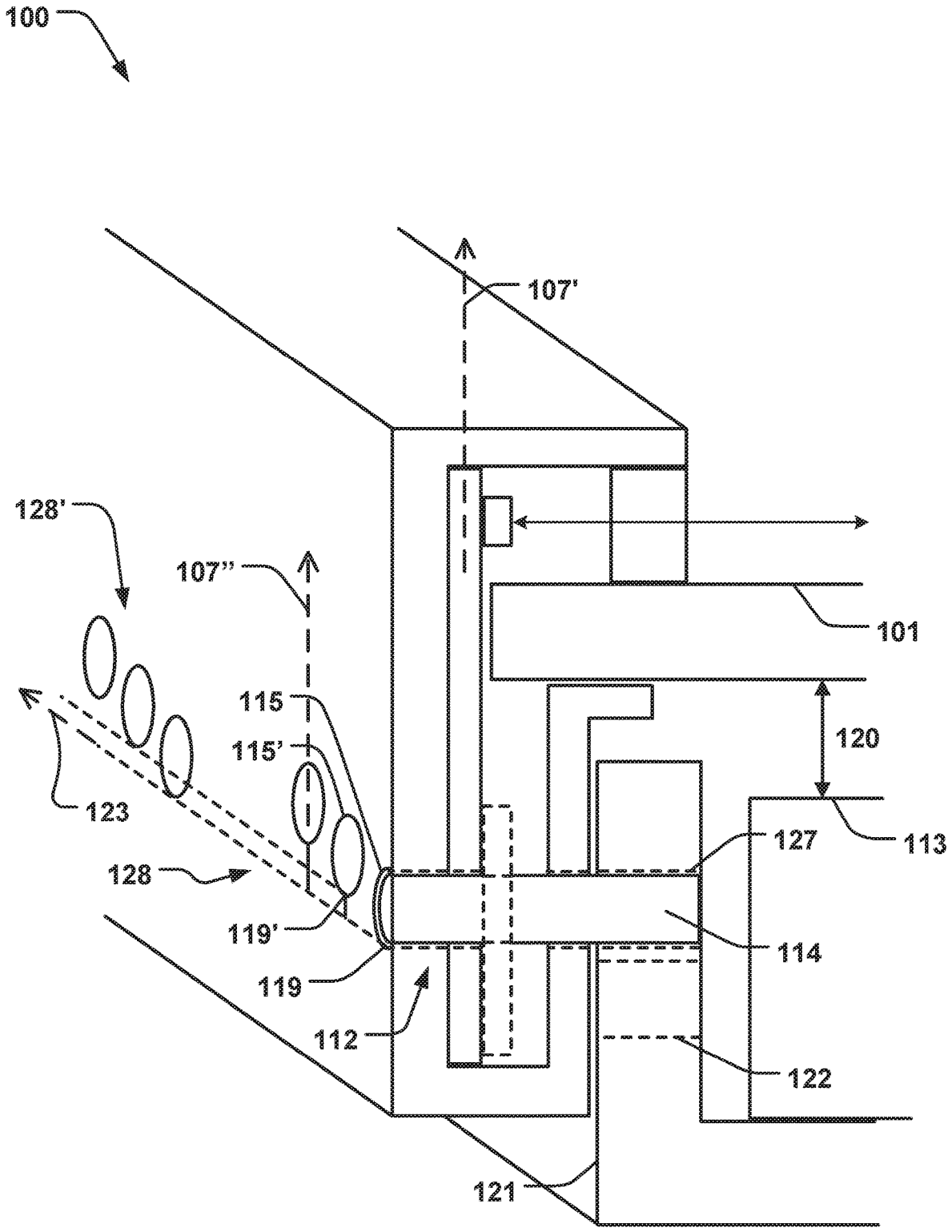
100
107'
128'
107''
101
115
115'
120
123
127
113
128
119'
114
119
112
122
121

Fig. 3

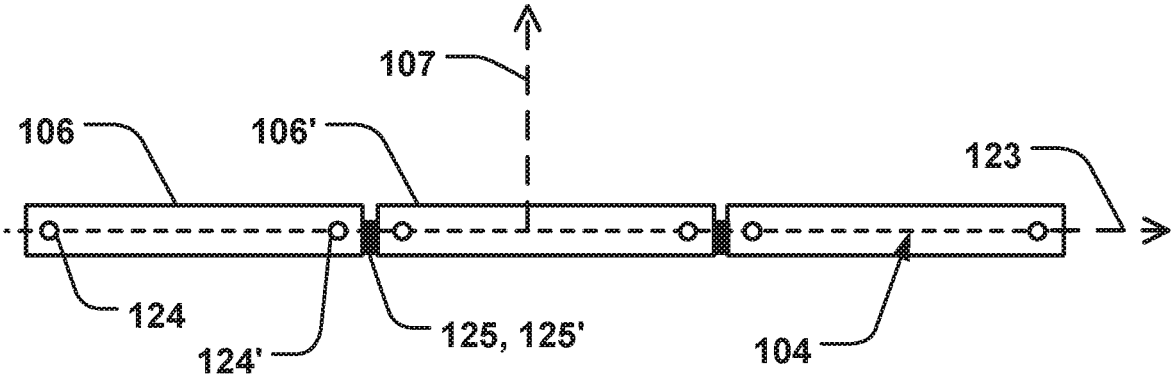

Fig. 4a

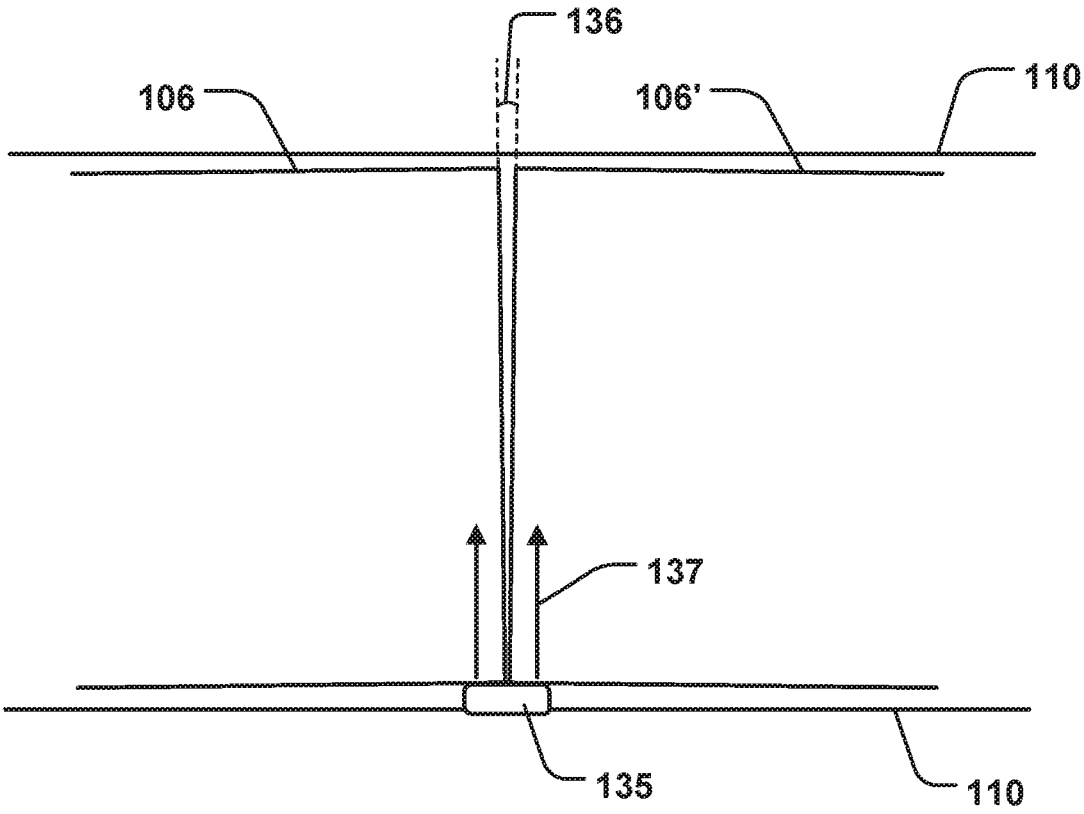

Fig. 4b

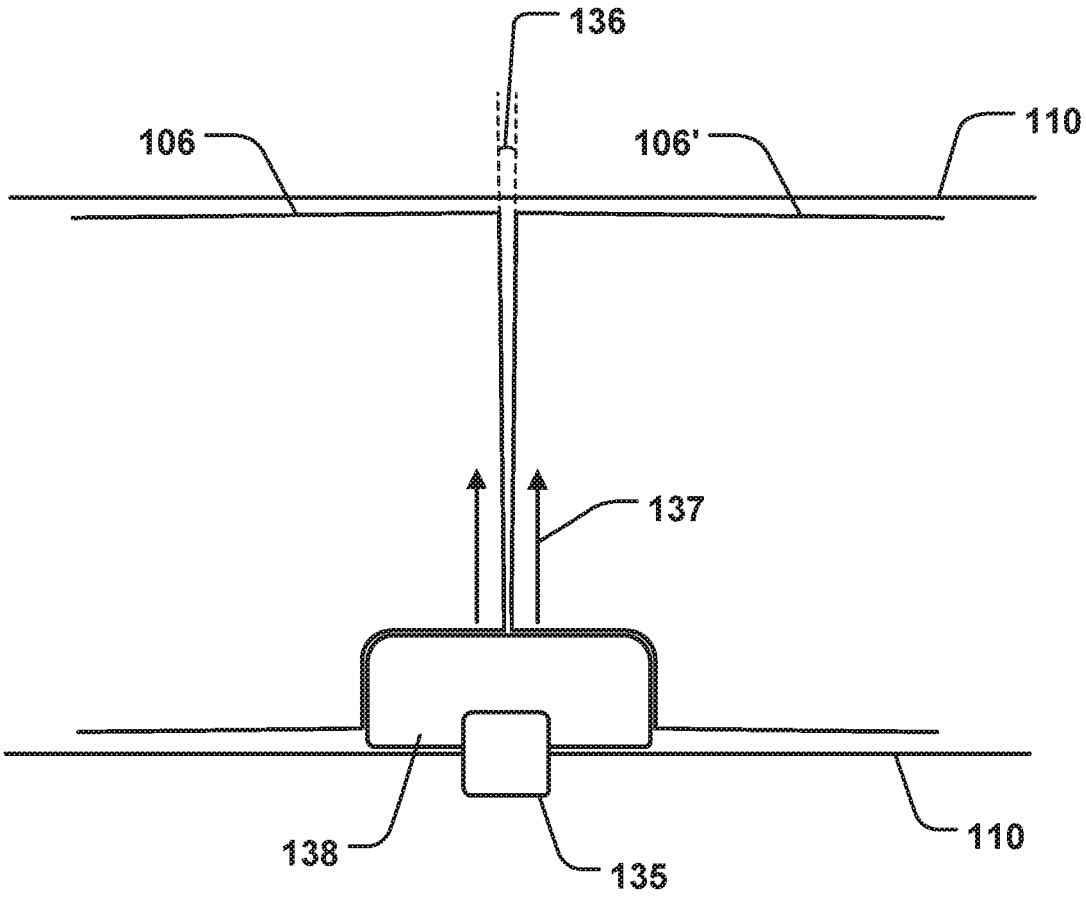

Fig. 4c

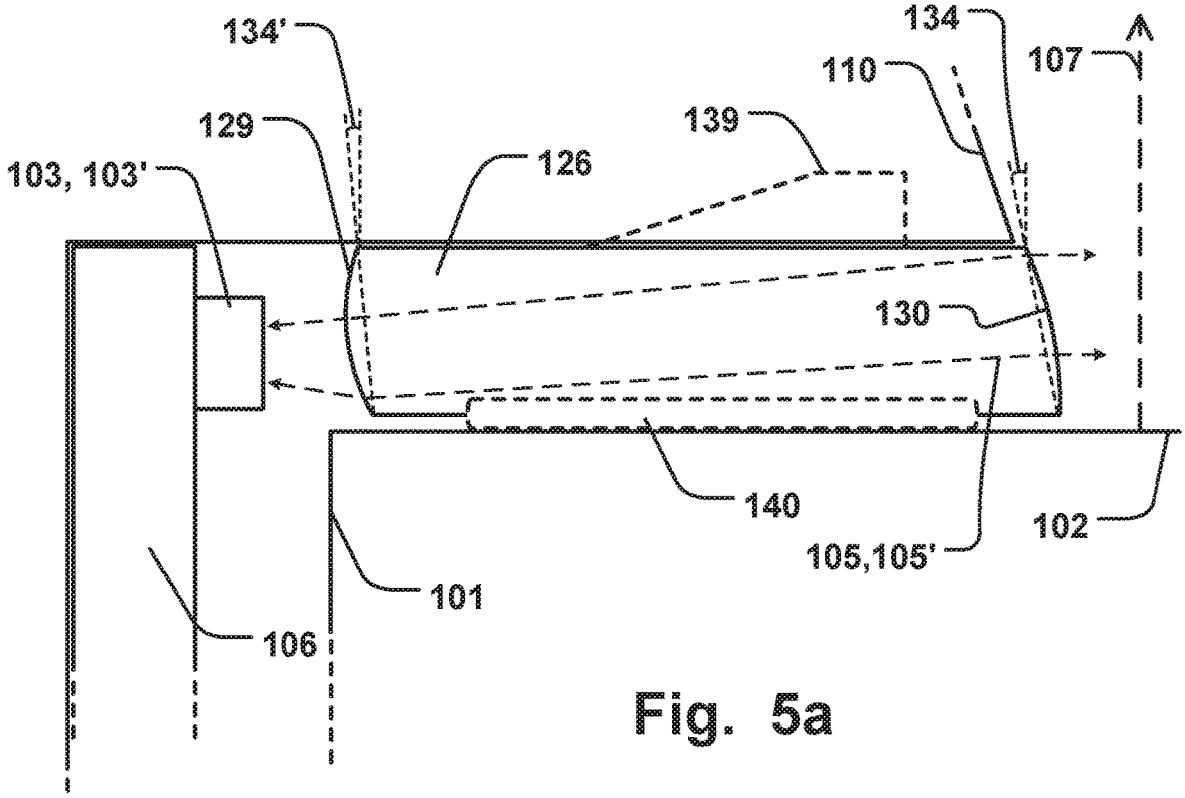
134'
134
110
107
129
139
126
103, 103'
130
140
102
105,105'
101
106

Fig. 5a

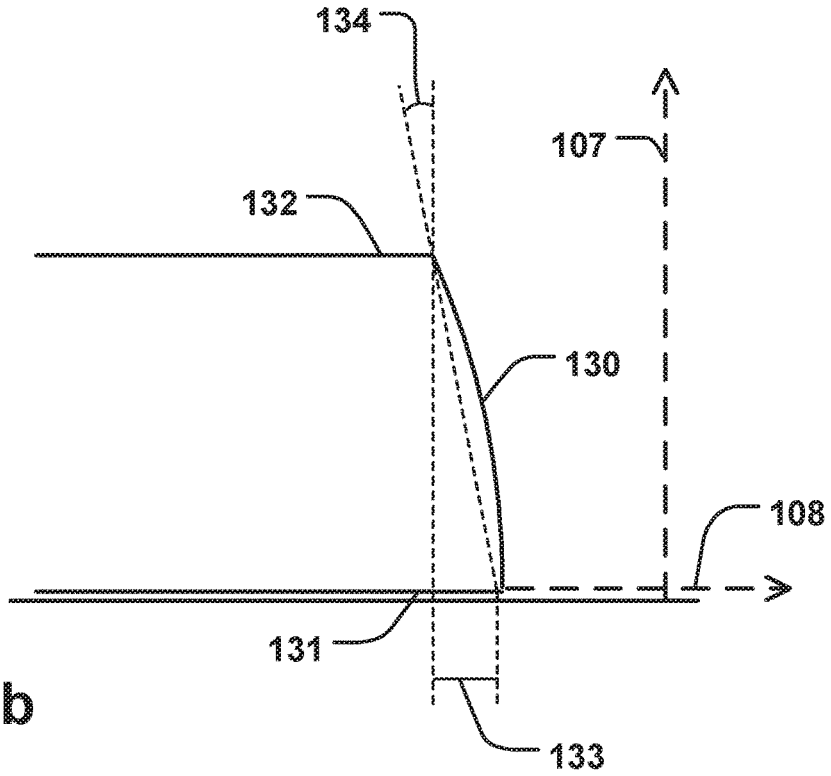
134
107
132
130
108
131
133

Fig. 5b

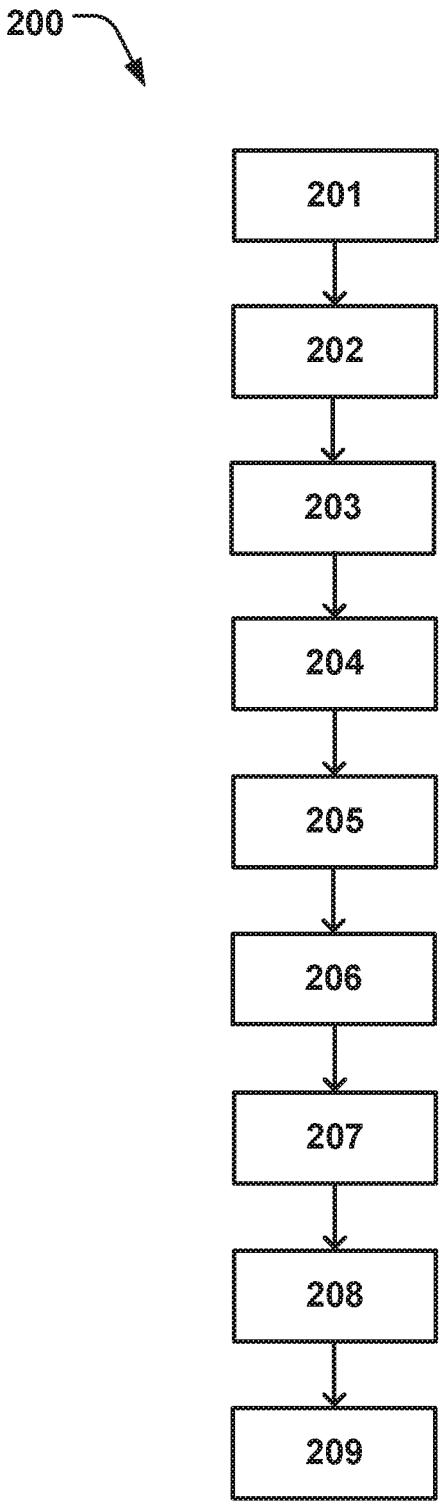

Fig. 6

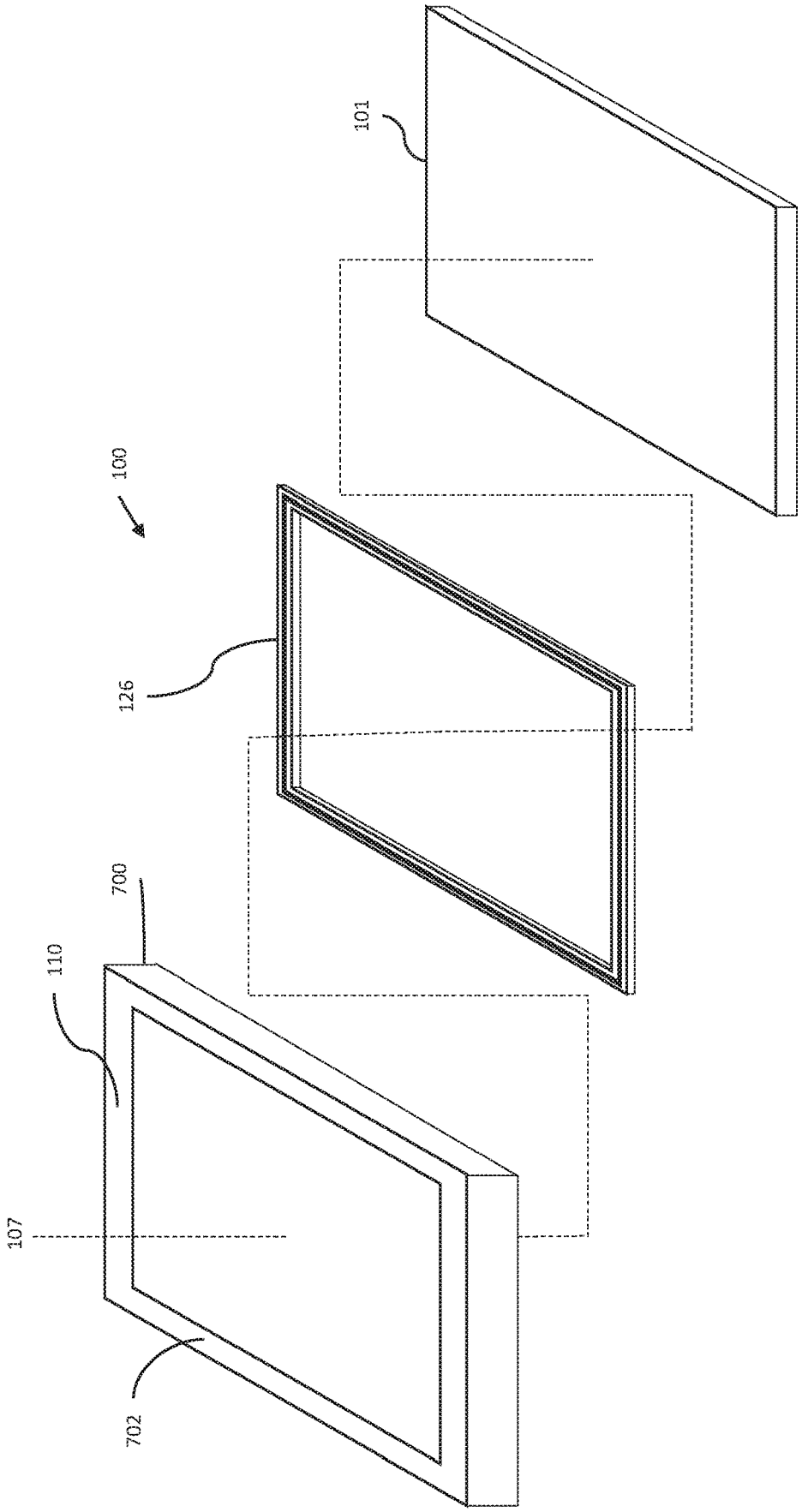

Figure 7

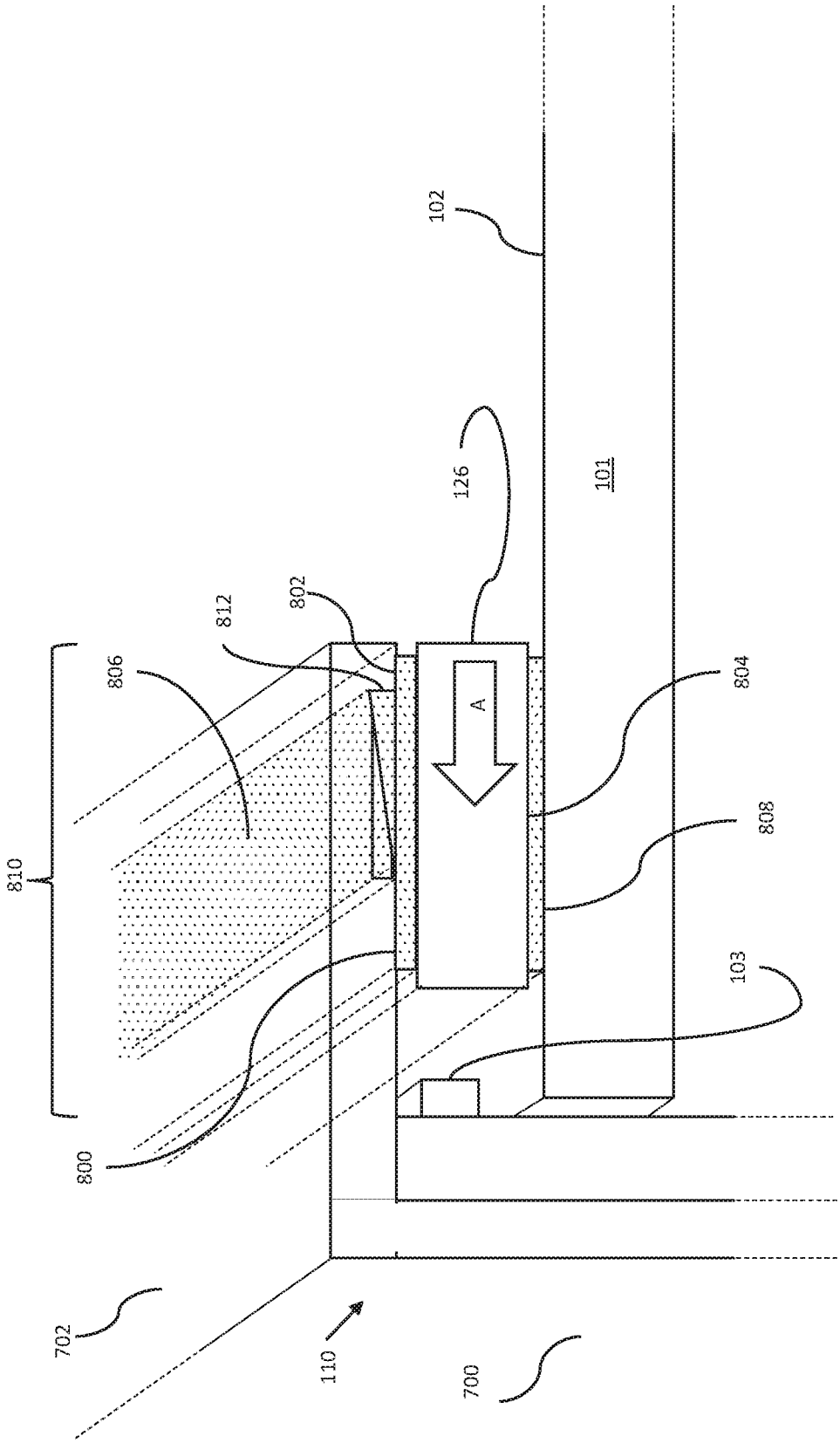

Figure 8

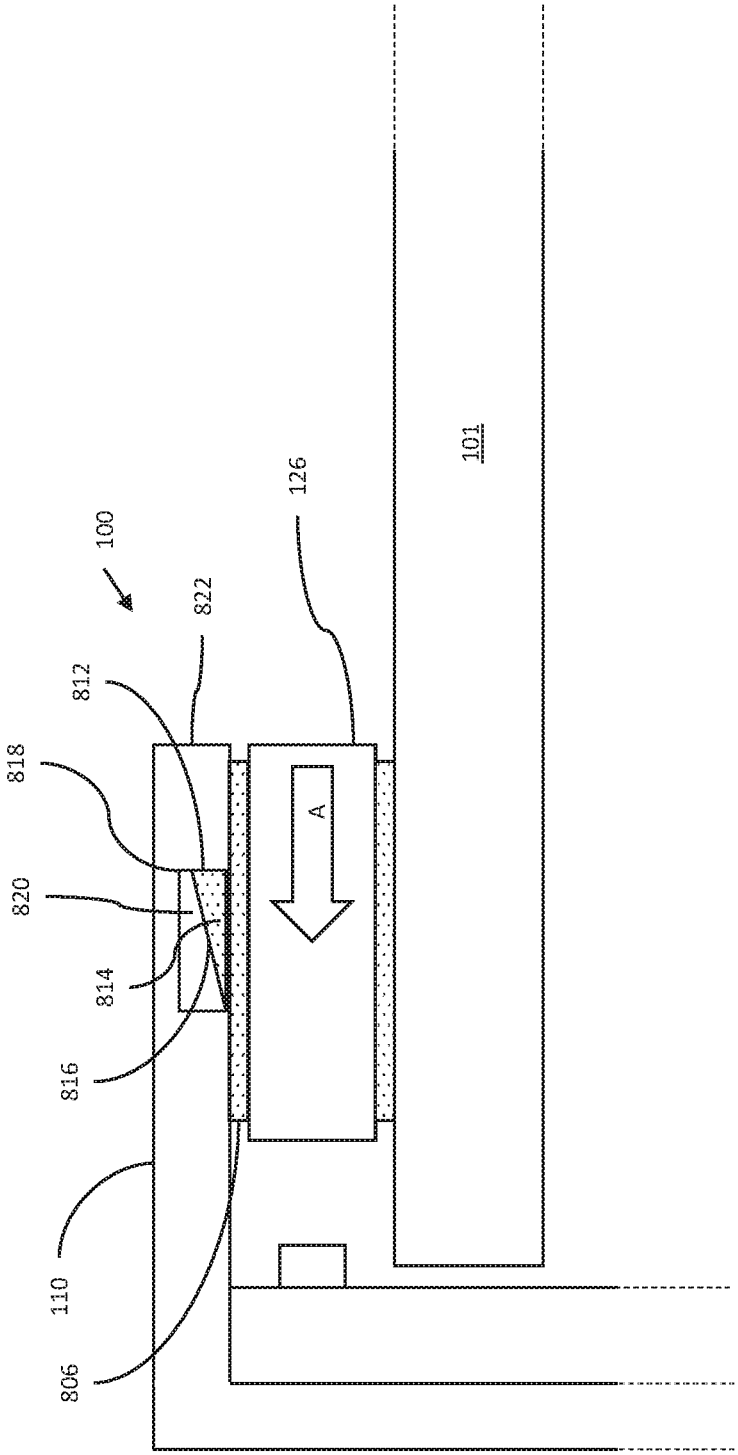

Figure 9

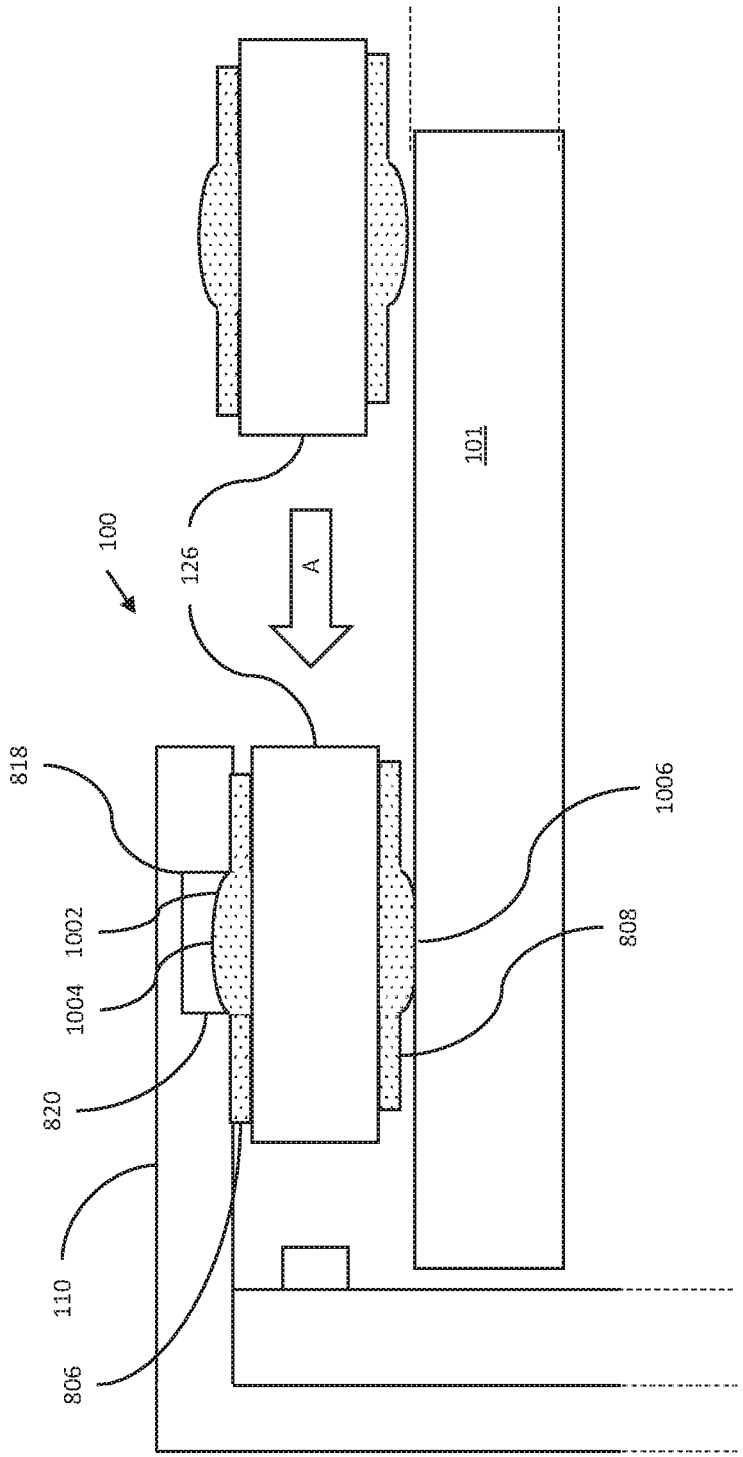

Figure 10

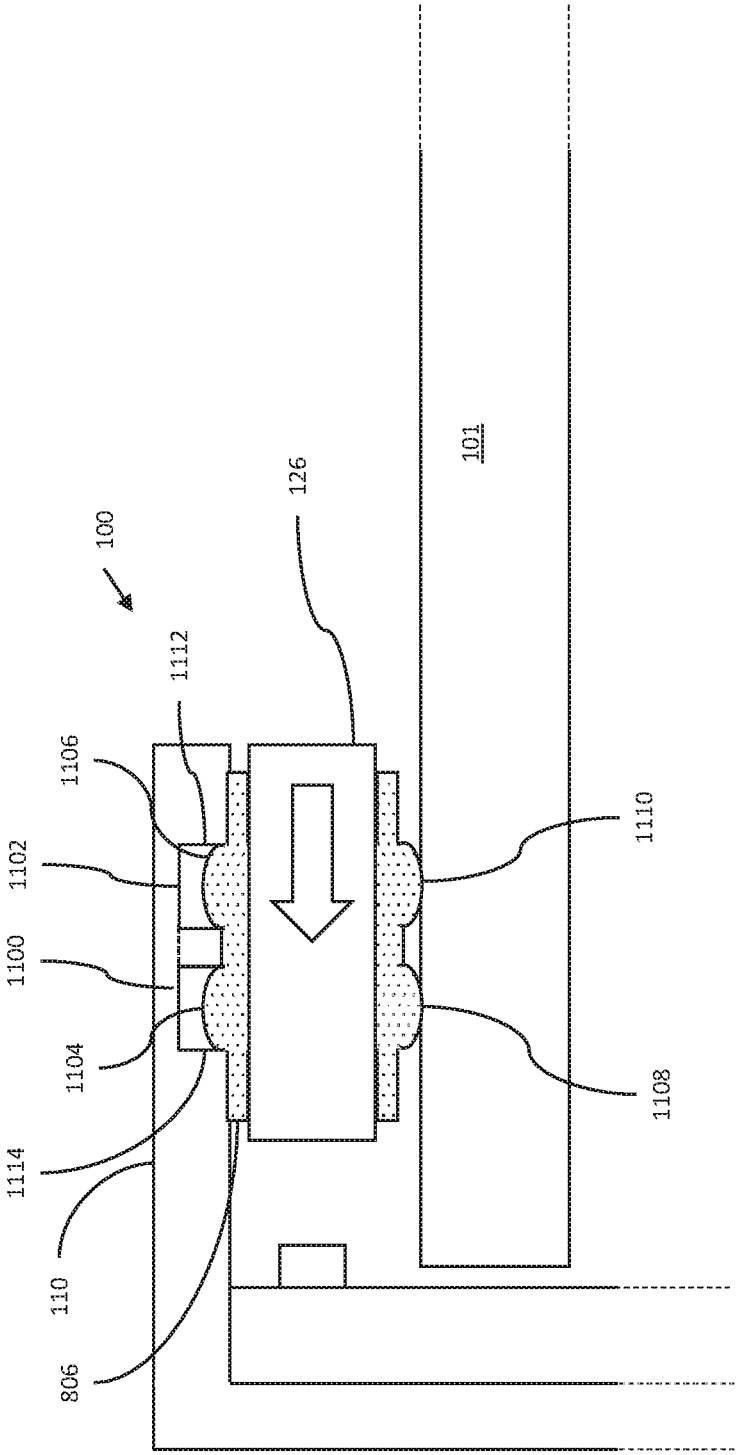

Figure 11

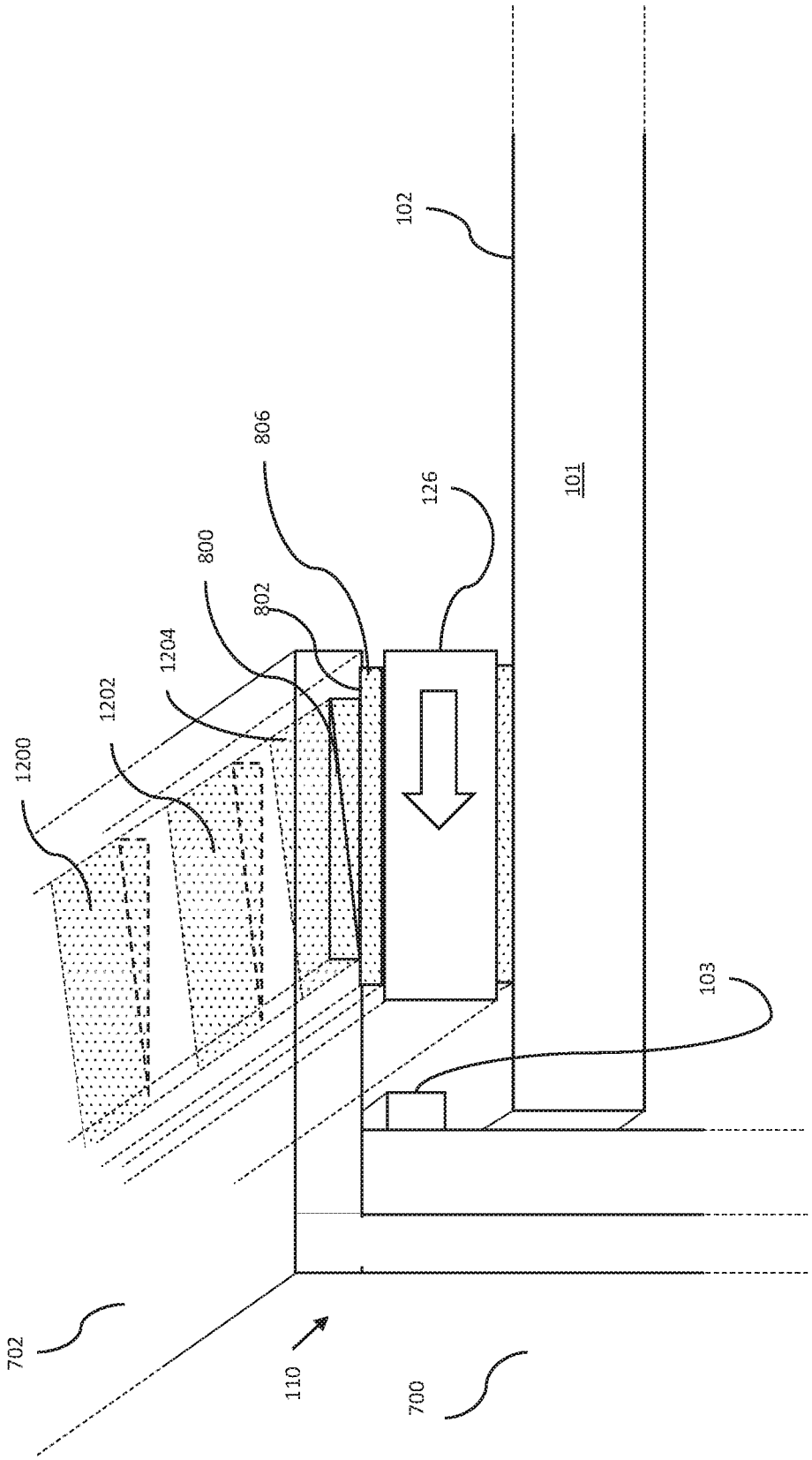

Figure 12

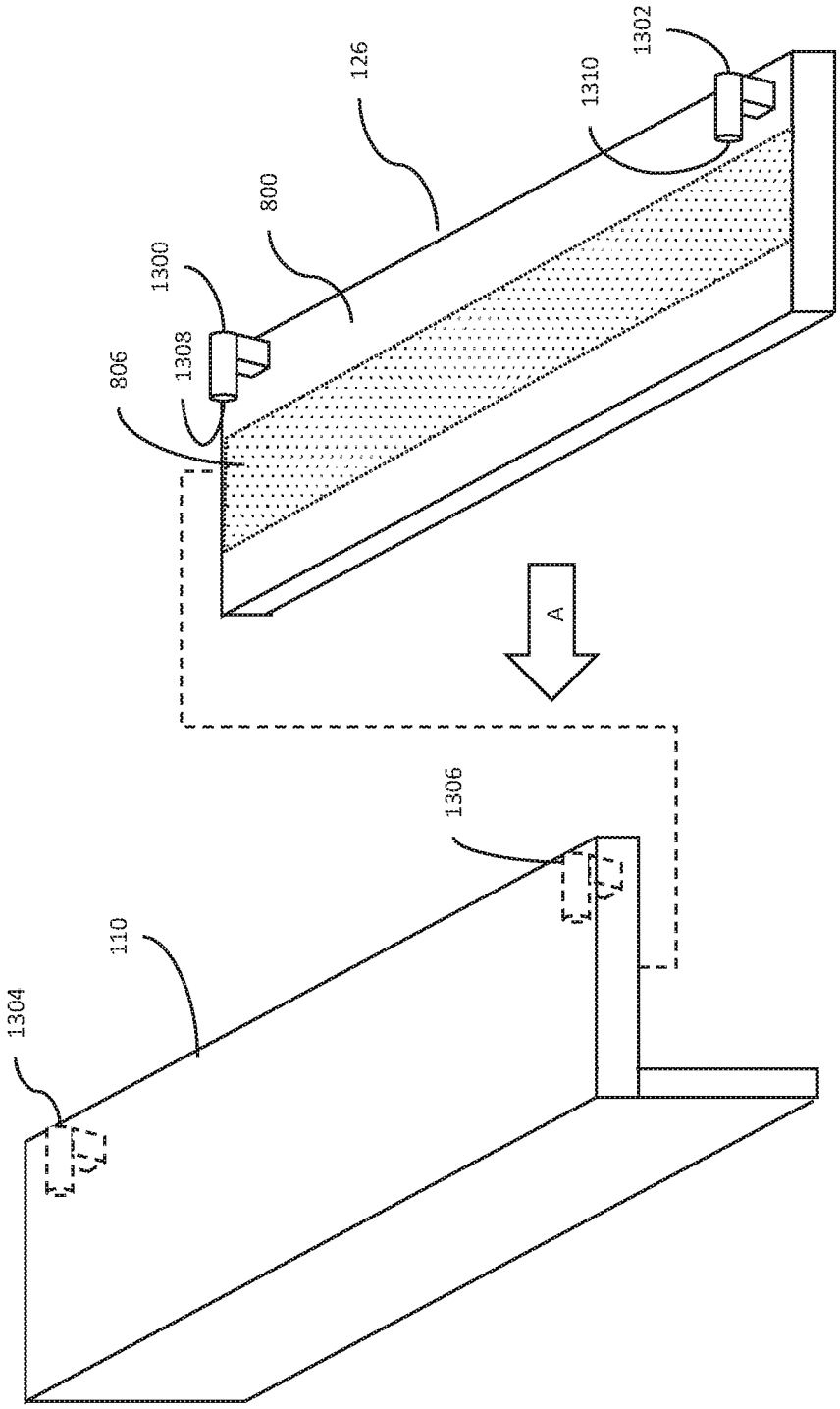

Figure 13

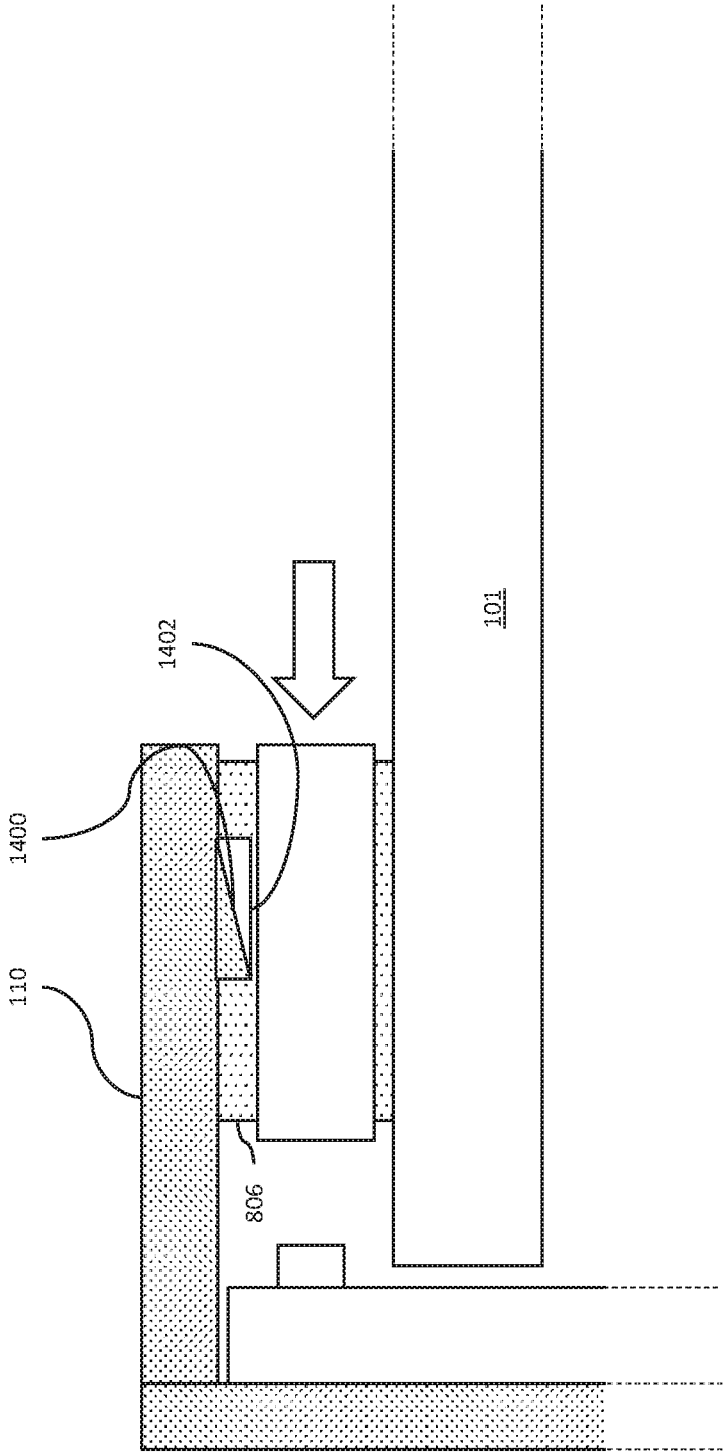

Figure 14

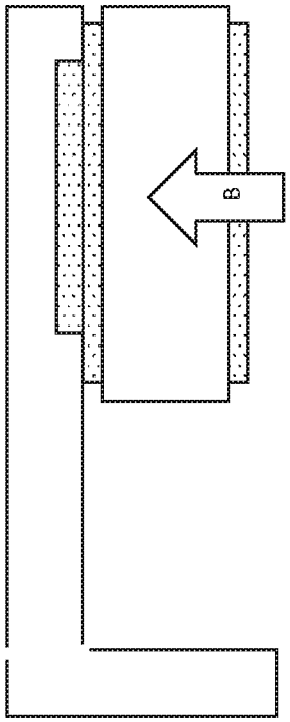

Figure 15b

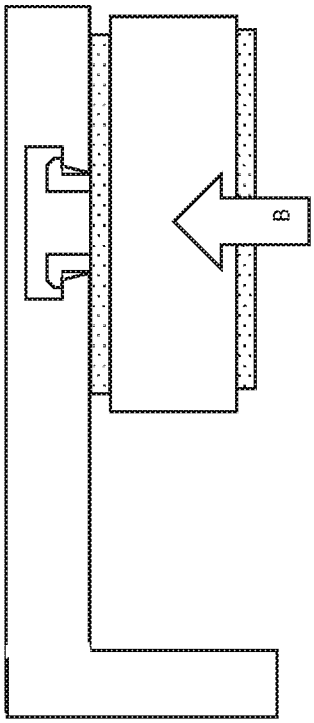

Figure 15d

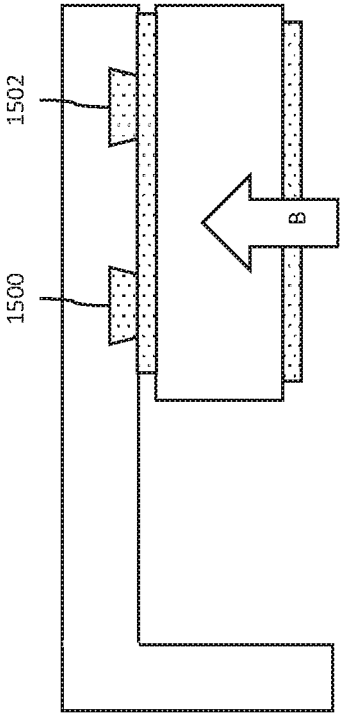

Figure 15a

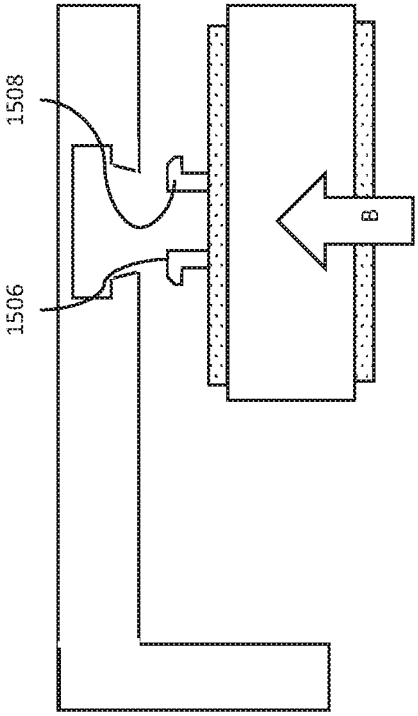

Figure 15c

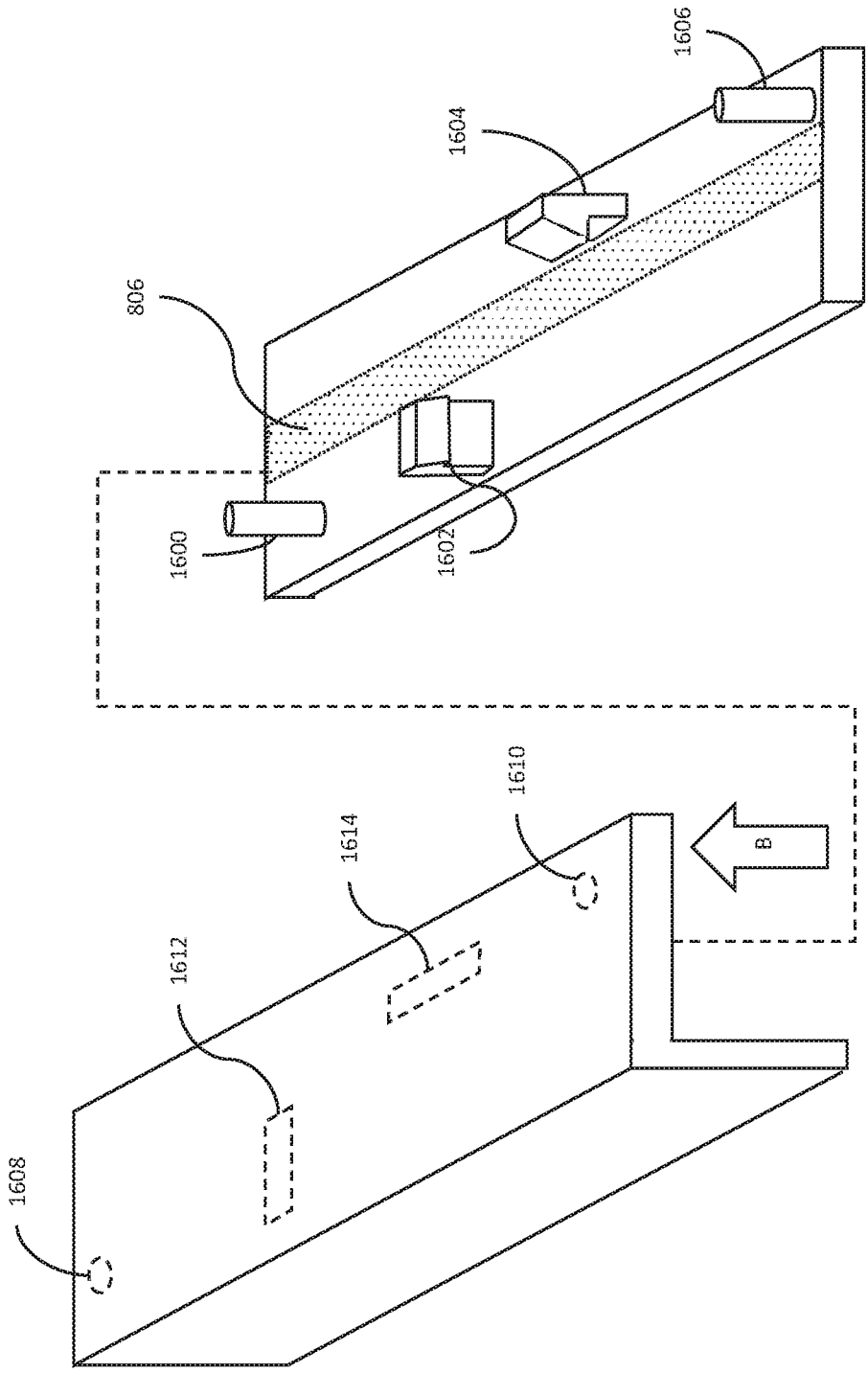

Figure 16

TOUCH SENSING APPARATUS AND METHOD FOR ASSEMBLY

INCORPORATION BY REFERENCE TO ANY PRIORITY APPLICATIONS

Any and all applications for which a foreign or domestic priority claim is identified in the Application Data Sheet as filed with the present application are hereby incorporated by reference under 37 CFR 1.57.

BACKGROUND

Field of the Invention

The present invention relates to touch-sensing apparatus that operate by propagating light by diffusive light scattering above a panel, and in particular to optical and mechanical solutions for defining the light paths and control of curvature of the panel. The present invention relates furthermore to a method of assembling a touch sensing apparatus.

Background of the Invention

In one category of touch-sensitive panels known as 'above surface optical touch systems', a set of optical emitters are arranged around the periphery of a touch surface to emit light that is reflected to travel above the touch surface. A set of light detectors are also arranged around the periphery of the touch surface to receive light from the set of emitters from above the touch surface. An object that touches the touch surface will attenuate the light on one or more propagation paths of the light and cause a change in the light received by one or more of the detectors. The location (coordinates), shape or area of the object may be determined by analysing the received light at the detectors.

In a variant of such 'above surface optical touch system', illustrated in FIG. **1***a* in cross-section, the emitters **301** are arranged on a substrate **304**, and light from the emitters travel above the touch surface **302** of the panel **305** via reflection or scattering on an edge reflector or diffusor **303**. As shown in top-down view FIG. **1***b*, the light will then continue until deflected by a corresponding edge reflector at an opposing edge of the light transmissive panel, where the light will be scattered back down through the transmissive panel and onto the detectors **306**.

Detectors **306** are distributed around the periphery of touch surface **302**, to receive part of the propagating light. The light from each of emitters **301** will thereby propagate inside the transmissive panel **305** to a number of different detectors **306** on a plurality of light paths D. In the illustrated example, the apparatus **300** also includes a controller **320** which is connected to selectively control the activation of the emitters **301** and, possibly, the readout of data from the detectors **306**. Depending on implementation, the emitters **301** and/or detectors **306** may be activated in sequence or concurrently. The signal processor **330** and the controller **320** may be configured as separate units, or they may be incorporated in a single unit. One or both of the signal processor **330** and the controller **320** may be at least partially implemented by software executed by a processing unit **340**.

A problem with such previous systems is the cumbersome alignment between the components thereof, which makes assembly more difficult and costly. Sub-optimal alignment results in signal loss, which moreover is an inherent problem in previous solutions due to the multiple components involved in the light scattering process. Another issue affecting the signal and scattering of the light in the touch sensing apparatus is uncontrolled glass warpage, i.e. distortions of the curvature of the light transmissive panel which will affect the light path and the detection process. While it is critical to accurately control such distortions, previous solutions incorporate complex solutions that may not allow to fully optimize glass warpage control in a mass production line without limiting the throughput of the production.

Some prior art systems rely on coupling and propagation of collimated light across the light transmissive panel. Such systems are however cumbersome to reliably implement due to the small tolerances with respect to the alignment of the components thereof. E.g. the light emitters- and detectors need to be precisely aligned in relation to various lenses and reflect the light via concave and/or convex reflection and/or refraction to get the desired collimation. Such precise alignment may be difficult to achieve in mass production. The use of collimated light, or light reflected by means of specular reflection, also adds to this complexity, which in turn results in a more expensive and less compact system. Furthermore, to reduce system cost, it may be desirable to minimize the number of electro-optical components.

SUMMARY OF THE INVENTION

An objective is to at least partly overcome one or more of the above identified limitations of the prior art.

One objective is to provide a touch-sensitive apparatus based on "above-surface" light propagation which is robust and easy to assemble.

Another objective is to provide an "above-surface"-based touch-sensitive apparatus with efficient use of light.

One or more of these objectives, and other objectives that may appear from the description below, are at least partly achieved by means of touch-sensitive apparatuses according to the independent claims, embodiments thereof being defined by the dependent claims.

According to a first aspect, a touch sensing apparatus is provided comprising a panel that defines a touch surface, a plurality of light emitters and detectors arranged along a perimeter of the panel. The light emitters are arranged to emit a respective beam of emitted light above the touch surface, wherein the light detectors are arranged to receive detection light from the emitted light. The plurality of light emitters and detectors are connected to a substrate extending in a direction parallel with a normal axis of a plane in which the panel extends.

Preferably the plurality of light emitters and detectors are arranged above the touch surface.

Preferably the substrate extends at least partly above the touch surface, whereby the plurality of light emitters and detectors are connected to a portion of the substrate extending above the touch surface.

Preferably the substrate is fixed to a carrier mounted around the perimeter of the panel.

Preferably the carrier is arranged to at least partly enclose edges the panel.

Preferably the carrier comprises fixing elements configured to attach the carrier to a display unit.

Preferably the fixing elements are configured to attach the position of the substrate in relation to the carrier and/or in relation to the display unit.

Preferably the fixing elements are configured to interlock with a mounting element for locking the position of the carrier and/or the substrate to the display unit.

Preferably the fixing elements comprise openings, wherein the carrier forms a cavity having walls at least partly

enclosing the substrate, and wherein at least one of the walls comprises at least one of said openings.

Preferably the fixing elements comprise openings arranged in the carrier and in the substrate, wherein first openings of the carrier are aligned with second openings of the substrate, the first and second openings being configured to receive a mounting element configured to lock the position of the carrier and/or the substrate to the display unit.

Preferably the carrier is configured to be attachable to the display unit at an adjustable position along a direction parallel to the normal axis, whereby a distance between the panel and the display unit along the normal axis is variable upon attaching the carrier to the display unit at at least two different adjustable positions.

Preferably the fixing elements are configured to attach the carrier to the display unit at the adjustable positions along the direction parallel to the normal axis.

Preferably the openings are separated along a direction parallel to the normal axis, and/or wherein the carrier is attachable to a plurality of second openings in a display support of the display unit, the plurality of second openings being separated along the normal axis.

Preferably the carrier is formed from a single monolithic piece of material.

Preferably the substrate extends in a longitudinal direction along the perimeter of the panel, the substrate comprising secondary fixing units configured for variably attaching the position of the substrate on the carrier along the longitudinal direction and/or in the direction of the normal axis.

Preferably vertical alignment units are arranged between adjacent substrates extending in a longitudinal direction along the perimeter of the panel, wherein the vertical alignment units are configured to variably position the adjacent substrates in the direction of the normal axis so that an angle between the adjacent substrates is adjustable.

Preferably a plurality of substrates extend in a longitudinal direction along the perimeter of the panel, wherein a first substrate of said plurality of substrates comprises a connection unit configured to directly interlock with a subsequent connection unit of a subsequent substrate when arranged adjacent said subsequent substrate.

Preferably a sealing window is arranged around the perimeter of the panel, wherein the sealing window comprises a first surface facing the light emitters or the light detectors and an opposite second surface arranged adjacent the touch surface, whereby the emitted or detected light propagates between the first and second surface, and wherein at least one of the first and second surfaces comprises a light collimating surface configured to collimate light propagating above the touch surface.

Preferably the second surface extends in the direction of the normal axis between a base surface of the sealing window, facing the panel, and an opposite top surface of the sealing window, wherein the base surface is offset from the top surface along the direction of the plane with an offset distance so that the second surface forms an angle relative the normal axis, and wherein the second surface comprises a light collimating surface.

According to a second aspect, a touch sensing apparatus is provided comprising a panel extending in a plane having a normal axis, the panel defining a touch surface, a plurality of light emitters and detectors arranged along a perimeter of the panel, wherein the light emitters are arranged to emit a respective beam of emitted light above the touch surface, wherein the light detectors are arranged to receive detection light from the emitted light. The touch sensing apparatus comprises a sealing window arranged around the perimeter, wherein the sealing window comprises a first surface facing the light emitters or the light detectors and an opposite second surface arranged adjacent the touch surface, whereby the emitted or detected light propagates between the first and second surface, wherein the second surface extends in the direction of the normal axis between a base surface of the sealing window, facing the panel, and an opposite top surface of the sealing window, wherein the base surface is offset from the top surface along the direction of the plane with an offset distance so that the second surface forms an angle relative the normal axis, and wherein the second surface comprises a light collimating surface configured to collimate light propagating above the touch surface.

Preferably the first surface and/or second surface form a curved edge convex to the sealing window.

According to a third aspect, a method of assembling a touch sensing apparatus is provided comprising; attaching a substrate having a plurality of light emitters and detectors to a carrier; attaching the carrier around a perimeter of a panel and arranging the substrate to extend in a direction parallel with a normal axis of a plane in which the panel extends.

Preferably the plurality of light emitters and detectors are arranged above the touch surface.

Preferably the carrier if formed from a single monolithic piece of material, the carrier forming a cavity having walls at least partly enclosing the substrate, wherein at least one of the walls comprise openings, the method comprising fixing the carrier to a display unit by fixing mounting elements through said openings.

Preferably the method comprises adjusting a distance between the panel and a display unit along the normal axis by attaching the carrier to the display unit at at least two different adjustable positions along a direction parallel to the normal axis.

Preferably the method comprises adjusting a radius of curvature of the panel in the direction of the normal axis by attaching the carrier to a display unit at at least two different adjustable positions along a direction parallel to the normal axis.

According to a fourth aspect there is provided a touch sensing apparatus, comprising: a panel that defines a touch surface, a plurality of light emitters and detectors arranged along a perimeter of the panel and the light emitters are arranged to emit a respective beam of emitted light above the touch surface, and the light emitters are arranged to receive detection light from the emitted light, a substrate on which the plurality of light emitters and detectors are mountable; and a sealing window sealable against at least one surface of the touch sensing apparatus for sealing a cavity around the plurality of light emitters and detectors wherein the sealing window comprises at least one reference surface for aligning the substrate with respect to the sealing window.

Preferably the sealing window is sealable between the touch surface and a surface of the substrate.

Preferably the surface of substrate is a surface of a carrier for protecting components of the touch sensing apparatus.

Preferably the carrier comprises an upper portion which overlaps a portion of the perimeter of the panel and the sealing window is sealable between the touch surface and the underside of the overlapping upper portion.

Preferably the at least one reference surface is arranged to engage with a reciprocal reference surface on the substrate.

Preferably the at least one reference surface comprises a first portion for aligning in a first direction and a second portion for aligning in a second direction.

Preferably the at least one reference surface aligns the sealing window with respect to the substrate in a plane parallel with the touch surface.

Preferably the at least one reference surface aligns the sealing window with respect to the substrate at a height above the touch surface.

Preferably the sealing window comprises at least one resiliently deformable seal engagable with the substrate.

Preferably the resiliently deformable seal comprises the at least one reference surface.

Preferably the seal is extrudable along one or more surfaces of the sealing window.

Preferably the at least one reference surface substantially extends the entire length of the sealing window.

Preferably the sealing window and/or the substrate comprise a projection having a cross-sectional shape for positive engagement with a reciprocal hole in the substrate and/or sealing window and the at least one reference surface is part of the projection.

Preferably the sealing window and/or the substrate comprise a resiliently deformable projection wherein the projection comprises the at least one reference surface comprises and the projection is deformable on engagement with the substrate and/or sealing window and forms a snap-fit engagement therebetween.

Preferably the sealing window comprises a plurality of reference surfaces.

Preferably the at least one reference surface comprises at least one discrete upstanding projection for engagement with reciprocal hole in the substrate.

Preferably the at least one upstanding projection is one or more of, pegs, hooks, latches, clamps or fasteners.

According to a fifth aspect there is provided a method of manufacture of the touch sensing apparatus comprising: mounting a plurality of light emitters and detectors to a substrate, attaching the substrate around a perimeter of a panel; and mounting a sealing window against at least one surface of the touch sensing apparatus for sealing a cavity around the plurality of light emitters and detectors wherein the sealing window comprises at least one reference surface for aligning the substrate with respect to the sealing window.

Further examples of the invention are defined in the dependent claims, wherein features for the second aspect of the disclosure are as for the first aspect mutatis mutandis.

Some examples of the disclosure provide for a touch sensing apparatus that is easier to manufacture and assemble.

Some examples of the disclosure provide for a touch sensing apparatus with fewer steps of assembly.

Some examples of the disclosure provide for a touch sensing apparatus that is less costly to manufacture.

Some examples of the disclosure provide for a facilitated alignment of emitters and detectors of touch sensing apparatus.

Some examples of the disclosure provide for facilitated control of the curvature of the touch surface of a touch sensing apparatus.

Some examples of the disclosure provide for a more robust touch sensing apparatus.

Some examples of the disclosure provide for a touch sensing apparatus that is more reliable to use.

Some examples of the disclosure provide for a touch sensing apparatus that has a better signal-to-noise ratio of the detected light.

Some examples of the disclosure provide for a more compact touch sensing apparatus.

Still other objectives, features, aspects and advantages of the present disclosure will appear from the following detailed description, from the attached claims as well as from the drawings.

It should be emphasized that the term "comprises/comprising" when used in this specification is taken to specify the presence of stated features, integers, steps or components but does not preclude the presence or addition of one or more other features, integers, steps, components or groups thereof.

BRIEF DESCRIPTION OF THE DRAWINGS

These and other aspects, features and advantages of which examples of the invention are capable of will be apparent and elucidated from the following description of examples of the present invention, reference being made to the accompanying drawings, in which;

FIG. **1***a* is a section view of a touch sensing apparatus according to the prior art;

FIG. **1***b* is a top-down view of a touch sensing apparatus according to the prior art;

FIG. **2** is a schematic illustration, in a cross-sectional side view, of a touch sensing apparatus according to one example;

FIG. **3** is a schematic illustration, in a perspective side view, of a touch sensing apparatus according to one example;

FIG. **4***a* is a schematic illustration, in a side view of FIG. **2**, of a touch sensing apparatus according to one example;

FIG. **4***b* is a schematic illustration of a magnified section of FIG. **4***a*, according to one example;

FIG. **4***c* is a schematic illustration of a magnified section of FIG. **4***a*, according to one example;

FIG. **5***a* is a schematic illustration, in a cross-sectional side view, of a touch sensing apparatus according to one example;

FIG. **5***b* is a schematic illustration of a magnified section of FIG. **5***a*, according to one example;

FIG. **6** is a flow chart of a method of assembling a touch sensing apparatus according to one example;

FIG. **7** is a schematic exploded perspective view of different layers of the touch-sensing apparatus according to one example;

FIG. **8** is a perspective schematic view of through a cross section of the touch sensing apparatus according to one example;

FIG. **9** is a cross sectional view of the touch sensing apparatus according to one example;

FIG. **10** is a cross sectional view of the touch sensing apparatus according to one example;

FIG. **11** is a cross sectional view of the touch sensing apparatus according to one example;

FIG. **12** is a perspective schematic view of through a cross section of the touch sensing apparatus according to one example;

FIG. **13** is a schematic perspective view of the touch sensing apparatus according to one example;

FIG. **14** is a cross sectional view of the touch sensing apparatus according to one example;

FIGS. **15***a* to **15***d* are magnified cross-sectional views of the touch sensing apparatus according to different examples; and

FIG. **16** is a schematic perspective view of the touch sensing apparatus according to one example.

DETAILED DESCRIPTION

In the following, embodiments of the present invention will be presented for a specific example of a touch-sensitive

apparatus **100**. Throughout the description, the same reference numerals are used to identify corresponding elements.

FIG. **1** schematically illustrates a variant of an 'above surface optical touch system', as discussed in the Background Art section above, where the light from the emitters **301** travel above the touch surface **302** of the panel **305** via reflection on an edge reflector **303**. FIG. **1***b* illustrates a top plan view of FIG. **1***a* in an example of a touch-sensitive apparatus **100**.

FIG. **2** schematically illustrate a touch sensing apparatus **100** comprising a light transmissive panel **101** that defines a touch surface **102**. In some embodiments the light transmissive panel **101** is located above a display **130** and permits light generated by the display **130** to propagate therethrough. However in other embodiments the light transmissive panel **101** can comprise light blocking material and does not permit the transmission of light therethrough. For example, the touch sensing apparatus **100**, can be a trackpad or another touch interface which is remote from the display unit **130**. Hereinafter the term "light transmissive panel" **101** will be used to describe either a light transmissive panel **101** or a solid, opaque panel **101**.

A plurality of light emitters **103** and detectors **103'** are arranged along a perimeter **104** of the light transmissive panel **101**. The light emitters **103** are arranged to emit a respective beam of emitted light **105** above the touch surface **102**. I.e. while the touch surface **102** extends along a plane **108**, having a normal axis **107** directed towards a user performing touch operations on the touch surface **102**, the emitted light **105** travels parallel with plane **108** and at a certain distance from the touch surface **102** in the direction of the normal axis **107**, as schematically illustrated with respect to light beam **105**, **105'**, in e.g. FIG. **2**. Light **105**, **105'**, can thus travel across the touch surface **102**, between opposite sides thereof, without being reflected inside the light transmissive panel **101** itself.

In other embodiments, the plurality of light emitters **103** and detectors **103'** are optionally arranged along a perimeter **104** of the light transmissive panel **101** at a different height. In some embodiments, the light emitters **103** and/or detectors **103'** are arranged to emit a respective beam of emitted light **105** below the touch surface **102** and the light beams are guided around the light transmissive panel **101**. The light beams can be guided around the light transmissive panel **101** with additional reflective components (not shown). For the purposes of brevity, the embodiments discussed hereinafter refer to the plurality of light emitters **103** and detectors **103'** being arranged above the touch surface **102**, but the embodiments also include the arrangement where the plurality of light emitters **103** and detectors **103'** are mounted below the touch surface **102**.

The light detectors **103'** are arranged to receive detection light **105'** from the emitted light **105**. FIG. **2** illustrates a section of the touch sensing apparatus **100** adjacent the perimeter **104** of the light transmissive panel **101**. In this section, the emitters and detectors **103**, **103'**, are shown in the same view, as well as the emitted and detected light **105**, **105'**, for clarity of presentation. The plurality of light emitters and detectors **103**, **103'**, are arranged above the touch surface **102** and are connected to a substrate **106** extending in a direction **107'** parallel with a normal axis **107** of a plane **108** in which the light transmissive panel extends. By having the substrate **106** extending in parallel with the normal axis **107**, the plurality of emitters and detectors **103**, **103'** are conveniently arranged, above the touch surface **102** to achieve a compact footprint in the direction of the plane **108** of the touch sensing apparatus **100** around the perimeter **104**, while achieving a direct light path for the emitted or detected light **105**, **105'**, above and across and touch surface **102**. Thus, the emitted light **105** does not have to be reflected in order to diffusively spread above and across the touch surface **102**, and a detector **103'** may directly receive detection light **105'** by being correspondingly positioned above the touch surface **102** at an opposite position anywhere around the perimeter **104**. The amount of available light that can be utilized for the detection and characterization of an object touching the touch surface **102** can thus be maximized, and the signal to noise ratio can be improved. The touch sensing apparatus **100** may comprise a sealing window **126** as illustrated in FIG. **2**, shielding the emitters and detectors **103**, **103'**, from the outside. The emitted and detected light **105**, **105'**, may thus only have to propagate through the sealing window **126** along the light path between the emitters and detectors **103**, **103'**. The sealing window **126** provides sealing around the perimeter **104** of the light transmissive panel **101** and protects the emitters and detectors **103**, **103'** and the display.

Having the substrate extending in the direction **107'** being parallel with the normal axis **107** and the emitters and detectors **103**, **103'**, arranged above the touch surface **102** provides for a less complex alignment to maximize the detection performance of the touch sensing apparatus **100**. The position of the substrate **106** in the direction of the normal axis **107** can be accurately varied to achieve optical alignment with respect to the emitters and detectors **103**, **103'**. The ability to achieve an accurate positioning of the substrate **106**, and consequently the emitters and detectors **103**, **103'**, attached thereto, is also due to the increased accuracy by which the dimensions of the substrate **106** can be defined along the direction of the substrate **106** aligned with the normal axis **107** in FIG. **2**. I.e. the substrate **106** is elongated and extends in a longitudinal direction **123** (FIG. **4***a*) around the perimeter **104** of the light transmissive panel **101**, and it has a short-side extending in parallel with the normal axis **107**. The short-side of the substrate **106**, illustrated in the cross-sectional view of FIG. **2**, may be manufactured to smaller tolerances, and by aligning this side with the normal axis **107**, the tolerances for the alignment of the emitters and detectors **103**, **103'**, along the normal axis **107** can be improved. The alignment can thus be both improved, and facilitated as discussed above. The latter advantage also provides for facilitated and less costly mass production of the touch sensing apparatus **100** and the various touch base display systems in which it may be implemented.

The substrate **106** may extend at least partly above the touch surface **102**, whereby the plurality of light emitters and detectors **103**, **103'**, are connected to a portion **109** of the substrate extending above the touch surface **102**. This further provides for achieving a more robust alignment of the emitters and detectors **103**, **103'**, relative to the light transmissive panel **101**, by being directly joined to the substrate **106**, and thereby simultaneously arranged above the touch surface **102**. It may be conceivable however that the emitters and detectors **103**, **103'**, are connected to the substrate **106** via connection elements (not shown) extending between the substrate **106** and to a position above the touch surface **102**.

The substrate **106** may be fixed to a carrier **110** mounted around the perimeter **104** of the light transmissive panel **101**, as schematically illustrated in FIGS. **1**-**2**. By directly joining the substrate **106** to the carrier **110** provided around the perimeter **104**, the assembly of the touch sensing apparatus **100** may be further facilitated, as the amount of components can be kept at a minimum. For example, the substrate **106** can be accurately fixed in relation to the carrier **110**, due to

the small tolerances possible in the direction of the substrate **106** aligned in parallel with the normal axis **107** in FIG. **1**, as discussed above. The carrier **110** may for example comprise a cavity **116**, as discussed further below, being precisely dimensioned to accommodate the width of the substrate **106** along the direction **107'**, i.e. the short-side of the substrate **106**. Then, accurate positioning of the emitters and detectors **103**, **103'**, in relation to the light transmissive panel **101** is possible as the carrier **110** is mounted around the perimeter **104** thereof. The carrier **110** may extend substantially in the direction **107'** parallel with the normal axis **107**, as with the substrate **107**, to achieve a compact mounting around the perimeter **104**. In some embodiments the carrier **110** may also be the substrate **106** or the emitters and detectors **103**, **103'** are mounted directly to the carrier **110**.

Having the substrate **106** fixed to the carrier **110** allows also for having the carrier **110** wired as an electrical ground reference layer of the substrate **106**.

The carrier **110** may be arranged to at least partly enclose edges **111** of the light transmissive panel **101**, as shown in the example of FIG. **1**. This provides for further increasing the robustness of the touch sensing apparatus **100**, and improving the accuracy of the alignment of the emitters and detectors **103**, **103'**, in relation to the light transmissive panel **101** since the carrier **110**, having the emitters and detectors **103**, **103'**, fixed thereto, may also be directly supporting the light transmissive panel **101** around the perimeter **104**. The carrier **110** may comprise a slot in which the light transmissive panel **101** is fitted around the perimeter **104**.

The carrier **110** may comprise fixing elements **112** configured to attach the carrier **110** to a display unit **113**, **121**. The display unit may comprise a display support **121** and a display panel **113**, which collectively is referred to as a display unit in the present disclosure. Having the carrier **110** attachable to the display unit **113**, **121**, by fixing elements **112**, advantageously provides for further facilitating the assembly of the touch sensing apparatus **100** to a display unit, since the carrier **110** can be directly joined to the latter. Alignment is thus facilitated, due to the minimum amount of components needing such alignment to each other. The robustness of the touch sensing apparatus **100** is further improved, while mass production is made less complex due the minimized number of assembly steps. The fixing elements **112** may comprise any elements configured to provide for fixing of the position of the carrier **110** to the display unit **113**, **121**. In the examples shown in FIGS. **1-2**, the carrier **110** has openings **115**, **115'**, **115"**, discussed further below, which may be aligned with corresponding openings **127** of a support of the display unit **121**, through which mounting elements **114** may be positioned for the fixing. It is conceivable however that the carrier **110** has other types of recesses or protrusions which may interlock with a corresponding mating surface of the display unit **113**, **121**.

The fixing elements **112** may be configured to fix the position of the substrate **106** in relation to the carrier **110**. Thus, besides from fixing the position of the carrier **110** relative to the display unit **113**, **121**, the fixing elements **112** may also fix or at least support the position of the substrate **106** in relation to the carrier **110**. It is conceivable that the substrate **106** may first be arranged in relation to the carrier **110**, and the fixing elements **112** may be arranged to support and strengthen the fixing therebetween, while simultaneously fixing the carrier **110** to the display unit **113**, **121**. This may further provide for increasing the stability and ultimately accuracy of the touch sensing apparatus **100**. From a similar aspect, the fixing elements **112** may be configured to fix the position of the substrate **106** in relation to the display unit **113**, **121**. This may be seen as a consequence from the above, i.e. the fixing elements **112** contributing to the fixing of the substrate **106** to the carrier **110**, which in turn is fixed to the display unit **113**, **121**. It is however conceivable that the fixing elements **112** may fix the substrate **106** directly to the display unit **113**, **121**, in which case the carrier **110** may act as a further support for the substrate **106**.

In one example, as discussed further below, the substrate **106** may comprise second openings **118** which provides for such fixing or support. As mentioned, this may further provide for increasing the stability and ultimately accuracy of the touch sensing apparatus **100**.

The fixing elements **112** may be configured to interlock with a mounting element **114** for locking the position of the carrier **110** and/or the substrate **106** to the display unit **113**, **121**. FIGS. **2-3** show examples of having an elongated mounting element **114** joining the carrier **110** and/or the substrate **106** to the display unit **113**, **121**. The mounting element **112** may however comprise any fastening element configured to exert a force between the carrier **110** and/or the substrate **106** to the display unit **113**, **121**, such as pins, bolts, screws, clips, clamps, locks, bars, rods, anchors, latches, clasps.

The fixing elements **112** may comprise openings **115**, **115'**, **115"**, as illustrated in FIGS. **2-3**. The carrier **110** may form a cavity **116** having walls **117** at least partly enclosing the substrate **106**, illustrated in the example of FIG. **2**. This may provide for increased stability of the fixing of the position of the substrate **106** in relation to the carrier **110**. At least one of the walls **117** may comprise at least one of the openings **115**, **115'**, **115"**, as further illustrated in FIG. **2**. Being able to directly fix the walls **117** of the carrier **110** enclosing the substrate **106** to the display unit **121**, **113**, provides for further simplifying manufacturing, and at the same time further increase the accuracy of the alignment of e.g. the emitters and detectors **103**, **103'**, in relation to the light transmissive panel **101**, since the minimized number of intermediate mounting components improves tolerance control. I.e. build-up of mounting errors in each assembly step is reduced and controlled. It is conceivable that the walls **117** may be fixed to the display unit **113**, **121**, by other fixing elements **112**, such as recesses or protrusions interlocking with correspondingly mating surfaces of the display unit **113**, **121**, and/or fastening elements as exemplified above.

The fixing elements **112** may comprise openings **115**, **115'**, **115"**, **118**, arranged in the carrier **110** and in the substrate **106**. First openings **115**, **115'**, **115"** of the carrier **110** may be aligned with second openings **118** of the substrate **106**, as illustrated in the example of FIG. **2**. The first and second openings **115**, **115'**, **115"**, **118** may be configured to receive a mounting element **114** configured to lock the position of the carrier **110** and/or the substrate **106** to the display unit **113**, **121**. This provides for further facilitated and improved alignment and assembly, and increased robustness. In the example of FIG. **2**, the carrier **110** encloses the substrate **106** such that two opposite openings **115**, **115"**, of the carrier are arranged on either side of the substrate **106**, but it is conceivable that the carrier **110** may be arranged on one side only of the substrate **106**.

The carrier **110** may be configured to be attachable to the display unit **121**, **113**, at an adjustable position **119**, **119'**, along a direction **117"** parallel to the normal axis. A distance **120** between the light transmissive panel **101** and the display unit **113** along the normal axis **107** may thus be variable upon attaching the carrier to the display unit **113**, **121** at at least two different adjustable positions **119**, **119'**. For example, turning to FIG. **3**, the carrier **110** is attached at a

first position **119** to the support of the display unit **121**, via fixing unit **112**. The first position **119** provides for the given distance **120** between the panel of the display unit **113**. The distance **120** may then be decreased by instead attaching the carrier **110** at a second position **119'** which is off-set with respect to the first position **119** in the positive direction of the normal axis **107**, or the direction **107"** as illustrated in FIG. **3**. If the fixing point to the support of the display unit **121** remains constant, e.g. at the opening **127** of a support **121** as illustrated, the carrier **110** will be moved in the opposite direction to the normal axis **107** and the distance **120** will be decreased. Having the carrier **110** being attachable to the display unit **121**, **113**, at an adjustable position **119**, **119'**, along a direction **117"** parallel to the normal axis **107**, thus provides for simple and efficient adjustment of the position of the light transmissive panel **101**.

Besides from overall controlling the distance **120**, as discussed, such adjustment provides for efficiently controlling and varying the curvature of the light transmissive panel **101**. I.e. varying the distance **120** as discussed at a second intermediate location **128'**, between opposite ends of the carrier **110**, along the longitudinal direction **123**, while maintaining the distance **120** at the opposite ends, such as at a first location **128**, will affect the curvature of the carrier **110**, and thereby the curvature of the light transmissive panel **101**. E.g. decreasing the distance **120** at the second location **128'** can produce a more concave shape, i.e. a decreased radius of curvature, of the carrier **110** and the light transmissive panel **101**, in the direction of the normal axis **107**. Increasing the distance **120** between the mentioned opposite ends can instead increase the radius of curvature in the direction of the normal axis **107**. The curvature or warping of the light transmissive panel **101** can thus be controlled efficiently an in a facilitated manner, which is advantageous for increasing throughput in mass-production of displays incorporating the touch sensing apparatus **100** while keeping the warp of the light transmissive panel **101** under control. An optimized curvature of the light transmissive panel **101** increases the reliability and accuracy of the touch sensing apparatus **100**.

The fixing elements **112** may be configured to attach the carrier **110** to the display unit **121** at the adjustable positions **119**, **119'**, along the direction **117"** parallel to the normal axis **107**. Thus, the fixing units **112** be arranged at the different adjustable positions **119**, **119'**, to adjust the distance **120** and the curvature of the a light transmissive panel **101** while providing for securely attaching the carrier to the display unit **113**, **121**. The fixing elements **112** may thus be arranged at least at the first and second locations **128**, **128'**, along the longitudinal direction **123** as discussed above, where each of the locations in the longitudinal direction **123** may have at least two adjustable positions **119**, **119'**, as illustrated in the example of FIG. **3**.

The openings **115**, **115'**, of the carrier **110** may be separated along a direction **117"** parallel to the normal axis **107**, as illustrated in FIG. **3**. Alternatively, or in addition, the carrier **110** may be attachable to a plurality of second openings **122** in a display support **121** of the display unit, where the plurality of second openings **122** are separated along the normal axis **107**. Thus, the position **119**, **119'**, may be remained fixed while the carrier **110** is attached to the support **121** at the various second openings **122**, to adjust the curvature of the light transmissive panel **101** and/or the distance **120** as discussed above. Although the examples in FIGS. **2-3**, show openings **115**, **115'**, **115"**, **127**, it is conceivable that the attachment between the carrier **110** and the display unit **121**, **113**, is provided by other fixing elements **112** as exemplified above.

The carrier **110** may be formed from a single monolithic piece of material. The structural integrity and the stability of the carrier **110** can thereby be increased, which further optimizes the parameters discussed above with respect to alignment, robustness, ease of assembly etc. One example of a possible process by which the carrier can be formed as a single piece of material is an extrusion process, but it is conceivable that the carrier **110** may be formed from other hot or cold metal or polymer working processes such as drawing, rolling, or molding processes.

The substrate **106** may extend in a longitudinal direction **123** along the perimeter **104** of the light transmissive panel **101**. FIG. **4***a* illustrates a view of a plurality of substrates **106**, **106'**, extending along the longitudinal direction **123**. The light transmissive panel **101** and the carrier **110** holding the substrates have been excluded in the view for clarity of presentation. The substrates **106**, **106'**, may comprise secondary fixing units **124**, **124'**, configured for variably attaching the position of each of the substrates **106**, **106'**, on the carrier **110** along the longitudinal direction **123** and/or in the direction of the normal axis **107**. This provides for more accurately adjusting the position of the substrates **106**, **106'**, in relation to the light transmissive panel **101**. While each of the substrates **106**, **106'**, may be within tolerances, the accumulated error obtained when several substrates **106**, **106'** are connected along the longitudinal direction **123** may exceed the total tolerance of the full length of the light transmissive panel **101**. Such accumulation of errors may be effectively prevented by having secondary fixing units **124**, **124'**, as elucidated above. The secondary fixing units **124**, **124'**, may be provided on various locations on the substrates **106**, **106'**, to allow for adjusting the position, such as on opposite ends thereof.

The touch sensing apparatus **100** may comprise vertical alignment units **135** arranged between adjacent substrates **106**, **106'**, extending in a longitudinal direction **123** along the perimeter **104** of the light transmissive panel **101**. The vertical alignment units **135** are configured to variably position the adjacent substrates **106**, **106'**, in the direction of the normal axis **107** so that an angle **136** between the adjacent substrates **106**, **106'**, can be adjusted. FIG. **4***b* schematically illustrates a vertical alignment unit **135** positioned between adjacent substrates **106**, **106'**, to vary the position thereof in the direction of the normal axis **107**, i.e. along arrows **137**, so that the angle **136** may be set to a desired value. The vertical alignment unit **135** thus provides for facilitating the alignment of the plurality of substrates **106**, **106'**, to e.g. the curvature of the light transmissive panel **101**. For example, if the light transmissive panel **101** is concave in the direction of the normal axis **107**, initially parallel substrates **106**, **106'**, may be angled to closely follow the concave shape of the light transmissive panel **101** by increasing the angle **136** between the substrates **106**, **106'**, as schematically illustrated in FIG. **4***b*. The position of the emitters and detectors **103**, **103'**, on the substrates **106**, **106'**, may thus remain at an optimized vertical position relative the light transmissive panel **101** for various curvatures thereof. The vertical alignment unit **135** may comprise various units configured to change the position of the adjacent substrates **106**, **106'**, in the direction of the normal axis **107**, such as bolts, screws, pins, or any other elements that can provide an offset at the ends of the substrates **106**, **106'**.

The touch sensing apparatus **100** may comprise force distributing units **138** positioned between adjacent substrates **106**, **106'**, configured to provide a fixing force therebetween, as schematically illustrated in FIG. **4***c*. The force distributing units **138** may provide for improving and facilitating the fixing of the substrates **106**, **106'**, to the carrier, without the need for dedicated fixing elements such as screws, bolts, etc to each end of respective substrates **106**, **106'**, thereby reducing the amount of such fixing elements, which facilitates the assembly of the touch sensing apparatus **100**.

The touch sensing apparatus may thus comprise a plurality of substrates **106**, **106'**, extending in a longitudinal direction **123** along the perimeter **104** of the light transmissive panel **101**. A first substrate **106** of the plurality of substrates may comprises a connection unit **125** configured to directly interlock with a subsequent connection unit **125'** of a subsequent substrate **106'** when arranged adjacent said subsequent substrate, as schematically illustrated in FIG. **4***a*. It is thereby possible to directly connect subsequent substrates **106**, **106'**, and eliminate the need for intermediate connectors, which further provides for facilitating the assembly of the touch sensing apparatus **100**.

The touch sensing apparatus **100** may comprise a sealing window **126** as schematically illustrated in FIGS. **5***a-b*. The sealing window **126** may be arranged around the perimeter **104** of the light transmissive panel **101**. The sealing window **126** may comprise a first surface **129** facing the light emitters **103** or the light detectors **103'**, and an opposite second surface **130** arranged adjacent the touch surface **102**. Emitted or detected light thus propagates between the first and second surface **129**, **130**. At least one of the first and second surfaces **129**, **130**, may comprises a light collimating surface **129**, **130**, configured to collimate light propagating above the touch surface **102**. I.e. emitted light **105** will be collimated by the sealing window **126**, so that the light propagating above the touch surface **102** will be collimated. Detectors **103'** will receive the collimated light which will be focused through a corresponding sealing window **126**. As the emitters and detectors **103**, **103'**, are arranged above the touch surface **102** and are connected to a substrate **106** extending in a direction parallel with a normal axis **107**, it is possible to provide for a very precise and improved alignment thereof in relation to the sealing window **126**, which allows for achieving collimated light in a highly optimized manner, and an associated increase in signal strength since more of the emitted light can be collected by the detectors **103'**. The emitted light is collimated in a direction parallel with the plane **108** in which the light transmissive panel **101** extends. Collimating the light with sealing window **126** also allows for reducing the aperture of the sealing window **126**, i.e. the thickness of the sealing window **126** in the direction of the normal axis **107**, while still detecting a sufficient amount of light. This provides for reducing the amount of ambient light reaching the detectors **103'**, thus improving the signal to noise ratio.

Turning to FIG. **5***b*, the second surface **130** may extend in the direction of the normal axis **107** between a base surface **131** of the sealing window **126**, facing the light transmissive panel **101**, and an opposite top surface **132** of the sealing window **126**. The base surface **131** may be offset from the top surface **132** along the direction of the plane **108** with an offset distance **133** so that the second surface **130** forms an angle **134** relative the normal axis **107**. As further illustrated in FIG. **5***b*, the second surface may comprises the light collimating surface **130**. Thus, in addition to having a convex shape as illustrated in FIG. **5***b*, the second surface **130** is arranged to assume a tilted configuration as provided by the offset distance **133**. Having such angled configuration provides for reducing the impact of Fresnel reflexes. The Fresnel reflexes otherwise generate additional unwanted light paths that will reduce the apparent attenuation on some detection lines, especially when they run parallel to and near a sealing window **126**. These Fresnel reflexes may also result in artifacts and false touch information. By having an angled and/or curved second surface **130** of the sealing window **126**, the light may instead bounce off the second surface **130** with such an angle so that it leaves the plane **108**, and thereby not interfere with the detection of the remaining light.

A sealing window **126** as described above can provide for the advantageous effects as described for touch sensing apparatuses having a plurality of light emitters and detectors arranged in a multitude of configurations, not limited to the configurations described in relation to FIGS. **2** and **3** exemplified above. A touch sensing apparatus **100** is thus provided comprising a light transmissive panel **101** extending in a plane **108** having a normal axis **107**, wherein the light transmissive panel defines a touch surface **102**. The touch sensing apparatus **100** comprises a plurality of light emitters **103** and detectors **103'** arranged along a perimeter **104** of the light transmissive panel, wherein the light emitters are arranged to emit a respective beam of emitted light **105** above the touch surface, wherein the light detectors are arranged to receive detection light **105'** from the emitted light. The touch sensing apparatus **100** comprises a sealing window **126** arranged around the perimeter, wherein the sealing window comprises a first surface **129** facing the light emitters or the light detectors and an opposite second surface **130** arranged adjacent the touch surface, whereby the emitted or detected light propagates between the first and second surface, wherein the second surface extends in the direction of the normal axis between a base surface **131** of the sealing window, facing the light transmissive panel, and an opposite top surface **132** of the sealing window, wherein the base surface is offset from the top surface along the direction of the plane with an offset distance **133** so that the second surface forms an angle **134** relative the normal axis, and wherein the second surface comprises a light collimating surface **130** configured to collimate light propagating above the touch surface.

The first surface **129**, facing the emitters or detectors **103**, **103'**, may also be angled, with an angle **134'**, as schematically illustrated in FIG. **5***a*, to provide for the desired light path from or towards the emitters or detectors **103**, **103'**, respectively. The first surface **129** may also comprise a light collimating surface and have a convex shape towards the emitters or detectors **103**, **103'**, as illustrated in FIG. **5***a*, in addition to being arranged at an angle **134'**. The angles **134**, **134'**, may be in the range of 2-10 degrees relative to the normal axis **107** to provide for a particularly advantageous reduction of Fresnel reflexes. An angle greater than 2 degrees avoids Fresnel reflexes and an angle of less that 10 degrees reduces the light field height.

The sealing window **126** may comprise a fixing element **139** configured to interlock to carrier **110**. In the example in FIG. **5***a*, the fixing element comprises a protrusion **139** arranged to interlock with a corresponding recess in the carrier **110**. Mounting and fixing of the sealing window **126** may thus be facilitated and improved since the fixing element **139** may snap into the carrier **110**, without needing to have separate fixing units or adhesives joining the sealing window **126** to the carrier **110**. In some circumstances, it is preferable not to use an adhesive because the adhesive may

not be resilient in high temperatures. Use of an adhesive for fixing the sealing window **126** can be problematic because the uncured adhesive allows for relative movement between the components and precise alignment may be difficult. It is conceivable that the fixing element **139** may comprise any other shape, such as a recess, for interlocking with a corresponding mating surface of the carrier **110**.

Alternative embodiments of the sealing window **126** will now be described in reference to FIGS. **7** to **16**.

FIG. **7** shows an exploded perspective schematic view of the touch sensing apparatus **100**. The dotted line shows the normal axis **107** of the touch surface **102** at the center of the light transmissive panel **101**. For the purposes of clarity, the exploded perspective view in FIG. **7** shows the separate components side by side, but the dotted line of the normal axis **107** represents the order of how the components stack together. As mentioned previously the carrier **110** may extend substantially in the direction parallel with the normal axis **107**. In this way the carrier **110** comprises a downwardly projecting skirt **700** from the upper surface **702**.

The sealing window **126** is mountable on the carrier **110** and this will be discussed in further detail below. The sealing window **126** comprises a similar shape to the arrangement of the plurality of light emitters **103** and detectors **103'** (not shown in FIG. **7** for the purposes of clarity). The sealing window **126** is mounted such that the plurality of light emitters **103** and detectors **103'** are between the sealing window **126** and the skirt **700**. As shown in FIG. **7**, the sealing window **126** is a rectangular loop structure.

In some embodiments, the sealing window **126** may be formed from a single monolithic piece of material, thus providing for a robust sealing window **126** and a stable attachment to the carrier **110** and the light transmissive panel **101**. The sealing window **126** may be formed by an extrusion process. In one embodiment, the sealing window is formed from two separate materials. A first material, such as a dyed PMMA or similar NIR transparent material, is used for a transparent section and a second material, such as a compressible light blocking material, is used for sealing off the E/D compartment. This may be achieved by e.g. using a co-extrusion process.

In other embodiments, the sealing window **126** is formed from a plurality of longitudinal pieces (not shown) and joined together to form a rectangular arrangement. Each longitudinal piece may be a single monolithic piece of material. Considering the sealing window **126** in FIG. **7**, the arrangement as shown in FIG. **7** is formed from four pieces of extruded sealing window material **126**. The four pieces are then joined together to construct the rectangular loop as shown in FIG. **7**. The four pieces of the extruded sealing window **126** can be adhered together with glue, or fastened together with screws, clips, clamps or any other suitable fastener. The glue can be applied and cured before the sealing window **126** is slid into the carrier **110** or the glue can be left to cure once the sealing window **126** is positioned in the carrier **110**. Alternatively the four pieces are not fastened or glued together and are held in position with a friction fit.

The sealing window **126**, once assembled, is sandwiched between the upper surface **702** of the carrier **110** and the light transmissive panel **101**. In some embodiments, the sealing window **126** is slid into position between the carrier **110** and the light transmissive panel **101**. FIG. **8** shows the direction A in which the sealing window **126** is moved with respect to the carrier **110** and the light transmissive panel **101**. In this embodiment the sealing window **126** is slid in a direction parallel with the plane of the light transmissive panel **101**. In other embodiments, discussed in more detail below, the sealing window **126** can be inserted into the carrier **110** in a different direction such as parallel to the normal axis **107** and perpendicular to the touch surface **102**.

In some embodiments the light transmissive panel **101** is not required to be light transmissive. For example the touch surface **102** can be on a medium through which light does not propagate. In some embodiments the touch surface **102** can be part of a surface which does not require light from a display unit **113**, **121** to be visible there through. That is, the touch sensing apparatus **100** is remote from the display unit **113**, **121** and the display unit **113**, **121** is not stacked together with the other components as shown in FIG. **7**. In this way the light transmissive panel **101** can be considered to be a panel **101**. For the purposes of clarity, the panel **101** has been referred to as a light transmissive panel **101**, but all the embodiments are also applicable to a panel comprising an opaque or light blocking material.

Turning to FIG. **8**, the construction of the carrier **110**, the sealing window **126** and the light transmissive panel will now be discussed in more detail. FIG. **8** shows a partial perspective cross-sectional view of the touch sensing apparatus **100**. In particular FIG. **8** is magnified to show the arrangement between the carrier **110**, the sealing window **126** and the light transmissive panel **101**.

The sealing window **126** comprises a dual purpose. Firstly, the sealing window **126** provides sealing around the perimeter **104** of the light transmissive panel **101** and protects the emitters and detectors **103**, **103'** and the edge of the light transmissive panel **101**. This means that the sealing window **126** prevents ingress of dirt, water and other contaminants into the interior of the touch sensing apparatus **100**. This helps protect the internal components such as the plurality of emitters and detectors **103**, **103'**. Secondly, the sealing window **126** allows light from the emitters and detectors **103**, **103'** to propagate therethrough. In some embodiments, as discussed in reference to FIG. **5***a*, the sealing window can optionally comprise optical elements for refracting, deflecting, diverting or focusing the light beams therethrough. However in other embodiments, the sealing window is optically passive and does not comprise any optical elements for refracting, deflecting, diverting or focusing the light beams therethrough.

As can be seen from FIG. **8**, an upper sealing surface **800** of the sealing window **126** engages with an interior underside surface **802** of the carrier **110**. The upper surface **702** of the carrier **110** is arranged to project over the light transmissive panel **101**. In this way the carrier **110** overlaps a portion of the light transmissive panel **101** around the perimeter of the light transmissive panel **101**. The portion **810** of the upper surface **702** that overlaps with the light transmissive panel **101** is indicated by a bracket in FIG. **8**. The overlapping portion **810** of the carrier **110** provides protection for the perimeter light transmissive panel **101** from shock and other physical forces. The overlapping portion **810** also provides an overhang on which the sealing window **126** can be mounted. The interior underside surface **802** of the carrier is an opposite face to the upper surface **702**. A lower sealing surface **804** of the sealing window **126** engages with the touch surface **102**.

In order to aid the sealing, the sealing window **126** optionally comprises one or more deformable seals or integral gaskets **806**, **808** mounted on the upper sealing surface **800** and the lower sealing surface **804** respectively. The deformable seals **806**, **808** are arranged to deform when the light transmissive panel **101** is urged towards the carrier **110**. The deformable seals **806**, **808** are extruded along the

longitudinal length of the sealing window **126**. In some embodiments the deformable seals **806**, **808** are integral with the sealing window **126**. As mentioned previously, in some embodiments the deformable seals **806**, **808** can be manufactured at the same time as the sealing window **126** in a co-extrusion process. Alternatively the deformable seals **806**, **808** are mounted and adhered to the sealing window **126** after the sealing window **126** has been extruded. In some embodiments the deformable seals **806**, **808** are made from a thermoplastic elastomer (TPE). The deformable seals **806**, **808** can be colored black to block transmission of light from the sealing window **126**. The deformable seals **806**, **808** can be any suitable color or material for absorbing light and minimizing light in-coupling.

In some embodiments the sealing window **126** is configured to be mounted between two surfaces for sealing and protecting the emitters and detectors **103**, **103'** from the outside environment. In some embodiments the sealing window **126** is arranged to seal against the touch surface **102** and the interior underside surface **802** of the carrier **110**. In other embodiments the sealing window **126** can be mounted between any other surface to provide a sealed cavity **116** around the emitters and detectors **103**, **103'**. In some embodiments the sealing window **126** seals between the interior underside surface **802** and other surface. The other surface does not need to be the touch surface **102**. Instead the other surface is another interior surface of the carrier **110** such as a surface on which the substrate **106** is mounted on. In some other embodiments the sealing window **126** is mounted and sealed against another components and neither of the touch surface **102** and the interior underside surface **802**. In some embodiments the sealing window **126** is sealable against at least one surface of the touch sensing apparatus **100** for sealing a cavity **116** around the plurality of light emitters and detectors **103**, **103'**. In some embodiments the carrier **110** may also be the substrate **106** or the emitters and detectors **103**, **103'** are mounted directly to the carrier **110**.

In some embodiments the sealing window **126** comprises at least one reference surface **812** for aligning the sealing window **126** with respect to the carrier **110**. The reference surface **812** will be discussed in further detail with respect to FIG. **9** for the purposes of clarity.

FIG. **9** is a schematic cross-sectional view of the touch sensing apparatus **100**. The sealing window **126** is inserted between the light transmissive panel **101** and the carrier **110**. The upper deformable seal **806** comprises a reference surface **812** for aligning the sealing window **126** with respect to the carrier **110**. The upper deformable seal **806** comprises a projection **814** which projects upwardly from the upper deformable seal **806** and the sealing window **126**. In this way, the reference surface **812** is upright with respect to the sealing window **126**. The projection **814** also optionally comprises a chamfer **816** in addition to the reference surface **812**.

The chamfer **816** means that the deformable upper seal **806** does not snag on the carrier **110** when the sealing window **126** is inserted between the carrier **110** and the light transmissive panel **101**. Accordingly as the sealing window **126** is pushed into place, the chamfer **816** urges against the interior underside surface **802** of the carrier **110**. Initially, the deformable upper seal **806** is squashed between the carrier **110** and the light transmissive panel **101** when the sealing window **126** is being forced between the carrier **110** and the light transmissive panel **101**.

The sealing window **126** is pushed towards a notch **820** located in the interior underside surface **802** of the carrier **110**. In some embodiments, the notch **820** is a groove that extends around the periphery of the carrier **110**. The notch **820** comprises a reciprocal reference surface **818** for aligning with the reference surface **812** of the projection **814**. In particular, the notch **820** is a reference point for indicating that the sealing window **126** is inserted underneath the overlapping portion **810** sufficiently to form a seal and protect the internal components of the touch sensing apparatus **100**. The notch **820** is positioned a predetermined distance from the edge **822** of the carrier **110**. In some embodiments the predetermined distance is at least half the width of the sealing window **126**.

When the sealing window **126** pushed sufficiently between the carrier **110** and the light transmissive panel **101**, the deformed projection **814** is located within the notch **820**. At this point when the sealing window **126** is located in the correct position with respect to the carrier **110**, the reference surface **812** abuts against a reciprocal reference surface **818** in the notch **820** in the carrier **110**.

The compressed projection **814** resiles and expands once located in the notch **820**. In this way, the project **814** snaps into position and positively engages with the notch **820**. When the sealing window **126** is located and the projection **814** snaps into place, the sealing window **126** makes an audible "click". Additionally or alternatively the snapping of the projection **814** into position provides a tactile feedback during assembly that the sealing window **126** is seated correctly.

The size of the notch **820** is slightly larger than the dimensions of the projection **814**. Accordingly the projection **814** fits snugly within the notch **820**. This means that the frictional forces between the carrier **110**, the light transmissive panel **101** and the sealing window **126** are sufficient to hold the sealing window **126** in place. Adhesive is not required to fix the sealing window **126** in place. However in some embodiments adhesive is optionally used in addition to the snap-fit positive engagement.

In some embodiments the reference surface **812** abuts against the reciprocal reference surface **818**. This means that the sealing window **126** opposes the direction A by virtue of the engaged reference surfaces **812**, **818**. Removal of the sealing window **126** may only be achieved with a special tool which compresses the projection **814**.

Once the sealing window **126** has been seated correctly in the carrier **110**, the reference surfaces **812**, **818** maintain the alignment between the carrier **110** and the sealing window **126**. The deformable seals **806**, **808** maintain the relative position of the sealing window **126** with respect to the carrier and prevents lateral movement in a plane parallel to the light transmissive panel **101**. Furthermore, the reference surfaces **812**, **818** ensure that the sealing window **126** is maintained at a certain height above the touch surface **102**.

The shape and size of the deformable seal **806**, **808** can be varied. Another embodiment with such a variation is shown in FIG. **10**. FIG. **10** shows a cross sectional side view of the touch sensing apparatus **100**. The arrangement is the same as shown in reference to FIGS. **8** and **9**, except the cross sectional shape of the deformable seal **806**, **808** is different. In this embodiment the projection **1002** comprises a curved upwardly projecting bulge **1002** on the upper deformable seal **806**. The bulge **1002** comprises a curved reference surface **1004** which engages with one or more reciprocal reference surfaces **818** of the notch **820**. The curved reference surface **1004** functions in a similar way to the chamfer **814** as described in reference to the previous embodiment when inserting the sealing window **126** between the light transmissive panel **101** and the carrier **110**. The bulge **1002**

has dimensions which are substantially the same width as the width of the notch **820** so that the sealing window **126** does not experience lateral movement in a direction parallel with the plane of the light transmissive panel **101**. The lower seal **808** optionally comprises a similar bulge **1006** for engaging and sealing against the touch surface **102**. By making the upper seal **806** and the lower seal **808** have the same cross section, manufacture can be simplified because the same die (not shown) can be used during extrusion of the deformable seals **806**, **808**.

Advantageously the shape of the projection **1002** means that the sealing window **126** can be removed with a similar magnitude of force to the force needed for insertion during assembly. Accordingly removal of the sealing window **126** may not require a tool. This can make maintenance which requires removal of the sealing window **126** easier.

Another embodiment is shown in FIG. **11**. FIG. **11** shows a cross sectional side view of the touch sensing apparatus **100**. FIG. **11** is the same as shown in FIG. **10** except that there is an additional projection and notch. The first notch **1100** and first bulge **1104** are substantially the same as the notch **820** and the bulge **1002** as discussed in reference to FIG. **10**. In addition, there is a second notch **1102** and a second bulge **1106**. Likewise the lower seal **808** comprises similar first and second bulges **1108**, **1110**. Having two projecting bulges **1104**, **1106** means that there are two points of sealing engagement between the sealing window **126** and the light transmissive panel **101** and the carrier **110** respectively. This means that there will be less rotation of the sealing window **126** about the deformable seal **806**, **808**. Accordingly, the tolerances needed to accommodate rotational movement of the sealing window about the longitudinal axis of the sealing window can be lower. There is also an increased surface area of the deformable seals **806**, **808** and therefore the deformable seals will cool quicker during manufacture.

In another embodiment, the first and second bulges **1104**, **1106** engage with a single notch **820** as shown in FIG. **10**. The dotted line between the first and second notches **1100**, **1102** represents a single notch, similar to the notch **820** in FIG. **10**. In this case the first bulge **1104** engages a first reciprocal reference surface **1114** and the second bulge **116** engages with a second reciprocal reference surface **1112**. The first and second reciprocal reference surfaces **1114**, **1112** are walls of the notch **820**.

Another embodiment will now be discussed in reference to FIG. **12**. FIG. **12** shows a schematic perspective and cross-sectional view of the touch sensing apparatus **100**. The arrangement as shown in FIG. **12** is the same as shown in FIGS. **8** and **9** except that the deformable seal **806** comprises a plurality of discrete projections **1200**, **1202**, **1204**. Each of the projections is deformable and is inserted between the light transmissive panel **101** and the carrier **110** in the same way as described with respect to the previous embodiments. The carrier **110** comprises a serious of reciprocal recesses (not shown for clarity) to receive a respective projection **1200**, **1202**, **1204**. In this way less deformable material is required to perform the alignment function. The projections may be adhered to the deformable seal material **806** or the projections can be extruded. Each of the projections **1200**, **1202**, **1204** comprise a reference surface for aligning the projection and the sealing window **126** with the reciprocal recess in the carrier **110**. In some embodiments the projections **1200**, **1202**, **1204** can comprise any suitable cross sectional shape. For example, the projections can comprise an oval curved cross section, similar to the bulges shown in the embodiments discussed in reference to FIGS. **10** and **11**.

FIG. **13** shows yet another embodiment. FIG. **13** shows a schematic exploded perspective view of the touch sensing apparatus **100**. For the purposes of clarity the light transmissive panel **101** is not shown. The sealing window **126** is the same as described in reference to the previous embodiments. The upper deformable seal **806** is mounted on the upper sealing surface **800**. In contrast to the previous embodiments, the deformable seal **806** does not comprise upward projections comprising a reference surface. Instead the sealing window **126** comprises positioning pegs **1300**, **1302** for engagement in the reciprocal positioning holes **1304**, **1306** located in the carrier **110**. In this way the reference surfaces are separate from the deformable seal **806**. Each of the positioning pegs **1300**, **1302** comprises a reference surface **1308**, **1310** for aligning the sealing window **126**. In this way as the sealing window is slid underneath the carrier **110** in the direction A, the pegs **1300**, **1302** slot into the positioning holes **1304**, **1306**. The holes **1304**, **1306** are blind holes and when the reference surfaces **1308**, **1310** abut the end of the blind holes **1304**, **1306**, the sealing window **126** is in the correct position. The holes **1304**, **1306** are deep enough such that the sealing window **126** is completely under the carrier **110**, similar to the arrangement shown in the previous embodiments.

FIG. **14** shows another embodiment. FIG. **14** shows a cross sectional side view of the touch sensing apparatus **100**. The arrangement as shown in FIG. **14** is the same as shown in FIGS. **8** and **9** except that the projection **1400** is formed on the carrier **110** and the notch **1402** is formed in the upper deformable seal **806**. In this embodiment the projection **1400** is rigid and downwardly projects from the carrier **110**. The notch **1402** is deformable and snaps into position when the notch **1402** is in positive engagement with the projection **1400** and reference surfaces are in engagement. The sealing window **126** is inserted between the carrier and the light transmissive panel **101** in the same way as discussed previously.

In alternative embodiments, the carrier **110**, the light transmissive panel **101** and the sealing window **126** are assembled in a different order. The components are the same as described in reference to the previous embodiments. Turning to FIGS. **15***a*-**15***d* and FIG. **16** the alternative method of assembly will now be discussed.

FIGS. **15***a*-**15***d* show a side cross section of the touch sensing apparatus **100**. The light transmissive panel **101** has been omitted for clarity. The sealing window **126** is pushed towards the carrier **110** in direction B. That is, a direction which is parallel to normal axis **107**. FIG. **15***a* shows two deformable projections **1500**, **1502** which have a snap-fit engagement with reciprocal grooves in the carrier. The deformable projections **1500**, **1502** have a cross sectional shape that snaps into the reciprocal holes when the sealing window is seated correctly in the carrier **110**.

FIG. **15***b* shows a similar arrangement to FIG. **15***a* except that there is a single projection **1504** which does not have a snap-fit engagement. Optionally, positive engagement is provided by the projection **1504** having a snug friction fit. When the sealing window **126** cannot move any further with respect to the carrier **110**, the projection **1504** will abut the reciprocal surface of the hole in the carrier **110** and the sealing window will be seated correctly.

FIGS. **15***c* and **15***d* show stepwise engagement of the same arrangement. The deformable seal **806** comprises snap-fit latches **1506**, **1508** which bend and snap into place once the sealing window is fully seated in the carrier **110**.

Once the sealing window **126** and the carrier **110** are assembled, then the light transmissive panel **101** is mounted in the carrier **110**.

FIG. **16** shows a schematic exploded perspective view of the carrier **110** and the sealing window **126**. The arrangement as shown in FIG. **16** is the same as shown in FIG. **13**, except that the relative movement of the sealing window **126** with the respect to the carrier **110** during assembly is perpendicular. That is, along direction B parallel with the normal axis **107**. Similar to the embodiment as shown in FIG. **13**, the sealing window **126** comprises a plurality of reference surfaces which are not part of the deformable seal **806**. Each of pegs **1600**, **1606** and snap-fit latches **1602**, **1604** comprises a reference surface for alignment. FIG. **16** shows pegs **1600**, **1606** for engagement with holes **1608**, **1610**. FIG. **16** also shows resiliently deformable latches **1604**, **1602** for snap-fit engagement with holes **1612** and **1614**.

A further mounting unit **140** may be provided between the sealing window **126** and the light transmissive panel **101**, as schematically illustrated in FIG. **5***a*. The mounting unit **140** may comprise a resilient material that allows the sealing window **126** to assume a secure fixed position relative the light transmissive panel **101**. The sealing window **126** may have a corresponding groove into which the mounting unit **140** may be securely positioned.

A method **200** of assembling a touch sensing apparatus **100** is provided. FIG. **6** illustrates steps of the method **200**. The order in which the steps of the method **200** are described and illustrated should not be construed as limiting and it is conceivable that the steps can be performed in varying order. The method **200** comprises fixing **201** a substrate **106** having a plurality of light emitters **103** and detectors **103'** to a carrier **110**, and attaching **202** the carrier **110** around a perimeter **104** of a light transmissive panel **101**. The method further comprises arranging **203** the substrate to extend in a direction **107'** parallel with a normal axis **107** of a plane **108** in which the light transmissive panel **101** extends, whereby the plurality of light emitters and detectors **103**, **103'**, are arranged above the touch surface **102**. The method **200** thus provides for a facilitated assembly of the touch sensing apparatus **100** while achieving optimal alignment, robustness, and accuracy as described above in relation to FIGS. **2-3**.

As mentioned, the carrier **110** may be formed from a single monolithic piece of material, and the carrier may form a cavity **116** having walls **117** at least partly enclosing the substrate **106**. At least one of the walls **117** may comprise openings **115**, **115'**, **115"**. The method **200** may comprise fixing **204** the carrier **106** to a display unit **121**, **113**, by fixing mounting elements **114** through the openings **115**, **115'**, **115"**, thereby providing for the above mentioned advantages.

The method **200** may comprise adjusting **205** a distance **120** between the light transmissive panel **101** and a display unit **113**, **121**, along the normal axis **107** by attaching **207** the carrier **110** to the display unit **113**, **121**, at at least two different adjustable positions **119**, **119'**, along a direction **117"** parallel to the normal axis **107**. Control of the distance **120** is improved and facilitated, and may thereby be more easily optimized to various applications of the touch sensing apparatus **100**.

The method **200** may comprise adjusting **208** a radius of curvature of the light transmissive panel **101** in the direction of the normal axis **107** by attaching **209** the carrier **110** to a display unit **113**, **121**, at at least two different adjustable positions **119**, **119'**, along a direction **117"** parallel to the normal axis **107**. Control of the curvature of the light transmissive panel **101** is thus improved as described above.

The invention has mainly been described above with reference to a few embodiments. However, as is readily appreciated by a person skilled in the art, other embodiments than the ones disclosed above are equally possible within the scope and spirit of the invention, which is defined and limited only by the appended patent claims.

For example, the specific arrangement of emitters and detectors as illustrated and discussed in the foregoing is merely given as an example. The inventive coupling structure is useful in any touch-sensing system that operates by transmitting light, generated by a number of emitters, inside a light transmissive panel and detecting, at a number of detectors, a change in the received light caused by an interaction with the transmitted light at the point of touch.

What is claimed is:

1. A touch sensing apparatus comprising:

a panel comprising a top surface that includes a touch surface, a back surface, and an edge surface;

a plurality of light emitters arranged along a periphery of the panel;

a substrate configured to support at least one of the plurality of light emitters such that the at least one of the plurality of light emitters transmits a portion of light in a plane extending over the touch surface;

a support structure configured to support the substrate, the support structure comprising:

a first portion extending substantially parallel to the edge surface, wherein the substrate is configured to be supported by the first portion;

a second portion extending over an edge portion of the top surface of the panel; and

a sealing element configured to rest on the edge portion of the top surface and further configured to be fitted between the edge portion of the top surface and the second portion of the support structure.

2. The touch sensing apparatus according to claim **1**, wherein the substrate is affixed to the first portion of the support structure.

3. The touch sensing apparatus according to claim **1**, wherein the support structure is configured to be attached to a display support, and wherein the display support is configured to support a display.

4. The touch sensing apparatus according to claim **3**, wherein the support structure further comprises a recess configured to interlock with a corresponding mating feature of the display support.

5. The touch sensing apparatus according to claim **1**, wherein the support structure is formed from an extrusion process, a drawing process, a rolling process, or a molding process.

6. The touch sensing apparatus according to claim **1**, wherein the sealing element comprises a first surface facing the at least one of the plurality of light emitters and being configured to receive the transmitted light from that emitter and a second surface configured to receive light propagating in the plane extending over the touch surface.

7. The touch sensing apparatus according to claim **6**, wherein the first surface is tilted relative to the at least one of the plurality of light emitters.

8. The touch sensing apparatus according to claim **6**, wherein the sealing element comprises a protrusion or a recess to interlock with a corresponding mating feature on the second portion of the support structure.

9. The touch sensing apparatus according to claim **1**, wherein the support structure is formed from a single monolithic piece of a material.

10. The touch sensing apparatus according to claim **1**, wherein the sealing element is formed from a single monolithic piece of a material.

11. The touch sensing apparatus according to claim **1**, wherein the sealing element comprises an optically active element or an optically passive element.

12. The touch sensing apparatus according to claim **1**, wherein the sealing element is configured to inhibit ingress of a contaminant toward the at least one of the plurality of light emitters.

13. The touch sensing apparatus according to claim **1**, wherein the sealing element comprises one or more optical elements that refract, deflect, divert or focus light beams.

14. The touch sensing apparatus according to claim **1**, further comprising a plurality of light detectors arranged along the periphery of the panel.

15. The touch sensing apparatus according to claim **1**, wherein the substrate is directly joined to the first portion of the support structure.

* * * * *