US010775935B2

(12) **United States Patent**
Kocovski et al.

(10) **Patent No.: US 10,775,935 B2**
(45) **Date of Patent: Sep. 15, 2020**

(54) **TOUCH DEVICE**

(71) Applicant: **Flatfrog Laboratories AB**, Lund (SE)

(72) Inventors: **Aleksander Kocovski**, Malmo (SE); **Hakan Bergstrom**, Torna-Hallestad (SE); **Jens Thorvinger**, Lund (SE)

(73) Assignee: **FlatFrog Laboratories AB**, Lund (SE)

(*) Notice: Subject to any disclaimer, the term of this patent is extended or adjusted under 35 U.S.C. 154(b) by 0 days.

(21) Appl. No.: **16/706,438**

(22) Filed: **Dec. 6, 2019**

(65) **Prior Publication Data**

US 2020/0110508 A1 Apr. 9, 2020

Related U.S. Application Data

(63) Continuation of application No. 16/403,283, filed on May 3, 2019, which is a continuation of application

(Continued)

(30) **Foreign Application Priority Data**

Dec. 7, 2016 (SE) 1630294

(51) **Int. Cl.**

G06F 3/042	(2006.01)
G06F 1/16	(2006.01)
G06F 3/041	(2006.01)

(52) **U.S. Cl.**

CPC ***G06F 3/0421*** (2013.01); ***G06F 1/16*** (2013.01); ***G06F 1/1652*** (2013.01); ***G06F 3/041*** (2013.01);

(Continued)

(58) **Field of Classification Search**

CPC G06F 3/0421; G06F 2203/04103

See application file for complete search history.

(56) **References Cited**

U.S. PATENT DOCUMENTS

3,440,426	A	4/1969	Bush
3,553,680	A	1/1971	Cooreman

(Continued)

FOREIGN PATENT DOCUMENTS

AU	2008 280 952	A1	3/2009
CN	201233592	Y	5/2009

(Continued)

OTHER PUBLICATIONS

Ahn, Y., et al., "A slim and wide multi-touch tabletop interface and its applications," BigComp2014, IEEE, 2014, in 6 pages.

(Continued)

Primary Examiner — Vinh T Lam

(74) *Attorney, Agent, or Firm* — Knobbe Martens Olson & Bear, LLP

(57) **ABSTRACT**

An assembly for holding and controlling curvature of a glass plate for an optical touch sensitive system is described. The assembly comprising a first frame element extending in a first plane and configured to extend at least partially around a panel; at least one second frame element extending in a second plane and forming a support portion for the plate, and at least one spacing element positioned at least partially between the support portion and the first frame element. The spacing element us configured to control a curvature of the first frame element and wherein the at least one second frame element is configured to engage the plate at the support portion, is attached to the first frame element, and is tiltable, by controlling the curvature of the first frame element with said spacing element, to control a curvature of the plate.

14 Claims, 54 Drawing Sheets

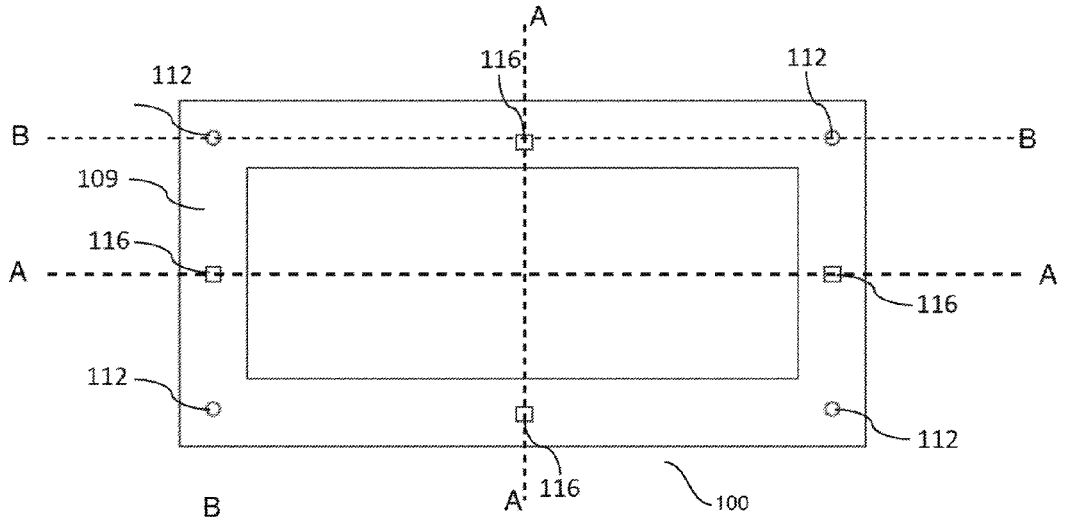

Related U.S. Application Data

No. 16/190,907, filed on Nov. 14, 2018, now Pat. No. 10,282,035, which is a continuation of application No. PCT/SE2017/051233, filed on Dec. 7, 2017.

(52) **U.S. Cl.**
CPC *G06F 2203/04102* (2013.01); *G06F 2203/04103* (2013.01)

(56) **References Cited**

U.S. PATENT DOCUMENTS

3,673,327 A 6/1972 Johnson et al.
4,129,384 A 12/1978 Walker et al.
4,180,702 A 12/1979 Sick et al.
4,209,255 A 6/1980 Heynau et al.
4,213,707 A 7/1980 Evans, Jr.
4,254,333 A 3/1981 Bergström
4,254,407 A 3/1981 Tipon
4,294,543 A 10/1981 Apple et al.
4,346,376 A 8/1982 Mallos
4,420,261 A 12/1983 Barlow et al.
4,484,179 A 11/1984 Kasday
4,507,557 A 3/1985 Tsikos
4,521,112 A 6/1985 Kuwabara et al.
4,542,375 A 9/1985 Alles et al.
4,550,250 A 10/1985 Mueller et al.
4,593,191 A 6/1986 Alles
4,673,918 A 6/1987 Adler et al.
4,688,933 A 8/1987 Lapeyre
4,688,993 A 8/1987 Ferris et al.
4,692,809 A 9/1987 Beining et al.
4,710,760 A 12/1987 Kasday
4,736,191 A 4/1988 Matzke et al.
4,737,626 A 4/1988 Hasegawa
4,746,770 A 5/1988 McAvinney
4,751,379 A 6/1988 Sasaki et al.
4,752,655 A 6/1988 Tajiri et al.
4,772,763 A 9/1988 Garwin et al.
4,782,328 A 11/1988 Denlinger
4,812,833 A 3/1989 Shimauchi
4,837,430 A 6/1989 Hasegawa
4,868,912 A 9/1989 Doering
4,891,829 A 1/1990 Deckman et al.
4,916,712 A 4/1990 Bender
4,933,544 A 6/1990 Tamaru
4,949,079 A 8/1990 Loebner
4,986,662 A 1/1991 Bures
4,988,983 A 1/1991 Wehrer
5,065,185 A 11/1991 Powers et al.
5,073,770 A 12/1991 Lowbner
5,105,186 A 4/1992 May
5,159,322 A 10/1992 Loebner
5,166,668 A 11/1992 Aoyagi
5,227,622 A 7/1993 Suzuki
5,248,856 A 9/1993 Mallicoat
5,254,407 A 10/1993 Sergerie et al.
5,345,490 A 9/1994 Finnigan et al.
5,383,022 A 1/1995 Kaser
5,483,261 A 1/1996 Yasutake
5,484,966 A 1/1996 Segen
5,499,098 A 3/1996 Ogawa
5,502,568 A 3/1996 Ogawa et al.
5,525,764 A 6/1996 Junkins et al.
5,526,422 A 6/1996 Keen
5,539,514 A 7/1996 Shishido et al.
5,570,181 A 10/1996 Yasuo et al.
5,572,251 A 11/1996 Ogawa
5,577,501 A 11/1996 Flohr et al.
5,600,105 A 2/1997 Fukuzaki et al.
5,608,550 A 3/1997 Epstein et al.
5,672,852 A 9/1997 Fukuzaki et al.
5,679,930 A 10/1997 Katsurahira
5,686,942 A 11/1997 Ball
5,688,933 A 11/1997 Evans et al.
5,729,249 A 3/1998 Yasutake
5,736,686 A 4/1998 Perret, Jr. et al.
5,740,224 A 4/1998 Müller et al.
5,764,223 A 6/1998 Chang et al.
5,767,517 A 6/1998 Hawkins
5,775,792 A 7/1998 Wiese
5,945,980 A 8/1999 Moissev et al.
5,945,981 A 8/1999 Paull et al.
5,959,617 A 9/1999 Bird et al.
6,031,524 A 2/2000 Kunert
6,061,177 A 5/2000 Fujimoto
6,067,079 A 5/2000 Shieh
6,122,394 A 9/2000 Neukermans et al.
6,141,104 A 10/2000 Schulz et al.
6,172,667 B1 1/2001 Sayag
6,175,999 B1 1/2001 Sloan et al.
6,227,667 B1 5/2001 Halldorsson et al.
6,229,529 B1 5/2001 Yano et al.
6,333,735 B1 12/2001 Anvekar
6,366,276 B1 4/2002 Kunimatsu et al.
6,380,732 B1 4/2002 Gilboa
6,380,740 B1 4/2002 Laub
6,390,370 B1 5/2002 Plesko
6,429,857 B1 8/2002 Masters et al.
6,452,996 B1 9/2002 Hsieh
6,476,797 B1 11/2002 Kurihara et al.
6,492,633 B2 12/2002 Nakazawa et al.
6,495,832 B1 12/2002 Kirby
6,504,143 B2 1/2003 Koops et al.
6,529,327 B1 3/2003 Graindorge
6,538,644 B1 3/2003 Muraoka
6,587,099 B2 7/2003 Takekawa
6,648,485 B1 11/2003 Colgan et al.
6,660,964 B1 12/2003 Benderly
6,664,498 B2 12/2003 Forsman et al.
6,664,952 B2 12/2003 Iwamoto et al.
6,690,363 B2 2/2004 Newton
6,707,027 B2 3/2004 Liess et al.
6,738,051 B2 5/2004 Boyd et al.
6,748,098 B1 6/2004 Rosenfeld
6,784,948 B2 8/2004 Kawashima et al.
6,799,141 B1 9/2004 Stoustrup et al.
6,806,871 B1 10/2004 Yasue
6,927,384 B2 8/2005 Reime et al.
6,940,286 B2 9/2005 Wang et al.
6,965,836 B2 11/2005 Richardson
6,972,753 B1 12/2005 Kimura et al.
6,985,137 B2 1/2006 Kaikuranta
7,042,444 B2 5/2006 Cok
7,084,859 B1 8/2006 Pryor
7,087,907 B1 8/2006 Lalovic et al.
7,133,031 B2 11/2006 Wang et al.
7,176,904 B2 2/2007 Satoh
7,199,932 B2 4/2007 Sugiura
7,359,041 B2 4/2008 Xie et al.
7,397,418 B1 7/2008 Doerry et al.
7,432,893 B2 10/2008 Ma et al.
7,435,940 B2 10/2008 Eliasson et al.
7,436,443 B2 10/2008 Hirunuma et al.
7,442,914 B2 10/2008 Eliasson et al.
7,465,914 B2 12/2008 Eliasson et al.
7,613,375 B2 11/2009 Shimizu
7,629,968 B2 12/2009 Miller et al.
7,646,833 B1 1/2010 He et al.
7,653,883 B2 1/2010 Hotelling et al.
7,655,901 B2 2/2010 Idzik et al.
7,705,835 B2 4/2010 Eikman
7,729,056 B2 6/2010 Hwang et al.
7,847,789 B2 12/2010 Kolmykov-Zotov et al.
7,855,716 B2 12/2010 McCreary et al.
7,859,519 B2 12/2010 Tulbert
7,924,272 B2 4/2011 Boer et al.
7,932,899 B2 4/2011 Newton et al.
7,969,410 B2 6/2011 Kakarala
7,995,039 B2 8/2011 Eliasson et al.
8,013,845 B2 9/2011 Ostergaard et al.
8,031,186 B2 10/2011 Ostergaard
8,077,147 B2 12/2011 Krah et al.
8,093,545 B2 1/2012 Leong et al.
8,094,136 B2 1/2012 Eliasson et al.

(56) **References Cited**

U.S. PATENT DOCUMENTS

8,094,910 B2 1/2012 Xu
8,149,211 B2 4/2012 Hayakawa et al.
8,218,154 B2 7/2012 Østergaard et al.
8,274,495 B2 9/2012 Lee
8,325,158 B2 12/2012 Yatsuda et al.
8,339,379 B2 12/2012 Goertz et al.
8,350,827 B2 1/2013 Chung et al.
8,384,010 B2 2/2013 Hong et al.
8,407,606 B1 3/2013 Davidson et al.
8,441,467 B2 5/2013 Han
8,445,834 B2 5/2013 Hong et al.
8,466,901 B2 6/2013 Yen et al.
8,482,547 B2 7/2013 Cobon et al.
8,542,217 B2 9/2013 Wassvik et al.
8,567,257 B2 10/2013 Van Steenberge et al.
8,581,884 B2 11/2013 Fåhraeus et al.
8,624,858 B2 1/2014 Fyke et al.
8,686,974 B2 4/2014 Christiansson et al.
8,692,807 B2 4/2014 Føhraeus et al.
8,716,614 B2 5/2014 Wassvik
8,727,581 B2 5/2014 Saccomanno
8,745,514 B1 6/2014 Davidson
8,780,066 B2 7/2014 Christiansson et al.
8,830,181 B1 9/2014 Clark et al.
8,860,696 B2 10/2014 Wassvik et al.
8,872,098 B2 10/2014 Bergström et al.
8,872,801 B2 10/2014 Bergström et al.
8,884,900 B2 11/2014 Wassvik
8,890,843 B2 11/2014 Wassvik et al.
8,890,849 B2 11/2014 Christiansson et al.
8,896,575 B2 * 11/2014 Goertz G06F 3/042 178/18.09
8,902,196 B2 * 12/2014 Goertz G06F 3/0416 345/173
8,928,590 B1 1/2015 El Dokor
8,963,886 B2 2/2015 Wassvik
8,982,084 B2 3/2015 Christiansson et al.
9,001,086 B1 4/2015 Saini
9,024,896 B2 5/2015 Chen
9,024,916 B2 5/2015 Christiansson
9,035,909 B2 * 5/2015 Christiansson G06F 3/0421 345/175
9,052,771 B2 * 6/2015 Goertz G06F 3/0416
9,063,614 B2 * 6/2015 Pettersson G06F 3/0416
9,063,617 B2 6/2015 Eliasson et al.
9,086,763 B2 7/2015 Johansson et al.
9,128,250 B2 * 9/2015 Charters G02B 6/4298
9,134,854 B2 9/2015 Wassvik et al.
9,158,401 B2 10/2015 Christiansson
9,158,415 B2 10/2015 Song et al.
9,195,344 B2 * 11/2015 Goertz G06F 3/0416
9,201,520 B2 12/2015 Benko et al.
9,207,800 B1 12/2015 Eriksson et al.
9,213,445 B2 12/2015 King et al.
9,274,645 B2 3/2016 Christiansson et al.
9,280,237 B2 3/2016 Kukulj
9,317,168 B2 4/2016 Christiansson et al.
9,323,396 B2 4/2016 Han et al.
9,366,565 B2 6/2016 Uvnäs
9,377,884 B2 6/2016 Christiansson et al.
9,389,730 B2 * 7/2016 Goertz G06F 3/042
9,389,732 B2 7/2016 Craven-Bartle
9,411,444 B2 8/2016 Christiansson et al.
9,411,464 B2 8/2016 Wallander et al.
9,430,079 B2 8/2016 Christiansson et al.
9,442,574 B2 9/2016 Fåhraeus et al.
9,471,170 B2 * 10/2016 Goertz G06F 3/0416
9,547,393 B2 1/2017 Christiansson et al.
9,552,103 B2 1/2017 Craven-Bartle et al.
9,557,846 B2 1/2017 Baharav et al.
9,588,619 B2 3/2017 Christiansson et al.
9,594,467 B2 3/2017 Christiansson et al.
9,618,682 B2 4/2017 Yoon et al.
9,626,018 B2 4/2017 Christiansson et al.
9,626,040 B2 4/2017 Wallander et al.
9,639,210 B2 5/2017 Wallander et al.
9,678,602 B2 6/2017 Wallander
9,684,414 B2 6/2017 Christiansson et al.
9,710,101 B2 7/2017 Christiansson et al.
9,874,978 B2 1/2018 Wall
10,013,107 B2 7/2018 Christiansson et al.
10,019,113 B2 7/2018 Christiansson et al.
10,282,035 B2 5/2019 Kocovski et al.
10,459,589 B2 * 10/2019 Xu G06F 3/0446
2001/0002694 A1 6/2001 Nakazawa et al.
2001/0005004 A1 6/2001 Shiratsuki et al.
2001/0005308 A1 6/2001 Oishi et al.
2001/0030642 A1 10/2001 Sullivan et al.
2002/0067348 A1 6/2002 Masters et al.
2002/0075243 A1 6/2002 Newton
2002/0118177 A1 8/2002 Newton
2002/0158823 A1 10/2002 Zavracky et al.
2002/0158853 A1 10/2002 Sugawara et al.
2002/0163505 A1 11/2002 Takekawa
2003/0016450 A1 1/2003 Bluemel et al.
2003/0034439 A1 2/2003 Reime et al.
2003/0034935 A1 2/2003 Amanai et al.
2003/0048257 A1 3/2003 Mattila
2003/0052257 A1 3/2003 Sumriddetchkajorn
2003/0095399 A1 5/2003 Grenda et al.
2003/0107748 A1 6/2003 Lee
2003/0137494 A1 7/2003 Tulbert
2003/0156100 A1 8/2003 Gettemy
2003/0160155 A1 8/2003 Liess
2003/0210537 A1 11/2003 Engelmann
2003/0214486 A1 11/2003 Roberts
2004/0027339 A1 2/2004 Schulz
2004/0032401 A1 2/2004 Nakazawa et al.
2004/0090432 A1 5/2004 Takahashi et al.
2004/0130338 A1 7/2004 Wang et al.
2004/0174541 A1 9/2004 Freifeld
2004/0201579 A1 10/2004 Graham
2004/0212603 A1 10/2004 Cok
2004/0238627 A1 12/2004 Silverbrook et al.
2004/0239702 A1 12/2004 Kang et al.
2004/0245438 A1 12/2004 Payne et al.
2004/0252091 A1 12/2004 Ma et al.
2004/0252867 A1 12/2004 Lan et al.
2005/0012714 A1 1/2005 Russo et al.
2005/0041013 A1 2/2005 Tanaka
2005/0057903 A1 3/2005 Choi
2005/0073508 A1 4/2005 Pittel et al.
2005/0083293 A1 4/2005 Dixon
2005/0128190 A1 6/2005 Ryynanen
2005/0143923 A1 6/2005 Keers et al.
2005/0156914 A1 7/2005 Lipman et al.
2005/0162398 A1 7/2005 Eliasson et al.
2005/0179977 A1 8/2005 Chui et al.
2005/0200613 A1 9/2005 Kobayashi et al.
2005/0212774 A1 9/2005 Ho et al.
2005/0248540 A1 11/2005 Newton
2005/0253834 A1 11/2005 Sakamaki et al.
2005/0276053 A1 12/2005 Nortrup et al.
2006/0001650 A1 1/2006 Robbins et al.
2006/0001653 A1 1/2006 Smits
2006/0007185 A1 1/2006 Kobayashi
2006/0008164 A1 1/2006 Wu et al.
2006/0017706 A1 1/2006 Cutherell et al.
2006/0017709 A1 1/2006 Okano
2006/0033725 A1 2/2006 Marggraff et al.
2006/0038698 A1 2/2006 Chen
2006/0061861 A1 3/2006 Munro et al.
2006/0114237 A1 6/2006 Crockett et al.
2006/0132454 A1 6/2006 Chen et al.
2006/0139340 A1 6/2006 Geaghan
2006/0158437 A1 7/2006 Blythe et al.
2006/0170658 A1 8/2006 Nakamura et al.
2006/0202974 A1 9/2006 Thielman
2006/0227120 A1 10/2006 Eikman
2006/0255248 A1 11/2006 Eliasson
2006/0256092 A1 11/2006 Lee
2006/0279558 A1 12/2006 Van Delden et al.
2006/0281543 A1 12/2006 Sutton et al.
2006/0290684 A1 12/2006 Giraldo et al.

(56) **References Cited**

U.S. PATENT DOCUMENTS

2007/0014486	A1	1/2007	Schiwietz et al.
2007/0024598	A1	2/2007	Miller et al.
2007/0034783	A1	2/2007	Eliasson et al.
2007/0038691	A1	2/2007	Candes et al.
2007/0052684	A1	3/2007	Gruhlke et al.
2007/0070056	A1	3/2007	Sato et al.
2007/0075648	A1	4/2007	Blythe et al.
2007/0120833	A1	5/2007	Yamaguchi et al.
2007/0125937	A1	6/2007	Eliasson et al.
2007/0152985	A1	7/2007	Ostergaard et al.
2007/0201042	A1	8/2007	Eliasson et al.
2007/0296688	A1	12/2007	Nakamura et al.
2008/0006766	A1	1/2008	Oon et al.
2008/0007540	A1	1/2008	Ostergaard
2008/0007541	A1	1/2008	Eliasson et al.
2008/0007542	A1	1/2008	Eliasson et al.
2008/0011944	A1	1/2008	Chua et al.
2008/0029691	A1	2/2008	Han
2008/0036743	A1	2/2008	Westerman et al.
2008/0062150	A1	3/2008	Lee
2008/0068691	A1	3/2008	Miyatake
2008/0074401	A1	3/2008	Chung et al.
2008/0080811	A1	4/2008	Deane
2008/0088603	A1	4/2008	Eliasson et al.
2008/0121442	A1	5/2008	Boer et al.
2008/0122792	A1	5/2008	Izadi et al.
2008/0122803	A1	5/2008	Izadi et al.
2008/0130979	A1	6/2008	Run et al.
2008/0133265	A1	6/2008	Silkaitis et al.
2008/0150846	A1	6/2008	Chung et al.
2008/0150848	A1	6/2008	Chung et al.
2008/0151126	A1	6/2008	Yu
2008/0158176	A1	7/2008	Land et al.
2008/0189046	A1	8/2008	Eliasson et al.
2008/0192025	A1	8/2008	Jaeger et al.
2008/0238433	A1	10/2008	Joutsenoja et al.
2008/0246388	A1	10/2008	Cheon et al.
2008/0252619	A1	10/2008	Crockett et al.
2008/0266266	A1	10/2008	Kent et al.
2008/0278460	A1	11/2008	Arnett et al.
2008/0284925	A1	11/2008	Han
2008/0291668	A1	11/2008	Aylward et al.
2008/0297482	A1	12/2008	Weiss
2009/0000831	A1	1/2009	Miller et al.
2009/0002340	A1	1/2009	Van Genechten
2009/0006292	A1	1/2009	Block
2009/0040786	A1	2/2009	Mori
2009/0066647	A1	3/2009	Kerr et al.
2009/0067178	A1	3/2009	Huang et al.
2009/0073142	A1	3/2009	Yamashita et al.
2009/0077501	A1	3/2009	Partridge et al.
2009/0085894	A1	4/2009	Gandhi et al.
2009/0091554	A1	4/2009	Keam
2009/0115919	A1	5/2009	Tanaka et al.
2009/0122020	A1	5/2009	Eliasson et al.
2009/0122027	A1	5/2009	Newton
2009/0128508	A1	5/2009	Sohn et al.
2009/0135162	A1	5/2009	Van De Wijdeven et al.
2009/0143141	A1	6/2009	Wells et al.
2009/0153519	A1	6/2009	Suarez Rovere
2009/0161026	A1	6/2009	Wu et al.
2009/0168459	A1	7/2009	Holman et al.
2009/0187842	A1	7/2009	Collins et al.
2009/0189857	A1	7/2009	Benko et al.
2009/0189874	A1	7/2009	Chene et al.
2009/0189878	A1	7/2009	Goertz et al.
2009/0219256	A1	9/2009	Newton
2009/0229892	A1	9/2009	Fisher et al.
2009/0251439	A1	10/2009	Westerman et al.
2009/0256817	A1	10/2009	Perlin et al.
2009/0259967	A1	10/2009	Davidson et al.
2009/0267919	A1	10/2009	Chao et al.
2009/0273794	A1	11/2009	Østergaard et al.
2009/0278816	A1	11/2009	Colson
2009/0297009	A1	12/2009	Xu et al.
2010/0033444	A1	2/2010	Kobayashi
2010/0045629	A1	2/2010	Newton
2010/0060896	A1	3/2010	Van De Wijdeven et al.
2010/0066016	A1	3/2010	Van De Wijdeven et al.
2010/0066704	A1	3/2010	Kasai
2010/0073318	A1	3/2010	Hu et al.
2010/0078545	A1	4/2010	Leong et al.
2010/0079407	A1	4/2010	Suggs et al.
2010/0079408	A1	4/2010	Leong et al.
2010/0097345	A1	4/2010	Jang et al.
2010/0097348	A1	4/2010	Park et al.
2010/0097353	A1	4/2010	Newton
2010/0103133	A1	4/2010	Park et al.
2010/0125438	A1	5/2010	Audet
2010/0127975	A1	5/2010	Jensen
2010/0134435	A1	6/2010	Kimura et al.
2010/0142823	A1	6/2010	Wang et al.
2010/0187422	A1	7/2010	Kothari et al.
2010/0193259	A1	8/2010	Wassvik
2010/0229091	A1	9/2010	Homma et al.
2010/0238139	A1	9/2010	Goertz et al.
2010/0245292	A1	9/2010	Wu
2010/0265170	A1	10/2010	Norieda
2010/0277436	A1	11/2010	Feng et al.
2010/0283785	A1	11/2010	Satulovsky
2010/0284596	A1	11/2010	Miao et al.
2010/0289754	A1	11/2010	Sleeman et al.
2010/0295821	A1	11/2010	Chang et al.
2010/0302196	A1	12/2010	Han et al.
2010/0302209	A1	12/2010	Large
2010/0302210	A1	12/2010	Han et al.
2010/0302240	A1	12/2010	Lettvin
2010/0315379	A1	12/2010	Allard et al.
2010/0321328	A1	12/2010	Chang et al.
2010/0322550	A1	12/2010	Trott
2011/0043490	A1	2/2011	Powell et al.
2011/0049388	A1	3/2011	Delaney et al.
2011/0050649	A1	3/2011	Newton et al.
2011/0051394	A1	3/2011	Bailey
2011/0068256	A1	3/2011	Hong et al.
2011/0069039	A1	3/2011	Lee et al.
2011/0069807	A1	3/2011	Dennerlein et al.
2011/0074725	A1	3/2011	Westerman et al.
2011/0074734	A1	3/2011	Wassvik et al.
2011/0074735	A1	3/2011	Wassvik et al.
2011/0080361	A1	4/2011	Miller et al.
2011/0084939	A1	4/2011	Gepner et al.
2011/0090176	A1	4/2011	Christiansson et al.
2011/0102374	A1	5/2011	Wassvik et al.
2011/0115748	A1	5/2011	Xu
2011/0121323	A1	5/2011	Wu et al.
2011/0122075	A1	5/2011	Seo et al.
2011/0122091	A1	5/2011	King et al.
2011/0122094	A1	5/2011	Tsang et al.
2011/0134079	A1	6/2011	Stark
2011/0141062	A1	6/2011	Yu et al.
2011/0147569	A1	6/2011	Drumm
2011/0157095	A1	6/2011	Drumm
2011/0157096	A1	6/2011	Drumm
2011/0163996	A1	7/2011	Wassvik et al.
2011/0163997	A1	7/2011	Kim
2011/0163998	A1	7/2011	Goertz et al.
2011/0169780	A1	7/2011	Goertz et al.
2011/0175852	A1	7/2011	Goertz et al.
2011/0205186	A1	8/2011	Newton et al.
2011/0216042	A1	9/2011	Wassvik et al.
2011/0221705	A1	9/2011	Yi et al.
2011/0221997	A1	9/2011	Kim et al.
2011/0227036	A1	9/2011	Vaufrey
2011/0227874	A1	9/2011	Fåhraeus et al.
2011/0234537	A1	9/2011	Kim et al.
2011/0254864	A1	10/2011	Tsuchikawa et al.
2011/0261020	A1	10/2011	Song et al.
2011/0267296	A1	11/2011	Noguchi et al.
2011/0291989	A1	12/2011	Lee
2011/0298743	A1	12/2011	Machida et al.
2011/0309325	A1	12/2011	Park et al.
2011/0310045	A1	12/2011	Toda et al.
2012/0019448	A1	1/2012	Pitkanen et al.

(56) **References Cited**

U.S. PATENT DOCUMENTS

2012/0026408 A1 2/2012 Lee et al.
2012/0038593 A1 2/2012 Rönkä et al.
2012/0062474 A1 3/2012 Weishaupt et al.
2012/0062492 A1 3/2012 Katoh
2012/0068973 A1 3/2012 Christiansson et al.
2012/0086673 A1 4/2012 Chien et al.
2012/0089348 A1* 4/2012 Perlin G06F 3/0416 702/41
2012/0110447 A1 5/2012 Chen
2012/0131490 A1 5/2012 Lin et al.
2012/0141001 A1 6/2012 Zhang et al.
2012/0146930 A1 6/2012 Lee
2012/0153134 A1 6/2012 Bergström et al.
2012/0154338 A1 6/2012 Bergström et al.
2012/0162142 A1 6/2012 Christiansson et al.
2012/0162144 A1 6/2012 Fåhraeus et al.
2012/0169672 A1 7/2012 Christiansson
2012/0170056 A1 7/2012 Jakobsen et al.
2012/0181419 A1 7/2012 Momtahan
2012/0182266 A1 7/2012 Han
2012/0188206 A1 7/2012 Sparf et al.
2012/0191993 A1 7/2012 Drader et al.
2012/0200532 A1 8/2012 Powell et al.
2012/0200538 A1 8/2012 Christiansson et al.
2012/0212441 A1 8/2012 Christiansson et al.
2012/0217882 A1 8/2012 Wong et al.
2012/0218229 A1 8/2012 Drumm
2012/0223916 A1* 9/2012 Kukulj G06F 3/0428 345/175
2012/0249478 A1 10/2012 Chang et al.
2012/0256882 A1 10/2012 Christiansson et al.
2012/0268403 A1 10/2012 Christiansson
2012/0268427 A1 10/2012 Slobodin
2012/0274559 A1 11/2012 Mathai et al.
2012/0305755 A1 12/2012 Hong et al.
2012/0313865 A1 12/2012 Pearce
2013/0021300 A1 1/2013 Wassvik
2013/0021302 A1 1/2013 Drumm
2013/0027404 A1 1/2013 Sarnoff
2013/0044073 A1* 2/2013 Christiansson G06F 3/042 345/173
2013/0055080 A1 2/2013 Komer et al.
2013/0076697 A1 3/2013 Goertz et al.
2013/0082980 A1 4/2013 Gruhlke et al.
2013/0106709 A1 5/2013 Simmons
2013/0107569 A1 5/2013 Suganuma
2013/0113715 A1 5/2013 Grant et al.
2013/0120320 A1 5/2013 Liu et al.
2013/0125016 A1 5/2013 Pallakoff et al.
2013/0127790 A1 5/2013 Wassvik
2013/0135258 A1 5/2013 King et al.
2013/0135259 A1 5/2013 King et al.
2013/0141388 A1 6/2013 Ludwig et al.
2013/0141395 A1 6/2013 Holmgren et al.
2013/0154983 A1 6/2013 Christiansson et al.
2013/0155027 A1 6/2013 Holmgren et al.
2013/0155655 A1 6/2013 Lee et al.
2013/0158504 A1 6/2013 Ruchti et al.
2013/0181896 A1 7/2013 Gruhlke et al.
2013/0181953 A1 7/2013 Hinckley et al.
2013/0187891 A1 7/2013 Eriksson et al.
2013/0201142 A1 8/2013 Suarez Rovere
2013/0222346 A1 8/2013 Chen et al.
2013/0234991 A1 9/2013 Sparf
2013/0241887 A1 9/2013 Sharma
2013/0249833 A1 9/2013 Christiansson et al.
2013/0269867 A1 10/2013 Trott
2013/0275082 A1 10/2013 Follmer et al.
2013/0285920 A1 10/2013 Colley
2013/0285968 A1 10/2013 Christiansson et al.
2013/0300714 A1 11/2013 Goh et al.
2013/0300716 A1 11/2013 Craven-Bartle et al.
2013/0307795 A1 11/2013 Suarez Rovere
2013/0321740 A1 12/2013 An et al.
2013/0342490 A1 12/2013 Wallander et al.
2014/0002400 A1 1/2014 Christiansson et al.
2014/0028575 A1 1/2014 Parivar et al.
2014/0028604 A1 1/2014 Morinaga et al.
2014/0028629 A1 1/2014 Drumm et al.
2014/0036203 A1 2/2014 Guillou et al.
2014/0055421 A1 2/2014 Christiansson et al.
2014/0063853 A1 3/2014 Nichol et al.
2014/0071653 A1 3/2014 Thompson et al.
2014/0085241 A1 3/2014 Christiansson et al.
2014/0092052 A1 4/2014 Grunthaner et al.
2014/0098032 A1 4/2014 Ng et al.
2014/0098058 A1 4/2014 Baharav et al.
2014/0109219 A1 4/2014 Rohrweck et al.
2014/0125633 A1 5/2014 Fåhraeus et al.
2014/0139467 A1 5/2014 Ghosh et al.
2014/0160762 A1 6/2014 Dudik et al.
2014/0192023 A1 7/2014 Hoffman
2014/0225868 A1* 8/2014 Huang G02B 13/18 345/175
2014/0232669 A1 8/2014 Ohlsson et al.
2014/0237401 A1 8/2014 Krus et al.
2014/0237408 A1 8/2014 Ohlsson et al.
2014/0237422 A1 8/2014 Ohlsson et al.
2014/0253520 A1 9/2014 Cueto et al.
2014/0253831 A1 9/2014 Craven-Bartle
2014/0259029 A1 9/2014 Choi et al.
2014/0267124 A1 9/2014 Christiansson et al.
2014/0292701 A1 10/2014 Christiansson et al.
2014/0300572 A1 10/2014 Ohlsson et al.
2014/0320460 A1 10/2014 Johansson et al.
2014/0347325 A1 11/2014 Wallander et al.
2014/0362046 A1 12/2014 Yoshida
2014/0368471 A1 12/2014 Christiansson et al.
2014/0375607 A1 12/2014 Christiansson et al.
2015/0002386 A1 1/2015 Mankowski et al.
2015/0009687 A1 1/2015 Lin
2015/0015497 A1 1/2015 Leigh
2015/0035774 A1 2/2015 Christiansson et al.
2015/0035803 A1 2/2015 Wassvik et al.
2015/0053850 A1 2/2015 Uvnäs
2015/0054759 A1 2/2015 Christiansson et al.
2015/0083891 A1 3/2015 Wallander
2015/0103013 A9 4/2015 Huang
2015/0121691 A1 5/2015 Wang
2015/0130769 A1 5/2015 Björklund
2015/0131010 A1 5/2015 Sugiyama
2015/0138105 A1 5/2015 Christiansson et al.
2015/0138158 A1 5/2015 Wallander et al.
2015/0138161 A1 5/2015 Wassvik
2015/0205441 A1 7/2015 Bergström et al.
2015/0215450 A1 7/2015 Seo et al.
2015/0242055 A1 8/2015 Wallander
2015/0271481 A1 9/2015 Guthrie et al.
2015/0286698 A1 10/2015 Gagnier et al.
2015/0309662 A1* 10/2015 Wyrwas G06F 3/042 345/175
2015/0317036 A1 11/2015 Johansson et al.
2015/0324028 A1 11/2015 Wassvik et al.
2015/0331544 A1 11/2015 Bergström et al.
2015/0331545 A1 11/2015 Wassvik et al.
2015/0331546 A1* 11/2015 Craven-Bartle G02B 5/005 345/175
2015/0331547 A1 11/2015 Wassvik et al.
2015/0332655 A1 11/2015 Krus et al.
2015/0339000 A1 11/2015 Lee et al.
2015/0346856 A1 12/2015 Wassvik
2015/0346911 A1 12/2015 Christiansson
2015/0363042 A1 12/2015 Krus et al.
2015/0373864 A1 12/2015 Jung
2016/0004898 A1 1/2016 Holz
2016/0026297 A1 1/2016 Shinkai et al.
2016/0026337 A1 1/2016 Wassvik et al.
2016/0034099 A1 2/2016 Christiansson et al.
2016/0050746 A1 2/2016 Wassvik et al.
2016/0070415 A1 3/2016 Christiansson et al.
2016/0070416 A1 3/2016 Wassvik
2016/0117019 A1 4/2016 Michiaki
2016/0124546 A1 5/2016 Chen et al.
2016/0124551 A1 5/2016 Christiansson et al.

(56) **References Cited**

U.S. PATENT DOCUMENTS

2016/0077616	A1	6/2016	Durojaiye et al.	
2016/0154531	A1	6/2016	Wall	
2016/0154532	A1	6/2016	Campbell	
2016/0154533	A1	6/2016	Eriksson et al.	
2016/0202841	A1	7/2016	Christiansson et al.	
2016/0209886	A1	7/2016	Suh et al.	
2016/0216844	A1	7/2016	Bergström	
2016/0224144	A1	8/2016	Klinghult et al.	
2016/0255713	A1	9/2016	Kim et al.	
2016/0295711	A1*	10/2016	Ryu	H05K 5/03
2016/0299583	A1	10/2016	Watanabe	
2016/0299593	A1	10/2016	Christiansson et al.	
2016/0306501	A1	10/2016	Drumm et al.	
2016/0328090	A1	11/2016	Klinghult	
2016/0328091	A1	11/2016	Wassvik et al.	
2016/0334942	A1	11/2016	Wassvik	
2016/0342282	A1	11/2016	Wassvik	
2016/0357348	A1	12/2016	Wallander	
2017/0010688	A1	1/2017	Fahraeus et al.	
2017/0090090	A1	3/2017	Craven-Bartle et al.	
2017/0102827	A1	4/2017	Christiansson et al.	
2017/0115235	A1	4/2017	Ohlsson et al.	
2017/0115823	A1	4/2017	Huang et al.	
2017/0139541	A1	5/2017	Christiansson et al.	
2017/0177163	A1	6/2017	Wallander et al.	
2017/0185230	A1	6/2017	Wallander et al.	
2017/0293392	A1	10/2017	Christiansson et al.	
2017/0344185	A1	11/2017	Ohlsson et al.	
2018/0031753	A1	2/2018	Craven-Bartle et al.	
2018/0129354	A1	5/2018	Christiansson et al.	
2018/0210572	A1	7/2018	Wallander et al.	
2018/0225006	A1	8/2018	Wall	
2018/0253187	A1	9/2018	Christiansson et al.	
2018/0267672	A1	9/2018	Wassvik et al.	
2018/0275788	A1	9/2018	Christiansson et al.	
2018/0275830	A1	9/2018	Christiansson et al.	
2018/0275831	A1	9/2018	Christiansson et al.	
2019/0025984	A1*	1/2019	Weilbacher	G02B 6/102
2019/0050074	A1	2/2019	Kocovski	
2019/0196658	A1	6/2019	Skagmo et al.	
2019/0196659	A1	6/2019	Skagmo et al.	
2019/0235701	A1	8/2019	Han et al.	
2019/0196657	A1	10/2019	Skagmo et al.	

FOREIGN PATENT DOCUMENTS

CN	101644854	A	2/2010
CN	201437963	U	4/2010
CN	201 465 071	U	5/2010
CN	101019071	B	6/2012
CN	101206550	B	6/2012
CN	203 189 466	U	9/2013
CN	203 224 848	U	10/2013
CN	101075168	B	4/2014
CN	205 015 574	U	2/2016
DE	3511330	C2	5/1988
DE	68902419	T2	3/1993
DE	69000920	T2	6/1993
DE	19809934	A1	9/1999
DE	10026201	A1	12/2000
DE	102010000473	A1	8/2010
EP	0845812	B1	6/1998
EP	0600576	B1	10/1998
EP	0931731	A1	7/1999
EP	1798630	A2	6/2007
EP	0897161	B1	10/2007
EP	2088501	A1	8/2009
EP	1512989	B1	9/2009
EP	2077490	A3	1/2010
EP	1126236	B1	12/2010
EP	2314203	A1	4/2011
EP	2325735	A2	5/2011
EP	2339437	A3	10/2011
EP	2442180	A1	4/2012
EP	2466429	A1	6/2012
EP	2479642	A1	7/2012
EP	1457870	B1	8/2012
EP	2565770	A2	3/2013
EP	2765622	A2	8/2014
EP	2778849	A1	9/2014
EP	2515216	A1	3/2016
EP	3535640	A1	9/2019
FR	2172828	A1	10/1973
FR	2617619	B1	1/1990
FR	2614711	B1	3/1992
FR	2617620	B1	9/1992
FR	2676275	A1	11/1992
GB	1380144	A	1/1975
GB	2131544	B	3/1986
GB	2204126	A	11/1988
JP	2000506655	A	5/2000
JP	2000172438	A	6/2000
JP	2000259334	A	9/2000
JP	2000293311	A	10/2000
JP	2003330603	A	11/2003
JP	2005004278	A	1/2005
JP	2008506173	A	2/2008
JP	2011530124	A	12/2011
KR	100359400		7/2001
KR	100940435		2/2010
WO	WO 1984/003186	A1	8/1984
WO	WO 1999/046602	A1	9/1999
WO	WO 01/127867	A1	4/2001
WO	WO 01/84251	A2	11/2001
WO	WO 02/35460	A1	5/2002
WO	WO 02/077915	A2	10/2002
WO	WO 02/095668	A1	11/2002
WO	WO 03/076870	A1	9/2003
WO	WO 2004/032210	A2	4/2004
WO	WO 2004/081502	A2	9/2004
WO	WO 2004/081956	A2	9/2004
WO	WO 2005/026938	A2	3/2005
WO	WO 2005/029172	A2	3/2005
WO	WO 2005/029395	A2	3/2005
WO	WO 2005/125011	A1	12/2005
WO	WO 2006/095320	A2	9/2006
WO	WO 2006/124551	A2	11/2006
WO	WO 2007/003196	A2	1/2007
WO	WO 2007/058924	A2	5/2007
WO	WO 2007/112742	A1	10/2007
WO	WO 2008/004103	A2	1/2008
WO	WO 2008/007276	A2	1/2008
WO	WO 2008/017077	A2	2/2008
WO	WO 2008/034184	A1	3/2008
WO	WO 2008/039006	A1	4/2008
WO	WO 2008/068607	A2	6/2008
WO	WO 2006/124551	B1	7/2008
WO	WO 2008/017077	A4	2/2009
WO	WO 2009/048365	A1	4/2009
WO	WO 2009/077962	A2	6/2009
WO	WO 2009/102681	A2	8/2009
WO	WO 2009/137355	A2	11/2009
WO	WO 2010/006882	A2	1/2010
WO	WO 2010/006883	A2	1/2010
WO	WO 2010/006884	A2	1/2010
WO	WO 2010/006885	A2	1/2010
WO	WO 2010/006886	A2	1/2010
WO	WO 2010/015408	A1	2/2010
WO	WO 2010/046539	A1	4/2010
WO	WO 2010/056177	A1	5/2010
WO	WO 2010/064983	A2	6/2010
WO	WO 2010/081702	A2	7/2010
WO	WO 2010/112404	A1	10/2010
WO	WO 2010/123809	A2	10/2010
WO	WO 2010/134865	A1	11/2010
WO	WO 2011/028169	A1	3/2011
WO	WO 2011/028170	A1	3/2011
WO	WO 2011/049511	A1	4/2011
WO	WO 2011/049512	A1	4/2011
WO	WO 2011/049513	A1	4/2011
WO	WO 2011/057572	A1	5/2011
WO	WO 2011/078769	A1	6/2011
WO	WO 2011/082477	A1	7/2011
WO	WO 2011/139213	A1	11/2011

(56) **References Cited**

FOREIGN PATENT DOCUMENTS

WO	WO 2012/002894	A1	1/2012
WO	WO 2012/010078	A1	1/2012
WO	WO 2012/018176	A2	2/2012
WO	WO 2012/050510	A1	4/2012
WO	WO 2012/082055	A1	6/2012
WO	WO 2012/105893	A1	8/2012
WO	WO 2012/121652	A1	9/2012
WO	WO 2012/158105	A2	11/2012
WO	WO 2012/172302	A1	12/2012
WO	WO 2012/176801	A1	12/2012
WO	WO 2013/036192	A1	3/2013
WO	WO 2013/048312	A2	4/2013
WO	WO 2013/055282	A2	4/2013
WO	WO 2013/062471	A2	5/2013
WO	WO 2013/089622	A2	6/2013
WO	WO 2013/115710	A2	8/2013
WO	WO 2013/133756	A1	9/2013
WO	WO 2013/133757	A2	9/2013
WO	WO 2013/159472		10/2013
WO	WO 2013/176613	A2	11/2013
WO	WO 2013/176614	A2	11/2013
WO	WO 2013/176615	A2	11/2013
WO	WO 2014/055809	A1	4/2014
WO	WO 2014/065601		5/2014
WO	WO 2014/086084	A1	6/2014
WO	WO 2014/098744	A1	6/2014
WO	WO 2014/104967	A1	7/2014
WO	WO 2015/175586	A1	11/2015
WO	WO 2016/130074	A1	8/2016
WO	WO 2018/096430	A1	5/2018
WO	WO 2018/106172	A1	6/2018
WO	WO 2018/106176		6/2018

OTHER PUBLICATIONS

Chou, N., et al., "Generalized pseudo-polar Fourier grids and applications in regfersting optical coherence tomography images," 43rd Asilomar Conference on Signals, Systems and Computers, Nov. 2009, in 5 pages.

Fihn, M., "Touch Panel—Special Edition," Veritas et Visus, Nov. 2011, in 1 page.

Fourmont, K., "Non-Equispaced Fast Fourier Transforms with Applications to Tomography," Journal of Fourier Analysis and Applications, vol. 9, Issue 5, 2003, in 20 pages.

Iizuka, K., "Boundaries, Near-Field Optics, and Near-Field Imaging," Elements of Photonics, vol. 1: In Free Space and Special Media, Wiley & Sons, 2002, in 57 pages.

International Search Report for International App. No. PCT/SE2017/050102, dated Apr. 5, 2017, in 4 pages.

Johnson, M., "Enhanced Optical Touch Input Panel", IBM Technical Disclosure Bulletin, 1985, in 3 pages.

Kak, et al., "Principles of Computerized Tomographic Imaging", Institute of Electrical Engineers, Inc., 1999, in 333 pages.

The Laser Wall, MIT, 1997, http://web.media.mit.edu/~joep/SpectrumWeb/captions/Laser.html.

Liu, J., et al. "Multiple touch points identifying method, involves starting touch screen, driving specific emission tube, and computing and transmitting coordinate of touch points to computer system by direct lines through interface of touch screen," 2007, in 25 pages.

Natterer, F., "The Mathematics of Computerized Tomography", Society for Industrial and Applied Mathematics, 2001, in 240 pages.

Natterer, F., et al. "Fourier Reconstruction," Mathematical Methods in Image Reconstruction, Society for Industrial and Applied Mathematics, 2001, in 12 pages.

Paradiso, J.A., "Several Sensor Approaches that Retrofit Large Surfaces for Interactivity," ACM Ubicomp 2002 Workshop on Collaboration with Interactive Walls and Tables, 2002, in 8 pages.

Tedaldi, M., et al. "Refractive index mapping of layered samples using optical coherence refractometry," Proceedings of SPIE, vol. 7171, 2009, in 8 pages.

Supplementary European Search Report for European App. No. EP 16759213, dated Oct. 4, 2018, in 9 pages.

Extended European Search Report for European App. No. 16743795.3, dated Sep. 11, 2018, in 5 pages.

International Search Report for International App. No. PCT/SE2017/051224, dated Feb. 23, 2018, in 5 pages.

International Search Report for International App. No. PCT/IB2017/057201, dated Mar. 6, 2018, in 4 pages.

Extended European Search Report in European Application No. 19165019.1, dated Jul. 18, 2019 in 8 pages.

International Preliminary Report on Patentability received in International Application No. PCT/SE2017/051233, dated Jun. 11, 2019, in 6 pages.

International Search Report for International App. No. PCT/SE2018/050070, dated Apr. 25, 2018, in 4 pages.

Extended European Search Report in European Application No. 17750516.1, dated Jul. 16, 2019 in 5 pages.

Extended European Search Report in European Application No. 16873465.5, dated Jun. 25, 2019 in 9 pages.

Report on the Filing or Determination of an Action Regarding a Patent or Trademark. For U.S. Pat. No. 10,282,035, U.S. District of Delaware, dated Dec. 10, 2019, in 1 page.

Civil Cover Sheet *Flatfrog Laboratories AB* v. *Promethean LTD.* and *Promethean Inc.*, dated Dec. 10, 2019, in 1 page.

Complaint for Patent Infringement, *Flatfrog Laboratories AB* v. *Promethean LTD.* and *Promethean Inc.*, C.A. No. 19-2246, dated Dec. 10, 2019, in 83 pages.

Executed Summons in a Civil Action to Promethean Inc., C.A. No. 19-2246, dated Dec. 10, 2019 in 2 pages.

Summons in a Civil Action to Promethean Inc., C.A. No. 19-2246, dated Dec. 10, 2019 in 2 pages.

Summons in a Civil Action to Promethean Ltd., C.A. No. 19-2246, dated Dec. 10, 2019 in 2 pages.

Defendants' Answer to Second Amended Complaint and Defendant Promethean Inc.'s Counterclaims Against FlatFrog Laboratories AB., C.A. No. 19-2246, dated May 22, 2020, in 29 pages.

* cited by examiner

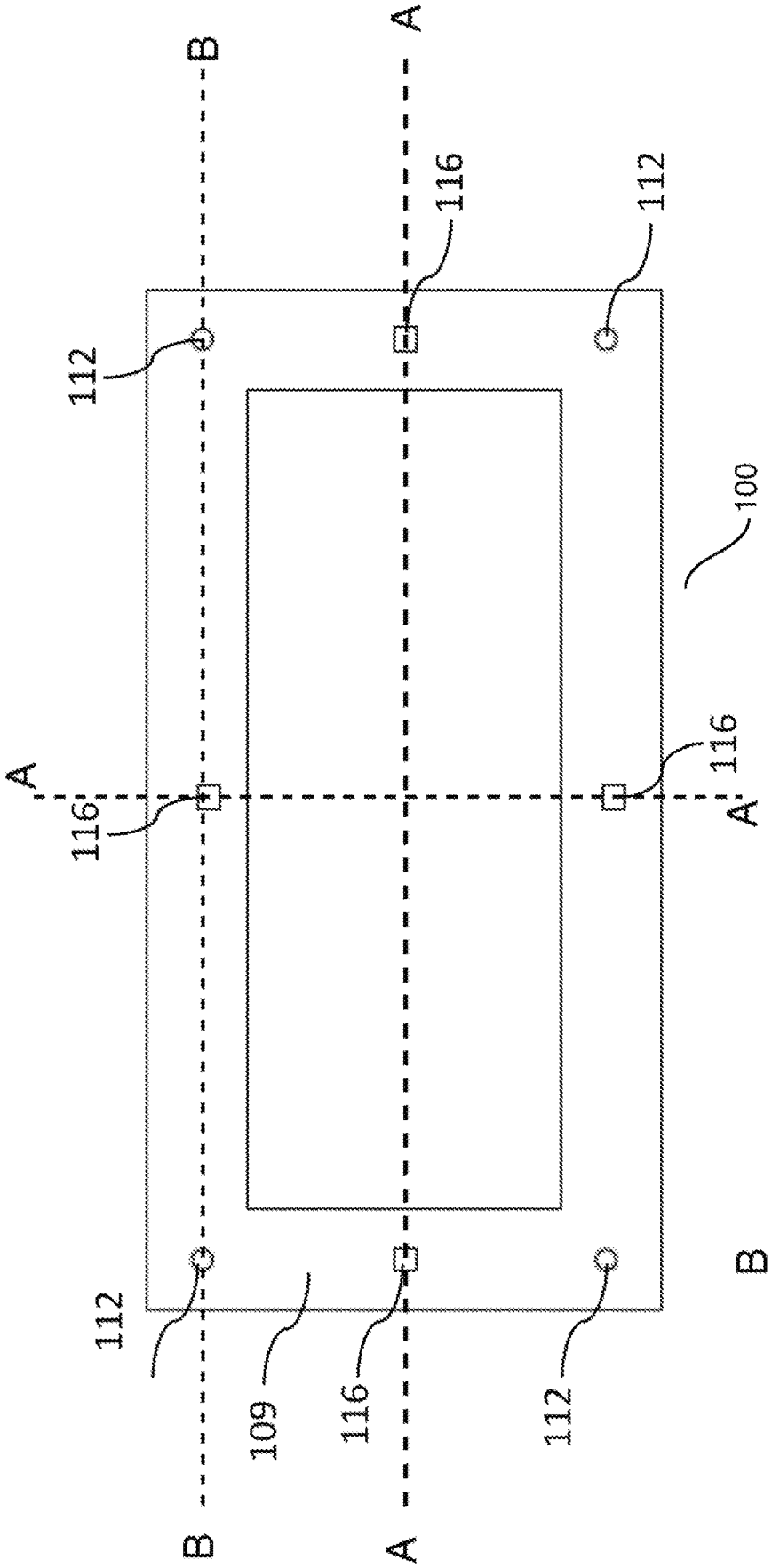

Figure 1

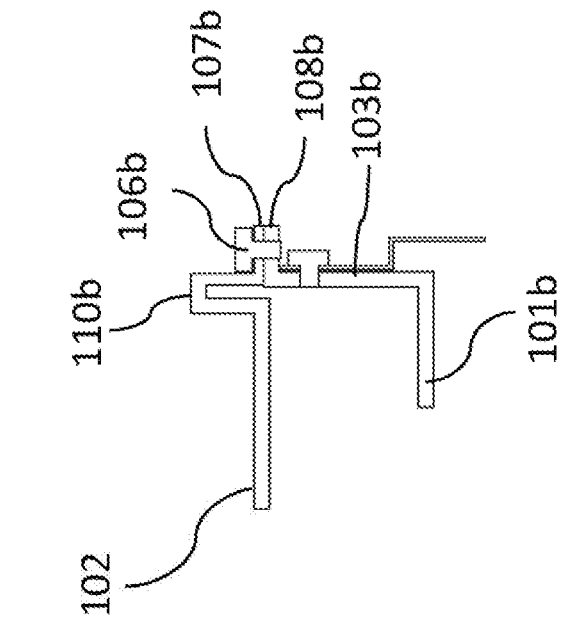
102
110b
106b
107b
108b
103b
101b

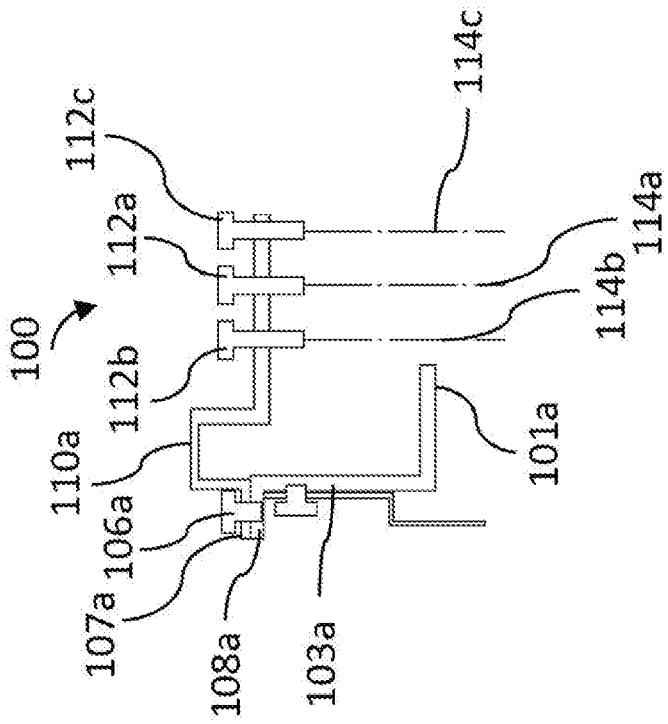
100
110a
106a
107a
108a
103a
112b
112a
112c
114c
114b
114a
101a

Figure 2a

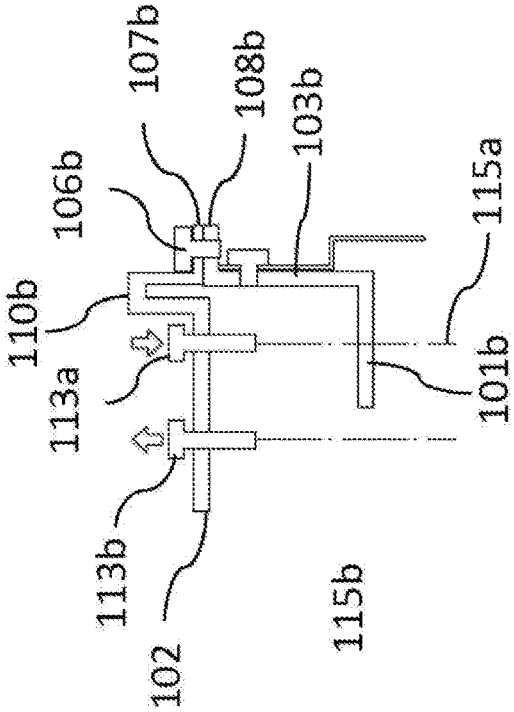
110b
113a
113b
102
106b
107b
108b
103b
115b
115a
101b

Figure 2b

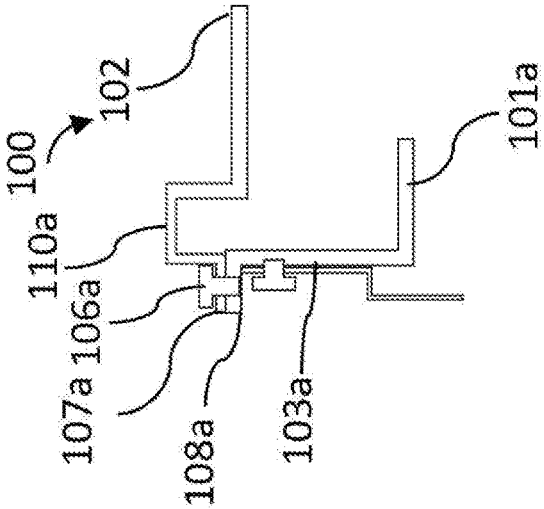
100
110a
107a
106a
108a
102
103a
101a

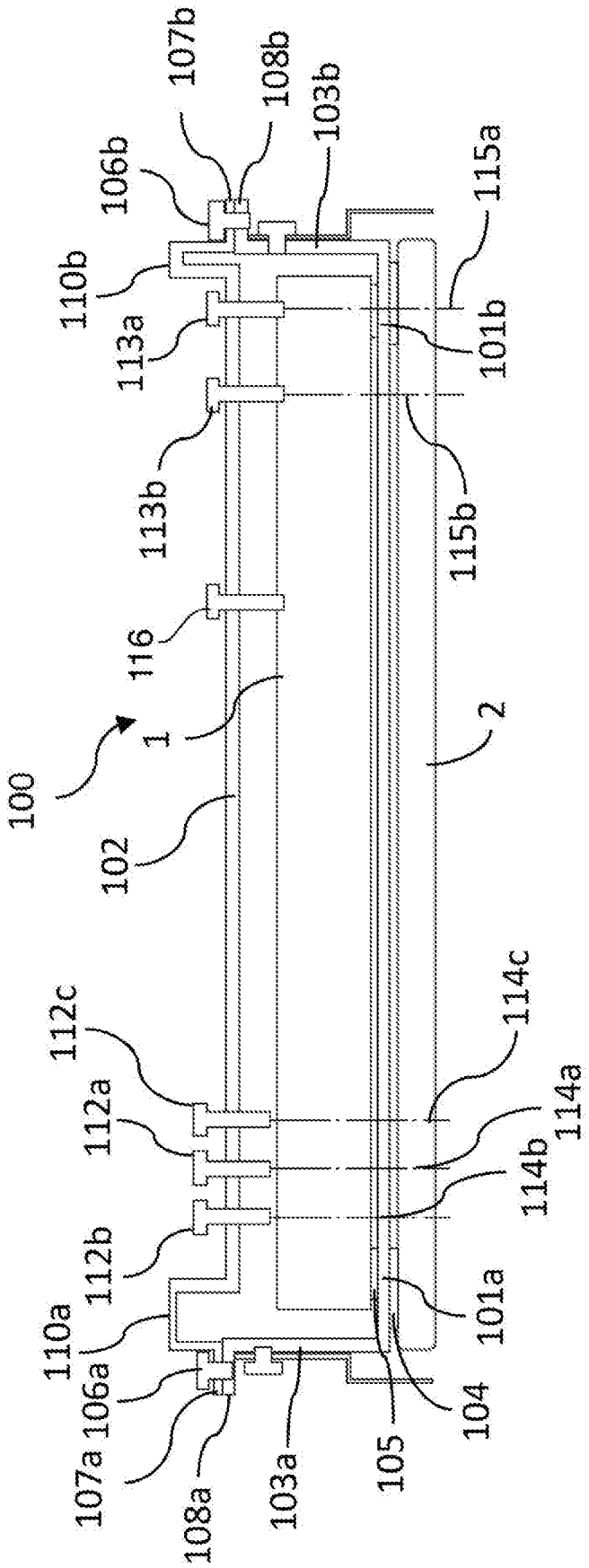
100
102
1
2
116
113b
113a
110b
106b
107b
108b
103b
115a
101b
115b
112c
112a
112b
110a
106a
107a
108a
103a
105
104
101a
114b
114a
114c

Figure 2c

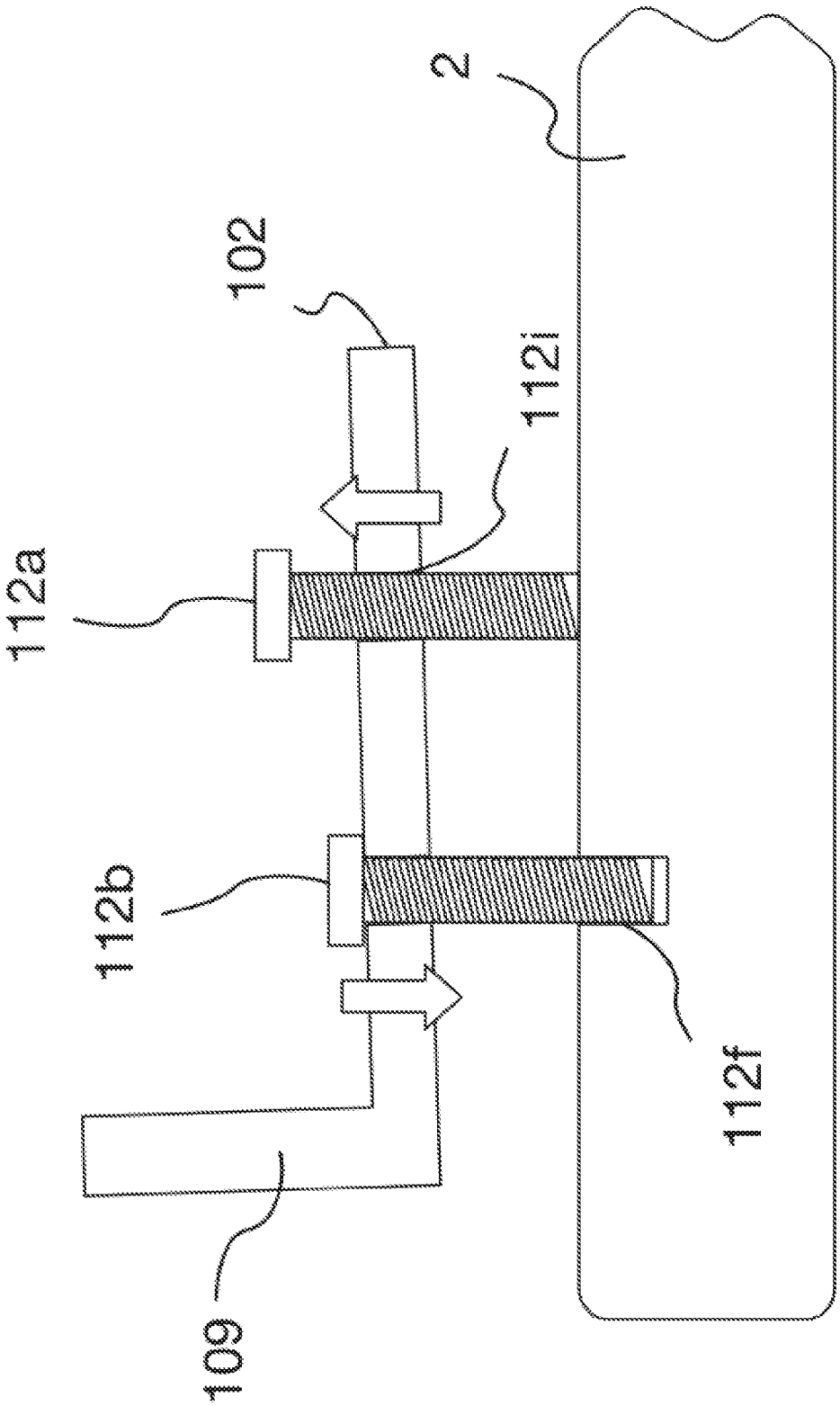

Figure 2d

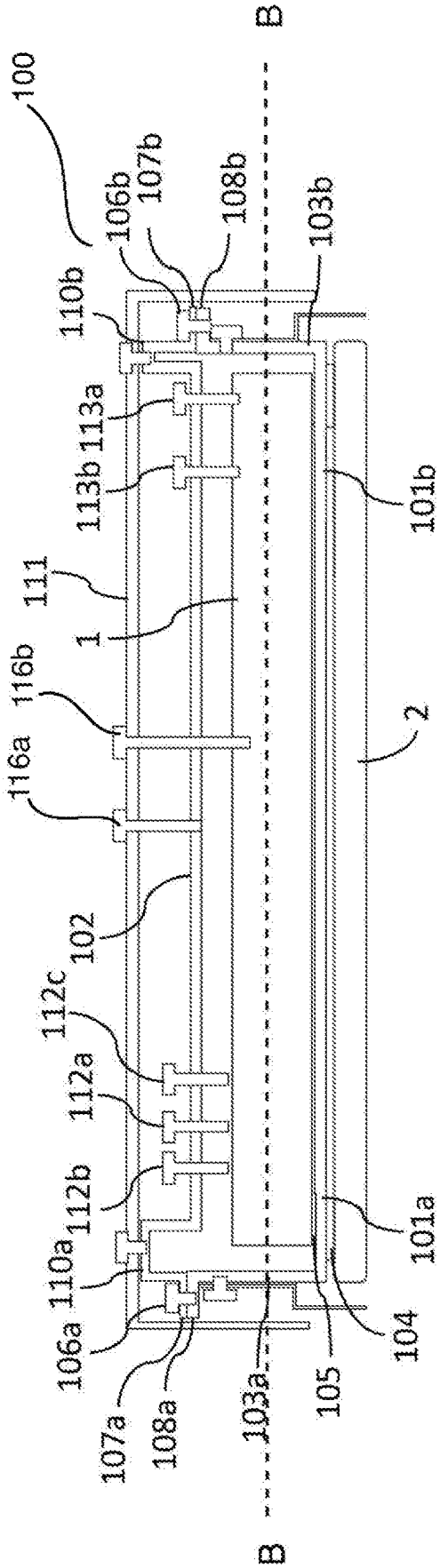
100
B
106b
107b
108b
103b
110b
113a
113b
101b
111
1
116b
116a
2
102
112c
112a
112b
110a
101a
106a
107a
108a
103a
105
104
B

Figure 3a

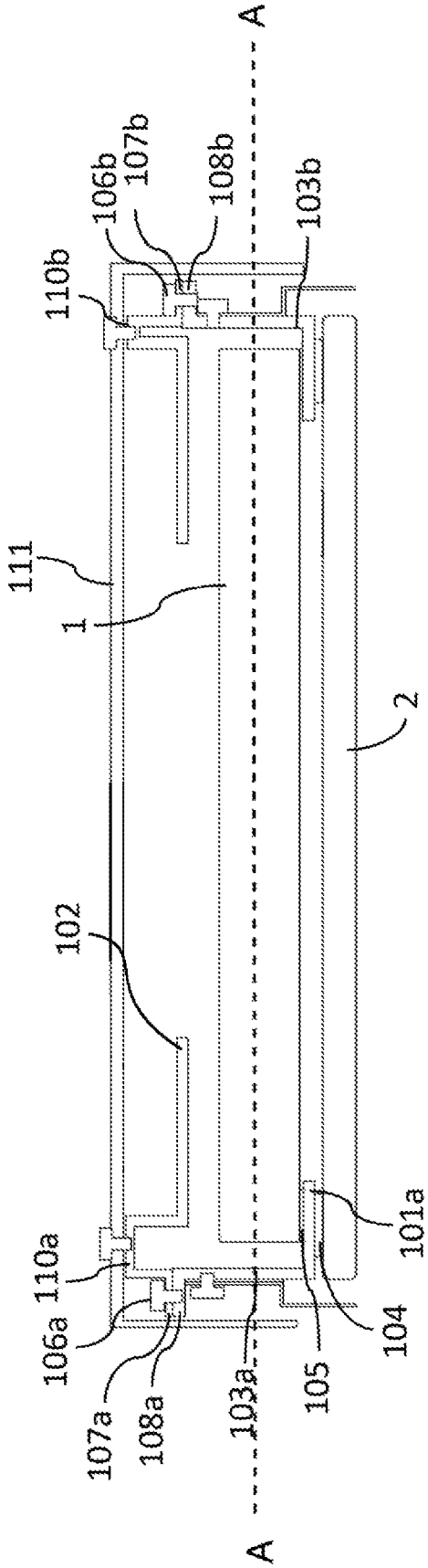
A
106b
107b
108b
103b
110b
111
1
2
102
101a
110a
106a
107a
108a
103a
105
104
A

Figure 3b

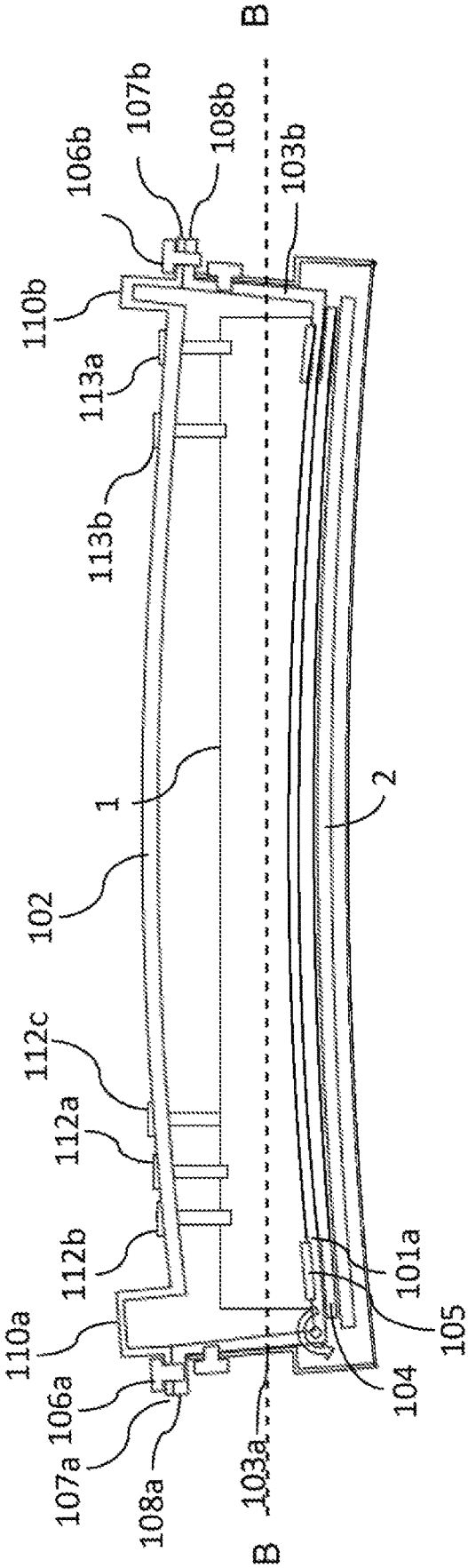
B
107b
108b
106b
103b
110b
113a
113b
1
2
102
112c
112a
112b
101a
110a
105
106a
104
107a
103a
108a
B

Figure 3c

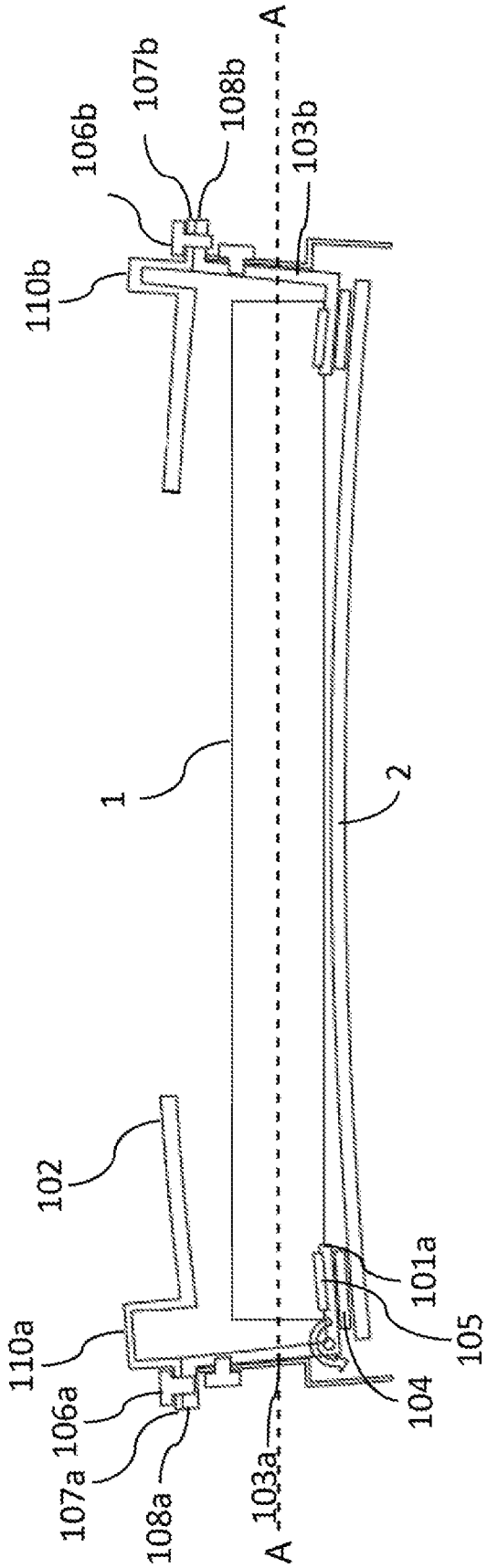
110b
106b
107b
108b
A
103b
1
2
102
110a
106a
107a
108a
A
103a
104
105
101a

Figure 3d

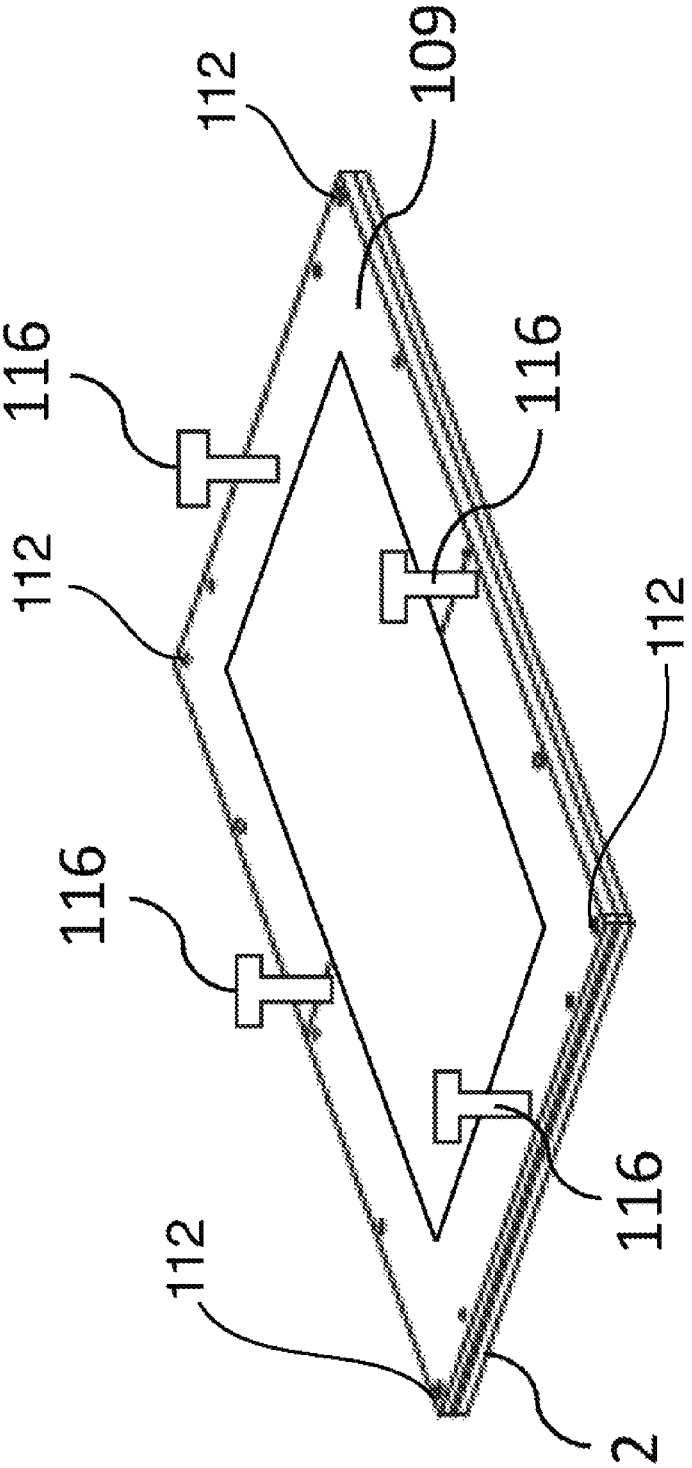

Figure 4a

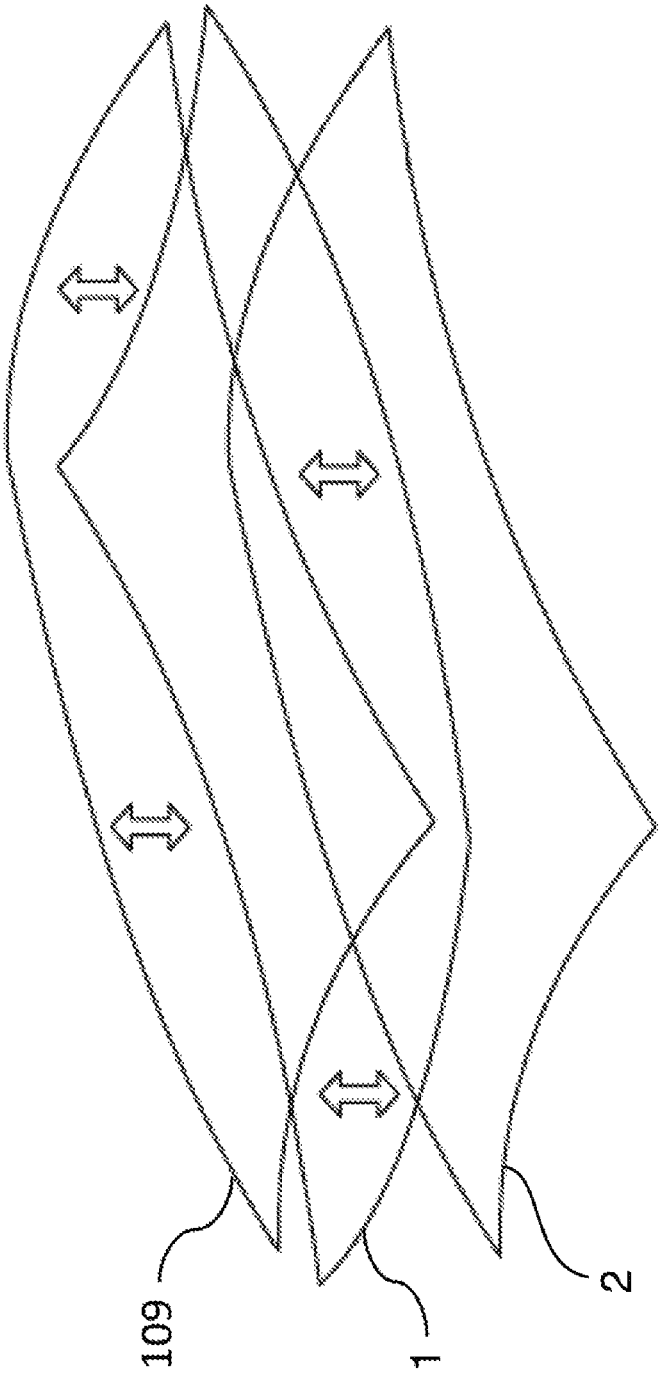

Figure 4b

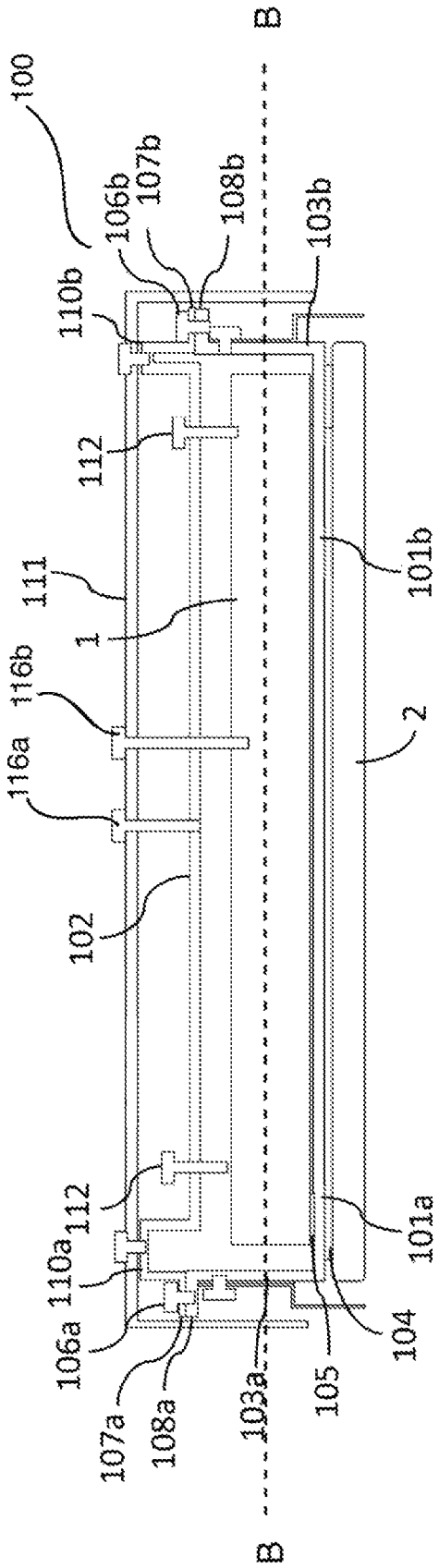
100
B
106b
107b
108b
103b
110b
112
111
1
116b
116a
102
112
110a
106a
107a
108a
103a
105
104
101a
101b
2
B

Figure 4c

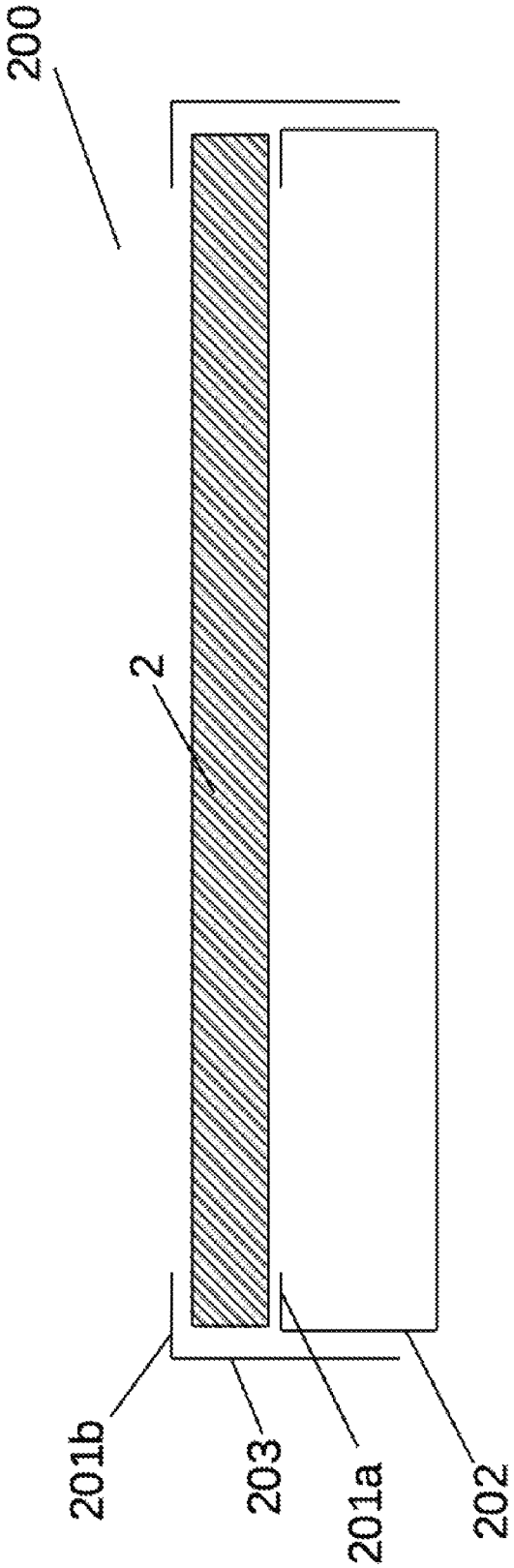

Figure 5a

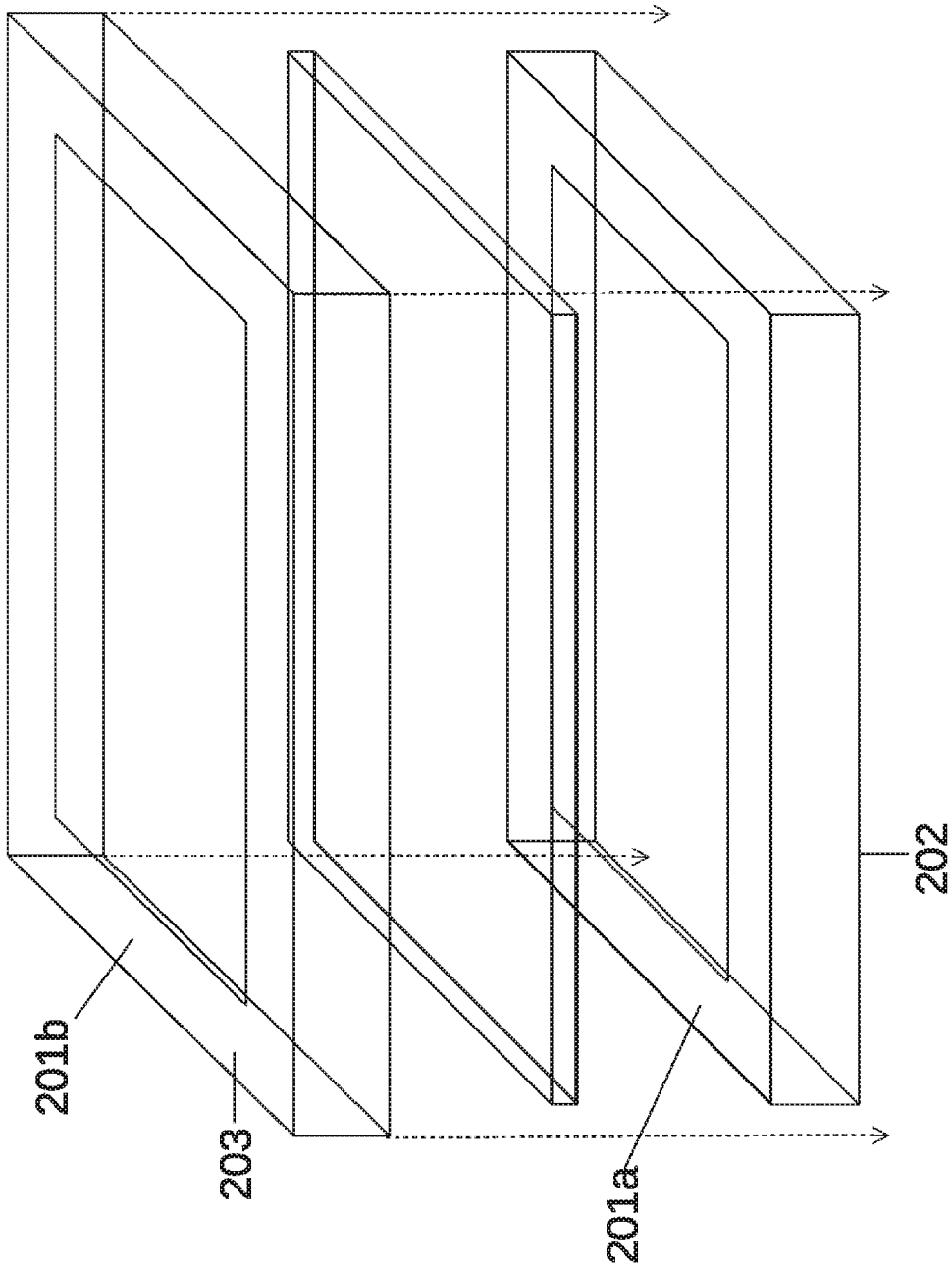

Figure 5b

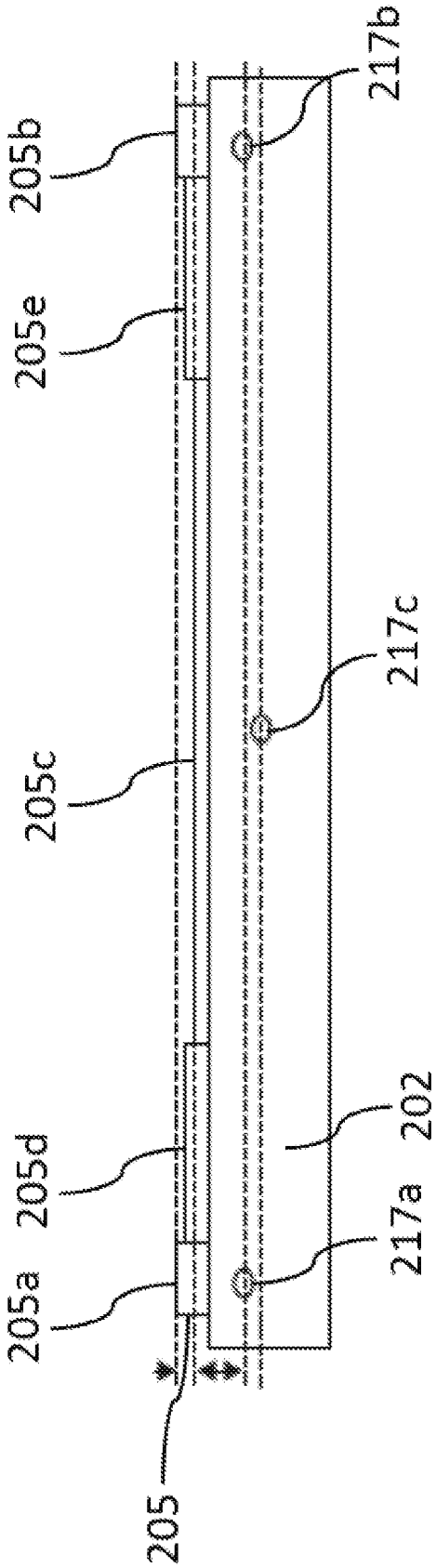

Figure 5c

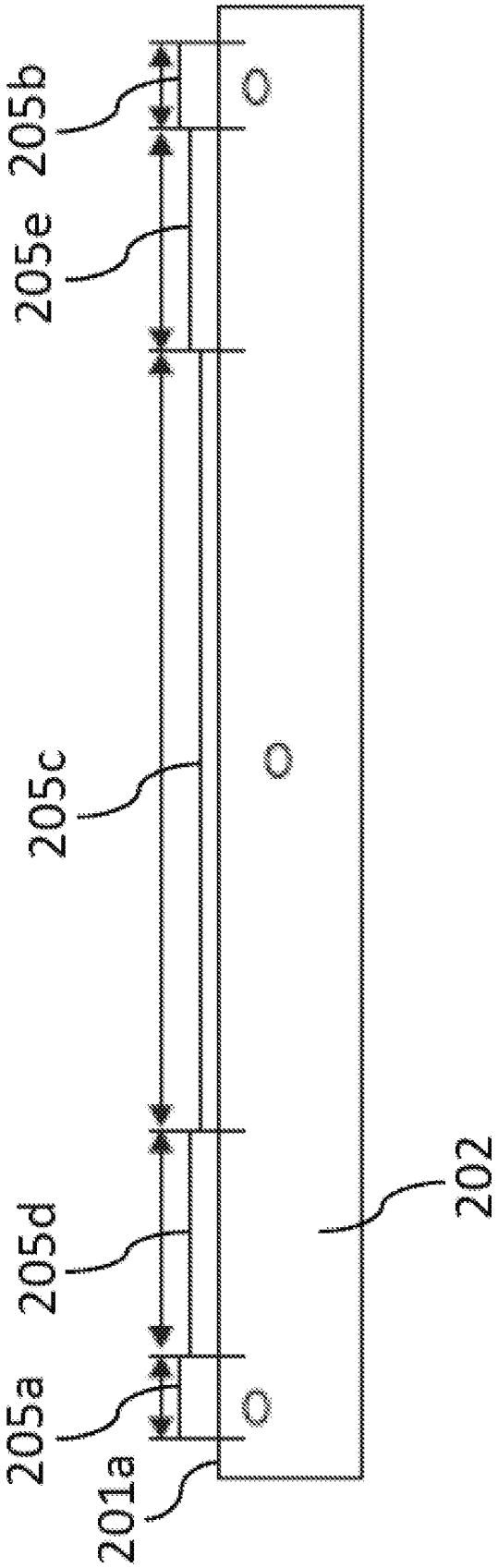

Figure 5d

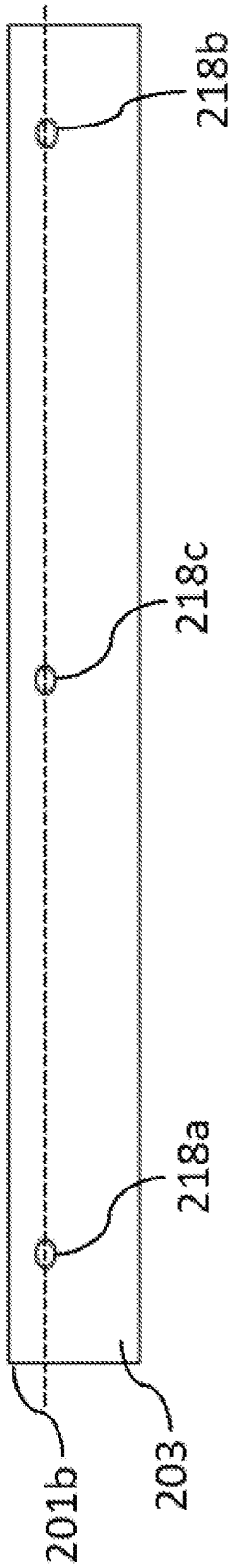

Figure 5e

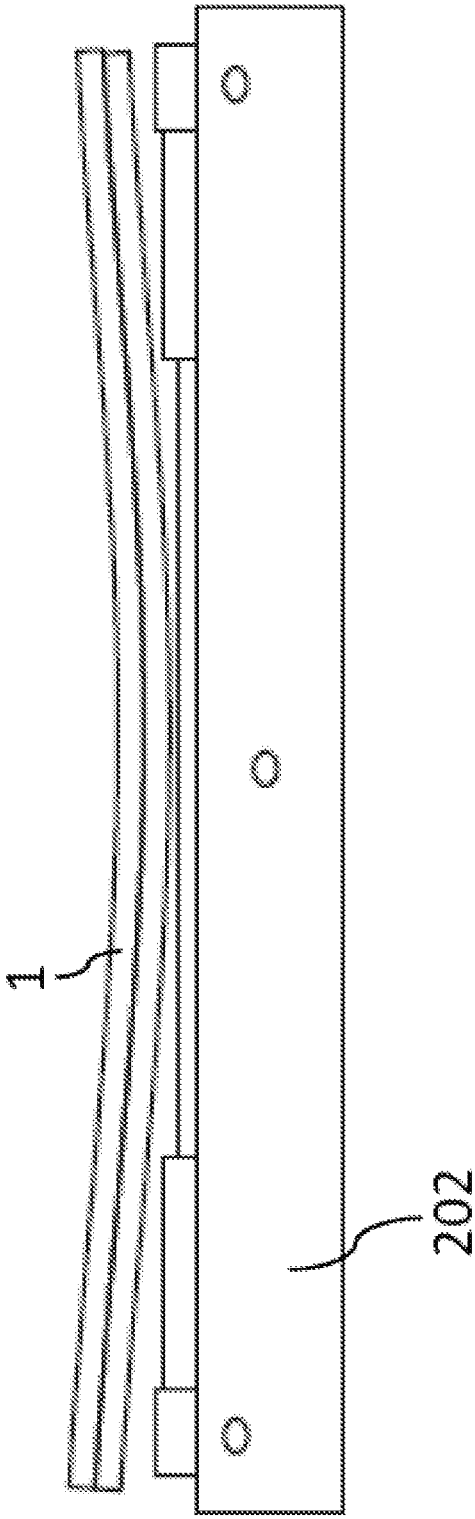

Figure 5f

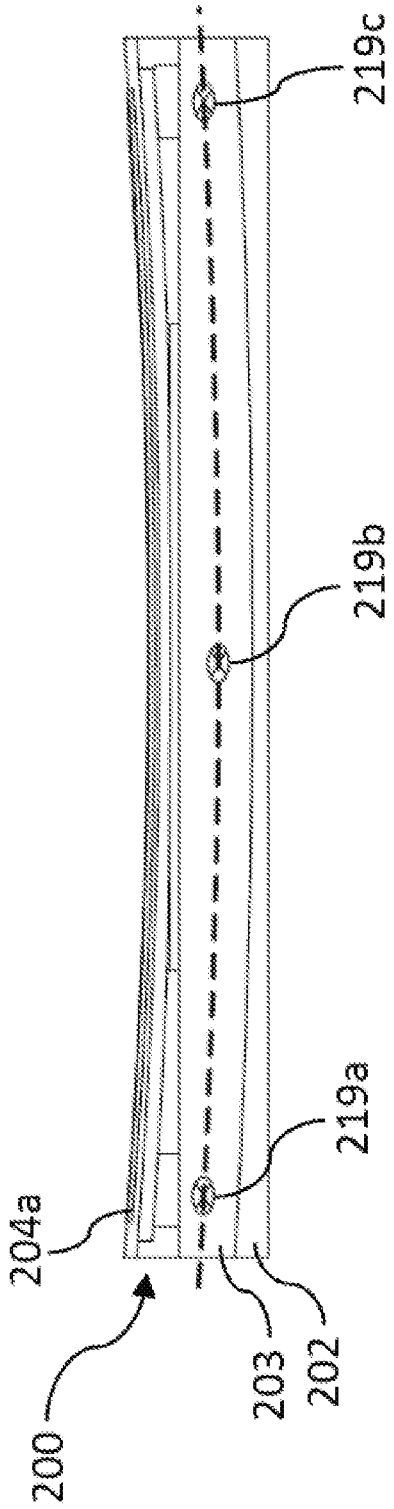

Figure 5g

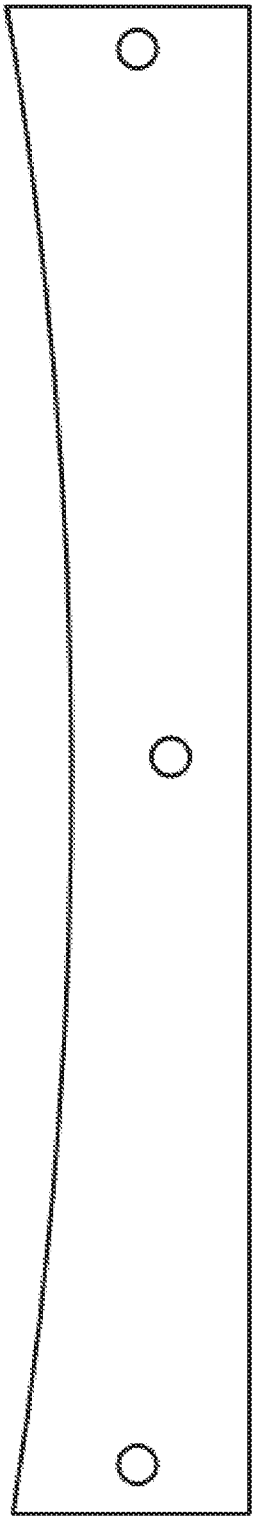

Figure 5h

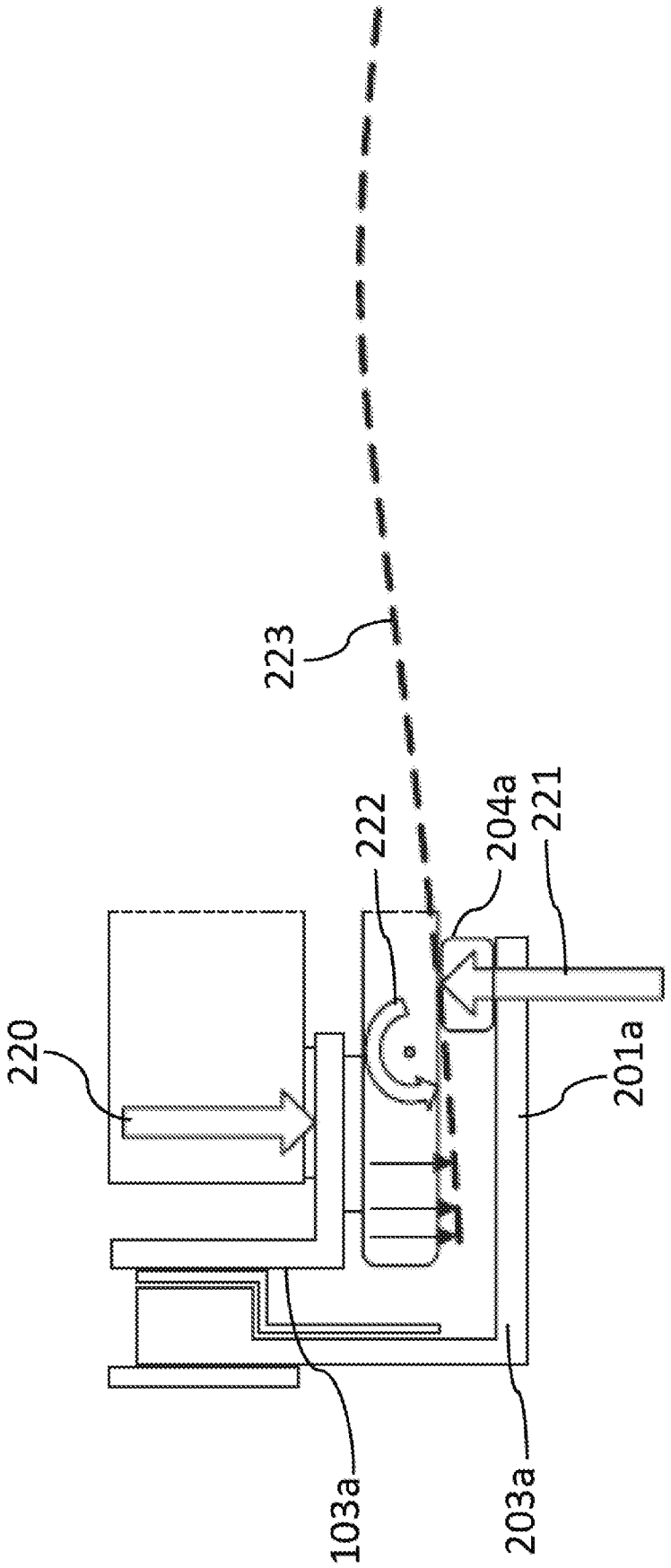

Figure 6

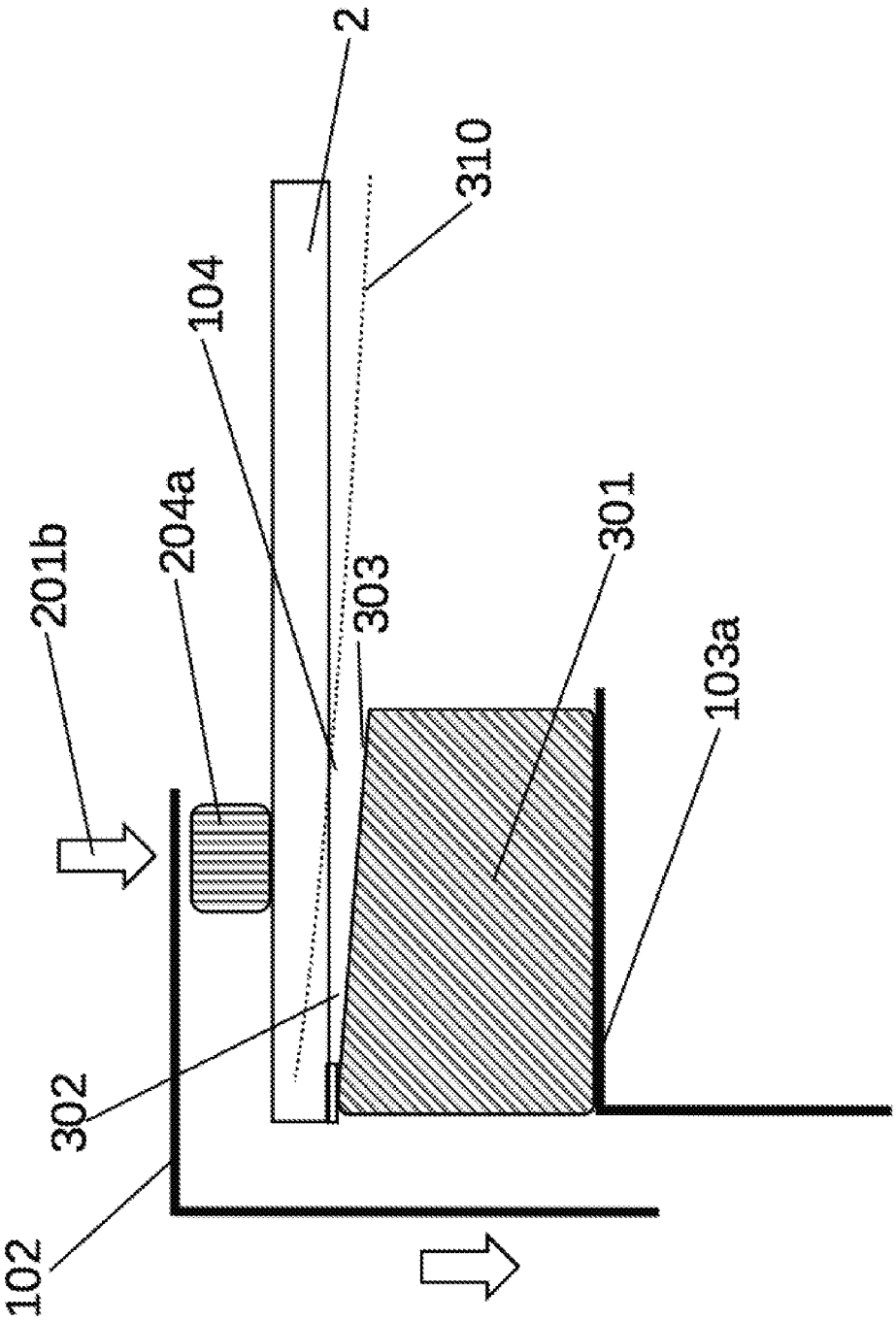

Figure 7

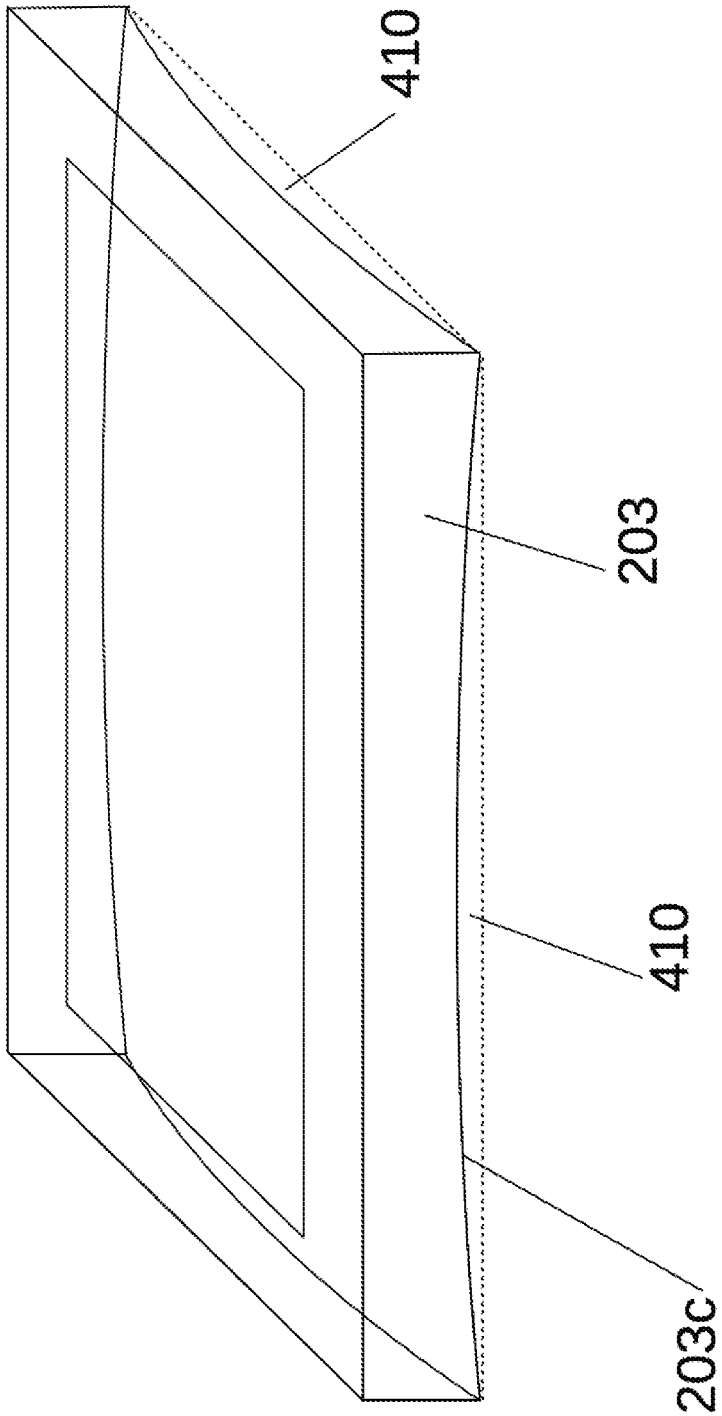

Figure 8

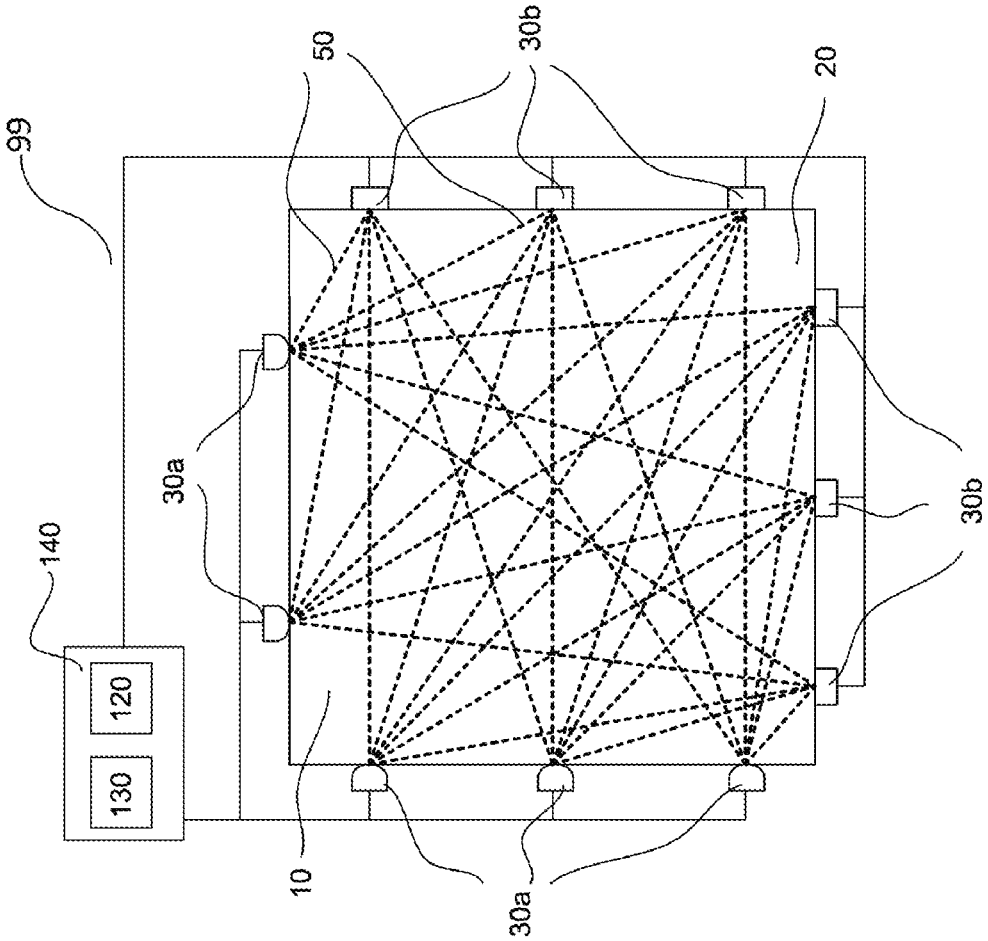

Figure 9

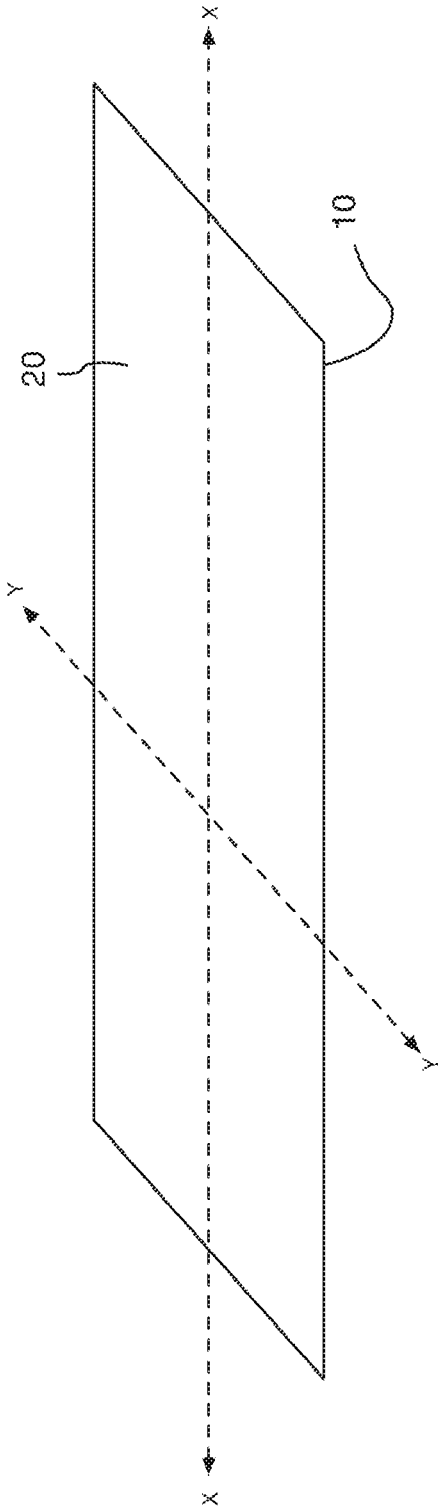

Figure 10a

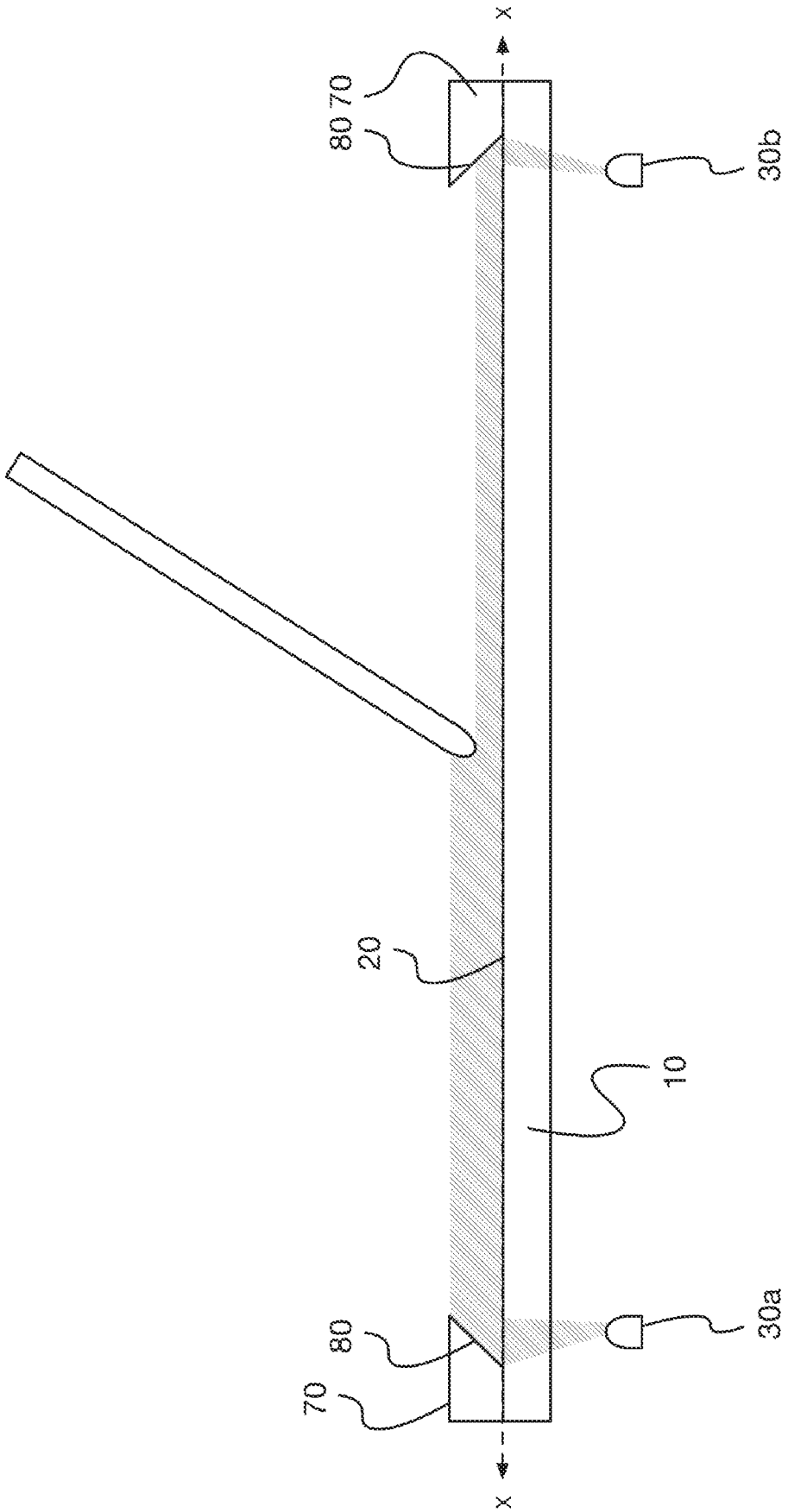

Figure 10b

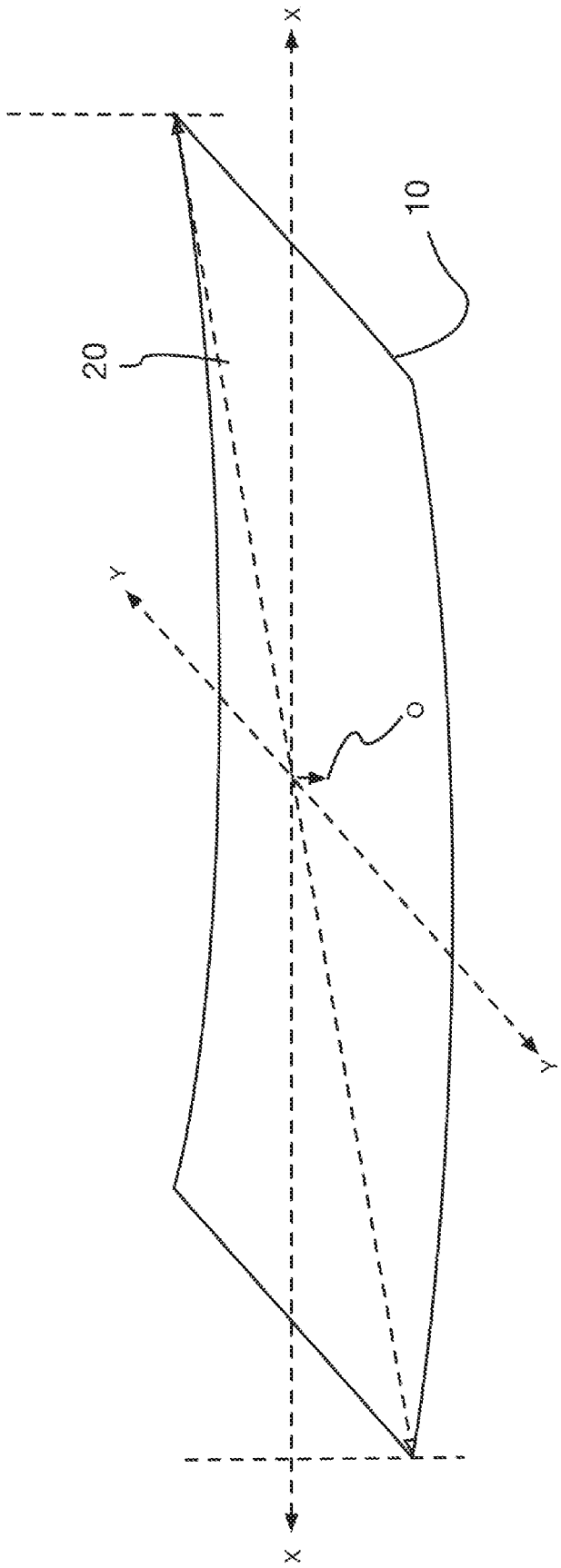

Figure 11a

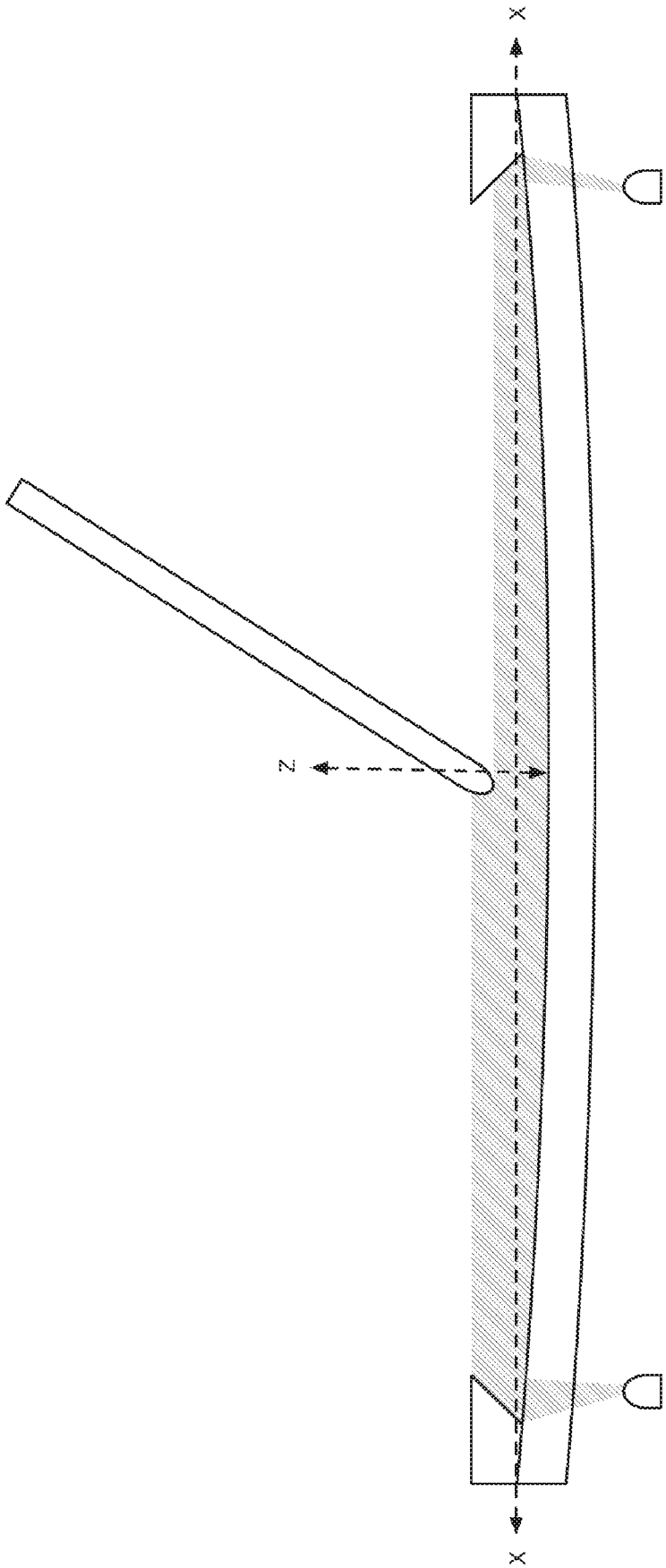

Figure 11b

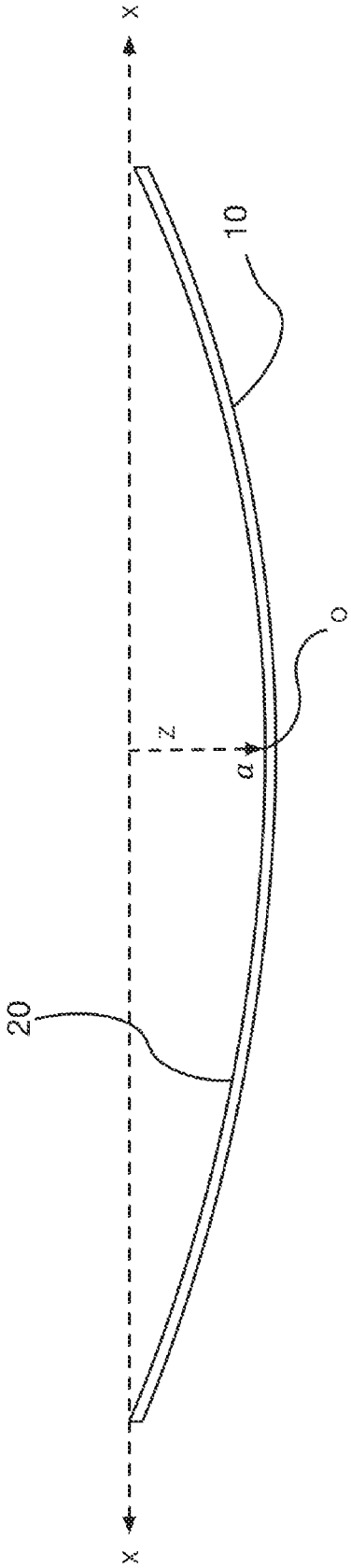

Figure 11c

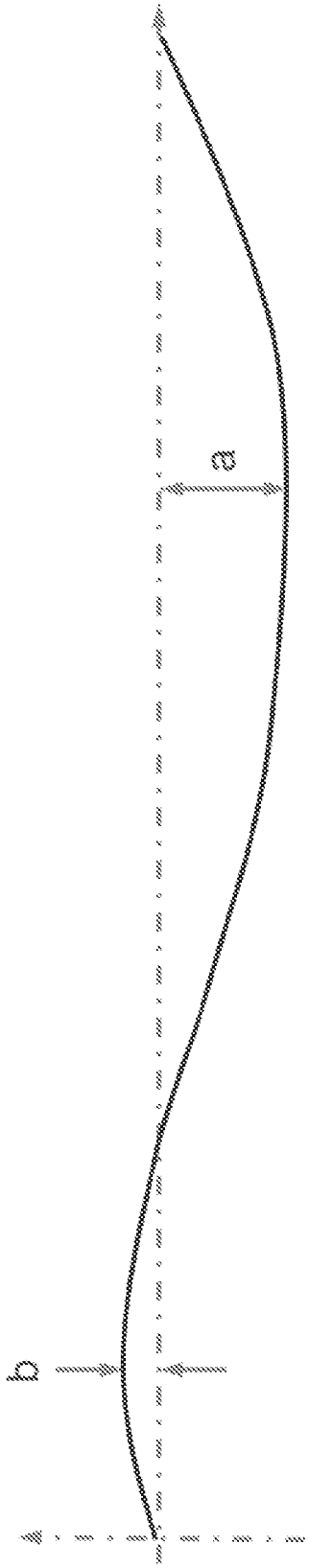

Figure 11d

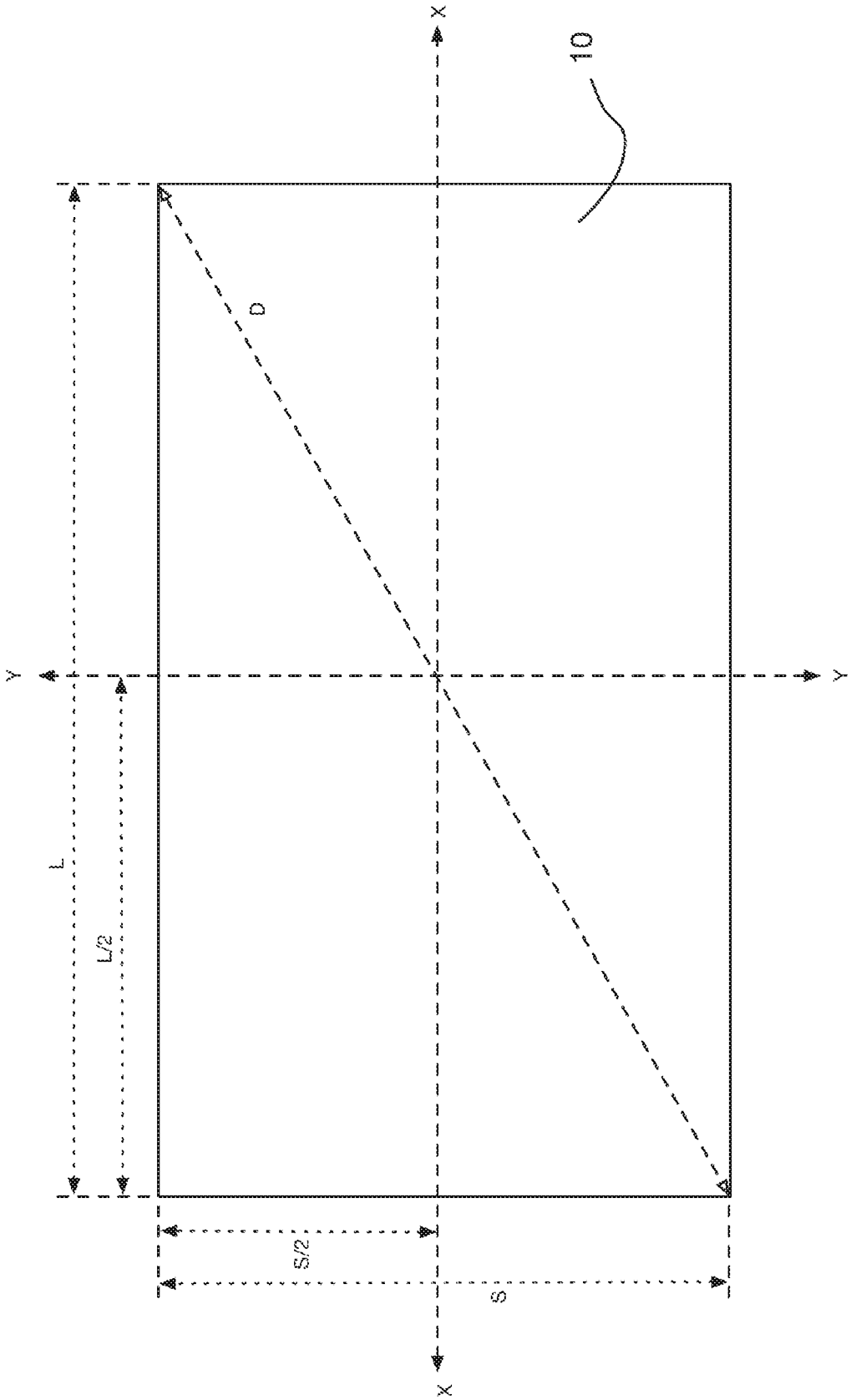

Figure 12a

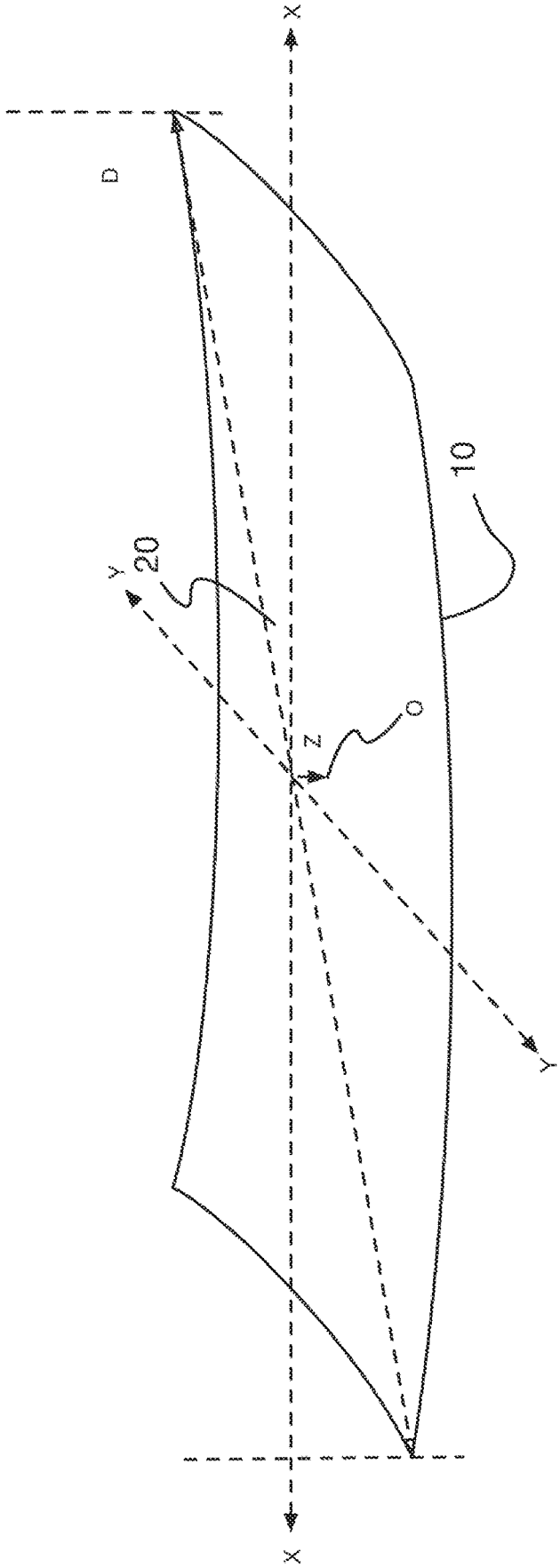

Figure 12b

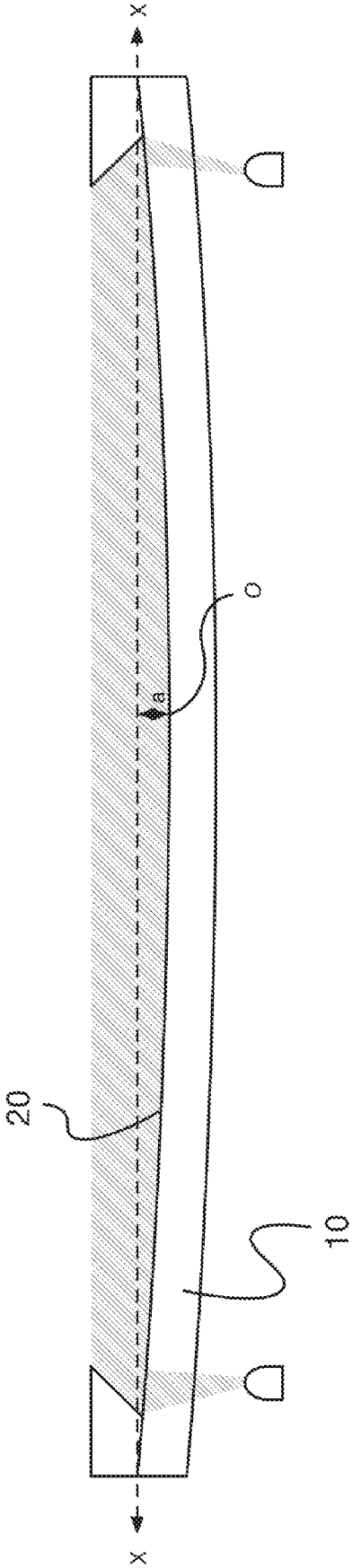

Figure 12c

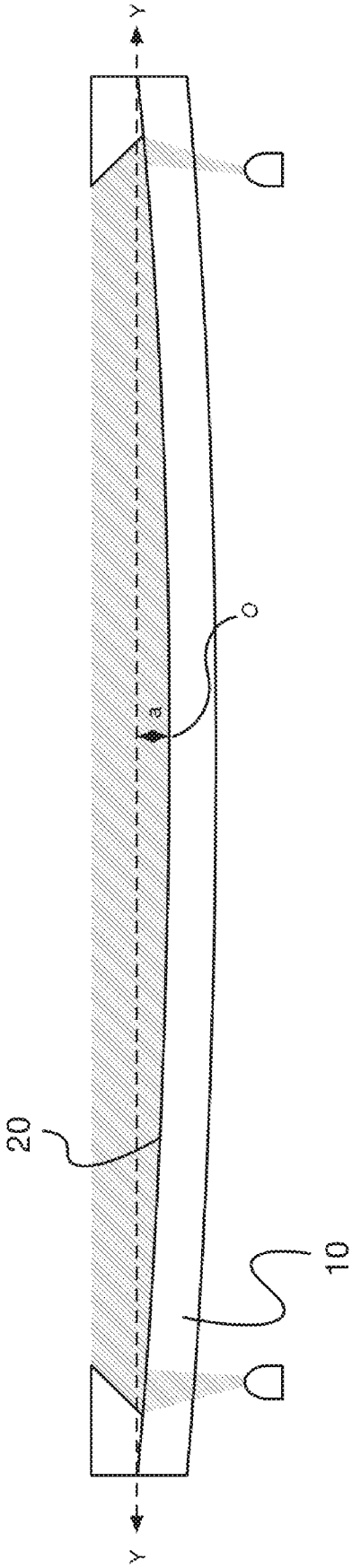

Figure 12d

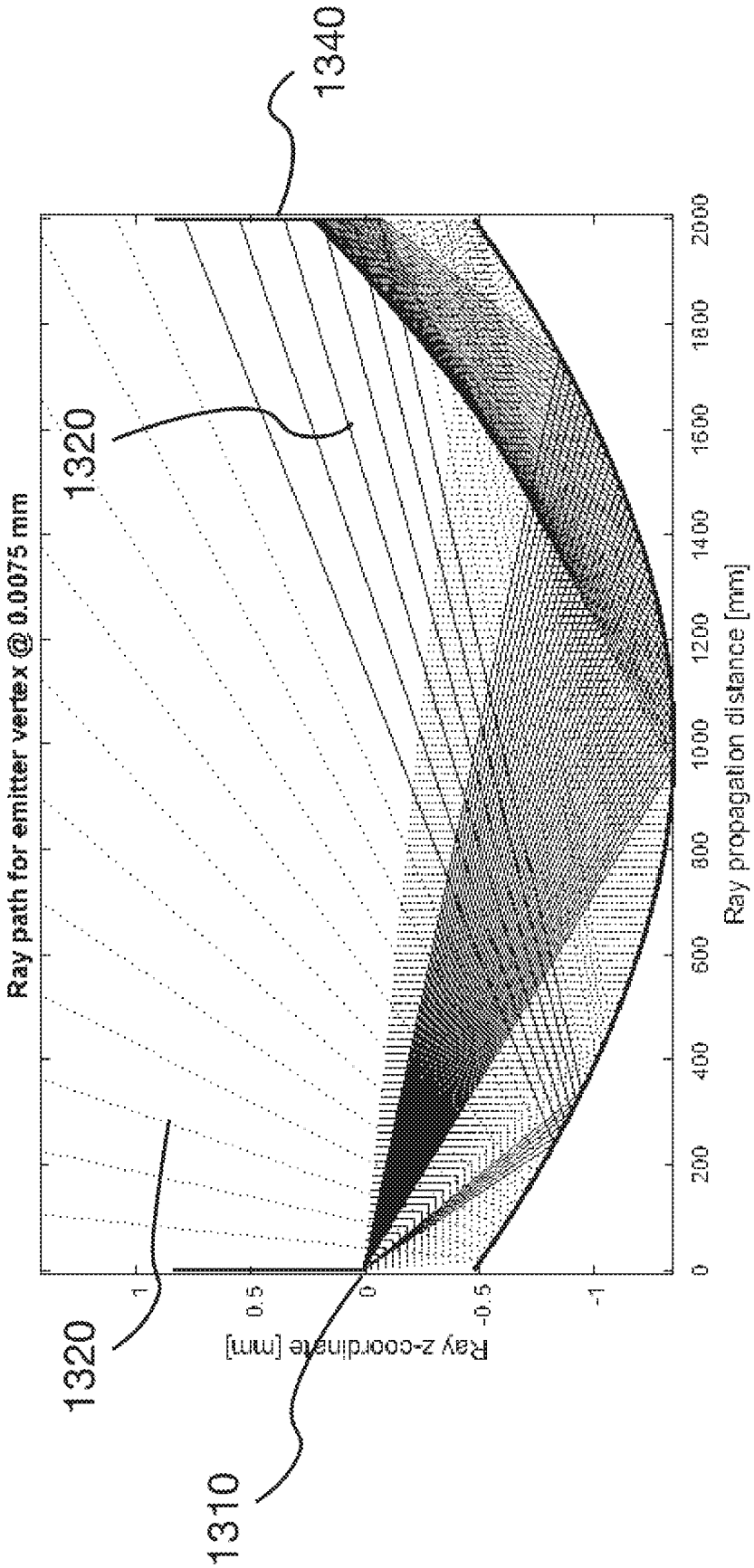
Ray path for emitter vertex @ 0.0075 mm
Ray z-coordinate [mm]
Ray propagation distance [mm]
1
0.5
0
-0.5
-1
0
200
400
600
800
1000
1200
1400
1600
1800
2000
1310
1320
1320
1340

Figure 13a

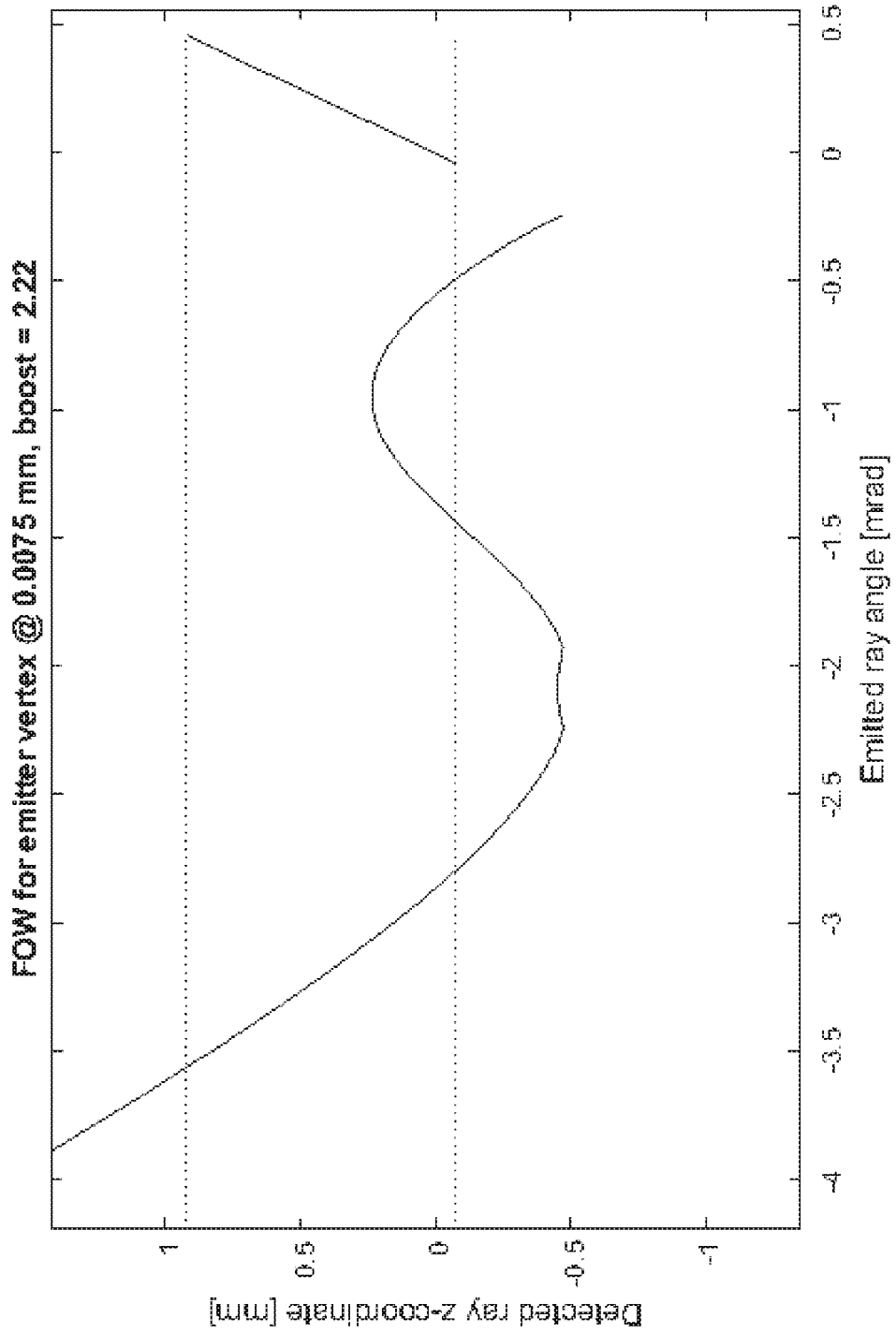
FOW for emitter vertex @ 0.0075 mm, boost = 2.22
Detected ray z-coordinate [mm]
1
0.5
0
-0.5
-1
-4
-3.5
-3
-2.5
-2
-1.5
-1
-0.5
0
0.5
Emitted ray angle [mrad]

Figure 13b

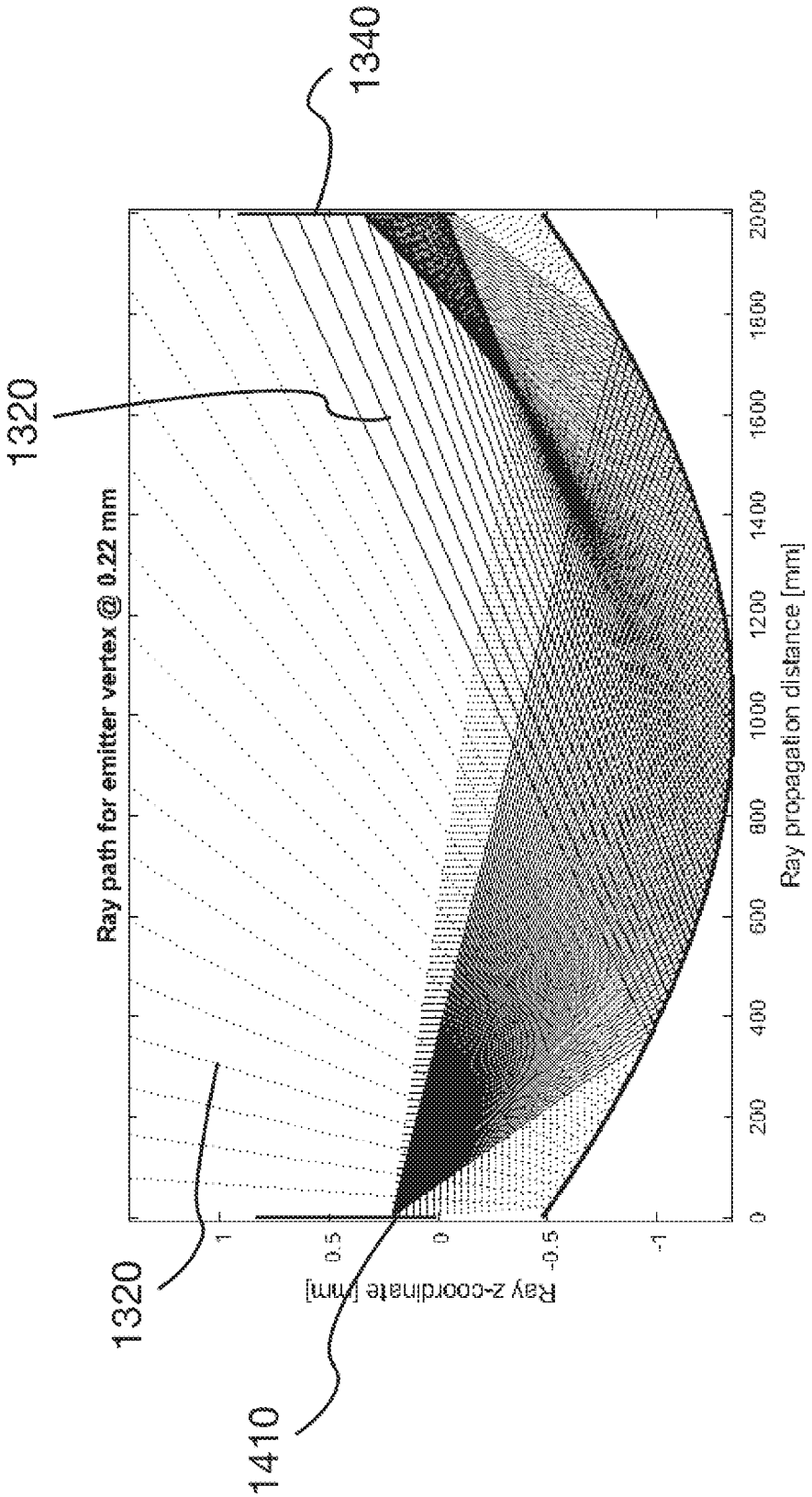
1340
1320
Ray path for emitter vertex @ 0.22 mm
1320
1410
Ray z-coordinate [mm]
1
0.5
0
-0.5
-1
0
200
400
600
800
1000
1200
1400
1600
1800
2000
Ray propagation distance [mm]

Figure 14a

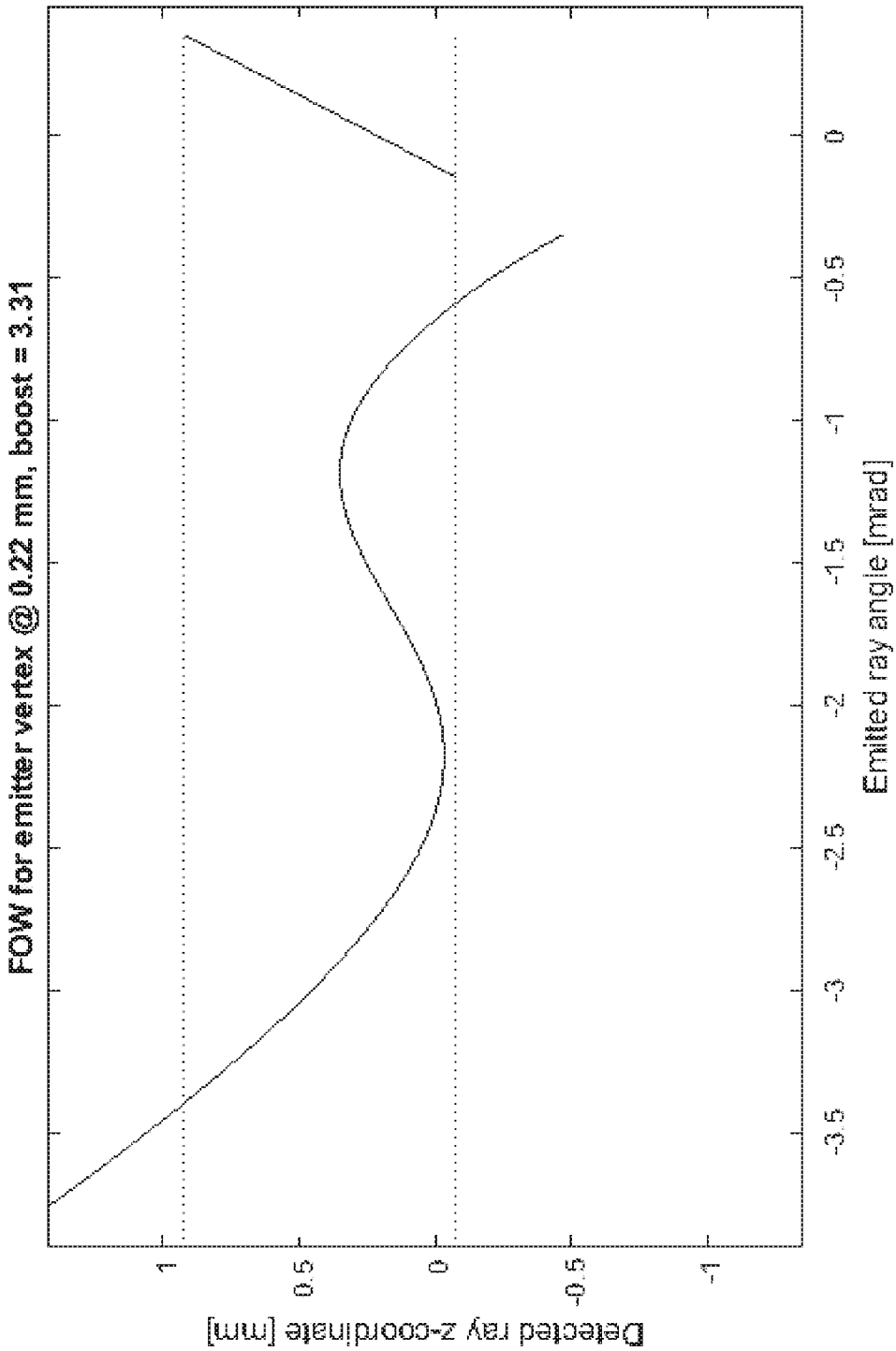
FOW for emitter vertex @ 0.22 mm, boost = 3.31
Detected ray z-coordinate [mm]
1
0.5
0
-0.5
-1
-3.5
-3
-2.5
-2
-1.5
-1
-0.5
0
Emitted ray angle [mrad]

Figure 14b

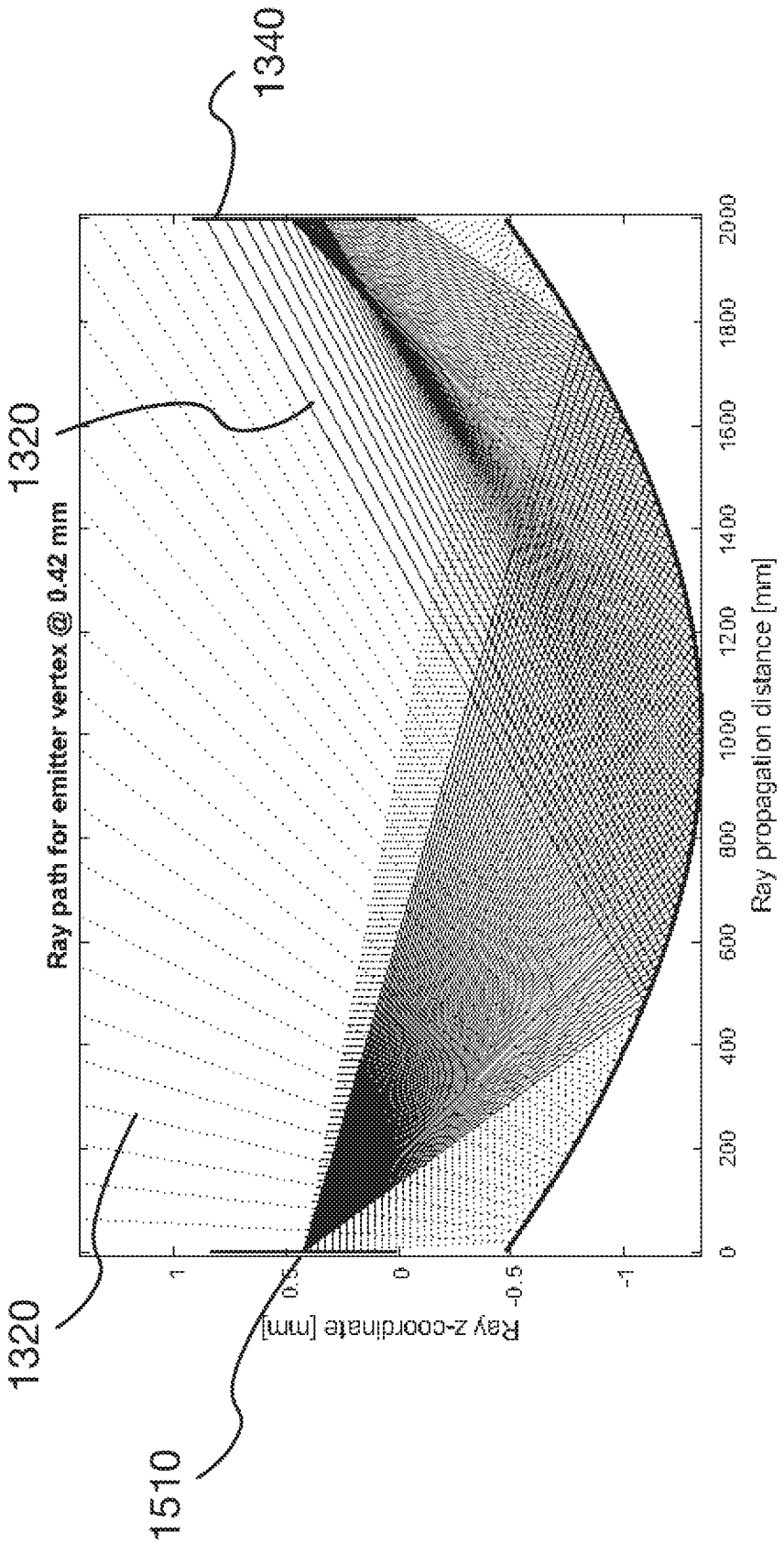
1340
1320
1320
1510
Ray path for emitter vertex @ 0.42 mm
Ray z-coordinate [mm]
Ray propagation distance [mm]
1
0.5
0
-0.5
-1
0
200
400
600
800
1000
1200
1400
1600
1800
2000

Figure 15a

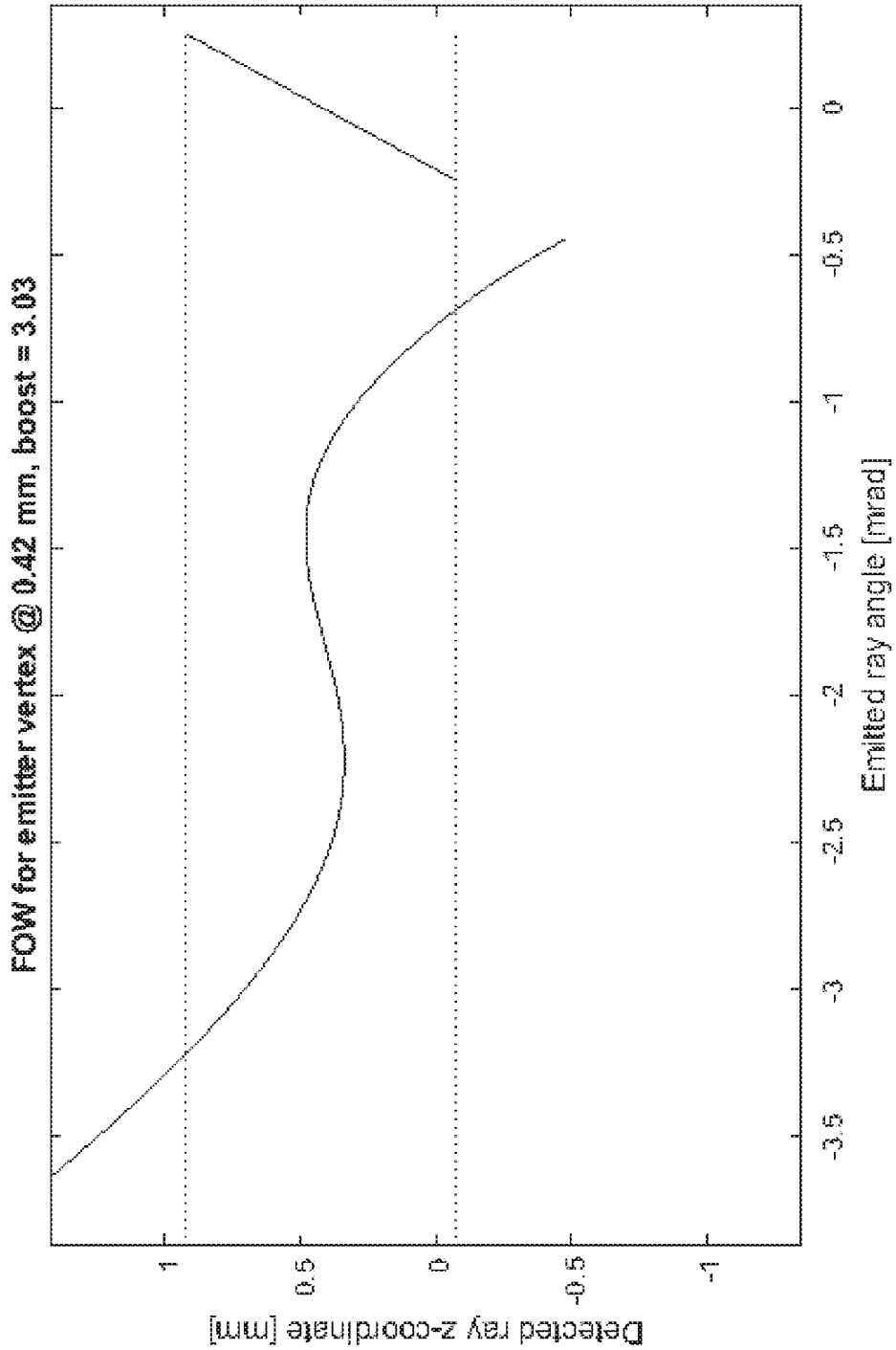
FOW for emitter vertex @ 0.42 mm, boost = 3.03
Detected ray z-coordinate [mm]
1
0.5
0
-0.5
-1
-3.5
-3
-2.5
-2
-1.5
-1
-0.5
0
Emitted ray angle [mrad]

Figure 15b

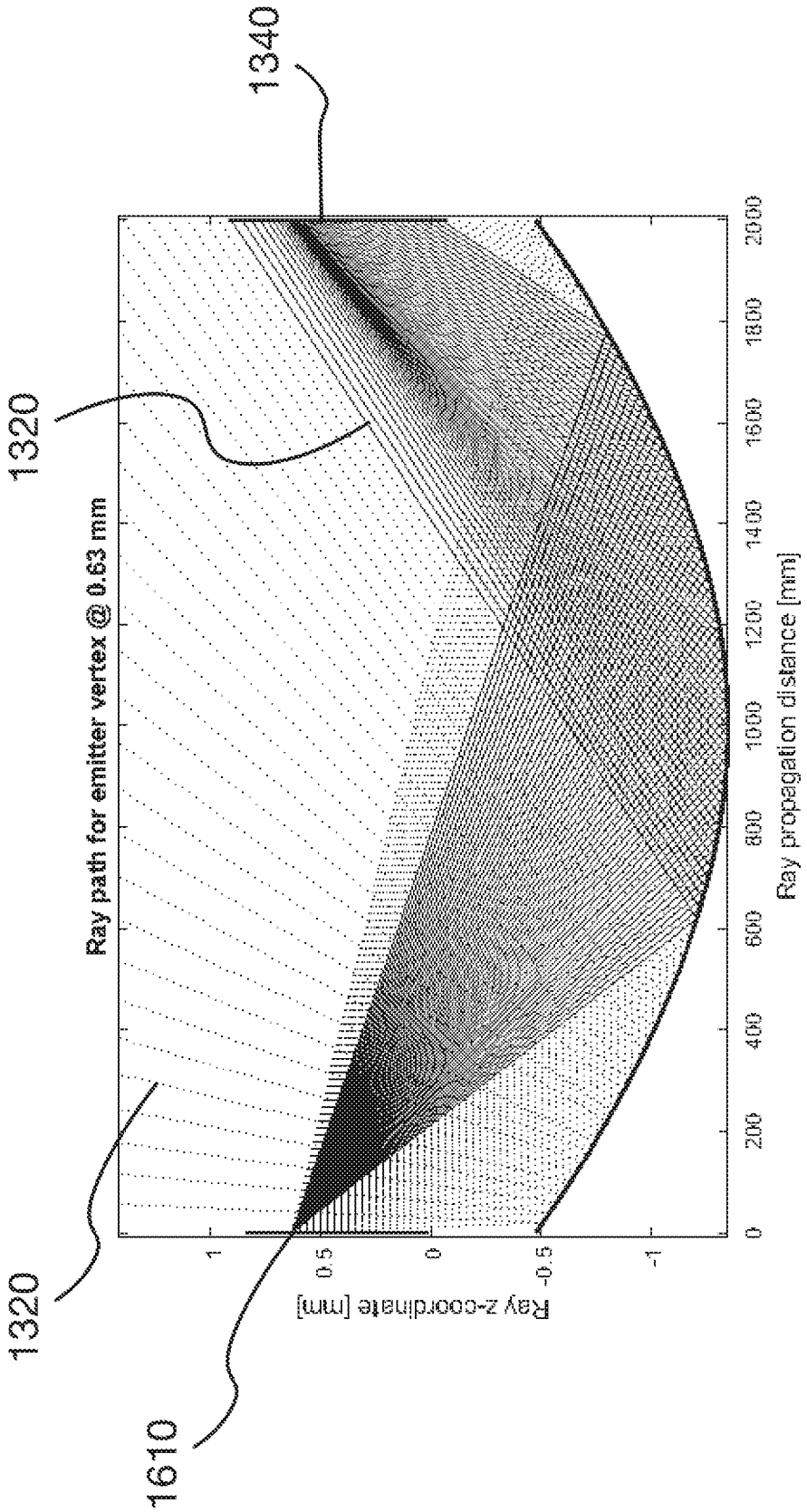
1340
1320
1320
1610
Ray path for emitter vertex @ 0.63 mm
Ray z-coordinate [mm]
Ray propagation distance [mm]
1
0.5
0
-0.5
-1
0
200
400
600
800
1000
1200
1400
1600
1800
2000

Figure 16a

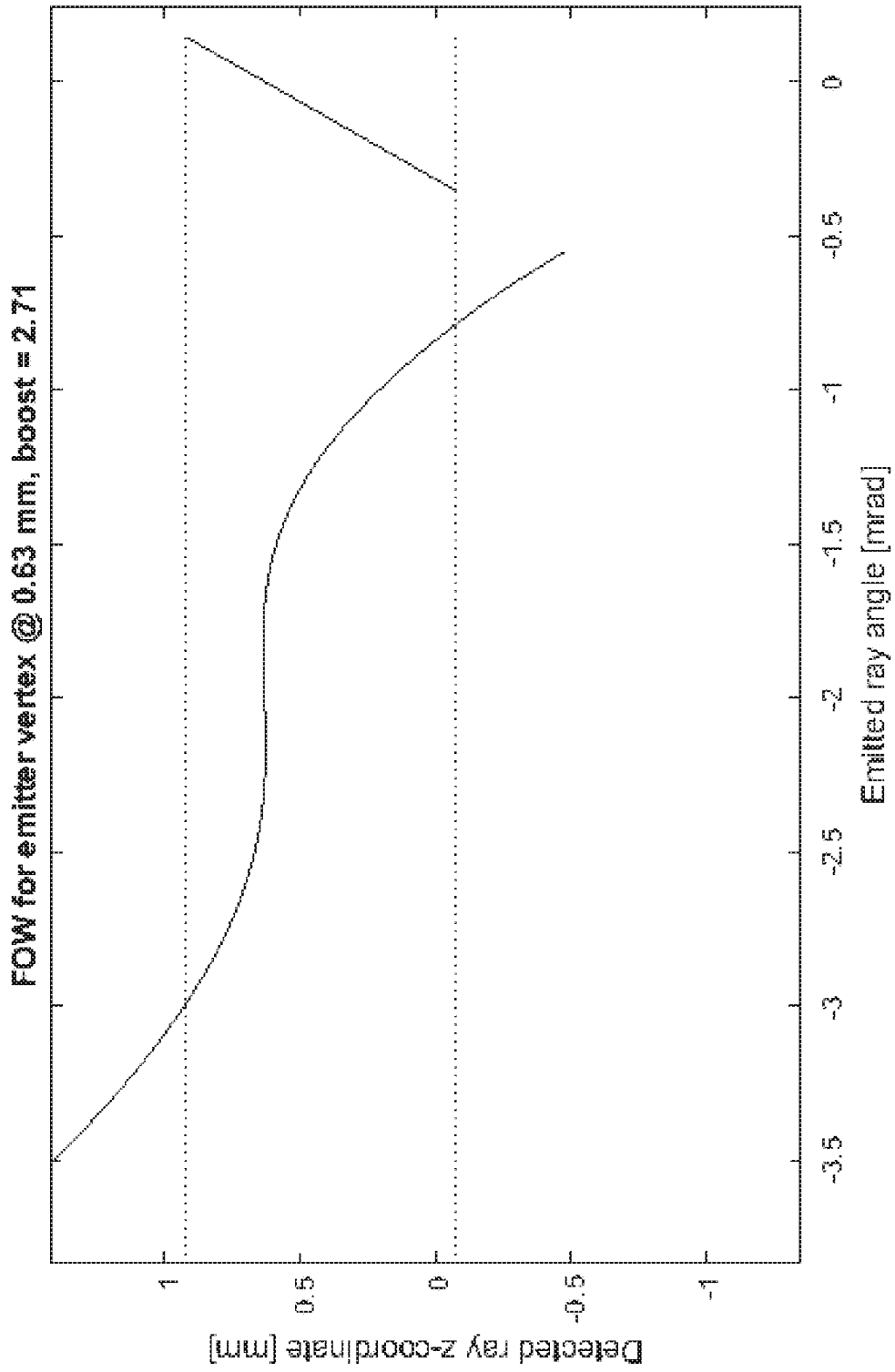
FOW for emitter vertex @ 0.63 mm, boost = 2.71
Detected ray z-coordinate [mm]
1
0.5
0
-0.5
-1
-3.5
-3
-2.5
-2
-1.5
-1
-0.5
0
Emitted ray angle [mrad]

Figure 16b

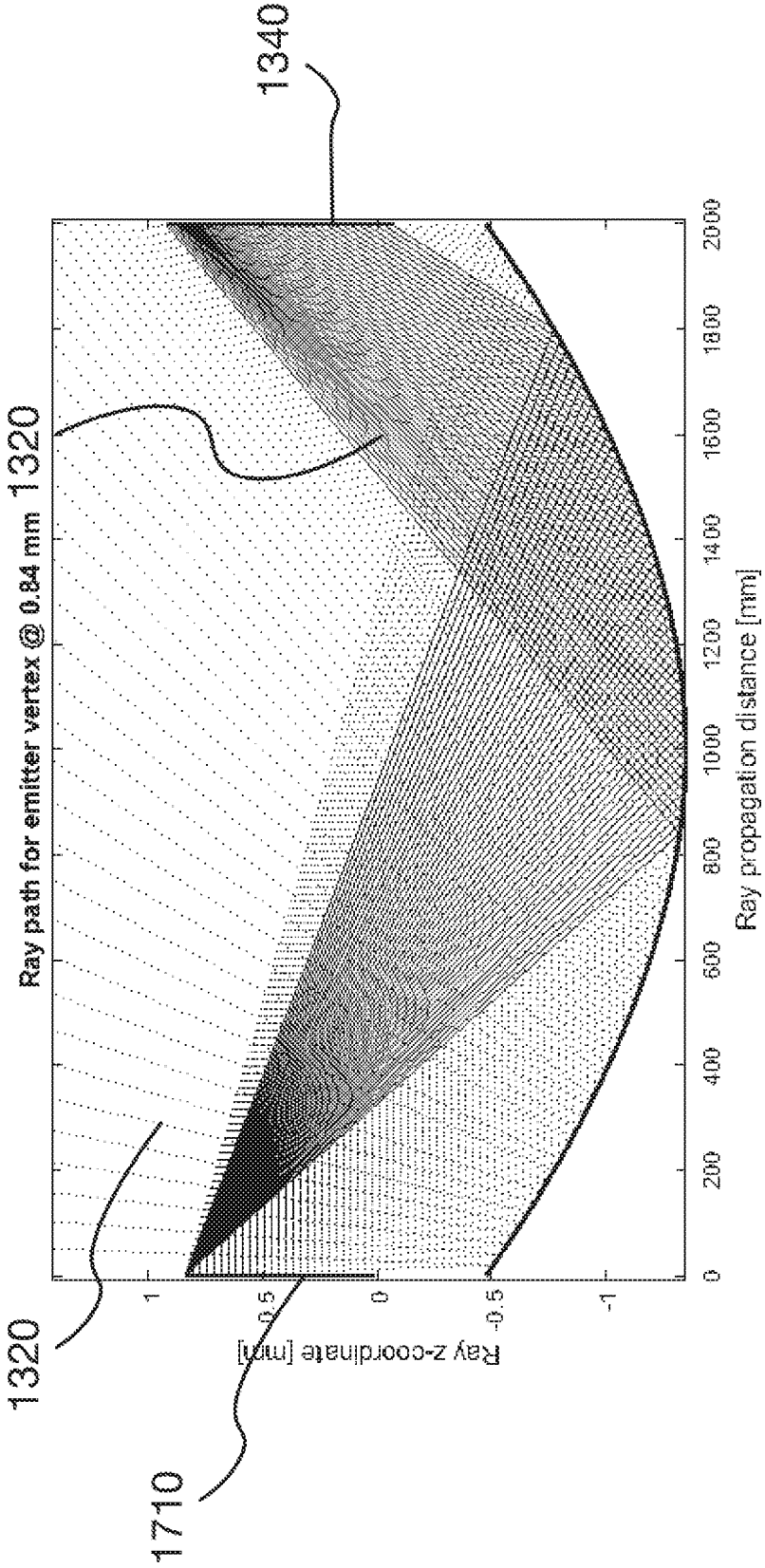
1340
1320
1320
1710
Ray path for emitter vertex @ 0.84 mm
Ray z-coordinate [mm]
Ray propagation distance [mm]
1
0.5
0
-0.5
-1
0
200
400
600
800
1000
1200
1400
1600
1800
2000

Figure 17a

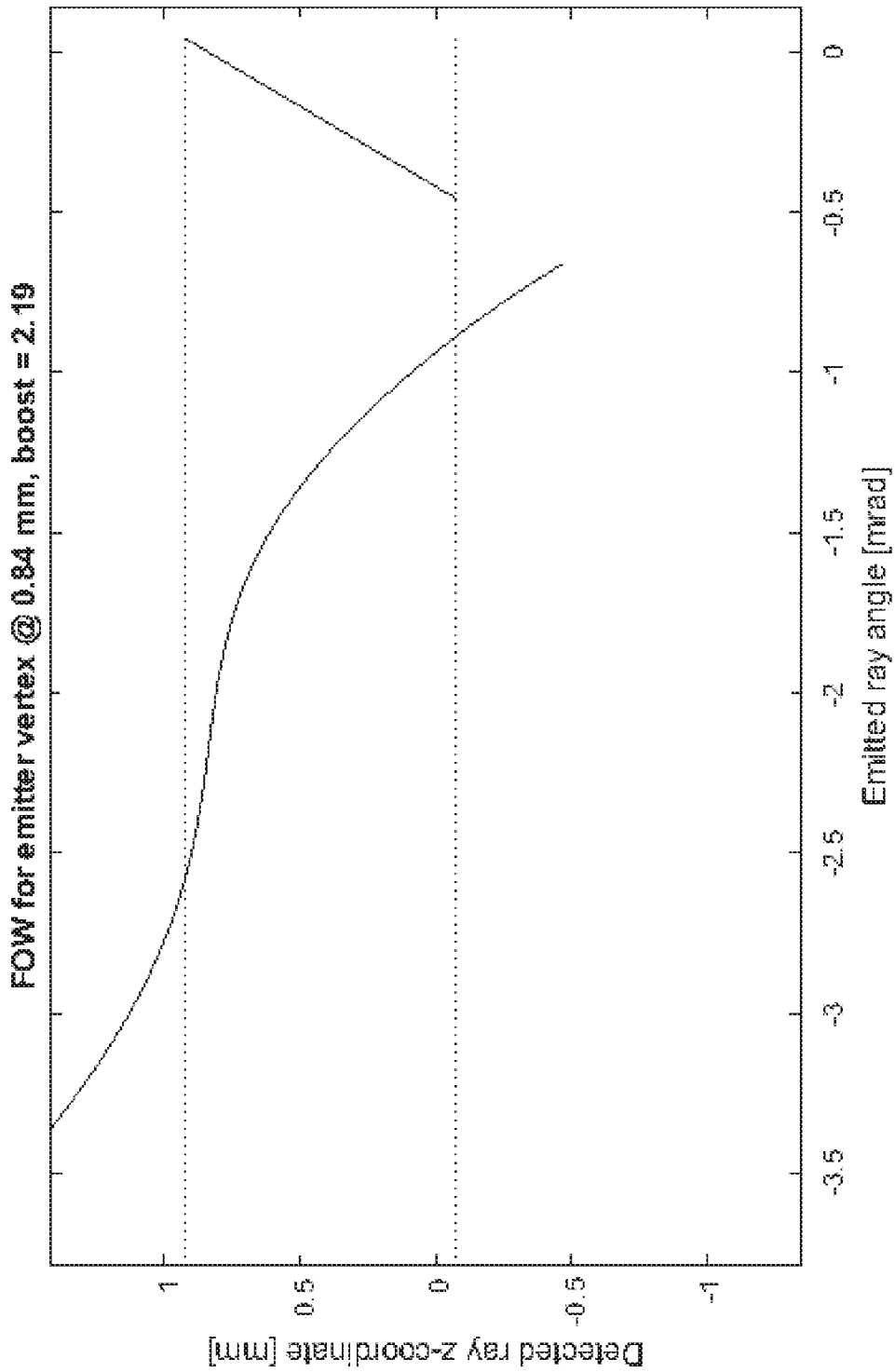
FOW for emitter vertex @ 0.84 mm, boost = 2.19
Detected ray z-coordinate [mm]
1
0.5
0
-0.5
-1
-3.5
-3
-2.5
-2
-1.5
-1
-0.5
0
Emitted ray angle [mrad]

Figure 17b

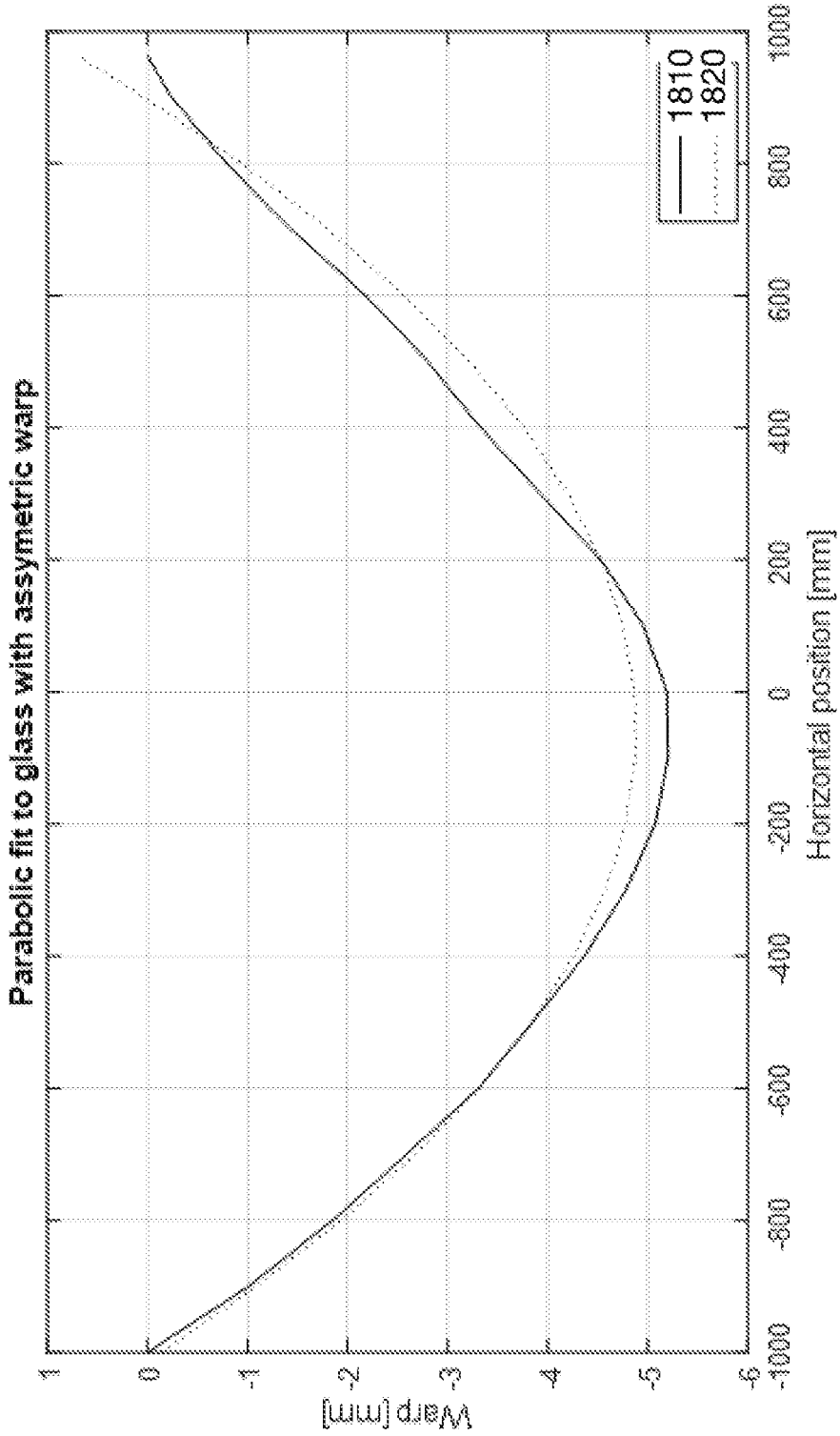
Parabolic fit to glass with assymetric warp
Warp [mm]
1
0
-1
-2
-3
-4
-5
-6
-1000
-800
-600
-400
-200
0
200
400
600
800
1000
Horizontal position [mm]
1810
1820

Figure 18a

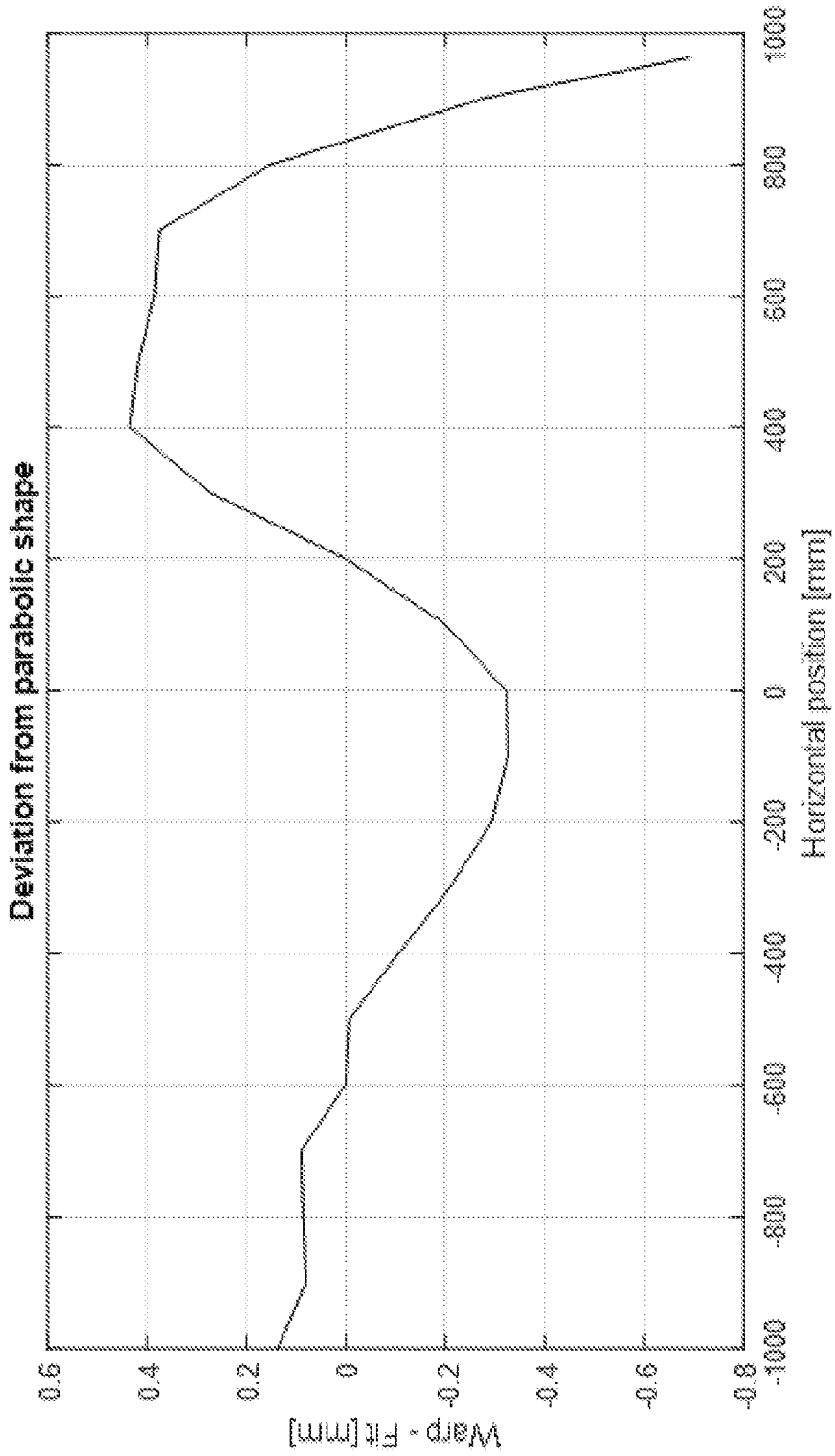
Deviation from parabolic shape
Warp - Fit [mm]
0.6
0.4
0.2
0
-0.2
-0.4
-0.6
-0.8
-1000
-800
-600
-400
-200
0
200
400
600
800
1000
Horizontal position [mm]

Figure 18b

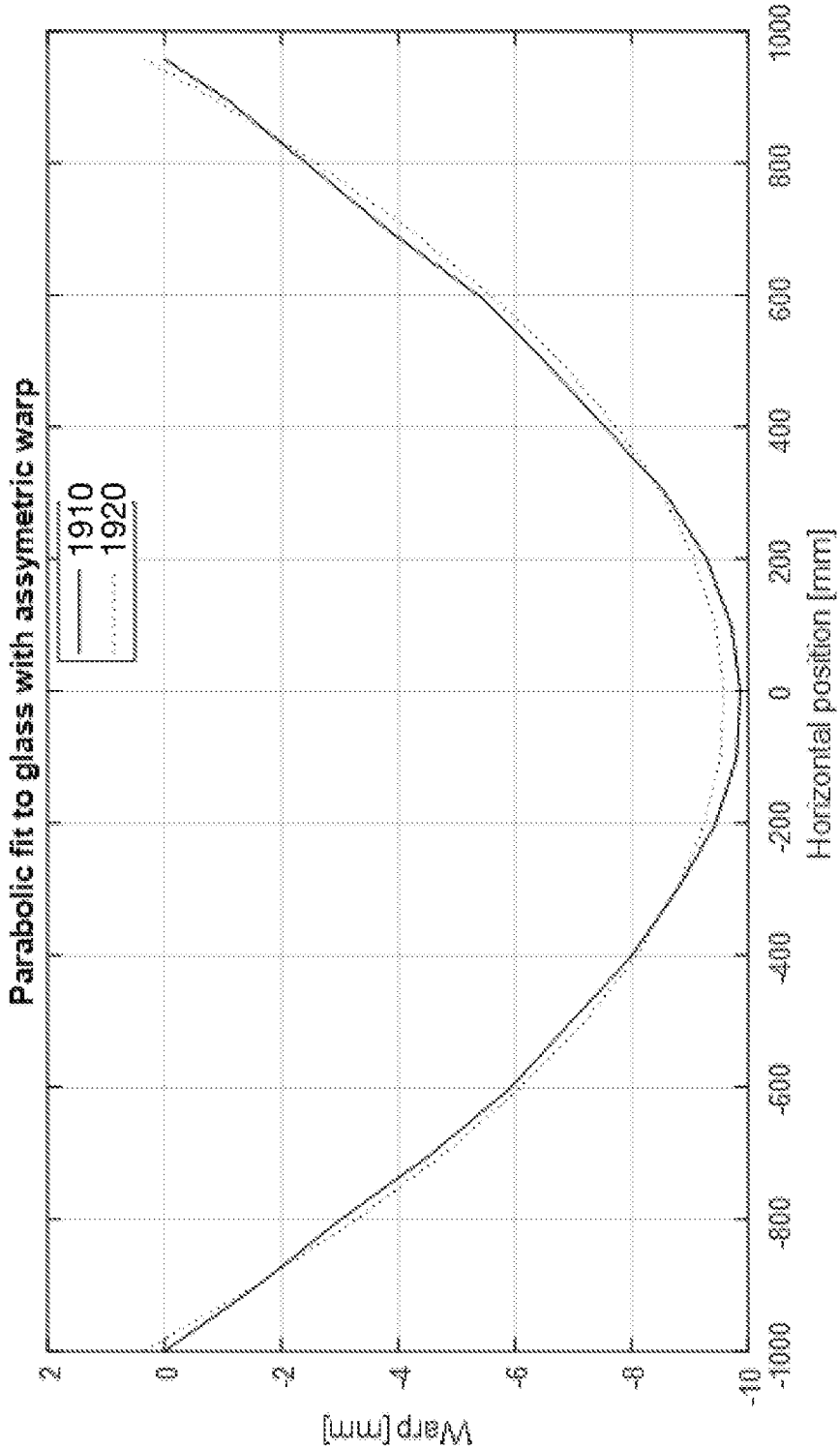
Parabolic fit to glass with assymetric warp
1910
1920
Warp [mm]
2
0
-2
-4
-6
-8
-10
-1000
-800
-600
-400
-200
0
200
400
600
800
1000
Horizontal position [mm]

Figure 19a

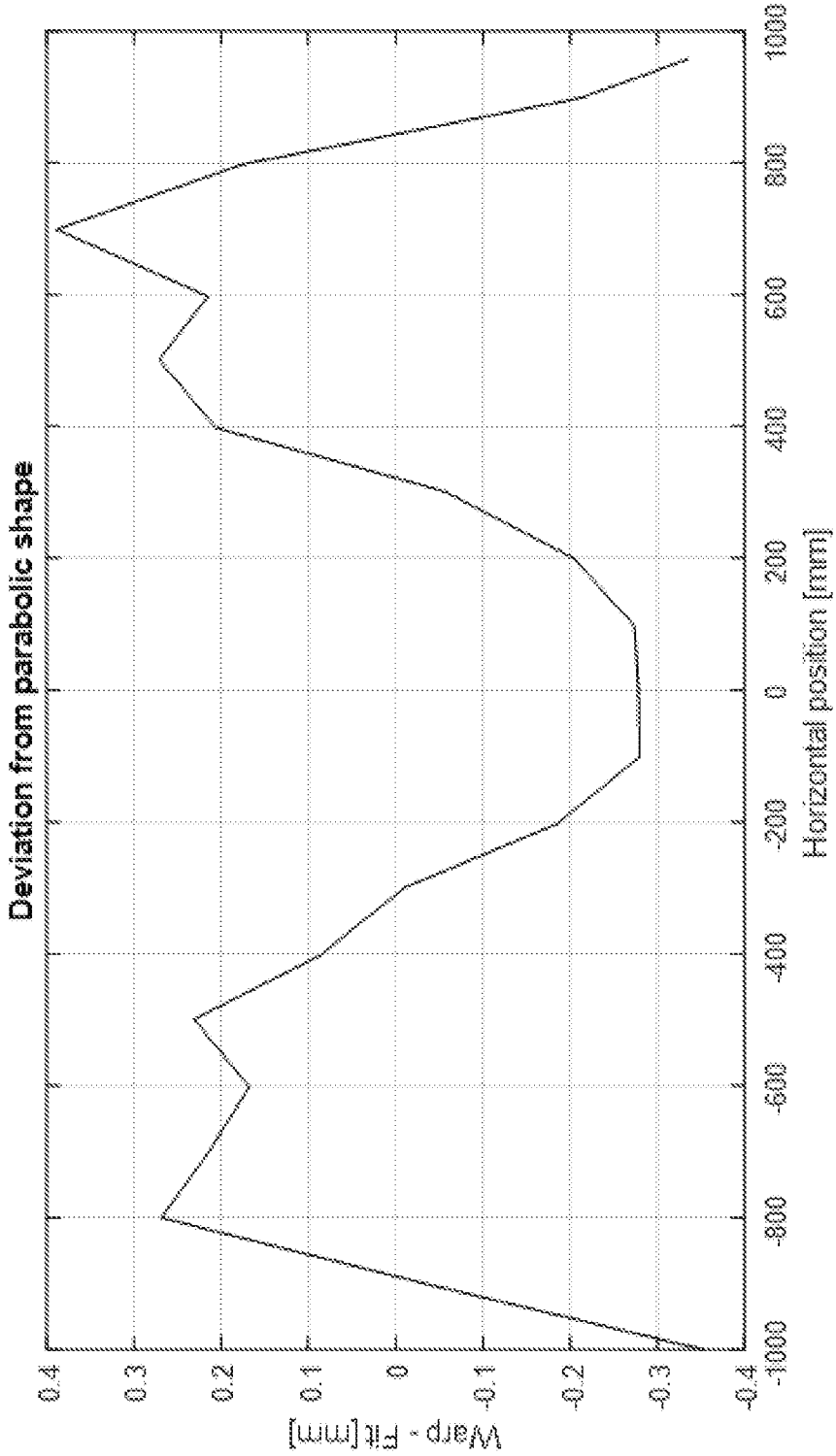
Deviation from parabolic shape
Warp - Fit [mm]
0.4
0.3
0.2
0.1
0
-0.1
-0.2
-0.3
-0.4
-1000
-800
-600
-400
-200
0
200
400
600
800
1000
Horizontal position [mm]

Figure 19b

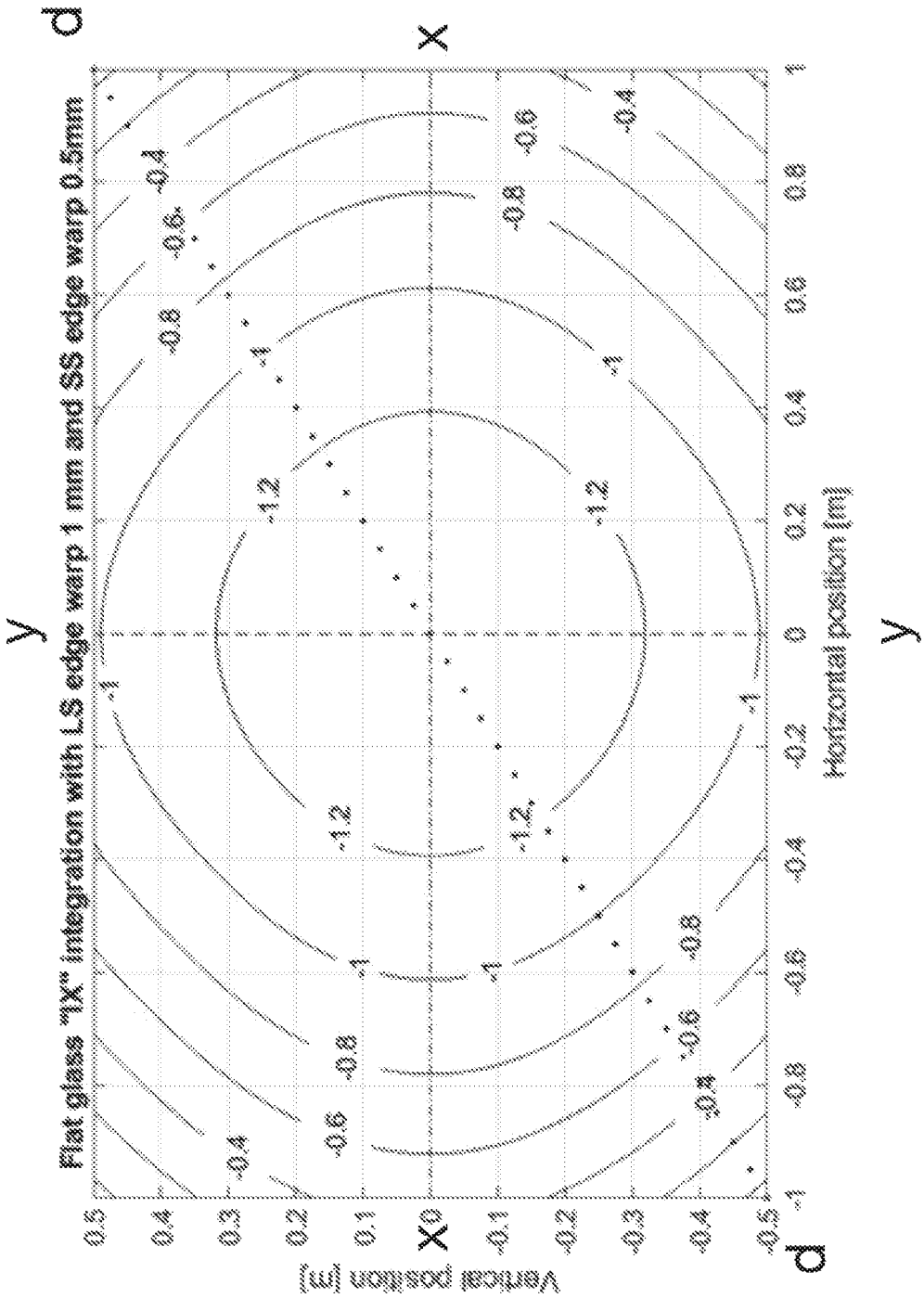
Flat glass "IX" integration with LS edge warp 1 mm and SS edge warp 0.5mm
Vertical position [m]
Horizontal position [m]
x
y
d

Figure 20a

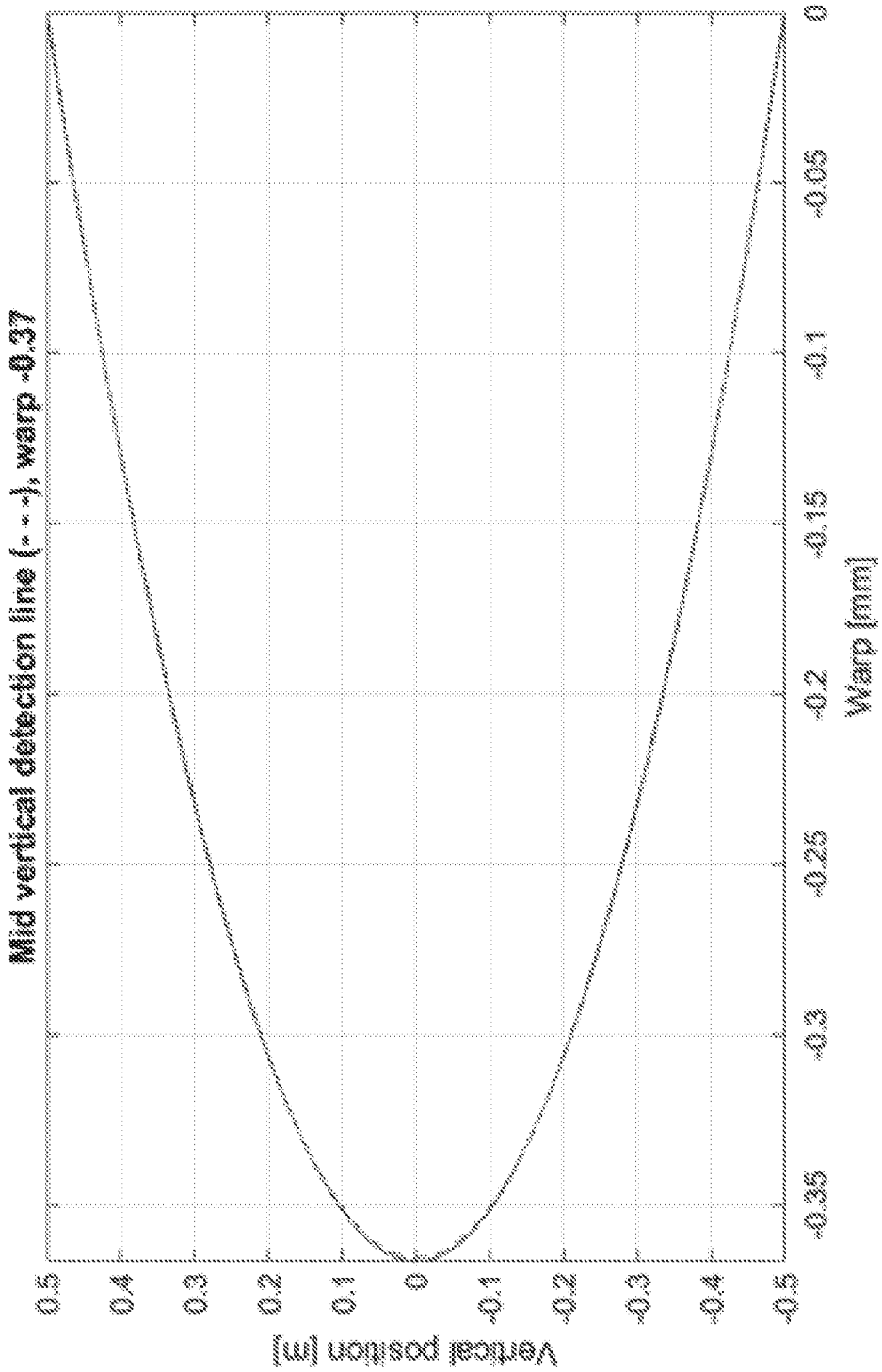
Mid vertical detection line (- - -), warp -0.37
Vertical position [m]
0.5
0.4
0.3
0.2
0.1
0
-0.1
-0.2
-0.3
-0.4
-0.5
-0.35
-0.3
-0.25
-0.2
-0.15
-0.1
-0.05
0
Warp [mm]

Figure 20b

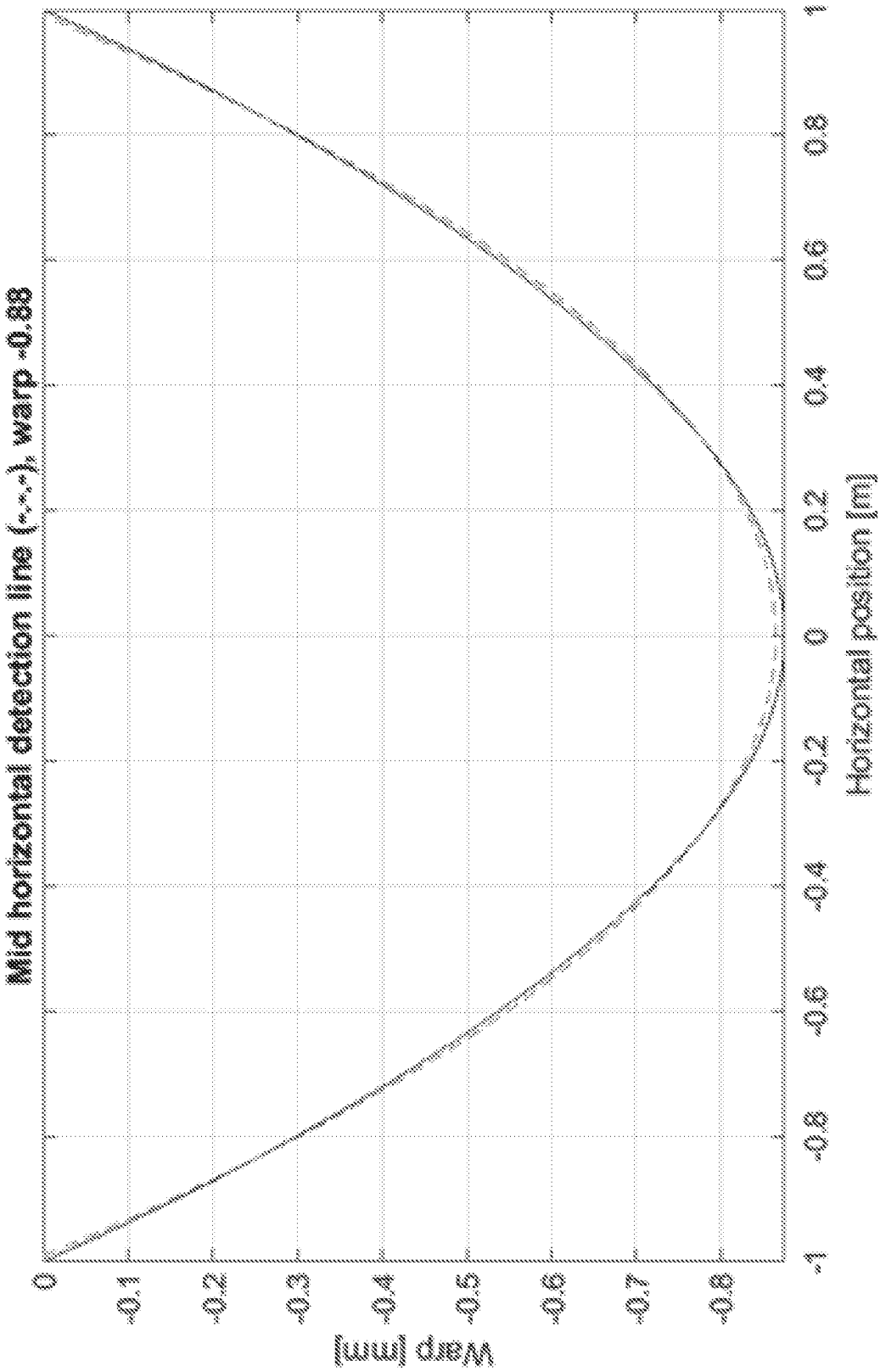
Mid horizontal detection line (-.-.-), warp -0.88
Warp [mm]
0
-0.1
-0.2
-0.3
-0.4
-0.5
-0.6
-0.7
-0.8
-1
-0.8
-0.6
-0.4
-0.2
0
0.2
0.4
0.6
0.8
1
Horizontal position [m]

Figure 20c

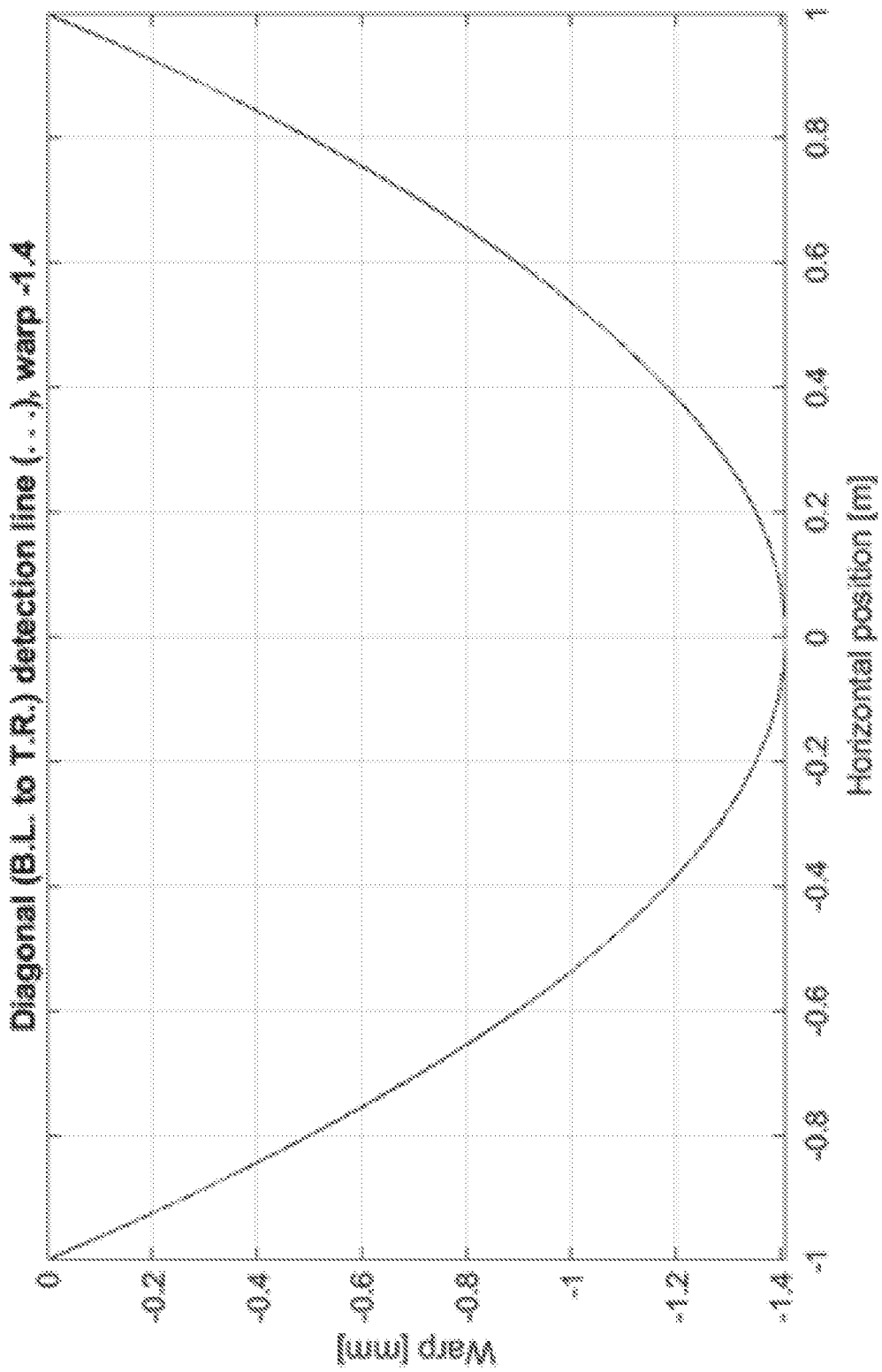
Diagonal (B.L. to T.R.) detection line (. . .), warp -1.4
Warp [mm]
0
-0.2
-0.4
-0.6
-0.8
-1
-1.2
-1.4
-1
-0.8
-0.6
-0.4
-0.2
0
0.2
0.4
0.6
0.8
1
Horizontal position [m]

Figure 20d

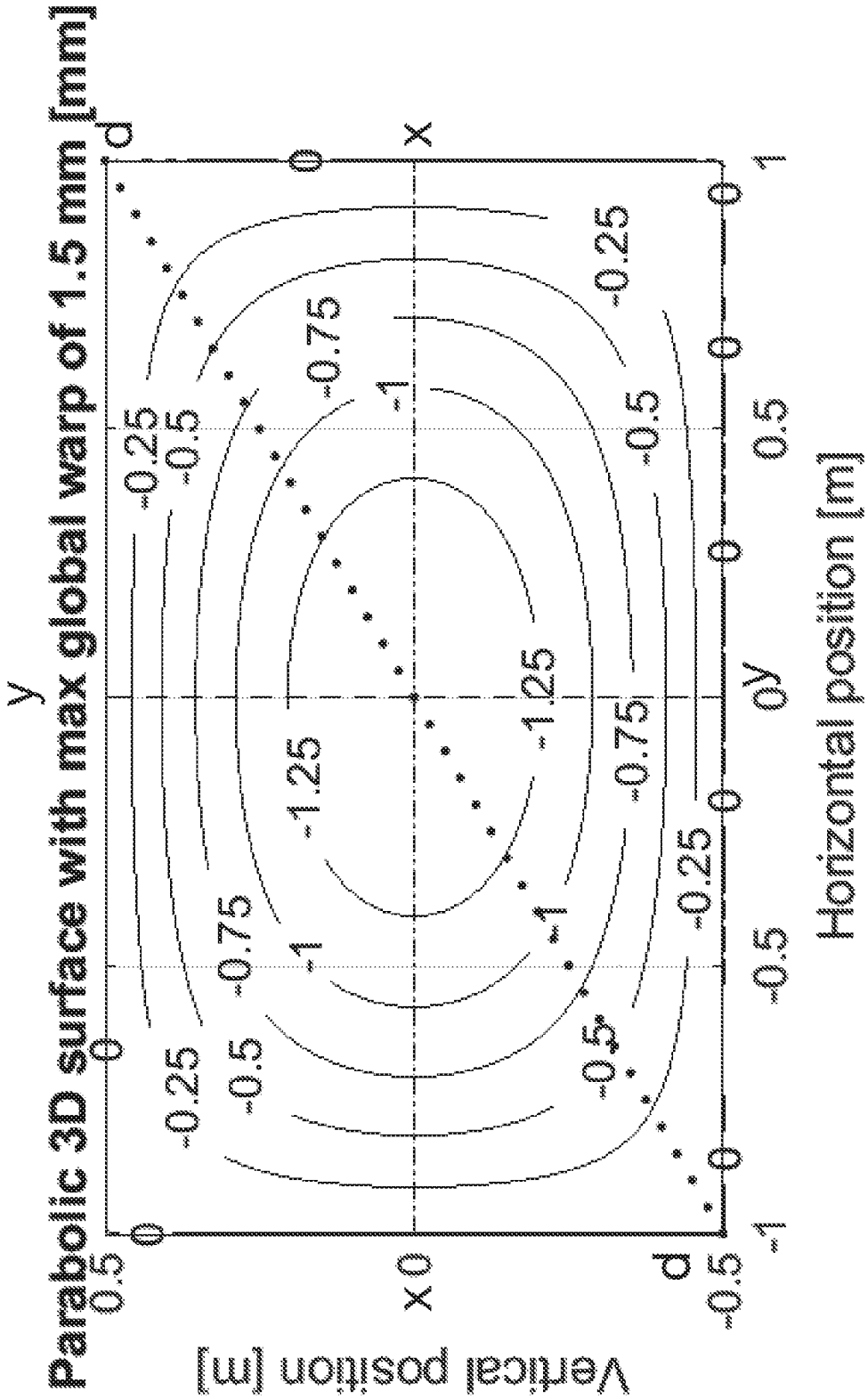
Parabolic 3D surface with max global warp of 1.5 mm [mm]
Vertical position [m]
Horizontal position [m]
x
y
d
0.5
0
-0.5
-1
1
-0.25
-0.5
-0.75
-1
-1.25

Figure 21a

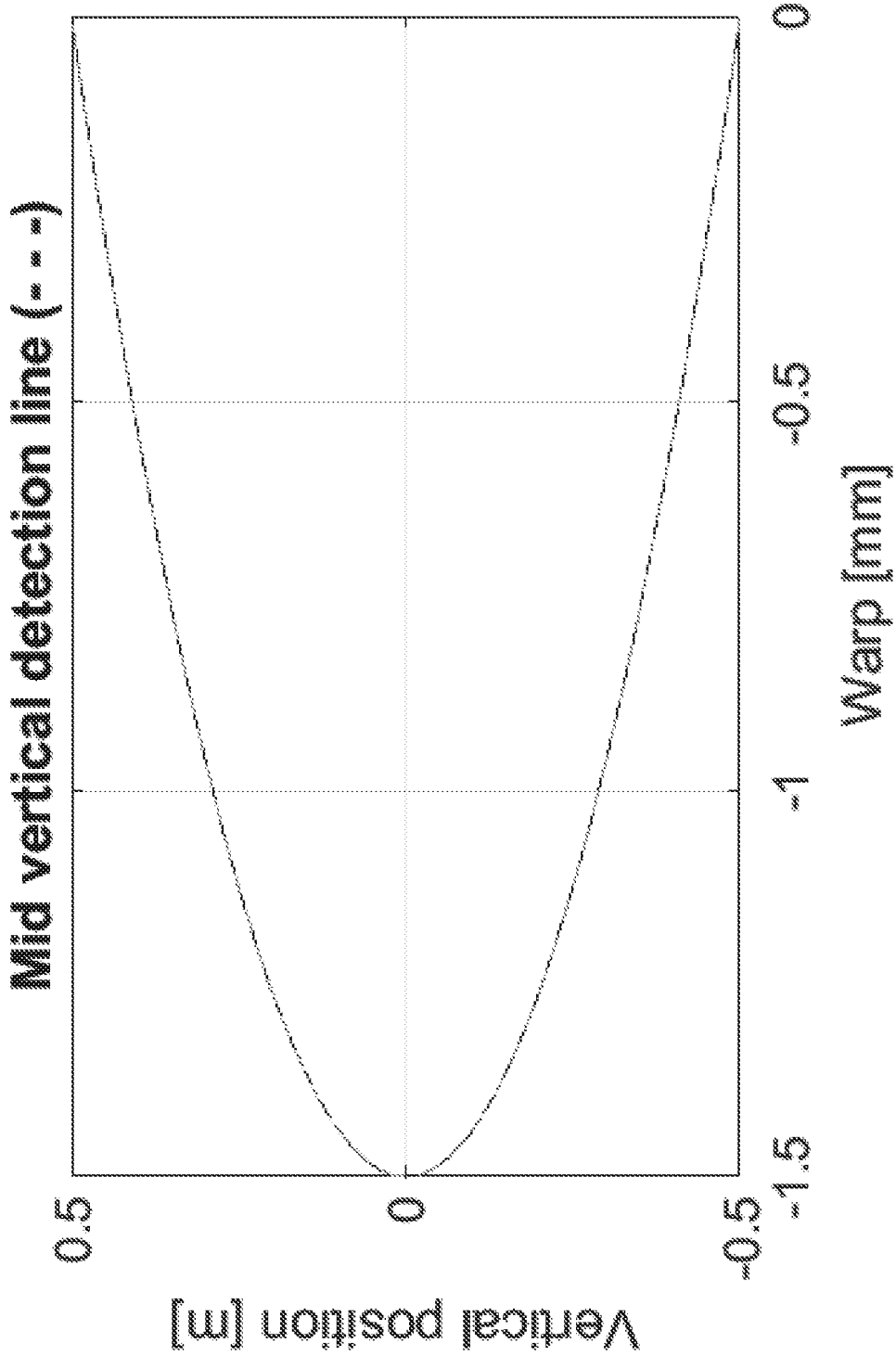
Mid vertical detection line (- - -)
0.5
0
-0.5
Vertical position [m]
-1.5
-1
-0.5
0
Warp [mm]

Figure 21b

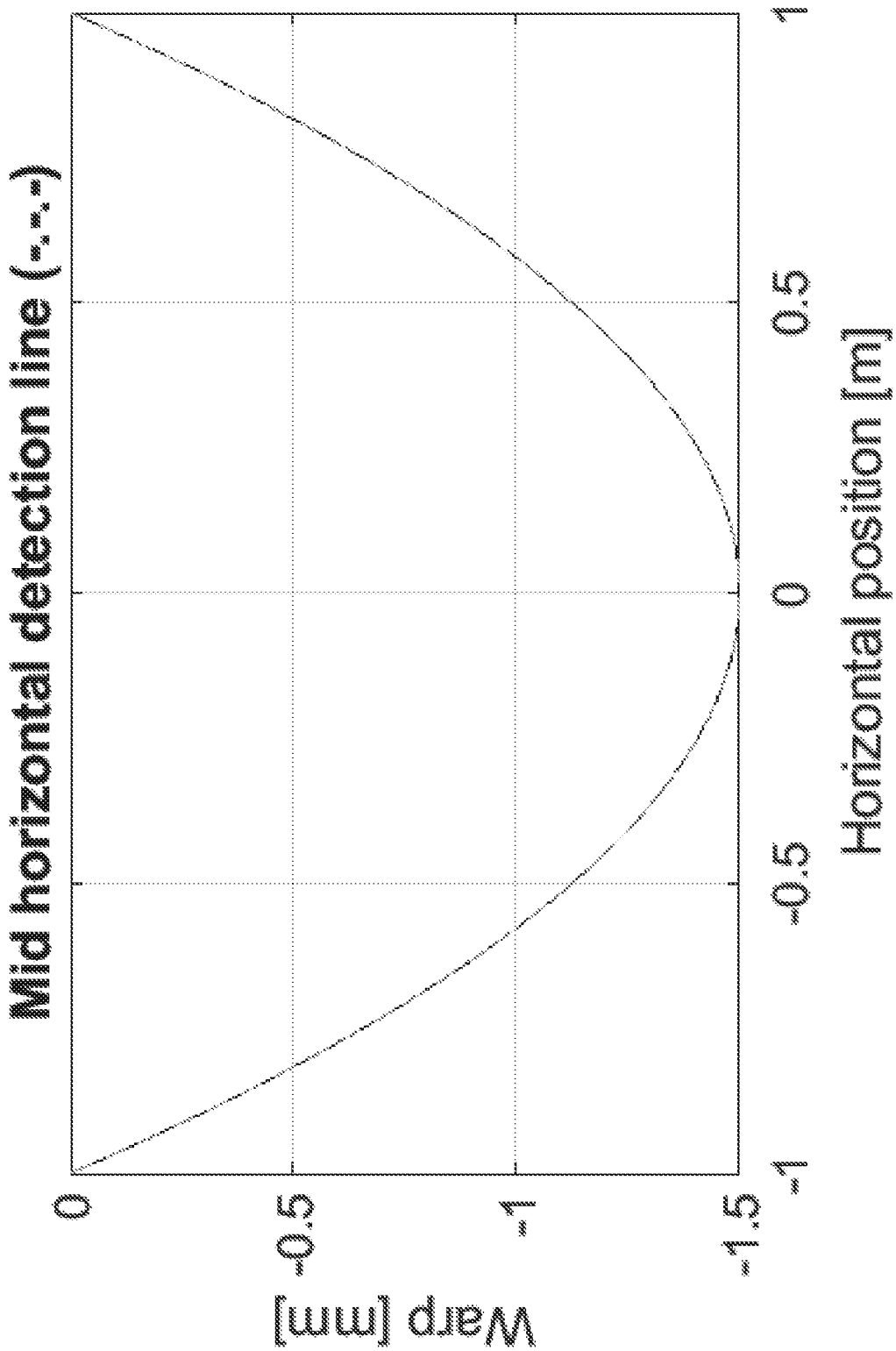
Mid horizontal detection line (-.-.-)
Warp [mm]
0
-0.5
-1
-1.5
-1
-0.5
0
0.5
1
Horizontal position [m]

Figure 21c

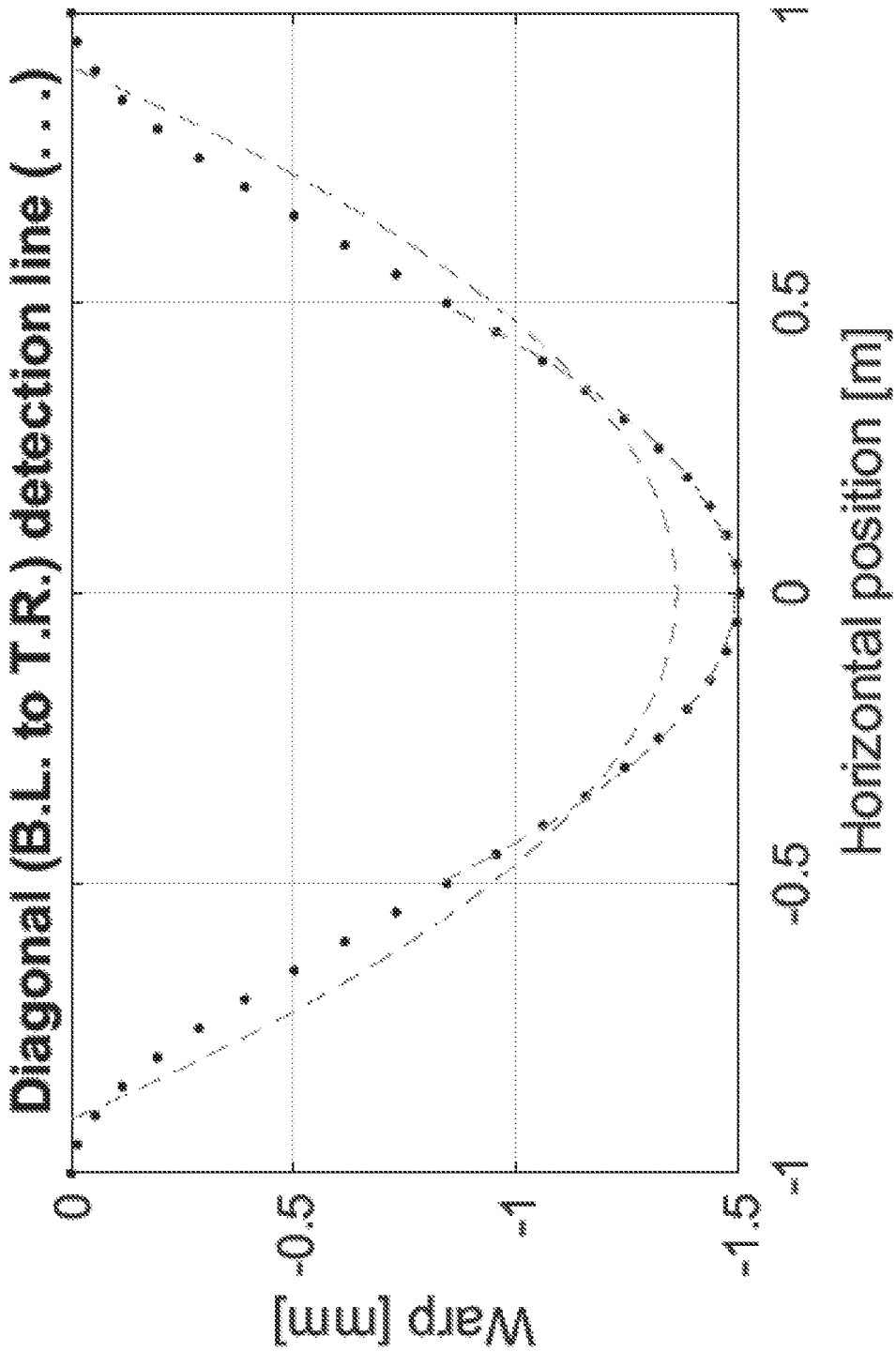
Diagonal (B.L. to T.R.) detection line (. . .)
Warp [mm]
0
-0.5
-1
-1.5
-1
-0.5
0
0.5
1
Horizontal position [m]

Figure 21d

TOUCH DEVICE

INCORPORATION BY REFERENCE TO ANY PRIORITY APPLICATIONS

Any and all applications for which a foreign or domestic priority claim is identified in the Application Data Sheet as filed with the present application are hereby incorporated by reference under 37 CFR 1.57.

BACKGROUND

Field of the Invention

This invention relates in general to the field of optical touch sensitive systems. More particularly, the invention relates to a curved plate and an assembly for holding a plate of the system, such as a glass plate, relative to a panel such that curvature of the plate is controlled. The invention also relates to a method for assembling a plate of an optical touch sensitive system with a panel (such as a display panel) in such a way that curvature is controlled.

Background of the Invention

In one category of touch sensitive panels known as above surface optical touch systems and known from e.g. U.S. Pat. No. 4,459,476, a plurality of optical emitters and optical receivers are arranged around the periphery of a touch surface to create a grid of intersecting light paths above the touch surface. Each light path extends between a respective emitter/receiver pair. An object that touches the touch surface will block certain ones of the light paths. Based on the identity of the receivers detecting a blocked light path, a processor can determine the location of the intercept between the blocked light paths. This type of system is only capable of reliably detecting the location of one object (single-touch detection). Further, the required number of emitters and receivers, and thus cost and complexity, increases rapidly with increasing surface area and/or spatial resolution of the touch panel.

In a variant, e.g. shown in WO2006/095320, each optical emitter emits a beam of light that diverges across the touch surface, and each beam is detected by more than one optical receiver positioned around the periphery of the touch surface.

These systems typically direct light to travel across the surface of the touch surface at a height of up to 5 mm.

Other above surface touch sensitive systems use tomographic touch imaging for sensing a touch, e.g. as described in WO2016/130074. Such systems allow for directing the light much closer to the touch surface, which in turn allows for significant improvements in accuracy and requires a lower light budget. The light is typically directed at a height of up to about 1 mm above the plate.

Typically, the touch surface is a glass plate. In systems where the light is directed closer to the touch surface, distortions in the plate have a disproportionally large effect on the light signal. Therefore, glass plates as used in previously known above surface optical touch systems are unsuitable when the light is transmitted closer to the plate, since the accuracy of the system is impaired by the distortions in the plate.

Additionally, a frame for assembly of the plate of the optical touch sensitive system and a panel, such as an LCD panel, may introduce distortion in the form of uncontrolled warpage, i.e. a twist or curve in the plate is introduced even if it is usually flat. The uncontrolled warpage may even block the light transmitted across the plate. This is due to uncontrolled twisting of the frame as such when it is attached to the panel.

Although not described in relation to touch systems, methods of minimizing glass warpage are known from the window industry and from the display panel industry. Such solutions include pre-bent glass in order to control warpage. However, such solutions are unsuitable/insufficient for touch sensitive systems since they typically require bulky frames at the border of the glass and/or pressure points closer to the center of the panel where force may be applied to control the shape of the glass. These solutions are unsuitable where a minimal/lightweight border bezel is required, and no supporting objects may touch the glass further in than at the borders. Additionally, pre-bent glass is expensive and fragile to transport.

Therefore, an improved frame assembly for holding a plate of an optical touch sensitive system relative to a panel would be advantageous and in particular allowing for improved precision, increased compactness, cost-effectiveness, and/or controlled curvature would be advantageous. Further, a touch panel having a shape conducive to transmitting as much light from the emitters as possible to the detectors is needed.

SUMMARY OF THE INVENTION

Accordingly, embodiments of the present invention preferably seek to mitigate, alleviate or eliminate one or more deficiencies, disadvantages or issues in the art, such as the above-identified, singly or in any combination by providing an assembly, a method for assembling, and a kit of frame elements according to the appended patent claims.

A first embodiment of the invention describes an assembly for holding and controlling curvature of a plate for an optical touch sensitive system, comprising a first frame element extending in a first plane and configured to extend at least partially around a panel; at least one second frame element extending in a second plane and forming a support portion for the plate, and at least one spacing element positioned at least partially between the support portion and the first frame element, the spacing element being configured to control a curvature of the first frame element, and wherein the at least one second frame element is configured to engage the plate at the support portion, is attached to the first frame element, and wherein the shape and/or position of the second frame element is controlled by the curvature of the first frame element with said spacing element, to control a curvature of the plate.

A second embodiment of the invention describes a method for assembling a panel and a plate for an optical touch sensitive system, comprising: providing a first frame element extending in a first plane and configured to extend at least partially around a panel; providing at least one second frame element forming a support portion for the plate; supporting the plate by the support portion; attaching the second frame element to the first frame element such that the support portion extends at least partially in a second plane generally opposite at least a portion of the first frame element and is spaced apart from the first plane; and controlling a curvature of the first frame element with a spacing element attached to the first frame element and thereby tilting the support portion to control a curvature of the plate.

A third embodiment of the invention describes a kit of frame elements for assembling a panel and a plate for a touch sensitive system, comprising: a first frame element

extending in a first plane; at least one second frame element forming a support portion for the plate and being attachable to the first frame element, and a spacing element adjustably attachable to the first frame element; wherein at least a portion of the support portion is tiltable, by the spacing element, relative to the first frame element to extend in the second plane, which is curved.

Some embodiments of the invention provide for controlling curvature of a plate for an optical touch sensitive system such that it does not occur when the plate is assembled with a panel. This prevents distortion in the plate from affecting a light signal transmitted across the plate, which in turn allows improvements in accuracy and lower light budget of the system. Additionally, or alternatively, embodiments provide for controlling curvature such that the field of view, for a detector receiving light from a light emitter of the touch sensitive system, is increased compared to a substantially flat plate. Again, the improved field of view provides for improved accuracy of the touch sensitive system and allows for a better light budget. Furthermore, embodiments provide for an assembly that is compact at the same time as curvature may be controlled. Also, the curvature may be controlled without contacting the center of the plate.

A fourth embodiment of the invention describes a touch sensing apparatus, comprising a touch surface; a set of emitters arranged around the touch surface to emit first beams of light to propagate across the touch surface, a set of light detectors arranged around the touch surface to receive light from the first set of emitters, wherein each light detector is arranged to receive light from more than one emitter; a processing element configured to determine, based on output signals of the set of light detectors, the position of an object on the touch surface, wherein the touch surface is curved in a first axis according to a first parabola.

It should be emphasized that the term "comprises/comprising" when used in this specification is taken to specify the presence of stated features, integers, steps or components but does not preclude the presence or addition of one or more other features, integers, steps, components or groups thereof.

BRIEF DESCRIPTION OF THE DRAWINGS

These and other aspects, features and advantages of which embodiments of the invention are capable of will be apparent and elucidated from the following description of embodiments of the present invention, reference being made to the accompanying drawings, in which:

FIG. **1** is a top view of the first frame element showing cross-sectional axes A-A and B-B;

FIGS. **2***a*-**2***d* are cross-sectional views of embodiments of assemblies;

FIG. **3***a* is a schematic illustration showing the cross-section axis B-B of FIG. **1** of the assembly with the second frame element relative to the first frame element and holding the plate in a flat plane;

FIG. **3***b* is a schematic illustration showing the cross-section axis A-A of FIG. **1** of the assembly with the second frame element relative to the first frame element and holding the plate in a flat plane;

FIG. **3***c* is a schematic view (cross section) showing the cross-section axis B-B of FIG. **1** of the assembly with the second frame element warped relative to the first frame element and holding the plate in a curved plane that is concave;

FIG. **3***d* is a schematic view (cross section) showing the cross-section axis A-A of FIG. **1** of the assembly with the second frame element warped relative to the first frame element and holding the plate in a curved plane that is concave;

FIG. **4***a* is a perspective view of the first frame element;

FIG. **4***b* is a schematic illustration of the panel in a convex shape and the frame of the first frame element in a concave shape, including plate **2** also controlled into a concave shape;

FIG. **4***c* is a side view showing screws **116***a* and **116***b;*

FIGS. **5***a*-**5***h* are side views and perspective views of an embodiment of the assembly comprising a screw arrangement for configuring frame shape; and

FIG. **6** is a schematic cross section from a first direction of an embodiment of the assembly;

FIG. **7** is a schematic side-view of another embodiment for providing curvature of plate **2**;

FIG. **8** shows an isometric view of a variation of the embodiment of FIGS. **5***a*-**5***g;*

FIG. **9** is a diagram showing a top down view of an optical touch system and corresponding detection lines;

FIG. **10***a* shows an isometric view of a flat touch surface of an optical touch system;

FIG. **10***b* shows a section view of an optical touch system with a flat touch surface;

FIG. **11***a* shows an isometric view of a touch surface of an optical touch system having a curved profile in the x-axis;

FIG. **11***b* shows a section view along the x-axis of an optical touch system with a touch surface having a curved profile in the x-axis;

FIG. **11***c* shows a section view along the x-axis of an optical touch system with a touch surface having a curved profile in the x-axis;

FIG. **11***d* shows an example of types of warpage that a touch panel may exhibit.

FIG. **12***a* shows top view of a touch surface of an optical touch system;

FIG. **12***b* shows an isometric view of a touch surface of an optical touch system having a curved profile in the x-axis and a curved profile in the y-axis;

FIG. **12***c* shows a section view along the x-axis of an optical touch system with a touch surface having a curved profile in the x-axis and a curved profile in the y-axis;

FIG. **12***d* shows a section view along the y-axis of an optical touch system with a touch surface having a curved profile in the x-axis and a curved profile in the y-axis;

FIG. **13***a* shows a section render of light emitted from a point at an edge of a curved touch surface and propagating across the curved touch surface to be received at a detector at an opposite edge of the touch surface;

FIG. **13***b* shows a graph of light emitted from a point at an edge of a curved touch surface and received at a detector at an opposite edge of the touch surface with respect to the angle of the emitter light;

FIG. **14***a* shows a section render of light emitted from a point at an edge of a curved touch surface and propagating across the curved touch surface to be received at a detector at an opposite edge of the touch surface;

FIG. **14***b* shows a graph of light emitted from a point at an edge of a curved touch surface and received at a detector at an opposite edge of the touch surface with respect to the angle of the emitter light;

FIG. **13***a* shows a section render of light emitted from a point at an edge of a curved touch surface and propagating across the curved touch surface to be received at a detector at an opposite edge of the touch surface;

FIG. **15***b* shows a graph of light emitted from a point at an edge of a curved touch surface and received at a detector at an opposite edge of the touch surface with respect to the angle of the emitter light;

FIG. **16***a* shows a section render of light emitted from a point at an edge of a curved touch surface and propagating across the curved touch surface to be received at a detector at an opposite edge of the touch surface;

FIG. **16***b* shows a graph of light emitted from a point at an edge of a curved touch surface and received at a detector at an opposite edge of the touch surface with respect to the angle of the emitter light;

FIG. **17***a* shows a section render of light emitted from a point at an edge of a curved touch surface and propagating across the curved touch surface to be received at a detector at an opposite edge of the touch surface;

FIG. **17***b* shows a graph of light emitted from a point at an edge of a curved touch surface and received at a detector at an opposite edge of the touch surface with respect to the angle of the emitter light;

FIG. **18***a* shows a curvature of a real touch surface vs a parabolic curved surface along an x-axis;

FIG. **18***b* shows a deviation between a real touch surface vs a parabolic curved surface along an x-axis;

FIG. **19***a* shows a curvature of a real touch surface vs a parabolic curved surface along an x-axis;

FIG. **19***b* shows a deviation between a real touch surface vs a parabolic curved surface along an x-axis;

FIG. **20***a* shows top view of displacement contours for a touch surface according to an embodiment;

FIG. **20***b* shows curvature of a touch surface along an x-axis according to the embodiment of FIG. **20***a;*

FIG. **20***c* shows curvature of a touch surface along a y-axis according to the embodiment of FIG. **20***a;*

FIG. **20***d* shows curvature of a touch surface along a diagonal line according to the embodiment of FIG. **20***a;*

FIG. **21***a* shows top view of displacement contours for a touch surface according to another embodiment;

FIG. **21***b* shows curvature of a touch surface along an x-axis line according to the embodiment of FIG. **21***a;*

FIG. **21***c* shows curvature of a touch surface along a y-axis line according to the embodiment of FIG. **21***a;*

FIG. **21***d* shows curvature of a touch surface along a diagonal line according to the embodiment of FIG. **21***a.*

DETAILED DESCRIPTION OF THE PREFERRED EMBODIMENT

Specific embodiments of the invention will now be described with reference to the accompanying drawings. This invention may, however, be embodied in many different forms and should not be construed as limited to the embodiments set forth herein; rather, these embodiments are provided so that this disclosure will be thorough and complete, and will fully convey the scope of the invention to those skilled in the art. The terminology used in the detailed description of the embodiments illustrated in the accompanying drawings is not intended to be limiting of the invention. In the drawings, like numbers refer to like elements.

In optical touch sensitive systems, a plate **2** of the system, such as a glass plate may be arranged opposite a panel **1**, such as an LCD panel or additional frame. The plate **2** is normally substantially flat. The perimeter of the plate **2** after integration is a concern: the four sides/edges of the plate **2** must all be plane or slightly concave as seen from the touch surface, i.e. the side of the plate **2** above which light is transmitted. An aspect of this is to ensure that the mechanical parts that hold or support the perimeter of the plate **2** are free from convexity. Sometimes, there are several components that are involved in holding the plate **2** (back cover, carriers, edge cover, screw bosses etc.) The stiffer component of the assembly, the more it will govern the final shape of the plate **2**.

In prior art solutions, the frame that holds the plate **2** at the edge/perimeter may introduce some twist (the corners will not lay perfectly on a flat plane) to the plate. Twist may induce convexity along the plate diagonals and should thus be minimized or avoided. The twist tolerance depends, e.g., on glass specification, product, size, shape of integrated glass perimeter, and on how a VESA mount is attached.

FIG. **1** shows an embodiment of a frame assembly **100**, **200** that prevents inducement of convexity along the plate, such as along the plate edges and/or diagonals. Some embodiments avoid convexity and may even induce concavity to further improve the touch system. Frame **109** is formed from first frame element **102**. Attachment element **112** and spacing element **116** are described in the embodiments below.

According to some embodiments of the invention, an assembly **100**, **200**, which is configured to hold or support the plate **2** and the panel **1**, applies a controlled force to the plate **2** such that curvature of the plate **2** is controlled. In the embodiments illustrated in FIGS. **2***a*-**2***c* and **3***a*-**3***d*, the force applies a torque to a support portion **101***a*, **101***b* for the plate **2**. In the embodiments of FIGS. **4***a*-**4***c*, the force is substantially straight and perpendicular to the plate **2**. In the following, the embodiments of FIGS. **2***a*-**2***c*, **3***a*-**3***d*, **4***a*-**4***c*, and **5***a*-**5***g* will be described separately. However, these embodiments may be combined to provide further embodiments, such as the combination illustrated in FIGS. **6***a*-**6***c*.

FIGS. **2***a*-**2***d* illustrate embodiments wherein the frame assembly **100** comprises a first frame element **102** and at least one second frame element **103***a*, **103***b*. The first frame element **102** may form a rear bracket frame that extends at least partially over the backside of the panel **1**. The second frame element **103***a*, **103***b* may form a holder or support bracket. Furthermore, second frame element **103***a*, **103***b* may extend along at least a portion of a perimeter of the plate **2** and/or the panel **1**. Separate second frame elements **103***a*, **103***b* may extend at least partially along the perimeter of different sides of the plate **2** and/or panel **1**. For example, two second frame elements **103***a*, **103***b* may extend along opposing perimeters of the plate **2** and/or panel **1**. Alternatively, four second frame elements **103***a*, **103***b* may extend along the perimeter of the plate **2** and/or panel **1**, i.e. one along each side of a rectangular plate **2** and/or panel **1**.

As is illustrated in FIGS. **4***a*-**4***c*, the panel **1** may be held between the first frame element **102** and the second frame element **103***a*, **103***b*. The plate **2** may be supported or held at a first side of a portion of the second frame element **103***a*, **103***b* forming the support portion **101***a*, **101***b*. The panel **1** may be held or supported by a second side of the support portion **101***a*, **101***h*, which forms a support portion for the panel **1**. An adhesive **104**, such as an adhesive tape, may be arranged between the support portion **101***a*, **101***b* and the plate **2**. A gasket **105** may be arranged between the support portion **101***a*, **101** *b* and the panel **1**.

In one embodiment, elements **102**, **103** (shown in the figure as comprising elements **103***a* and **103***b*) are formed from a single piece.

The second frame element **103***a*, **103***b* may be attached to the first frame element **102**.

In the embodiments of FIGS. **2***a*-**2***c* and **3***a*-**3***d*, the second frame element **103***a*, **103***b*, is attached to the first frame

element **102** by at least one attachment member **106***a*, **106***b*, such as a screw, a weld, a rivet etc. Therefore, the second frame element **103***a*, **103***b* may be rigidly attached to the first frame element **102**.

The first frame element **102** may comprise a flange **107***a*, **107***b* that extends at the perimeter of the first frame element **102**. Similarly, the second frame element **103***a*, **103***b* may comprise a flange **108***a*, **108***b*. When assembled, the flange **107***a*, **107***b* of the first frame element **102** may be arranged in abutment with the flange **108***a*, **108***h* of the second frame element **103***a*, **103***b*. The flange **107***a*, **107***b* of the first frame element **102** may be held together with the flange **108***a*, **108***b* of the second frame element **103***a*, **103***b* by the attachment member **106***a*, **106***b*.

The first frame element **102** may form a frame **109** (shown in FIG. **1**) that extends in a first plane. The frame **109** is configured to extend at least partially around a first side of a panel **1**. The first side of the panel **1** may be the backside of the panel **1**. In some embodiments, the frame **109** has a width, such as 3-10 cm. The frame **109** may extend from the edges of the first side towards the center of the first side of the panel **1**. Therefore, the frame **109** may be rectangular, and made from a single piece of material.

As is illustrated in FIGS. **3***a* and **3***b*, the assembly **100** may comprise at least one support area **110***a*, **110***b* for supporting a back cover **111**. The support area **110***a*, **110***b*) may extend in a plane that is substantially parallel to the first plane, in which the frame **109** extends. The support area **110***a*, **110***b* may be located further away from the support portion **101***a*, **101***b* of the second frame element **103***a*, **103***b* than the frame **109**, such that the frame **109** and the back cover **111** are spaced apart. In the illustrated embodiment, the support area **110***a*, **110***b* is provided between the flange **107***a*, **107***b* and the frame **109** of the first frame element **102**. The back cover **111** may be attached to the support area **110***a*, **110***b*, e.g. by attachment elements, such as screws.

In other embodiments, the support area **110***a*, **110***b* is provided by the flange **108***a*, **108***b* of the second frame element **103***a*, **103***b*. The flange **107***a*, **107***b* of the first frame element **102** may be connected to the second frame element **103***a*, **103***b* between the flange **108***a*, **108***b* and the support portion **101***a*, **101***b* of the second frame element **103***a*, **103***b*.

The second frame element **103***a*, **103***h* may form the support portion **101***a*, **101** *b*. For example, the second frame element **103***a*, **103***b* may form an elongated member that is at least partly L-shaped in cross-section. When assembled, the second frame element **103***a*, **103***b* may extend along the perimeter of the panel **1**, and wrap around the perimeter of the panel such that the support portion **101***a*, **101***b* extends at least partially in a second plane generally opposite the frame **109** and spaced apart from the first plane. Thereby the second frame element **103***a*, **103***b* is configured to extend at least partially at a second side of the panel **1**, e.g. at a front side of the panel **1**.

In some embodiments, the second frame element **103***a*, **103***b* has a first portion and a second portion. The first portion may be provided at an angle relative to the second portion. The second portion may form the support portion **101***a*, **101***b* and be configured to extend in the second plane opposite the frame **109**. The first portion may extend between the second portion and the first frame element **102**. Also, the first portion may extend along the edge or side surface of the plate **2** when assembled. The first frame element **102** may be connected to the first portion of the second frame element **103***a*, **103***b*. The first portion may be substantially perpendicular to the second portion.

As is illustrated in FIGS. **3***a*-**3***d*, the first frame element **102** may be attached to the first portion of the second frame element **103***a*, **103***b* such they are fixed relative to each other. Furthermore, the second frame element **103** is tiltable relative to the first frame element **102**. A force applied to the first frame element **102** is transferred to the second frame element **103** such that the support portion **101***a*, **101***b* is tilted towards the first frame element **102**. Thus, a torque may control tilt of the second portion of the second frame element **103***a*, **103***b*, i.e. the support portion **101***a*, **101***b* that supports the plate **2**, relative to the first frame element **102**, which is illustrated with a curved arrow in FIGS. **3***c* and **3***d*. In some embodiments, the angle of tilt of the support portion **101***a*, **101***b* is controlled to be neutral, i.e. the angle of tilt of the support portion **101***a*, **101***b* is controlled such that it is substantially parallel with the panel **1** and/or controls the plate **2** to be in a flat plane, as is illustrated in FIGS. **3***a* and **3***b*. In other embodiments, the angle of tilt of the support portion **101***a*, **101***b* is controlled to be negative relative to the touch surface, i.e. the angle of tilt of the support portion **101***a*, **101***b* is controlled such that the free end of the support portion **101***a*, **101***b* is tilted towards the frame **109**, as is illustrated in FIGS. **3***c* and **3***d*. In the latter case, the plate **2** is given a slightly concave shape, i.e. in the direction from the touch surface of the plate **2** towards the panel **1**. In each of these cases curvature is controlled such that the field of view, for a detector receiving light from a light emitter of the touch sensitive system, is improved since convexity in the plate is avoided. Again, improved field of view provides for improved accuracy of the touch sensitive system and allows for lower light budget. Furthermore, since the support portion **101***a*, **101***b* only needs to extend a short distance over the plate **2** at the perimeter the assembly is compact at the same time as curvature may be controlled. Also, curvature may be controlled without contacting the center of the plate. When the concavity is applied, the sensitivity of the system may be even further improved.

FIGS. **2***a*-**2***d* and **3***a*-**3***d* illustrate embodiments of an attachment element **112** for attaching the first frame element **102** to the panel. A plurality of attachment elements **112** (e.g. as shown in triplicate as elements **112***a*, **112***b*, and **112***c*) may be arranged around the frame **109**, such as at each corner of the frame **109**, which is illustrated as circles in FIG. **4***a*. Each attachment element may comprise a group of screws **112***a*, **112***b*, **112***c*, **113***a*, **113***b*. Each screw may be arranged in a hole of the frame **109**, which may be threaded. Each attachment element may comprise at least two screws **112***a*, **112***b*, **112***c*, **113***a*, **113***b*. At least one of the screws **112***a*, **113***a* may be arranged to displace the frame **109** away from panel **1**, which is indicated with an arrow in FIG. **2***d* e.g. by having a thread in the frame **109** and pushing on the panel **1**. At least one other of the screws **112***b*, **112***c*, **113***b* may be arranged to displace the frame **109** towards the panel **1**, which is also indicated with an arrow in FIG. **2***d*. e.g. by having a thread in the panel and a hole in frame **109**,

FIG. **2***a* illustrates an embodiment wherein each attachment element comprises at least three screws **112***a*, **112***b*, **112***c*. All three screws **112***a*, **112***b*, **112***c* are arranged closer to a center of the first frame element **102** than a perimeter of the support portion **101***a*, **101***b*, i.e. an imaginary extension **114***a*, **114***b*, **114***c* of the longitudinal axis of each screw **112***a*, **112***b*, **112***c* passes outside the support portion **101***a*, **101***b* when viewed in cross-section, as is illustrated in FIG. **2***a*. In the illustrated embodiment, a first screw **112***a* is arranged between a second screw **112***b* and a third screw **112***c*. FIG. **2***a* only illustrates one group of screws. However, a group of

screws may be arranged at any location around the frame **109** to attach the first frame element **102** to the panel **1**.

FIG. **2***b* illustrates an embodiment wherein each group of screws consists of only two screws **113***a*, **113***b*. A first screw **113***a* is arranged opposing the support portion **101***a*, **101***b*, i.e. an imaginary extension **115***a* of the longitudinal axis of the first screw **113***a* passes through the support portion **101***b* when viewed in cross-section, such as through the center thereof, as is illustrated in FIG. **2***b*. A second screw **113***b* of the two screws is arranged closer to a center of the first frame element **102** than a perimeter of the support portion **101***b*, i.e. an imaginary extension **115***b* of the longitudinal axis of the first screw **113***b* passes outside the support portion **101***b* when viewed in cross-section, as is illustrated in FIG. **2***b*.

As shown in FIG. **2***d*, the first screw **112***a* is arranged to displace the frame **109** away from panel **1**. This may be enabled by a threaded hole **112***i* in the frame **102** which the first screw engages while a head of the screw abuts the panel **1**. The second screw **112***b* is arranged to displace the frame **109** towards the panel. This may be enabled by a threaded hole **112***f* in the panel **1**, which the second screw **112***b* engages while the head of the second screw **112***b* abuts the surface of the frame. By using screw **112***a* and/or **112***b*, forces may be applied to frame **102** and/or panel **2** to control bending or rotation of the frame/panel.

Since the first screw **113***b* is aligned over the support portion **101***a*, **101***b* in the embodiment of FIG. **2***h*, only two screws are required to control bending or rotation of the frame.

In FIGS. **2***a*-**2***b*, only one group of screws is illustrated. However, a group of screws may be arranged at any location around the frame **109** to support the plate **2** and the panel **1**.

FIG. **2***c* illustrates that a combination the embodiment of FIGS. **2***a* and **2***b*, i.e. groups of screws with two as well as three screws may be arranged around the frame **109**. Therefore, flexibility is provided for.

As is illustrated in FIGS. **2***a*-**2***c* and **3***c* and **3***d*, each group of screws **112***a*, **112***b*, **112***c*, **113***a*, **113***b* may apply a force to the frame **109**. Therefore, a torque may be applied at the second frame element **103***a*, **103***b* via controlling the curvature of the frame **109** such that tilt of the support portion **101***a*, **101***b*, and thereby curvature of the plate, is controlled. In the assembly illustrated in FIG. **3***a*, a net force is applied such that the frame is substantially flat and parallel with the panel **1**. In the assembly illustrated in FIGS. **3***c* and **3***d*, a net force away from the support portion **101***a*, **101***b* is provided to the frame **109**, which will be slightly concave when viewed from the touch surface of the plate **2**. As a consequence, a torque will be provided at to the second frame element **103***a*, **103***b*, which will tilt the support portion **101***a*, **101***b* along the edge or perimeter of the plate **2**. Therefore, controlling the curvature of the first frame element **109** may control curvature of the plate. The plate **2** may become concave as viewed from the touch surface of the plate **2**.

FIGS. **4***a*-**4***c*, **5***a*-**5***g* and **6***a*-**6***c* illustrate embodiments wherein an alternative or additional control of the shape of the frame **109** may be introduced. As shown in FIG. **4***a*, attachment elements **112** may be arranged at the corners of the frame **109**. The attachment elements **112** may comprise the group of screws **112***a*, **112***b*, **112***c*, **113***a*, **113***b* as described above with regard to FIGS. **2***a*-**2***c* and **3***a*-**3***d*. The attachment elements **112** may be arranged to pull the panel **1** towards the frame **109**. This may be done with or without tilting the support portion **101***a*, **101***b* as described above. At least one spacing element **116** (where spacing element **116** may comprise screw **112** and a separate spacing component) may be arranged along the perimeter of the frame **109** between two attachment elements **112**. The spacing element **116** is arranged in the assembly to apply a force to the frame **109** directed away from the panel **1**. Thereby, a force applied by the spacing element **112** may be transferred to the second frame element **103***a*, **103***b* such that the support **101***a*, **101***b* is tilted as described above, whereby curvature of the plate **2** is controlled.

As is illustrated in FIG. **4***b*, the general shape of the frame **109** will be concave, whereas the general shape of the panel **1** may be convex. The panel may also remain substantially plane depending on its rigidity. The resulting shape of the plate **2** will be concave. Therefore, each side of the frame **109** may be controlled to follow a curved path. The curvature may be controlled by adjusting the force applied by each spacing element **116** and/or via the number of spacing elements **116** along each side of the frame **109**. As a result, the support portion **101***a*, **101***b*, at least at the free end of the support portion **101***a*, **101***b*, may also follow a curved path. Therefore, at least a portion of the support portion **101***a*, **101***b* may extend in a plane that is curved.

When the second frame element **103***a*, **103***b* is disassembled or only attached to the first frame element **102**, it may have a relaxed state. In the relaxed state, the support portion **101***a*, **101***b* extends in a plane that is substantially flat. The second frame element **103***a*, **103***b* may be deflectable from the relaxed state to a deflected state or stressed state, such as by the attachment elements **112** and spacing elements **116**. The level of tilt at the opposing ends of the support **101***a*, **101***b* where the attachment elements **112** are provided may be less than the level of tilt between the ends where spacing element(s) **116** is/are provided. As consequence, the second frame element **103***a*, **103***b* may be deflected to the deflected or stressed state. In the deflected or stressed state, the support portion **101***a*, **101***b* extends, along its length, in a plane that is curved. A cross section of this plane taken along the support portion **101***a*, **101***b*, such as at the free end or tip of the support portion **101***a*, **101***b* may form a parabolic concave curve along at least a portion of the length of the support portion **101***a*, **101***b*. A combination of the attachment element **112** and the spacing element **116**, that together may form a screw arrangement, may hold the second frame element **103***a*, **103***b* in the deflected or stressed state when assembled with the first frame element **102**.

The spacing element **116** may be provided by a single screw that engages a thread in the frame **109** while its tip engages or abuts a surface on panel **1**. Alternatively, panel **1** comprises a threaded hole into which spacing element **116** is threaded so that spacing element **116** can be used to displace the frame **109** towards panel **11**. Additionally, element **116** may comprise a spacer component such as a washer, spacer, etc. In FIGS. **3***a* and **3***b* and FIG. **6***a*, two spacing elements **116***a*, **116***b* are shown for illustrative purposes and may form separate embodiments. A single-spacing element **116***a*, **116***b* may be used in other embodiments. The head of the spacing element **116***a*, **116***b* may abut the back cover **111** while the spacing element **116***a*, **116***b* may engage the frame **109**, wherein the frame **109** may be pulled towards the back cover **111**. As a result, the frame **109** becomes concave. In some embodiments, the spacing element **116***a* does not abut or engage the panel **1**, wherein the panel **1** may be unaffected by the force applied to the frame **109**. In other embodiments, the spacing element **116***b* is sufficiently long such that a tip of the spacing element **116***b* abuts a surface of the panel **1**. This adds further control of the shape of the plate **2**.

In some of the embodiments, the frame assembly **100** comprises a plurality of spacing elements **116** arranged spaced apart from corners of the frame **109**. One or several

spacing elements **116** may be arranged along each perimeter or side of the frame **109**. If a single spacing element **116** is arranged along each side, it is preferably centered between the corners of the frame **109**.

Each spacing element **116** may comprise a screw with a predefined length. This means that the screw can be fully seated such that the head and tip abut respective surfaces, whereby a predefined curvature of the plate **2** is obtained. The level of curvature may be adjusted by one or several spacers arranged between the head and the surface which the head engages. This is particularly useful if multiple spacing elements **116** are arranged along a single side, or if different sides have different lengths. The more spacers provided, the less force will be applied to the frame **109**. Alternatively, as shown in FIG. **5***h*, predefined height differences may be generated via other methods, e.g. by milling the frame to the predefined heights, allowing a more continuous support structure.

FIGS. **5***a*-**5***h* illustrate embodiments of an assembly **200**, which may be combined with the first frame element **102** described above. The embodiments shown in FIGS. **5***a*-**5***h* are shown inverted relative to the embodiments shown previously, with the plate **2** at the top.

As shown in FIGS. **5***a* and **5***b*, the frame assembly **200** may comprise a first frame element **202**, and a second frame element **203**. The first frame element **202** and the second frame element **203** may be elongated members, each having a support portion **201***a*, **201***b*. The first frame element **202** and the second frame element **203** may e.g. be L-shaped in cross section. A first portion of each of the first frame element **202** and the second frame element **203** may be configured to extend along the edge of the panel **1**. A second portion of each of the first frame element **202** and the second element **203** forms the support portion **201***a*, **201***b*, and may be configured to extend from the perimeter of the plate **2** a short distance, such as a 1-3 cm, over the surface of the plate **2** when assembled. Furthermore, the second frame element **203** may be arranged on top of the first frame element **202** and such that the perimeter of the plate **2** is arranged between the second portion of each of the frame elements **202**, **203** when assembled. Therefore, each support portion **201***a*, **201***b* may support or engage opposing surfaces of the plate **2**, such as is illustrated in FIG. **5***g*.

In some embodiments, such as illustrated in FIGS. **5***c*-**5***d*, a gasket **205** (e.g. gaskets **205***a*, **205***b*, **205***c*, **205***d*, **205***e*) is arranged between the first frame element **202** and the second frame element **203**. The gasket may e.g. be arranged on the support portion **201***a* of the first frame element **202**. Also, a sealing **204***a* may be arranged on the support portion **201***b* of the second frame element **203**.

The gasket **205** may have a varying thickness along its length, i.e. also along the length of the first frame element **202**. This provides for obtaining a desired curved shape of the perimeter of the plate **2** when captured between the first frame element **202** and the second frame element **203**, as is illustrated in FIGS. **5***f*-**5***g*. For example, the gasket **205** has opposing ends and may be thinner between the opposing ends than at said ends. This provides for obtaining a predefined concavity of the perimeter of the plate **2**. The gasket is sufficiently stiff that it is thicker at the ends even when compressed. The gasket **205** may be about 1.5-2.0 mm at the ends and about 1 mm thinner at the center.

In some embodiments, the gasket **205** has a plurality of sections along its length. The thickness of each section may vary. For example, a first section **205***a* of the gasket is provided at one of its ends and a second section **205***b* of the gasket at the other of its ends. The first section **205***a* and the second section **205***b* may have a first thickness that may be equal at each section. At least a third section **205***c* of the gasket is arranged between the first section **205***a* and the second section **205***b*. The third section **205***c* has a second thickness. The first thickness is thicker than the second thickness. For example, difference in thickness is about 0.5-2 mm, preferably about 1.0 mm. The difference in thickness may vary depending on the length of the gasket **205** and the edge of the plate **2** at which the concavity is to be introduced. In some embodiments, fourth and fifth sections **205***d*, **205***e* may be provided between the first and second sections **205***a*, **205***b* and the third section **205***c*, respectively. The fourth and fifth sections **205***d*, **205***e* may add further control of the shape of the concave curve provided by the arrangement **200**. The length of each the first and second sections **205***a*, **205***b* may be about 2-20% of the total length of the gasket **205**. The length of the third section may be about 60-96% of the total length of the gasket **205**. The length of each of the fourth and fifth sections **205***d*, **205***e* may be about 10-20% of the total length of the gasket **205**. In some embodiments the total length of the fourth and fifth sections **205***d*, **205***e* is shorter than the length of the third section **205***c*, and the total length of the first and second sections **205***a*, **205***a* is shorter than total length of the fourth and fifth sections **205***d*, **205***e*. This provides for a parabolic concave curve along the length of the frame assembly **200**.

A distance between the support portion **201***a* of the first frame element **202** and the support portion **201***b* of the second frame element **203** may be discontinuous in an assembled state, as can be seen in FIG. **5***e*.

In order to maintain the concavity of the plate **2**, the first frame element **202** and the second frame element **203** may be held together such that the distance between the support portions **201***a*, **201***b* is maintained in the assembled state. The first frame element **202** has a first hole **217***a* and a second hole **217***b* arranged at opposing ends of the first frame element **202**, such as at the second portion of the first frame element **202**. The first and the second hole **217***a*, **217***b* are arranged in a first plane. A third hole **217***c* is arranged between the first hole **217***a* and the second hole, such as centered between the first hole **217***a* and the second hole **217***b*. The third hole **217***c* is provided in a plane that is different from the first plane. The distance or offset between the plane in which the first and second holes **217***a*, **217***b* are arranged and the plane in which the third hole **217***c* is arranged may be substantially the same as the difference in thickness between the first and second sections **205***a*, **205***b* and the third section **205***c*, i.e. about 0.5-2 mm. In some embodiments the first and second holes **217***a*, **217***b* are centered in each of the first and second sections **205***a*, **205***b* of the gasket **205** along the length of the first frame element **202**.

Similarly, the second frame element **203** may comprise a first hole **218***a* and a second hole **218***b* arranged at opposing ends of the second frame element **203**. A third hole **218***c* may be arranged between the first hole **218***a* and the second hole **218***b* of the second frame element **203**. The first hole **218***a*, the second hole **218***b*, and the third hole **218***c* of the second frame element **203** is generally arranged in the same plane when the second frame element **203** is disconnected from the first frame element **202**. The second frame element **203** may be less stiff or weaker than the first frame element **202** and be deflectable such that each hole **218***a*, **218***b*, **218***c* of the second frame element **203** is aligned with the holes **217***a*, **217***b*, **217***c* of first frame element **202**. Therefore, the support portion **201***b* of the second frame element **203** may be deflected such that it extends in plane, which is curved in

the assembled state of the frame assembly **200**. Screws **219***a*, **219***b*, **219***c* may be inserted through the aligned holes **217***a*, **217***b*, **217***c*; **218***a*, **218***b*, **218***c* and may directly engage the panel or engage a threaded hole in the panel **1**, which will hold the frame elements **202**, **203** in the assembled state. Other relative arrangements of the holes **217***a*, **217***b*, **217***c*; **218***a*, **218***h*, **218***c* are foreseen, wherein the center holes **217***c*, **218***c* of each frame element **202**, **203** are misaligned in the relaxed state of the second frame element **203** but aligned in the deflected or stressed state of the second frame element **203**.

In some embodiments, the first frame element **202** forms a frame side, and the second frame element **203** forms an edge cover. If used together with the frame **109** discussed with regard to FIGS. **4***a*-**4***c*, the frame side may replace the second frame element of the embodiments of FIGS. **4***a*-**4***c*. Therefore, the frame side comprises the support portion **201***a* with a support surface generally opposing the frame **109** and is configured to support the gasket **205**.

As illustrated in FIG. **6**, a component (e.g. a sealing component **204***a*) may be provided between the support portion **201***a* and the plate **2**. FIG. **6** illustrates the resulting forces and torque generated when a force **220** is applied to second frame element **203***a*. A second force **221** is applied to support portion **201**. Therefore, a net torque **222** is generated, i.e. counter-clockwise in the illustrated arrangement. The plate **2** will assume a curved path, as is illustrated with dotted line **223**.

In an embodiment shown in FIG. **7**, an alternative arrangement is provided for providing curvature of plate **2**. In this embodiment, support block **301** is arranged to support glass plate **2**. Support block **301** has a surface portion comprising a tapered edge **303** at an angle from second frame element **103**A, Plate **2** is pressed against the top surface of support block **301** from pressure **201***b* from first frame element **102** and sealing **204***a*. Pressure **201***b* causes plate **2** to follow the contour of the top surface of block **301** and plate **2** is forced into a curving plane at an angle to the plane of second frame element **103**A. The resulting path of plate **2** is shown by curvature path **310**. Tapered surface portion **303** is angled between 0.5 degrees and 3 degrees from second frame element **103**A.

In an embodiment shown in FIG. **8**, a variation of the embodiment shown in FIGS. **5***a*-**5***g* is provided. In this embodiment, second frame element **203** has been modified, such that a portion **410** has been removed from the edge portion **203***c* of second frame element **203**. This reduces the force required to bend second frame element **203** in a manner that results in a curvature of plate **2**. Portion **410** may be removed by a milling process, by a carving or cutting process, or second frame element **203** may be formed without portion **410** via a molding process or similar. Portion **410** preferably reduces the depth of second frame element **203** at the narrowest point by between 5-20%.

The frame elements of the embodiments of the assembly may be made from sheet metal and given a desired design, thickness, and/or be made from different materials such that the forces, shapes, torques, etc. discussed above are obtained.

Embodiments comprise a method for assembling the panel **1** and the plate **2** for the optical touch sensitive system. The method may comprise providing the frame elements according to the embodiments presented herein. The method further comprises attaching the first frame element to the second frame element, supporting the plate at a support portion of the assembly, and attaching at least one of the first frame assembly and the second frame assembly to the panel such that the support portion extends in flat or curved plane. Also, the method comprises attaching the second frame element to the first frame element such that the support portion extends at least partially in a second plane generally opposite at least a portion of the first frame element and is spaced apart from the first plane. A curvature of the first frame element may be controlled with a spacing element attached to the first frame element and may thereby tilt the support portion to control a curvature of the plate.

FIG. **9** illustrates a top plan view of an example of a touch-sensitive apparatus **99**. Emitters **30***a* are distributed around the periphery of touch plate **10**, to propagating light across touch surface **20**. Detectors **30***b* are distributed around the periphery of touch surface **20**, to receive part of the propagating light. The light from each of emitters **30***a* will propagate to a number of different detectors **30***b* on a plurality of light paths **50**.

The embodiments above describe methods of achieving control of plate shape and curvature. The following embodiments describe desirable shapes of the plate for achieving improved performance of a touch sensor system. Light paths **50** may conceptually be represented as "detection lines" that extend across the touch surface **20** between pairs of emitters **30***a* and detectors **30***b*. The emitters **30***a* and detectors **30***b* collectively define a grid of detection lines **50** ("detection grid") on the touch surface **20**, as seen in a top plan view. The spacing of intersections in the detection grid define the spatial resolution of the touch-sensitive apparatus **99**, i.e. the smallest object that can be detected on the touch surface **20**. The width of the detection line is a function of the width of the emitters and corresponding detectors. A wide detector detecting light from a wide emitter provides a wide detection line with a broader surface coverage, minimizing the space in between detection lines which provide no touch coverage. A disadvantage of broad detection lines may be a reduced ability to differentiate between separate objects and a lower signal to noise ratio.

As used herein, the emitters **30***a* may be any type of device capable of emitting radiation in a desired wavelength range, for example a diode laser, a VCSEL (vertical-cavity surface-emitting laser), an LED (light-emitting diode), an incandescent lamp, a halogen lamp, etc. The emitters **30***a* may also be formed by the end of an optical fiber. The emitters **30***a* may generate light in any wavelength range. The following examples presume that the light is generated in the infrared (IR), i.e. at wavelengths above about 750 nm. Analogously, the detectors **30***b* may be any device capable of converting light (in the same wavelength range) into an electrical signal, such as a photo-detector, a CCD device, a CMOS device, etc.

The detectors **30***b* collectively provide an output signal, which is received and sampled by a signal processor **130**. The output signal contains a number of sub-signals, also denoted "projection signals", each representing the energy of light received by one of light detectors **30***b* from one of light emitters **30***a*. Depending on implementation, the signal processor **130** may need to process the output signal for separation of the individual projection signals. The projection signals represent the received energy, intensity or power of light received by the detectors **30***b* on the individual detection lines **50**. Whenever an object partially or completely occludes detection line **50**, the received energy on this detection line is decreased or "attenuated".

The signal processor **130** may be configured to process the projection signals so as to determine a property of the touching objects, such as a position (e.g. in a x, y coordinate system), a shape, or an area. This determination may involve

a straight-forward triangulation based on the attenuated detection lines, e.g. as disclosed in U.S. Pat. No. 7,432,893 and WO2010/015408, or a more advanced processing to recreate a distribution of attenuation values (for simplicity, referred to as an "attenuation pattern") across the touch surface **20**, where each attenuation value represents a local degree of light attenuation. The attenuation pattern may be further processed by the signal processor **130** or by a separate device (not shown) for determination of a position, shape or area of touching objects. The attenuation pattern may be generated e.g. by any available algorithm for image reconstruction based on projection signal values, including tomographic reconstruction methods such as Filtered Back Projection, FFT-based algorithms, ART (Algebraic Reconstruction Technique), SART (Simultaneous Algebraic Reconstruction Technique), etc. Alternatively, the attenuation pattern may be generated by adapting one or more basis functions and/or by statistical methods such as Bayesian inversion. Examples of such reconstruction functions designed for use in touch determination are found in WO2009/077962, WO2011/049511, WO2011/139213, WO2012/050510, and WO2013/062471, all of which are incorporated herein by reference.

In the illustrated example, the apparatus **99** also includes a controller **120** which is connected to selectively control the activation of the emitters **30***a* and, possibly, the readout of data from the detectors **30***b*. Depending on implementation, the emitters **30***a* and/or detectors **30***b* may be activated in sequence or concurrently, e.g. as disclosed in U.S. Pat. No. 8,581,884. The signal processor **130** and the controller **120** may be configured as separate units, or they may be incorporated in a single unit. One or both of the signal processor **130** and the controller **120** may be at least partially implemented by software executed by a processing unit **140**.

FIG. **10***a* illustrates a substantially flat rectangular touch plate **10** according to the prior art. In this example, the touch plate is made of glass, plastic, or any other materials such as PMMA (Poly(methyl methacrylate)). Two axes are defined in FIG. **10***a*. The x-axis is defined as the axis running parallel to and equidistant from the pair of long edges of the rectangle and along the flat surface of the touch surface. The y-axis is defined as the axis running parallel to and equidistant from the pair of short edges of the rectangle and along the flat surface of the touch surface. At least a portion of the top surface of touch plate **10** comprises touch surface **20**.

FIG. **10***b* illustrates an example of a touch apparatus according to the prior art. FIG. **10***b* shows the touch apparatus in cross section wherein the cross section runs along the x-axis of the plate **10**. Light is emitted by emitter **30***a*, passes through transmissive plate **10** through touch surface **20** and is reflected by reflector surface **80** of edge reflector **70** to travel in a plane substantially parallel with touch surface **20**. The light will then continue until deflected by reflector surface **80** of the edge reflector **70** at an opposing edge of the transmissive plate **10**, wherein the light will be deflected back down through transmissive plate **10** and onto detectors **30***b*. Where an object is applied to touch surface **20**, some of the light above the touch surface **20** is occluded. This occlusion is detected by the touch apparatus and used to determine the presence, size, and/or shape of the object. The emitters and detectors may be arranged in a number of other configurations such that the light from the emitters is delivered to the touch surface and delivered from the touch surface to the detectors. Other known arrangements are that of arranging the emitters and detectors above the touch surface and transmitting and receiving the light directly without the use of reflecting surfaces. The light may also be delivered to the touch surface by means of a wave guide, fiber optic cable, or other optical component.

FIG. **11***a* illustrates an embodiment of touch plate **10** similar to that shown in FIG. **10***a* but wherein the touch plate **10** is curved. In this embodiment, the plate remains substantially flat in the direction of the y-axis but is curved in a concave direction relative to the x-axis. In this embodiment, the x-axis is defined as the axis running parallel to and equidistant from the pair of long edges of the rectangle. The vertex of the parabola or paraboloid of the touch surface is where the touch surface is deepest relative to the edges of the touch plate. Where the x-axis is positioned at the height of the edge of the touch plate, the curvature of the plate can be measured using the distance of the touch surface from the x-axis. FIG. **11***b* shows a cross-section view along the x-axis of the touch plate **10** of FIG. **11***a*.

FIG. **11***c* shows an example embodiment of a curved touch plate **10**. The touch plate **10** has a width of 1900 mm along the x-axis and a height of 1070 mm along the y-axis. In this example embodiment, the glass is shaped such that the touch surface follows a parabolic curve relative to the x-axis. The midpoint O of touch surface **20** is the center of the touch surface and the midpoint of the x-axis. Where the curvature of the touch surface **20** is parabolic, the maximum distance a between the touch surface and the x-axis is at the center point O of the touch surface.

FIG. **11***d* shows the maximum allowed concave distance a and maximum allowed convexity b. The maximum allowed convexity b may be a significant consideration as a portion of the touch surface that is substantially convex may result in occlusion of the light between the emitters and detectors and significant loss of touch signal. The maximum allowed convexity b is a negative number in the present examples.

In one embodiment, the range of the distance a for vertically orientated touch plate is limited in order to improve the yield and performance of touch systems. The range is set dependent on the size of the touch system. A smallest value is needed to assure that non-parabolic deviations in the glass shape and convexity in the integration doesn't result in a convex integrated touch surface. A largest value is needed in order to assure that the height of the light field for the final touch system is kept reasonably low in order to enable better contact detection and lift-off detection for touch objects. Preferably, range of the distance a is 0-2.5 mm.

The maximum distance a is a positive number for a concave glass in the present examples. The curvature of the touch surface may therefore be modelled as:

$$F(x)=-a+cx^2$$

In the present example embodiment, a maximum distance a between the 1900 mm long cross section of the touch surface in FIG. **11***c* and the x-axis is 2.0 mm. Therefore, an ideal parabolic curve for touch surface **20** may be:

$$F(x)=5.5*10^{-6}*x^2-2.0$$

where F(x) is the distance between the x-axis and the touch surface at position x wherein F(x) is zero at the mid points of the edges. i.e. where the x-axis intersects the perimeter.

FIGS. **12***a* and **12***b* illustrates an embodiment of touch plate **10** similar to that shown in FIG. **11***a* but wherein the touch plate **10** is curved in two axes. FIG. **12***a* shows a top plan view and FIG. **12***b* shows an isometric view of touch plate **10**. In this embodiment, the plate is curved in a concave

direction relative to the x-axis and is also curved in a concave direction relative to the y-axis. As with the embodiment shown in FIG. **11***a*, the x-axis is defined as the axis running parallel to and equidistant from the pair of long edges of the rectangle and passing over the center point 0 on the touch surface. Therefore, the curvature of the plate can be measured from the distance of the touch surface from the x-axis. Similarly, the y-axis is defined as the axis running parallel to and equidistant from the pair of short edges of the rectangle and passing over the center point 0 on the touch surface. Therefore, the curvature of the plate along this axis can be measured from the distance of the touch surface from they-axis.

FIGS. **12***c* and **12***d* shows respective section views along the x-axis and y-axis of the touch plate **10** of FIGS. **12***a* and **12***b*. In an example embodiment of a curved touch plate **10**. The touch plate **10** has a width of 1900 mm along the x-axis and a height of 1070 mm along the y-axis. In this example embodiment, the glass is shaped such that the touch surface follows a parabolic curve relative to the x-axis. The center point O of touch surface **10** is the center of the touch surface and parallel with midpoint of the x-axis. Where the curvature of the touch surface **10** is parabolic, the maximum distance a between the touch surface and the x-axis is at the center point O. The maximum distance a is a positive number for a concave glass in the present examples. The curvature of the touch surface may therefore be modelled as:

$$z(x,y)=-a+b*x^2+c*x^2y^2+d*y^2$$

where z is the distance between the plane defined by the x-axis and y-axis and the touch surface, and x and y are co-ordinates in the plane of the glass.

In an example embodiment having a flat perimeter around the plate with a max distance of 2.0 mm measured along the x-direction for y=0 (i.e. middle of plate):

$$z(x,y)=-2+5.56e-06*x^2-4.74e-11*x^2y^2+1.7e-05*y^2$$

In another example embodiment having a concave perimeter around the plate with a max distance of 2.0 mm measured along the x-direction for y=0 (mid short to short of screen) and with a max distance of 1.5 mm measured along the y-direction for x=0 (mid long to long of screen). Where the top and bottom edges have 1.0 mm max distance and the left and right edges have 0.5 mm max distance:

$$z(x,y)=-2.5+5.56e-06*x^2-2.37e-11*x^2*y^2+1.28e-05*y^2$$

FIG. **13***a* shows a section view along the x-axis of light propagating across an example embodiment of a curved touch plate **10** touch surface having a curved profile in the x-axis. In the section view, the propagation paths of light from a point light source **1310** are shown. Dotted lines **1320** show propagation paths of light emitted from point light source **1310***a* that are not received by detector surface **1340**. Solid lines **1330** show propagation paths of light emitted form point light source **1310** that are received by detector surface **1340**. As shown in the figure, a portion of the light is lost above the detector, a portion is lost below the detector, and a portion of the light is received at the detector surface. A person looking from the emitter point towards the mirror image of the detector (mirrored in the touch surface) will perceive the detector size as 2.2 times larger than the real detector. This magnification effect is an effect of using an off axis parabolic mirror. In the specific case of touch systems, this results in a detection signal boost of a factor of 2.2, when comparing to a flat touch surface. This boost applies only to the signal and not significantly to the ambient light otherwise received by the detectors. In a preferred embodiment, the detectors and emitters of the touch system are 3 mm or less above the touch surface (either directly or indirectly) and the length of the detection lines being in the range from 100 to 2500 mm, the angle of incidence is extremely close to 90 degrees. With this, gracing incidence, dirt or anti-glare coatings on the touch surface have no practical impact of the reflection, so it is practically a mirror.

FIG. **13***b* provides a graph of the angle of the emitted light from the point light source **1310** with respect to the z-coordinate of the light path at the edge of the model of FIG. **13***a*. The detector surface z-coordinate range is shown by the vertical axis. Light emitted by point light source **1310** received at a z-coordinate within that range is received by the detector.

FIG. **14***a* shows a section view of the embodiment of FIG. **13***a*. In the section view, the propagation paths of light from a second point light source **1410** are shown. In this example, the detection signal boost is approximately 3.3. FIG. **14***b* shows the corresponding graph of FIG. **13***b* for the second point light source **1410**.

FIG. **15***a* shows a section view of the embodiment of FIG. **13***a*. In the section view, the propagation paths of light from a third point light source **1510** are shown. FIG. **15***b* shows the corresponding graph of FIG. **13***b* for the third point light source **1510**. In this example, the detection signal boost is approximately 3.03.

FIG. **16***a* shows a section view of the embodiment of FIG. **13***a*. In the section view, the propagation paths of light from a fourth point light source **1610** are shown. FIG. **16***b* shows the corresponding graph of FIG. **13***b* for the fourth point light source **1610**. In this example, the detection signal boost is approximately 2.71.

FIG. **17***a* shows a section view of the embodiment of FIG. **13***a*. In the section view, the propagation paths of light from a fifth point light source **1710** are shown. FIG. **17***b* shows the corresponding graph of FIG. **13***b* for the fifth point light source **1710**. In this example, the detection signal boost is approximately 2.19.

FIGS. **13***a*-**17***h* demonstrate that different emitter positions utilize different parts of the touch surface. The parts of the touch surface that work as reflectors will depend on the actual shape of the glass and the placement and sizes of the emitter and detector apertures surface **1340**.

However, the touch plate **10** cannot be manufactured, positioned, or held in shape perfectly. Consequently, a certain amount of deviation can be expected between the curve followed by the touch surface and an ideal parabolic curve.

FIG. **18***a* shows a graph of a mathematically defined parabolic curve and a real-world parabolic touch surface. In the example embodiment of FIG. **18***a*, a curved touch plate **10** has a width of 1900 mm along the x-axis and a height of 1070 mm along the y-axis (wherein the x-axis and y-axis are defined as in the embodiment shown in FIG. **12***a*,**4***b*). In this example embodiment, the glass is shaped such that the touch surface follows parabolic curve **1810** relative to the x-axis. The maximum distance a between the touch surface and the x-axis is 10 mm. The mathematically defined parabolic curve is defined as **1820**. The graph shows the deviation between the mathematically defined parabolic curve represented by dotted line **1820** and real touch surface **1810**. Here, the real touch surface is asymmetrically warped. FIG. **10***b* shows the short to short mid cross section of a 2180 mm diagonal, 16:9 ratio, thermally tempered glass that is just within or at the maximum limit of concave distance <6 mm as well as parabolic deviation |<0.5 mm.

The parabolic fit of the touch surface **1810** has an s-shaped residual. Such asymmetrical warping may be the result of problems with transport rollers or an uneven temperature distribution during the rapid cooling phase of tempering process during manufacture.

FIG. **18***b* shows a graph of the deviation between the mathematically defined parabolic curve and a real-world parabolic touch surface of FIG. **18***a*.

The following table defines a preferred set of restrictions on the shape of the touch surface in order to achieve an optimal touch surface shape. The term 'warp' defines the distance of the touch surface from the respective axis intersecting the center point O in the direction of the z-axis.

Glass size	Min x-axis warp (mm)	Max x-axis warp (mm)	Min y-axis warp (mm)	Max y-axis warp (mm)	Max convexity* (mm)	Max parabolic deviation (mm)
55"	1.0	3.50	0.0	1.35	0.1	0.5
65"	1.0	4.50	0.0	1.65	0.1	0.5
70"	1.0	5.10	0.0	1.85	0.1	0.5
75"	1.0	5.70	0.0	2.00	0.1	0.5
84"-86"	1.0	6.00	0.0	2.00	0.1	0.5

Convexity b is shown in FIG. **18***a*. Parabolic deviation is shown in FIG. **1.8***b*.

FIG. **19***a* shows another graph of a mathematically defined parabolic curve and a similar glass to that of FIG. **18***a* but wherein the glass of FIG. **19***a* is out of range and not recommended for touch system production. One reason for the large concavity shown in FIG. **19***a* may be that the tempering process has been run with too large differences between bottom and top cooling parameters in a quenching process during manufacturing. The mathematically defined parabolic curve is defined as **1920**. The graph shows the deviation between the mathematically defined parabolic curve and real touch surface **1910**.

FIG. **19***b* shows a graph of the deviation between the mathematically defined parabolic curve and a real-world parabolic touch surface of FIG. **19***a*. The real-world parabolic touch surface of FIG. **19***a* is an example of a symmetrical but higher order warping (e.g. W shaped). Such warping may significantly reduce signal boost and may be caused by symmetrical temperature problems (e.g. too hot in center or edge of glass) during the manufacturing tempering process.

FIG. **20***a* shows an embodiment in which the touch surface forms a paraboloid. In FIG. **20***a*, a top plan view of the touch surface is shown with contour lines showing the depth of the touch surface relative to a flat plane intersecting the four corners of the touch surface. The numbers shown on each contour represents the depth of the contour. The x-axis, y-axis, and diagonal-axis d are all shown. The x-axis is defined as an axis running parallel to and equidistant from the pair of long edges of the rectangle. The y-axis is defined as an axis running parallel to and equidistant from the pair of short edges of the rectangle. Diagonal-axis d is defined as an axis running diagonally from one corner to a diagonally opposite corner. In this embodiment, the x-axis, y-axis, and diagonal axis d of touch surface **10** each describe a parabola with respect to the depth of the touch surface. In FIG. **20***b*, diagonal-axis d is shown running from the bottom left corner to the top right corner. In the example embodiment of FIG. **20***a*, the curved touch plate **10** has a width of 1900 mm along the x-axis and a height of 1070 mm along the y-axis.

FIGS. **20***b*-**20***d* show optional parabola configurations for the embodiment shown in FIG. **20***a*. FIG. **20***b* shows a graph of the desired parabola of the touch surface underneath the x-axis and relative to the x-axis. The deviation (bottom axis) from the x-axis is shown relative to the position (left axis) along the x-axis. FIG. **20***c* shows a graph of the desired parabola of the touch surface underneath the y-axis and relative to the y-axis. The deviation (bottom axis) from the x-axis is shown relative to the position (left axis) along the y-axis. FIG. **20***d* shows a graph of the desired parabola of the touch surface underneath the diagonal-axis and relative to the diagonal-axis. The deviation (bottom axis) from the x-axis is shown relative to the position (left axis) along the diagonal-axis.

The embodiments shown in FIG. **20***a*-**20***d* describe a touch surface providing substantial signal boost for signals travelling between most emitters and detectors. However, the non-flat perimeter of the touch surface makes manufacture and assembly of such a system more complex.

FIG. **21***a* shows an embodiment in which the touch surface forms an alternative paraboloid to that of the embodiment shown in FIG. **20***a*. As with FIG. **20***a*, FIG. **21***a* provides a top plan view of the touch surface is shown with contour lines showing the depth of the touch surface relative to a flat plane intersecting the four edges of the touch surface **10**. The numbers shown on each contour represents the depth of the contour. X-axis, y-axis, and diagonal-axis d are all shown. The x-axis is defined as an axis running parallel to and equidistant from the pair of long edges of the rectangle. In this embodiment, the x-axis of touch surface **10** describes a parabola with respect to the depth of the touch surface. The y-axis is defined as an axis running parallel to and equidistant from the pair of short edges of the rectangle. In this embodiment, the y-axis of touch surface **10** also describes a parabola with respect to the depth of the touch surface. Diagonal-axis d is defined as an axis running diagonally from one corner to a diagonally opposite corner. In FIG. **21***b*, diagonal-axis d is shown running from the bottom left corner to the top right corner. In the example embodiment of FIG. **21***a*, the curved touch plate **10** has a width of 1900 mm along the x-axis and a height of 1070 mm along the y-axis. The perimeter of the touch surface of this embodiment is flat or close to flat. In embodiments where the perimeter of the touch surface is flat or close to flat, the surface beneath some detection lines will not be perfect parabolas. Even for an almost perfect integrated glass shape with a warp in the range of 1-2.5 mm some detection lines (a very small portion) will actually have less signal than for a flat glass. This small drawback is counter balanced by the significant overall signal improvements. Furthermore, touch systems where the perimeter of the touch surface is flat or close to flat can be easier to manufacture and assemble.

FIG. **21***b* shows a graph of the desired parabola of the touch surface underneath the x-axis and relative to the x-axis. The deviation (bottom axis) from the x-axis is shown relative to the position (left axis) along the x-axis. FIG. **21***c* shows a graph of the desired parabola of the touch surface underneath the y-axis and relative to the y-axis. The deviation (bottom axis) from the x-axis is shown relative to the position (left axis) along the y-axis. FIG. **21***d* shows a graph of the desired parabola of the touch surface underneath the diagonal-axis and relative to the diagonal-axis. The deviation (bottom axis) from the x-axis is shown relative to the position (left axis) along the diagonal-axis.

As will be apparent, the features and attributes of the specific embodiments disclosed above may be combined in different ways to form additional embodiments, all of which fall within the scope of the present disclosure.

Conditional language used herein, such as, among others, "can," "could," "might," "may," "e.g.," and the like, unless specifically stated otherwise, or otherwise understood within the context as used, is generally intended to convey that certain embodiments include, while other embodiments do not include, certain features, elements and/or states. Thus, such conditional language is not generally intended to imply that features, elements and/or states are in any way required for one or more embodiments or that one or more embodiments necessarily include logic for deciding, with or without author input or prompting, whether these features, elements and/or states are included or are to be performed in any particular embodiment.

The present invention has been described above with reference to specific embodiments. However, other embodiments than the above described are equally possible within the scope of the invention. Different method steps than those described above may be provided within the scope of the invention. The different features and steps of the invention may be combined in other combinations than those described. The scope of the invention is only limited by the appended patent claims.

What is claimed is:

1. A method for assembling a touch sensing apparatus, the touch sensing apparatus comprising a display panel, a plate including a touch surface, and a frame assembly,

wherein the frame assembly includes:

a first edge extending between a first end point and an opposite second end point; and

a second edge extending between the second end point and a third end point;

the method comprising:

configuring the frame assembly to support the display panel;

arranging a plurality of emitters adjacent to a periphery of the plate, said plurality of emitters configured to emit light to propagate over the touch surface;

arranging a plurality of detectors arranged adjacent to the periphery of the plate, said plurality of detectors configured to receive light from the set of emitters; and

configuring the frame assembly to support the plate;

wherein configuring the frame assembly to support the plate includes inducing a parabolic curvature in the touch surface relative to a first axis and relative to a second axis perpendicular to the first axis, said first axis is parallel to a line between the first end point and the second end point and said second axis is parallel to a line between the second end point and the third end point.

2. The method of claim **1**, wherein the first edge is curved and the second edge is curved.

3. The method of claim **1**, wherein the plate has a first curvature when not configured in the frame assembly, and wherein the plate has a second curvature greater than the first curvature after the plate is configured in the frame assembly.

4. The touch sensing apparatus of claim **3**, wherein the first curvature and second curvature are defined along an edge of the plate.

5. The touch sensing apparatus of claim **3**, wherein the first curvature and second curvature are measured along an axis passing through a center point of the plate.

6. The touch sensing apparatus of claim **3**, wherein the first curvature and second curvature are measured along a line passing through a point on the touch surface.

7. A touch sensing apparatus comprising:

a display panel;

a plate having a width, a length and a periphery, the plate further including a touch surface;

one or more emitters arranged adjacent to the periphery of the plate and configured to emit light across the touch surface of the plate;

a set of detectors arranged adjacent to the periphery of the plate and configured to receive light from the set of emitters, and

a frame assembly, the frame assembly comprising:

a first frame element configured to support the display panel; and

a second frame element arranged around at least a portion of the periphery of the plate, the second frame element having a first portion extending along an edge of the plate and a second portion opposed to the touch surface;

wherein the plate has a first curvature in the touch surface when not installed in the frame assembly, and wherein the plate has a second curvature along the width and along the length in the touch surface when the plate is installed in the frame assembly, said second curvature is parabolic; and

wherein the first curvature is concave.

8. The touch sensing apparatus of claim **7**, further comprising a processing element configured to determine, based on output signals of the set of detectors, a position of an object proximate to the touch surface.

9. The touch sensing apparatus of claim **7**, wherein the first curvature and second curvature are measured along an edge of the plate.

10. The touch sensing apparatus of claim **7**, wherein the first curvature and second curvature are measured along an axis passing through a center point of the plate.

11. The touch sensing apparatus of claim **7**, wherein the first curvature and second curvature are measured along a line passing through a point on the touch surface.

12. The touch sensing apparatus of claim **7**, further comprising a gasket, wherein the plate is supported by the gasket proximate to an edge of the plate.

13. The apparatus of claim **12**, wherein the gasket is configured to have varying thickness to match a curvature of the plate along the edge.

14. The apparatus of claim **7**, wherein the second frame element is curved.

* * * * *