The Applicant, John T. Pienkos, hereby claims small entity status.

John T. Pienkos

02228 U.S. PTO
070714

U.S. PTO
14/120873
07/07/2014

APPARATUS AND METHOD FOR PROVIDING PRODUCT LOCATION INFORMATION TO CUSTOMERS IN A STORE

CROSS-REFERENCE TO RELATED APPLICATION

This application claims the benefit of U.S. Provisional Application No. 60/158,444 filed October 9, 1999.

FIELD OF THE INVENTION

The present invention relates to an apparatus and method for providing product location information to customers (or employees or others) in stores and other retail centers.

BACKGROUND OF THE INVENTION

The number and variety of different products being sold in stores has increased and continues to increase at a rapid pace. This abundance of different products is a result not only of increased demand on the part of consumers and the development of more and more specialized products on the part of manufacturers, but also of the emergence of enormous warehouse-type stores in which retailers attempt to provide every imaginable product (within broadly-defined product areas) to consumers. Because of this huge increase in the number of available products being sold in an individual store, shopping has become a frustrating experience for many shoppers. Instead of being able to quickly find the products in the stores that they are interested in purchasing, shoppers often must seek the proverbial "needle in the haystack" when searching for

Home Depot
Ex. 1003 - Page 2

desired products or else must walk through every aisle of the store in order to guarantee that they are not missing the products that they desire.

Of course, modern stores typically do have a variety of displays or signs posted throughout the store that direct customers (at least in a general fashion) towards particular types of goods. Such signs are often hung from the ceilings of the stores or posted at the ends of aisles. However, in many cases such signs are not an adequate mechanism for providing customers with sufficient information to allow them to easily find the products for which they are searching. Not only are the signs sometimes difficult to read, but also the signs are limited in that only a small amount of information can be fit onto the signs.

Consequently, shoppers often resort to a common fallback—asking an employee of the store to direct them to the products they are looking for. Such behavior, while often allowing shoppers to find the desired products within a store, has significant disadvantages. First, store employees are not always able to provide clear instructions and, indeed, frequently do not themselves know where various products are located. As a result, shoppers who decide to ask store employees for directions often must ask more than one employee for such directions.

More importantly, a constant barrage of product location questions to employees from shoppers invariably detracts from the employees' productivity. Not only are the employees distracted from the work they are otherwise performing, but also answering questions can significantly detract from the time the employees actually are performing their work, particularly since the employees often physically walk with the shoppers to the location of the

products to help the shoppers find what they are looking for. Employees often must accompany the shoppers simply because the employees themselves are not exactly sure of the precise location of the products in question.

While both customers and many employees of a store often are not fully aware of the locations within the store of the various products being sold by the store, this is typically not because the information is not available. A store typically has one or more managers or other employees who are in charge of maintaining inventory within the store, and who consequently know the locations of most, if not all, of the products within the store. Moreover, many modern stores have a computerized or other information system that is utilized to keep track of the stores' inventory. Such inventory systems can keep track of, in addition to the types and brands of products being sold, the vendors of the products being sold, the prices for which the products are being bought and sold by the store, the number of each type of product that is remaining within the store and even the locations of the various products within the store.

U.S. Pat. No. 5,630,068 shows one system that has already been designed to assist customers and others in locating products within stores. According to this system, customers in a store are provided with relay units that are either mounted on shopping carts that the customers push around within the store, or simply carried around the store by the customers. The relay units are coupled to a central computer by way of light or radio frequency (RF) signals. When the customers begin shopping, they identify from a list those products that they are interested in purchasing. Upon finishing this entry of information, the customers are provided with graphical and other information indicating the location of the desired products within the store and, as

they progress through the store, are provided with prompts/reminders when they approach the locations of the products that were originally indicated.

Although this known system is capable of providing product location information to customers, the system has several drawbacks. The optical, RF and/or sensor equipment required by the system for allowing communication between the central computer and the relay units, for determining the positions of relay units, and for determining when the relay units are approaching the locations of products that have been selected by the customers, is complicated. Because the relay units are mobile, the relay units can be lost or damaged by customers. Indeed, relay units that are coupled to shopping carts can be damaged as a result of a variety of circumstances, including exposure to the elements when shopping carts are left outside of the store. For these reasons, the known system may be undesirably complicated and expensive.

From the above, it is apparent that it would be advantageous if stores had systems within the stores for providing product location information to customers (or employees or others). It would further be advantageous if these systems were easily accessed by customers and provided information in a rapid and convenient manner. It would be particularly advantageous if access were facilitated by employing a system with user interfaces that were conveniently accessible by customers from a number of locations within a given store.

It would also be particularly advantageous if access was facilitated by employing a system having user interfaces that made use of modern electronic interface technologies. At the same time, it would further be advantageous if the system utilized a simple array of

electronic technologies so that the system could be inexpensively installed within stores and was robust and easily maintained. It would be particularly advantageous if the system were interconnected with existing (or new or modified) computerized or other information systems within stores whereby existing inventory information could be easily obtained and relayed to customers.

SUMMARY OF THE INVENTION

The present invention relates to a system for providing product location information within a store. The system comprises a first user interface fixed within the store and an inventory information unit coupled to the first user interface. The first user interface is configured to receive an input signal from a user related to the identity of a product within the store, to process the input signal and to provide a product inquiry signal in response to the input signal. The first user interface is further configured to receive a location information signal, and to provide an output signal in response to the location information signal. The inventory information unit comprises a database containing product location information and is configured to provide the location information signal to the first user interface after receiving the product inquiry signal from the first user interface.

The present invention additionally relates to a system for providing product location information within a store, which includes an information unit and an input/output device. The information unit includes processing circuitry and a database containing product location information, and is configured to receive an input signal, to process the input signal, to obtain product

location information from the database in response to the processed input signal, and to provide an output signal indicative of information regarding product location. The input/output device is fixed at a location within the store, and is configured to receive a user input concerning a product location inquiry and to provide the input signal to the information unit in response to the user input. The input/output device is further configured to receive the output signal from the information unit and to communicate a user output in response to the output signal, where the user output is indicative of product location.

The present invention further relates to a system for providing product location information within a store that includes an input means, a signal processing means, a data storage means, and an output means. The input means is for receiving an input signal. The signal processing means is for processing the input signal to generate a product inquiry signal and is coupled to the input means. The data storage means is for storing product location information and providing a product location information signal to the signal processing means in response to the product inquiry signal. The data storage means is coupled to the signal processing means. The output means is for providing an output signal, and also is coupled to the signal processing means. The output means generates the output signal in response to a command signal from the signal processing means, which generates the command signal in response to the product location information signal.

The present invention additionally relates to a method of providing product location information within a store. The method comprises the step of affixing at least a first input device at a first location within the store. The method further comprises the steps of obtaining a

product location inquiry at the first input device, processing the product location inquiry at a signal processing device to determine a product location inquiry signal, and querying a database to obtain product location information in response to the product location inquiry signal. The method also comprises the steps of providing a product location information signal in response to the product location inquiry signal and providing an output signal at an output device, the output signal being a response to the product location inquiry.

BRIEF DESCRIPTION OF THE DRAWINGS

FIG. 1 shows a plan view of an exemplary store in which the invention is being utilized;

FIGS. 2a and 2b are front elevation views of two exemplary user interfaces at which persons desiring product location information may obtain such information;

FIG. 3 is a block diagram showing elements of a preferred embodiment of the invention that utilizes voice recognition and voice response technology to interface with persons desiring location information;

FIG. 4 is a block diagram showing elements of a second embodiment of the invention using an alternative communications technology to interface with persons desiring location information; and

FIG. 5 is a flow chart showing exemplary steps performed by the present invention.

DETAILED DESCRIPTION OF THE DRAWINGS

Referring to Figure 1, an exemplary store 100 is shown in which the present invention is deployed. As shown,

store 100 is a food store (e.g., "Pick 'n Save") with various specialty food centers, such as a bakery 102, a deli 104, a dairy section 106 and a frozen foods section 108. The store layout includes a number of different shelves 110, racks (not shown), aisles 112, refrigeration compartments 113, and check-out counters 118 and may include more than one room, such as a main shopping room 114 and an office 116. Items that may be purchased by consumers, or which may for some other reason be of interest to consumers, are at different locations within the store. While the store may be organized in order to facilitate customers' searches for desired items, customers still must look around and walk around the store to find various items.

While a food store 100 is shown, the present invention is applicable to all other types of stores that sell more than one item (or have more than one item of interest to customers) and have such items located in different positions within the store. For example, in addition to food stores, the present invention can be employed in a pharmacy/drug store (e.g., Walgreen's™), a home-improvement store (e.g., Home Depot™), an office merchandise store (e.g., Office Depot™), a department store (e.g., Marshall Field's™), and virtually all other stores.

Referring to FIG. 1, in a preferred embodiment multiple user interfaces 120 (specifically, user interfaces 120a-120f) are positioned at multiple locations within the store (in an alternate embodiment, a store would have only one such user interface positioned at one location). Each of user interfaces 120 is capable of receiving inquiries from customers (or employees or others) as to the location of various items within store 100. Also, each of user interfaces 120 is capable of providing information to

customers in response to receiving inquiries from the customers.

In the preferred embodiment, each of user interfaces 120 is capable of providing information regarding the location of any item of interest to customers within store 100 (as well as capable of indicating to customers that a particular item does not exist within the store if customers inquire as to the location of that item). In alternative embodiments, some (e.g., one or more) of user interfaces 120 are able to provide more information than some of the other user interfaces. Indeed, in certain alternative embodiments, one or more of user interfaces 120 are capable of providing completely different information than one or more of the other user interfaces.

As shown in FIG. 1, in the preferred embodiment, each of user interfaces 120 is connected to a central hub 130. User interfaces 120 can be, but need not be, coupled to one another as well as coupled individually to central hub 130. The exact connection matrix between user interfaces 120 and central hub 130 is not of significant concern. For example, some (or all) of user interfaces 120 can be connected to one another and to central hub 130 in serial fashion, as are user interfaces 120d-120f in FIG. 1. Alternatively (or in addition), some (or all) of user interfaces 120 can be connected in the form of a wheel with a hub and spokes, as are user interfaces 120a, 120b and 120d with respect to central hub 130 in FIG. 1. Coupling (as shown by a dashed line 140 in FIG. 1) of user interfaces 120 to central hub 130 and/or to one another is preferably by way of electrical wiring in order to be relatively inexpensive although, in alternate embodiments, the coupling can occur by way of wireless communications or some other communication mechanism.

Central hub 130 is, in the preferred embodiment, a central computer database (or other information source) in which information regarding the location of all or at least some of the items within store 100 (i.e., inventory location information) is stored. The product location information can include information as to where products are both placed or stored. In addition to this product location information stored in central hub 130 is a variety of types of additional information regarding products or other store features (e.g., information regarding the current stock of different items and prices of different items).

The location information (and any other information) within central hub 130 can be provided to the central hub in a variety of ways. In the preferred embodiment (and as shown in FIG. 1), the information is provided to central hub 130 from an overall inventory database 135 of the store, such as currently exist in many stores today, with which the central hub is configured (and programmed) to communicate. In an alternate embodiment, central hub 130 is the only database containing inventory information within the store, and is programmed with inventory information including product location information by store personnel (or by some other automatic system).

Operation of user interfaces 120 in relation to central hub 130 can take different forms according to different embodiments. In a first embodiment, each of user interfaces 120 is configured to send a signal to central hub 130 to access the database, upon receipt of an inquiry from a customer regarding the location of a particular item. Upon accessing the database, information is obtained regarding the location of that particular item and provided back to the respective user interface 120, which in turn

relays that information (or related information) to the inquiring customer.

The exact communications protocol between user interfaces 120 and central hub 130 can take the form of any of a number of standard communications protocols known to those skilled in the art. For example, in one embodiment a user interface 120 merely reports a request to central hub 130. Central hub 130 in turn receives the request, then (if it determines the request to be appropriate) performs a search of its database and finally, if relevant information is found, sends a message back to the respective user interface 120.

In a second embodiment, although each of user interfaces 120 is in communication with central hub 130, a given user interface does not need to access the central hub each time a customer makes a request. Rather, periodically all (or some) of the relevant location information within central hub 130 is downloaded into individual memories associated with each (or some) of user interfaces 120. Then, when a customer makes an inquiry at a particular user interface 120, the user interface accesses its own memory to obtain relevant information in response to the inquiry, instead of relaying the individual request to central hub 130 and obtaining relevant information in response to that request from the central hub.

This second embodiment is believed to be a preferred embodiment in relation to the first embodiment insofar as this second embodiment does not require effectively uninterrupted communications between user interfaces 120 and central hub 130 at all times and, further, does not place as great of a burden upon the potentially-limited processing capabilities of the central hub. At the same time, this second embodiment requires

greater memory storage capability on the part of each of user interfaces 120 to store the downloaded data from central hub 130.

Additional embodiments are also possible. For example, in certain embodiments, the user interfaces 120 are programmed by having one or more store employees (or other individuals) couple each user interface individually to central hub 130 only for the time necessary to download relevant information. In one embodiment, an employee can program the user interfaces 120 using a mobile device (not shown) that is carried around with the employee. The mobile device contains all of the relevant information and can be "plugged into" the different user interfaces 120, one by one, to download location information to the different user interfaces. The mobile device effectively functions as the "central hub" insofar as all product location information is transferred from it.

In further embodiments, some or all of user interfaces 120 are coupled only to certain other user interfaces such that, when one user interface is provided with information (e.g., when such user interface is connected to central hub 130 or to the mobile device discussed above), other user interfaces also receive that information. Indeed, in one embodiment, a user interface 120 is programmed to act as an "intermediate hub", such that location information is stored (or downloaded) onto that user interface but not others. In such a system, the other user interface(s) 120 that are connected to the intermediate hub user interface can request and obtain information from the intermediate hub in the same fashion as user interfaces would access central hub 130 in the first embodiment described above. (Referring to FIG. 1, for example, user

interface 120b could be programmed to act as an intermediate hub with respect to user interface 120c.)

Referring to FIGS. 2a and 2b, two physical embodiments of exemplary user interfaces 220a,220b are shown that are positionable at various, multiple locations in a store. User interface 220a shown in FIG. 2a has a user interface terminal 201 mounted upon a stand 202. Because user interface 220a is a stand-alone user interface, the user interface is positionable at various locations around the store, including at the ends of aisles, in between shelves, in the middle of aisles, at the front of the checkout counters, or along walls or at virtually any other position within the store. In contrast, user interface 220b shown in FIG. 2b is a user interface that consists merely of a user interface terminal 251. While user interface 220b is shown mounted on the end of a shelving structure (e.g., at the end of an aisle), the user interface can be mounted on walls, on other structures within or at the ends of aisles, at the front of checkout counters or at any of a variety of other convenient locations.

Preferably, user interface 220b is relatively thin so that the user interface does not protrude far off of the structure onto which the interface is mounted, and so that the user interface is not an obstruction to customers (and so that the user interface is not unaesthetic). In addition to exemplary user interfaces 220a,220b, the present invention also encompasses a wide variety of alternate embodiments of user interfaces that are capable of receiving inquiries from customers and providing information in return. Such alternate embodiments of user interfaces include user interfaces of a different shape or size (including interfaces that are much smaller), user interfaces that form a part of some other structure in which

the interfaces are embedded or integrated (e.g., a shelf), and user interfaces that have a different support mechanism (e.g., user interfaces suspended from the ceiling of the store).

The user interfaces also, in certain embodiments, are included within points of purchase displays, at which certain products are situated and/or promoted with advertisements. Insofar as the user interfaces are intended to be frequently accessed by customers, store owners are in some cases able to charge product manufacturers for the right to have their products situated next to, or in relatively close proximity to, the user interfaces. Indeed, in some cases, some of these product manufacturers are willing to subsidize the cost of installing the system of the present invention in exchange for the right to have their products specially situated near, or advertised by, the system.

Referring to FIG. 3, a block diagram showing elements of a preferred embodiment of the invention that utilizes voice recognition and voice response technology to interface with persons desiring location information is shown. The preferred embodiment includes a central hub 330 that is in communication with (at least from time to time) more than one user interface, one of which is shown as user interface 320, by way of an electrical communication link 340 (in an alternate embodiment, the central hub is only in communication with a single user interface). User interface 320 has a voice recognition and response unit 302 that receives voice input from a receiver 304.

A customer (or other person) can inquire about the location of a product by stating aloud the name of the product (or other similar characteristic information regarding the product) while the customer is in proximity to

user interface 320, such that receiver 304 receives the voice inquiry and provides a signal indicative of the vocal inquiry to voice recognition and response unit 302. Voice recognition unit 302 in turn processes the signal from the receiver to determine the word or words that were stated by the customer. Any one of a number of voice recognition programs or circuits or other mechanisms known to those skilled in the art may be employed in voice recognition and response unit 302 to perform this voice recognition function. Typically, voice recognition and response unit 302 will include at least one microprocessor and significant storage memory.

Upon determining the words of the stated inquiry, voice recognition and response unit 302 then provides a signal to central hub 330 requesting information regarding the location of products signified by those words. Central hub 330 receives this request and then searches a database 310 within the central hub for relevant location information. Upon finding relevant location information in database 310, central hub 330 transmits the information via communication link 340 back to voice recognition and response unit 302. Voice recognition and response unit 302 in turn determines a speech-synthesis signal to be applied to speaker 308 in order to verbally communicate the relevant location information to the customer. Again, voice recognition and response unit 302 can employ known circuitry or software, in this case primarily speech-synthesizing circuitry, to determine the proper signal that should be sent to speaker 308.

While ideally this embodiment of the invention would be capable of recognizing all voice inquiries, rapidly obtaining product location information regarding those inquiries, and rapidly responding in verbal fashion to all

of those inquiries, in practice this is sometimes not possible. For a variety of reasons, database 310 of central hub 330 sometimes does not have information regarding the location of a particular product. Not only may database 310 not be perfectly, accurately updated with all information concerning all products located within the store, but also voice recognition unit 302 may have difficulty in recognizing certain verbal requests (e.g., this may be the case where multiple products have highly-similar names). Further, customers may inquire about products that the store does not sell (e.g., a customer may inquire about bananas at Home Depot™).

In cases where voice recognition and response unit 302 is incapable of recognizing the words spoken by a customer, the voice recognition and response unit is configured to immediately (without sending a request signal to central hub 330) respond with a signal to speaker 308 indicating that the voice recognition and response unit does not recognize the requested product (e.g., the speaker states "I do not understand your request. Please restate your request"). Further, in cases where voice recognition and response unit 302 does recognize the requested words but, after providing the request signal to central hub 330, receives a signal from the central hub indicating that the central hub is unable to provide location information regarding the requested product, voice recognition and response unit 302 responds with a signal to speaker 308 indicating a similar message (e.g., "I do not have information regarding that product" or "Our store does not sell the product you requested").

In addition, while ideally user interface 320 is capable of determining that a customer is making an inquiry

whenever a customer is in fact doing so, in practice the environment of a store often is sufficiently noisy that, without additional control mechanisms or programming, the user interface inappropriately responds to noise that does not constitute actual product location inquiries (for example, when announcements are made over a loudspeaker in a store, the announcement message is interpreted by the user interface to be a customer inquiry). Therefore, in the preferred embodiment, the customer first notifies user interface 320 that an inquiry is about to be made before making the inquiry by pressing an input button 306, which then relays an inquiry imminent signal to voice recognition and response unit 302.

Upon receiving the inquiry imminent signal, voice recognition and response unit 302 (which normally is in a latent state) then enters an active state in which it is ready to receive signals from receiver 304. The voice recognition and response unit can be configured to remain in such an active state for a predetermined period of time and then to return to the latent state. Not only does this feature reduce the difficulty of programming (or hardwiring) voice recognition and response unit 302 to recognize when an actual inquiry is being made, but also this feature allows the voice recognition and response unit 302 to be programmed to provide, upon receipt of such an inquiry imminent signal, an output signal to speaker 308 causing the speaker to relay an instruction or acknowledgment message to the customer (e.g., the speaker states "Please state the name of the product that you wish to locate"). Notwithstanding these advantages, in alternate embodiments, this feature is unnecessary and no input button 306 need exist.

In addition to the above-described features, the preferred embodiment of the invention further includes one

or more additional elements and/or features to achieve greater responsiveness with respect to the customer and greater accuracy in providing relevant information to customers. For example, in the preferred embodiment, a wider array of more user-friendly interactive verbal messages are sounded by the speaker during times in which users are making inquiries. Also, during times when no customer inquiries are being made, the system can be configured to provide general information that is of interest to customers. For example, a particular user interface can be configured to provide general information regarding the type of items that are located in the aisle in which the user interface is located, or to alert customers to particular products that are on sale.

Further, when no information is found regarding a particular product, database 310 of the central hub 330 is configured to identify products that are similar in name with respect to the requested product (or are similar with respect to some other characteristic of the requested product) and to provide that information to voice recognition and response unit 302, which in turn causes speaker 308 to sound a voice message suggesting that the customer inquire about another product (e.g., "I do not have any location information regarding the product you requested. However, are you interested in the location of product X?", where product X is a product determined by the central hub to be similar to the originally-requested product). If particularly sophisticated, database 310 will have information regarding products that are related to a requested product even when the database does not have information regarding the location of the requested product.

Indeed, the present invention envisions many alternate embodiments in which the interactions between the

customer and user interface 320 take many, more complicated routes. For example, in certain embodiments, instead of merely recognizing product names stated by a customer, voice recognition and response unit 302 is sufficiently sophisticated to recognize diverse question types from a customer (e.g., the voice recognition and response unit is capable of responding to a customer inquiry concerning multiple products at once, such as "Where are the dairy products?" or "Where are cheese and crackers?"; or, the voice recognition and response unit is capable of responding to a customer inquiry regarding something other than the location of a product, e.g., "Where is the restroom?").

Also, the present invention envisions embodiments in which user interface 320 is capable of providing additional information (in addition to product location information) concerning products, such as price information or, if a product is not currently being sold, when the store will again be selling the particular product. All of this information can be provided, in such embodiments, from the same information source (e.g., database 310) as the product location information. To facilitate such more complicated interactions between user interface 320 and customers, these embodiments of the invention can include additional user input buttons in addition to input button 306, and also can include additional devices for providing information to customers (other than speaker 308), in verbal or non-verbal form.

Turning now to FIG. 4, an alternate embodiment of the present invention is shown in which simpler input-output devices (other than voice recognition and response unit 302 for providing voice-recognition and speech synthesis) are employed to receive product location inquiries from customers and to provide information back to customers in

response to their inquiries. Again, a user interface 420 is shown that is coupled by an electrical communication link 440 to a central hub (e.g., central hub 330), which typically is in turn coupled to at least one other user interface. In contrast to user interface 320 of the above-described preferred embodiment, user interface 420 includes a monitor 404 and a keyboard input 406 for respectively providing information to, and receiving inquiries from, customers.

Monitor 404 is a television screen, a liquid-crystal display or any other device for providing visual information to customers. Keyboard input 406 typically takes the form of a standard typewriter (QWERTY-type) keyboard, but in alternate embodiments has keys placed in another arrangement, or includes a greater number of or fewer keys than such a standard typewriter keyboard (other keyboards can have, for example, only a few alphanumeric, or merely numeric keys). In alternate embodiments, the respective output and input functioning of monitor 404 and keyboard input 406 are combined in a single unit, such as a touch screen display.

Monitor 404 and keyboard input 406 are coupled to, and are in communication with, a keyboard recognition and response unit 402. Keyboard recognition and response unit 402 in particular controls the output of monitor 404 and receives the signals from keyboard input 406 regarding customer inquiries. Keyboard recognition and response unit 402 is necessarily a less complicated device (or at least requires less complicated programming and less memory) than voice recognition and response unit 302 insofar as the keyboard recognition and response unit does not have to perform voice recognition or speech synthesis.

Home Depot
Ex. 1003 - Page 21

Indeed, keyboard recognition and response unit 402 in certain embodiments simply operates to forward information from customers (input at keyboard input 406) to central hub 330 and also to control monitor 404 to display information received back from central hub 330. Typically, however, keyboard recognition and response unit 402 performs more complicated functionality (and requires more circuitry, memory or programming to perform this functionality), such as filtering out inappropriate requests from customers, correcting for spelling errors, or facilitating more complicated interactions with customers such as those described above with respect to user interface 320.

User interface 420 is not limited to monitor 404 and keyboard input 406 for allowing input and output between the user interface and customers, and can further include additional devices to facilitate interaction with customers (for example, in one embodiment, "happy" musical tones are output via a speaker signifying whether product location information has been found in response to a customer's inquiry). Additionally, the present invention envisions hybrid user interfaces comprising components of the various embodiments already described. For example, in one embodiment, a user interface that is capable of speech synthesis, but not capable of voice recognition, is employed; such a user interface has a keyboard input in place of receiver 304. Finally, more than one type of user interface can be used in conjunction with one another and/or be coupled to the same central hub (e.g., FIG. 3 could be modified to include user interface 420 of FIG. 4).

Also envisioned within the present invention are embodiments having the alternate configurations described above with respect to FIG. 1. For example, in contrast to FIG. 3, which shows a "hub and spokes" configuration with

respect to the interconnection of central hub 330 and the multiple user interfaces (such as user interface 320 or user interface 420), each of the various user interfaces can instead be coupled serially to one another by communication link 340, which then at only one connection point couples those user interfaces to central hub 330. Also, instead of employing electrical communication link 340 to couple the various user interfaces and central hub, alternate devices can be utilized to allow communication (e.g., wireless communications).

Further, most communication with central hub 330 is eliminated in certain embodiments where one or more of the user interfaces are configured to be able to store and provide product location information (or other relevant information). Such user interfaces include additional memory and/or processing devices/capabilities in addition to (or within), for example, voice recognition and response unit 302 or keyboard recognition and response unit 402. In such embodiments, the user interface programmed with the product location information effectively becomes both a user interface and a central hub. In place of electrical communication link 340 coupling the user interfaces to central hub 330, another communication link (electrical or otherwise) is utilized to couple the user interfaces merely to one another. As stated above, a communication link 340 is dispensed with altogether if the user interfaces are programmed with all necessary product location information (and other relevant information) by a mobile programming device.

As discussed, certain embodiments of the present invention include one or more user interfaces (intermediary or otherwise) that perform database-related and other operations discussed above as being operations of the

central hub. However, further envisioned within the present invention are embodiments where the central hub (or an intermediary user interface) is capable of performing some or all of the operations ascribed above to the user interfaces (particularly to the voice recognition and response unit and the keyboard recognition and response unit). For example, in certain embodiments of the present invention, voice recognition, speech synthesis, keyboard recognition and other processing operations (which in other embodiments are performed at user interfaces) are performed by the central hub.

In such embodiments, signals from receivers or keyboards, or to speakers or monitors, are transmitted directly to and from the central hub without any (or significant) signal processing at the user interfaces. For example, in one embodiment in which the user interfaces have only microphones (for receiving customer inputs) and television monitors or LCD screens (for outputting information to the customers), the only signal processing that occurs at the use interfaces themselves is the purely electromechanical conversion process performed by the receivers/microphones in converting voice signals to electrical signals for transmission to the central hub, and the electronic conversion process of converting the signals from the central hub into signals appropriate for controlling the monitors or LCD screens.

Referring to FIG. 5, exemplary operational steps for the present invention are shown in a flow chart. In step 501, an indication is received at the system from a customer which signifies that the customer desires to make a product location inquiry. In the preferred embodiment, this indication is received when the customer presses an input button (such as input button 306). However, a customer can

also provide such an indication by providing a different signal via the same or a different device, and in certain embodiments performance of this step is not necessary at all.

In step 502, a product location inquiry from the customer is received by the system. The inquiry is received at a receiver, such as receiver 304, a keyboard input such as keyboard input 406, or at a different device such as a touch screen. A very simple inquiry may merely indicate an identity of a product for which the customer wishes to determine the location (e.g., the customer states "Cereal"). More complicated inquiries can include an indication that it is the location of the product that is desired (e.g., the customer inquires "Where is cereal?"). Additionally, other types of inquiries can also be made (regarding desired information other than product location) in more sophisticated embodiments of the invention. At step 503, the product location inquiry from the customer is processed by the system. In the preferred embodiment, involving voice recognition and response unit 302, such processing is involved, since voice-recognition processes must be applied to the signals from receiver 304.

In alternate embodiments, however, the processing is almost nonexistent. For example, in an embodiment having keyboard recognition and response unit 402, signals received from keyboard input 406 are merely converted into signals that can be sent directly to central hub 330 over communication link 440. In any event, all embodiments of the invention will require at least some minimal processing of customer inquiries, at least to insure that those inquiries were made in a format acceptable to the system and in a format capable of being communicated to the database

(or other memory in which product location information is stored).

Next, at step 504, the processed product location inquiry is communicated to the database. Although in the preferred embodiment, this communication occurs by way of electrical communication link 340 between user interface 320 and central hub 330, the communication can occur in other ways as discussed above. For example, in certain alternate embodiments, the communication occurs solely internally within a single user interface (or even within a single microprocessor or other element of that user interface) when the product location information is stored within the user interface itself. Further, in additional alternate embodiments, the communication occurs between one user interface and a second (i.e., intermediate hub) user interface that has product location information, or within the central hub itself, if the central hub is configured to perform the processing of the product location inquiry of step 503.

In step 505, the database is checked for relevant information in response to the product location inquiry. In certain embodiments, the database is checked for other information (e.g., price information) as well. Methods for searching for information stored in such databases is well known in the art. At step 506, relevant information found from the database is provided back to an output control device. The output control device is in certain embodiments the same device that processes the product location information in step 503 (e.g., voice recognition and response unit 302). However, the output control device in alternate embodiments is separate from the device that processes the product location information.

The output control device in certain embodiments performs additional processing of the information signal from the database before that information is output to the customer. For example, in the preferred embodiment, voice recognition and response unit 302 converts the information signal into a voice-synthesized signal that produces voice sounds when provided to speaker 308. Finally, in step 507 the relevant information (and possibly additional information provided from the output control device) is output to the customer. The output is provided by way of speaker 308, monitor 404 or any one of a number of other types of output or input/output devices.

As described above, the present invention envisions multiple alternate embodiments that are capable of performing further steps in addition to those of FIG. 5 (or only some of those steps). For example, upon receipt and processing of a product location inquiry from a customer as in steps 501 and 502, the system in one embodiment performs additional interactive steps to obtain or provide further information or clarification regarding a product location inquiry vis-a-vis the customer before or while the system communicates an inquiry to the database. Also, in certain embodiments, the system not only provides information indicative of the locations of products in response to the inquiries of the customer, but also provides information as to how the customer can most effectively travel to those products within the store (e.g., provides directions as to how to get to a particular aisle).

In some embodiments, some or all of the information provided by the system is not only stated or displayed to a customer at a user interface, but also is printed out by a printer associated with the user interface. When an individual customer has made multiple inquiries, the

information printed out for, or otherwise provided to, the customer is organized so that the customer can most efficiently travel to each of the desired product locations in as little time as possible. For example, the products and their respective locations are listed in order of closest proximity to the user interface. In certain embodiments, a map or the store (or a portion of the store) is printed out for the customer so that the customer is graphically informed of the location of the one or more products about which the customer has inquired. In one embodiment, the map has numbers on it at each of the locations of the desired products, where the numbers signify the order in which the customer should travel to the different locations.

The precise steps for controlling the input/output devices (or user interfaces), addressing and communicating with the database, and for processing information also vary significantly in different embodiments. For example, while the embodiment discussed above is capable of handling only one customer request at a particular user interface at a given time (although multiple customer requests can be handled simultaneously if the requests are made at multiple user interfaces), in certain embodiments, the system is capable of handling two or more inquiries at any given time at a single user interface. In one such embodiment, the system is capable of communicating a first product location inquiry to the database and simultaneously providing, in response to a second product location inquiry, a preliminary response to the customer without accessing the database. Also, in certain embodiments, the inquiries from the customer (and addressed by the system) extend beyond product location information.

The present invention is further meant to include further operations, and structures capable of performing those operations, that build upon the above-described features. For example, in further embodiments, the product location inquiries input by customers to the above-described system are stored and processed (i.e., tabulated and examined) to obtain information regarding customer preferences. The storage and processing of this information can be performed at the central hub or a user interface or at any of the other circuitry described above (or at additional circuits). By utilizing such information, stores can obtain useful information indicative of customer preferences or indicative of the relative difficulty customers are having in locating particular products within the stores. Such information can be used by store managers to identify fast-selling products or to determine whether the arrangement of products within the stores should be altered to better accommodate the needs of customers.

Further, the differences between the number of product location inquiries concerning certain products, and the number of those products actually sold by the store (which information is already typically monitored), can be calculated. Such information can be indicative of, for example, how customers' preferences change while the customers are within the store or how the preferences change once the customers learn of the prices of various products. Additionally, in particularly sophisticated embodiments of the present invention, customer typologies can be identified such that, upon receiving a particular set of product location inquiries from a given customer, the invention will automatically identify a customer profile and provide suggestions or information to the customer suited to that customer profile.

In additional embodiments, customer product location inquiry information is stored along with data concerning the identity of the individual customer himself, so that operation of the invention is tailored to the needs of the individual customer. By storing and monitoring the product location inquiry information, information regarding a particular customer's preferences can be obtained so that suggestions to the customer can be made (via a user interface) to that customer upon the customer's repeated visits to the store.

Further, in particularly sophisticated embodiments, an individual customer's standard purchases are already known (e.g., stored within the central database) when the customer enters the store. This information can be obtained based upon the customer's inquiries and purchases during earlier visits, or other actions by the customer, including survey responses, internet purchasing, etc. Thus, when the customer arrives and identifies himself to a user interface (e.g., by stating the customer's name to voice recognition and response unit 302), the user interface reminds or informs the customer of the location of certain items that are known to be of interest to the customer, or provides the customer with other information tailored to the needs of the customer. Further upon receiving customer identification, the system can provide signals to the store management (or to other devices) to provide specialized services to the customer (e.g., informing the customer of special sales going on at the store, or providing a handicapped customer with special assistance in shopping).

Further embodiments of the invention that include additional capabilities tailored to the needs of the individual customer are possible through the use of hand-held or otherwise mobile (preferably wireless) devices.

Such devices can include, for example, telephone or walkie-talkie type units, headphones, specialized eyeware, etc. Upon entry of a customer into a store, the customer is provided with one of the user interfaces. After the customer provides identification to the user interface, the user interface begins to provide the customer with information regarding the locations of the customer's standard items of purchase (and any other items that are likely to be of interest to the customer).

In certain embodiments, the hand-held or otherwise mobile user interface is able to determine its own position within the store, using global positioning (GPS) or other position-sensing capabilities. Then, the user interface is able to provide directions to the customer as to how to travel to the customer's desired products within the store (as opposed to merely informing the customer of where the products should be located, by indicating an aisle, etc.). Such directions can be provided on a visual display on the user interface (e.g., showing a map of the store, showing the present position of the customer, and showing how to travel to desired products or to other desired destinations, using arrows or via other indications on the map). Instruction also can be provided verbally through voice response technology as discussed.

Alternately, assuming the customer desires to determine his own path through the store (e.g., the customer wishes to travel down each aisle of the store sequentially), the user interface can notify the customer each time the customer is about to pass an item of interest within the store. In one embodiment, an indication such as a light turns on in an aisle of a store as the user interface passes an item of interest.

The information provided to the customer in various embodiments can include not only product location information but also price information regarding products of interest, the total price of all products already selected by the customer (or a predicted total price of all products typically selected by the customer for purchase), or suggested alternate ways of obtaining desired products that are currently not available at the store (or letting the customer know when desired products will be available). For stores that are part of a larger network or franchise of outlets at different locations (e.g., Walgreen's) information regarding individual customers (or customer profiles or customers' behavior generally) can be shared among the different stores so that customers continue to receive individualized or other specialized treatment at each of the different stores within the network of stores (in certain embodiments, a particular central database can be shared among multiple stores).

Additionally, the present invention is configurable for providing information to customers that assists in the promotion of particular products. For example, in the absence of customer inquiries, the user interfaces can provide information regarding products that are being specially promoted, or products that are located close by to the user interfaces. If the user interfaces are included within the point of purchase displays, the user interfaces can be configured to attract the attention of customers who are passing the point of purchase displays. For example, user interfaces with speakers can announce to passing customers that "Product X is on sale—two for one dollar." User interfaces at the ends of particular store aisles can announce special products that are located within those aisles.

In addition, in response to particular customer inquiries, the system is configurable to provide additional advertising or promotion information in addition to the location information requested by the customer. For example, the system, in response to an inquiry regarding the location of product Y, can respond by stating "Product Y is located in aisle 3. Product Z, which is on sale, is also located in aisle 3." Because of the many ways in which the system can be employed to promote or advertise different products, especially since the user interfaces are typically located in central or easily-accessed locations within the stores which are highly-frequented by customers, it is envisioned that store owners will be able to develop special arrangements with product manufacturers in which the product manufacturers will pay store owners to configure the system to promote products of the product manufacturers. Indeed, in certain circumstances, product manufacturers may wish to pay for the installation of the system within stores so that the system will promote their products.

While only a few exemplary embodiments of this invention have been discussed above, persons skilled in the art will recognize that many changes, substitutions and modifications (including omissions) are possible in these embodiments without materially departing from the novel features and advantages of this invention. It should be clear from the above discussion that the invention is capable of being employed in many different store-related environments, is capable of providing a variety of different types of information, and is further capable of having many different types of hardware and software configurations (including different types of interface devices and information-providing devices). Although suited for assisting customers, the invention can be used by others

(e.g., store employees) who desire store-related information. The exact structure, design and operation of the invention can vary so long as the invention continues to accomplish the same functions.

In particular, the present invention is meant to encompass a variety of different systems and devices that are capable of receiving inquiries from store customers at one or more convenient locations, obtaining information in response to those inquiries from a centralized information source (or a limited number of such sources), and providing the information back to those store customers. By providing information from a centralized source, repeated interaction of store customers with other human beings (e.g., store employees) is reduced to a minimum (for example, only one store employee may be required to program the centralized information source with data that is then accessible repeatedly by many customers). Accordingly, all such changes, substitutions and modifications (including omissions) are intended to be included within the scope of the invention as defined in the following claims. Other changes, substitutions, and modifications (including omissions) may be made in the design, operation (and operating conditions) and arrangement of preferred and other embodiments without departing from the spirit of the invention as expressed in the following claims.

WHAT IS CLAIMED IS:

1. A system for providing product location information within a store, the system comprising:

a first user interface fixed within the store, the first user interface configured to receive an input signal from a user related to the identity of a product within the store, to process the input signal and to provide a product inquiry signal in response to the input signal, the first user interface further configured to receive a location information signal, and to provide an output signal in response to the location information signal, and

an inventory information unit coupled to the first user interface and comprising a database containing product location information, the inventory information system configured to provide the location information signal to the first user interface after receiving the product inquiry signal from the first user interface.

2. The system of claim 1, wherein the first user interface includes

a receiver configured to receive the input signal, the input signal being a voice signal,

a speaker configured to provide the output signal, the output signal being a synthesized voice signal, and

a voice recognition and response unit configured to process a receiver signal indicative of the input signal and configured to provide a speaker signal from which the speaker generates the synthesized voice signal.

3. The system of claim 1, wherein the voice recognition and response unit includes a microprocessor

programmed with voice recognition and voice synthesization software.

4. The system of claim 1, wherein the first user interface is at least one of a stand-alone device and a device configured to be mounted on a structure within the store, and wherein the first user interface is configured to be at least one of fixed at an end of an aisle of the store, fixed near a middle of an aisle of the store, fixed within a point of purchase display of the store, fixed on a wall of the store, embedded within a shelving structure of the store, fixed near a checkout counter of the store, and suspended from a ceiling of the store.

5. The system of claim 1, wherein the first user interface is configured to provide at least one additional output signal that includes at least one of advertising information, promotional information, information regarding a lack of availability of the product at the store, information regarding an availability of the product at a second store, and information regarding an alternative product.

6. The system of claim 1, further comprising an input button, wherein the first user interface is configured to receive the input signal from the user only for a predetermined period of time after the input button has been triggered.

7. The system of claim 1, wherein the database of the inventory information unit is programmed with the product location information by downloading the product location

information from an overall store information unit that is coupled to the inventory information unit.

8. The system of claim 1, wherein the first user interface includes

a keyboard entry device configured to receive the input signal, the input signal being a keying-in action,

a visual display unit configured to provide the output signal, the output signal being a visual output, and

a keyboard recognition and response unit configured to process a keyboard signal indicative of the input signal and configured to provide a video signal from which the visual display unit generates the visual output.

9. The system of claim 8, wherein the keyboard entry device and the visual display unit form a single touch screen input device, and wherein the user interface further includes a printer which is configured to print out at least one of listings and maps.

10. The system of claim 1, further comprising a second user interface, the second user interface being coupled to the inventory information unit.

11. The system of claim 1, further comprising a second user interface, the second user interface being coupled to the first user interface that is coupled to the inventory information unit.

12. The system of claim 11, wherein at least one of: the first user interface acts as an intermediate hub and only intermittently communicates with the inventory

information unit; and the second user interface comprises the inventory information unit.

13. A system for providing product location information within a store, the system comprising:

an information unit including processing circuitry and a database containing product location information, the information unit configured to receive an input signal, to process the input signal, to obtain product location information from the database in response to the processed input signal, and to provide an output signal indicative of information regarding product location; and

an input/output device that is fixed at a location within the store, the input/output device configured to receive a user input concerning a product location inquiry and to provide the input signal to the information unit in response to the user input, and to receive the output signal from the information unit and to communicate a user output in response to the output signal, the user output indicative of product location.

14. A system for providing product location information within a store, the system comprising:

an input means for receiving an input signal;

a signal processing means for processing the input signal to generate a product inquiry signal, the signal processing means being coupled to the input means;

a data storage means for storing product location information and providing a product location information signal to the signal processing means in response to the product inquiry signal, the data storage means being coupled to the signal processing means, and

an output means for providing an output signal, the output means also being coupled to the signal processing means,

wherein the output means generates the output signal in response to a command signal from the signal processing means, which generates the command signal in response to the product location information signal.

15. The system of claim 14, wherein a user interface comprises at least one of: each of the input means, the output means, the signal processing means, and the data storage means; and each of the input means, the output means and the signal processing means.

16. The system of claim 14, wherein the signal processing means comprises a first processing means for processing the input signal to generate the product inquiry signal, and a second processing means for generating the command signal, and wherein the data storage means of the user interface is configured to be programmed with the product location information by receiving information from a mobile information unit that may be coupled to the user interface.

17. The system of claim 14, wherein a user interface comprises each of the input means, the output means and the signal processing means, and wherein the user interface is coupled to a central hub that comprises the data storage means, and wherein the user interface is coupled to the central hub by way of electrical wiring.

18. The system of claim 14, wherein the input signal and the product inquiry signal may each be representative of

a query concerning a store feature other than the location of a product, wherein the data storage means is capable of storing information concerning a store feature other than the location of a product, and wherein the output signal and the product location information signal may each be representative of information concerning a store feature other than the location of a product.

19. The system of claim 14, wherein a central hub includes the signal processing means and the data storage means, and a user interface includes at least one of the input means and the output means.

20. A method of providing product location information within a store, the method comprising the steps of:

affixing at least a first input device at a first location within the store;

obtaining a product location inquiry at the first input device;

processing the product location inquiry at a signal processing device to determine a product location inquiry signal;

querying a database to obtain product location information in response to the product location inquiry signal;

providing a product location information signal in response to the product location inquiry signal;

providing an output signal at an output device, the output signal being a response to the product location inquiry.

ABSTRACT

A system and method are disclosed for providing product location information within a store. The system comprises a first user interface fixed within the store and an inventory information unit coupled to the first user interface. The first user interface is configured to receive an input signal from a user related to the identity of a product within the store, to process the input signal and to provide a product inquiry signal in response to the input signal. The first user interface is further configured to receive a location information signal, and to provide an output signal in response to the location information signal. The inventory information unit comprises a database containing product location information and is configured to provide the location information signal to the first user interface after receiving the product inquiry signal from the first user interface.

FIG. 1

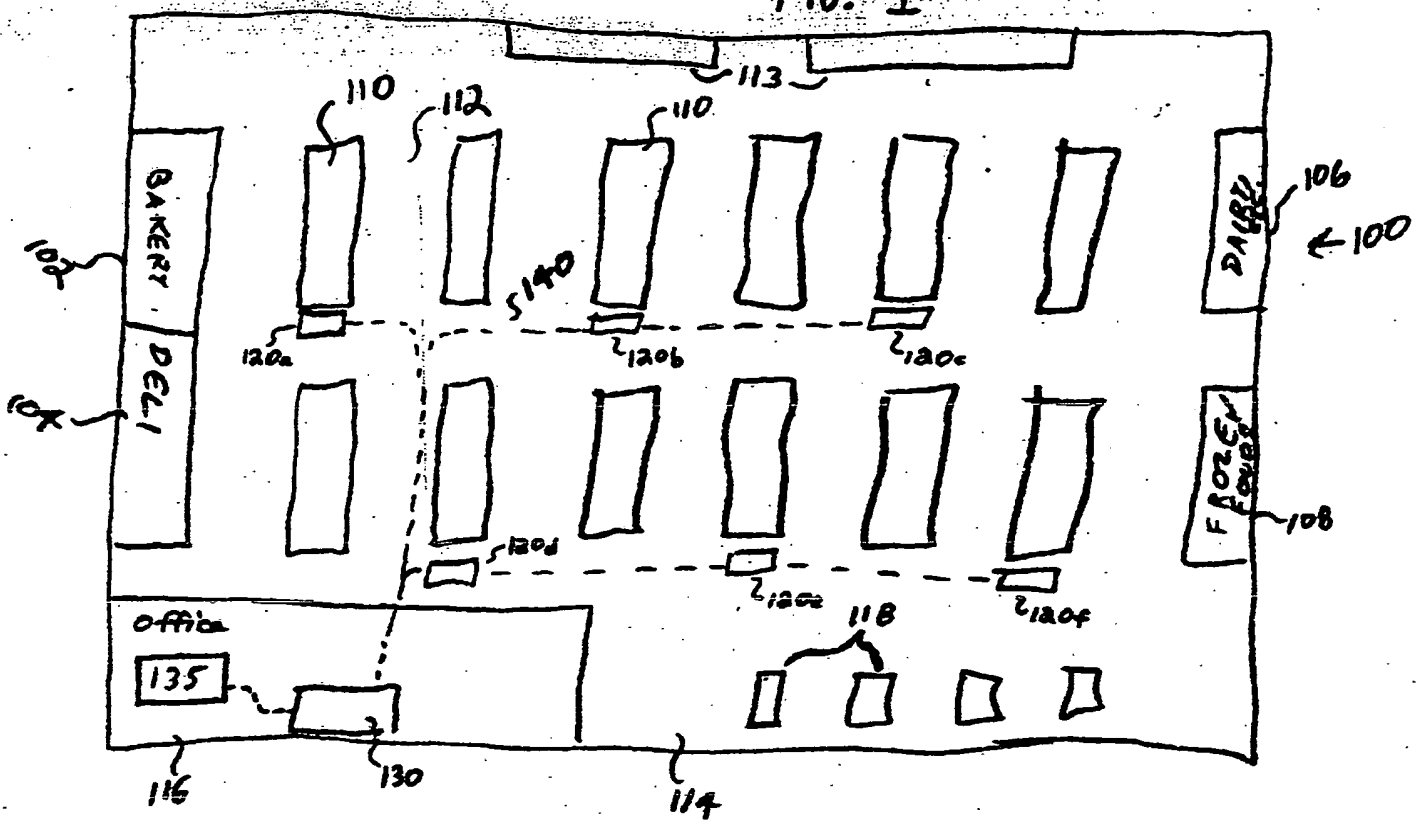

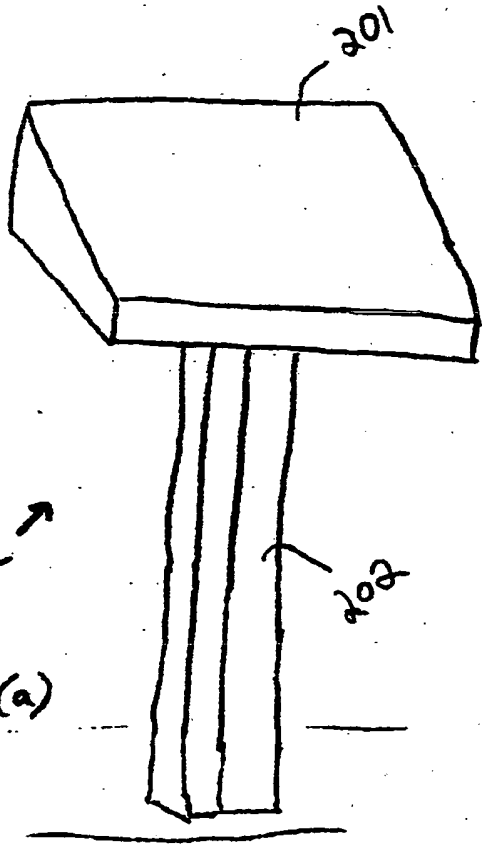

FIG. 2(a)

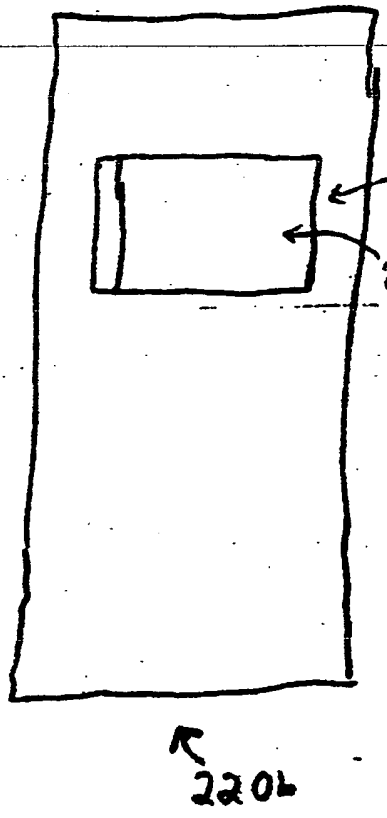

FIG. 2(b)

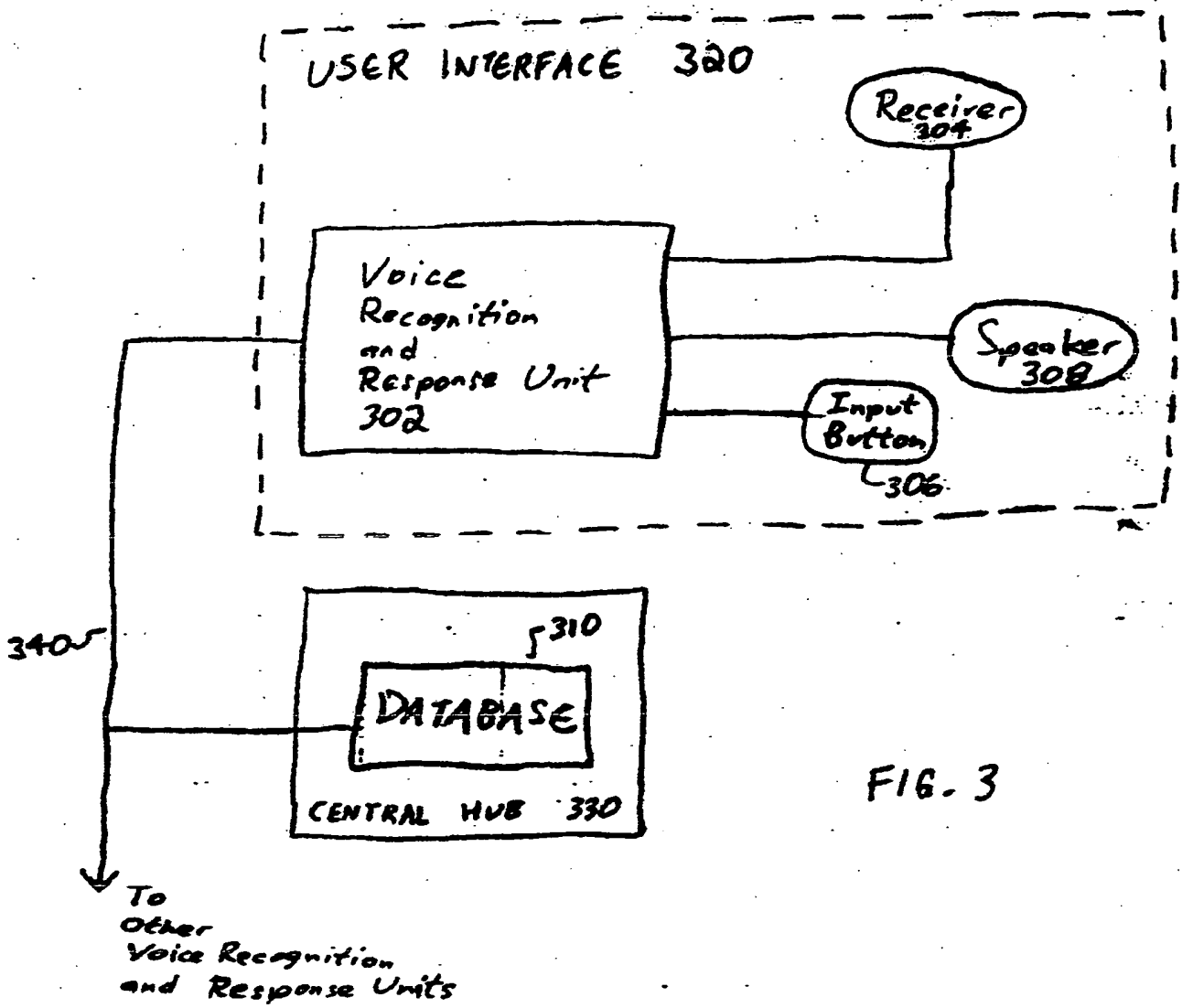
USER INTERFACE 320
Receiver 304
Voice Recognition and Response Unit 302
Speaker 308
Input Button 306
340
310
DATABASE
CENTRAL HUB 330
To Other Voice Recognition and Response Units

FIG. 3

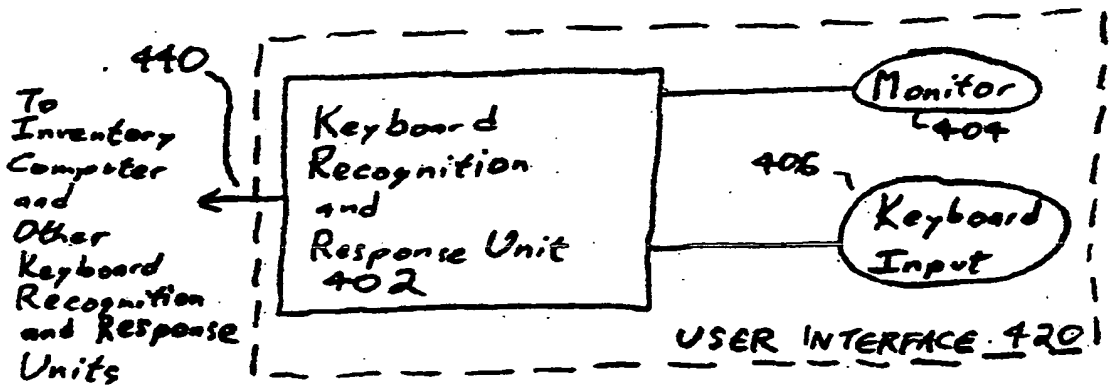
440
To Inventory Computer and Other Keyboard Recognition and Response Units
Keyboard Recognition and Response Unit 402
Monitor 404
406
Keyboard Input
USER INTERFACE 420

FIG. 4

FIG. 5

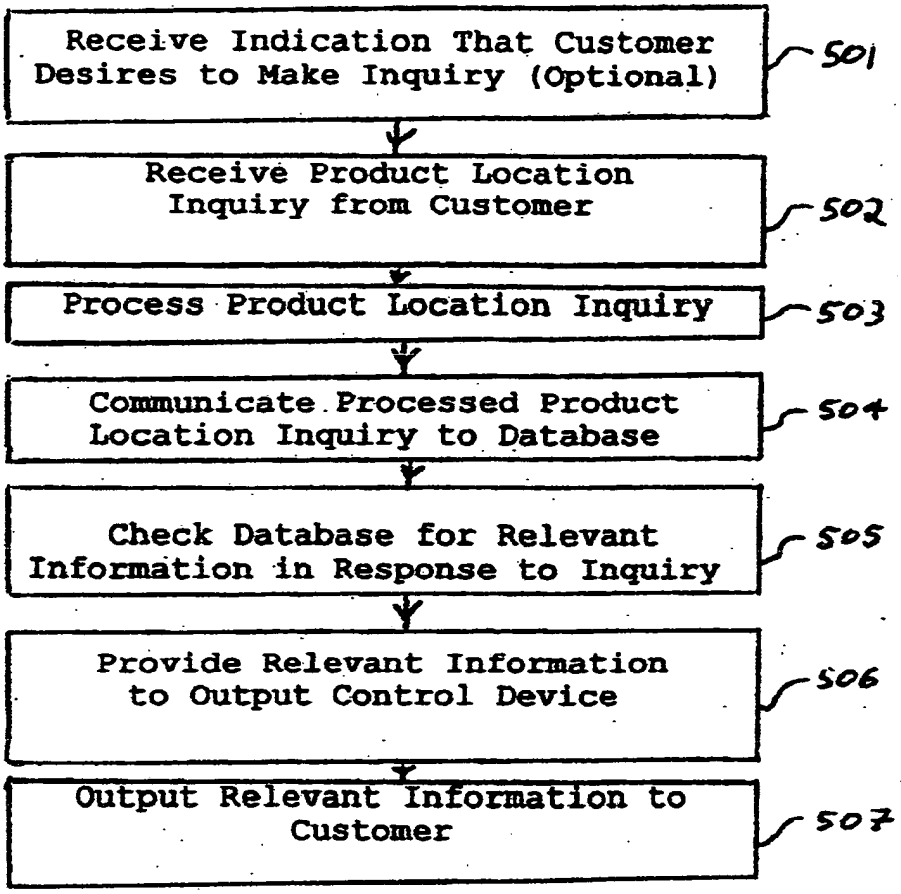
Receive Indication That Customer Desires to Make Inquiry (Optional)
501
Receive Product Location Inquiry from Customer
502
Process Product Location Inquiry
503
Communicate Processed Product Location Inquiry to Database
504
Check Database for Relevant Information in Response to Inquiry
505
Provide Relevant Information to Output Control Device
506
Output Relevant Information to Customer
507

PTO/AIA/14 (12-13)
Approved for use through 01/31/2014. OMB 0651-0032
U.S. Patent and Trademark Office; U.S. DEPARTMENT OF COMMERCE
Under the Paperwork Reduction Act of 1995, no persons are required to respond to a collection of information unless it contains a valid OMB control number.

070714 02228 U.S. PTO

Application Data Sheet 37 CFR 1.76	Attorney Docket Number	
	Application Number	
Title of Invention	APPARATUS AND METHOD FOR PROVIDING PRODUCT LOCATION INFORMATION TO CUSTOMERS IN A STORE	

The application data sheet is part of the provisional or nonprovisional application for which it is being submitted. The following form contains the bibliographic data arranged in a format specified by the United States Patent and Trademark Office as outlined in 37 CFR 1.76.
This document may be completed electronically and submitted to the Office in electronic format using the Electronic Filing System (EFS) or the document may be printed and included in a paper filed application.

Secrecy Order 37 CFR 5.2

☐ Portions or all of the application associated with this Application Data Sheet may fall under a Secrecy Order pursuant to 37 CFR 5.2 (Paper filers only. Applications that fall under Secrecy Order may not be filed electronically.)

Inventor Information:

Inventor 1 Remove

Legal Name

Prefix	Given Name	Middle Name	Family Name	Suffix
	John	T.	Pienkos	

Residence Information (Select One) ◉ US Residency ○ Non US Residency ○ Active US Military Service

City	Mequon	State/Province	WI	Country of Residence	US

Mailing Address of Inventor:

Address 1	10019 N. Miller Ct.		
Address 2			
City	Mequon	State/Province	WI
Postal Code	53092	Country i	US

All Inventors Must Be Listed - Additional Inventor Information blocks may be generated within this form by selecting the **Add** button. Add

Correspondence Information:

Enter either Customer Number or complete the Correspondence Information section below.
For further information see 37 CFR 1.33(a).

☒ **An Address is being provided for the correspondence Information of this application.**

Name 1	John T. Pienkos	Name 2	
Address 1	10019 N. Miller Ct.		
Address 2			
City	Mequon	State/Province	WI
Country i	US	Postal Code	53092
Phone Number		Fax Number	
Email Address		Add Email	Remove Email

Under the Paperwork Reduction Act of 1995, no persons are required to respond to a collection of information unless it contains a valid OMB control number.

Application Data Sheet 37 CFR 1.76	Attorney Docket Number	
	Application Number	
Title of Invention	APPARATUS AND METHOD FOR PROVIDING PRODUCT LOCATION INFORMATION TO CUSTOMERS IN A STORE	

Domestic Benefit/National Stage Information:

This section allows for the applicant to either claim benefit under 35 U.S.C. 119(e), 120, 121, or 365(c) or indicate National Stage entry from a PCT application. Providing this information in the application data sheet constitutes the specific reference required by 35 U.S.C. 119(e) or 120, and 37 CFR 1.78.
When referring to the current application, please leave the application number blank.

Prior Application Status	Pending		Remove
Application Number	Continuity Type	Prior Application Number	Filing Date (YYYY-MM-DD)
	Continuation of	13815667	2013-03-14
Prior Application Status	Pending		Remove
Application Number	Continuity Type	Prior Application Number	Filing Date (YYYY-MM-DD)
13815667	Continuation of	12924740	2010-10-04
Prior Application Status	Patented		Remove

Application Number	Continuity Type	Prior Application Number	Filing Date (YYYY-MM-DD)	Patent Number	Issue Date (YYYY-MM-DD)
12924740	Division of	11707842	2007-02-19	7819315	2010-10-02
Prior Application Status	Patented				Remove

Application Number	Continuity Type	Prior Application Number	Filing Date (YYYY-MM-DD)	Patent Number	Issue Date (YYYY-MM-DD)
11707842	Continuation of	09626365	2000-07-23	7231380	2007-06-12
Prior Application Status	Abandoned				Remove

Application Number	Continuity Type	Prior Application Number	Filing Date (YYYY-MM-DD)
09626365	Claims benefit of provisional	60158444	1999-10-09

Additional Domestic Benefit/National Stage Data may be generated within this form by selecting the **Add** button.

Foreign Priority Information:

This section allows for the applicant to claim priority to a foreign application. Providing this information in the application data sheet constitutes the claim for priority as required by 35 U.S.C. 119(b) and 37 CFR 1.55(d). When priority is claimed to a foreign application that is eligible for retrieval under the priority document exchange program (PDX)[i] the information will be used by the Office to automatically attempt retrieval pursuant to 37 CFR 1.55(h)(1) and (2). Under the PDX program, applicant bears the ultimate responsibility for ensuring that a copy of the foreign application is received by the Office from the participating foreign intellectual property office, or a certified copy of the foreign priority application is filed, within the time period specified in 37 CFR 1.55(g)(1).

			Remove
Application Number	Country[i]	Filing Date (YYYY-MM-DD)	Access Code[i] (if applicable)

Additional Foreign Priority Data may be generated within this form by selecting the **Add** button.

Under the Paperwork Reduction Act of 1995, no persons are required to respond to a collection of information unless it contains a valid OMB control number.

Application Data Sheet 37 CFR 1.76	Attorney Docket Number	
	Application Number	
Title of Invention	APPARATUS AND METHOD FOR PROVIDING PRODUCT LOCATION INFORMATION TO CUSTOMERS IN A STORE	

Statement under 37 CFR 1.55 or 1.78 for AIA (First Inventor to File) Transition Applications

☐ This application (1) claims priority to or the benefit of an application filed before March 16, 2013 and (2) also contains, or contained at any time, a claim to a claimed invention that has an effective filing date on or after March 16, 2013.
NOTE: By providing this statement under 37 CFR 1.55 or 1.78, this application, with a filing date on or after March 16, 2013, will be examined under the first inventor to file provisions of the AIA.

Authorization to Permit Access:

☐ Authorization to Permit Access to the Instant Application by the Participating Offices

If checked, the undersigned hereby grants the USPTO authority to provide the European Patent Office (EPO), the Japan Patent Office (JPO), the Korean Intellectual Property Office (KIPO), the World Intellectual Property Office (WIPO), and any other intellectual property offices in which a foreign application claiming priority to the instant patent application is filed access to the instant patent application. See 37 CFR 1.14(c) and (h). This box should not be checked if the applicant does not wish the EPO, JPO, KIPO, WIPO, or other intellectual property office in which a foreign application claiming priority to the instant patent application is filed to have access to the instant patent application.

In accordance with 37 CFR 1.14(h)(3), access will be provided to a copy of the instant patent application with respect to: 1) the instant patent application-as-filed; 2) any foreign application to which the instant patent application claims priority under 35 U.S.C. 119(a)-(d) if a copy of the foreign application that satisfies the certified copy requirement of 37 CFR 1.55 has been filed in the instant patent application; and 3) any U.S. application-as-filed from which benefit is sought in the instant patent application.

In accordance with 37 CFR 1.14(c), access may be provided to information concerning the date o f filing this Authorization.

Applicant Information:

Providing assignment information in this section does not substitute for compliance with any requirement of part 3 of Title 37 of CFR to have an assignment recorded by the Office.

PTO/AIA/14 (12-13)
Approved for use through 01/31/2014. OMB 0651-0032
U.S. Patent and Trademark Office; U.S. DEPARTMENT OF COMMERCE
Under the Paperwork Reduction Act of 1995, no persons are required to respond to a collection of information unless it contains a valid OMB control number.

Application Data Sheet 37 CFR 1.76	Attorney Docket Number	
	Application Number	
Title of Invention	APPARATUS AND METHOD FOR PROVIDING PRODUCT LOCATION INFORMATION TO CUSTOMERS IN A STORE	

Applicant 1

If the applicant is the inventor (or the remaining joint inventor or inventors under 37 CFR 1.45), this section should not be completed. The information to be provided in this section is the name and address of the legal representative who is the applicant under 37 CFR 1.43; or the name and address of the assignee, person to whom the inventor is under an obligation to assign the invention, or person who otherwise shows sufficient proprietary interest in the matter who is the applicant under 37 CFR 1.46. If the applicant is an applicant under 37 CFR 1.46 (assignee, person to whom the inventor is obligated to assign, or person who otherwise shows sufficient proprietary interest) together with one or more joint inventors, then the joint inventor or inventors who are also the applicant should be identified in this section.

Clear

○ Assignee	○ Legal Representative under 35 U.S.C. 117	○ Joint Inventor
○ Person to whom the inventor is obligated to assign.	○ Person who shows sufficient proprietary interest	

If applicant is the legal representative, indicate the authority to file the patent application, the inventor is:

Name of the Deceased or Legally Incapacitated Inventor :

If the Applicant is an Organization check here. ☐

Prefix	**Given Name**	Middle Name	**Family Name**	Suffix

Mailing Address Information For Applicant:

Address 1			
Address 2			
City		**State/Province**	
Country		Postal Code	
Phone Number		Fax Number	
Email Address			

Additional Applicant Data may be generated within this form by selecting the Add button.

Assignee Information including Non-Applicant Assignee Information:

Providing assignment information in this section does not subsitute for compliance with any requirement of part 3 of Title 37 of CFR to have an assignment recorded by the Office.

Assignee 1

Complete this section if assignee information, including non-applicant assignee information, is desired to be included on the patent application publication . An assignee-applicant identified in the "Applicant Information" section will appear on the patent application publication as an applicant. For an assignee-applicant, complete this section only if identification as an assignee is also desired on the patent application publication.

Approved for use through 01/31/2014. OMB 0651-0032
U.S. Patent and Trademark Office; U.S. DEPARTMENT OF COMMERCE
Under the Paperwork Reduction Act of 1995, no persons are required to respond to a collection of information unless it contains a valid OMB control number.

Application Data Sheet 37 CFR 1.76	Attorney Docket Number	
	Application Number	
Title of Invention	APPARATUS AND METHOD FOR PROVIDING PRODUCT LOCATION INFORMATION TO CUSTOMERS IN A STORE	

Application Information:

Title of the Invention	APPARATUS AND METHOD FOR PROVIDING PRODUCT LOCATION INFORMATION TO CUSTOMERS IN A STORE		
Attorney Docket Number		**Small Entity Status Claimed** ☒	
Application Type	Nonprovisional		
Subject Matter	Utility		
Total Number of Drawing Sheets (if any)	5	**Suggested Figure for Publication (if any)**	1

Filing By Reference :

Only complete this section when filing an application by reference under 35 U.S.C. 111(c) and 37 CFR 1.57(a). Do not complete this section if application papers including a specification and any drawings are being filed. Any domestic benefit or foreign priority information must be provided in the appropriate section(s) below (i.e., "Domestic Benefit/National Stage Information" and "Foreign Priority Information").

For the purposes of a filing date under 37 CFR 1.53(b), the description and any drawings of the present application are replaced by this reference to the previously filed application, subject to conditions and requirements of 37 CFR 1.57(a).

Application number of the previously filed application	Filing date (YYYY-MM-DD)	Intellectual Property Authority or Country

Publication Information:

☐ Request Early Publication (Fee required at time of Request 37 CFR 1.219)

☒ **Request Not to Publish.** I hereby request that the attached application not be published under 35 U.S.C. 122(b) and certify that the invention disclosed in the attached application **has not and will not** be the subject of an application filed in another country, or under a multilateral international agreement, that requires publication at eighteen months after filing.

Representative Information:

Representative information should be provided for all practitioners having a power of attorney in the application. Providing this information in the Application Data Sheet does not constitute a power of attorney in the application (see 37 CFR 1.32).
Either enter Customer Number or complete the Representative Name section below. If both sections are completed the customer Number will be used for the Representative Information during processing.

Please Select One:	○ Customer Number	○ US Patent Practitioner	○ Limited Recognition (37 CFR 11.9)
Customer Number			

Under the Paperwork Reduction Act of 1995, no persons are required to respond to a collection of information unless it contains a valid OMB control number.

Application Data Sheet 37 CFR 1.76	Attorney Docket Number	
	Application Number	
Title of Invention	APPARATUS AND METHOD FOR PROVIDING PRODUCT LOCATION INFORMATION TO CUSTOMERS IN A STORE	

If the Assignee or Non-Applicant Assignee is an Organization check here. ☐

Prefix	**Given Name**	Middle Name	**Family Name**	Suffix

Mailing Address Information For Assignee including Non-Applicant Assignee:

Address 1			
Address 2			
City		**State/Province**	
Country i		Postal Code	
Phone Number		Fax Number	
Email Address			

Additional Assignee or Non-Applicant Assignee Data may be generated within this form by selecting the Add button.

Signature:

NOTE: This form must be signed in accordance with 37 CFR 1.33. See 37 CFR 1.4 for signature requirements and certifications.

Signature				Date (YYYY-MM-DD)	2014-07-07
First Name	John	Last Name	Pienkos	Registration Number	

Additional Signature may be generated within this form by selecting the Add button.

This collection of information is required by 37 CFR 1.76. The information is required to obtain or retain a benefit by the public which is to file (and by the USPTO to process) an application. Confidentiality is governed by 35 U.S.C. 122 and 37 CFR 1.14. This collection is estimated to take 23 minutes to complete, including gathering, preparing, and submitting the completed application data sheet form to the USPTO. Time will vary depending upon the individual case. Any comments on the amount of time you require to complete this form and/or suggestions for reducing this burden, should be sent to the Chief Information Officer, U.S. Patent and Trademark Office, U.S. Department of Commerce, P.O. Box 1450, Alexandria, VA 22313-1450. DO NOT SEND FEES OR COMPLETED FORMS TO THIS ADDRESS. **SEND TO: Commissioner for Patents, P.O. Box 1450, Alexandria, VA 22313-1450.**

PTO/SB/35 (07-09)
Approved for use through 07/31/2012. OMB 0651-0031
U.S. Patent and Trademark Office; U. S. DEPARTMENT OF COMMERCE
Under the Paperwork Reduction Act of 1995, no persons are required to respond to a collection of information unless it displays a valid OMB control number.

NONPUBLICATION REQUEST UNDER 35 U.S.C. 122(b)(2)(B)(i)

First Named Inventor	JOHN T. PIENKOS
Title	APPARATUS AND METHOD FOR PROVIDING PRODUCT LOCATION INFORMATION TO CUSTOMERS IN A STORE
Attorney Docket Number	

I hereby certify that the invention disclosed in the attached application **has not and will not be** the subject of an application filed in another country, or under a multilateral international agreement, that requires publication at eighteen months after filing.

I hereby request that the attached application not be published under 35 U.S.C. 122(b).

Signature: [signature]

Date: July 7, 2014

Typed or printed name: JOHN T. PIENKOS

Registration Number, if applicable: _____

Telephone Number: 262-643-4165

This request must be signed in compliance with 37 CFR 1.33(b) and submitted with the application **upon filing.**

Applicant may rescind this nonpublication request at any time. If applicant rescinds a request that an application not be published under 35 U.S.C. 122(b), the application will be scheduled for publication at eighteen months from the earliest claimed filing date for which a benefit is claimed.

If applicant subsequently files an application directed to the invention disclosed in the attached application in another country, or under a multilateral international agreement, that requires publication of applications eighteen months after filing, the applicant **must** notify the United States Patent and Trademark Office of such filing within forty-five (45) days after the date of the filing of such foreign or international application. **Failure to do so will result in abandonment of this application (35 U.S.C. 122(b)(2)(B)(iii)).**

This collection of information is required by 37 CFR 1.213(a). The information is required to obtain or retain a benefit by the public which is to file (and by the USPTO to process) an application. Confidentiality is governed by 35 U.S.C. 122 and 37 CFR 1.11 and 1.14. This collection is estimated to take 6 minutes to complete, including gathering, preparing, and submitting the completed application form to the USPTO. Time will vary depending upon the individual case. Any comments on the amount of time you require to complete this form and/or suggestions for reducing this burden, should be sent to the Chief Information Officer, U.S. Patent and Trademark Office, U.S. Department of Commerce, P.O. Box 1450, Alexandria, VA 22313-1450. DO NOT SEND FEES OR COMPLETED FORMS TO THIS ADDRESS. **SEND TO: Commissioner for Patents, P.O. Box 1450, Alexandria, VA 22313-1450.**

If you need assistance in completing the form, call 1-800-PTO-9199 (1-800-786-9199) and select option 2.

UNITED STATES PATENT AND TRADEMARK OFFICE

UNITED STATES DEPARTMENT OF COMMERCE
United States Patent and Trademark Office
Address: COMMISSIONER FOR PATENTS
P.O. Box 1450
Alexandria, Virginia 22313-1450
www.uspto.gov

APPLICATION NUMBER	FILING OR 371(C) DATE	FIRST NAMED APPLICANT	ATTY. DOCKET NO./TITLE
14/120,873	07/07/2014	John T. Pienkos	

CONFIRMATION NO. 2619

FORMALITIES LETTER

John T. Pienkos
10019 N. Miller Ct.
Mequon, WI 53092

OC000000069728387

Date Mailed: 07/21/2014

NOTICE TO FILE MISSING PARTS OF NONPROVISIONAL APPLICATION

FILED UNDER 37 CFR 1.53(b)

Filing Date Granted

Items Required To Avoid Abandonment:

An application number and filing date have been accorded to this application. The item(s) indicated below, however, are missing. Applicant is given **TWO MONTHS** from the date of this Notice within which to file all required items below to avoid abandonment. Extensions of time may be obtained by filing a petition accompanied by the extension fee under the provisions of 37 CFR 1.136(a).

- The statutory basic filing fee is missing.
- The application search fee must be submitted.
- The application examination fee must be submitted.

The application is informal since it does not comply with the regulations for the reason(s) indicated below.

The required item(s) identified below must be timely submitted to avoid abandonment:

- Replacement drawings in compliance with 37 CFR 1.84 and 37 CFR 1.121(d) are required. The drawings submitted are not acceptable because:
  - The drawings must be reasonably free from erasures and must be free from alterations, overwriting, interlineations, folds, and copy marks. See Figure(s) 1, 2B, 3.

Applicant is cautioned that correction of the above items may cause the specification and drawings page count to exceed 100 pages. If the specification and drawings exceed 100 pages, applicant will need to submit the required application size fee.

- Additional claim fees of $ **210** as a small entity, including any required multiple dependent claim fee, are required. Applicant must submit the additional claim fees or cancel the additional claims for which fees are due.
- Surcharge as set forth in 37 CFR 1.16(f) must be submitted.
  The surcharge is due for any one of:
  - late submission of the basic filing fee, search fee, or examination fee,
  - late submission of inventor's oath or declaration,
  - filing an application that does not contain at least one claim on filing, or
  - submission of an application filed by reference to a previously filed application.

SUMMARY OF FEES DUE:

The fee(s) required within **TWO MONTHS** from the date of this Notice to avoid abandonment is/are itemized below. Small entity discount is in effect. If applicant is qualified for micro entity status, an acceptable Certification of Micro Entity Status must be submitted to establish micro entity status. (See 37 CFR 1.29 and forms PTO/SB/15A and 15B.)

- $ **140** basic filing fee.
- $ **200** non-electronic filing fee.
- $ **70** surcharge.
- $ **300** search fee.
- $ **360** examination fee.
- $ **210** for **1** independent claims over 3.
- $(**0**) previous unapplied payment amount.
- $ **1280** TOTAL FEE BALANCE DUE.

Items Required To Avoid Processing Delays:

Applicant is notified that the above-identified application contains the deficiencies noted below. No period for reply is set forth in this notice for correction of these deficiencies. However, if a deficiency relates to the inventor's oath or declaration, the applicant must file an oath or declaration in compliance with 37 CFR 1.63, or a substitute statement in compliance with 37 CFR 1.64, executed by or with respect to each actual inventor no later than the expiration of the time period set in the "Notice of Allowability" to avoid abandonment. See 37 CFR 1.53(f).

- A properly executed inventor's oath or declaration has not been received for the following inventor(s):
  John T. Pienkos

Replies must be received in the USPTO within the set time period or must include a proper Certificate of Mailing or Transmission under 37 CFR 1.8 with a mailing or transmission date within the set time period. For more information and a suggested format, see Form PTO/SB/92 and MPEP 512.

Replies should be mailed to:

Mail Stop Missing Parts
Commissioner for Patents
P.O. Box 1450
Alexandria VA 22313-1450

Registered users of EFS-Web may alternatively submit their reply to this notice via EFS-Web, including a copy of this Notice and selecting the document description "Applicant response to Pre-Exam Formalities Notice". https://sportal.uspto.gov/authenticate/AuthenticateUserLocalEPF.html

For more information about EFS-Web please call the USPTO Electronic Business Center at **1-866-217-9197** or visit our website at http://www.uspto.gov/ebc.

If you are not using EFS-Web to submit your reply, you must include a copy of this notice.

/aabranyos/

Office of Data Management, Application Assistance Unit (571) 272-4000, or (571) 272-4200, or 1-888-786-0101

PATENT APPLICATION FEE DETERMINATION RECORD

Substitute for Form PTO-875

Application or Docket Number
14/120,873

APPLICATION AS FILED - PART I

FOR	(Column 1) NUMBER FILED	(Column 2) NUMBER EXTRA	SMALL ENTITY RATE($)	SMALL ENTITY FEE($)	OR	OTHER THAN SMALL ENTITY RATE($)	OTHER THAN SMALL ENTITY FEE($)
BASIC FEE (37 CFR 1.16(a), (b), or (c))	N/A	N/A	N/A	140		N/A	
SEARCH FEE (37 CFR 1.16(k), (i), or (m))	N/A	N/A	N/A	300		N/A	
EXAMINATION FEE (37 CFR 1.16(o), (p), or (q))	N/A	N/A	N/A	360		N/A	
TOTAL CLAIMS (37 CFR 1.16(i))	20 minus 20 =	*	x 40 =	0.00	OR		
INDEPENDENT CLAIMS (37 CFR 1.16(h))	4 minus 3 =	* 1	x 210 =	210			
APPLICATION SIZE FEE (37 CFR 1.16(s))	If the specification and drawings exceed 100 sheets of paper, the application size fee due is $310 ($155 for small entity) for each additional 50 sheets or fraction thereof. See 35 U.S.C. 41(a)(1)(G) and 37 CFR 1.16(s).			0.00			
MULTIPLE DEPENDENT CLAIM PRESENT (37 CFR 1.16(j))				0.00			
* If the difference in column 1 is less than zero, enter "0" in column 2.			TOTAL	1010		TOTAL	

APPLICATION AS AMENDED - PART II

		(Column 1) CLAIMS REMAINING AFTER AMENDMENT		(Column 2) HIGHEST NUMBER PREVIOUSLY PAID FOR	(Column 3) PRESENT EXTRA	SMALL ENTITY RATE($)	SMALL ENTITY ADDITIONAL FEE($)	OR	OTHER THAN SMALL ENTITY RATE($)	OTHER THAN SMALL ENTITY ADDITIONAL FEE($)
AMENDMENT A	Total (37 CFR 1.16(i))	*	Minus	**	=	x =		OR	x =	
AMENDMENT A	Independent (37 CFR 1.16(h))	*	Minus	***	=	x =		OR	x =	
AMENDMENT A	Application Size Fee (37 CFR 1.16(s))									
AMENDMENT A	FIRST PRESENTATION OF MULTIPLE DEPENDENT CLAIM (37 CFR 1.16(j))							OR		
						TOTAL ADD'L FEE		OR	TOTAL ADD'L FEE	

		(Column 1) CLAIMS REMAINING AFTER AMENDMENT		(Column 2) HIGHEST NUMBER PREVIOUSLY PAID FOR	(Column 3) PRESENT EXTRA	RATE($)	ADDITIONAL FEE($)	OR	RATE($)	ADDITIONAL FEE($)
AMENDMENT B	Total (37 CFR 1.16(i))	*	Minus	**	=	x =		OR	x =	
AMENDMENT B	Independent (37 CFR 1.16(h))	*	Minus	***	=	x =		OR	x =	
AMENDMENT B	Application Size Fee (37 CFR 1.16(s))									
AMENDMENT B	FIRST PRESENTATION OF MULTIPLE DEPENDENT CLAIM (37 CFR 1.16(j))							OR		
						TOTAL ADD'L FEE		OR	TOTAL ADD'L FEE	

* If the entry in column 1 is less than the entry in column 2, write "0" in column 3.
** If the "Highest Number Previously Paid For" IN THIS SPACE is less than 20, enter "20".
*** If the "Highest Number Previously Paid For" IN THIS SPACE is less than 3, enter "3".
The "Highest Number Previously Paid For" (Total or Independent) is the highest found in the appropriate box in column 1.

UNITED STATES PATENT AND TRADEMARK OFFICE

UNITED STATES DEPARTMENT OF COMMERCE
United States Patent and Trademark Office
Address: COMMISSIONER FOR PATENTS
P.O. Box 1450
Alexandria, Virginia 22313-1450
www.uspto.gov

APPLICATION NUMBER	FILING or 371(c) DATE	GRP ART UNIT	FIL FEE REC'D	ATTY.DOCKET.NO	TOT CLAIMS	IND CLAIMS
14/120,873	07/07/2014	2876	0.00		20	4

CONFIRMATION NO. 2619

John T. Pienkos
10019 N. Miller Ct.
Mequon, WI 53092

FILING RECEIPT

OC000000069728386

Date Mailed: 07/21/2014

Receipt is acknowledged of this non-provisional patent application. The application will be taken up for examination in due course. Applicant will be notified as to the results of the examination. Any correspondence concerning the application must include the following identification information: the U.S. APPLICATION NUMBER, FILING DATE, NAME OF APPLICANT, and TITLE OF INVENTION. Fees transmitted by check or draft are subject to collection. Please verify the accuracy of the data presented on this receipt. **If an error is noted on this Filing Receipt, please submit a written request for a Filing Receipt Correction. Please provide a copy of this Filing Receipt with the changes noted thereon. If you received a "Notice to File Missing Parts" for this application, please submit any corrections to this Filing Receipt with your reply to the Notice. When the USPTO processes the reply to the Notice, the USPTO will generate another Filing Receipt incorporating the requested corrections**

Inventor(s)

John T. Pienkos, Mequon, WI;

Applicant(s)

John T. Pienkos, Mequon, WI;

Power of Attorney: None

Domestic Priority data as claimed by applicant

This application is a CON of 13/815,667 03/14/2013 PAT 8787933
which is a CON of 12/924,740 10/04/2010 PAT 8775260
which is a DIV of 11/707,842 02/19/2007 PAT 7819315
which is a CON of 09/626,365 07/23/2000 PAT 7231380
which claims benefit of 60/158,444 10/09/1999

Foreign Applications for which priority is claimed (You may be eligible to benefit from the **Patent Prosecution Highway** program at the USPTO. Please see http://www.uspto.gov for more information.) - None.
Foreign application information must be provided in an Application Data Sheet in order to constitute a claim to foreign priority. See 37 CFR 1.55 and 1.76.

If Required, Foreign Filing License Granted: 07/21/2014
The country code and number of your priority application, to be used for filing abroad under the Paris Convention, is **US 14/120,873**
Projected Publication Date: Request for Non-Publication Acknowledged
Non-Publication Request: Yes
Early Publication Request: No
**** SMALL ENTITY ****

Title

APPARATUS AND METHOD FOR PROVIDING PRODUCT LOCATION INFORMATION TO CUSTOMERS IN A STORE

Preliminary Class

235

Statement under 37 CFR 1.55 or 1.78 for AIA (First Inventor to File) Transition Applications: No

PROTECTING YOUR INVENTION OUTSIDE THE UNITED STATES

Since the rights granted by a U.S. patent extend only throughout the territory of the United States and have no effect in a foreign country, an inventor who wishes patent protection in another country must apply for a patent in a specific country or in regional patent offices. Applicants may wish to consider the filing of an international application under the Patent Cooperation Treaty (PCT). An international (PCT) application generally has the same effect as a regular national patent application in each PCT-member country. The PCT process **simplifies** the filing of patent applications on the same invention in member countries, but **does not result** in a grant of "an international patent" and does not eliminate the need of applicants to file additional documents and fees in countries where patent protection is desired.

Almost every country has its own patent law, and a person desiring a patent in a particular country must make an application for patent in that country in accordance with its particular laws. Since the laws of many countries differ in various respects from the patent law of the United States, applicants are advised to seek guidance from specific foreign countries to ensure that patent rights are not lost prematurely.

Applicants also are advised that in the case of inventions made in the United States, the Director of the USPTO must issue a license before applicants can apply for a patent in a foreign country. The filing of a U.S. patent application serves as a request for a foreign filing license. The application's filing receipt contains further information and guidance as to the status of applicant's license for foreign filing.

Applicants may wish to consult the USPTO booklet, "General Information Concerning Patents" (specifically, the section entitled "Treaties and Foreign Patents") for more information on timeframes and deadlines for filing foreign patent applications. The guide is available either by contacting the USPTO Contact Center at 800-786-9199, or it can be viewed on the USPTO website at http://www.uspto.gov/web/offices/pac/doc/general/index.html.

For information on preventing theft of your intellectual property (patents, trademarks and copyrights), you may wish to consult the U.S. Government website, http://www.stopfakes.gov. Part of a Department of Commerce initiative, this website includes self-help "toolkits" giving innovators guidance on how to protect intellectual property in specific countries such as China, Korea and Mexico. For questions regarding patent enforcement issues, applicants may call the U.S. Government hotline at 1-866-999-HALT (1-866-999-4258).

LICENSE FOR FOREIGN FILING UNDER

Title 35, United States Code, Section 184

Title 37, Code of Federal Regulations, 5.11 & 5.15

GRANTED

The applicant has been granted a license under 35 U.S.C. 184, if the phrase "IF REQUIRED, FOREIGN FILING LICENSE GRANTED" followed by a date appears on this form. Such licenses are issued in all applications where the conditions for issuance of a license have been met, regardless of whether or not a license may be required as set forth in 37 CFR 5.15. The scope and limitations of this license are set forth in 37 CFR 5.15(a) unless an earlier license has been issued under 37 CFR 5.15(b). The license is subject to revocation upon written notification. The date indicated is the effective date of the license, unless an earlier license of similar scope has been granted under 37 CFR 5.13 or 5.14.

This license is to be retained by the licensee and may be used at any time on or after the effective date thereof unless it is revoked. This license is automatically transferred to any related applications(s) filed under 37 CFR 1.53(d). This license is not retroactive.

The grant of a license does not in any way lessen the responsibility of a licensee for the security of the subject matter as imposed by any Government contract or the provisions of existing laws relating to espionage and the national security or the export of technical data. Licensees should apprise themselves of current regulations especially with respect to certain countries, of other agencies, particularly the Office of Defense Trade Controls, Department of State (with respect to Arms, Munitions and Implements of War (22 CFR 121-128)); the Bureau of Industry and Security, Department of Commerce (15 CFR parts 730-774); the Office of Foreign AssetsControl, Department of Treasury (31 CFR Parts 500+) and the Department of Energy.

NOT GRANTED

No license under 35 U.S.C. 184 has been granted at this time, if the phrase "IF REQUIRED, FOREIGN FILING LICENSE GRANTED" DOES NOT appear on this form. Applicant may still petition for a license under 37 CFR 5.12, if a license is desired before the expiration of 6 months from the filing date of the application. If 6 months has lapsed from the filing date of this application and the licensee has not received any indication of a secrecy order under 35 U.S.C. 181, the licensee may foreign file the application pursuant to 37 CFR 5.15(b).

SelectUSA

The United States represents the largest, most dynamic marketplace in the world and is an unparalleled location for business investment, innovation, and commercialization of new technologies. The U.S. offers tremendous resources and advantages for those who invest and manufacture goods here. Through SelectUSA, our nation works to promote and facilitate business investment. SelectUSA provides information assistance to the international investor community; serves as an ombudsman for existing and potential investors; advocates on behalf of U.S. cities, states, and regions competing for global investment; and counsels U.S. economic development organizations on investment attraction best practices. To learn more about why the United States is the best country in the world to develop technology, manufacture products, deliver services, and grow your business, visit http://www.SelectUSA.gov or call +1-202-482-6800.

RECEIVED
CENTRAL FAX CENTER
NOV 21 2014

I hereby certify that this correspondence is being transmitted by facsimile to the United States Patent Office, at (571) 273-8300. Date and Signature of transmittal: 11/21/2014

IN THE UNITED STATES PATENT AND TRADEMARK OFFICE

Applicant: Pienkos, John T.

Serial No.: 14/120,873

Filing Date: July 7, 2014

Title: APPARATUS AND METHOD FOR PROVIDING PRODUCT LOCATION INFORMATION TO CUSTOMERS IN A STORE

Art Unit: 2876

PRELIMINARY AMENDMENT

Commissioner for Patents
P.O. Box 1450
Alexandria, VA 22313-1450

Dear Sir:

The Applicant respectfully submits the following amendments and remarks:

Amendments to the claims are reflected in the listing of claims that begins on page 2 of this paper.

Remarks begin on page 3 of this paper.

Amendments to the Claims

This listing of claims will replace all prior versions, and listings, of claims in the Application:

Listing of Claims:

1.-19. (Cancelled).

20. (Original) A method of providing product location information within a store, the method comprising the steps of:

affixing at least a first input device at a first location within the store;

obtaining a product location inquiry at the first input device;

processing the product location inquiry at a signal processing device to determine a product location inquiry signal;

querying a database to obtain product location information in response to the product location inquiry signal;

providing a product location information signal in response to the product location inquiry signal;

providing an output signal at an output device, the output signal being a response to the product location inquiry.

PAGE 10/13 * RCVD AT 11/21/2014 7:49:26 PM [Eastern Standard Time] * SVR:W-PTOFAX-001/31 * DNIS:2738300 * CSID:2626434165 * DURATION (mm-ss):05-48

RECEIVED
CENTRAL FAX CENTER
NOV 2 1 2014

REMARKS/ARGUMENTS

The Applicant appreciates the Examiner's consideration of the present Application. In order to avoid excess claim fees, the Applicant has amended the claims as originally filed so as to cancel all of the original claims except for independent claim 20. This amendment does not involve the addition of any new matter to the Application.

In view of this amendment, consideration of the present Application is earnestly requested.

The Applicant invites the Examiner to contact the undersigned at the telephone number below if it is believed that discussion with the Applicant could advance the prosecution of the Application.

Respectfully,

John T. Pienkos
Applicant

Dated: 11/21/2014

10019 N. Miller Ct.
Mequon, WI 53092
(262) 643-4165

PAGE 11/13 * RCVD AT 11/21/2014 7:49:26 PM [Eastern Standard Time] * SVR:W-PTOFAX-001/31 * DNIS:2738300 * CSID:2626434165 * DURATION (mm-ss):05-48

RECEIVED
CENTRAL FAX CENTER

NOV 2 1 2014

TO: U.S. Patent and Trademark Office
ART UNIT 2876
FAX: (571) 273-8300

FROM: JOHN PIENKOS
APPLICANT, U.S. PATENT APPL. NO. 14/120,873
FAX: (262) 643-4165

DATE: November 21, 2014

RE: Response to Notice to File Missing Parts, Including Response (1 page), Replacement Drawings (4 Pages), Credit Card Payment Form, Petition for Extension of Time (1 Page), Preliminary Amendment (3 Pages), and Copy of Notice to File Missing Parts (2 pages)

13 PAGES INCLUDING COVER SHEET

RECEIVED
CENTRAL FAX CENTER
NOV 2 1 2014

I hereby certify that this correspondence is being faxed to the U.S. Patent and Trademark Office at (571) 273-8300 on the following date: November 21, 2014

IN THE UNITED STATES PATENT AND TRADEMARK OFFICE

Applicant(s):	Pienkos, John T.
Serial No.:	14/120,873
Filed:	July 7, 2014
For:	APPARATUS AND METHOD FOR PROVIDING PRODUCT LOCATION INFORMATION TO CUSTOMERS IN A STORE
Grp. Art Unit:	2876

SUBMISSION OF FORMAL DRAWINGS IN RESPONSE TO NOTICE TO FILE CORRECTED APPLICATION PAPERS

Commissioner for Patents
P.O. Box 1450
Alexandria, VA 22313-1450

Dear Sir:

Enclosed herewith are four **(4)** sheets of formal drawings for the above-identified patent application, which are provided as Replacement Drawings in the present Application. The Applicant submits that these formal drawings do not add new matter. Entry of the formal drawings is respectfully requested.

The Applicant believes that no extension of time is required and that no fees are due in connection with this submission. If any extension of time is deemed required, the Applicant provisionally requests and petitions for such extension of time, and if any fees are deemed due or there are any other questions that arise with respect to the submitted figures or otherwise, the Examiner is urged to contact the Applicant at the phone number listed below.

Respectfully submitted,

Date: 11 / 21 , 2014

John T. Pienkos
Applicant
(262) 643-4165

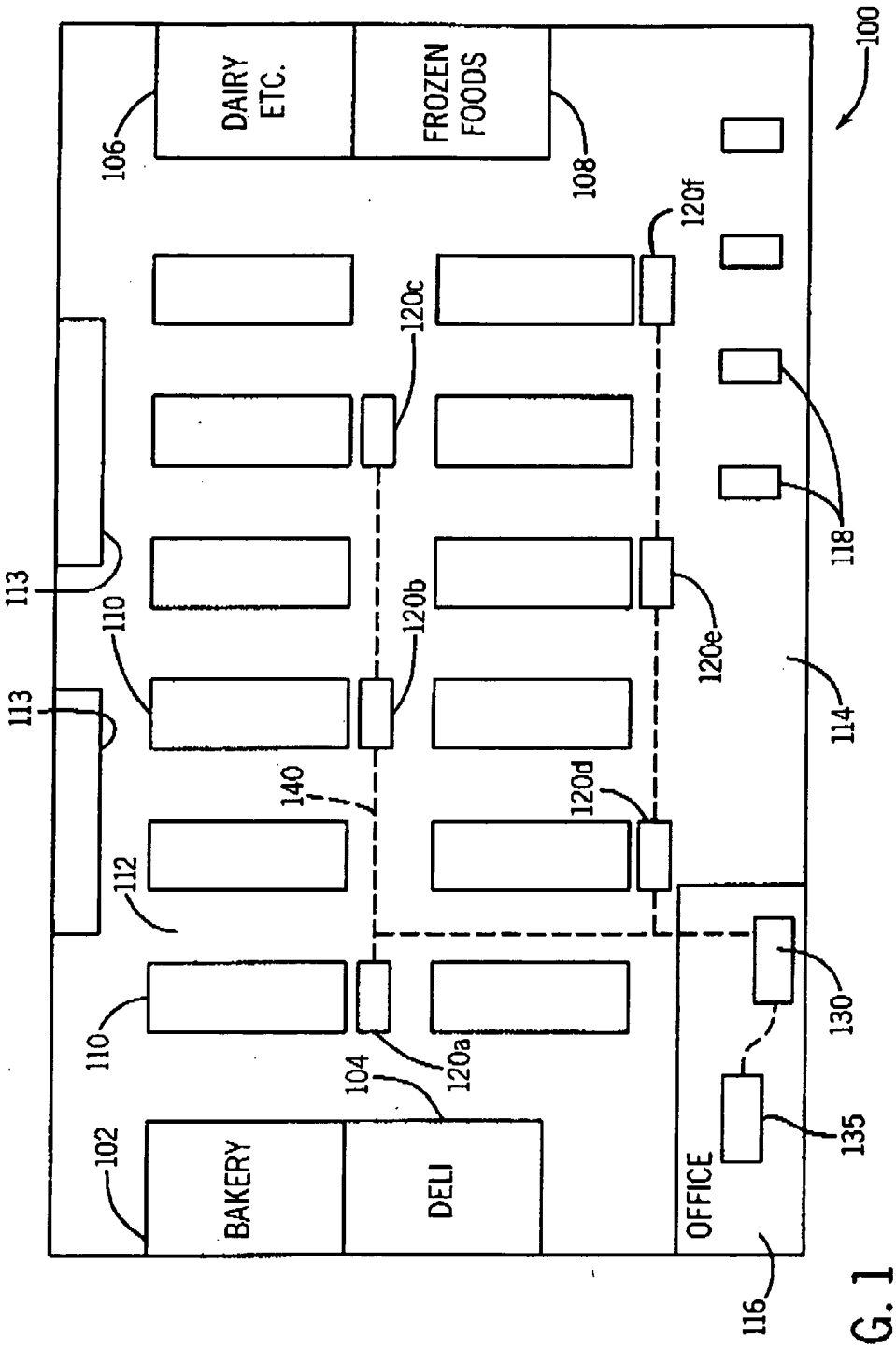
DAIRY ETC.
FROZEN FOODS
BAKERY
DELI
OFFICE
100
102
104
106
108
110
112
113
114
116
118
120a
120b
120c
120d
120e
120f
130
135
140

FIG. 1

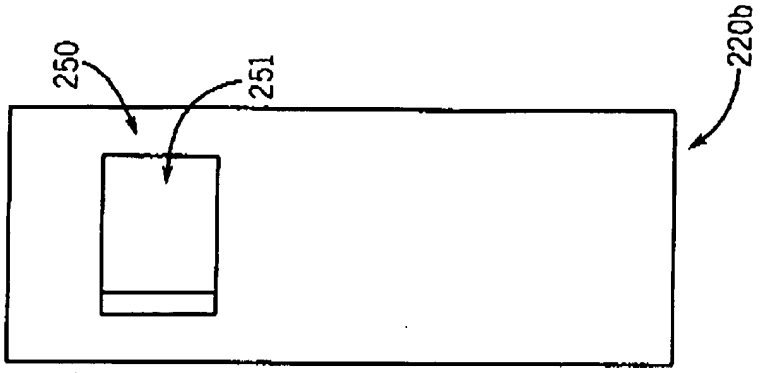

FIG. 2(b)

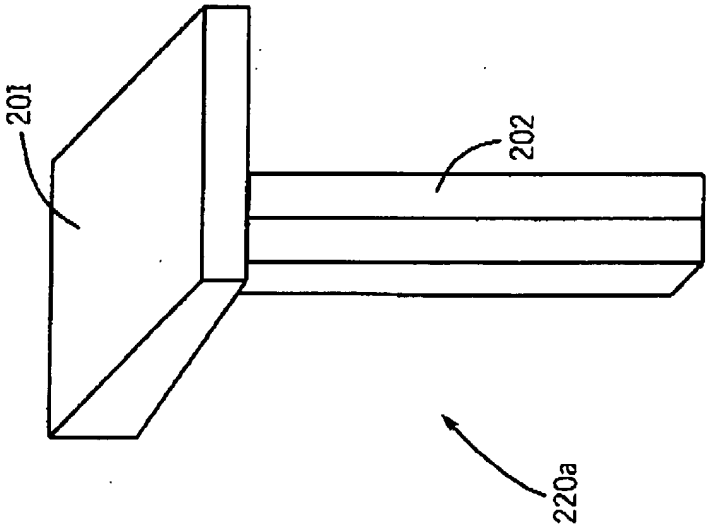

FIG. 2(a)

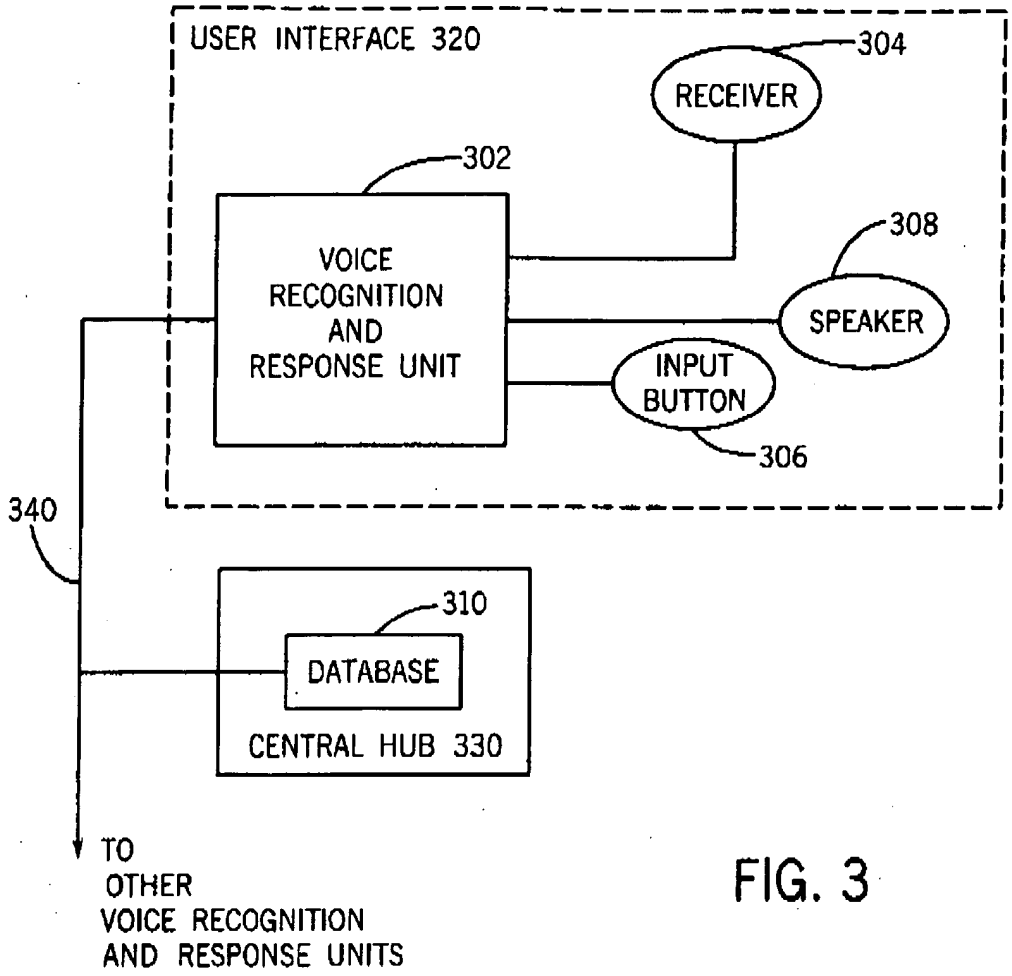
USER INTERFACE 320
304
RECEIVER
302
VOICE RECOGNITION AND RESPONSE UNIT
308
SPEAKER
INPUT BUTTON
306
340
310
DATABASE
CENTRAL HUB 330
TO OTHER VOICE RECOGNITION AND RESPONSE UNITS

FIG. 3

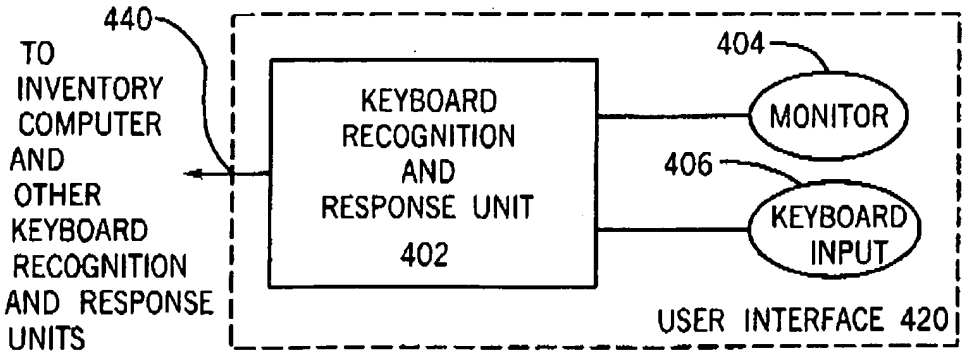
440
TO INVENTORY COMPUTER AND OTHER KEYBOARD RECOGNITION AND RESPONSE UNITS
KEYBOARD RECOGNITION AND RESPONSE UNIT
402
404
MONITOR
406
KEYBOARD INPUT
USER INTERFACE 420

FIG. 4

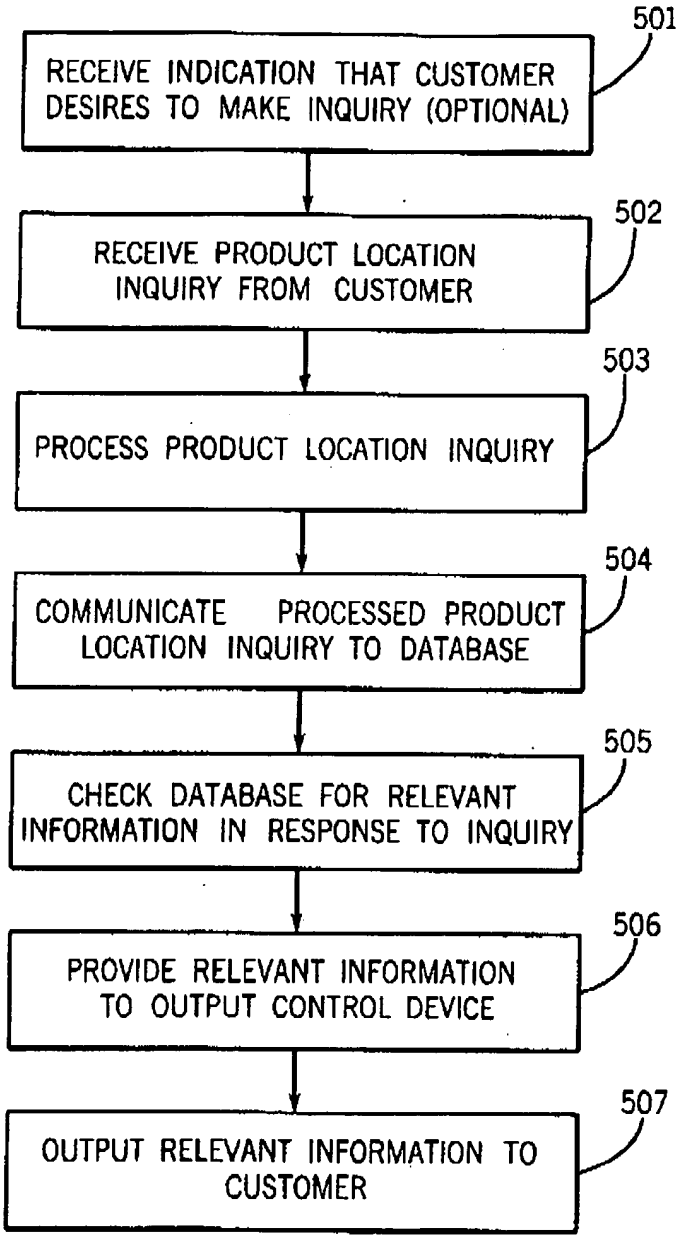
501
RECEIVE INDICATION THAT CUSTOMER DESIRES TO MAKE INQUIRY (OPTIONAL)
502
RECEIVE PRODUCT LOCATION INQUIRY FROM CUSTOMER
503
PROCESS PRODUCT LOCATION INQUIRY
504
COMMUNICATE PROCESSED PRODUCT LOCATION INQUIRY TO DATABASE
505
CHECK DATABASE FOR RELEVANT INFORMATION IN RESPONSE TO INQUIRY
506
PROVIDE RELEVANT INFORMATION TO OUTPUT CONTROL DEVICE
507
OUTPUT RELEVANT INFORMATION TO CUSTOMER

FIG. 5

RECEIVED
CENTRAL FAX CENTER
NOV 2 1 2014

PTO/AIA/22 (03-13)
Approved for use through 7/31/2016. OMB 0651-0031
U.S. Patent and Trademark Office; U.S. DEPARTMENT OF COMMERCE
Under the Paperwork Reduction Act of 1995, no persons are required to respond to a collection of information unless it displays a valid OMB control number.

PETITION FOR EXTENSION OF TIME UNDER 37 CFR 1.136(a)

Docket Number (Optional)

Application Number 14/120,873 Filed 7/7/2014

For APPARATUS AND METHOD FOR PROVIDING PRODUCT LOCATION INFORMATION TO CUSTOMERS IN A STORE

Art Unit 2876 Examiner —

This is a request under the provisions of 37 CFR 1.136(a) to extend the period for filing a reply in the above-identified application.

The requested extension and fee are as follows (check time period desired and enter the appropriate fee below):

	Fee	Small Entity Fee	Micro Entity Fee	
☐ One month (37 CFR 1.17(a)(1))	$200	$100	$50	$
☒ Two months (37 CFR 1.17(a)(2))	$600	$300	$150	$ 300
☐ Three months (37 CFR 1.17(a)(3))	$1,400	$700	$350	$
☐ Four months (37 CFR 1.17(a)(4))	$2,200	$1,100	$550	$
☐ Five months (37 CFR 1.17(a)(5))	$3,000	$1,500	$750	$

☒ Applicant asserts small entity status. See 37 CFR 1.27.

11/24/2014 APEREZAM 00000002 14120873
06 FC:2252 300.00 OP

☐ Applicant certifies micro entity status. See 37 CFR 1.29.
Form PTO/SB/15A or B or equivalent must either be enclosed or have been submitted previously.

☐ A check in the amount of the fee is enclosed.

☒ Payment by credit card. Form PTO-2038 is attached.

☐ The Director has already been authorized to charge fees in this application to a Deposit Account.

☒ The Director is hereby authorized to charge any fees which may be required, or credit any overpayment, to
~~Deposit Account Number~~ CREDIT CARD IDENTIFIED ON CREDIT CARD PAYMENT FORM.

☐ Payment made via EFS-Web.

WARNING: Information on this form may become public. Credit card information should not be included on this form. Provide credit card information and authorization on PTO-2038.

I am the

☒ applicant.

☐ attorney or agent of record. Registration number _____.

☐ attorney or agent acting under 37 CFR 1.34. Registration number _____.

Signature: [signature] Date: 11/20/14

Typed or printed name: JOHN T. PIENKOS Telephone Number: (262)643-4165

NOTE: This form must be signed in accordance with 37 CFR 1.33. See 37 CFR 1.4 for signature requirements and certifications. Submit multiple forms if more than one signature is required, see below*.

☐ * Total of _____ forms are submitted.

This collection of information is required by 37 CFR 1.136(a). The information is required to obtain or retain a benefit by the public, which is to file (and by the USPTO to process) an application. Confidentiality is governed by 35 U.S.C. 122 and 37 CFR 1.11 and 1.14. This collection is estimated to take 6 minutes to complete, including gathering, preparing, and submitting the completed application form to the USPTO. Time will vary depending upon the individual case. Any comments on the amount of time you require to complete this form and/or suggestions for reducing this burden should be sent to the Chief Information Officer, U.S. Patent and Trademark Office, U.S. Department of Commerce, P.O. Box 1450, Alexandria, VA 22313-1450. DO NOT SEND FEES OR COMPLETED FORMS TO THIS ADDRESS. SEND TO: Mail Stop PCT, Commissioner for Patents, P.O. Box 1450, Alexandria, VA 22313-1450.

RECEIVED
CENTRAL FAX CENTER
NOV 21 2014

UNITED STATES PATENT AND TRADEMARK OFFICE

UNITED STATES DEPARTMENT OF COMMERCE
United States Patent and Trademark Office
Address: COMMISSIONER FOR PATENTS
P.O. Box 1450
Alexandria, Virginia 22313-1450
www.uspto.gov

APPLICATION NUMBER	FILING OR 371(C) DATE	FIRST NAMED APPLICANT	ATTY. DOCKET NO./TITLE
14/120,873	07/07/2014	John T. Pienkos	

CONFIRMATION NO. 2619

FORMALITIES LETTER

John T. Pienkos
10019 N. Miller Ct.
Mequon, WI 53092

OC000000069728387

Date Mailed: 07/21/2014

NOTICE TO FILE MISSING PARTS OF NONPROVISIONAL APPLICATION

FILED UNDER 37 CFR 1.53(b)

Filing Date Granted

Items Required To Avoid Abandonment:

An application number and filing date have been accorded to this application. The item(s) indicated below, however, are missing. Applicant is given **TWO MONTHS** from the date of this Notice within which to file all required items below to avoid abandonment. Extensions of time may be obtained by filing a petition accompanied by the extension fee under the provisions of 37 CFR 1.136(a).

- The statutory basic filing fee is missing.
- The application search fee must be submitted.
- The application examination fee must be submitted.

The application is informal since it does not comply with the regulations for the reason(s) indicated below.

The required item(s) identified below must be timely submitted to avoid abandonment:

- Replacement drawings in compliance with 37 CFR 1.84 and 37 CFR 1.121(d) are required. The drawings submitted are not acceptable because:
  - The drawings must be reasonably free from erasures and must be free from alterations, overwriting, interlineations, folds, and copy marks. See Figure(s) 1, 2B, 3.

Applicant is cautioned that correction of the above items may cause the specification and drawings page count to exceed 100 pages. If the specification and drawings exceed 100 pages, applicant will need to submit the required application size fee.

- Additional claim fees of **$ 210** as a small entity, including any required multiple dependent claim fee, are required. Applicant must submit the additional claim fees or cancel the additional claims for which fees are due.
- Surcharge as set forth in 37 CFR 1.16(f) must be submitted.
  The surcharge is due for any one of:
  - late submission of the basic filing fee, search fee, or examination fee,
  - late submission of inventor's oath or declaration,
  - filing an application that does not contain at least one claim on filing, or
  - submission of an application filed by reference to a previously filed application.

11/24/2014 APEREZAM 00000002 14120873

01	FC:2011	140.00 OP
02	FC:2111	300.00 OP
03	FC:2311	360.00 OP
04	FC:2051	70.00 OP
05	FC:2090	200.00 OP

The PTO did ~~not~~ receive the following listed item(s) 1,370 only

PAGE 12/13 * RCVD AT 11/21/2014 7:49:26 PM [Eastern Standard Time] * SVR:W-PTOFAX-001/31 * DNIS:2738300 * CSID:2626434165 * DURATION (mm-ss):05-48

RECEIVED
CENTRAL FAX CENTER
NOV 2 1 2014

SUMMARY OF FEES DUE:

The fee(s) required within **TWO MONTHS** from the date of this Notice to avoid abandonment is/are itemized below. Small entity discount is in effect. If applicant is qualified for micro entity status, an acceptable Certification of Micro Entity Status must be submitted to establish micro entity status. (See 37 CFR 1.29 and forms PTO/SB/15A and 15B.)

- **$ 140** basic filing fee.
- **$ 200** non-electronic filing fee.
- **$ 70** surcharge.
- **$ 300** search fee.
- **$ 360** examination fee.
- **$ 210** for **1** independent claims over 3.
- $(0) previous unapplied payment amount.
- **$ 1280** TOTAL FEE BALANCE DUE.

Items Required To Avoid Processing Delays:

Applicant is notified that the above-identified application contains the deficiencies noted below. No period for reply is set forth in this notice for correction of these deficiencies. However, if a deficiency relates to the inventor's oath or declaration, the applicant must file an oath or declaration in compliance with 37 CFR 1.63, or a substitute statement in compliance with 37 CFR 1.64, executed by or with respect to each actual inventor no later than the expiration of the time period set in the "Notice of Allowability" to avoid abandonment. See 37 CFR 1.53(f).

- A properly executed inventor's oath or declaration has not been received for the following inventor(s):
  John T. Pienkos

Replies must be received in the USPTO within the set time period or must include a proper Certificate of Mailing or Transmission under 37 CFR 1.8 with a mailing or transmission date within the set time period. For more information and a suggested format, see Form PTO/SB/92 and MPEP 512.

Replies should be mailed to:

Mail Stop Missing Parts
Commissioner for Patents
P.O. Box 1450
Alexandria VA 22313-1450

Registered users of EFS-Web may alternatively submit their reply to this notice via EFS-Web, including a copy of this Notice and selecting the document description "Applicant response to Pre-Exam Formalities Notice". https://sportal.uspto.gov/authenticate/AuthenticateUserLocalEPF.html

For more information about EFS-Web please call the USPTO Electronic Business Center at **1-866-217-9197** or visit our website at http://www.uspto.gov/ebc.

If you are not using EFS-Web to submit your reply, you must include a copy of this notice.

/aabranyos/

Office of Data Management, Application Assistance Unit (571) 272-4000, or (571) 272-4200, or 1-888-786-0101

PAGE 13/13 * RCVD AT 11/21/2014 7:49:26 PM [Eastern Standard Time] * SVR:W-PTOFAX-001/31 * DNIS:2738300 * CSID:2626434165 * DURATION (mm-ss):05-48

PTO/SB/06 (09-11)
Approved for use through 1/31/2014. OMB 0651-0032
U.S. Patent and Trademark Office; U.S. DEPARTMENT OF COMMERCE
Under the Paperwork Reduction Act of 1995, no persons are required to respond to a collection of information unless it displays a valid OMB control number.

PATENT APPLICATION FEE DETERMINATION RECORD

Substitute for Form PTO-875

Application or Docket Number	Filing Date	
14/120,873	07/07/2014	☐ To be Mailed

ENTITY: ☐ LARGE ☒ SMALL ☐ MICRO

APPLICATION AS FILED – PART I

FOR	(Column 1) NUMBER FILED	(Column 2) NUMBER EXTRA	RATE ($)	FEE ($)
☐ BASIC FEE (37 CFR 1.16(a), (b), or (c))	N/A	N/A	N/A	
☐ SEARCH FEE (37 CFR 1.16(k), (i), or (m))	N/A	N/A	N/A	
☐ EXAMINATION FEE (37 CFR 1.16(o), (p), or (q))	N/A	N/A	N/A	
TOTAL CLAIMS (37 CFR 1.16(i))	minus 20 =	*	x $ =	
INDEPENDENT CLAIMS (37 CFR 1.16(h))	minus 3 =	*	x $ =	
☐ APPLICATION SIZE FEE (37 CFR 1.16(s))	If the specification and drawings exceed 100 sheets of paper, the application size fee due is $310 ($155 for small entity) for each additional 50 sheets or fraction thereof. See 35 U.S.C. 41(a)(1)(G) and 37 CFR 1.16(s).			
☐ MULTIPLE DEPENDENT CLAIM PRESENT (37 CFR 1.16(j))				
* If the difference in column 1 is less than zero, enter "0" in column 2.			TOTAL	

APPLICATION AS AMENDED – PART II

AMENDMENT

11/21/2014	(Column 1) CLAIMS REMAINING AFTER AMENDMENT		(Column 2) HIGHEST NUMBER PREVIOUSLY PAID FOR	(Column 3) PRESENT EXTRA	RATE ($)	ADDITIONAL FEE ($)
Total (37 CFR 1.16(i))	* 1	Minus	** 20	= 0	x $40 =	0
Independent (37 CFR 1.16(h))	* 1	Minus	***3	= 0	x $210 =	0
☐ Application Size Fee (37 CFR 1.16(s))						
☐ FIRST PRESENTATION OF MULTIPLE DEPENDENT CLAIM (37 CFR 1.16(j))						
					TOTAL ADD'L FEE	0

AMENDMENT

	(Column 1) CLAIMS REMAINING AFTER AMENDMENT		(Column 2) HIGHEST NUMBER PREVIOUSLY PAID FOR	(Column 3) PRESENT EXTRA	RATE ($)	ADDITIONAL FEE ($)
Total (37 CFR 1.16(i))	*	Minus	**	=	x $ =	
Independent (37 CFR 1.16(h))	*	Minus	***	=	x $ =	
☐ Application Size Fee (37 CFR 1.16(s))						
☐ FIRST PRESENTATION OF MULTIPLE DEPENDENT CLAIM (37 CFR 1.16(j))						
					TOTAL ADD'L FEE	

* If the entry in column 1 is less than the entry in column 2, write "0" in column 3.
** If the "Highest Number Previously Paid For" IN THIS SPACE is less than 20, enter "20".
*** If the "Highest Number Previously Paid For" IN THIS SPACE is less than 3, enter "3".
The "Highest Number Previously Paid For" (Total or Independent) is the highest number found in the appropriate box in column 1.

LIE
/GLORIA ANTHONY/

This collection of information is required by 37 CFR 1.16. The information is required to obtain or retain a benefit by the public which is to file (and by the USPTO to process) an application. Confidentiality is governed by 35 U.S.C. 122 and 37 CFR 1.14. This collection is estimated to take 12 minutes to complete, including gathering, preparing, and submitting the completed application form to the USPTO. Time will vary depending upon the individual case. Any comments on the amount of time you require to complete this form and/or suggestions for reducing this burden, should be sent to the Chief Information Officer, U.S. Patent and Trademark Office, U.S. Department of Commerce, P.O. Box 1450, Alexandria, VA 22313-1450. DO NOT SEND FEES OR COMPLETED FORMS TO THIS ADDRESS. **SEND TO: Commissioner for Patents, P.O. Box 1450, Alexandria, VA 22313-1450.**
If you need assistance in completing the form, call 1-800-PTO-9199 and select option 2.

UNITED STATES PATENT AND TRADEMARK OFFICE

UNITED STATES DEPARTMENT OF COMMERCE
United States Patent and Trademark Office
Address: COMMISSIONER FOR PATENTS
P.O. Box 1450
Alexandria, Virginia 22313-1450
www.uspto.gov

APPLICATION NUMBER	FILING or 371(c) DATE	GRP ART UNIT	FIL FEE REC'D	ATTY.DOCKET.NO	TOT CLAIMS	IND CLAIMS
14/120,873	07/07/2014	2876	1070		1	1

CONFIRMATION NO. 2619

UPDATED FILING RECEIPT

OC000000072127216

John T. Pienkos
10019 N. Miller Ct.
Mequon, WI 53092

Date Mailed: 12/03/2014

Receipt is acknowledged of this non-provisional patent application. The application will be taken up for examination in due course. Applicant will be notified as to the results of the examination. Any correspondence concerning the application must include the following identification information: the U.S. APPLICATION NUMBER, FILING DATE, NAME OF APPLICANT, and TITLE OF INVENTION. Fees transmitted by check or draft are subject to collection. Please verify the accuracy of the data presented on this receipt. **If an error is noted on this Filing Receipt, please submit a written request for a Filing Receipt Correction. Please provide a copy of this Filing Receipt with the changes noted thereon. If you received a "Notice to File Missing Parts" for this application, please submit any corrections to this Filing Receipt with your reply to the Notice. When the USPTO processes the reply to the Notice, the USPTO will generate another Filing Receipt incorporating the requested corrections**

Inventor(s)

John T. Pienkos, Mequon, WI;

Applicant(s)

John T. Pienkos, Mequon, WI;

Power of Attorney: None

Domestic Priority data as claimed by applicant

This application is a CON of 13/815,667 03/14/2013 PAT 8787933
which is a CON of 12/924,740 10/04/2010 PAT 8775260
which is a DIV of 11/707,842 02/19/2007 PAT 7819315
which is a CON of 09/626,365 07/23/2000 PAT 7231380
which claims benefit of 60/158,444 10/09/1999

Foreign Applications for which priority is claimed (You may be eligible to benefit from the **Patent Prosecution Highway** program at the USPTO. Please see http://www.uspto.gov for more information.) - None.
Foreign application information must be provided in an Application Data Sheet in order to constitute a claim to foreign priority. See 37 CFR 1.55 and 1.76.

If Required, Foreign Filing License Granted: 07/21/2014
The country code and number of your priority application, to be used for filing abroad under the Paris Convention, is **US 14/120,873**
Projected Publication Date: Request for Non-Publication Acknowledged
Non-Publication Request: Yes
Early Publication Request: No
**** SMALL ENTITY ****

Title

APPARATUS AND METHOD FOR PROVIDING PRODUCT LOCATION INFORMATION TO CUSTOMERS IN A STORE

Preliminary Class

235

Statement under 37 CFR 1.55 or 1.78 for AIA (First Inventor to File) Transition Applications: No

PROTECTING YOUR INVENTION OUTSIDE THE UNITED STATES

Since the rights granted by a U.S. patent extend only throughout the territory of the United States and have no effect in a foreign country, an inventor who wishes patent protection in another country must apply for a patent in a specific country or in regional patent offices. Applicants may wish to consider the filing of an international application under the Patent Cooperation Treaty (PCT). An international (PCT) application generally has the same effect as a regular national patent application in each PCT-member country. The PCT process **simplifies** the filing of patent applications on the same invention in member countries, but **does not result** in a grant of "an international patent" and does not eliminate the need of applicants to file additional documents and fees in countries where patent protection is desired.

Almost every country has its own patent law, and a person desiring a patent in a particular country must make an application for patent in that country in accordance with its particular laws. Since the laws of many countries differ in various respects from the patent law of the United States, applicants are advised to seek guidance from specific foreign countries to ensure that patent rights are not lost prematurely.

Applicants also are advised that in the case of inventions made in the United States, the Director of the USPTO must issue a license before applicants can apply for a patent in a foreign country. The filing of a U.S. patent application serves as a request for a foreign filing license. The application's filing receipt contains further information and guidance as to the status of applicant's license for foreign filing.

Applicants may wish to consult the USPTO booklet, "General Information Concerning Patents" (specifically, the section entitled "Treaties and Foreign Patents") for more information on timeframes and deadlines for filing foreign patent applications. The guide is available either by contacting the USPTO Contact Center at 800-786-9199, or it can be viewed on the USPTO website at http://www.uspto.gov/web/offices/pac/doc/general/index.html.

For information on preventing theft of your intellectual property (patents, trademarks and copyrights), you may wish to consult the U.S. Government website, http://www.stopfakes.gov. Part of a Department of Commerce initiative, this website includes self-help "toolkits" giving innovators guidance on how to protect intellectual property in specific countries such as China, Korea and Mexico. For questions regarding patent enforcement issues, applicants may call the U.S. Government hotline at 1-866-999-HALT (1-866-999-4258).

LICENSE FOR FOREIGN FILING UNDER

Title 35, United States Code, Section 184

Title 37, Code of Federal Regulations, 5.11 & 5.15

GRANTED

The applicant has been granted a license under 35 U.S.C. 184, if the phrase "IF REQUIRED, FOREIGN FILING LICENSE GRANTED" followed by a date appears on this form. Such licenses are issued in all applications where the conditions for issuance of a license have been met, regardless of whether or not a license may be required as set forth in 37 CFR 5.15. The scope and limitations of this license are set forth in 37 CFR 5.15(a) unless an earlier license has been issued under 37 CFR 5.15(b). The license is subject to revocation upon written notification. The date indicated is the effective date of the license, unless an earlier license of similar scope has been granted under 37 CFR 5.13 or 5.14.

This license is to be retained by the licensee and may be used at any time on or after the effective date thereof unless it is revoked. This license is automatically transferred to any related applications(s) filed under 37 CFR 1.53(d). This license is not retroactive.

The grant of a license does not in any way lessen the responsibility of a licensee for the security of the subject matter as imposed by any Government contract or the provisions of existing laws relating to espionage and the national security or the export of technical data. Licensees should apprise themselves of current regulations especially with respect to certain countries, of other agencies, particularly the Office of Defense Trade Controls, Department of State (with respect to Arms, Munitions and Implements of War (22 CFR 121-128)); the Bureau of Industry and Security, Department of Commerce (15 CFR parts 730-774); the Office of Foreign AssetsControl, Department of Treasury (31 CFR Parts 500+) and the Department of Energy.

NOT GRANTED

No license under 35 U.S.C. 184 has been granted at this time, if the phrase "IF REQUIRED, FOREIGN FILING LICENSE GRANTED" DOES NOT appear on this form. Applicant may still petition for a license under 37 CFR 5.12, if a license is desired before the expiration of 6 months from the filing date of the application. If 6 months has lapsed from the filing date of this application and the licensee has not received any indication of a secrecy order under 35 U.S.C. 181, the licensee may foreign file the application pursuant to 37 CFR 5.15(b).

SelectUSA

The United States represents the largest, most dynamic marketplace in the world and is an unparalleled location for business investment, innovation, and commercialization of new technologies. The U.S. offers tremendous resources and advantages for those who invest and manufacture goods here. Through SelectUSA, our nation works to promote and facilitate business investment. SelectUSA provides information assistance to the international investor community; serves as an ombudsman for existing and potential investors; advocates on behalf of U.S. cities, states, and regions competing for global investment; and counsels U.S. economic development organizations on investment attraction best practices. To learn more about why the United States is the best country in the world to develop technology, manufacture products, deliver services, and grow your business, visit http://www.SelectUSA.gov or call +1-202-482-6800.

UNITED STATES PATENT AND TRADEMARK OFFICE

UNITED STATES DEPARTMENT OF COMMERCE
United States Patent and Trademark Office
Address: COMMISSIONER FOR PATENTS
P.O. Box 1450
Alexandria, Virginia 22313-1450
www.uspto.gov

APPLICATION NUMBER	FILING OR 371(C) DATE	FIRST NAMED APPLICANT	ATTY. DOCKET NO./TITLE
14/120,873	07/07/2014	John T. Pienkos	

CONFIRMATION NO. 2619

John T. Pienkos
10019 N. Miller Ct.
Mequon, WI 53092

NOTICE

OC000000072127217

Date Mailed: 12/03/2014

INFORMATIONAL NOTICE TO APPLICANT

Applicant is notified that the above-identified application contains the deficiencies noted below. No period for reply is set forth in this notice for correction of these deficiencies. However, if a deficiency relates to the inventor's oath or declaration, the applicant must file an oath or declaration in compliance with 37 CFR 1.63, or a substitute statement in compliance with 37 CFR 1.64, executed by or with respect to each actual inventor no later than the expiration of the time period set in the "Notice of Allowability" to avoid abandonment. See 37 CFR 1.53(f).

The item(s) indicated below are also required and should be submitted with any reply to this notice to avoid further processing delays.

- A properly executed inventor's oath or declaration has not been received for the following inventor(s):
  John T. Pienkos

PATENT APPLICATION FEE DETERMINATION RECORD

Substitute for Form PTO-875

Application or Docket Number
14/120,873

APPLICATION AS FILED - PART I

FOR	(Column 1) NUMBER FILED	(Column 2) NUMBER EXTRA	SMALL ENTITY RATE($)	SMALL ENTITY FEE($)	OR	OTHER THAN SMALL ENTITY RATE($)	OTHER THAN SMALL ENTITY FEE($)
BASIC FEE (37 CFR 1.16(a), (b), or (c))	N/A	N/A	N/A	140		N/A	
SEARCH FEE (37 CFR 1.16(k), (i), or (m))	N/A	N/A	N/A	300		N/A	
EXAMINATION FEE (37 CFR 1.16(o), (p), or (q))	N/A	N/A	N/A	360		N/A	
TOTAL CLAIMS (37 CFR 1.16(i))	1 minus 20 =	*	x 40 =	0.00	OR		
INDEPENDENT CLAIMS (37 CFR 1.16(h))	1 minus 3 =	*	x 210 =	0.00			
APPLICATION SIZE FEE (37 CFR 1.16(s))	If the specification and drawings exceed 100 sheets of paper, the application size fee due is $310 ($155 for small entity) for each additional 50 sheets or fraction thereof. See 35 U.S.C. 41(a)(1)(G) and 37 CFR 1.16(s).			0.00			
MULTIPLE DEPENDENT CLAIM PRESENT (37 CFR 1.16(j))				0.00			
* If the difference in column 1 is less than zero, enter "0" in column 2.			TOTAL	800		TOTAL	

APPLICATION AS AMENDED - PART II

		(Column 1) CLAIMS REMAINING AFTER AMENDMENT		(Column 2) HIGHEST NUMBER PREVIOUSLY PAID FOR	(Column 3) PRESENT EXTRA	SMALL ENTITY RATE($)	SMALL ENTITY ADDITIONAL FEE($)	OR	OTHER THAN SMALL ENTITY RATE($)	OTHER THAN SMALL ENTITY ADDITIONAL FEE($)
AMENDMENT A	Total (37 CFR 1.16(i))	*	Minus	**	=	x =		OR	x =	
AMENDMENT A	Independent (37 CFR 1.16(h))	*	Minus	***	=	x =		OR	x =	
AMENDMENT A	Application Size Fee (37 CFR 1.16(s))									
AMENDMENT A	FIRST PRESENTATION OF MULTIPLE DEPENDENT CLAIM (37 CFR 1.16(j))							OR		
						TOTAL ADD'L FEE		OR	TOTAL ADD'L FEE	

		(Column 1) CLAIMS REMAINING AFTER AMENDMENT		(Column 2) HIGHEST NUMBER PREVIOUSLY PAID FOR	(Column 3) PRESENT EXTRA	RATE($)	ADDITIONAL FEE($)		RATE($)	ADDITIONAL FEE($)
AMENDMENT B	Total (37 CFR 1.16(i))	*	Minus	**	=	x =		OR	x =	
AMENDMENT B	Independent (37 CFR 1.16(h))	*	Minus	***	=	x =		OR	x =	
AMENDMENT B	Application Size Fee (37 CFR 1.16(s))									
AMENDMENT B	FIRST PRESENTATION OF MULTIPLE DEPENDENT CLAIM (37 CFR 1.16(j))							OR		
						TOTAL ADD'L FEE		OR	TOTAL ADD'L FEE	

* If the entry in column 1 is less than the entry in column 2, write "0" in column 3.
** If the "Highest Number Previously Paid For" IN THIS SPACE is less than 20, enter "20".
*** If the "Highest Number Previously Paid For" IN THIS SPACE is less than 3, enter "3".
The "Highest Number Previously Paid For" (Total or Independent) is the highest found in the appropriate box in column 1.

UNITED STATES PATENT AND TRADEMARK OFFICE

UNITED STATES DEPARTMENT OF COMMERCE
United States Patent and Trademark Office
Address: COMMISSIONER FOR PATENTS
P.O. Box 1450
Alexandria, Virginia 22313-1450
www.uspto.gov

APPLICATION NO.	FILING DATE	FIRST NAMED INVENTOR	ATTORNEY DOCKET NO.	CONFIRMATION NO.
14/120,873	07/07/2014	John T. Pienkos		2619

7590 09/30/2015

John T. Pienkos
10019 N. Miller Ct.
Mequon, WI 53092

EXAMINER
RUDY, ANDREW J

ART UNIT	PAPER NUMBER
3687	

MAIL DATE	DELIVERY MODE
09/30/2015	PAPER

Please find below and/or attached an Office communication concerning this application or proceeding.

The time period for reply, if any, is set in the attached communication.

Office Action Summary	Application No. 14/120,873	Applicant(s) PIENKOS, JOHN T.	
	Examiner ANDREW JOSEPH RUDY	Art Unit 3687	AIA (First Inventor to File) Status No

-- The MAILING DATE of this communication appears on the cover sheet with the correspondence address --

Period for Reply

A SHORTENED STATUTORY PERIOD FOR REPLY IS SET TO EXPIRE 3 MONTHS FROM THE MAILING DATE OF THIS COMMUNICATION.

- Extensions of time may be available under the provisions of 37 CFR 1.136(a). In no event, however, may a reply be timely filed after SIX (6) MONTHS from the mailing date of this communication.
- If NO period for reply is specified above, the maximum statutory period will apply and will expire SIX (6) MONTHS from the mailing date of this communication.
- Failure to reply within the set or extended period for reply will, by statute, cause the application to become ABANDONED (35 U.S.C. § 133). Any reply received by the Office later than three months after the mailing date of this communication, even if timely filed, may reduce any earned patent term adjustment. See 37 CFR 1.704(b).

Status

1)☒ Responsive to communication(s) filed on *21 November 2014*.

☐ A declaration(s)/affidavit(s) under **37 CFR 1.130(b)** was/were filed on _____.

2a)☐ This action is **FINAL**. 2b)☒ This action is non-final.

3)☐ An election was made by the applicant in response to a restriction requirement set forth during the interview on _____; the restriction requirement and election have been incorporated into this action.

4)☐ Since this application is in condition for allowance except for formal matters, prosecution as to the merits is closed in accordance with the practice under *Ex parte Quayle*, 1935 C.D. 11, 453 O.G. 213.

Disposition of Claims*

5)☒ Claim(s) *20* is/are pending in the application.

5a) Of the above claim(s) _____ is/are withdrawn from consideration.

6)☐ Claim(s) _____ is/are allowed.

7)☒ Claim(s) *20* is/are rejected.

8)☐ Claim(s) _____ is/are objected to.

9)☐ Claim(s) _____ are subject to restriction and/or election requirement.

* If any claims have been determined allowable, you may be eligible to benefit from the **Patent Prosecution Highway** program at a participating intellectual property office for the corresponding application. For more information, please see http://www.uspto.gov/patents/init_events/pph/index.jsp or send an inquiry to PPHfeedback@uspto.gov.

Application Papers

10)☐ The specification is objected to by the Examiner.

11)☐ The drawing(s) filed on _____ is/are: a)☐ accepted or b)☐ objected to by the Examiner.

Applicant may not request that any objection to the drawing(s) be held in abeyance. See 37 CFR 1.85(a).

Replacement drawing sheet(s) including the correction is required if the drawing(s) is objected to. See 37 CFR 1.121(d).

Priority under 35 U.S.C. § 119

12)☐ Acknowledgment is made of a claim for foreign priority under 35 U.S.C. § 119(a)-(d) or (f).

Certified copies:

a)☐ All b)☐ Some** c)☐ None of the:

1.☐ Certified copies of the priority documents have been received.

2.☐ Certified copies of the priority documents have been received in Application No. _____.

3.☐ Copies of the certified copies of the priority documents have been received in this National Stage application from the International Bureau (PCT Rule 17.2(a)).

** See the attached detailed Office action for a list of the certified copies not received.

Attachment(s)

1) ☒ Notice of References Cited (PTO-892)

2) ☐ Information Disclosure Statement(s) (PTO/SB/08a and/or PTO/SB/08b) Paper No(s)/Mail Date _____.

3) ☐ Interview Summary (PTO-413) Paper No(s)/Mail Date. _____ .

4) ☐ Other: _____.

DETAILED ACTION

Notice of Pre-AIA or AIA Status

1. The present application is being examined under the pre-AIA first to invent provisions.

2. Applicant cancelled claims 1-19. Claim 20 is pending.

Claim Rejections - 35 USC § 101

3. 35 U.S.C. 101 reads as follows:

> Whoever invents or discovers any new and useful process, machine, manufacture, or composition of matter, or any new and useful improvement thereof, may obtain a patent therefor, subject to the conditions and requirements of this title.

4. Claim 20 is rejected under 35 U.S.C. 101 because the claimed invention is directed towards non-statutory subject matter because the claim(s) as a whole, considering all claim elements both individually and in combination, do not amount to significantly more than an abstract idea. The claim(s) is/are directed to the abstract idea of a providing product location. The additional elements or combination of elements in the claim(s) other than the abstract idea per se amount(s) to no more than using computer technology to provide common knowledge product location within a store. Viewed as a whole, these additional claim elements do not provide meaningful limitation(s) to transform the abstract idea into a patent eligible application of the abstract idea such that the claim(s) amounts to significantly more than the abstract idea itself. Therefore, the claims(s) are rejected under 35 U.S.C. 101 as being directed to

non-statutory subject matter. See, Alice Corporation Pty. Ltd. v. CLS Bank International, et al., 573 U. S. ___ (2014).

Claim Rejections - 35 USC § 103

5. The following is a quotation of pre-AIA 35 U.S.C. 103(a) which forms the basis for all obviousness rejections set forth in this Office action:

> (a) A patent may not be obtained though the invention is not identically disclosed or described as set forth in section 102 of this title, if the differences between the subject matter sought to be patented and the prior art are such that the subject matter as a whole would have been obvious at the time the invention was made to a person having ordinary skill in the art to which said subject matter pertains. Patentability shall not be negatived by the manner in which the invention was made.

6. Claim 20 is rejected under pre-AIA 35 U.S.C. 103(a) as being unpatentable over Berstis, US 7,010,498.

Berstis discloses, e.g. Figs. 1A-5 and related text, a plurality of devices, e.g. shopping aid locater unit 13 (may be a palmtop computer), processing means, e.g. 4, 6, 8, 12, a shelf unit, e.g. 201 in a store, a database, e.g. memory, 307, 309, an infrared (IR) light having digital signals. Berstis does not explicitly recite the language of a product location information signal in response to a product location inquiry signal. However, Berstis discloses, e.g. cols. 8-10, lines 34-59, an ID card reader that generates product location data. Official Notice is taken that inquiry signals have been common knowledge in the computer art. To have provided product inquiry signals for Berstis would have been obvious to one of ordinary skill in the art. The motivation for having done such would have been to incorporate well known inquiry signals in conjunction with the modulated IR signals, e.g. col. 10, lines 1-15, of Berstis to locate products within a store.

7. Further pertinent references of interest are noted on the attached PTO-892.

8. Any inquiry concerning this communication or earlier communications from the examiner should be directed to ANDREW JOSEPH RUDY whose telephone number is (571)272-6789. The examiner can normally be reached on Monday thru Friday. Information regarding the status of an application may be obtained from the Patent Application Information Retrieval (PAIR) system. Status information for published applications may be obtained from either Private PAIR or Public PAIR.

Status information for unpublished applications is available through Private PAIR only. For more information about the PAIR system, see http://pair-direct.uspto.gov. Should you have questions on access to the Private PAIR system, contact the Electronic Business Center (EBC) at 866-217-9197 (toll-free). If you would like assistance from a USPTO Customer Service Representative or access to the automated information system, call 800-786-9199 (IN USA OR CANADA) or 571-272-1000.

/ANDREW JOSEPH RUDY/

Primary Examiner

Art Unit 3687

Notice of References Cited	Application/Control No. 14/120,873	Applicant(s)/Patent Under Reexamination PIENKOS, JOHN T.	
	Examiner ANDREW JOSEPH RUDY	Art Unit 3687	Page 1 of 1

U.S. PATENT DOCUMENTS

*		Document Number Country Code-Number-Kind Code	Date MM-YYYY	Name	CPC Classification	US Classification
*	A	US-8,170,915 B2	05-2012	Borders; Louis H.	G06Q10/0631	705/26.9
*	B	US-8,156,026 B2	04-2012	Junger; Peter J.	G06Q10/0833	705/35
*	C	US-7,346,564 B1	03-2008	Kirklin; Frederic J	G06Q10/087	705/26.1
*	D	US-7,231,380 B1	06-2007	Pienkos; John Thaddeus	G06Q10/087	1/1
*	E	US-7,010,498 B1	03-2006	Berstis; Viktors	G06Q10/087	705/14.36
*	F	US-6,604,681 B1	08-2003	Burke; Raymond R.	B62B3/1424	235/379
*	G	US-6,507,352 B1	01-2003	Cohen; Sally M.	G06F1/181	705/16
*	H	US-6,484,149 B1	11-2002	Jammes; Pierre J.	G06F17/3089	705/26.62
*	I	US-6,442,530 B1	08-2002	Miller; Steven D.	G06Q10/087	705/16
*	J	US-6,179,206 B1	01-2001	Matsumori; Kunihiko	G06Q20/343	235/375
	K	US-				
	L	US-				
	M	US-				

FOREIGN PATENT DOCUMENTS

*		Document Number Country Code-Number-Kind Code	Date MM-YYYY	Country	Name	CPC Classification
	N					
	O					
	P					
	Q					
	R					
	S					
	T					

NON-PATENT DOCUMENTS

*		Include as applicable: Author, Title Date, Publisher, Edition or Volume, Pertinent Pages)
	U	
	V	
	W	
	X	

*A copy of this reference is not being furnished with this Office action. (See MPEP § 707.05(a).)
Dates in MM-YYYY format are publication dates. Classifications may be US or foreign.

Search Notes	Application/Control No.	Applicant(s)/Patent under Reexamination
	14/120,873	PIENKOS, JOHN T.
	Examiner	**Art Unit**
	ANDREW JOSEPH RUDY	3687

SEARCHED			
Class	Subclass	Date	Examiner
705	26.1, 26.9	9/24/2015	AJR

INTERFERENCE SEARCHED			
Class	Subclass	Date	Examiner

SEARCH NOTES (INCLUDING SEARCH STRATEGY)		
	DATE	EXMR
Continuity data reviewed.	9/24/2015	AJR
Inventor name search conducted.	9/24/2015	AJR
Bibliographic data updated.	9/25/2015	AJR

UNITED STATES PATENT AND TRADEMARK OFFICE

UNITED STATES DEPARTMENT OF COMMERCE
United States Patent and Trademark Office
Address: COMMISSIONER FOR PATENTS
P.O. Box 1450
Alexandria, Virginia 22313-1450
www.uspto.gov

BIB DATA SHEET

CONFIRMATION NO. 2619

SERIAL NUMBER	FILING or 371(c) DATE	CLASS	GROUP ART UNIT	ATTORNEY DOCKET NO.
14/120,873	07/07/2014 RULE	705	3687	

APPLICANTS

INVENTORS

John T. Pienkos, Mequon, WI;

**** CONTINUING DATA ***************************

This application is a CON of 13/815,667 03/14/2013 PAT 8787933
which is a CON of 12/924,740 10/04/2010 PAT 8775260
which is a DIV of 11/707,842 02/19/2007 PAT 7819315
which is a CON of 09/626,365 07/23/2000 PAT 7231380
which claims benefit of 60/158,444 10/09/1999

**** FOREIGN APPLICATIONS ****************************

**** IF REQUIRED, FOREIGN FILING LICENSE GRANTED **** ** SMALL ENTITY **
07/21/2014

Foreign Priority claimed	☐ Yes ☑ No		STATE OR COUNTRY	SHEETS DRAWINGS	TOTAL CLAIMS	INDEPENDENT CLAIMS
35 USC 119(a-d) conditions met	☐ Yes ☑ No	☐ Met after Allowance	WI	3	1	1
Verified and Acknowledged	/ANDREW JOSEPH RUDY/ Examiner's Signature	Initials				

ADDRESS

John T. Pienkos
10019 N. Miller Ct.
Mequon, WI 53092
UNITED STATES

TITLE

APPARATUS AND METHOD FOR PROVIDING PRODUCT LOCATION INFORMATION TO CUSTOMERS IN A STORE

FILING FEE RECEIVED		
1070	FEES: Authority has been given in Paper No._____ to charge/credit DEPOSIT ACCOUNT No._____ for following:	☐ All Fees ☐ 1.16 Fees (Filing) ☐ 1.17 Fees (Processing Ext. of time) ☐ 1.18 Fees (Issue) ☐ Other _____ ☐ Credit

RECEIVED
CENTRAL FAX CENTER

MAR 3 0 2016

I hereby certify that this correspondence is being transmitted by facsimile to the United States Patent Office, at (571) 273-8300. Date and Signature of transmittal: March 30, 2016

IN THE UNITED STATES PATENT AND TRADEMARK OFFICE

Applicant: Pienkos, John T.

Serial No.: 14/120,873

Filing Date: July 7, 2014

Title: APPARATUS AND METHOD FOR PROVIDING PRODUCT LOCATION INFORMATION TO CUSTOMERS IN A STORE

Art Unit: 2876

AMENDMENT

Commissioner for Patents
P.O. Box 1450
Alexandria, VA 22313-1450

Dear Sir:

The Applicant respectfully submits the following amendments and remarks as a response to the Office action dated September 30, 2015:

Amendments to the claims are reflected in the listing of claims that begins on page 2 of this paper.

Remarks begin on page 4 of this paper.

Amendments to the Claims

This listing of claims will replace all prior versions, and listings, of claims in the Application:

Listing of Claims:

1.-19. (Cancelled).

20. (Currently Amended) A method of providing product location information within a store, the method comprising the steps of:

~~affixing at least a first input device at a first location within the store;~~

providing a plurality of devices including a mobile device, wherein the plurality of devices are in communication with one another, wherein at least one of the devices includes at least one user interface, and wherein at least one of the devices includes at least one information storage device including a database,

wherein the at least one information storage device includes both product location information and additional product-related information linking a product with an other product in a cross-referential manner;

~~obtaining~~ receiving a product location inquiry regarding the product by way of the at least one user interface ~~at the first input device~~;

processing the product location inquiry at a signal processing device to determine a product location inquiry signal;

querying ~~a database~~ the at least one information storage device to obtain portions of the product location information and additional product-related information in response to the product location inquiry signal;

PAGE 5/16 * RCVD AT 3/30/2016 4:20:32 PM [Eastern Daylight Time] * SVR:W-PTOFAX-003/11 * DNIS:2738300 * CSID: * DURATION (mm-ss):04-23

providing a product location information signal in response to the product location inquiry signal;

providing an output signal at an output device, the output signal being a response to the product location inquiry, wherein the output signal includes location information concerning the product and also provides at least one suggestion related to the other product.

21. (New) The method of claim 20,

wherein the at least one user interface includes a mobile user interface and the mobile user interface is capable of determining a position of the mobile user interface within the store based upon a global positioning system (GPS) or other position-sensing capability.

PAGE 6/16 * RCVD AT 3/30/2016 4:20:32 PM [Eastern Daylight Time] * SVR:W-PTOFAX-003/11 * DNIS:2738300 * CSID: * DURATION (mm-ss):04-23

RECEIVED
CENTRAL FAX CENTER
MAR 3 0 2016

REMARKS/ARGUMENTS

The Applicant appreciates the Examiner's consideration of the present Application.

In the Office action dated September 30, 2015, claim 20 was rejected under 35 U.S.C. 101 and also under 35 U.S.C. 103 in view of Berstis (U.S. Patent No. 7,010,498).

In response to the Office action, the Applicant has amended claim 20 and also added new claim 21 as shown above and discussed further below. For at least the reasons set forth below, the Applicant submits that the rejections of claim 20 are overcome and that claims 20-21 are now all in condition for allowance.

Amendments to Claims

The Applicant has amended claim 20 in several manners. In addition to deleting certain language from claim 20, the Applicant has also amended claim 20 to recite "providing a plurality of devices including a mobile device, wherein the plurality of devices are in communication with one another, wherein at least one of the devices includes at least one user interface, and wherein at least one of the devices includes at least one information storage device including a database." The Applicant respectfully submits that this language finds support in the present Application at, for example, sections corresponding to column 5, lines 5-34, col. 6, lines 23-52, col. 11, lines 25-29, and col. 14, line 51 through col. 15, line 10 of U.S. Patent No. 7,231,380 ("the '380 patent"), to which the present Application claims priority, and which is referred to herein to facilitate locating pertinent support information.

Further, claim 20 also has been amended to state that "the at least one information storage device includes both product location information and additional product-related information linking a product with an other product in a cross-referential manner". It is believed that this

PAGE 7/16 * RCVD AT 3/30/2016 4:20:32 PM [Eastern Daylight Time] * SVR:W-PTOFAX-003/11 * DNIS:2738300 * CSID: * DURATION (mm-ss):04-23

language finds support in the present Application for example at sections corresponding to col. 5, lines 24-46, col. 9, lines 20-65, and col. 15, lines 35-48, as well as claims 1 and 5, of the '380 patent.

Also, claim 20 has been amended to recite receiving a product location inquiry "regarding the product by way of the at least one user interface." Further, claim 20 has been amended to recite querying "the at least one information storage device to obtain portions of the product location information and additional product-related information in response to the product location inquiry signal". It is believed that this language finds support in the present Application for example at sections corresponding to col. 11, lines 29-43 and col. 12, lines 1-59 of the '380 patent.

Additionally, claim 20 also has been amended to recite that "the output signal includes location information concerning the product and also provides at least one suggestion related to the other product." It is respectfully submitted that this language finds support in the present Application for example at sections corresponding to col. 15, lines 35-48, col. 5, line 47 through col. 6, line 52, col. 9, lines 20-65, and col. 14, lines 23-63, as well as claim 13, of the '380 patent.

As for new dependent claim 21, the Applicant respectfully submits that the language of this claim finds support in the present Application for example at sections corresponding to col. 14, lines 63-66.

Given that it is believed that the aforementioned amendments to the claims do not involve the addition of new matter to the present Application, the Applicant respectfully requests entry and consideration of these amended claims.

PAGE 8/16 * RCVD AT 3/30/2016 4:20:32 PM [Eastern Daylight Time] * SVR:W-PTOFAX-003/11 * DNIS:2738300 * CSID: * DURATION (mm-ss):04-23

Allowability of Independent Claim 20 Under 35 U.S.C. 101

The Applicant respectfully submits that independent claim 20 as amended should be allowable under 35 U.S.C. 101, for at least several reasons as follows.

1) Claimed Features of Independent Claim 20 Are Not Abstract on Their Face

The Applicant submits that independent claim 20 as amended recites numerous features or interaction with features that are not abstract. These include, for example, "plurality of devices", a "mobile device", "at least one user interface", "at least one information storage device", a "database", and a "signal processing device". The Applicant submits that these claimed features relate to specific components with concrete and unique features, and cannot be neglected. The claimed features certainly are not merely related to generic computers but rather involve complex interactions among specialized computers that are particularly configured to perform the special operations set forth in the claims.

2) Combination of Features of Claim 20 Is Significantly More Than Abstract

In response to the Examiner's contention that "[t]he claimed invention is directed towards non-statutory subject matter because the claim(s) as a whole, considering all claim elements both individually and in combination, do not amount to significantly more than an abstract idea", the Applicant strongly disagrees. The Applicant particularly submits that any claim can be generalized or summarized, or paraphrased or oversimplified, so as to effectively eliminate specific claimed features until the claim may appear to be abstract. Such oversimplification of the claim and effective redaction of the specific recited claim features is improper. To the contrary, Section 2106 of the MPEP makes it clear that, in considering the abstractness of a claim, the claim should be

PAGE 9/16 * RCVD AT 3/30/2016 4:20:32 PM [Eastern Daylight Time] * SVR:W-PTOFAX-003/11 * DNIS:2738300 * CSID: * DURATION (mm-ss):04-23 Home Depot
Ex. 1003 - Page 89

analyzed in a manner that involves the consideration of all claim elements, "both individually and as an ordered combination . . . ."

Further, with respect to claim 20 as amended, the Applicant respectfully submits that the combination of the features of claim 20 constitutes a specific and carefully-arranged set of features that are particularly suitable for facilitating providing product location information within a store in response to a product location inquiry, in combination with the providing of a suggestion related to another product as well. Because claim 20 as currently amended constitutes an ordered combination concerning a well-defined manner of providing a combination of product location information concerning one product and a at least one suggestion concerning another product, claim 20 clearly recites something that is significantly more than an abstract idea and should therefore be allowable under 35 U.S.C. 101.

3) Claim 20 Not Preemptive of Field

As amended, claim 20 is not at all preemptive of any field of computer or internet-implemented retail information distribution methods. Rather, the method of claim 20 is specifically tailored to a process of facilitating the providing of product location information within a store in regard to a customer inquiry concerning a given product, and the providing of at least one suggestion related to another product. Thus, many other computer or internet-implemented retail information distribution methods are not preempted by the recited method of claim 20, including for example retail information distribution methods that merely output product location information concerning the location of a product in response to a customer inquiry concerning that specific product but that fail to provide any additional suggestion concerning another product. The Applicant respectfully submits that this non-preemptive nature of claim 20 is consistent with claim 20 being subject matter eligible under 35 U.S.C. 101.

PAGE 10/16 * RCVD AT 3/30/2016 4:20:32 PM [Eastern Daylight Time] * SVR:W-PTOFAX-003/11 * DNIS:2738300 * CSID: * DURATION (mm-ss):04-23

4) Claim 20 Represents an Advance in a Technical Field

Although the features of claim 20 do not preempt the field of computer or internet-implemented retail information distribution methods, claim 20 is intended to recite a method concerning a technical advance in the technical field of retail information distribution methods. Indeed, claim 20 recites a method that operates in a very specific manner so as to facilitate not only the providing of product location information regarding the location of a product that is specifically inquired about by a customer, but also to allow for at least one suggestion to be provided to the customer regarding another product. This specific manner of operation not only allows a customer to be provided with information that the customer originally sought, but also allows a customer to be provided with other information that may be helpful to the customer in view of the customer's original production location inquiry. Because independent claim 20 is intended to relate to a technical advance in a technical field, the claim should be considered to be subject matter eligible under 35 U.S.C. 101.

For at least the above reasons, therefore, the Applicant respectfully submits that amended independent claim 20 should be allowable under 35 U.S.C. 101.

Allowability of Dependent Claim 21 Under 35 U.S.C. 101

The Applicant also submits that claim 21 is allowable under 35 U.S.C. 101 for at least the same reasons as claim 20 is allowable as set forth above. Further, the Applicant submits that claim 21 should additionally be allowable under 35 U.S.C. 101 given that further non-abstract features are recited in that claim.

PAGE 11/16 * RCVD AT 3/30/2016 4:20:32 PM [Eastern Daylight Time] * SVR:W-PTOFAX-003/11 * DNIS:2738300 * CSID: * DURATION (mm-ss):04-23

Allowability of Independent Claim 20 Under 35 U.S.C. 103

The Applicant respectfully submits that independent claim 20 as amended should be allowable under 35 U.S.C. 103 over Berstis, for at least several reasons as follows.

1) Receiving Product Location Inquiry

The Applicant respectfully submits that independent claim 20 recites a method that is particularly focused upon providing product location information specifically in response to a particular customer inquiry regarding the location of a product. As shown above, claim 20 particularly recites "receiving a product location inquiry regarding the product by way of at least one user interface."

In contrast to this manner of operation, as best as the Applicant has determined, Berstis concerns different types of methods of operation. More particularly, as best as the Applicant has determined, Berstis relates to methods of assisting customers find products that have been identified in manners that do not involve customers specifically inquiring about specific products' locations. For example, at col. 7, lines 59-62, it appears that Berstis describes a methodology in which items of interest to a customer are specified based upon downloaded coupons ("[a] user could easily log on to the Internet, get his desired discount coupons, download and store them on the palmtop computer prior to heading off to the store"). Also for example, at col. 8, lines 49-52, it appears that Berstis describes a methodology in which items of interest to a customer have been pre-programmed ("[a] customer with a portable IR receiver is alerted to the presence and/or location of desired products which have been pre-programmed into the portable IR receiver").

In view of these excerpts from Berstis, it appears to the Applicant that Berstis is directed to methodologies in which, to the extent product location information is provided to a customer, the product location information is provided as a result of reasons

PAGE 12/16 * RCVD AT 3/30/2016 4:20:32 PM [Eastern Daylight Time] * SVR:IW-PTOFAX-003/11 * DNIS:2738300 * CSID: * DURATION (mm-ss):04-23

other than the customer providing an inquiry signal requesting the location of a specific product of interest. The Applicant respectfully submits that, to the extent this is accurate, this constitutes a significant difference between Berstis and the Applicant's claim 20.

The Applicant does note that, in the Office action, it is stated that "Official Notice is taken that inquiry signals knowledge in the computer art. To have provided product inquiry signals for Berstis would have been obvious to one of ordinary skill in the art." Yet the Applicant respectfully disagrees with this contention. Not only has the Office action not provided support for this contention, but also the Applicant respectfully submits that, given the particular teachings of Berstis, it would not have been obvious to one of ordinary skill in the art to modify Berstis to arrive at the Applicant's claim 20.

Indeed, the Applicant submits that the aforementioned excerpts of Berstis provide an indication that Berstis is teaching away from the manner of operation recited in the Applicant's claim 20. Rather than facilitating the providing of product location information substantially in real time to customers when they are in stores and have particular needs for such information, Berstis instead teaches helping customers locate products that have been pre-determined as being of interest prior to the customers having entered the stores, e.g., as part of a process of coupon entry (see, e.g., col. 6, lines 61-65). By contrast, the Applicant's claim 20 specifically relates to providing product location information to a customer regarding the location of a particular product, in response to an inquiry made by the customer about that product's location, while the customer is in the store.

2) Provides at Least one Suggestion Related to the Other Product

As described above, independent claim 20 has further been amended to recite the providing of an output signal that includes not only location information concerning a product about which a product location inquiry was made, but that also "provides at least

PAGE 13/16 * RCVD AT 3/30/2016 4:20:32 PM [Eastern Daylight Time] * SVR:W-PTOFAX-003/11 * DNIS:2738300 * CSID: * DURATION (mm-ss):04-23

one suggestion related to the other product." Such a feature is advantageous because it involves operation in which, in response to customer inquiries, it is possible "to provide additional advertising or promotion information in addition to the location information requested by the customer" (col. 15, lines 49-52 of the '380 patent).

In regard to this feature, the Applicant has not been able to find any disclosure or suggestion relating to such operation within Berstis. The language in Berstis regarding the sending of "further advertisements" at col. 7, lines 18-23 particularly appears to have nothing to do with providing at least one suggestion regarding another product in response to a product location inquiry as recited in the Applicant's claim 20. Further, rather than concerning operation in which at least one suggestion is provided regarding another product in response to the receipt of a product location inquiry concerning a specific product from a customer within a store, Berstis instead appears to concern providing product location information in regard to products that "match" products that were previously-determined to be of interest (see, e.g., col. 9, lines 18-38). That is, the Applicant has not been able to find within Berstis any disclosure or suggestion of providing at least one suggestion regarding any product differing from a product that was previously-determined as being of interest.

Additionally, the Applicant respectfully submits that it would not have been obvious to one of ordinary skill in the art to have arrived at the Applicant's claim 20 with such a feature given the distinctive advantages associated with this manner of operation. Indeed, it should be appreciated that the providing of "at least one suggestion related to the other product" as recited in the Applicant's claim 20 is advantageous on several levels. First, such operation is particularly advantageous because it allows for a customer to be provided with supplemental information concerning another product that may be of use or value to the customer, in addition to merely location information concerning a product that is already of interest to the customer. Additionally, such operation is further

PAGE 14/16 * RCVD AT 3/30/2016 4:20:32 PM [Eastern Daylight Time] * SVR:W-PTOFAX-003/11 * DNIS:2738300 * CSID: * DURATION (mm-ss):04-23

advantageous because it allows for a retailer to alert customers to other products that may be of interest and/or, in some circumstances, to encourage customers to purchase additional products or effectively achieve "up-selling," which can also be beneficial to the retailer.

For at least these reasons, the Applicant submits that it would not have been obvious to one of ordinary skill in the art to arrive at the Applicant's claim 20 based upon Berstis, and therefore that claim 20 should be allowable under 35 U.S.C. 103 over Berstis.

Allowability of Dependent Claim 21 Under 35 U.S.C. 103

Finally, the Applicant submits that claim 21 is allowable under 35 U.S.C. 103 over Berstis for at least the same reasons as claim 20 as set forth above is allowable.

* * *

Conclusion

In view of the above amendments and remarks, the Applicant respectfully requests reconsideration of the present Application.

The Applicant hereby requests and petitions for a three-month extension of time in relation to this Amendment and is submitting herewith the fee for this extension of time. Otherwise, no additional extension of time is believed to be required in regard to this Application, and no other fees are believed due in connection with this Amendment. Nevertheless, should any additional extension of time be deemed necessary, the Applicant hereby conditionally petitions for such additional extension of time. Also, should any further fees be deemed due and necessary to further prosecution of the present Application, the

PAGE 15/16 * RCVD AT 3/30/2016 4:20:32 PM [Eastern Daylight Time] * SVR:W-PTOFAX-003/11 * DNIS:2738300 * CSID: * DURATION (mm-ss):04-23

Applicant authorizes the Patent Office to charge all such additional fees to the credit card identified on the Credit Card Payment form accompanying this submission.

The Applicant invites the Examiner to contact the undersigned at the telephone number below if it is believed that discussion with the Applicant could advance the prosecution of the Application.

Respectfully,

John T. Pienkos
Applicant

Dated: 3/30/16

10019 N. Miller Ct.
Mequon, WI 53092
(262) 643-4165

PAGE 16/16 * RCVD AT 3/30/2016 4:20:32 PM [Eastern Daylight Time] * SVR:W-PTOFAX-003/11 * DNIS:2738300 * CSID: * DURATION (mm-ss):04-23

RECEIVED
CENTRAL FAX CENTER

MAR 3 0 2016

TO: EXAMINER ANDREW J. RUDY
ART UNIT 3687
FAX: (571) 273-8300

FROM: JOHN PIENKOS
APPLICANT, U.S. PATENT APPL. NO. 14/120,873
FAX: (262) 643-4165 (757) 220-3486

DATE: March 30, 2016

RE: AMENDMENT

NOTE: PLEASE NOTE THAT THIS FAX INCLUDES:

1) CREDIT CARD PAYMENT FORM;
2) PETITION FOR THREE MONTH EXTENSION OF TIME;
AND
3) AMENDMENT

16 PAGES INCLUDING COVER SHEET

RECEIVED
CENTRAL FAX CENTER

MAR 3 0 2016

PTO/SB/22 (03-13)
Approved for use through 3/31/2013. OMB 0651-0031
U.S. Patent and Trademark Office; U.S. DEPARTMENT OF COMMERCE

Under the Paperwork Reduction Act of 1995, no persons are required to respond to a collection of information unless it displays a valid OMB control number.

PETITION FOR EXTENSION OF TIME UNDER 37 CFR 1.136(a)

Docket Number (Optional)

Application Number 14/120,873

Filed 2014-07-07

For APPARATUS AND METHOD FOR PROVIDING PRODUCT LOCATION INFORMATION TO CUSTOMERS IN A STORE

Art Unit 3687

Examiner Rudy, Andrew J.

This is a request under the provisions of 37 CFR 1.136(a) to extend the period for filing a reply in the above-identified application.

The requested extension and fee are as follows (check time period desired and enter the appropriate fee below):

	Fee	Small Entity Fee	Micro Entity Fee	
☐ One month (37 CFR 1.17(a)(1))	$200	$100	$50	$
☐ Two months (37 CFR 1.17(a)(2))	$600	$300	$150	$
☑ Three months (37 CFR 1.17(a)(3))	$1,400	$700	$350	$ 700
☐ Four months (37 CFR 1.17(a)(4))	$2,200	$1,100	$550	$
☐ Five months (37 CFR 1.17(a)(5))	$3,000	$1,500	$750	$

☑ Applicant asserts small entity status. See 37 CFR 1.27.

03/31/2016 JVONG1 00000047 14120873
01 FC:2253 700.00 OP

☐ Applicant certifies micro entity status. See 37 CFR 1.29.
Form PTO/SB/15A or B or equivalent must either be enclosed or have been submitted previously.

☐ A check in the amount of the fee is enclosed.

☑ Payment by credit card. Form PTO-2038 is attached.

☐ The Director has already been authorized to charge fees in this application to a Deposit Account.

☑ The Director is hereby authorized to charge any fees which may be required, or credit any overpayment, to ~~Deposit Account Number~~ credit card listed on credit card payment form.

☐ Payment made via EFS-Web.

WARNING: Information on this form may become public. Credit card information should not be included on this form. Provide credit card information and authorization on PTO-2038.

I am the

☑ applicant/inventor.

☐ assignee of record of the entire interest. See 37 CFR 3.71. 37 CFR 3.73(b) statement is enclosed (Form PTO/SB/96).

☐ attorney or agent of record. Registration number _____.

☐ attorney or agent acting under 37 CFR 1.34. Registration number _____.

Signature — Date 3/30/16

John T. Pienkos — Typed or printed name

262-643-4165 — Telephone Number

NOTE: This form must be signed in accordance with 37 CFR 1.33. See 37 CFR 1.4 for signature requirements and certifications. Submit multiple forms if more than one signature is required, see below*.

☐ * Total of _____ forms are submitted.

This collection of information is required by 37 CFR 1.136(a). The information is required to obtain or retain a benefit by the public, which is to file (and by the USPTO to process) an application. Confidentiality is governed by 35 U.S.C. 122 and 37 CFR 1.11 and 1.14. This collection is estimated to take 6 minutes to complete, including gathering, preparing, and submitting the completed application form to the USPTO. Time will vary depending upon the individual case. Any comments on the amount of time you require to complete this form and/or suggestions for reducing this burden should be sent to the Chief Information Officer, U.S. Patent and Trademark Office, U.S. Department of Commerce, P.O. Box 1450, Alexandria, VA 22313-1450. DO NOT SEND FEES OR COMPLETED FORMS TO THIS ADDRESS. SEND TO: Commissioner for Patents, P.O. Box 1450, Alexandria, VA 22313-1450.
If you need assistance in completing the form, call 1-800-PTO-9199 and select option 2.

PTO/SB/06 (09-11)
Approved for use through 1/31/2014. OMB 0651-0032
U.S. Patent and Trademark Office; U.S. DEPARTMENT OF COMMERCE
Under the Paperwork Reduction Act of 1995, no persons are required to respond to a collection of information unless it displays a valid OMB control number.

PATENT APPLICATION FEE DETERMINATION RECORD

Substitute for Form PTO-875

Application or Docket Number	Filing Date	
14/120,873	07/07/2014	☐ To be Mailed

ENTITY: ☐ LARGE ☒ SMALL ☐ MICRO

APPLICATION AS FILED – PART I

FOR	(Column 1) NUMBER FILED	(Column 2) NUMBER EXTRA	RATE ($)	FEE ($)
☐ BASIC FEE (37 CFR 1.16(a), (b), or (c))	N/A	N/A	N/A	
☐ SEARCH FEE (37 CFR 1.16(k), (i), or (m))	N/A	N/A	N/A	
☐ EXAMINATION FEE (37 CFR 1.16(o), (p), or (q))	N/A	N/A	N/A	
TOTAL CLAIMS (37 CFR 1.16(i))	minus 20 =	*	x $ =	
INDEPENDENT CLAIMS (37 CFR 1.16(h))	minus 3 =	*	x $ =	
☐ APPLICATION SIZE FEE (37 CFR 1.16(s))	If the specification and drawings exceed 100 sheets of paper, the application size fee due is $310 ($155 for small entity) for each additional 50 sheets or fraction thereof. See 35 U.S.C. 41(a)(1)(G) and 37 CFR 1.16(s).			
☐ MULTIPLE DEPENDENT CLAIM PRESENT (37 CFR 1.16(j))				
* If the difference in column 1 is less than zero, enter "0" in column 2.			TOTAL	

APPLICATION AS AMENDED – PART II

AMENDMENT 03/30/2016

	(Column 1) CLAIMS REMAINING AFTER AMENDMENT		(Column 2) HIGHEST NUMBER PREVIOUSLY PAID FOR	(Column 3) PRESENT EXTRA	RATE ($)	ADDITIONAL FEE ($)
Total (37 CFR 1.16(i))	* 2	Minus	** 20	= 0	x $40 =	0
Independent (37 CFR 1.16(h))	* 1	Minus	***3	= 0	x $210 =	0
☐ Application Size Fee (37 CFR 1.16(s))						
☐ FIRST PRESENTATION OF MULTIPLE DEPENDENT CLAIM (37 CFR 1.16(j))						
					TOTAL ADD'L FEE	0

AMENDMENT

	(Column 1) CLAIMS REMAINING AFTER AMENDMENT		(Column 2) HIGHEST NUMBER PREVIOUSLY PAID FOR	(Column 3) PRESENT EXTRA	RATE ($)	ADDITIONAL FEE ($)
Total (37 CFR 1.16(i))	*	Minus	**	=	x $ =	
Independent (37 CFR 1.16(h))	*	Minus	***	=	x $ =	
☐ Application Size Fee (37 CFR 1.16(s))						
☐ FIRST PRESENTATION OF MULTIPLE DEPENDENT CLAIM (37 CFR 1.16(j))						
					TOTAL ADD'L FEE	

* If the entry in column 1 is less than the entry in column 2, write "0" in column 3.

** If the "Highest Number Previously Paid For" IN THIS SPACE is less than 20, enter "20".

*** If the "Highest Number Previously Paid For" IN THIS SPACE is less than 3, enter "3".

The "Highest Number Previously Paid For" (Total or Independent) is the highest number found in the appropriate box in column 1.

LIE
/SHAREILL COLES/

This collection of information is required by 37 CFR 1.16. The information is required to obtain or retain a benefit by the public which is to file (and by the USPTO to process) an application. Confidentiality is governed by 35 U.S.C. 122 and 37 CFR 1.14. This collection is estimated to take 12 minutes to complete, including gathering, preparing, and submitting the completed application form to the USPTO. Time will vary depending upon the individual case. Any comments on the amount of time you require to complete this form and/or suggestions for reducing this burden, should be sent to the Chief Information Officer, U.S. Patent and Trademark Office, U.S. Department of Commerce, P.O. Box 1450, Alexandria, VA 22313-1450. DO NOT SEND FEES OR COMPLETED FORMS TO THIS ADDRESS. **SEND TO: Commissioner for Patents, P.O. Box 1450, Alexandria, VA 22313-1450.**

If you need assistance in completing the form, call 1-800-PTO-9199 and select option 2.

UNITED STATES PATENT AND TRADEMARK OFFICE

UNITED STATES DEPARTMENT OF COMMERCE
United States Patent and Trademark Office
Address: COMMISSIONER FOR PATENTS
P.O. Box 1450
Alexandria, Virginia 22313-1450
www.uspto.gov

NOTICE OF ALLOWANCE AND FEE(S) DUE

7590 05/18/2016

JOHN T. PIENKOS
10019 N. MILLER CT.
MEQUON, WI 53092

EXAMINER
RUDY, ANDREW J

ART UNIT	PAPER NUMBER
3687	

DATE MAILED: 05/18/2016

APPLICATION NO.	FILING DATE	FIRST NAMED INVENTOR	ATTORNEY DOCKET NO.	CONFIRMATION NO.
14/120,873	07/07/2014	John T. Pienkos		2619

TITLE OF INVENTION: APPARATUS AND METHOD FOR PROVIDING PRODUCT LOCATION INFORMATION TO CUSTOMERS IN A STORE

APPLN. TYPE	ENTITY STATUS	ISSUE FEE DUE	PUBLICATION FEE DUE	PREV. PAID ISSUE FEE	TOTAL FEE(S) DUE	DATE DUE
nonprovisional	SMALL	$480	$0	$0	$480	08/18/2016

THE APPLICATION IDENTIFIED ABOVE HAS BEEN EXAMINED AND IS ALLOWED FOR ISSUANCE AS A PATENT. PROSECUTION ON THE MERITS IS CLOSED. THIS NOTICE OF ALLOWANCE IS NOT A GRANT OF PATENT RIGHTS. THIS APPLICATION IS SUBJECT TO WITHDRAWAL FROM ISSUE AT THE INITIATIVE OF THE OFFICE OR UPON PETITION BY THE APPLICANT. SEE 37 CFR 1.313 AND MPEP 1308.

THE ISSUE FEE AND PUBLICATION FEE (IF REQUIRED) MUST BE PAID WITHIN THREE MONTHS FROM THE MAILING DATE OF THIS NOTICE OR THIS APPLICATION SHALL BE REGARDED AS ABANDONED. THIS STATUTORY PERIOD CANNOT BE EXTENDED. SEE 35 U.S.C. 151. THE ISSUE FEE DUE INDICATED ABOVE DOES NOT REFLECT A CREDIT FOR ANY PREVIOUSLY PAID ISSUE FEE IN THIS APPLICATION. IF AN ISSUE FEE HAS PREVIOUSLY BEEN PAID IN THIS APPLICATION (AS SHOWN ABOVE), THE RETURN OF PART B OF THIS FORM WILL BE CONSIDERED A REQUEST TO REAPPLY THE PREVIOUSLY PAID ISSUE FEE TOWARD THE ISSUE FEE NOW DUE.

HOW TO REPLY TO THIS NOTICE:

I. Review the ENTITY STATUS shown above. If the ENTITY STATUS is shown as SMALL or MICRO, verify whether entitlement to that entity status still applies.

If the ENTITY STATUS is the same as shown above, pay the TOTAL FEE(S) DUE shown above.

If the ENTITY STATUS is changed from that shown above, on PART B - FEE(S) TRANSMITTAL, complete section number 5 titled "Change in Entity Status (from status indicated above)".

For purposes of this notice, small entity fees are 1/2 the amount of undiscounted fees, and micro entity fees are 1/2 the amount of small entity fees.

II. PART B - FEE(S) TRANSMITTAL, or its equivalent, must be completed and returned to the United States Patent and Trademark Office (USPTO) with your ISSUE FEE and PUBLICATION FEE (if required). If you are charging the fee(s) to your deposit account, section "4b" of Part B - Fee(s) Transmittal should be completed and an extra copy of the form should be submitted. If an equivalent of Part B is filed, a request to reapply a previously paid issue fee must be clearly made, and delays in processing may occur due to the difficulty in recognizing the paper as an equivalent of Part B.

III. All communications regarding this application must give the application number. Please direct all communications prior to issuance to Mail Stop ISSUE FEE unless advised to the contrary.

IMPORTANT REMINDER: Utility patents issuing on applications filed on or after Dec. 12, 1980 may require payment of maintenance fees. It is patentee's responsibility to ensure timely payment of maintenance fees when due.

PART B - FEE(S) TRANSMITTAL

Complete and send this form, together with applicable fee(s), to: Mail **Mail Stop ISSUE FEE**
Commissioner for Patents
P.O. Box 1450
Alexandria, Virginia 22313-1450
or Fax (571)-273-2885

INSTRUCTIONS: This form should be used for transmitting the ISSUE FEE and PUBLICATION FEE (if required). Blocks 1 through 5 should be completed where appropriate. All further correspondence including the Patent, advance orders and notification of maintenance fees will be mailed to the current correspondence address as indicated unless corrected below or directed otherwise in Block 1, by (a) specifying a new correspondence address; and/or (b) indicating a separate "FEE ADDRESS" for maintenance fee notifications.

CURRENT CORRESPONDENCE ADDRESS (Note: Use Block 1 for any change of address)

7590 05/18/2016
JOHN T. PIENKOS
10019 N. MILLER CT.
MEQUON, WI 53092

Note: A certificate of mailing can only be used for domestic mailings of the Fee(s) Transmittal. This certificate cannot be used for any other accompanying papers. Each additional paper, such as an assignment or formal drawing, must have its own certificate of mailing or transmission.

Certificate of Mailing or Transmission
I hereby certify that this Fee(s) Transmittal is being deposited with the United States Postal Service with sufficient postage for first class mail in an envelope addressed to the Mail Stop ISSUE FEE address above, or being facsimile transmitted to the USPTO (571) 273-2885, on the date indicated below.

(Depositor's name)
(Signature)
(Date)

APPLICATION NO.	FILING DATE	FIRST NAMED INVENTOR	ATTORNEY DOCKET NO.	CONFIRMATION NO.
14/120,873	07/07/2014	John T. Pienkos		2619

TITLE OF INVENTION: APPARATUS AND METHOD FOR PROVIDING PRODUCT LOCATION INFORMATION TO CUSTOMERS IN A STORE

APPLN. TYPE	ENTITY STATUS	ISSUE FEE DUE	PUBLICATION FEE DUE	PREV. PAID ISSUE FEE	TOTAL FEE(S) DUE	DATE DUE
nonprovisional	SMALL	$480	$0	$0	$480	08/18/2016

EXAMINER	ART UNIT	CLASS-SUBCLASS
RUDY, ANDREW J	3687	705-026900

1. Change of correspondence address or indication of "Fee Address" (37 CFR 1.363).
❑ Change of correspondence address (or Change of Correspondence Address form PTO/SB/122) attached.
❑ "Fee Address" indication (or "Fee Address" Indication form PTO/SB/47; Rev 03-02 or more recent) attached. **Use of a Customer Number is required.**

2. For printing on the patent front page, list
(1) The names of up to 3 registered patent attorneys or agents OR, alternatively,
(2) The name of a single firm (having as a member a registered attorney or agent) and the names of up to 2 registered patent attorneys or agents. If no name is listed, no name will be printed.
1_____
2_____
3_____

3. ASSIGNEE NAME AND RESIDENCE DATA TO BE PRINTED ON THE PATENT (print or type)

PLEASE NOTE: Unless an assignee is identified below, no assignee data will appear on the patent. If an assignee is identified below, the document has been filed for recordation as set forth in 37 CFR 3.11. Completion of this form is NOT a substitute for filing an assignment.

(A) NAME OF ASSIGNEE (B) RESIDENCE: (CITY and STATE OR COUNTRY)

Please check the appropriate assignee category or categories (will not be printed on the patent) : ❑ Individual ❑ Corporation or other private group entity ❑ Government

4a. The following fee(s) are submitted:
❑ Issue Fee
❑ Publication Fee (No small entity discount permitted)
❑ Advance Order - # of Copies _____

4b. Payment of Fee(s): (**Please first reapply any previously paid issue fee shown above**)
❑ A check is enclosed.
❑ Payment by credit card. Form PTO-2038 is attached.
❑ The director is hereby authorized to charge the required fee(s), any deficiency, or credits any overpayment, to Deposit Account Number _____ (enclose an extra copy of this form).

5. **Change in Entity Status** (from status indicated above)
❑ Applicant certifying micro entity status. See 37 CFR 1.29 — NOTE: Absent a valid certification of Micro Entity Status (see forms PTO/SB/15A and 15B), issue fee payment in the micro entity amount will not be accepted at the risk of application abandonment.
❑ Applicant asserting small entity status. See 37 CFR 1.27 — NOTE: If the application was previously under micro entity status, checking this box will be taken to be a notification of loss of entitlement to micro entity status.
❑ Applicant changing to regular undiscounted fee status. — NOTE: Checking this box will be taken to be a notification of loss of entitlement to small or micro entity status, as applicable.

NOTE: This form must be signed in accordance with 37 CFR 1.31 and 1.33. See 37 CFR 1.4 for signature requirements and certifications.

Authorized Signature _____ Date _____

Typed or printed name _____ Registration No. _____

Home Depot
Ex. 1003 - Page 101

UNITED STATES PATENT AND TRADEMARK OFFICE

UNITED STATES DEPARTMENT OF COMMERCE
United States Patent and Trademark Office
Address: COMMISSIONER FOR PATENTS
P.O. Box 1450
Alexandria, Virginia 22313-1450
www.uspto.gov

APPLICATION NO.	FILING DATE	FIRST NAMED INVENTOR	ATTORNEY DOCKET NO.	CONFIRMATION NO.
14/120,873	07/07/2014	John T. Pienkos		2619

7590 05/18/2016

JOHN T. PIENKOS
10019 N. MILLER CT.
MEQUON, WI 53092

EXAMINER
RUDY, ANDREW J

ART UNIT	PAPER NUMBER
3687	

DATE MAILED: 05/18/2016

Determination of Patent Term Adjustment under 35 U.S.C. 154 (b)
(Applications filed on or after May 29, 2000)

The Office has discontinued providing a Patent Term Adjustment (PTA) calculation with the Notice of Allowance.

Section 1(h)(2) of the AIA Technical Corrections Act amended 35 U.S.C. 154(b)(3)(B)(i) to eliminate the requirement that the Office provide a patent term adjustment determination with the notice of allowance. See Revisions to Patent Term Adjustment, 78 Fed. Reg. 19416, 19417 (Apr. 1, 2013). Therefore, the Office is no longer providing an initial patent term adjustment determination with the notice of allowance. The Office will continue to provide a patent term adjustment determination with the Issue Notification Letter that is mailed to applicant approximately three weeks prior to the issue date of the patent, and will include the patent term adjustment on the patent. Any request for reconsideration of the patent term adjustment determination (or reinstatement of patent term adjustment) should follow the process outlined in 37 CFR 1.705.

Any questions regarding the Patent Term Extension or Adjustment determination should be directed to the Office of Patent Legal Administration at (571)-272-7702. Questions relating to issue and publication fee payments should be directed to the Customer Service Center of the Office of Patent Publication at 1-(888)-786-0101 or (571)-272-4200.

Notice Requiring Inventor's Oath or Declaration	Application No. 14/120,873	Applicant(s) John T. Pienkos	
	Examiner RUDY, ANDREW J	Art Unit 3687	

This notice is an attachment to the Notice of Allowability (PTOL-37), or the Notice of Allowability For A Design Application (PTOL-37D).

An inventor's oath or declaration in compliance with 37 CFR 1.63 or 1.64 executed by or with respect to each inventor has not yet been submitted.

An oath or declaration in compliance with 37 CFR 1.63, or a substitute statement in compliance with 37 CFR 1.64, executed by or with respect to each inventor (for any inventor for which a compliant oath, declaration, or substitute statement has not yet been submitted) MUST be filed no later than the date on which the issue fee is paid. See 35 U.S.C. 115(f). Failure to timely comply will result in ABANDONMENT of this application.

A properly executed inventor's oath to declaration has not been received for the following inventor(s):

If applicant previously filed one or more oaths, declarations, or substitute statements, applicant may have received an informational notice regarding deficiencies therein.

The following deficiencies are noted:

INFORMAL ACTION PROBLEMS

- A properly executed inventor's oath or declaration has not been received for the following inventor(s): **John T. Pienkos**.
  Applicant may submit the inventor's oath or declaration at any time before the Notice of Allowance and Fee(s) Due, PTOL-85, is mailed.

Questions relating to this Notice should be directed to the Application Assistance Unit at 571-272-4200.

OMB Clearance and PRA Burden Statement for PTOL-85 Part B

The Paperwork Reduction Act (PRA) of 1995 requires Federal agencies to obtain Office of Management and Budget approval before requesting most types of information from the public. When OMB approves an agency request to collect information from the public, OMB (i) provides a valid OMB Control Number and expiration date for the agency to display on the instrument that will be used to collect the information and (ii) requires the agency to inform the public about the OMB Control Number's legal significance in accordance with 5 CFR 1320.5(b).

The information collected by PTOL-85 Part B is required by 37 CFR 1.311. The information is required to obtain or retain a benefit by the public which is to file (and by the USPTO to process) an application. Confidentiality is governed by 35 U.S.C. 122 and 37 CFR 1.14. This collection is estimated to take 12 minutes to complete, including gathering, preparing, and submitting the completed application form to the USPTO. Time will vary depending upon the individual case. Any comments on the amount of time you require to complete this form and/or suggestions for reducing this burden, should be sent to the Chief Information Officer, U.S. Patent and Trademark Office, U.S. Department of Commerce, P.O. Box 1450, Alexandria, Virginia 22313-1450. DO NOT SEND FEES OR COMPLETED FORMS TO THIS ADDRESS. SEND TO: Commissioner for Patents, P.O. Box 1450, Alexandria, Virginia 22313-1450. Under the Paperwork Reduction Act of 1995, no persons are required to respond to a collection of information unless it displays a valid OMB control number.

Privacy Act Statement

The Privacy Act of 1974 (P.L. 93-579) requires that you be given certain information in connection with your submission of the attached form related to a patent application or patent. Accordingly, pursuant to the requirements of the Act, please be advised that: (1) the general authority for the collection of this information is 35 U.S.C. 2(b)(2); (2) furnishing of the information solicited is voluntary; and (3) the principal purpose for which the information is used by the U.S. Patent and Trademark Office is to process and/or examine your submission related to a patent application or patent. If you do not furnish the requested information, the U.S. Patent and Trademark Office may not be able to process and/or examine your submission, which may result in termination of proceedings or abandonment of the application or expiration of the patent.

The information provided by you in this form will be subject to the following routine uses:

1. The information on this form will be treated confidentially to the extent allowed under the Freedom of Information Act (5 U.S.C. 552) and the Privacy Act (5 U.S.C 552a). Records from this system of records may be disclosed to the Department of Justice to determine whether disclosure of these records is required by the Freedom of Information Act.
2. A record from this system of records may be disclosed, as a routine use, in the course of presenting evidence to a court, magistrate, or administrative tribunal, including disclosures to opposing counsel in the course of settlement negotiations.
3. A record in this system of records may be disclosed, as a routine use, to a Member of Congress submitting a request involving an individual, to whom the record pertains, when the individual has requested assistance from the Member with respect to the subject matter of the record.
4. A record in this system of records may be disclosed, as a routine use, to a contractor of the Agency having need for the information in order to perform a contract. Recipients of information shall be required to comply with the requirements of the Privacy Act of 1974, as amended, pursuant to 5 U.S.C. 552a(m).
5. A record related to an International Application filed under the Patent Cooperation Treaty in this system of records may be disclosed, as a routine use, to the International Bureau of the World Intellectual Property Organization, pursuant to the Patent Cooperation Treaty.
6. A record in this system of records may be disclosed, as a routine use, to another federal agency for purposes of National Security review (35 U.S.C. 181) and for review pursuant to the Atomic Energy Act (42 U.S.C. 218(c)).
7. A record from this system of records may be disclosed, as a routine use, to the Administrator, General Services, or his/her designee, during an inspection of records conducted by GSA as part of that agency's responsibility to recommend improvements in records management practices and programs, under authority of 44 U.S.C. 2904 and 2906. Such disclosure shall be made in accordance with the GSA regulations governing inspection of records for this purpose, and any other relevant (i.e., GSA or Commerce) directive. Such disclosure shall not be used to make determinations about individuals.
8. A record from this system of records may be disclosed, as a routine use, to the public after either publication of the application pursuant to 35 U.S.C. 122(b) or issuance of a patent pursuant to 35 U.S.C. 151. Further, a record may be disclosed, subject to the limitations of 37 CFR 1.14, as a routine use, to the public if the record was filed in an application which became abandoned or in which the proceedings were terminated and which application is referenced by either a published application, an application open to public inspection or an issued patent.
9. A record from this system of records may be disclosed, as a routine use, to a Federal, State, or local law enforcement agency, if the USPTO becomes aware of a violation or potential violation of law or regulation.

Notice of Allowability	Application No. 14/120,873	Applicant(s) PIENKOS, JOHN T.	
	Examiner ANDREW JOSEPH RUDY	Art Unit 3687	AIA (First Inventor to File) Status No

-- The MAILING DATE of this communication appears on the cover sheet with the correspondence address--

All claims being allowable, PROSECUTION ON THE MERITS IS (OR REMAINS) CLOSED in this application. If not included herewith (or previously mailed), a Notice of Allowance (PTOL-85) or other appropriate communication will be mailed in due course. **THIS NOTICE OF ALLOWABILITY IS NOT A GRANT OF PATENT RIGHTS.** This application is subject to withdrawal from issue at the initiative of the Office or upon petition by the applicant. See 37 CFR 1.313 and MPEP 1308.

1. ☒ This communication is responsive to *30 March 2016 Amendment and REMARKS*.
   ☐ A declaration(s)/affidavit(s) under **37 CFR 1.130(b)** was/were filed on_____.
2. ☐ An election was made by the applicant in response to a restriction requirement set forth during the interview on _____; the restriction requirement and election have been incorporated into this action.
3. ☒ The allowed claim(s) is/are *20 and 21*. As a result of the allowed claim(s), you may be eligible to benefit from the **Patent Prosecution Highway** program at a participating intellectual property office for the corresponding application. For more information, please see http://www.uspto.gov/patents/init_events/pph/index.jsp or send an inquiry to PPHfeedback@uspto.gov .
4. ☐ Acknowledgment is made of a claim for foreign priority under 35 U.S.C. § 119(a)-(d) or (f).

   Certified copies:

   a) ☐ All b) ☐ Some *c) ☐ None of the:
   1. ☐ Certified copies of the priority documents have been received.
   2. ☐ Certified copies of the priority documents have been received in Application No. _____ .
   3. ☐ Copies of the certified copies of the priority documents have been received in this national stage application from the International Bureau (PCT Rule 17.2(a)).

   * Certified copies not received: _____.

Applicant has THREE MONTHS FROM THE "MAILING DATE" of this communication to file a reply complying with the requirements noted below. Failure to timely comply will result in ABANDONMENT of this application.
THIS THREE-MONTH PERIOD IS NOT EXTENDABLE.

5. ☐ CORRECTED DRAWINGS (as "replacement sheets") must be submitted.
   ☐ including changes required by the attached Examiner's Amendment / Comment or in the Office action of Paper No./Mail Date _____.

   Identifying indicia such as the application number (see 37 CFR 1.84(c)) should be written on the drawings in the front (not the back) of each sheet. Replacement sheet(s) should be labeled as such in the header according to 37 CFR 1.121(d).
6. ☐ DEPOSIT OF and/or INFORMATION about the deposit of BIOLOGICAL MATERIAL must be submitted. Note the attached Examiner's comment regarding REQUIREMENT FOR THE DEPOSIT OF BIOLOGICAL MATERIAL.

Attachment(s)

1. ☒ Notice of References Cited (PTO-892)
2. ☐ Information Disclosure Statements (PTO/SB/08), Paper No./Mail Date _____
3. ☐ Examiner's Comment Regarding Requirement for Deposit of Biological Material
4. ☐ Interview Summary (PTO-413), Paper No./Mail Date _____ .
5. ☒ Examiner's Amendment/Comment
6. ☒ Examiner's Statement of Reasons for Allowance
7. ☐ Other _____.

DETAILED ACTION

Notice of Pre-AIA or AIA Status

1. The present application is being examined under the pre-AIA first to invent provisions.

2. Applicant cancelled claims 1-19.

Allowable Subject Matter

3. Claims 20 and 21 are allowed.

4. The following is an examiner's statement of reasons for allowance: Applicant's March 30, 2016 REMARKS are convincing with regards to overcoming the previous office action. Claims 20 and 21 are allowed as the prior art, either alone or in combination, does not disclose Applicant's inventive claim language.

Further, claims 20 and 21 have been reviewed in light of Alice Corporation Pty. Ltd. v. CLS Bank International, et al., 573 U. S. ___ (2014).

Claims 20 and 21 are determined to be directed to patent-eligible subject matter and the Examiner does not consider any of the pending claims to be directed to an abstract idea. Even if the Examiner were to identify an abstract idea for any claim, then under a further analysis under Alice all claims would still be found to be patent eligible for the following reasons. The Examiner finds that when all of the elements of each claim are considered individually and as an ordered combination, each claim contains

an inventive concept which is directed to an application, a particular application, or a special application, of the identified abstract idea. Further the Examiner finds that issuance of a patent for any claim would not preempt the identified abstract idea, or the field of the identified abstract idea.

Any comments considered necessary by applicant must be submitted no later than the payment of the issue fee and, to avoid processing delays, should preferably accompany the issue fee. Such submissions should be clearly labeled "Comments on Statement of Reasons for Allowance."

5. A further pertinent reference of interest is noted on the attached PTO-892.

6. Any inquiry concerning this communication or earlier communications from the examiner should be directed to ANDREW JOSEPH RUDY whose telephone number is (571)272-6789. The examiner can normally be reached on Monday thru Friday.

Information regarding the status of an application may be obtained from the Patent Application Information Retrieval (PAIR) system. Status information for published applications may be obtained from either Private PAIR or Public PAIR. Status information for unpublished applications is available through Private PAIR only. For more information about the PAIR system, see http://pair-direct.uspto.gov. Should you have questions on access to the Private PAIR system, contact the Electronic Business Center (EBC) at 866-217-9197 (toll-free). If you would like assistance from a

USPTO Customer Service Representative or access to the automated information system, call 800-786-9199 (IN USA OR CANADA) or 571-272-1000.

/ANDREW JOSEPH RUDY/

Primary Examiner

Art Unit 3687

Notice of References Cited	Application/Control No. 14/120,873	Applicant(s)/Patent Under Reexamination PIENKOS, JOHN T.	
	Examiner ANDREW JOSEPH RUDY	Art Unit 3687	Page 1 of 1

U.S. PATENT DOCUMENTS

*		Document Number Country Code-Number-Kind Code	Date MM-YYYY	Name	CPC Classification	US Classification
*	A	US-8,373,582 B2	02-2013	Hoffberg; Steven M.	G08G1/0104	340/539.13
	B	US-				
	C	US-				
	D	US-				
	E	US-				
	F	US-				
	G	US-				
	H	US-				
	I	US-				
	J	US-				
	K	US-				
	L	US-				
	M	US-				

FOREIGN PATENT DOCUMENTS

*		Document Number Country Code-Number-Kind Code	Date MM-YYYY	Country	Name	CPC Classification
	N					
	O					
	P					
	Q					
	R					
	S					
	T					

NON-PATENT DOCUMENTS

*		Include as applicable: Author, Title Date, Publisher, Edition or Volume, Pertinent Pages)
	U	
	V	
	W	
	X	

*A copy of this reference is not being furnished with this Office action. (See MPEP § 707.05(a).)
Dates in MM-YYYY format are publication dates. Classifications may be US or foreign.

Search Notes	Application/Control No.	Applicant(s)/Patent under Reexamination
	14/120,873	PIENKOS, JOHN T.
	Examiner	**Art Unit**
	ANDREW JOSEPH RUDY	3687

SEARCHED			
Class	Subclass	Date	Examiner
705	26.1, 26.9	5/13/2016	AJR
G06Q	30/0639	5/13/2016	AJR
G06Q	30/0601	5/13/2016	AJR
G06Q	30/02	5/13/2016	AJR
G06Q	30/0641	5/13/2016	AJR
30/0639	30/10/087	5/13/2016	AJR

INTERFERENCE SEARCHED			
Class	Subclass	Date	Examiner
705	**26.9**	**5/13/2016**	**AJR**
G06Q	30/0639	5/13/2016	AJR
G06Q	30/02	5/13/2016	AJR

SEARCH NOTES (INCLUDING SEARCH STRATEGY)		
	DATE	EXMR
Continuity data reviewed.	5/13/2016	AJR

Issue Classification	Application/Control No.	Applicant(s)/Patent Under Reexamination
	14120873	PIENKOS, JOHN T.
	Examiner	**Art Unit**
	ANDREW JOSEPH RUDY	3687

CPC

Symbol					Type	Version
G06Q		30	/	0639	F	2013-01-01
			/			
			/			
			/			
			/			
			/			
			/			
			/			
			/			
			/			
			/			
			/			
			/			
			/			
			/			

CPC Combination Sets

Symbol					Type	Set	Ranking	Version
			/					
			/					

NONE (Assistant Examiner)	(Date)	**Total Claims Allowed:** 2	
/ANDREW JOSEPH RUDY/ Primary Examiner.Art Unit 3687 (Primary Examiner)	5/13/2016 (Date)	O.G. Print Claim(s) 1	O.G. Print Figure 5

Issue Classification	Application/Control No.	Applicant(s)/Patent Under Reexamination
	14120873	PIENKOS, JOHN T.
	Examiner	**Art Unit**
	ANDREW JOSEPH RUDY	3687

US ORIGINAL CLASSIFICATION		INTERNATIONAL CLASSIFICATION	
CLASS	SUBCLASS	CLAIMED	NON-CLAIMED
705	26.9	G 0 6 Q 30 / 00 (2012.01.01)	

CROSS REFERENCE(S)					
CLASS	SUBCLASS (ONE SUBCLASS PER BLOCK)				

NONE		Total Claims Allowed:	
(Assistant Examiner)	(Date)	2	
/ANDREW JOSEPH RUDY/ Primary Examiner.Art Unit 3687	5/13/2016	O.G. Print Claim(s)	O.G. Print Figure
(Primary Examiner)	(Date)	1	5

Issue Classification	Application/Control No.	Applicant(s)/Patent Under Reexamination
	14120873	PIENKOS, JOHN T.
	Examiner	**Art Unit**
	ANDREW JOSEPH RUDY	3687

☐ **Claims renumbered in the same order as presented by applicant** ☐ **CPA** ☐ **T.D.** ☐ **R.1.47**

Final	Original	Final	Original	Final	Original	Final	Original	Final	Original	Final	Original	Final	Original	Final	Original
1	20														
2	21														

NONE (Assistant Examiner)	(Date)	**Total Claims Allowed:** 2	
/ANDREW JOSEPH RUDY/ Primary Examiner.Art Unit 3687 (Primary Examiner)	5/13/2016 (Date)	O.G. Print Claim(s) 1	O.G. Print Figure 5

PART B - FEE(S) TRANSMITTAL

Complete and send this form, together with applicable fee(s), to: Mail Mail Stop ISSUE FEE
Commissioner for Patents
P.O. Box 1450
Alexandria, Virginia 22313-1450
or Fax (571)-273-2885

INSTRUCTIONS: This form should be used for transmitting the ISSUE FEE and PUBLICATION FEE (if required). Blocks 1 through 5 should be completed where appropriate. All further correspondence including the Patent, advance orders and notification of maintenance fees will be mailed to the current correspondence address as indicated unless corrected below or directed otherwise in Block 1, by (a) specifying a new correspondence address; and/or (b) indicating a separate "FEE ADDRESS" for maintenance fee notifications.

CURRENT CORRESPONDENCE ADDRESS (Note: Use Block 1 for any change of address)

7590 05/18/2016
JOHN T. PIENKOS
10019 N. MILLER CT.
MEQUON, WI 53092

OPAP AKIMA-8 JUN 0 9 2016 PATENT & TRADEMARK OFFICE

Note: A certificate of mailing can only be used for domestic mailings of the Fee(s) Transmittal. This certificate cannot be used for any other accompanying papers. Each additional paper, such as an assignment or formal drawing, must have its own certificate of mailing or transmission.

Certificate of Mailing or Transmission
I hereby certify that this Fee(s) Transmittal is being deposited with the United States Postal Service with sufficient postage for first class mail in an envelope addressed to the Mail Stop ISSUE FEE address above, or being facsimile transmitted to the USPTO (571) 273-2885, on the date indicated below.

JOHN T. PIENKOS	(Depositor's name)
J T Pienkos	(Signature)
JUNE 9, 2016	(Date)

APPLICATION NO.	FILING DATE	FIRST NAMED INVENTOR	ATTORNEY DOCKET NO.	CONFIRMATION NO.
14/120,873	07/07/2014	John T. Pienkos		2619

TITLE OF INVENTION: APPARATUS AND METHOD FOR PROVIDING PRODUCT LOCATION INFORMATION TO CUSTOMERS IN A STORE

APPLN. TYPE	ENTITY STATUS	ISSUE FEE DUE	PUBLICATION FEE DUE	PREV. PAID ISSUE FEE	TOTAL FEE(S) DUE	DATE DUE
nonprovisional	SMALL	$480	$0	$0	$480	08/18/2016

EXAMINER	ART UNIT	CLASS-SUBCLASS
RUDY, ANDREW J	3687	705-026900

06/10/2016 SDIREIA2 00000005 14120873
01 FC:2501 480.00 OP

1. Change of correspondence address or indication of "Fee Address" (37 CFR 1.363).
☐ Change of correspondence address (or Change of Correspondence Address form PTO/SB/122) attached.
☐ "Fee Address" indication (or "Fee Address" Indication form PTO/SB/47; Rev 03-02 or more recent) attached. **Use of a Customer Number is required.**

2. For printing on the patent front page, list
(1) The names of up to 3 registered patent attorneys or agents OR, alternatively,
(2) The name of a single firm (having as a member a registered attorney or agent) and the names of up to 2 registered patent attorneys or agents. If no name is listed, no name will be printed.
1 _____
2 _____
3 _____

3. ASSIGNEE NAME AND RESIDENCE DATA TO BE PRINTED ON THE PATENT (print or type)
PLEASE NOTE: Unless an assignee is identified below, no assignee data will appear on the patent. If an assignee is identified below, the document has been filed for recordation as set forth in 37 CFR 3.11. Completion of this form is NOT a substitute for filing an assignment.
(A) NAME OF ASSIGNEE: Innovaport LLC
(B) RESIDENCE: (CITY and STATE OR COUNTRY): Milwaukee, WI
Please check the appropriate assignee category or categories (will not be printed on the patent): ☐ Individual ☒ Corporation or other private group entity ☐ Government

4a. The following fee(s) are submitted:
☒ Issue Fee
☐ Publication Fee (No small entity discount permitted)
☐ Advance Order - # of Copies _____

4b. Payment of Fee(s): **(Please first reapply any previously paid issue fee shown above)**
☐ A check is enclosed.
☒ Payment by credit card. Form PTO-2038 is attached.
☒ The director is hereby authorized to charge the required fee(s), any deficiency, or credits any overpayment, to ~~Deposit Account Number~~ CREDIT CARD (enclose an extra copy of this form).

5. **Change in Entity Status** (from status indicated above)
☐ Applicant certifying micro entity status. See 37 CFR 1.29
☐ Applicant asserting small entity status. See 37 CFR 1.27
☐ Applicant changing to regular undiscounted fee status.

NOTE: Absent a valid certification of Micro Entity Status (see forms PTO/SB/15A and 15B), issue fee payment in the micro entity amount will not be accepted at the risk of application abandonment.
NOTE: If the application was previously under micro entity status, checking this box will be taken to be a notification of loss of entitlement to micro entity status.
NOTE: Checking this box will be taken to be a notification of loss of entitlement to small or micro entity status, as applicable.

NOTE: This form must be signed in accordance with 37 CFR 1.31 and 1.33. See 37 CFR 1.4 for signature requirements and certifications.

Authorized Signature J T Pienkos Date JUNE 9, 2016
Typed or printed name JOHN T. PIENKOS Registration No. _____

OMB 0651-0032 U.S. Patent and Trademark Office; U.S. DEPARTMENT OF COMMERCE

PAGE 17/18 * RCVD AT 6/9/2016 11:30:47 PM [Eastern Daylight Time] * SVR:W-PTOFAX-002/44 * DNIS:2732885 * CSID:2626434165 * DURATION (mm-ss):09-47

Home Depot
Ex. 1003 - Page 114

OPAP AKIMA-8
JUN 0 9 2016
PATENT & TRADEMARK OFFICE

TO: U.S. PATENT OFFICE
EXAMINER ANDREW
J. RUDY

(571) 273-2885 (FAX)

FROM: JOHN T. PIENKOS
APPLICANT, U.S.
PATENT APPL. NO. 14/120,873

(262) 643-4165 (FAX)

DATE: JUNE 9, 2016

RE: - FORMAL PAPERS - DECLARATION & ASSIGNMENTS (2)
- 312 AMENDMENT
- ISSUE FEE TRANSMITTAL
- CREDIT CARD PAYMENT FORM

18 PAGES INCLUDING COVER PAGE

OPAP
JUN 0 9 2016
PATENT & TRADEMARK OFFICE

PTO/AIA/01 (06-12)
Approved for use through 01/31/2014. OMB 0651-0032
U.S. Patent and Trademark Office; U.S. DEPARTMENT OF COMMERCE

Under the Paperwork Reduction Act of 1995, no persons are required to respond to a collection of information unless it displays a valid OMB control number.

DECLARATION (37 CFR 1.63) FOR UTILITY OR DESIGN APPLICATION USING AN APPLICATION DATA SHEET (37 CFR 1.76)

Title of Invention	APPARATUS AND METHOD FOR PROVIDING PRODUCT LOCATION INFORMATION TO CUSTOMERS IN A STORE

As the below named inventor, I hereby declare that:

This declaration is directed to:

☐ The attached application, or

☒ United States application or PCT international application number 14/120,873

filed on July 7, 2014.

The above-identified application was made or authorized to be made by me.

I believe that I am the original inventor or an original joint inventor of a claimed invention in the application.

I hereby acknowledge that any willful false statement made in this declaration is punishable under 18 U.S.C. 1001 by fine or imprisonment of not more than five (5) years, or both.

WARNING:

Petitioner/applicant is cautioned to avoid submitting personal information in documents filed in a patent application that may contribute to identity theft. Personal information such as social security numbers, bank account numbers, or credit card numbers (other than a check or credit card authorization form PTO-2038 submitted for payment purposes) is never required by the USPTO to support a petition or an application. If this type of personal information is included in documents submitted to the USPTO, petitioners/applicants should consider redacting such personal information from the documents before submitting them to the USPTO. Petitioner/applicant is advised that the record of a patent application is available to the public after publication of the application (unless a non-publication request in compliance with 37 CFR 1.213(a) is made in the application) or issuance of a patent. Furthermore, the record from an abandoned application may also be available to the public if the application is referenced in a published application or an issued patent (see 37 CFR 1.14). Checks and credit card authorization forms PTO-2038 submitted for payment purposes are not retained in the application file and therefore are not publicly available.

LEGAL NAME OF INVENTOR

Inventor: John T. Pienkos Date (Optional): May 30, 2016

Signature: [signature]

Note: An application data sheet (PTO/SB/14 or equivalent), including naming the entire inventive entity, must accompany this form or must have been previously filed. Use an additional PTO/AIA/01 form for each additional inventor.

This collection of information is required by 35 U.S.C. 115 and 37 CFR 1.63. The information is required to obtain or retain a benefit by the public which is to file (and by the USPTO to process) an application. Confidentiality is governed by 35 U.S.C. 122 and 37 CFR 1.11 and 1.14. This collection is estimated to take 1 minute to complete, including gathering, preparing, and submitting the completed application form to the USPTO. Time will vary depending upon the individual case. Any comments on the amount of time you require to complete this form and/or suggestions for reducing this burden, should be sent to the Chief Information Officer, U.S. Patent and Trademark Office, U.S. Department of Commerce, P.O. Box 1450, Alexandria, VA 22313-1450. DO NOT SEND FEES OR COMPLETED FORMS TO THIS ADDRESS. **SEND TO: Commissioner for Patents, P.O. Box 1450, Alexandria, VA 22313-1450.**

If you need assistance in completing the form, call 1-800-PTO-9199 and select option 2.

OPAP
JUN 0 9 2016
AKIMA-8
PATENT & TRADEMARK OFFICE

Form PTO-1595 (Rev. 06-12)
OMB No. 0651-0027 (exp. 04/30/2015)

U.S. DEPARTMENT OF COMMERCE
United States Patent and Trademark Office

RECORDATION FORM COVER SHEET
PATENTS ONLY

To the Director of the U.S. Patent and Trademark Office: Please record the attached documents or the new address(es) below.

1. Name of conveying party(ies)

PATENTBANK L.L.C.

Additional name(s) of conveying party(ies) attached? ☐ Yes ☐ No

2. Name and address of receiving party(ies)

Name: INNOVAPORT LLC

Internal Address:

Street Address: 5017 N. HOLLYWOOD AVE.

City: WHITEFISH BAY

State: WI

Country: USA Zip: 53217

Additional name(s) & address(es) attached? ☐ Yes ☒ No

3. Nature of conveyance/Execution Date(s):

Execution Date(s) MARCH 17, 2003

☐ Assignment ☐ Merger
☐ Security Agreement ☒ Change of Name
☐ Joint Research Agreement
☐ Government Interest Assignment
☐ Executive Order 9424, Confirmatory License
☐ Other

4. Application or patent number(s): ☐ This document serves as an Oath/Declaration (37 CFR 1.63).

A. Patent Application No.(s)

14/120,873

B. Patent No.(s)

Additional numbers attached? ☐ Yes ☒ No

5. Name and address to whom correspondence concerning document should be mailed:

Name: JOHN T. PIENKOS

Internal Address:

Street Address: 10019 N. MILLER CT.

City: MEQUON

State: WI Zip: 53092

Phone Number: (262)643-4165

Docket Number: N/A

Email Address:

6. Total number of applications and patents involved: 2

7. Total fee (37 CFR 1.21(h) & 3.41) $ 0

☐ Authorized to be charged to deposit account
☐ Enclosed
☒ None required ~~(government interest not effecting title)~~

8. Payment Information

Deposit Account Number N/A

Authorized User Name N/A

9. Signature: Signature 5/31/16 Date

JOHN T. PIENKOS
Name of Person Signing

Total number of pages including cover sheet, attachments, and documents: 3

Documents to be recorded (including cover sheet) should be faxed to (571) 273-0140, or mailed to:
Mail Stop Assignment Recordation Services, Director of the USPTO, P.O.Box 1450, Alexandria, V.A. 22313-1450

Home Depot
Ex. 1003 - Page 117

Sec. 183.0203
Wis. Stats.

State of Wisconsin
Department of Financial Institutions

ARTICLES OF AMENDMENT - LIMITED LIABILITY COMPANY

A. The present limited liability company name (prior to any change effected by this amendment) is:

PATENTBANK L.L.C.

Text of Amendment (*Refer to the existing articles of organization and the instructions on the reverse of this form. Determine those items to be changed and enter the number identifying the paragraph in the articles of organization being changed and how the amended paragraph is to read.*)

RESOLVED, THAT the articles of organization be amended as follows:

Resolved, that Article 1 of the articles of organization be amended to read:

Article 1. Name of limited liability company: INNOVAPORT LLC.

STATE OF WISCONSIN FILED
MAR 27 2003
DEPARTMENT OF FINANCIAL INSTITUTIONS

2003 MAR 19 AM 8:45

B. Amendment(s) to the articles of organization was adopted by the vote required by sec. 183.0404(2), Wis. Stats.

C. Executed on 3/17/03
(Date)

(Signature)

Title: ( ) Member **OR** (X) Manager

(Select and mark (X) the one appropriate title)

JOHN T. PIENKOS
(Printed name)

This document was drafted by JOHN T. PIENKOS
(Name the individual who drafted the document)

FILING FEE - $40.00 SEE instructions, suggestions and procedures on following page.

DFI/CORP/504(R5/99) Use of this form is voluntary.

PAGE 4/18 * RCVD AT 6/9/2016 11:30:47 PM [Eastern Daylight Time] * SVR:W-PTOFAX-002/44 * DNIS:2732885 * CSID:2626434165 * DURATION (mm-ss):09-47

ARTICLES OF AMENDMENT – Limited Liability Company

2512 W. MARGARETTA CT.
GLENDALE, WI 53209

▲ Your **return address** and **phone number** during the day: (414) 228 - 6881

INSTRUCTIONS (Ref. sec. 183.0203 Wis. Stats. for document content)

Submit one original and one exact copy to Dept. of Financial Institutions, P O Box 7846, Madison WI, 53707-7846, together with a **FILING FEE of $40.00**, payable to the department. (If sent by Express or Priority U.S. mail, address to 345 W. Washington Ave., 3rd Floor, Madison WI, 53703). This document can be made available in alternate formats upon request to qualifying individuals with disabilities. The original must include an original manual signature, per sec. 183.0107(2), Wis. Stats. Upon filing, the information in this document becomes public and might be used for purposes other than that for which it was originally furnished. If you have any questions, please contact the Division of Corporate & Consumer Services at 608-261-7577. Hearing-impaired may call 608-266-8818 for TDY.

A. State the name of the limited liability company (before any change effected by this amendment) and the text of the amendment(s). The text should recite the resolution adopted (e.g., "Resolved, that Article 1 of the articles of organization be amended to read: ..... (enter the amended article).

An amendment may change or add only those provisions that are required under sec. 183.0202, Wis. Stats., to be included in articles of organization. If the amendment changes the name of the limited liability company, the new name must contain the words "limited liability company", or "limited liability co." or end with the abbreviation "L.L.C." or "LLC."

B. This statement is required by sec. 183.0203(2)(c).

C. Enter the date of execution and the name and title of the person signing the document. The document must be signed by one of the following: A **member** of the limited liability company, if management is vested in the members, or a **manager** if management is vested in one or more managers. Select and mark (X) the appropriate choice in item C.

If the document is executed in Wisconsin, sec. 182.01(3) provides that it shall not be filed unless the name of the person (individual) who drafted it is printed, typewritten or stamped thereon in a legible manner. If the document is not executed in Wisconsin, enter that remark.

PAGE 5/18 * RCVD AT 6/9/2016 11:30:47 PM [Eastern Daylight Time] * SVR:W-PTOFAX-002/44 * DNIS:2732885 * CSID:2626434165 * DURATION (mm-ss):09-47

OPAP AKIMA-B JUN 0 9 2016 PATENT & TRADEMARK OFFICE

Form PTO-1595 (Rev. 06-12)
OMB No. 0651-0027 (exp. 04/30/2015)

U.S. DEPARTMENT OF COMMERCE
United States Patent and Trademark Office

RECORDATION FORM COVER SHEET
PATENTS ONLY

To the Director of the U.S. Patent and Trademark Office: Please record the attached documents or the new address(es) below.

1. Name of conveying party(ies)

JOHN T. PIENKOS

Additional name(s) of conveying party(ies) attached? ☐ Yes ☐ No

2. Name and address of receiving party(ies)

Name: PATENTBANK L.L.C.
Internal Address:
Street Address: 5017 N. HOLLYWOOD AVE.
City: WHITEFISH BAY
State: WI
Country: USA Zip: 53217

Additional name(s) & address(es) attached? ☐ Yes ☒ No

3. Nature of conveyance/Execution Date(s):

Execution Date(s) SEPTEMBER 14, 2000

☒ Assignment ☐ Merger
☐ Security Agreement ☐ Change of Name
☐ Joint Research Agreement
☐ Government Interest Assignment
☐ Executive Order 9424, Confirmatory License
☐ Other

4. Application or patent number(s): ☐ This document serves as an Oath/Declaration (37 CFR 1.63).

A. Patent Application No.(s)
14/120,873

B. Patent No.(s)

Additional numbers attached? ☐ Yes ☒ No

5. Name and address to whom correspondence concerning document should be mailed:

Name: JOHN T. PIENKOS
Internal Address:
Street Address: 10019 N. MILLER CT.
City: MEQUON
State: WI Zip: 53092
Phone Number: (262)643-4165
Docket Number: N/A
Email Address:

6. Total number of applications and patents involved: 1

7. Total fee (37 CFR 1.21(h) & 3.41) $ 0

☐ Authorized to be charged to deposit account
☐ Enclosed
☒ None required (~~government interest not affecting title~~)

8. Payment Information

Deposit Account Number N/A
Authorized User Name N/A

9. Signature: [signature] 5/31/16
Signature Date

JOHN T. PIENKOS
Name of Person Signing

Total number of pages including cover sheet, attachments, and documents: 3

Documents to be recorded (including cover sheet) should be faxed to (571) 273-0140, or mailed to:
Mail Stop Assignment Recordation Services, Director of the USPTO, P.O.Box 1450, Alexandria, V.A. 22313-1450

ASSIGNMENT AND AGREEMENT

WHEREAS, John T. Pienkos, formerly of 5017 N. Hollywood Ave., Whitefish Bay, Wisconsin 53217 and now residing at 1104 N. Marshall St., Apt. 401, Milwaukee, Wisconsin 53202 (hereinafter referred to as the "ASSIGNOR") has invented a certain invention entitled "Apparatus and Method for Providing Product Location Information to Customers in a Store" for which a provisional application for United States Letters Patent was filed on October 9, 1999 as Application No. 60/158,444, and a nonprovisional application for United States Letters Patent was filed on July 23, 2000 as Application No. 09/626365, the nonprovisional application claiming the benefit of the provisional application;

WHEREAS, Patentbank L.L.C., a limited liability corporation duly organized and existing under the laws of the State of Wisconsin, and having its principal place of business at 5017 N. Hollywood Ave, Whitefish Bay, Wisconsin 53217 (hereinafter referred to as the "ASSIGNEE") is desirous of acquiring the entire interest therein; and

WHEREAS, the ASSIGNOR has caused the formation of the ASSIGNEE, has paid all expenses incident to and arising out of the organization of the ASSIGNEE, and wishes to make a further capital contribution to the ASSIGNEE both in recognition of and as a confirmation of the exclusive ownership by the ASSIGNOR of all of the membership interests in the ASSIGNEE;

NOW THEREFORE, in consideration of One Dollar ($1.00), in consideration of the confirmation by the ASSIGNEE that the ASSIGNOR exclusively owns all of the membership interests in the ASSIGNEE, and in consideration of other good and valuable consideration, the receipt and sufficiency of which are hereby acknowledged, the ASSIGNOR has sold, assigned, and transferred, and by these presents hereby sells, assigns, and transfers, unto the ASSIGNEE, its successors and assigns, the full and exclusive right, title, and interest in and to (a) the above-identified invention or inventions and all improvements and modifications thereof, (b) the above-identified applications and all other applications for Letters Patent of the United States and countries foreign thereto for the above-identified invention or inventions and all improvements and modifications thereof, (c) all Letters Patent which may issue from said applications in the United States and countries foreign thereto, (d) all divisions, continuations, reissues, and extensions of said applications and Letters Patent, and (e) the right to claim for any of said applications the full benefits and priority rights under the International Convention and any other international agreement to which the United States adheres; such right, title and interest to be held and enjoyed by the ASSIGNEE, its successors and assigns, to the full end of the term or terms for which any and all such Letters Patent may be granted as fully and entirely as would have been held and enjoyed by the ASSIGNOR had this Assignment not been made.

THE ASSIGNOR HEREBY AUTHORIZES AND REQUESTS the Commissioner of Patents and Trademarks to issue said Letters Patent to the ASSIGNEE as assignee of the entire interest, for the sole use and benefit of the ASSIGNEE, its successors and assigns.

THE ASSIGNOR HEREBY AGREES (a) to communicate to the ASSIGNEE, its successors and assigns, or their representatives or agents, all facts and information known or available to the ASSIGNOR respecting said invention or inventions, improvements, and

modifications including evidence for interference, reexamination, reissue, opposition, revocation, extension, or infringement purposes or other legal, judicial, or administrative proceedings, whenever requested by the ASSIGNEE; (b) to testify in person or by affidavit as required by the ASSIGNEE, its successors and assigns, in any such proceeding in the United States or a country foreign thereto; (c) to execute and deliver, upon request by the ASSIGNEE, all lawful papers including, but not limited to, original, divisional, continuation, and reissue applications, renewals, assignments, powers of attorney, oaths, affidavits, declarations, depositions; and (d) to provide all reasonable assistance to the ASSIGNEE, its successors and assigns, in obtaining and enforcing proper title in and protection for said invention or inventions, improvements, and modifications under the intellectual property laws of the United States and countries foreign thereto.

THE ASSIGNOR HEREBY REPRESENTS AND WARRANTS that the ASSIGNOR has the full and unencumbered right to sell, assign, and transfer the interests sold, assigned, and transferred herein, and that the ASSIGNOR has not executed and will not execute any document or instrument in conflict herewith.

Executed this 14th day of September, 2000.

John T. Pienkos
ASSIGNOR

State of WI)
) ss.
County of Milwaukee)

On this 14th day of September, 2000, before me, a notary public in and for said county, appeared John T. Pienkos, who is personally known to me to be the same person whose name is subscribed to the foregoing instrument, and he acknowledged that he signed, sealed, and delivered the said instrument as his free and voluntary act for the uses and purposes therein set forth.

Notary Public
Permanent
My Commission Expires: __

(Seal)

Endorsed: Angela T. Pienkos Date: 9/14/00
Angela T. Pienkos
Sole Manager, the ASSIGNEE

Endorsed: Date: 9/14/00
Nicole A. Dudzik,
President, the ASSIGNEE

OIPAP AKIMA-8 JUN 0 9 2016 PATENT & TRADEMARK OFFICE

I hereby certify that this correspondence is being transmitted by facsimile to the United States Patent Office, at (571) 273-2885. Date and Signature of transmittal: JUNE 9, 2016

IN THE UNITED STATES PATENT AND TRADEMARK OFFICE

Applicant: Pienkos, John T.

Serial No.: 14/120,873

Filing Date: July 7, 2014

Title: APPARATUS AND METHOD FOR PROVIDING PRODUCT LOCATION INFORMATION TO CUSTOMERS IN A STORE

Art Unit: 2876

AMENDMENT UNDER 37 CFR 1.312

Commissioner for Patents
P.O. Box 1450
Alexandria, VA 22313-1450

Dear Sir:

The Applicant respectfully submits the following amendments and remarks as a response to the Notice of Allowance dated May 18, 2016:

Amendments to the claims are reflected in the listing of claims that begins on page 2 of this paper.

Remarks begin on page 6 of this paper.

Amendment Under 37 CFR 1.312

Amendments to the Claims

This listing of claims will replace all prior versions, and listings, of claims in the Application:

Listing of Claims:

1.-19. (Cancelled).

20. (Previously Presented) A method of providing product location information within a store, the method comprising the steps of:

providing a plurality of devices including a mobile device, wherein the plurality of devices are in communication with one another, wherein at least one of the devices includes at least one user interface, and wherein at least one of the devices includes at least one information storage device including a database,

wherein the at least one information storage device includes both product location information and additional product-related information linking a product with an other product in a cross-referential manner;

receiving a product location inquiry regarding the product by way of the at least one user interface;

processing the product location inquiry at a signal processing device to determine a product location inquiry signal;

querying the at least one information storage device to obtain portions of the product location information and additional product-related information in response to the product location inquiry signal;

providing a product location information signal in response to the product location inquiry signal;

providing an output signal at an output device, the output signal being a response to the product location inquiry, wherein the output signal includes location information concerning the product and also provides at least one suggestion related to the other product.

21. (Previously Presented) The method of claim 20,

PAGE 10/18 * RCVD AT 6/9/2016 11:30:47 PM [Eastern Daylight Time] * SVR:W-PTOFAX-002/44 * DNIS:2732885 * CSID:2626434165 * DURATION (mm-ss):09-47

wherein the at least one user interface includes a mobile user interface and the mobile user interface is capable of determining a position of the mobile user interface within the store based upon a global positioning system (GPS) or other position-sensing capability.

22. (New) The method of claim 21, wherein the at least one user interface provides information concerning one or more products that are being specially promoted or that are located close by the at least one user interface.

23. (New) The method of claim 20, wherein the output device at which the output signal is provided is included by the at least one user interface.

24. (New) The method of claim 23, wherein the output signal provides at least one further suggestion to a customer in accordance with one or more customer preferences.

25. (New) The method of claim 23, wherein the output signal is based upon the product location information signal, wherein the at least one user interface provides further additional product-related information, and wherein the further additional product-related information includes at least one of: sale or promotion information regarding a sale or promotion relating to the product; a current stock of the product; a price of the product; a presence or absence of the product within the store; a time at which the product should be available at the store if the product is currently absent from the store; and an alternate way of obtaining the product if the product is currently absent from the store.

26. (New) The method of claim 23, wherein the at least one user interface includes a printer associated therewith at which can be printed at least some information comprised by the product location information signal.

PAGE 11/18 * RCVD AT 6/9/2016 11:30:47 PM [Eastern Daylight Time] * SVR:W-PTOFAX-002/44 * DNIS:2732885 * CSID:2626434165 * DURATION (mm-ss):09-47

Home Depot
Ex. 1003 - Page 125

Amendment Under 37 CFR 1.312

27. (New) The method of claim 26, wherein either (a) the at least some information that can be printed includes a map, or (b) the method additionally includes receiving an additional inquiry that is other than a product location-type inquiry.

28. (New) The method of claim 20, wherein the output signal provides at least one further suggestion to a customer in accordance with one or more customer preferences.

29. (New) The method of claim 28, further comprising obtaining identification information concerning the customer at the at least one user interface, or receiving an installation subsidy from one or more product manufacturers in relation to one or more products of the one or more product manufacturers being advertised.

30. (New) The method of claim 20, wherein either (a) the mobile device is able to provide at least some of the information to the at least one user interface, or (b) at least a first one of the at least one user interface is in wireless communication with either a central hub or at least a second one of the at least one user interface.

31. (New) The method of claim 20, wherein the output signal including the location information is provided by way of the mobile device.

32. (New) The method of claim 31, wherein a customer is provided with individualized treatment, or the additional product-related information also includes sale or promotion information regarding a sale or promotion relating to the product.

33. (New) The method of claim 32, wherein the additional product-related information also includes further information regarding at least one of: a current stock of the product; a price of the product; a presence or absence of the product within the store; a time at which the product should be available at the store if the product is currently absent from the store; and an alternate way of obtaining the product if the product is currently absent from the store.

PAGE 12/18 * RCVD AT 6/9/2016 11:30:47 PM [Eastern Daylight Time] * SVR:W-PTOFAX-002/44 * DNIS:2732885 * CSID:2626434165 * DURATION (mm-ss):09-47

34. (New) The method of claim 32, further comprising calculating a difference between a number of product location inquiries concerning the product, and a further number concerning how many of the product have been sold.

35. (New) The method of claim 20, further comprising either: additionally sending a signal for receipt by either store management or at least one other device to result in a providing of a special service or information to a customer; or determining a customer profile based upon product location inquiries received from the customer and providing at least one suggestion or information portion to the customer suited to the customer based upon the customer profile.

36. (New) The method of claim 35, wherein at least one of the devices is substantially stationary, and the at least one of the devices that is substantially stationary includes a first of the devices that includes a first user interface of the at least one user interface, and wherein the first device receives information from the mobile device.

37. (New) The method of claim 20, further comprising receiving an additional inquiry that is other than a product location-type inquiry, and wherein the processing includes performing voice recognition.

38. (New) The method of claim 37, wherein the product and other product are similar in name or are similar with respect to some other characteristic.

39. (New) The method of claim 38, wherein the product location inquiry and one or more other product location inquiries are processed to obtain customer preference information, or wherein the performing of voice recognition occurs subsequent to an imminent inquiry signal occurring.

PAGE 13/18 * RCVD AT 6/9/2016 11:30:47 PM [Eastern Daylight Time] * SVR:W-PTOFAX-002/44 * DNIS:2732885 * CSID:2626434165 * DURATION (mm-ss):09-47

Amendment Under 37 CFR 1.312

REMARKS/ARGUMENTS

The Applicant appreciates the Examiner's consideration of the present Application and the recent Notice of Allowance concerning this Application.

In the Notice of Allowability accompanying the Notice of Allowance, claims 20 and 21 were indicated to be allowable.

In view of the Notice of Allowability, the Applicants are submitting herewith an amendment containing new claims 22-39, all of which depend (directly or indirectly) from independent claim 20.

As stated in further detail below, it is submitted that all of these new claims find support in the present Application and that the entry of these new claims does not involve the addition of new matter to the present Application.

It is also submitted that, because all of the new claims 22-39 are dependent claims, all of these claims are allowable for at least the same reasons as claim 20 has been indicated to be allowable, and therefore that all of these new claims should be entered and allowed.

Comments Regarding New Dependent Claims 22-39

The Applicant respectfully requests entry of new dependent claims 22-39, submits that the language of these claims find support in the present Application, and submits that the entry of these new claims does not involve the addition of new matter to the present Application. The Applicant respectfully believes that each of claims 22-39 for example finds support in the present Application at the following locations. For simplicity, the locations noted below are locations from parent U.S. Patent No. 7,231,380, to which the present Application claims priority:

for new claim 22, it is believed that support can be found at col. 15, lines 35-41;

for new claim 23, it is believed that support can be found in the Abstract, at col. 11, lines 44-57, at col. 12, line 53 to col. 13, line 4, and at col. 13, lines 39-40;

for new claim 24, it is believed that support can be found at col. 14, lines 23-63;

PAGE 14/18 * RCVD AT 6/9/2016 11:30:47 PM [Eastern Daylight Time] * SVR:W-PTOFAX-002/44 * DNIS:2732885 * CSID:2626434165 * DURATION (mm-ss):09-47

for new claim 25, it is believed that support can be found at col. 3, lines 51-56, claims 1 and 5, col. 5, lines 32-4, col. 9, lines 51-56, and col. 15, lines 18-55;

for new claim 26, it is believed that support can be found at col. 13, lines 21-25;

for new claim 27, it is believed that support can be found at col. 12, lines 10-13, and at col. 13, lines 31-35 and lines 53-56;

for new claim 28, it is believed that support can be found at col. 14, lines 23-63;

for new claim 29, it is believed that support can be found at col. 7, lines 19-30 and col. 14, lines 38-62;

for new claim 30, it is believed that support can be found at col. 5, lines 17-23 and col. 6, lines 23-37;

for new claim 31, it is believed that support can be found at col. 14, lines 51-62;

for new claim 32, it is believed that support can be found at col. 15, lines 26-55;

for new claim 33, it is believed that support can be found at claims 1 and 5 of '380 patent, col. 5, lines 32-4, col. 9, lines 51-56, and col. 15, lines 18-55;

for new claim 34, it is believed that support can be found at col. 14, lines 8-13;

for new claim 35, it is believed that support can be found at col. 14, lines 15-22 and 45-50;

for new claim 36, it is believed that support can be found at claim 1 of '380 patent and col. 6, lines 23-36;

for new claim 37, it is believed that support can be found at col. 7, lines 43-57 and col. 12, lines 10-13;

for new claim 38, it is believed that support can be found at col. 9, lines 20-36; and

for new claim 39, it is believed that support can be found at col. 8, line 40 to col. 9, line 4 and col. 13, lines 57-66.

Therefore, for reasons such as (but not necessarily limited to) these, it is submitted that the addition of new claims 22-39 does not involve the addition of new matter and it is respectfully requested that these new claims be entered and allowed.

* * *

PAGE 15/18 * RCVD AT 6/9/2016 11:30:47 PM [Eastern Daylight Time] * SVR:W-PTOFAX-002/44 * DNIS:2732885 * CSID:2626434165 * DURATION (mm-ss):09-47

Home Depot
Ex. 1003 - Page 129

Amendment Under 37 CFR 1.312

Conclusion

In view of the above amendments and remarks, the Applicant respectfully requests reconsideration of the present Application and entry and allowance of the above discussed new claims 22-39.

The Applicant is submitting this Amendment with the Issue Fee for the present Application and, aside from that Issue Fee, the Applicant believes that no fees are due in connection with this Amendment. Also, it is believed that no extension of time is necessary in connection with this Application. Nevertheless, should any extension of time be deemed necessary, the Applicant hereby conditionally petitions for such extension of time. Also, should any further fees be deemed due and necessary to further prosecution of the present Application, aside from the Issue Fee provided herewith, the Applicant authorizes the Patent Office to charge all such additional fees to the credit card identified on the Credit Card Payment form accompanying this submission.

The Applicant invites the Examiner to contact the undersigned at the telephone number below if it is believed that discussion with the Applicant could advance the prosecution of the Application.

Respectfully,

John T. Pienkos
Applicant

Dated: June 9, 2016
10019 N. Miller Ct.
Mequon, WI 53092
(262) 643-4165

PAGE 16/18 * RCVD AT 6/9/2016 11:30:47 PM [Eastern Daylight Time] * SVR:W-PTOFAX-002/44 * DNIS:2732885 * CSID:2626434165 * DURATION (mm-ss):09-47

UNITED STATES PATENT AND TRADEMARK OFFICE

UNITED STATES DEPARTMENT OF COMMERCE
United States Patent and Trademark Office
Address: COMMISSIONER FOR PATENTS
P.O. Box 1450
Alexandria, Virginia 22313-1450
www.uspto.gov

APPLICATION NO.	FILING DATE	FIRST NAMED INVENTOR	ATTORNEY DOCKET NO.	CONFIRMATION NO.
14/120,873	07/07/2014	John T. Pienkos		2619

7590 06/23/2016

JOHN T. PIENKOS
10019 N. MILLER CT.
MEQUON, WI 53092

EXAMINER
RUDY, ANDREW J

ART UNIT	PAPER NUMBER
3687	

MAIL DATE	DELIVERY MODE
06/23/2016	PAPER

Please find below and/or attached an Office communication concerning this application or proceeding.

The time period for reply, if any, is set in the attached communication.

Supplemental Notice of Allowability	Application No. 14/120,873	Applicant(s) PIENKOS, JOHN T.	
	Examiner ANDREW JOSEPH RUDY	Art Unit 3687	AIA (First Inventor to File) Status No

-- The MAILING DATE of this communication appears on the cover sheet with the correspondence address--

All claims being allowable, PROSECUTION ON THE MERITS IS (OR REMAINS) CLOSED in this application. If not included herewith (or previously mailed), a Notice of Allowance (PTOL-85) or other appropriate communication will be mailed in due course. **THIS NOTICE OF ALLOWABILITY IS NOT A GRANT OF PATENT RIGHTS.** This application is subject to withdrawal from issue at the initiative of the Office or upon petition by the applicant. See 37 CFR 1.313 and MPEP 1308.

1. ☒ This communication is responsive to *09 June 2016 Rule 312 Amendment*.
   ☐ A declaration(s)/affidavit(s) under **37 CFR 1.130(b)** was/were filed on_____.
2. ☐ An election was made by the applicant in response to a restriction requirement set forth during the interview on _____; the restriction requirement and election have been incorporated into this action.
3. ☒ The allowed claim(s) is/are *20-39*. As a result of the allowed claim(s), you may be eligible to benefit from the **Patent Prosecution Highway** program at a participating intellectual property office for the corresponding application. For more information, please see http://www.uspto.gov/patents/init_events/pph/index.jsp or send an inquiry to PPHfeedback@uspto.gov .
4. ☐ Acknowledgment is made of a claim for foreign priority under 35 U.S.C. § 119(a)-(d) or (f).

   Certified copies:

   a) ☐ All b) ☐ Some *c) ☐ None of the:
   1. ☐ Certified copies of the priority documents have been received.
   2. ☐ Certified copies of the priority documents have been received in Application No. _____ .
   3. ☐ Copies of the certified copies of the priority documents have been received in this national stage application from the International Bureau (PCT Rule 17.2(a)).

   * Certified copies not received: _____.

Applicant has THREE MONTHS FROM THE "MAILING DATE" of this communication to file a reply complying with the requirements noted below. Failure to timely comply will result in ABANDONMENT of this application.
THIS THREE-MONTH PERIOD IS NOT EXTENDABLE.

5. ☐ CORRECTED DRAWINGS (as "replacement sheets") must be submitted.
   ☐ including changes required by the attached Examiner's Amendment / Comment or in the Office action of Paper No./Mail Date _____.

   Identifying indicia such as the application number (see 37 CFR 1.84(c)) should be written on the drawings in the front (not the back) of each sheet. Replacement sheet(s) should be labeled as such in the header according to 37 CFR 1.121(d).
6. ☐ DEPOSIT OF and/or INFORMATION about the deposit of BIOLOGICAL MATERIAL must be submitted. Note the attached Examiner's comment regarding REQUIREMENT FOR THE DEPOSIT OF BIOLOGICAL MATERIAL.

Attachment(s)

1. ☒ Notice of References Cited (PTO-892)
2. ☐ Information Disclosure Statements (PTO/SB/08), Paper No./Mail Date _____
3. ☐ Examiner's Comment Regarding Requirement for Deposit of Biological Material
4. ☐ Interview Summary (PTO-413), Paper No./Mail Date _____ .
5. ☒ Examiner's Amendment/Comment
6. ☒ Examiner's Statement of Reasons for Allowance
7. ☐ Other _____.

DETAILED ACTION

Notice of Pre-AIA or AIA Status

1. The present application is being examined under the pre-AIA first to invent provisions.

2. Applicant cancelled claims 1-19. Applicant's Rule 312 Amendment submitted June 9, 2016 added claims 22-39. Claims 20-39 are pending.

Allowable Subject Matter

3. Claims 20-39 are allowed.

4. The following is an examiner's statement of reasons for allowance: Applicant's March 30, 2016 REMARKS are convincing with regards to overcoming the previous office action. Claims 20-39 are allowed as the prior art, either alone or in combination, does not disclose Applicant's inventive claim language.

Further, claims 20-39 have been reviewed in light of Alice Corporation Pty. Ltd. v. CLS Bank International, et al., 573 U. S. ___ (2014).

Claims 20-39 are determined to be directed to patent-eligible subject matter and the Examiner does not consider any of the pending claims to be directed to an abstract idea. Even if the Examiner were to identify an abstract idea for any claim, then under a further analysis under Alice all claims would still be found to be patent eligible for the following reasons. The Examiner finds that when all of the elements of each claim are

considered individually and as an ordered combination, each claim contains an inventive concept which is directed to an application, a particular application, or a special application, of the identified abstract idea. Further the Examiner finds that issuance of a patent for any claim would not preempt the identified abstract idea, or the field of the identified abstract idea.

Any comments considered necessary by applicant must be submitted no later than the payment of the issue fee and, to avoid processing delays, should preferably accompany the issue fee. Such submissions should be clearly labeled "Comments on Statement of Reasons for Allowance."

5. Further pertinent reference of interest are noted on the attached PTO-892.

6. Any inquiry concerning this communication or earlier communications from the examiner should be directed to ANDREW JOSEPH RUDY whose telephone number is (571)272-6789. The examiner can normally be reached on Monday thru Friday.

Information regarding the status of an application may be obtained from the Patent Application Information Retrieval (PAIR) system. Status information for published applications may be obtained from either Private PAIR or Public PAIR. Status information for unpublished applications is available through Private PAIR only. For more information about the PAIR system, see http://pair-direct.uspto.gov. Should you have questions on access to the Private PAIR system, contact the Electronic Business Center (EBC) at 866-217-9197 (toll-free). If you would like assistance from a

USPTO Customer Service Representative or access to the automated information system, call 800-786-9199 (IN USA OR CANADA) or 571-272-1000.

/ANDREW JOSEPH RUDY/

Primary Examiner

Art Unit 3687

Response to Rule 312 Communication	Application No.	Applicant(s)
	14/120,873	PIENKOS, JOHN T.
	Examiner	**Art Unit**
	ANDREW JOSEPH RUDY	3687

-- The MAILING DATE of this communication appears on the cover sheet with the correspondence address --

1. ☒ The amendment filed on *09 June 2016* under 37 CFR 1.312 has been considered, and has been:

a) ☒ entered.

b) ☐ entered as directed to matters of form not affecting the scope of the invention.

c) ☐ disapproved because the amendment was filed after the payment of the issue fee.
Any amendment filed after the date the issue fee is paid must be accompanied by a petition under 37 CFR 1.313(c)(1) and the required fee to withdraw the application from issue.

d) ☐ disapproved. See explanation below.

e) ☐ entered in part. See explanation below.

f) Note the attached Corrected Notice of Allowability and the PTO-892, Notice of References cited.

/ANDREW JOSEPH RUDY/
Primary Examiner
Art Unit: 3687

Notice of References Cited	Application/Control No. 14/120,873	Applicant(s)/Patent Under Reexamination PIENKOS, JOHN T.	
	Examiner ANDREW JOSEPH RUDY	Art Unit 3687	Page 1 of 9

U.S. PATENT DOCUMENTS

*		Document Number Country Code-Number-Kind Code	Date MM-YYYY	Name	CPC Classification	US Classification
*	A	US-3,804,978 A	04-1974	Lemelson; Jerome H.	G06K17/0019	348/97
*	B	US-3,961,163 A	06-1976	Stevenson, III; Clarence H.	B65G47/503	235/441
*	C	US-4,521,677 A	06-1985	Sarwin; Herbert S.	G06F3/147	235/383
*	D	US-4,531,311 A	07-1985	Howard; Fred	G09F3/20	40/649
*	E	US-RE31,239 E	05-1983	Lemelson; Jerome H.	G06K17/0016	348/107
*	F	US-4,539,631 A	09-1985	Lieberman; Gilbert R.	F21V1/00	362/351
*	G	US-4,567,359 A	01-1986	Lockwood; Lawrence B.	G06Q30/02	235/381
*	H	US-4,817,043 A	03-1989	Brown; Johnny M.	G09B29/106	347/900
*	I	US-4,831,367 A	05-1989	Baus; Heinz G.	G06F17/30952	345/168
*	J	US-4,920,488 A	04-1990	Filley; Oliver D.	G06Q10/087	235/385
*	K	US-5,047,614 A	09-1991	Bianco; James S.	G06K17/00	235/382
*	L	US-5,127,674 A	07-1992	Lamphere; William H.	B42D1/001	283/36
*	M	US-5,146,404 A	09-1992	Calloway; Jack D.	G06Q10/0875	705/1.1

FOREIGN PATENT DOCUMENTS

*		Document Number Country Code-Number-Kind Code	Date MM-YYYY	Country	Name	CPC Classification
	N					
	O					
	P					
	Q					
	R					
	S					
	T					

NON-PATENT DOCUMENTS

*		Include as applicable: Author, Title Date, Publisher, Edition or Volume, Pertinent Pages)
*	U	Allison Galosich, "Techno-tracking", National Provisioner. Northbrook, May 1998, vol. 212, Iss. 5, p. 74, 3 pgs.
*	V	Web Pages From Website of Marcole Interactive Systems, www.marcole.com, Printed on May 20, 2005, 74 Pages.
*	W	"Frustrated Shoppers Turn to GPS", Oddly Enough--Reuters, Yahoo! News, Apr. 30, 2003, printed on May 17, 2003, 2 Pages.
*	X	Web pages concerning Symbol Technologies and Telxon Corporation, obtained at website of Symbol Technologies, www.symbol.com, printed on May 17, 2003, 72 Pages.

*A copy of this reference is not being furnished with this Office action. (See MPEP § 707.05(a).)
Dates in MM-YYYY format are publication dates. Classifications may be US or foreign.

Notice of References Cited	Application/Control No. 14/120,873	Applicant(s)/Patent Under Reexamination PIENKOS, JOHN T.	
	Examiner ANDREW JOSEPH RUDY	Art Unit 3687	Page 2 of 9

U.S. PATENT DOCUMENTS

*		Document Number Country Code-Number-Kind Code	Date MM-YYYY	Name	CPC Classification	US Classification
*	A	US-5,215,213 A	06-1993	Nestler; Richard F.	A47F10/02	186/55
*	B	US-5,240,789 A	08-1993	Breen; Thomas J.	G09F3/02	40/626
*	C	US-5,241,657 A	08-1993	Fine; Brandt J.	G06F3/147	345/501
*	D	US-5,250,789 A	10-1993	Johnsen; Edward L.	B62B3/142	235/383
*	E	US-5,309,355 A	05-1994	Lockwood; Lawrence B.	G06Q10/025	235/381
*	F	US-5,349,678 A	09-1994	Morris; Michael D.	G06F8/60	709/203
*	G	US-5,401,947 A	03-1995	Poland; Terrell A.	G09F9/30	235/383
*	H	US-5,448,696 A	09-1995	Shimada; Shigeru	G06T17/05	345/427
*	I	US-5,568,645 A	10-1996	Morris; Michael D.	G06F8/60	709/203
*	J	US-5,572,015 A	11-1996	Bird; Neil C.	H04N3/1512	250/208.1
*	K	US-5,572,653 A	11-1996	DeTemple; William C.	G06K17/0022	235/383
*	L	US-5,576,951 A	11-1996	Lockwood; Lawrence B.	G06Q10/025	235/381
*	M	US-5,630,068 A	05-1997	Vela; Leo	A47F10/02	235/375

FOREIGN PATENT DOCUMENTS

*		Document Number Country Code-Number-Kind Code	Date MM-YYYY	Country	Name	Classification
	N					
	O					
	P					
	Q					
	R					
	S					
	T					

NON-PATENT DOCUMENTS

*		Include as applicable: Author, Title Date, Publisher, Edition or Volume, Pertinent Pages)
*	U	Web pages of TreoSystems, Inc., available at www.treosystems.com, Copyright 2010, printed on Oct. 25, 2012, 19 pages.
*	V	"Meijer Launches Mobile In-Store Product Locator", Aug. 31, 2010, 2 pgs., www.progressivegrocer.com/top-story-meijer.sub.--launches.sub.--mobile.su- b.--in.sub.--store.sub.--product.sub.--locator-30356.html.
*	W	"Aisle411", obtained at en.wikipedia.org/wiki/Aisle411, printed on Oct. 25, 2012, 1 page.
*	X	"Mobile:The Biggest Change to Hit Retailing In 50 Years", Jul. 9, 2012, 4 pgs., www.forbes.com/sites/ciocentral/2012/07/09/mobile-the-biggest-chang- e-to-hit-retailing-in-50-years.

*A copy of this reference is not being furnished with this Office action. (See MPEP § 707.05(a).)
Dates in MM-YYYY format are publication dates. Classifications may be US or foreign.

Notice of References Cited	Application/Control No. 14/120,873	Applicant(s)/Patent Under Reexamination PIENKOS, JOHN T.	
	Examiner ANDREW JOSEPH RUDY	Art Unit 3687	Page 3 of 9

U.S. PATENT DOCUMENTS

*		Document Number Country Code-Number-Kind Code	Date MM-YYYY	Name	CPC Classification	US Classification
*	A	US-5,640,002 A	06-1997	Ruppert; Jonathan Paul	G06K7/0008	235/383
*	B	US-5,664,110 A	09-1997	Green; Jonathan B.	G06Q10/087	705/26.81
*	C	US-5,671,436 A	09-1997	Morris; Michael D.	G06F8/60	1/1
*	D	US-5,697,061 A	12-1997	Krueger; Thomas E.	G06K7/0008	235/383
*	E	US-5,715,314 A	02-1998	Payne; Andrew C.	G06Q10/087	705/26.35
*	F	US-5,717,866 A	02-1998	Naftzger; Walter L.	G06Q30/02	705/14.38
*	G	US-5,765,142 A	06-1998	Allred; Scott K.	G06Q20/20	705/16
*	H	US-5,771,003 A	06-1998	Seymour; Arthur F.	G06K7/065	209/571
*	I	US-5,859,414 A	01-1999	Grimes; Douglas Michael	G06K17/0022	235/375
*	J	US-5,872,271 A	02-1999	Cole; Glenn S.	A01H5/10	424/764
*	K	US-5,872,850 A	02-1999	Klein; Saul Charles	G06Q30/06	705/51
*	L	US-5,887,271 A	03-1999	Powell; Ken R.	G06Q20/20	235/383
*	M	US-5,890,135 A	03-1999	Powell; Ken R.	G06Q20/20	235/383

FOREIGN PATENT DOCUMENTS

*		Document Number Country Code-Number-Kind Code	Date MM-YYYY	Country	Name	Classification
	N					
	O					
	P					
	Q					
	R					
	S					
	T					

NON-PATENT DOCUMENTS

*		Include as applicable: Author, Title Date, Publisher, Edition or Volume, Pertinent Pages)
	U	
	V	
	W	
	X	

*A copy of this reference is not being furnished with this Office action. (See MPEP § 707.05(a).)
Dates in MM-YYYY format are publication dates. Classifications may be US or foreign.

Notice of References Cited	Application/Control No. 14/120,873	Applicant(s)/Patent Under Reexamination PIENKOS, JOHN T.	
	Examiner ANDREW JOSEPH RUDY	Art Unit 3687	Page 4 of 9

U.S. PATENT DOCUMENTS

*		Document Number Country Code-Number-Kind Code	Date MM-YYYY	Name	CPC Classification	US Classification
*	A	US-5,895,454 A	04-1999	Harrington; Juliette	G06Q30/06	705/26.8
*	B	US-5,909,492 A	06-1999	Payne; Andrew C.	G06Q10/087	705/26.1
*	C	US-5,924,078 A	07-1999	Naftzger; Walter L.	G06Q20/20	705/14.26
*	D	US-5,950,173 A	09-1999	Perkowski; Thomas J.	G06Q30/02	235/375
*	E	US-5,963,948 A	10-1999	Shilcrat; Esther Dina	G06F17/30855	340/995.19
*	F	US-5,966,695 A	10-1999	Melchione; Anthony R.	G06Q30/02	705/35
*	G	US-5,967,343 A	10-1999	Dufresne; Ronald	G09F3/204	211/86.01
*	H	US-5,979,757 A	11-1999	Tracy; William X.	G06K17/00	186/56
*	I	US-5,987,499 A	11-1999	Morris; Michael D.	G06F8/60	709/203
*	J	US-5,991,726 A	11-1999	Immarco; Peter	G10L15/22	704/270
*	K	US-5,995,015 A	11-1999	DeTemple; William C.	G06K17/0022	340/5.9
*	L	US-6,000,610 A	12-1999	Talbott; Theresa G.	B42D15/00	186/52
*	M	US-6,006,196 A	12-1999	Feigin; Gerald E.	G06Q10/08	705/28

FOREIGN PATENT DOCUMENTS

*		Document Number Country Code-Number-Kind Code	Date MM-YYYY	Country	Name	Classification
	N					
	O					
	P					
	Q					
	R					
	S					
	T					

NON-PATENT DOCUMENTS

*		Include as applicable: Author, Title Date, Publisher, Edition or Volume, Pertinent Pages)
	U	
	V	
	W	
	X	

*A copy of this reference is not being furnished with this Office action. (See MPEP § 707.05(a).)
Dates in MM-YYYY format are publication dates. Classifications may be US or foreign.

Notice of References Cited	Application/Control No. 14/120,873	Applicant(s)/Patent Under Reexamination PIENKOS, JOHN T.	
	Examiner ANDREW JOSEPH RUDY	Art Unit 3687	Page 5 of 9

U.S. PATENT DOCUMENTS

*		Document Number Country Code-Number-Kind Code	Date MM-YYYY	Name	CPC Classification	US Classification
*	A	US-6,016,481 A	01-2000	Failing, Jr.; Bruce F	G06Q10/02	705/16
*	B	US-6,061,646 A	05-2000	Martino; Michael John	G06F17/275	379/88.06
*	C	US-6,076,071 A	06-2000	Freeny, Jr.; Charles C.	G06Q20/20	705/14.1
*	D	US-6,091,956 A	07-2000	Hollenberg; Dennis D.	G06Q30/02	455/456.5
*	E	US-6,101,483 A	08-2000	Petrovich; Adam	G06Q20/202	705/21
*	F	US-6,112,206 A	08-2000	Morris; Michael D.	G06F8/60	1/1
*	G	US-6,112,523 A	09-2000	Kamo; Keisuke	F02B37/013	60/600
*	H	US-6,119,101 A	09-2000	Peckover; Douglas L.	G06Q30/02	705/14.17
*	I	US-6,122,523 A	09-2000	Zicker; Robert G.	G11B23/0316	455/419
*	J	US-6,125,353 A	09-2000	Yagasaki; Isao	G06Q30/06	705/26.62
*	K	US-6,129,274 A	10-2000	Suzuki; Hikaru	G06Q20/20	235/380
*	L	US-6,129,276 A	10-2000	Jelen; William M.	B62B3/1408	235/375
*	M	US-6,144,848 A	11-2000	Walsh; Joseph F.	G06K7/10	235/379

FOREIGN PATENT DOCUMENTS

*		Document Number Country Code-Number-Kind Code	Date MM-YYYY	Country	Name	Classification
	N					
	O					
	P					
	Q					
	R					
	S					
	T					

NON-PATENT DOCUMENTS

*		Include as applicable: Author, Title Date, Publisher, Edition or Volume, Pertinent Pages)
	U	
	V	
	W	
	X	

*A copy of this reference is not being furnished with this Office action. (See MPEP § 707.05(a).)
Dates in MM-YYYY format are publication dates. Classifications may be US or foreign.

Notice of References Cited	Application/Control No. 14/120,873	Applicant(s)/Patent Under Reexamination PIENKOS, JOHN T.	
	Examiner ANDREW JOSEPH RUDY	Art Unit 3687	Page 6 of 9

U.S. PATENT DOCUMENTS

*		Document Number Country Code-Number-Kind Code	Date MM-YYYY	Name	CPC Classification	US Classification
*	A	US-6,199,099 B1	03-2001	Gershman; Anatole Vitaly	G06F17/30867	707/999.003
*	B	US-6,230,199 B1	05-2001	Revashetti; Siddaraya B.	G06Q10/087	705/14.66
*	C	US-6,250,006 B1	06-2001	Berrier; Phil	B42F13/12	40/308
*	D	US-6,289,319 B1	09-2001	Lockwood; Lawrence B.	G06Q20/18	705/35
*	E	US-6,354,493 B1	03-2002	Mon; Jorge	G06K7/0008	235/380
*	F	US-6,381,583 B1	04-2002	Kenney; John A.	G06Q30/06	703/6
*	G	US-6,430,530 B1	08-2002	Ng; Alan	G11B20/00007	341/51
*	H	US-6,430,554 B1	08-2002	Rothschild; Leigh M.	G06F17/30879	1/1
*	I	US-6,434,530 B1	08-2002	Sloane; Martin A.	G06Q20/20	235/383
*	J	US-6,442,530 B1	08-2002	Miller; Steven D.	G06Q10/087	705/16
*	K	US-6,533,173 B2	03-2003	Benyak; Donald A.	G06Q20/201	235/378
*	L	US-6,539,269 B1	03-2003	Jarrow; Tamara L.	G09B5/00	434/107
*	M	US-6,543,684 B1	04-2003	White; Daniel F.	G06F3/04886	235/379

FOREIGN PATENT DOCUMENTS

*		Document Number Country Code-Number-Kind Code	Date MM-YYYY	Country	Name	Classification
	N					
	O					
	P					
	Q					
	R					
	S					
	T					

NON-PATENT DOCUMENTS

*		Include as applicable: Author, Title Date, Publisher, Edition or Volume, Pertinent Pages)
	U	
	V	
	W	
	X	

*A copy of this reference is not being furnished with this Office action. (See MPEP § 707.05(a).)
Dates in MM-YYYY format are publication dates. Classifications may be US or foreign.

Notice of References Cited	Application/Control No. 14/120,873	Applicant(s)/Patent Under Reexamination PIENKOS, JOHN T.	
	Examiner ANDREW JOSEPH RUDY	Art Unit 3687	Page 7 of 9

U.S. PATENT DOCUMENTS

*		Document Number Country Code-Number-Kind Code	Date MM-YYYY	Name	CPC Classification	US Classification
*	A	US-6,552,663 B2	04-2003	Swartzel; Stanley J.	G06Q10/08	235/383
*	B	US-6,556,840 B2	04-2003	Zicker; Robert G.	G11B23/0316	455/419
*	C	US-6,587,835 B1	07-2003	Treyz; G. Victor	G06Q20/12	705/14.64
*	D	US-6,604,681 B1	08-2003	Burke; Raymond R.	B62B3/1424	235/379
*	E	US-6,625,581 B1	09-2003	Perkowski; Thomas J.	G06F17/30879	705/14.34
*	F	US-6,644,547 B1	11-2003	White; Daniel F.	G06Q20/04	235/381
*	G	US-6,694,359 B1	02-2004	Morris; Michael D.	G06F8/60	709/219
*	H	US-6,774,765 B1	08-2004	Goodwin, III; John C.	G01S5/0231	340/539.18
*	I	US-6,820,062 B1	11-2004	Gupta; Om P.	B62B3/1408	705/16
*	J	US-6,850,252 B1	02-2005	Hoffberg; Steven M.	G06K9/00369	348/E7.061
*	K	US-6,974,078 B1	12-2005	Simon; David	G06Q30/06	235/375
*	L	US-7,010,498 B1	03-2006	Berstis; Viktors	G06Q10/087	705/14.36
*	M	US-7,010,508 B1	03-2006	Lockwood; Lawrence B.	G06Q40/00	705/35

FOREIGN PATENT DOCUMENTS

*		Document Number Country Code-Number-Kind Code	Date MM-YYYY	Country	Name	Classification
	N					
	O					
	P					
	Q					
	R					
	S					
	T					

NON-PATENT DOCUMENTS

*		Include as applicable: Author, Title Date, Publisher, Edition or Volume, Pertinent Pages)
	U	
	V	
	W	
	X	

*A copy of this reference is not being furnished with this Office action. (See MPEP § 707.05(a).)
Dates in MM-YYYY format are publication dates. Classifications may be US or foreign.

Notice of References Cited	Application/Control No. 14/120,873	Applicant(s)/Patent Under Reexamination PIENKOS, JOHN T.	
	Examiner ANDREW JOSEPH RUDY	Art Unit 3687	Page 8 of 9

U.S. PATENT DOCUMENTS

*		Document Number Country Code-Number-Kind Code	Date MM-YYYY	Name	CPC Classification	US Classification
*	A	US-7,085,775 B2	08-2006	Short, III; Charles F.	G01C21/36	1/1
*	B	US-7,146,156 B2	12-2006	Zicker; Robert G.	G11B23/0316	455/411
*	C	US-7,171,378 B2	01-2007	Petrovich; Adam	G06Q10/087	705/26.43
*	D	US-7,228,282 B1	06-2007	Philyaw; Jeffry Jovan	G06Q10/087	705/26.9
*	E	US-7,231,380 B1	06-2007	Pienkos; John Thaddeus	G06Q10/087	1/1
*	F	US-7,302,429 B1	11-2007	Wanker; William Paul	G06Q30/02	1/1
*	G	US-7,536,318 B1	05-2009	Wolfe; Don P.	G06Q30/0609	705/26.35
*	H	US-7,542,919 B1	06-2009	Mueller; Raymond J.	G06Q10/087	705/16
*	I	US-7,546,318 B2	06-2009	Bates; David J.	G06Q10/109	1/1
*	J	US-7,565,308 B1	07-2009	Bollay; Denison W.	G06Q30/06	705/26.41
*	K	US-7,596,786 B2	09-2009	Philyaw; Jeffry Jovan	G06Q30/02	717/174
*	L	US-7,640,183 B1	12-2009	Burns; Dale	G06Q30/0225	705/14.38
*	M	US-7,819,315 B1	10-2010	Pienkos; John Thaddeus	G06Q10/087	235/383

FOREIGN PATENT DOCUMENTS

*		Document Number Country Code-Number-Kind Code	Date MM-YYYY	Country	Name	Classification
	N					
	O					
	P					
	Q					
	R					
	S					
	T					

NON-PATENT DOCUMENTS

*		Include as applicable: Author, Title Date, Publisher, Edition or Volume, Pertinent Pages)
	U	
	V	
	W	
	X	

*A copy of this reference is not being furnished with this Office action. (See MPEP § 707.05(a).)
Dates in MM-YYYY format are publication dates. Classifications may be US or foreign.

Notice of References Cited	Application/Control No. 14/120,873	Applicant(s)/Patent Under Reexamination PIENKOS, JOHN T.	
	Examiner ANDREW JOSEPH RUDY	Art Unit 3687	Page 9 of 9

U.S. PATENT DOCUMENTS

*		Document Number Country Code-Number-Kind Code	Date MM-YYYY	Name	CPC Classification	US Classification
*	A	US-7,886,017 B2	02-2011	Philyaw; Jeffry Jovan	G06F17/30876	709/216
*	B	US-7,894,936 B2	02-2011	Walker; Jay S.	G06Q10/087	700/236
*	C	US-7,979,576 B2	07-2011	Philyaw; Jeffry Jovan	G06F17/30876	709/238
*	D	US-8,140,398 B1	03-2012	Boesjes; Eimar M.	G06Q10/087	705/26.1
*	E	US-8,170,915 B2	05-2012	Borders; Louis H.	G06Q10/0631	705/26.9
*	F	US-8,204,797 B2	06-2012	Wanker; William Paul	G06Q30/02	705/26.1
*	G	US-8,542,669 B2	09-2013	Baten; Ben	H04L12/66	370/352
*	H	US-8,548,860 B2	10-2013	Junger; Peter J.	G06Q20/203	705/24
*	I	US-2009/0012704 A1	01-2009	Franco; Bruce	G01C21/20	701/532
*	J	US-6,119,099 A	09-2000	Walker; Jay S.	G06Q10/087	705/14.14
*	K	US-6,553,173 B1	04-2003	Goto; Akio	G02B6/255	385/137
	L	US-				
	M	US-				

FOREIGN PATENT DOCUMENTS

*		Document Number Country Code-Number-Kind Code	Date MM-YYYY	Country	Name	Classification
	N					
	O					
	P					
	Q					
	R					
	S					
	T					

NON-PATENT DOCUMENTS

*		Include as applicable: Author, Title Date, Publisher, Edition or Volume, Pertinent Pages)
	U	
	V	
	W	
	X	

*A copy of this reference is not being furnished with this Office action. (See MPEP § 707.05(a).)
Dates in MM-YYYY format are publication dates. Classifications may be US or foreign.

Issue Classification	Application/Control No.	Applicant(s)/Patent Under Reexamination
	14120873	PIENKOS, JOHN T.
	Examiner	**Art Unit**
	ANDREW JOSEPH RUDY	3687

CPC

Symbol					Type	Version
G06Q		30	/	0639	F	2013-01-01
			/			
			/			
			/			
			/			
			/			
			/			
			/			
			/			
			/			
			/			
			/			
			/			
			/			
			/			

CPC Combination Sets

Symbol					Type	Set	Ranking	Version
			/					
			/					

NONE (Assistant Examiner)	(Date)	**Total Claims Allowed:** 19	
/ANDREW JOSEPH RUDY/ Primary Examiner.Art Unit 3687 (Primary Examiner)	5/13/2016 (Date)	O.G. Print Claim(s) 1	O.G. Print Figure 5

Issue Classification	Application/Control No.	Applicant(s)/Patent Under Reexamination
	14120873	PIENKOS, JOHN T.
	Examiner	**Art Unit**
	ANDREW JOSEPH RUDY	3687

US ORIGINAL CLASSIFICATION		INTERNATIONAL CLASSIFICATION	
CLASS	SUBCLASS	CLAIMED	NON-CLAIMED
705	26.9	G 0 6 Q 30 / 00 (2012.01.01)	

CROSS REFERENCE(S)					
CLASS	SUBCLASS (ONE SUBCLASS PER BLOCK)				

NONE		Total Claims Allowed:	
(Assistant Examiner)	(Date)	19	
/ANDREW JOSEPH RUDY/ Primary Examiner.Art Unit 3687	5/13/2016	O.G. Print Claim(s)	O.G. Print Figure
(Primary Examiner)	(Date)	1	5

Issue Classification	Application/Control No.	Applicant(s)/Patent Under Reexamination
	14120873	PIENKOS, JOHN T.
	Examiner	**Art Unit**
	ANDREW JOSEPH RUDY	3687

☐ Claims renumbered in the same order as presented by applicant ☐ CPA ☐ T.D. ☐ R.1.47

Final	Original	Final	Original	Final	Original	Final	Original	Final	Original	Final	Original	Final	Original	Final	Original
1	20	17	37												
2	21	18	38												
3	22	19	39												
4	23														
5	24														
6	25														
7	27														
8	28														
9	29														
10	30														
11	31														
12	32														
13	33														
14	34														
15	35														
16	36														

NONE (Assistant Examiner)	(Date)	**Total Claims Allowed:** 19	
/ANDREW JOSEPH RUDY/ Primary Examiner.Art Unit 3687 (Primary Examiner)	5/13/2016 (Date)	O.G. Print Claim(s) 1	O.G. Print Figure 5

Issue Classification	Application/Control No.	Applicant(s)/Patent Under Reexamination
	14120873	PIENKOS, JOHN T.
	Examiner	**Art Unit**
	ANDREW JOSEPH RUDY	3687

CPC

Symbol					Type	Version
G06Q		30	/	0639	F	2013-01-01
			/			
			/			
			/			
			/			
			/			
			/			
			/			
			/			
			/			
			/			
			/			
			/			
			/			
			/			

CPC Combination Sets

Symbol					Type	Set	Ranking	Version
			/					
			/					

NONE (Assistant Examiner)	(Date)	**Total Claims Allowed:** 20	
/ANDREW JOSEPH RUDY/ Primary Examiner.Art Unit 3687 (Primary Examiner)	5/13/2016 (Date)	O.G. Print Claim(s) 1	O.G. Print Figure 5

Issue Classification	Application/Control No.	Applicant(s)/Patent Under Reexamination
	14120873	PIENKOS, JOHN T.
	Examiner	**Art Unit**
	ANDREW JOSEPH RUDY	3687

US ORIGINAL CLASSIFICATION		INTERNATIONAL CLASSIFICATION	
CLASS	SUBCLASS	CLAIMED	NON-CLAIMED
705	26.9	G 0 6 Q 30 / 00 (2012.01.01)	

CROSS REFERENCE(S)					
CLASS	SUBCLASS (ONE SUBCLASS PER BLOCK)				

NONE		Total Claims Allowed:	
(Assistant Examiner)	(Date)	20	
/ANDREW JOSEPH RUDY/ Primary Examiner.Art Unit 3687	5/13/2016	O.G. Print Claim(s)	O.G. Print Figure
(Primary Examiner)	(Date)	1	5

Issue Classification	Application/Control No.	Applicant(s)/Patent Under Reexamination
	14120873	PIENKOS, JOHN T.
	Examiner	**Art Unit**
	ANDREW JOSEPH RUDY	3687

☐ Claims renumbered in the same order as presented by applicant ☐ CPA ☐ T.D. ☐ R.1.47

Final	Original	Final	Original	Final	Original	Final	Original	Final	Original	Final	Original	Final	Original	Final	Original
1	20	17	36												
2	21	18	37												
3	22	19	38												
4	23	20	39												
5	24														
6	25														
7	26														
8	27														
9	28														
10	29														
11	30														
12	31														
13	32														
14	33														
15	34														
16	35														

NONE (Assistant Examiner)	(Date)	**Total Claims Allowed:** 20	
/ANDREW JOSEPH RUDY/ Primary Examiner.Art Unit 3687 (Primary Examiner)	5/13/2016 (Date)	O.G. Print Claim(s) 1	O.G. Print Figure 5

UNITED STATES PATENT AND TRADEMARK OFFICE

UNITED STATES DEPARTMENT OF COMMERCE
United States Patent and Trademark Office
Address: COMMISSIONER FOR PATENTS
P.O. Box 1450
Alexandria, Virginia 22313-1450
www.uspto.gov

APPLICATION NO.	FILING DATE	FIRST NAMED INVENTOR	ATTORNEY DOCKET NO.	CONFIRMATION NO.
14/120,873	07/07/2014	John T. Pienkos		2619

7590 07/01/2016

JOHN T. PIENKOS
10019 N. MILLER CT.
MEQUON, WI 53092

EXAMINER
RUDY, ANDREW J

ART UNIT	PAPER NUMBER
3687	

MAIL DATE	DELIVERY MODE
07/01/2016	PAPER

Please find below and/or attached an Office communication concerning this application or proceeding.

The time period for reply, if any, is set in the attached communication.

UNITED STATES DEPARTMENT OF COMMERCE
U.S. Patent and Trademark Office
Address : COMMISSIONER FOR PATENTS
P.O. Box 1450
Alexandria, Virginia 22313-1450

APPLICATION NO./ CONTROL NO.	FILING DATE	FIRST NAMED INVENTOR / PATENT IN REEXAMINATION	ATTORNEY DOCKET NO.
14/120,873	07 July, 2014	PIENKOS, JOHN T.	

		EXAMINER	
JOHN T. PIENKOS 10019 N. MILLER CT. MEQUON, WI 53092		ANDREW JOSEPH RUDY	
		ART UNIT	PAPER
		3687	20160628

DATE MAILED:

Please find below and/or attached an Office communication concerning this application or proceeding.

Commissioner for Patents

United States Patent No. 4,359,631 was inadvertantly not included in the June 23, 2016 Supplemental Notice of Allowability (SNA). This patent is now included in the record. See the attached Notice of References Cited, PTO-892. Claims 20-39 remain allowed for the same reasons articulated from the June 23, 2016 SNA.

/ANDREW JOSEPH RUDY/
Primary Examiner
Art Unit: 3687

PTO-90C (Rev.04-03)

Notice of References Cited	Application/Control No. 14/120,873	Applicant(s)/Patent Under Reexamination PIENKOS, JOHN T.	
	Examiner ANDREW JOSEPH RUDY	Art Unit 3687	Page 1 of 1

U.S. PATENT DOCUMENTS

*		Document Number Country Code-Number-Kind Code	Date MM-YYYY	Name	CPC Classification	US Classification
*	A	US-4,359,631 A	11-1982	Lockwood; Lawrence B.	G06Q10/02	235/381
	B	US-				
	C	US-				
	D	US-				
	E	US-				
	F	US-				
	G	US-				
	H	US-				
	I	US-				
	J	US-				
	K	US-				
	L	US-				
	M	US-				

FOREIGN PATENT DOCUMENTS

*		Document Number Country Code-Number-Kind Code	Date MM-YYYY	Country	Name	CPC Classification
	N					
	O					
	P					
	Q					
	R					
	S					
	T					

NON-PATENT DOCUMENTS

*		Include as applicable: Author, Title Date, Publisher, Edition or Volume, Pertinent Pages)
	U	
	V	
	W	
	X	

*A copy of this reference is not being furnished with this Office action. (See MPEP § 707.05(a).)
Dates in MM-YYYY format are publication dates. Classifications may be US or foreign.

UNITED STATES PATENT AND TRADEMARK OFFICE

UNITED STATES DEPARTMENT OF COMMERCE
United States Patent and Trademark Office
Address: COMMISSIONER FOR PATENTS
P.O. Box 1450
Alexandria, Virginia 22313-1450
www.uspto.gov

APPLICATION NO.	FILING DATE	FIRST NAMED INVENTOR	ATTORNEY DOCKET NO.	CONFIRMATION NO.
14/120,873	07/07/2014	John T. Pienkos		2619

7590 07/14/2016

JOHN T. PIENKOS
10019 N. MILLER CT.
MEQUON, WI 53092

EXAMINER
RUDY, ANDREW J

ART UNIT	PAPER NUMBER
3687	

MAIL DATE	DELIVERY MODE
07/14/2016	PAPER

Please find below and/or attached an Office communication concerning this application or proceeding.

The time period for reply, if any, is set in the attached communication.

Applicant-Initiated Interview Summary	Application No.	Applicant(s)	
	14/120,873	PIENKOS, JOHN T.	
	Examiner	Art Unit	
	ANDREW JOSEPH RUDY	3687	

All participants (applicant, applicant's representative, PTO personnel):

(1) *ANDREW JOSEPH RUDY*. (3)_____.

(2) *John Pienkos*. (4)_____.

Date of Interview: *07 July 2016*.

Type: ☒ Telephonic ☐ Video Conference
☐ Personal [copy given to: ☐ applicant ☐ applicant's representative]

Exhibit shown or demonstration conducted: ☐ Yes ☒ No.
If Yes, brief description: _____.

Issues Discussed ☐101 ☐112 ☐102 ☐103 ☒Others
(For each of the checked box(es) above, please describe below the issue and detailed description of the discussion)

Claim(s) discussed: *n/a*.

Identification of prior art discussed: *none*.

Substance of Interview
(For each issue discussed, provide a detailed description and indicate if agreement was reached. Some topics may include: identification or clarification of a reference or a portion thereof, claim interpretation, proposed amendments, arguments of any applied references etc...)

PTO 892 will include further art to complete the record.

Applicant recordation instructions: The formal written reply to the last Office action must include the substance of the interview. (See MPEP section 713.04). If a reply to the last Office action has already been filed, applicant is given a non-extendable period of the longer of one month or thirty days from this interview date, or the mailing date of this interview summary form, whichever is later, to file a statement of the substance of the interview

Examiner recordation instructions: Examiners must summarize the substance of any interview of record. A complete and proper recordation of the substance of an interview should include the items listed in MPEP 713.04 for complete and proper recordation including the identification of the general thrust of each argument or issue discussed, a general indication of any other pertinent matters discussed regarding patentability and the general results or outcome of the interview, to include an indication as to whether or not agreement was reached on the issues raised.

☐ Attachment

/ANDREW JOSEPH RUDY/
Primary Examiner, Art Unit 3687

Summary of Record of Interview Requirements

Manual of Patent Examining Procedure (MPEP), Section 713.04, Substance of Interview Must be Made of Record
A complete written statement as to the substance of any face-to-face, video conference, or telephone interview with regard to an application must be made of record in the application whether or not an agreement with the examiner was reached at the interview.

Title 37 Code of Federal Regulations (CFR) § 1.133 Interviews
Paragraph (b)

In every instance where reconsideration is requested in view of an interview with an examiner, a complete written statement of the reasons presented at the interview as warranting favorable action must be filed by the applicant. An interview does not remove the necessity for reply to Office action as specified in §§ 1.111, 1.135. (35 U.S.C. 132)

37 CFR §1.2 Business to be transacted in writing.
All business with the Patent or Trademark Office should be transacted in writing. The personal attendance of applicants or their attorneys or agents at the Patent and Trademark Office is unnecessary. The action of the Patent and Trademark Office will be based exclusively on the written record in the Office. No attention will be paid to any alleged oral promise, stipulation, or understanding in relation to which there is disagreement or doubt.

The action of the Patent and Trademark Office cannot be based exclusively on the written record in the Office if that record is itself incomplete through the failure to record the substance of interviews.

It is the responsibility of the applicant or the attorney or agent to make the substance of an interview of record in the application file, unless the examiner indicates he or she will do so. It is the examiner's responsibility to see that such a record is made and to correct material inaccuracies which bear directly on the question of patentability.

Examiners must complete an Interview Summary Form for each interview held where a matter of substance has been discussed during the interview by checking the appropriate boxes and filling in the blanks. Discussions regarding only procedural matters, directed solely to restriction requirements for which interview recordation is otherwise provided for in Section 812.01 of the Manual of Patent Examining Procedure, or pointing out typographical errors or unreadable script in Office actions or the like, are excluded from the interview recordation procedures below. Where the substance of an interview is completely recorded in an Examiners Amendment, no separate Interview Summary Record is required.

The Interview Summary Form shall be given an appropriate Paper No., placed in the right hand portion of the file, and listed on the "Contents" section of the file wrapper. In a personal interview, a duplicate of the Form is given to the applicant (or attorney or agent) at the conclusion of the interview. In the case of a telephone or video-conference interview, the copy is mailed to the applicant's correspondence address either with or prior to the next official communication. If additional correspondence from the examiner is not likely before an allowance or if other circumstances dictate, the Form should be mailed promptly after the interview rather than with the next official communication.

The Form provides for recordation of the following information:
- Application Number (Series Code and Serial Number)
- Name of applicant
- Name of examiner
- Date of interview
- Type of interview (telephonic, video-conference, or personal)
- Name of participant(s) (applicant, attorney or agent, examiner, other PTO personnel, etc.)
- An indication whether or not an exhibit was shown or a demonstration conducted
- An identification of the specific prior art discussed
- An indication whether an agreement was reached and if so, a description of the general nature of the agreement (may be by attachment of a copy of amendments or claims agreed as being allowable). Note: Agreement as to allowability is tentative and does not restrict further action by the examiner to the contrary.
- The signature of the examiner who conducted the interview (if Form is not an attachment to a signed Office action)

It is desirable that the examiner orally remind the applicant of his or her obligation to record the substance of the interview of each case. It should be noted, however, that the Interview Summary Form will not normally be considered a complete and proper recordation of the interview unless it includes, or is supplemented by the applicant or the examiner to include, all of the applicable items required below concerning the substance of the interview.

A complete and proper recordation of the substance of any interview should include at least the following applicable items:
1) A brief description of the nature of any exhibit shown or any demonstration conducted,
2) an identification of the claims discussed,
3) an identification of the specific prior art discussed,
4) an identification of the principal proposed amendments of a substantive nature discussed, unless these are already described on the Interview Summary Form completed by the Examiner,
5) a brief identification of the general thrust of the principal arguments presented to the examiner,
   (The identification of arguments need not be lengthy or elaborate. A verbatim or highly detailed description of the arguments is not required. The identification of the arguments is sufficient if the general nature or thrust of the principal arguments made to the examiner can be understood in the context of the application file. Of course, the applicant may desire to emphasize and fully describe those arguments which he or she feels were or might be persuasive to the examiner.)
6) a general indication of any other pertinent matters discussed, and
7) if appropriate, the general results or outcome of the interview unless already described in the Interview Summary Form completed by the examiner.

Examiners are expected to carefully review the applicant's record of the substance of an interview. If the record is not complete and accurate, the examiner will give the applicant an extendable one month time period to correct the record.

Examiner to Check for Accuracy

If the claims are allowable for other reasons of record, the examiner should send a letter setting forth the examiner's version of the statement attributed to him or her. If the record is complete and accurate, the examiner should place the indication, "Interview Record OK" on the paper recording the substance of the interview along with the date and the examiner's initials.

OPAP AKIMA-11 AUG 09 2016 PATENT & TRADEMARK OFFICE

I hereby certify that this correspondence is being transmitted by facsimile to Examiner Andrew Joseph Rudy of the United States Patent Office, at (571) 273-2885. Date and Signature of transmittal: 8/9/16 [signature]

IN THE UNITED STATES PATENT AND TRADEMARK OFFICE

Applicant: Pienkos, John T.

Serial No.: 14/120,873

Filing Date: July 7, 2014

Title: APPARATUS AND METHOD FOR PROVIDING PRODUCT LOCATION INFORMATION TO CUSTOMERS IN A STORE

Examiner: Rudy, Andrew J.

Art Unit: 3687

STATEMENT OF SUBSTANCE OF INTERVIEW

Commissioner for Patents
P.O. Box 1450
Alexandria, VA 22313-1450

Dear Sir:

In response to the Applicant-Initiated Interview Summary dated July 14, 2016, the Applicant is providing this Statement of Substance of Interview.

The Applicant substantially agrees with the Substance of Interview statement provided with the Applicant-Initiated Interview Summary dated July 14, 2016, according to which a PTO 892 form (Notice of References Cited form) was discussed. The Applicant pointed out to the Examiner that, in a Notice of References Cited dated June 23, 2016, which appeared to list references considered during the prosecution of patent applications to which the present Application claims priority, one reference apparently was inadvertently missing. The Examiner agreed and, in a subsequent mailing dated July 1, 2016, the Examiner provided an additional Notice of References Cited listing the previously-missing reference. It is the Applicant's understanding that all of the references cited in these two Notices of References Cited have been considered by the Examiner in connection with the present Application.

PAGE 2/3 * RCVD AT 8/9/2016 11:54:20 PM [Eastern Daylight Time] * SVR:W-PTOFAX-001/25 * DNIS:2732885 * CSID:2626434165 * DURATION (mm-ss):01-31

Home Depot
Ex. 1003 - Page 158

The Applicant is uncertain of the date on which the above-referenced discussion occurred but, based upon the aforementioned July 1, 2016 mailing date, the Applicant believes that the above-referenced discussion occurred prior to the July 7, 2016 date mentioned in the Substance of Interview, and probably occurred on or around June 28, 2016. Although the Applicant does not specifically recall any discussion of any substantial nature occurring subsequent to June 28, 2016, to the extent that any discussion involving the Examiner and the Applicant occurred after that date or after the mailing date of the July 1, 2016 Notice of References Cited, it is believed by the Applicant that such discussion would have involved the Applicant thanking the Examiner for correcting the record by way of the July 1, 2016 Notice of References Cited.

The Applicant believes that no fees are due in connection with this submission. Issuance of the present Application, which stands allowed, is earnestly requested. If any fee(s) are deemed required by the Patent Office in connection with the prosecution and issuance of the present Application, the Applicant hereby authorizes such additional fees to be charged to the same credit card to which the issue fee for the present Application was charged. Also, any further petition deemed required should be considered provisionally made.

The Applicant invites the Examiner to telephone the Applicant at the telephone number listed below if discussion with the Applicant would further the prosecution of the present Application, or otherwise be of assistance to the Examiner.

Respectfully,

John T. Pienkos
Applicant

Dated: 8/9/16

10019 N. Miller Ct.
Mequon, WI 53092
(262) 643-4165

PAGE 3/3 * RCVD AT 8/9/2016 11:54:20 PM [Eastern Daylight Time] * SVR:W-PTOFAX-001/25 * DNIS:2732885 * CSID:2626434165 * DURATION (mm-ss):01-31
Home Depot
Ex. 1003 - Page 159

OPAP
AUG 09 2016
PATENT & TRADEMARK OFFICE

TO: Examiner Andrew J. Rudy

Fax: (571) 273-2885

FROM: John Pienkos

Applicant, U.S. Patent Application No. 14/120,873

Fax: (262) 643-4165

RE: Statement of Substance of Interview

DATE: 8/9/2016

3 Pages Counting Cover Sheet

Home Depot
Ex. 1003 - Page 160

RECEIVED
CENTRAL FAX CENTER

AUG 11 2016

I hereby certify that this correspondence is being transmitted by facsimile to Examiner Andrew Joseph Rudy of the United States Patent Office, at (571) 273-8300. Date and Signature of transmittal: 8/11/16

IN THE UNITED STATES PATENT AND TRADEMARK OFFICE

Applicant: Pienkos, John T.

Serial No.: 14/120,873

Filing Date: July 7, 2014

Title: APPARATUS AND METHOD FOR PROVIDING PRODUCT LOCATION INFORMATION TO CUSTOMERS IN A STORE

Examiner: Rudy, Andrew J.

Art Unit: 3687

STATEMENT OF SUBSTANCE OF INTERVIEW

Commissioner for Patents
P.O. Box 1450
Alexandria, VA 22313-1450

Dear Sir:

In response to the Applicant-Initiated Interview Summary dated July 14, 2016, the Applicant is providing this Statement of Substance of Interview.

The Applicant substantially agrees with the Substance of Interview statement provided with the Applicant-Initiated Interview Summary dated July 14, 2016, according to which a PTO 892 form (Notice of References Cited form) was discussed. The Applicant pointed out to the Examiner that, in a Notice of References Cited dated June 23, 2016, which appeared to list references considered during the prosecution of patent applications to which the present Application claims priority, one reference apparently was inadvertently missing. The Examiner agreed and, in a subsequent mailing dated July 1, 2016, the Examiner provided an additional Notice of References Cited listing the previously-missing reference. It is the Applicant's understanding that all of the references cited in these two Notices of References Cited have been considered by the Examiner in connection with the present Application.

PAGE 2/3 * RCVD AT 8/11/2016 11:27:31 PM [Eastern Daylight Time] * SVR:W-PTOFAX-001/21 * DNIS:2738300 * CSID:2626434165 * DURATION (mm-ss):01-36

Home Depot
Ex. 1003 - Page 161

The Applicant is uncertain of the date on which the above-referenced discussion occurred but, based upon the aforementioned July 1, 2016 mailing date, the Applicant believes that the above-referenced discussion occurred prior to the July 7, 2016 date mentioned in the Substance of Interview, and probably occurred on or around June 28, 2016. Although the Applicant does not specifically recall any discussion of any substantial nature occurring subsequent to June 28, 2016, to the extent that any discussion involving the Examiner and the Applicant occurred after that date or after the mailing date of the July 1, 2016 Notice of References Cited, it is believed by the Applicant that such discussion would have involved the Applicant thanking the Examiner for correcting the record by way of the July 1, 2016 Notice of References Cited.

The Applicant believes that no fees are due in connection with this submission. Issuance of the present Application, which stands allowed, is earnestly requested. If any fee(s) are deemed required by the Patent Office in connection with the prosecution and issuance of the present Application, the Applicant hereby authorizes such additional fees to be charged to the same credit card to which the issue fee for the present Application was charged. Also, any further petition deemed required should be considered provisionally made.

The Applicant invites the Examiner to telephone the Applicant at the telephone number listed below if discussion with the Applicant would further the prosecution of the present Application, or otherwise be of assistance to the Examiner.

Respectfully,

John T. Pienkos
Applicant

Dated: 8/11/16

10019 N. Miller Ct.
Mequon, WI 53092
(262) 643-4165

PAGE 3/3 * RCVD AT 8/11/2016 11:27:31 PM [Eastern Daylight Time] * SVR:W-PTOFAX-001/21 * DNIS:2738300 * CSID:2626434165 * DURATION (mm-ss):01-36

RECEIVED
CENTRAL FAX CENTER
AUG 11 2016

TO: Examiner Andrew J. Rudy

Fax: (571) 273-
8300

FROM: John Pienkos

Applicant, U.S. Patent Application No. 14/120,873

Fax: (262) 643-4165

RE: Statement of Substance of Interview

DATE: August 11, 2016

3 Pages Counting Cover Sheet

Note: Per suggestion of USPTO Inventor's Assistance Center, this is being resubmitted to Fax # (571) 273-8300.

Home Depot

UNITED STATES PATENT AND TRADEMARK OFFICE

UNITED STATES DEPARTMENT OF COMMERCE
United States Patent and Trademark Office
Address: COMMISSIONER FOR PATENTS
P.O. Box 1450
Alexandria, Virginia 22313-1450
www.uspto.gov

APPLICATION NO.	ISSUE DATE	PATENT NO.	ATTORNEY DOCKET NO.	CONFIRMATION NO.
14/120,873	11/08/2016	9489690		2619

7590 10/19/2016

JOHN T. PIENKOS
10019 N. MILLER CT.
MEQUON, WI 53092

ISSUE NOTIFICATION

The projected patent number and issue date are specified above.

Determination of Patent Term Adjustment under 35 U.S.C. 154 (b)
(application filed on or after May 29, 2000)

The Patent Term Adjustment is 0 day(s). Any patent to issue from the above-identified application will include an indication of the adjustment on the front page.

If a Continued Prosecution Application (CPA) was filed in the above-identified application, the filing date that determines Patent Term Adjustment is the filing date of the most recent CPA.

Applicant will be able to obtain more detailed information by accessing the Patent Application Information Retrieval (PAIR) WEB site (http://pair.uspto.gov).

Any questions regarding the Patent Term Extension or Adjustment determination should be directed to the Office of Patent Legal Administration at (571)-272-7702. Questions relating to issue and publication fee payments should be directed to the Application Assistance Unit (AAU) of the Office of Data Management (ODM) at (571)-272-4200.

APPLICANT(s) (Please see PAIR WEB site http://pair.uspto.gov for additional applicants):

John T. Pienkos, Mequon, WI;

The United States represents the largest, most dynamic marketplace in the world and is an unparalleled location for business investment, innovation, and commercialization of new technologies. The USA offers tremendous resources and advantages for those who invest and manufacture goods here. Through SelectUSA, our nation works to encourage and facilitate business investment. To learn more about why the USA is the best country in the world to develop technology, manufacture products, and grow your business, visit SelectUSA.gov.

UNITED STATES PATENT AND TRADEMARK OFFICE

UNITED STATES DEPARTMENT OF COMMERCE
United States Patent and Trademark Office
Address: COMMISSIONER FOR PATENTS
P.O. Box 1450
Alexandria, Virginia 22313-1450
www.uspto.gov

APPLICATION NO.	FILING DATE	FIRST NAMED INVENTOR	ATTORNEY DOCKET NO.	CONFIRMATION NO.
14/120,873	07/07/2014	John T. Pienkos		2619

7590 10/21/2016

JOHN T. PIENKOS
10019 N. MILLER CT.
MEQUON, WI 53092

EXAMINER
RUDY, ANDREW J

ART UNIT	PAPER NUMBER
3687	

MAIL DATE	DELIVERY MODE
10/21/2016	PAPER

Please find below and/or attached an Office communication concerning this application or proceeding.

The time period for reply, if any, is set in the attached communication.

Applicant-Initiated Interview Summary	Application No.	Applicant(s)	
	14/120,873	PIENKOS, JOHN T.	
	Examiner	Art Unit	
	ANDREW JOSEPH RUDY	3687	

All participants (applicant, applicant's representative, PTO personnel):

(1) *ANDREW JOSEPH RUDY*. (3)_____.

(2) *John Pienkos*. (4)_____.

Date of Interview: *06 October 2016*.

Type: ☒ Telephonic ☐ Video Conference
☐ Personal [copy given to: ☐ applicant ☐ applicant's representative]

Exhibit shown or demonstration conducted: ☐ Yes ☒ No.
If Yes, brief description: _____.

Issues Discussed ☐101 ☐112 ☐102 ☐103 ☒Others
(For each of the checked box(es) above, please describe below the issue and detailed description of the discussion)

Claim(s) discussed: *none*.

Identification of prior art discussed: *none*.

Substance of Interview
(For each issue discussed, provide a detailed description and indicate if agreement was reached. Some topics may include: identification or clarification of a reference or a portion thereof, claim interpretation, proposed amendments, arguments of any applied references etc...)

The status of the application. Mr. Pienkos was informed that I would investigate such and inform him of the status. After numerous inquiries by me, Mr. Pienkos was notifed on October 17, 2016 the Application should be ready to issue.

Applicant recordation instructions: The formal written reply to the last Office action must include the substance of the interview. (See MPEP section 713.04). If a reply to the last Office action has already been filed, applicant is given a non-extendable period of the longer of one month or thirty days from this interview date, or the mailing date of this interview summary form, whichever is later, to file a statement of the substance of the interview

Examiner recordation instructions: Examiners must summarize the substance of any interview of record. A complete and proper recordation of the substance of an interview should include the items listed in MPEP 713.04 for complete and proper recordation including the identification of the general thrust of each argument or issue discussed, a general indication of any other pertinent matters discussed regarding patentability and the general results or outcome of the interview, to include an indication as to whether or not agreement was reached on the issues raised.

☐ Attachment

/ANDREW JOSEPH RUDY/
Primary Examiner, Art Unit 3687

Summary of Record of Interview Requirements

Manual of Patent Examining Procedure (MPEP), Section 713.04, Substance of Interview Must be Made of Record
A complete written statement as to the substance of any face-to-face, video conference, or telephone interview with regard to an application must be made of record in the application whether or not an agreement with the examiner was reached at the interview.

Title 37 Code of Federal Regulations (CFR) § 1.133 Interviews
Paragraph (b)

In every instance where reconsideration is requested in view of an interview with an examiner, a complete written statement of the reasons presented at the interview as warranting favorable action must be filed by the applicant. An interview does not remove the necessity for reply to Office action as specified in §§ 1.111, 1.135. (35 U.S.C. 132)

37 CFR §1.2 Business to be transacted in writing.
All business with the Patent or Trademark Office should be transacted in writing. The personal attendance of applicants or their attorneys or agents at the Patent and Trademark Office is unnecessary. The action of the Patent and Trademark Office will be based exclusively on the written record in the Office. No attention will be paid to any alleged oral promise, stipulation, or understanding in relation to which there is disagreement or doubt.

The action of the Patent and Trademark Office cannot be based exclusively on the written record in the Office if that record is itself incomplete through the failure to record the substance of interviews.

It is the responsibility of the applicant or the attorney or agent to make the substance of an interview of record in the application file, unless the examiner indicates he or she will do so. It is the examiner's responsibility to see that such a record is made and to correct material inaccuracies which bear directly on the question of patentability.

Examiners must complete an Interview Summary Form for each interview held where a matter of substance has been discussed during the interview by checking the appropriate boxes and filling in the blanks. Discussions regarding only procedural matters, directed solely to restriction requirements for which interview recordation is otherwise provided for in Section 812.01 of the Manual of Patent Examining Procedure, or pointing out typographical errors or unreadable script in Office actions or the like, are excluded from the interview recordation procedures below. Where the substance of an interview is completely recorded in an Examiners Amendment, no separate Interview Summary Record is required.

The Interview Summary Form shall be given an appropriate Paper No., placed in the right hand portion of the file, and listed on the "Contents" section of the file wrapper. In a personal interview, a duplicate of the Form is given to the applicant (or attorney or agent) at the conclusion of the interview. In the case of a telephone or video-conference interview, the copy is mailed to the applicant's correspondence address either with or prior to the next official communication. If additional correspondence from the examiner is not likely before an allowance or if other circumstances dictate, the Form should be mailed promptly after the interview rather than with the next official communication.

The Form provides for recordation of the following information:
- Application Number (Series Code and Serial Number)
- Name of applicant
- Name of examiner
- Date of interview
- Type of interview (telephonic, video-conference, or personal)
- Name of participant(s) (applicant, attorney or agent, examiner, other PTO personnel, etc.)
- An indication whether or not an exhibit was shown or a demonstration conducted
- An identification of the specific prior art discussed
- An indication whether an agreement was reached and if so, a description of the general nature of the agreement (may be by attachment of a copy of amendments or claims agreed as being allowable). Note: Agreement as to allowability is tentative and does not restrict further action by the examiner to the contrary.
- The signature of the examiner who conducted the interview (if Form is not an attachment to a signed Office action)

It is desirable that the examiner orally remind the applicant of his or her obligation to record the substance of the interview of each case. It should be noted, however, that the Interview Summary Form will not normally be considered a complete and proper recordation of the interview unless it includes, or is supplemented by the applicant or the examiner to include, all of the applicable items required below concerning the substance of the interview.

A complete and proper recordation of the substance of any interview should include at least the following applicable items:
1) A brief description of the nature of any exhibit shown or any demonstration conducted,
2) an identification of the claims discussed,
3) an identification of the specific prior art discussed,
4) an identification of the principal proposed amendments of a substantive nature discussed, unless these are already described on the Interview Summary Form completed by the Examiner,
5) a brief identification of the general thrust of the principal arguments presented to the examiner,
   (The identification of arguments need not be lengthy or elaborate. A verbatim or highly detailed description of the arguments is not required. The identification of the arguments is sufficient if the general nature or thrust of the principal arguments made to the examiner can be understood in the context of the application file. Of course, the applicant may desire to emphasize and fully describe those arguments which he or she feels were or might be persuasive to the examiner.)
6) a general indication of any other pertinent matters discussed, and
7) if appropriate, the general results or outcome of the interview unless already described in the Interview Summary Form completed by the examiner.

Examiners are expected to carefully review the applicant's record of the substance of an interview. If the record is not complete and accurate, the examiner will give the applicant an extendable one month time period to correct the record.

Examiner to Check for Accuracy

If the claims are allowable for other reasons of record, the examiner should send a letter setting forth the examiner's version of the statement attributed to him or her. If the record is complete and accurate, the examiner should place the indication, "Interview Record OK" on the paper recording the substance of the interview along with the date and the examiner's initials.

Applicant-Initiated Interview Summary	Application No.	Applicant(s)	
	14/120,873	PIENKOS, JOHN T.	
	Examiner	Art Unit	
	ANDREW JOSEPH RUDY	3687	

All participants (applicant, applicant's representative, PTO personnel):

(1) *ANDREW JOSEPH RUDY*. (3)_____.

(2) *John Pienkos*. (4)_____.

Date of Interview: *06 October 2016*.

Type: ☒ Telephonic ☐ Video Conference
☐ Personal [copy given to: ☐ applicant ☐ applicant's representative]

Exhibit shown or demonstration conducted: ☐ Yes ☒ No.
If Yes, brief description: _____.

Issues Discussed ☐101 ☐112 ☐102 ☐103 ☒Others
(For each of the checked box(es) above, please describe below the issue and detailed description of the discussion)

Claim(s) discussed: *none*.

Identification of prior art discussed: *none*.

Substance of Interview
(For each issue discussed, provide a detailed description and indicate if agreement was reached. Some topics may include: identification or clarification of a reference or a portion thereof, claim interpretation, proposed amendments, arguments of any applied references etc...)

The status of the application. Mr. Pienkos was informed that I would investigate such and inform him of the status. After numerous inquiries by me, Mr. Pienkos was notifed on October 17, 2016 the Application should be ready to issue.

Applicant recordation instructions: The formal written reply to the last Office action must include the substance of the interview. (See MPEP section 713.04). If a reply to the last Office action has already been filed, applicant is given a non-extendable period of the longer of one month or thirty days from this interview date, or the mailing date of this interview summary form, whichever is later, to file a statement of the substance of the interview

Examiner recordation instructions: Examiners must summarize the substance of any interview of record. A complete and proper recordation of the substance of an interview should include the items listed in MPEP 713.04 for complete and proper recordation including the identification of the general thrust of each argument or issue discussed, a general indication of any other pertinent matters discussed regarding patentability and the general results or outcome of the interview, to include an indication as to whether or not agreement was reached on the issues raised.

☐ Attachment

/ANDREW JOSEPH RUDY/
Primary Examiner, Art Unit 3687

Summary of Record of Interview Requirements

Manual of Patent Examining Procedure (MPEP), Section 713.04, Substance of Interview Must be Made of Record
A complete written statement as to the substance of any face-to-face, video conference, or telephone interview with regard to an application must be made of record in the application whether or not an agreement with the examiner was reached at the interview.

Title 37 Code of Federal Regulations (CFR) § 1.133 Interviews
Paragraph (b)

In every instance where reconsideration is requested in view of an interview with an examiner, a complete written statement of the reasons presented at the interview as warranting favorable action must be filed by the applicant. An interview does not remove the necessity for reply to Office action as specified in §§ 1.111, 1.135. (35 U.S.C. 132)

37 CFR §1.2 Business to be transacted in writing.
All business with the Patent or Trademark Office should be transacted in writing. The personal attendance of applicants or their attorneys or agents at the Patent and Trademark Office is unnecessary. The action of the Patent and Trademark Office will be based exclusively on the written record in the Office. No attention will be paid to any alleged oral promise, stipulation, or understanding in relation to which there is disagreement or doubt.

The action of the Patent and Trademark Office cannot be based exclusively on the written record in the Office if that record is itself incomplete through the failure to record the substance of interviews.

It is the responsibility of the applicant or the attorney or agent to make the substance of an interview of record in the application file, unless the examiner indicates he or she will do so. It is the examiner's responsibility to see that such a record is made and to correct material inaccuracies which bear directly on the question of patentability.

Examiners must complete an Interview Summary Form for each interview held where a matter of substance has been discussed during the interview by checking the appropriate boxes and filling in the blanks. Discussions regarding only procedural matters, directed solely to restriction requirements for which interview recordation is otherwise provided for in Section 812.01 of the Manual of Patent Examining Procedure, or pointing out typographical errors or unreadable script in Office actions or the like, are excluded from the interview recordation procedures below. Where the substance of an interview is completely recorded in an Examiners Amendment, no separate Interview Summary Record is required.

The Interview Summary Form shall be given an appropriate Paper No., placed in the right hand portion of the file, and listed on the "Contents" section of the file wrapper. In a personal interview, a duplicate of the Form is given to the applicant (or attorney or agent) at the conclusion of the interview. In the case of a telephone or video-conference interview, the copy is mailed to the applicant's correspondence address either with or prior to the next official communication. If additional correspondence from the examiner is not likely before an allowance or if other circumstances dictate, the Form should be mailed promptly after the interview rather than with the next official communication.

The Form provides for recordation of the following information:
- Application Number (Series Code and Serial Number)
- Name of applicant
- Name of examiner
- Date of interview
- Type of interview (telephonic, video-conference, or personal)
- Name of participant(s) (applicant, attorney or agent, examiner, other PTO personnel, etc.)
- An indication whether or not an exhibit was shown or a demonstration conducted
- An identification of the specific prior art discussed
- An indication whether an agreement was reached and if so, a description of the general nature of the agreement (may be by attachment of a copy of amendments or claims agreed as being allowable). Note: Agreement as to allowability is tentative and does not restrict further action by the examiner to the contrary.
- The signature of the examiner who conducted the interview (if Form is not an attachment to a signed Office action)

It is desirable that the examiner orally remind the applicant of his or her obligation to record the substance of the interview of each case. It should be noted, however, that the Interview Summary Form will not normally be considered a complete and proper recordation of the interview unless it includes, or is supplemented by the applicant or the examiner to include, all of the applicable items required below concerning the substance of the interview.

A complete and proper recordation of the substance of any interview should include at least the following applicable items:
1) A brief description of the nature of any exhibit shown or any demonstration conducted,
2) an identification of the claims discussed,
3) an identification of the specific prior art discussed,
4) an identification of the principal proposed amendments of a substantive nature discussed, unless these are already described on the Interview Summary Form completed by the Examiner,
5) a brief identification of the general thrust of the principal arguments presented to the examiner,
   (The identification of arguments need not be lengthy or elaborate. A verbatim or highly detailed description of the arguments is not required. The identification of the arguments is sufficient if the general nature or thrust of the principal arguments made to the examiner can be understood in the context of the application file. Of course, the applicant may desire to emphasize and fully describe those arguments which he or she feels were or might be persuasive to the examiner.)
6) a general indication of any other pertinent matters discussed, and
7) if appropriate, the general results or outcome of the interview unless already described in the Interview Summary Form completed by the examiner.

Examiners are expected to carefully review the applicant's record of the substance of an interview. If the record is not complete and accurate, the examiner will give the applicant an extendable one month time period to correct the record.

Examiner to Check for Accuracy

If the claims are allowable for other reasons of record, the examiner should send a letter setting forth the examiner's version of the statement attributed to him or her. If the record is complete and accurate, the examiner should place the indication, "Interview Record OK" on the paper recording the substance of the interview along with the date and the examiner's initials.

RECEIVED
CENTRAL FAX CENTER

OCT 3 1 2016

I hereby certify that this correspondence is being transmitted by facsimile to Examiner Andrew Joseph Rudy of the United States Patent Office, at (571) 273-8300. Date and Signature of transmittal: 10/31/16

IN THE UNITED STATES PATENT AND TRADEMARK OFFICE

Applicant: Pienkos, John T.

Serial No.: 14/120,873

Filing Date: July 7, 2014

Title: APPARATUS AND METHOD FOR PROVIDING PRODUCT LOCATION INFORMATION TO CUSTOMERS IN A STORE

Examiner: Rudy, Andrew J.

Art Unit: 3687

STATEMENT OF SUBSTANCE OF INTERVIEW

Commissioner for Patents
P.O. Box 1450
Alexandria, VA 22313-1450

Dear Sir:

In response to the Applicant-Initiated Interview Summary dated October 21, 2016, the Applicant is providing this Statement of Substance of Interview.

The Applicant substantially agrees with the Substance of Interview statement provided with the Applicant-Initiated Interview Summary dated October 21, 2016. The Applicant contacted the Patent Examiner to inquire about the status of the present Application, due to an apparent delay in the processing of the Application subsequent to payment of the issue fee. The Applicant appreciates the Examiner's assistance in investigating the status of the Application and for communicating the results of his investigation to the Applicant.

The Applicant believes that no fees are due in connection with this submission. Issuance of the present Application, which stands allowed, is earnestly requested. If any fee(s) are deemed required by the Patent Office in connection with the prosecution and issuance of the present Application, the Applicant hereby authorizes such additional fees to be charged to the

PAGE 2/3 * RCVD AT 10/31/2016 10:46:08 PM [Eastern Daylight Time] * SVR:W-PTOFAX-002/32 * DNIS:2738300 * CSID:2626434165 * DURATION (mm-ss):01-12
Home Depot
Ex. 1003 - Page 170

same credit card to which the issue fee for the present Application was charged. Also, any further petition deemed required should be considered provisionally made.

The Applicant invites the Examiner to telephone the Applicant at the telephone number listed below if discussion with the Applicant would further the prosecution of the present Application, or otherwise be of assistance to the Examiner.

Respectfully,

John T. Pienkos
Applicant

Dated: 10/31/16

10019 N. Miller Ct.
Mequon, WI 53092
(262) 643-4165

PAGE 3/3 * RCVD AT 10/31/2016 10:46:08 PM [Eastern Daylight Time] * SVR:W-PTOFAX-002/32 * DNIS:2738300 * CSID:2626434165 * DURATION (mm-ss):06-12

Home Depot
Ex. 1003 - Page 171

RECEIVED
CENTRAL FAX CENTER

OCT 3 1 2016

TO: Examiner Andrew J. Rudy

Fax: (571) 273-
8300

FROM: John Pienkos

Applicant, U.S. Patent Application No. 14/120,873

Fax: (262) 643-4165

RE: Statement of Substance of Interview

DATE: 10/31/**2016**

3 Pages Counting Cover Sheet

AO 120 (Rev. 08/10)

TO: Mail Stop 8 Director of the U.S. Patent and Trademark Office P.O. Box 1450 Alexandria, VA 22313-1450	REPORT ON THE FILING OR DETERMINATION OF AN ACTION REGARDING A PATENT OR TRADEMARK

In Compliance with 35 U.S.C. § 290 and/or 15 U.S.C. § 1116 you are hereby advised that a court action has been filed in the U.S. District Court Eastern District of Wisconsin on the following

☐ Trademarks or ☑ Patents. (☐ the patent action involves 35 U.S.C. § 292.):

DOCKET NO.	DATE FILED	U.S. DISTRICT COURT
21-CV-789	6/25/2021	Eastern District of Wisconsin

PLAINTIFF	DEFENDANT
Innovaport LLC	IKEA North America Services LLC IKEA Trading Services Inc

	PATENT OR TRADEMARK NO.	DATE OF PATENT OR TRADEMARK	HOLDER OF PATENT OR TRADEMARK
1	8,775,260	7/8/2014	Innovaport LLC
2	8,787,933	7/22/2014	Innovaport LLC
3	9,990,670	6/5/2018	Innovaport LLC
4	9,489,690	11/8/2016	Innovaport LLC
5			

In the above—entitled case, the following patent(s)/ trademark(s) have been included:

DATE INCLUDED	INCLUDED BY ☐ Amendment ☐ Answer ☐ Cross Bill ☐ Other Pleading	
PATENT OR TRADEMARK NO.	DATE OF PATENT OR TRADEMARK	HOLDER OF PATENT OR TRADEMARK
1		
2		
3		
4		
5		

In the above—entitled case, the following decision has been rendered or judgement issued:

DECISION/JUDGEMENT

CLERK	(BY) DEPUTY CLERK	DATE
Gina Colletti	Ross Miller	6/29/2021

Copy 1—Upon initiation of action, mail this copy to Director Copy 3—Upon termination of action, mail this copy to Director
Copy 2—Upon filing document adding patent(s), mail this copy to Director Copy 4—Case file copy

Home Depot
Ex. 1003 - Page 173

AO 120 (Rev. 08/10)

TO: Mail Stop 8 Director of the U.S. Patent and Trademark Office P.O. Box 1450 Alexandria, VA 22313-1450	REPORT ON THE FILING OR DETERMINATION OF AN ACTION REGARDING A PATENT OR TRADEMARK

In Compliance with 35 U.S.C. § 290 and/or 15 U.S.C. § 1116 you are hereby advised that a court action has been filed in the U.S. District Court Western District of Wisconsin on the following

☐ Trademarks or ☑ Patents. (☐ the patent action involves 35 U.S.C. § 292.):

DOCKET NO.	DATE FILED	U.S. DISTRICT COURT
22-cv-425	8/5/2022	Western District of Wisconsin

PLAINTIFF	DEFENDANT
Innovaport LLC	Target Corporation

PATENT OR TRADEMARK NO.	DATE OF PATENT OR TRADEMARK	HOLDER OF PATENT OR TRADEMARK
1 8,775,260	7/8/2014	Innovaport LLC
2 8,787,933	7/22/2014	Innovaport LLC
3 9,489,690	11/8/2016	Innovaport LLC
4 9,990,670	6/5/2018	Innovaport LLC
5		

In the above---entitled case, the following patent(s)/ trademark(s) have been included:

DATE INCLUDED	INCLUDED BY ☐ Amendment ☐ Answer ☐ Cross Bill ☐ Other Pleading	
PATENT OR TRADEMARK NO.	DATE OF PATENT OR TRADEMARK	HOLDER OF PATENT OR TRADEMARK
1		
2		
3		
4		
5		

In the above---entitled case, the following decision has been rendered or judgement issued:

DECISION/JUDGEMENT

CLERK	(BY) DEPUTY CLERK	DATE
Joel Turner, Clerk of Court	s/L. Kamke, Deputy Clerk	8/5/2022

Copy 1---Upon initiation of action, mail this copy to Director Copy 3---Upon termination of action, mail this copy to Director
Copy 2---Upon filing document adding patent(s), mail this copy to Director Copy 4---Case file copy