Trials@uspto.gov
571.272.7822

Paper 24
Date: June 16, 2020

UNITED STATES PATENT AND TRADEMARK OFFICE

BEFORE THE PATENT TRIAL AND APPEAL BOARD

SAND REVOLUTION II, LLC,
Petitioner,

v.

CONTINENTAL INTERMODAL GROUP – TRUCKING LLC,
Patent Owner.

IPR2019-01393
Patent 8,944,740 B2

Before SCOTT C. WEIDENFELLER, *Vice Chief Administrative Patent Judge*, SCOTT C. MOORE, and RYAN H. FLAX, *Administrative Patent Judges*.

FLAX, *Administrative Patent Judge*.

DECISION
Granting Request For Rehearing
and Instituting *Inter Partes* Review
35 U.S.C. § 314; 37 C.F.R. § 42.71(d)

I. INTRODUCTION

A. *STATUS OF THE PROCEEDING*

Sand Revolution II, LLC ("Petitioner") filed a Petition for an *inter partes* review of claims 1, 2, 4, 6–14, and 16–20 of U.S. Patent 8,944,740 B2 ("the '740 patent," Ex. 1001). Paper 7 ("Pet."). Continental Intermodal Group-Trucking LLC ("Patent Owner") timely filed a Preliminary Response. Paper 8 ("Prelim. Resp.").

In a divided decision, the Board denied institution pursuant to 35 U.S.C. § 314(a), reasoning that this case, as evidenced by the preliminary record, was controlled by the Board's precedential decision in *NHK Spring Co., Ltd. v. Intri-Plex Techs., Inc.*, IPR2018-00752, Paper 8 (PTAB Sept. 12, 2018) (precedential). Paper 12 ("Denial Decision").

Petitioner filed a Request for Rehearing of the Denial Decision. Paper 15 ("Req. Reh'g" or "Request for Rehearing"). Concurrently therewith, Petitioner requested that the Board's Precedential Opinion Panel ("POP") reconsider the Denial Decision. Paper 17; Ex. 3002 ("POP Request"). The POP declined to review the issue raised in Petitioner's POP Request. Paper 18. Thus, we proceed to the rehearing. Before rendering a decision, we determined that further briefing was warranted on the application of *NHK* to the evolving facts of this case and authorized supplemental briefing by the parties. Paper 19. Each of the parties filed such supplemental briefing. Papers 20, 22.

As discussed further below, we conclude that, in light of new evidence of record submitted by the parties with the aforementioned supplemental briefing, the circumstances of this proceeding are distinguishable from those in *NHK* and that the application of discretion to

Samsung Exhibit 1012, Page 2 of 58
Samsung Electronics Co., Ltd. v. WIPQTUS, INC.
IPR2024-00023

deny under 35 U.S.C. § 314(a) is not warranted when we apply the factors set forth in *Apple Inc. v. Fintiv, Inc.*, IPR2020-00019, Paper 11 (March 20, 2020) (precedential) ("*Fintiv*"). We, therefore, grant Petitioner's Request for Rehearing.

Under 37 C.F.R. § 42.4(a), we have authority to determine whether to institute an *inter partes* review. We may institute an *inter partes* review if the information presented in the petition filed under 35 U.S.C. § 311, and any response filed under § 313, shows that there is a reasonable likelihood that Petitioner would prevail with respect to at least one of the claims challenged in the petition. 35 U.S.C. § 314. After reviewing the parties' submissions, we conclude that on the preliminary record Petitioner demonstrates a reasonable likelihood that it would prevail in showing that certain claims of the '740 patent are unpatentable under at least one ground. Therefore, we institute *inter partes* review of all challenged claims (1, 2, 4, 6–14, and 16–20) on Grounds 1 and 2 raised in the Petition, pursuant to 35 U.S.C. § 314. *See SAS Inst., Inc. v. Iancu*, 138 S. Ct. 1348, 1359–60 (2018).

B. Real Parties-in-Interest

Petitioner identifies itself, "Sand Revolution II, LLC," and also "Sand Revolution LLC," as real parties-in-interest. Pet. 87. Patent Owner identifies itself, "Continental Intermodal Group – Trucking LLC," as the real party-in-interest. Paper 6, 1.

C. Related Matters

Petitioner states "[t]he '740 patent is at issue in *Continental Intermodal Group – Trucking LLC v. Sand Revolution LLC*, No. 7:18-cv-00147-ADA (W.D. Tex. Aug. 21, 2018)." Pet. 87. Patent Owner also notes

Samsung Exhibit 1012, Page 3 of 58
Samsung Electronics Co., Ltd. v. WIPQTUS, INC.
IPR2024-00023

that this same case is a related matter pursuant to 37 C.F.R. § 42.8(b)(2). Paper 6, 1. We refer to this matter as the "related district court litigation."

II. REQUEST FOR REHEARING AND BOARD'S DISCRETION TO DENY INSTITUTION UNDER 35 U.S.C. § 314(A)

A. STANDARD OF REVIEW

A party requesting rehearing of a Board decision has the burden to show that the decision should be modified. Pursuant to 37 C.F.R. § 42.71(d), the rehearing request must identify, specifically, all matters the party believes the Board misapprehended or overlooked and the place where each matter was previously addressed in a motion, an opposition, or a reply. When rehearing a decision on a petition, we review the decision for an abuse of discretion. 37 C.F.R. § 42.71(c) (2019). An abuse of discretion may arise if a decision is based on an erroneous interpretation of law, if a factual finding is not supported by substantial evidence, or if an unreasonable judgment is made in weighing relevant factors. *In re Gartside*, 203 F.3d 1305, 1315–16 (Fed. Cir. 2000).

We review Petitioner's Request for Rehearing in view of these standards of law and the evidence of record.

B. DISCUSSION ON REHEARING

In our Denial Decision, entered February 5, 2020, we held that *NHK* compelled the exercise of discretion under 35 U.S.C. § 314(a) because, upon comparing the facts of *NHK* to the circumstances of this proceeding, we found that, as in *NHK*, here: (1) the related district court litigation involves the same parties as this proceeding (*see* Pet. 87; Paper 6, 1; *see also supra* Section I.C); (2) the jury trial would begin before our final written decision would come due (Ex. 2004); (3) as in the district court, here Petitioner asserted that the claim language "integrated actuating system" and

Samsung Exhibit 1012, Page 4 of 58
Samsung Electronics Co., Ltd. v. WIPQTUS, INC.
IPR2024-00023

"reconfigurable" warranted express interpretation and this language was similarly interpreted in both proceedings (Ex. 2002, 14, 19, 20, 21; Ex. 2003; Ex. 2007; Ex. 1011; Pet. 10–12);[1] and (4) the grounds for unpatentability asserted here were also asserted for invalidity in the related district court litigation (*see* Ex. 2005; *compare* Pet. 12–86, *with* Ex. 2006 1–41).[2] Denial Decision 15–18.

In its Request for Rehearing, Petitioner asserts that the majority "denied institution under 35 U.S.C. § 314(a) based solely on the allegedly advanced stage of the parallel district court proceeding with one invalidity dispute similar to that in the instant IPR petition." Reh'g Req. 1. Petitioner asserts that the Denial Decision was premised on the mistake that the district court's schedule for its jury trial was certain, but such a schedule was actually merely tentative. *Id.* at 2. On this point, Petitioner argues that "a district court trial schedule is inherently unpredictable and the court will often 'extend or accelerate deadlines and modify case schedules for myriad reasons.'" *Id.* at 8 (citing *Precision Planting, LLC v. Deere & Co.*, IPR2019-01044, Paper 17 at 15 (PTAB Dec. 2, 2019)). Petitioner notes, without specific citation to evidence, that "after the [Denial] Decision, the jury trial in the parallel proceeding was delayed by another two months, until

---

[1] The district court concluded that the disputed claim language should be accorded its "plain and ordinary meaning," without substantive elaboration; however, we provided substantive reasoning for our construction of this language and illuminated how such a skilled artisan would understand such ordinary meanings, where the district court did not. *Compare* Denial Decision 10–15 *with* Ex. 1011, 1–2; *see also infra* Section IV.B (maintaining our earlier claim construction analysis).

[2] There are, however, many additional prior art bases for invalidity asserted in the related district court litigation.

Samsung Exhibit 1012, Page 5 of 58
Samsung Electronics Co., Ltd. v. WIPQTUS, INC.
IPR2024-00023

September 2020, with further delays possible." *Id.* at 9. Petitioner also asserts that "[d]enying an IPR petition simply because a parallel district court action could theoretically resolve invalidity before a final decision by the Board also undercuts § 315(b)'s one-year safe-harbor provision for filing an IPR." *Id.* at 5.

Since our Denial Decision on February 2, 2020, the Board issued an order in *Fintiv*, designated as precedential, involving the application of *NHK*.[3] There, the Board ordered supplemental briefing on a nonexclusive list of factors for consideration in analyzing whether the circumstances of a parallel district court action are a basis for discretionary denial of trial institution under *NHK*. *Fintiv*, Paper 11 at 5–16. Those factors are:

> 1. whether the court granted a stay or evidence exists that one may be granted if a proceeding is instituted;
>
> 2. proximity of the court's trial date to the Board's projected statutory deadline for a final written decision;
>
> 3. investment in the parallel proceeding by the court and the parties;
>
> 4. overlap between issues raised in the petition and in the parallel proceeding;
>
> 5. whether the petitioner and the defendant in the parallel proceeding are the same party; and
>
> 6. other circumstances that impact the Board's exercise of discretion, including the merits.

---

[3] *General Plastic Industrial Co., Ltd. v. Canon Kabushiki Kaisha*, IPR2016-01357, Paper 19 (PTAB Sept. 6, 2017) (precedential as to § II.B.4.i), provides seven, non-exhaustive factors informing an analysis under 35 U.S.C. § 314(a) when more than one petition are filed. Here, to our knowledge, no other petitions for *inter partes* review have been filed over the '740 patent by Petitioner. Therefore, *General Plastic* does not apply.

Samsung Exhibit 1012, Page 6 of 58
Samsung Electronics Co., Ltd. v. WIPQTUS, INC.
IPR2024-00023

Id. at 5–6.

In consideration of Petitioner's assertion in the Request for Reconsideration that the nature of the related district court litigation's trial schedule is uncertain and changing, we authorized additional briefing and evidence by the parties regarding these *Fintiv* factors, which we find helpful in evaluating the current circumstances. Paper 19. As noted above, both parties have submitted supplemental briefing directed to the *Fintiv* factors. Papers 20, 22. Based on the parties' supplemental briefing, we analyze the *Fintiv* factors below.

1. WHETHER THE COURT GRANTED A STAY OR EVIDENCE EXISTS THAT ONE MAY BE GRANTED IF A PROCEEDING IS INSTITUTED

The parties' supplemental briefing and evidence here explains that no stay has been requested or ordered in the related district court litigation. Paper 20, 4–5; Paper 22, 2–4; Ex. 2009 (copy of civil docket reflecting no motion or order for a stay of proceedings). Petitioner argues that district courts routinely grant stays pending resolution of *inter partes* review, and Patent Owner argues that district courts routinely deny them, in particular, the district court having jurisdiction over the related case. Paper 20, 4–5; Paper 22, 2–4.

In the absence of specific evidence, we will not attempt to predict how the district court in the related district court litigation will proceed because the court may determine whether or not to stay any individual case, including the related one, based on a variety of circumstances and facts beyond our control and to which the Board is not privy. Therefore, we do not find that this factor weighs in favor of either exercising or not exercising discretion to deny institution under 35 U.S.C. § 314(a).

Samsung Exhibit 1012, Page 7 of 58
Samsung Electronics Co., Ltd. v. WIPQTUS, INC.
IPR2024-00023

2. *Proximity of the Trial Date to the Board's Projected Statutory Deadline for a Final Written Decision*

Petitioner's assertions in its Request for Rehearing and supplemental briefing, in view of the additional evidence submitted as authorized, establish that the trial date of the related district court litigation is uncertain. Req. Reh'g 3, 8–9, 13–14; Paper 22, 4–6 (citing Ex. 1013); *see also* Ex. 1012; Ex. 1013; Ex. 2004; Ex. 2009; Ex. 2021; Ex. 3003. Patent Owner does not directly contest this assertion, but identifies that "the district court trial is scheduled to occur on November 9, 2020, at least five months (and more realistically six to seven months) before any final decision from the Board would be due." Paper 20, 6; *but see* Ex. 3003 (new scheduling order indicating "February 8, 2021 (or as available)" as the trail date). Patent Owner also argues that the extensions of the schedule ordered by the court in the related district court litigation were "initially proposed" by the Petitioner; however, Patent Owner's own evidence shows that the motions to amend the schedule were *jointly* filed. Paper 20, 6; Ex. 2009 (docket entries 86, 94).

Since our Denial Decision on February 5, 2020, the parties have jointly moved the district court to extend schedule deadlines twice; these motions were granted.[4] Ex. 2009 (docket entries 86, 87, 94, 95); *but see* Paper 20, 6 (asserting it was Petitioner that initially proposed the schedule extensions, citing Ex. 2025 and Ex. 2026, which are emails between the parties' respective counsels). Furthermore, the district court's express inclusion of the qualifier "or as available" for each calendared trial date of

[4] Before our Denial Decision, it appears that the district court also amended its scheduling order at least two times. Ex. 2009 (docket entries 69, 80).

Samsung Exhibit 1012, Page 8 of 58
Samsung Electronics Co., Ltd. v. WIPQTUS, INC.
IPR2024-00023

its evolving schedule, which indicates a continuing degree of recognized uncertainty of the court's schedule by the court. Ex. 2004 (original trial date was Apr. 27, 2020, changed to July 20, 2020 (or as available)); Ex. 1012 (updated trial date of Sept. 28, 2020 (or as available) changed to Nov. 9, 2020 (or as available)). Since the parties' supplemental briefing and evidence was submitted on April 13, 2020, the district court again amended its scheduling order in the related litigation; the jury trial is now indicated as scheduled to begin "February 8, 2021 (or as available)." Ex. 3003 ("Order Amending Scheduling Order" responding to a joint motion by the parties).

Accordingly, at this point it is unclear that the court in the related district court litigation will adhere to any currently scheduled jury trial date or, if it is changed, when such a trial will be held.

Moreover, generally, barring exceptional circumstances, the Board adheres to a one-year statutory deadline prescribed by 35 U.S.C. § 316(a)(11) for entry of final decisions in instituted *inter partes* reviews. And, even in the extraordinary circumstances under which the entire country is currently operating because of the COVID-19 pandemic, the Board continues to be fully operational. *See* Ex. 1013. The Board's judges and staff continue to operate on their normal schedules, albeit remotely, and Board oral hearings continue to be conducted on schedule.

For the reasons above, particularly because of the number of times the parties have jointly moved for and the district court agreed to extend the scheduling order dates, the inclusion of the qualifier "or as available" for each calendared trial date, that the currently scheduled trial date is in relatively close proximity to the expected final decision in this matter, and the uncertainty that continues to surround the scheduled trial date, we find

that this factor weighs marginally in favor of not exercising discretion to deny institution under 35 U.S.C. § 314(a).

3. INVESTMENT IN THE PARALLEL PROCEEDING BY THE COURT AND THE PARTIES

Patent Owner asserts that its investment in the related district court litigation has been "substantial," including most facets of discovery and expert reports. Paper 20, 7. Petitioner asserts that, "[a]side from a *Markman* hearing," which resulted in "a two-page *Markman* Order, stating that for each disputed claim term, 'the proper construction . . . is the plain and ordinary meaning," the district court "has invested little time into considering the merits of any invalidity positions." Paper 22, 6.

We agree with Petitioner that the district court and the parties have not invested substantially in the merits of the invalidity positions. *See Fintiv*, Paper 15 (May 13, 2020) (non-precedential) at 14 (denying institution; analyzing the district court's and parties' investment in the invalidity contentions) ("*Fintiv* DI"). In the *Fintiv* DI, the Board found that the completed *Markman* hearing and order, completed contention discovery, but incomplete expert discovery and substantive motion practice, weighed "somewhat" in favor of denying institution. *Id.* at 13–14. This case is similar in some respects. Here, the parties have exchanged infringement and invalidity contentions, and the district court has conducted a *Markman* hearing and entered a related Order, repeatedly set and amended the case's schedule, granted several *pro hac vice* motions, heard and denied a motion to dismiss, and transferred the case from one judge to another. *See* Ex. 2004; Ex. 2009; Ex. 3003. But aside from the district court's *Markman* Order, much of the district court's investment relates to ancillary matters untethered to the validity issue itself. And the district court's two-page

Samsung Exhibit 1012, Page 10 of 58
Samsung Electronics Co., Ltd. v. WIPQTUS, INC.
IPR2024-00023

Markman Order in this case does not demonstrate the same high level of investment of time and resources as the detailed *Markman* Order in *Fintiv*. *See Fintiv*, Paper 15 at 14 (noting that the district court issued a detailed 34-page claim construction order construing seven claim terms). Also, we recognize that much work remains in the district court case as it relates to invalidity: fact discovery is still ongoing, expert reports are not yet due, and substantive motion practice is yet to come. *See* Ex. 3003. Thus, although the parties and the district court have invested effort in the related district court litigation to date, further effort remains to be expended in this case before trial.

For the reasons above, we find that this factor weighs only marginally, if at all, in favor of exercising discretion to deny institution under 35 U.S.C. § 314(a).

4. Overlap Between Issues Raised in the Petition and in the Parallel Proceeding

This factor evaluates "concerns of inefficiency and the possibility of conflicting decisions" when substantially identical prior art is submitted in both the district court and the *inter partes* review proceedings. *Fintiv*, Paper 11 at 12. Patent Owner asserts that this proceeding and the related district court litigation "involve[] the same patent, same claims, same invalidity references, and nearly identical invalidity arguments." Paper 20, 8. Petitioner asserts that "Petitioner's district court invalidity contentions contain various prior-art references not at issue in the IPR, including several prior-art systems in use or on sale during the relevant time period. *See* EX1014 at 4-8. The overlap is therefore minimal." Paper 22, 7. Also, in order "[t]o eliminate any doubt as to overlap between the proceedings, Petitioner has stipulated to counsel for Patent Owner that, if the IPR is

Samsung Exhibit 1012, Page 11 of 58
Samsung Electronics Co., Ltd. v. WIPQTUS, INC.
IPR2024-00023

instituted, Petitioner will not pursue the same grounds in the district court litigation." Paper 22, 7 (citing Ex. 1015).

As the majority noted in the Denial Decision, "although the issues on patentability here are more focused than the invalidity contentions in the district court litigation, the patentability issues presented here are nevertheless a subset of the issues in the district court case." Denial Decision 17–18. Petitioner's stipulation, however, mitigates to some degree the concerns of duplicative efforts between the district court and the Board, as well as concerns of potentially conflicting decisions.[5]

Thus, we find that this factor weighs marginally in favor of not exercising discretion to deny institution under 35 U.S.C. § 314(a).

5. WHETHER PETITIONER AND THE DEFENDANT IN THE PARALLEL PROCEEDING ARE THE SAME PARTY

The parties to this proceeding are the same as those of the related district court litigation. Paper 22, 7; Paper 20, 8 (Patent Owner asserts only that Petitioner is the defendant in the parallel action). Although it is far from an unusual circumstance that a petitioner in *inter partes* review and a

[5] Notably, Petitioner stipulates only that it will not pursue, in district court, the "same grounds" presented in the Petition in this case. Ex. 1015. Petitioner could have stipulated that it would not pursue any ground raised or that could have been reasonably raised in an IPR, i.e., any ground that could be raised under §§ 102 or 103 on the basis of prior art patents or printed publications. A broader stipulation of that nature, not at issue here, might better address concerns regarding duplicative efforts and potentially conflicting decisions in a much more substantial way. Likewise, such a stipulation might help ensure that an IPR functions as a true alternative to litigation in relation to grounds that could be at issue in an IPR. Further still, Petitioner could have expressly waived in the district court any overlapping patentability/invalidity defenses. Doing so might have tipped this factor more conclusively in its favor.

Samsung Exhibit 1012, Page 12 of 58
Samsung Electronics Co., Ltd. v. WIPQTUS, INC.
IPR2024-00023

defendant in a parallel district court proceeding are the same, or where a district court is scheduled to go to trial before the Board's final decision would be due in a related *inter partes* review, this factor weighs in favor of discretionary denial. *Fintiv*, Paper 11 at 13–14.

6. OTHER CIRCUMSTANCES THAT IMPACT THE BOARD'S EXERCISE OF DISCRETION, INCLUDING THE MERITS

Patent Owner asserts that "[n]o other circumstances warrant upsetting the Denial Decision." Paper 20, 8–10. Petitioner asserts that "[a]dditional circumstances strongly favor institution," and raises several policy-based arguments. Paper 22, 8–10. We need not consider Petitioner's policy arguments given that the balance of previously discussed factors weigh in favor of Petitioner.

Moreover, as discussed below, Petitioner has met its burden of demonstrating a reasonable likelihood that it would prevail in showing that claims of the '740 patent are unpatentable. At this preliminary stage of the proceeding and on the record before us, Petitioner's case is strong on most challenged claims. *Fintiv,* Paper 11 at 14–15 ("[I]f the merits of a ground raised in the petition seem particularly strong on the preliminary record, this fact has favored institution."). Although we recognize the record can change during trial, as discussed in detail below, Petitioner has made a sufficiently persuasive showing, on the record presently before us, that the prior art references cited in the Petition teach or suggest all limitations of most challenged claims.

We determine, on this preliminary record, that Petitioner has set forth a reasonably strong case for the obviousness of most challenged claims. Thus, this factor weighs in favor of not exercising discretion to deny institution under 35 U.S.C. § 314(a).

Samsung Exhibit 1012, Page 13 of 58
Samsung Electronics Co., Ltd. v. WIPQTUS, INC.
IPR2024-00023

C. *Conclusion on Rehearing and Discretionary Denial of Institution*

As noted in *Fintiv*, we consider six factors when taking "a holistic view of whether efficiency and integrity of the system are best served by denying or instituting review." *Fintiv*, Paper 11 at 6. For the reasons discussed above, the *Fintiv* factors weigh against invoking our discretion to deny institution. Considering the *Fintiv* factors as part of a holistic analysis, we are not persuaded that the interests of the efficiency and integrity of the system would be best served by invoking our authority under 35 U.S.C. § 314(a) to deny institution of a potentially meritorious Petition.

For the reasons discussed above, we modify our initial decision denying institution. On rehearing, after considering the factors outlined in the precedential order in *Fintiv*, we decline to deny institution under § 314(a). Accordingly, we grant Petitioner's Request for Rehearing. We consider the merits of the Petition with respect to the threshold for institution below.

III. Background of Proceeding

A. *The '740 Patent*

The '740 patent issued on February 3, 2015, from application serial number 12/909,357, which was filed on October 21, 2010. Ex. 1001, codes (45), (21), (22). The '740 patent identifies its inventors as Gary Teichrob, Scott Mason, Dave Keck, and James Easden. *Id.* at code (75).

The '740 patent's Abstract indicates the invention is directed to:

> A method and system for handling granular material, such as proppant used in hydraulic fracturing in well drilling, is provided. In an operational configuration, a delivery module having conveyors receives and conveys granular material to a delivery location, and one or more mobile storage modules

Samsung Exhibit 1012, Page 14 of 58
Samsung Electronics Co., Ltd. v. WIPQTUS, INC.
IPR2024-00023

> receive, hold and dispense granular material downward to the delivery module. The mobile storage modules comprise a raised, angular container portion for holding granular material. Each module may comprise a rock-over chassis for support against ground. In a transportation configuration, each of the delivery modules and mobile storage modules are separately transportable as semi-trailers. System redundancy features such as hydraulic power packs are also provided for.

Id. at Abstract (57).

As indicated in its Abstract, the '740 patent is directed to a two-module-based system, where a storage module (or several) is oriented adjacent a delivery module such that the storage module(s) delivers granular material to the delivery module, which can then convey the material to some delivery location. Such a system is illustrated at the '740 patent's Figure 1, which is reproduced below:

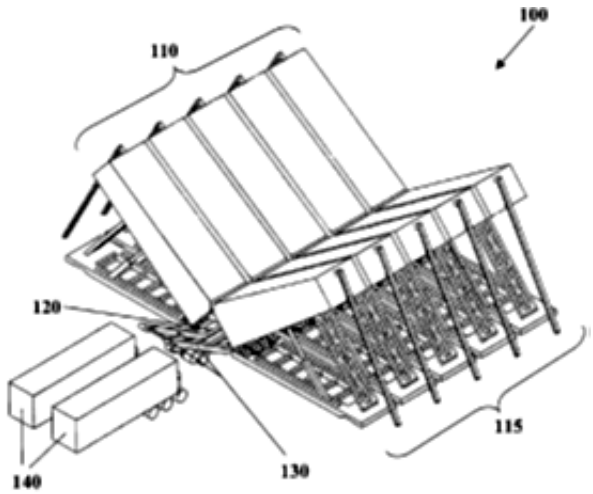

Ex. 1001, Fig. 1. Figure 1, above, shows system 100 for handling granular material, having two sets of five mobile storage modules 110, 115 arranged on either side of delivery module 120. *Id.* at 4:4–12. The mobile storage modules 110, 115 are pivoted upward, with their pivot points being on frame sections thereof nearest the delivery module so that each is sloped towards

the delivery module. The delivery module has discharge conveyors 130 for moving granular material discharged from the mobile storage modules to some desired location and height. *Id.* 4:21–23.

The ’740 patent describes that each of the mobile storage module and delivery module is reconfigurable between transportation and operational configurations. *Id.* at 5:13–16. As their identified configurations suggest, one is for transporting the module and one is for using the module for storing or conveying granular material. *Id.* at 5:16–20.

In its transportation configuration, the mobile storage module is disclosed to be a trailer towable by a truck. This is illustrated by Figure 2 of the ’740 patent, reproduced below:

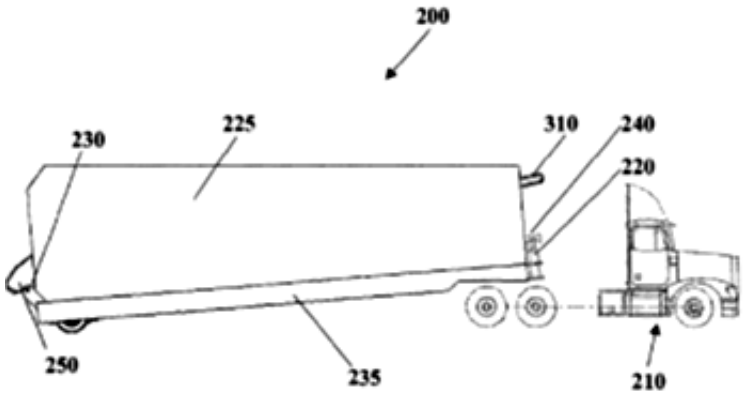

Id. at Fig. 2. Figure 2 shows a side view of mobile storage module 200 in its transportation configuration, as a trailer hitched to truck 210 and having container portion 225 and frame 235, which supports the container portion 225 and is connected thereto at hinge 230. *Id.* at 6:34–8:48. The container portion 225 also includes discharge chute 250 positioned to discharge granular material when container portion 225 is pivoted at hinge 230 to be in its operational configuration, which is shown in Figure 1, above. *Id.* at 8:49–56.

Samsung Exhibit 1012, Page 16 of 58
Samsung Electronics Co., Ltd. v. WIPQTUS, INC.
IPR2024-00023

A more detailed illustration of the mobile storage module in its operational configuration is shown by the '740 patent at its Figure 3, reproduced below:

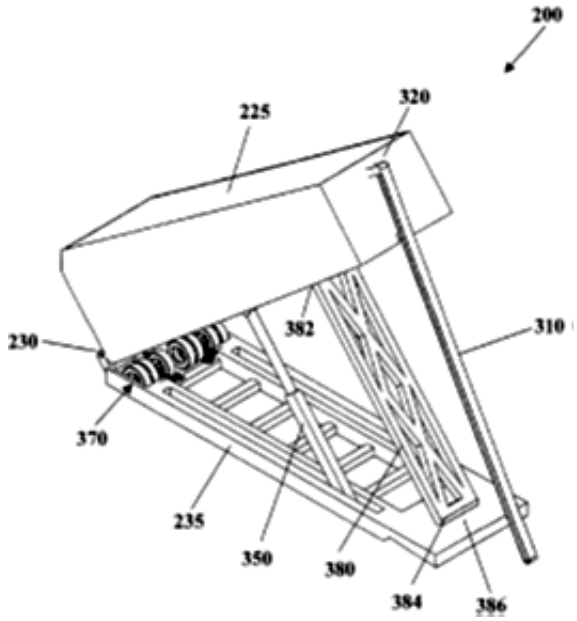

Id. at Fig. 3. Figure 3, above, shows a perspective view of mobile storage module 200 it its operational configuration, detached from the truck of Figure 2, pivoted at hinge 230, and arranged as an erected silo. *Id.* at 6:48–54. Figure 3 shows that container portion 225 of mobile storage module 200 is raised into this operational position with an actuating system in the form of hydraulic actuator 350 coupled to container portion 225 and frame 235. *Id.* at 6:60–7:2. Figure 3 also shows input port 320 on the elevated end of container portion 225 where granular material may be loaded thereinto. *Id.* at 8:40–43.

The configurability of the delivery module is illustrated in the '740 patent's Figure 11, reproduced below:

Samsung Exhibit 1012, Page 17 of 58
Samsung Electronics Co., Ltd. v. WIPQTUS, INC.
IPR2024-00023

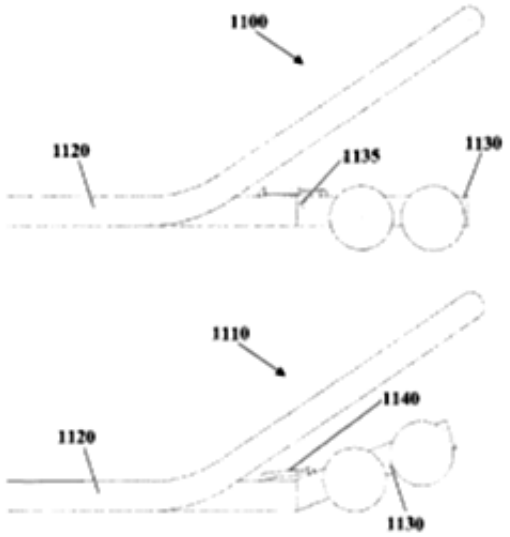

Id. at Fig. 11. Figure 11, above, shows two views of a portion of a delivery module, one in transportation configuration 1100 (top) and one in operational configuration 1110 (bottom). *Id.* at 12:53–56. In its transportation configuration 1100 the delivery module has wheeled portion 1130 extending from chassis 1120 such that the wheels are lowered to engage the ground. *Id.* at 12:59–61. As shown in the bottom illustration above, in its operational configuration 1100, wheeled portion 1130 is pivoted upward by hydraulic cylinders 1140 so that wheeled portion 1130 is raised and chassis 1120 is respectfully lowered to engage the ground for load distribution. *Id.* at 12:60–13:4.

Independent claim 1 of the ’740 patent reads as follows:

> 1. A system for handling granular material, the system comprising:
>
> a. a delivery module configured, in a delivery module operational configuration, to receive said granular material and to convey said granular material to a predetermined delivery location via a continuous belt conveyor;

> b. one or more mobile storage modules adjacent to the delivery module, each of the one or more mobile storage modules configured, in a mobile storage module operational configuration, to hold and dispense said granular material downward to the delivery module and to receive said granular material for holding via a continuous belt loading system operatively coupled to an input port, the continuous belt loading system being separated from the continuous belt conveyor by the mobile storage module;
>
> wherein the delivery module is mobile and reconfigurable between said delivery module operational configuration and a delivery module transportation configuration and wherein each of the one or more mobile storage modules comprises an integrated actuating system for moving a container portion thereof between a lowered position and a raised position, the raised position corresponding to the mobile storage module operational configuration, and
>
> wherein each of the one or more mobile storage modules further comprises:
>
> a. a frame;
>
> b. the container portion supported by the frame and pivotably coupled thereto, the container portion configured to store said granular material and comprising the input port for receiving said granular material and an output port for dispensing said granular material; and
>
> c. the integrated actuating system configured to pivot the container portion between the lowered position and a the raised position, wherein, in the raised position, the input port is located above the output port.

Ex. 1001, 14:62–15:32. Independent claim 13 is directed to a mobile storage module, similar to the one or more mobile storage modules recited by claim 1, and, although there are some differences, recites essentially the same claim elements with respect to those of claim 1 directed to its mobile storage module(s). *Id.* at 16:24–45. Independent claim 19 is directed to a method

Samsung Exhibit 1012, Page 19 of 58
Samsung Electronics Co., Ltd. v. WIPQTUS, INC.
IPR2024-00023

for handling granular material, which includes providing the structures recited by claim 1. *Id*. at 17:5–18:15.

B. Petitioner's Asserted Grounds for Unpatentability

Petitioner asserts two grounds for the unpatentability of claims 1, 2, 4, 6–14, and 16–20 of the '973 patent, as follows:

Grounds	Claims Challenged	35 U.S.C. §	References
1	1, 2, 4, 6–9, 11–14, 16, 17, 19, 20	103	Forsyth,[6] Haskins,[7] Blackman[8]
2	10, 18	103	Forsyth, Haskins, Blackman, Grotte[9]

In support of these grounds for unpatentability, Petitioner submits, *inter alia*, the Declaration of Robert Schaaf. Ex. 1003 ("Schaaf Declaration"). We discuss the asserted referenced below.

C. Forsyth

Forsyth issued on February 17, 1998, from application serial number 668,523, which was filed on June 28, 1996; it claims priority as a continuation-in-part application to application serial number 427,807, filed April 26, 1995. Ex. 1005, codes [45], [21], [22], [63]. Forsyth is prior art to the '740 patent's claims.

[6] US 5,718,556 (issued Feb. 17, 1998) (Ex. 1005, "Forsyth").
[7] US 3,208,616 (issued Sept. 28, 1965) (Ex. 1006, "Haskins").
[8] US 2,753,979 (issued July 10, 1956) (Ex. 1007), "Blackman").
[9] US 4,621,972 (issued Nov. 11, 1986) (Ex. 1008, "Grotte").

> In its Abstract, Forsyth states that it is directed to
>
> [a] bulk granular material transport system having multiple compartments with a detachable elevating conveyor to permit the conveyor to assist with unloading as well as loading of the transport device. Each compartment may be individually discharged onto a horizontal conveyor which delivers the seed to the elevating conveyor when the elevating conveyor is in its first position. The elevating conveyor is suspended from an adjustable crane which is pivotable on the frame of the transport system. The elevating conveyor may be released from its first position such that the discharge of the elevating conveyor may be positioned over a compartment of the transport device. All mechanisms are individually actu[at]able through a remote control device.

Id. at code [57]. Forsyth illustrates such a bulk granular material transport system at its Figure 1, reproduced below:

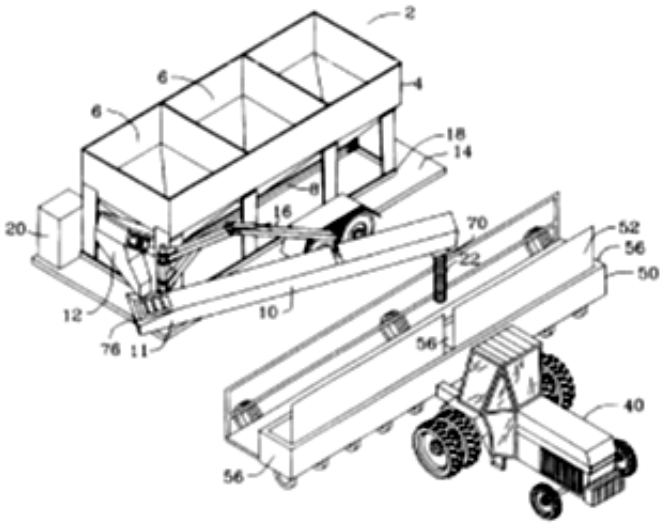

FIG. 1

Id. at Fig. 1. Figure 1 shows a perspective view of Forsyth's "invention 2," which is shown in use for holding seed grain and transporting it to fill an adjacent planter 50 attached to tractor 40. *Id.* at 4:15–17. Forsyth discloses the configuration of the system 2 to be a deployed, off-loading position. *Id.*

at 3:47–52, 4:22. The system invention 2 is shown to have a compartment assembly 4 with three compartments 6, shown open at their tops, arranged for holding granular material, e.g., seed. *Id.* at 4:15–47; *see also id.* at Fig. 2. In Figure 1, system 2 is supported on frame 18, which is mounted on a suitable trailer 14 so that it may be transported. *Id.* at 4:33–35. The system 2 is shown having first conveyor 8 below the compartments 6 for receiving granular material therefrom and then delivering it to chute 12, which directs the material to intake hopper 76 on the end 11 of elevating conveyor 10. *Id.* at 4:26–32. The first conveyor 8 operates via endless belt 130 and is fixed below the compartments. *Id.*; *see also id.* at 5:40–42, Fig. 6. The elevating conveyor 10 is not fixed, but is movable, and is shown configured by crane 16 of system 2 to receive granular material from first conveyor 8 and transport it to planter 50 attached to tractor 40. *Id.* at 4:26–32.

Another view of the system 2 of Forsyth is shown in its Figure 3, reproduced below:

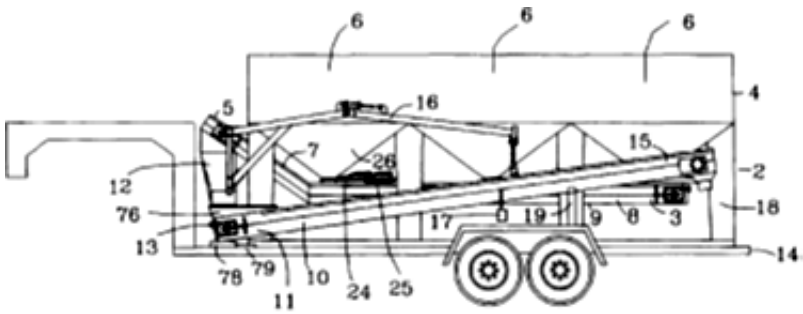

FIG. 3

Id. at Fig. 3. As in Figure 1, Figure 3 shows a side view of system 2 mounted to trailer 14. "In FIG. 3, elevating conveyor 10 is shown in its storage position alongside compartment assembly 4 and resting on support

19. Intake end 11 of elevating conveyor 10 is retained to frame 18 by turntable 78." *Id.* at 6:42–45.

D. HASKINS

Haskins issued on September 28, 1965, from application serial number 296,278, filed July 19, 1963. Ex. 1006 1:1–4. Haskins is prior art with respect to the '740 patent's claims.

As an introduction, Haskins discloses that its

> invention relates to a novel portable storage bin for the storage of dry materials such as grain, fertilizer, seed, or other flowable materials.
>
> The present invention is concerned with a storage bin which is portable and fully automatic, capable of acting as a grain elevator or storage bin in the field. The bin is movable from a horizontal transport position on a mobile framework to a vertical storage position in which it is capable of storing a day's supply of grain, seed, fertilizer, peas, beans, or other dry flowable material. The bin features a top compartment which is used to load highway trucks for transport purposes and a lower overflow compartment to which excess material is automatically shunted for selective transfer to the upper compartment at a later time. The apparatus also features delivery and elevating means for transferring materials from a field truck to the upper compartment of the storage bin.

Id. at 1:7–23. An illustration of such a portable storage bin is provided by Haskins at Figure 1, reproduced below:

Samsung Exhibit 1012, Page 23 of 58
Samsung Electronics Co., Ltd. v. WIPQTUS, INC.
IPR2024-00023

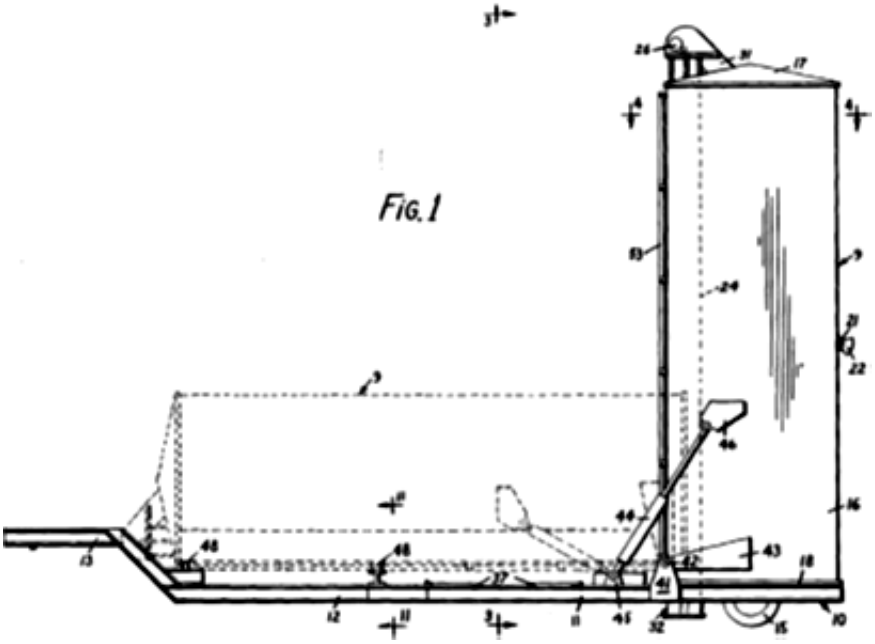

Id. at Fig. 1. Haskins's Figure 1 shows a side view of its storage bin apparatus having container 9 mounted to supporting framework 10 on wheels 15; thereby, container 9 can be pulled by a vehicle. *Id.* at 2:30–45. The container 9 is illustrated to have 2 configurations, one where it is positioned upright on frame 10, as indicated by the solid-line drawing, and one where it is laid down horizontally on frame 10, indicated by the dashed-line of the drawing. Container 9 is shown to be connected to framework 10 at pivot shaft 42, and its raising and lowering is controlled by hydraulic cylinder assemblies 44 mounted to the container's sides and to framework 10. *Id.* at 3:40–51.

The interior workings of container 9 are shown in Haskins's Figure 9, reproduced with Figure 8 below:

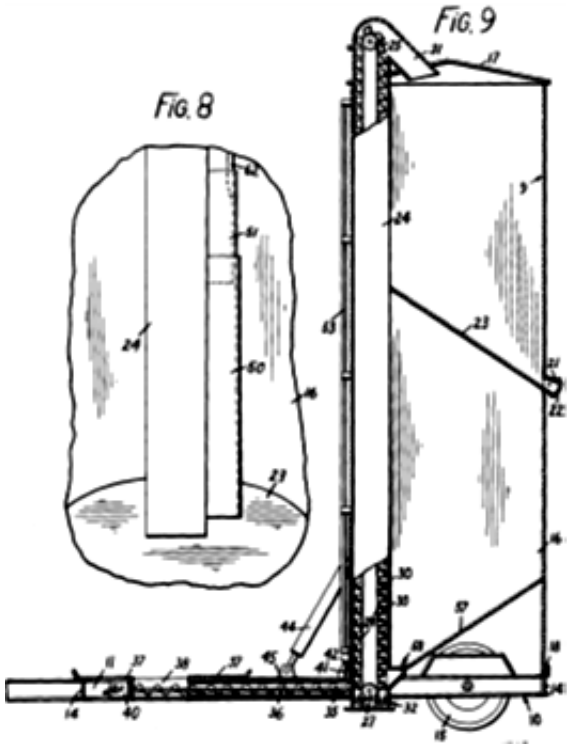

Id. at Fig. 9. Figure 9 shows a cross-section side view through a portion of the image shown at Figure 1, having the same container 9 and framework 10, but showing the inside of container 9. As shown, container 9 has two main compartments: an upper compartment with sloped floor 23 that terminates in spout 21 on exterior wall 16 of container 9; and a lower compartment that also has a sloped floor 57, which terminates in interior opening 58. *Id.* at 2:53–60, 3:66–67. The upper compartment holds 900 bushels of grain above spout 21, which is 14 feet above the ground line in the container's raised position; the grain from the upper compartment flows to and out this spout 21 under the force of gravity into, e.g., a trailer. *Id.* at 2:66–69, 5:45–49. Once the material resource is depleted from the upper container it may be replenished from additional grain, seed, fertilizer, peas, beans, or other dry flowable material stored in the lower compartment,

which flows to opening 58 and therethrough to a bucket-and-chain conveyor device 24, 28, 30, 31 that transports the material to the upper compartment. *Id*. at 2:70–3:10, 5:3–15.

Haskins explains that, in operation, framework 10 is moved to the desired location and driven into a trench 59 such that framework 10 rests on the ground. *Id.* at 4:31–44, Fig. 3. Thereafter, hydraulic cylinder assemblies 44 shift container 9 about its pivot shaft 41 from its horizontal to its vertical configuration and "provides complete control over the erection of the container." *Id.* at 4:44–48. "When the storage of material from a particular location has been completed, the empty tank is returned to its horizontal position and pulled from the trench 59 by the tractor . . . ." *Id.* at 5:11–15.

E. BLACKMAN

Blackman issued on July 10, 1956, from application serial number 236,256, filed July 11, 1951. Ex. 1007, 1:3–10. Blackman is prior art with respect to the '740 patent's claims.

Blackman states that its "invention relates to an elevating conveyor and has for one object to provide a conveyor adapted to convey relatively finely divided and easily broken material." Ex. 1007, 1:15–17. Blackman further states that "[a]mong the types of material which may be readily handled by the conveyor of the present invention are seeds, nutmeats, coffee beans, brittle pellets, and brittle articles of small size and generally frangible and friable materials." *Id.* at 1:25–29.

An image of this conveyor is illustrated by Blackman's Figure 1, reproduced below:

Samsung Exhibit 1012, Page 26 of 58
Samsung Electronics Co., Ltd. v. WIPQTUS, INC.
IPR2024-00023

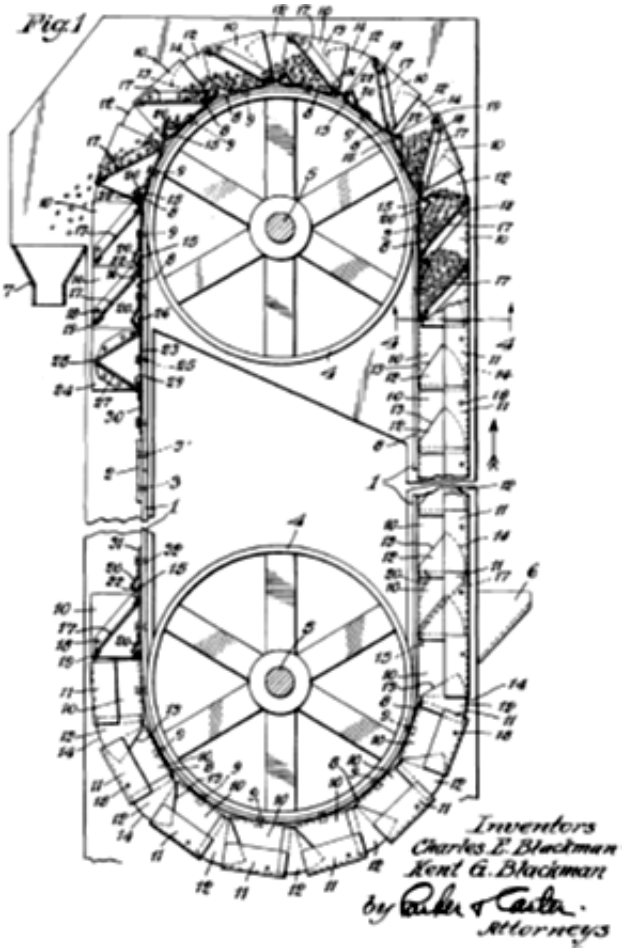

Id. at Fig. 1. Although Figure 1 is somewhat complex and is endowed with extensive reference labeling, in general, it shows a side view of Blackman's conveyor device, having an endless belt 1 positioned about pulleys 4 and carrying buckets (bottom portions 8, sides 10). *Id.* at 1:61–2:24. Blackman states that "it will be recognized that many changes in the form, shape and arrangement of parts may be made without departing from the spirit of the invention, and our showing is, therefore, to be taken as, in a sense, diagrammatic. In particular, the buckets might, if desired, be carried by a chain rather than by a belt." *Id.* at 4:5–11. Further, "[t]he conveyor

comprises a chain or a belt and to this are secured a plurality of buckets."

Id. at 4:17–18.

F. GROTTE

Grotte issued on November 11, 1986, from application serial number 702,478, filed on February 19, 1985. Ex. 1008, codes [45], [21], [22]. Grotte is prior art with respect to the '740 patent's claims.

Grotte's abstract states that its invention is directed to

> [a] silo mover apparatus comprising a main frame that is movable across the ground on a plurality of support wheels, and which has a subframe pivotally mounted thereon adjacent one end. The subframe can be raised about the pivot to a substantially vertical position through the use of hydraulic cylinders, stabilized in position adjacent to a silo to be moved, clamped to the silo by straps, after the silo has been suitably reinforced, and then the silo can be lifted and tilted downwardly with the subframe to rest on the main frame for transport to a new location.

Id. at code [57]. An image of such a silo mover apparatus is shown by Grotte's Figure 1, reproduced below:

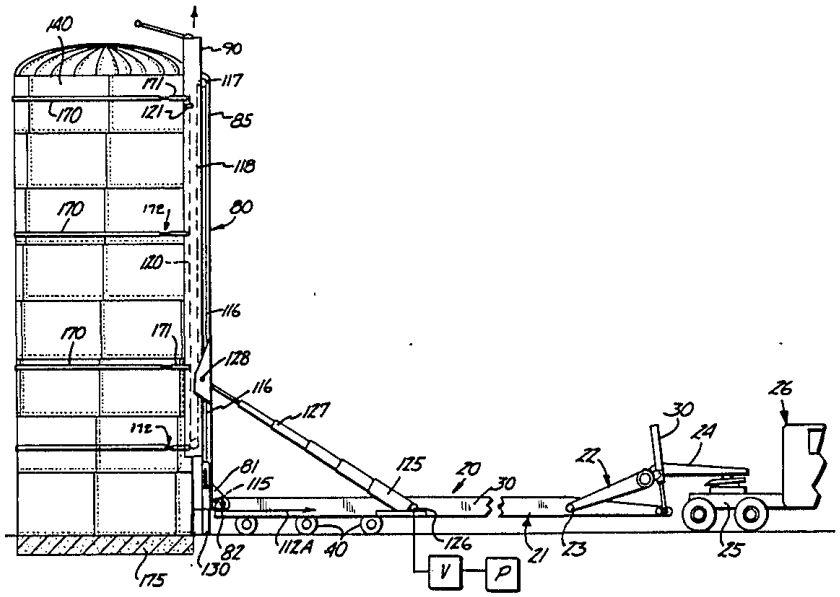

Id. at Fig. 1. Figure 1 is a side view of silo mover 20, which has a semitrailer with main frame 21 and wheels 40, which is hitched to truck 26. *Id.* at 1:24–28. The silo mover 20 is vertically holding silo 140 with the mover's subframe 80, which has large pivot bracket 81 positioned at the rear of frame 21 and at the lower end of silo 140. *Id.* at 6:25–29; 9:12–15. The pivoting of subframe 80 and silo 140 is accomplished with a pair of hydraulic cylinders 125 connected between main frame 21 and subframe 80. *Id.* at 8:35–39. For transport of silo 140, subframe 80 is pivoted about pivot bracket 81 and lowered to mainframe 21 with silo 140 so that silo 140 rests on silo mover 20. *Id.* at 2:54–56, Fig. 2.

Grotte further discloses that its silo mover has "six pivot support sleeves or tubes 36 and 37 for supporting [its] wheel assemblies." *Id.* at 3:50–51. Grotte teaches that the wheels can be raised or lowered relative to main frame 21 by operating cylinders 45 for the wheel assemblies and they can be operated to level the frame or maintain it at any desired height. *Id.* at 4:66–5:8.

IV. DISCUSSION

A. ORDINARY LEVEL OF SKILL IN THE ART

Petitioner states "[a] person of ordinary skill in the art ("POSITA") of the '740 Patent in October 2010 would have had a bachelor's degree in an engineering or logistics discipline plus 1–2 years of experience in hydraulic fracturing and logistical support thereof, or 4–5 years of experience in hydraulic fracturing and logistical support thereof." Pet. 9 (citing Ex. 1003 ¶ 30).

Samsung Exhibit 1012, Page 29 of 58
Samsung Electronics Co., Ltd. v. WIPQTUS, INC.
IPR2024-00023

Patent Owner neither contests Petitioner's proposed definition of the ordinary skilled artisan nor offers its own definition thereof. *See generally* Prelim. Resp.

For purposes of this Decision, we accept Petitioner's proposed definition, which is consistent with the level of skill in the art reflected in the prior art of record, including the Specification (Ex. 1001). *See Okajima v. Bourdeau*, 261 F.3d 1350, 1355 (Fed. Cir. 2001) ("[T]he prior art itself [may] reflect[] an appropriate level" as evidence of the ordinary level of skill in the art. (quoting *Litton Indus. Prods., Inc. v. Solid State Sys. Corp.*, 755 F.2d 158, 163 (Fed. Cir. 1985))).

B. CLAIM CONSTRUCTION

The Board interprets claim terms in an *inter partes* review using the same claim construction standard that is used to construe claims in a civil action in federal district court. 37 C.F.R. § 42.100(b) (2019). In construing claims, district courts give claim terms their ordinary and customary meaning, which is "the meaning that the term would have to a person of ordinary skill in the art in question at the time of the invention." *Phillips v. AWH Corp.*, 415 F.3d 1303, 1312–13 (Fed. Cir. 2005) (en banc).

Sources for claim interpretation include "the words of the claims themselves, the remainder of the specification, the prosecution history [i.e., the intrinsic evidence], and extrinsic evidence concerning relevant scientific principles, the meaning of technical terms, and the state of the art." *Id.* at 1314 (quoting *Innova/Pure Water, Inc. v. Safari Water Filtration Sys., Inc.*, 381 F.3d 1111, 1116 (Fed. Cir. 2004)). "[T]he claims themselves [may] provide substantial guidance as to the meaning of particular claim terms." *Id.* However, the claims "do not stand alone," but are part of "'a fully

Samsung Exhibit 1012, Page 30 of 58
Samsung Electronics Co., Ltd. v. WIPQTUS, INC.
IPR2024-00023

integrated written instrument,' . . . consisting principally of a specification that concludes with the claims," and therefore, the claims are "read in view of the specification." *Id.* at 1315 (quoting *Markman v. Westview Instruments, Inc.*, 52 F.3d 967, 978–79 (Fed. Cir. 1995)).

We analyze the parties' positions on claim interpretation in view of these standards of law and our Trial Practice Guide. Except as set forth below, no other claim language is interpreted at this stage of the proceedings. *Vivid Techs., Inc. v. Am. Sci. & Eng'g, Inc.*, 200 F.3d 795, 803 (Fed. Cir. 1999) ("[O]nly those terms need be construed that are in controversy, and only to the extent necessary to resolve the controversy."). This claim construction is the same as that set forth in the Denial Decision (Paper 12, 10–15).

1. "INTEGRATED ACTUATING SYSTEM"

Parties' Positions

Petitioner argues that the claim term "integrated actuating system," which is recited by claims 1, 12, 13, and 19, means "a built-in, self-deployment system." Pet. 10. Petitioner argues this definition "reflect[s] the plain and ordinary meaning[] of the term[]." *Id.* n.2. Petitioner argues that the Specification supports this definition and the '740 patent's prosecution history is consistent with this definition. Pet. 10–11 (citing Ex. 1001, 5:38–43, 6:63–67, 7:2–9, 8:35–39, 13:34–37; Ex. 1002, 75, 76, 78–80; Ex. 1003 ¶¶ 44–46). Relating to the word "integrated," Petitioner also cites a dictionary definition of the word. Pet. 11 (citing Ex. 1009).

Patent Owner argues that no claim terms, including this term, require construction. Prelim. Resp. 5–7. Patent Owner cites the claim interpretation (*Markman*) order in the related district court litigation, wherein the district

Samsung Exhibit 1012, Page 31 of 58
Samsung Electronics Co., Ltd. v. WIPQTUS, INC.
IPR2024-00023

court concluded that all contested claim terms, including this term, did not require express construction and each would be accorded its "plain and ordinary meaning that a person of ordinary skill in the art would ascribe to it." Ex. 1011, 1. The district court's order does not elaborate on its rationale for according the plain meaning to this (or any) term. However, Patent Owner also cites the related portions of the transcript of the hearing on claim construction in the related district court litigation. Prelim. Resp. 5–7 (citing Ex. 2007, 57, 60, 61, 63–65, 70–71).

Analysis

The claim term "integrated actuating system" is recited in claim 1, for example, as a component of the claimed mobile storage module(s), and is recited to be "for moving a container portion thereof between a lowered position and a raised position." Ex. 1001, 15:13–16. Further, claim 1 also recites that "the integrated actuating system [is] configured to pivot the container portion between the lowered position and a [*sic*] the raised position." *Id.* at 15:28–30.

Each of the individual words of the claim term "integrated actuating system" would have been readily understandable to the skilled artisan on its face, and the combination of these words into the recited phrase does not introduce any different meaning or ambiguity. The fact that the mobile storage module *comprises* the "integrated actuating system," as well as the inclusion of the word "integrated" in this disputed term, each supports that such a system is a part of the module; in other words, it is *built into* the module as proposed by Petitioner. Because the fact that the *actuating system* is built into the mobile storage module is evident from the claim language itself, defining the claim term expressly to include this concept is

unnecessary, as it would be redundant of the term's plain meaning as understood by the skilled artisan. Nothing in the intrinsic record, or other evidence submitted by Petitioner, is inconsistent with this conclusion.

Furthermore, regarding the proposed *self-deployment* concept, we also conclude it is unnecessary to add this concept to define the claim term in view of the plain meaning of "integrated actuating system." Per the plain language of the claim term, the system that actuates the mobile storage module, i.e., moves it between a lowered and raised position, is integrated into the mobile storage module. The mobile storage module's integrated components move, or actuate, the mobile storage module, per the plain meaning of the claim language. Thus, the system that is expressly recited as being a part of the module (*integrated*), actuates the module; the module actuates itself. Therefore, adding "self-deploying" to specially define the term "integrated actuating system" is unnecessary. Nothing in the intrinsic record is inconsistent with this conclusion. *See* Ex. 1002, 83–91 (arguing the characteristic of "self-deploying" invokes the inclusion of "an integrated actuating system," but not the converse).

Because Petitioner's proposed construction of "integrated actuating system" would add unnecessary and undesirable redundancy to the claims, we determine that it is unnecessary to expressly construe this claim term at this stage of the proceedings.

2. "RECONFIGURABLE"

Parties' Positions

Petitioner argues the claim term "reconfigurable," as recited by claims 1, 13, and 19, means "self-deployable." Pet. 12. Again, Petitioner argues that this definition "reflect[s] the plain and ordinary meaning[] of the

Samsung Exhibit 1012, Page 33 of 58
Samsung Electronics Co., Ltd. v. WIPQTUS, INC.
IPR2024-00023

term[].” *Id.* at 10 n.2. Petitioner argues that the Specification supports this definition and the ’740 patent’s prosecution history is consistent with this definition. *Id.* at 12 (citing Ex. 1001, 11:52–65; Ex. 1002, 88; Ex. 1003 ¶ 47).

Again, Patent Owner argues that no claim terms, including this term, require construction. Prelim. Resp. 5–7. Patent Owner cites the claim interpretation (*Markman*) order in the related district court litigation, wherein the district court concluded that all contested claim terms, including this term, did not require express construction and would be accorded its “plain and ordinary meaning that a person of ordinary skill in the art would ascribe to it.” Ex. 1011, 1. Patent Owner also cites the related portions of the transcript of the hearing on claim construction in the related district court litigation. Prelim. Resp. 5–7 (citing Ex. 2007, 57, 60, 61, 63–65, 70–71).

Analysis

Upon review of the Specification and prosecution history, we conclude the claim term “reconfigurable” needs no express construction because the meaning of the claim term is clear on its face. For example, claim 1 recites that the claimed delivery module is “reconfigurable between said delivery module operational configuration and a delivery module transportation configuration.” Ex. 1001, 15:10–13; *see also* Ex. 1002, 83–91 (arguing characteristic of “self-deploying” invokes the characteristic of “reconfigurable,” but not the converse).

It is clear that “reconfigurable,” in this context, would have been understood by the skilled artisan to mean the configuration of the delivery module can be changed. Moreover, the claim is also clear that such a configuration change in the delivery module is between an “operational

configuration, to receive said granular material and to convey granular material to a predetermined delivery location via a continuous belt conveyer" and a "transportation configuration," the delivery module being reconfigurable between the two. *Id.* at 14:64–15:13. Such reconfigurability, as claimed, is also described in the Specification as a changeable configuration. *See, e.g.*, Ex. 1001, 5:13–20, 11:4–65, 12:53–13:8. The concept of "self-deployable" is not a part of "reconfigurable." Even if a module can be self-deployable because it is reconfigurable, that does not mean that such a module is reconfigurable because it is self-deployable. *See* Ex. 1002, 83–91.

Therefore, aside from our observations above as to how the skilled artisan would have understood "reconfigurable," we determine that it is unnecessary to expressly construe this claim term further at this preliminary stage of the proceedings.

C. APPLICABLE LEGAL STANDARDS

"In an IPR, the petitioner has the burden from the onset to show with particularity why the patent it challenges is unpatentable." *Harmonic Inc. v. Avid Tech., Inc.*, 815 F.3d 1356, 1363 (Fed. Cir. 2016) (citing 35 U.S.C. § 312(a)(3) (requiring *inter partes* review petitions to identify "with particularity . . . the evidence that supports the grounds for the challenge to each claim")). This burden of persuasion never shifts to Patent Owner. *See Dynamic Drinkware, LLC v. Nat'l Graphics, Inc.*, 800 F.3d 1375, 1378 (Fed. Cir. 2015) (discussing the burden of proof in *inter partes* review).

Regarding obviousness, the Supreme Court in *KSR International Co. v. Teleflex Inc.*, 550 U.S. 398 (2007), reaffirmed the framework for determining obviousness as set forth in *Graham v. John Deere Co.*, 383 U.S.

Samsung Exhibit 1012, Page 35 of 58
Samsung Electronics Co., Ltd. v. WIPQTUS, INC.
IPR2024-00023

1 (1966). The *KSR* Court summarized the four factual inquiries set forth in *Graham* (383 U.S. at 17–18) that are applied in determining whether a claim is unpatentable as obvious under 35 U.S.C. § 103(a) as follows:
(1) determining the scope and content of the prior art; (2) ascertaining the differences between the prior art and the claims at issue; (3) resolving the level of ordinary skill in the pertinent art; and (4) considering objective evidence indicating obviousness or non-obviousness.[10] *KSR*, 550 U.S. at 406.

"The combination of familiar elements according to known methods is likely to be obvious when it does no more than yield predictable results." *Id.* at 416. "[W]hen the question is whether a patent claiming the combination of elements of prior art is obvious," the answer depends on "whether the improvement is more than the predictable use of prior art elements according to their established functions." *Id.* at 417.

With these standards in mind, and in view of the definition of the skilled artisan and claim interpretation discussed above, we address Petitioner's challenges below.

D. Ground 1 – Claims 1, 2, 4, 6–9, 11–14, 16, 17, 19, and 20 Obviousness over Forsyth, Haskins, and Blackman

Petitioner argues that claims 1, 2, 4, 6–9, 11–14, 16, 17, 19, and 20 would have been obvious under 35 U.S.C. § 103 over the prior art combination of Forsyth, Haskins, and Blackman. Pet. 12–73. In response, Patent Owner states only "the Office need not consider the merits of this

[10] At this stage of the proceeding, neither party has directed us to objective evidence indicating obviousness or non-obviousness.

Samsung Exhibit 1012, Page 36 of 58
Samsung Electronics Co., Ltd. v. WIPQTUS, INC.
IPR2024-00023

case," and, thus, presented no substantive arguments against Petitioner's positions under Ground 1. Prelim. Resp. 3.

Relevant to each of these claims, Petitioner provided an annotated image as a combination of Forsyth's and Haskins's respective Figures 1 to illustrate how a skilled artisan would have been motivated to combine or use the apparatuses of each reference in a system, as claimed. Because it is useful for understanding Petitioner's positions on how this prior art combination renders the '740 patent's claims obvious, we reproduce this image below:

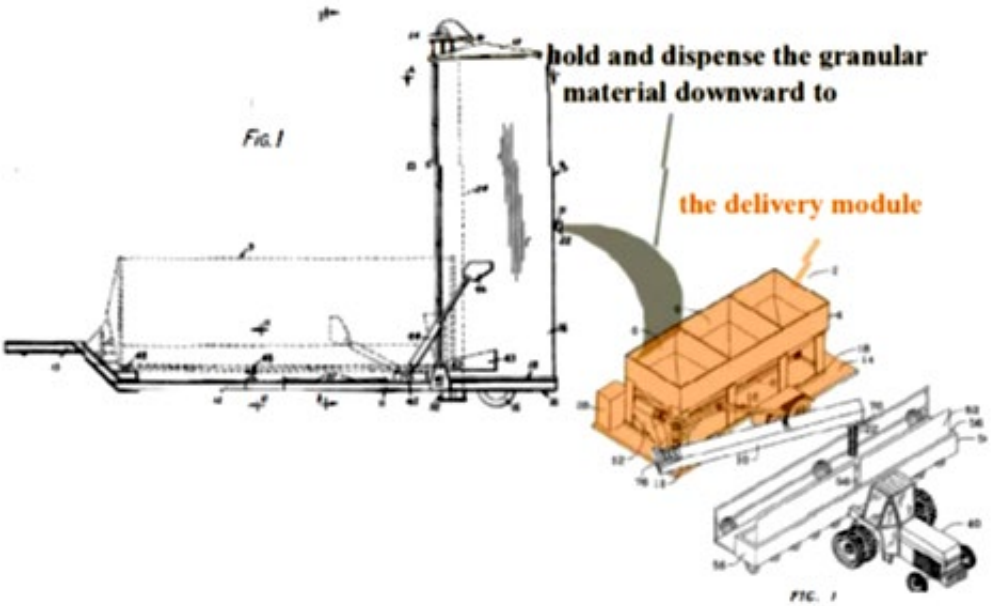

Pet. 24. Petitioner's image shows the storage bin apparatus with container 9 of Haskins (above-left) positioned adjacent to the apparatus 2 of Forsyth (above-right) where granular material is dispensing (grey stream) from spout 21 of Haskins's vertically oriented container 9 into compartments 6 of Forsyth's apparatus 2, which has its elevating conveyor 10 extended to dispense the granular material to planter 50 hitched to tractor 40.

Samsung Exhibit 1012, Page 37 of 58
Samsung Electronics Co., Ltd. v. WIPQTUS, INC.
IPR2024-00023

Petitioner's Positions: Claim 1

Regarding claim 1, Petitioner discusses its preamble, *"[a] system for handling granular material, the system comprising*,"[11] asserting that, if it is considered a limitation, both Haskins's bin and Forsyth's apparatus are for handling granular material, such as seeds, beans, fertilizer, or cement. *Id.* at 12–15 (citing Ex. 1003 ¶¶ 48, 49, 51; Ex. 1005, Abstract, 4:41–45, Fig. 1; Ex. 1006, 1:7–21, Fig. 1).

Continuing with the discussion of claim 1, Petitioner discusses its first element, "*a. a delivery module configured, in a delivery module operational configuration, to receive said granular material*," contending that it is taught by Forsyth. Pet. 15–17 (citing Ex. 1003 ¶¶ 54–56; Ex. 1005, 3:53–56, 4:24–32, 4:48–53, 6:36–41, 6:53–60, 8:31–37, Fig. 1). Petitioner argues that Forsyth's granular material transport system, e.g., the apparatus 2 of Forsyth's Figure 1, is the claimed "delivery module." *Id.* Petitioner argues that the configuration of this apparatus 2 shown in Forsyth's Figure 1 is its operational configuration because it is configured to receive granular material and convey it to a desired location. *Id.*

Petitioner next discusses the next element of claim 1, "*[the] delivery module configured, in a delivery module operational configuration, . . . to convey said granular material to a predetermined delivery location via a continuous belt conveyor*," asserting that Forsyth's conveyor 10 as shown in Forsyth's Figure 1 is configured so that it is extended to convey granular material using a continuous belt conveyer 74. Pet. 17–19 (citing Ex. 1003 ¶¶ 57, 59; Ex. 1005, 4:26–32, 7:18–37, Figs. 1, 4).

[11] Emphasis added here and below to highlight claim language.

Samsung Exhibit 1012, Page 38 of 58
Samsung Electronics Co., Ltd. v. WIPQTUS, INC.
IPR2024-00023

Petitioner next discusses the next element of claim 1, "*b. one or more mobile storage modules adjacent to the delivery module, each of the one or more mobile storage modules configured, in a mobile storage module operational configuration, to hold and dispense said granular material downward to the delivery module*," asserting Haskins's portable storage bin 9 teaches the claimed mobile storage module and, when vertically oriented, is configured to hold and dispense granular material downward via spout 21, therefore, being in an operational configuration, as claimed. Pet. 20–23 (citing Ex. 1003 ¶¶ 60–65; Ex. 1006 1:7–21, 1:49–50, 2:38–43, 2:53–69, 5:3–5, Fig. 1). Petitioner argues Haskins's bin 9, like the apparatus of Forsyth, is for storing granular material such as grain, beans, fertilizer, seed, or cement, and that the bin 9 is mobile as it is designed to be pulled by a vehicle, e.g., a tractor. *Id.* at 20–21 (citing Ex. 1003 ¶¶ 61–65; Ex. 1006, 1:7–21, 2:38–43). Petitioner argues the Haskins bin has two configurations: (1) a horizontal position for transport and (2) a vertical position for supplying, e.g., grain. Pet. 21–22 (citing Ex. 1006, 1:10–16, 1:49–50, Fig. 1). Petitioner argues that if the Forsyth apparatus was placed alongside the Haskins bin, the bin's spout would direct stored granular material downward to it. Pet. 23.

Petitioner also provides a rationale for combining Forsyth's and Haskins's teachings. Pet. 23–28. Petitioner contends that each of the devices of Forsyth and Haskins is mobile and can be towed as a trailer by a vehicle such that the two devices may be placed adjacent one another. Pet. 24–25 (citing, e.g., Ex. 1006, 5:3–5, Ex. 1005, 4:65–66; Ex. 1003 ¶¶ 66–68). Further, Petitioner argues the method disclosed by Forsyth for loading its apparatus with, e.g., seed, is slow and labor-intensive — it requires using a

Samsung Exhibit 1012, Page 39 of 58
Samsung Electronics Co., Ltd. v. WIPQTUS, INC.
IPR2024-00023

forklift to pour one bag of material at a time onto Forsyth's conveyor 10. *Id.* at 25–26 (citing Ex. 1003 ¶¶ 69–70; Ex. 1005, 2:36–54, 3:53–57, 4:48–53, 6:53–60, 8:15–23, Fig. 4). As such, Petitioner argues that using Haskins's container device for filling Forsyth's apparatus 2 would have been a recognized solution to the understood drawbacks of Forsyth's method; the skilled artisan would have sought the prior art combination to improve logistical efficiency. *Id.* at 26–27. Petitioner further argues the proposed combination of Forsyth and Haskins merely uses their taught devices predictably, in the same fashion taught by the references themselves; Petitioner alleges no real modification is required other than putting Haskins's storage bin container 9 next to Forsyth's apparatus 2. *Id.* at 27–28.

Petitioner then discusses the next element of claim 1, "*the one or more storage modules 'configured . . . to receive said granular material for holding via a continuous belt loading system operatively coupled to an input port'*," arguing that Haskins's bin 9 receives granular material via a continuous chain conveyor coupled to a receiving chute that is the claimed input port. Pet. 28–32 (citing Ex. 1003 ¶¶ 76–78, 80–83; Ex. 1006, 1:16–23, 2:21–27, 2:60–62, 3:1–10, 3:68–70, 4:3–23, 4:67–5:15, 5:39–52, Figs. 5, 9). Petitioner acknowledges that Haskins teaches a continuous chain driven loading system rather than a continuous belt loading system, as claimed. *Id.* at 32. Petitioner cites Blackman as teaching that continuous belt and continuous chain conveyors were well-known alternatives that may be substituted for one another and, therefore, argues it would have been obvious to the skilled artisan to substitute a belt for Haskins's chain for moving granular material. *Id.* at 32–34 (citing Ex. 1003 ¶¶ 79, 80–83; Ex. 1007,

Samsung Exhibit 1012, Page 40 of 58
Samsung Electronics Co., Ltd. v. WIPQTUS, INC.
IPR2024-00023

1:27–29, 1:54–55, 1:61–65, 1:68–71, 2:9–11, 2:16–17, 4:10–11, 4:17–50, Fig. 1). Petitioner also argues a belt would provide certain advantages over a chain, for example, tighter fit and adjustability. *Id.* at 37 (citing Ex. 1003 ¶ 83).

Petitioner continues to address the next element of claim 1, "*the continuous belt loading system being separated from the continuous belt conveyor by the mobile storage module*," and argues that in the way the skilled artisan would have been motivated to arrange the apparatuses of Haskins and Forsyth together, the elevating conveyor of Haskins (the claimed continuous belt loading system) would be separated from the conveyor 10 of Forsyth (the claimed continuous belt conveyor) by Haskins's bin. Pet. 38–39 (citing Ex. 1003 ¶ 85).

Petitioner then addresses the next element of claim 1, "*wherein the delivery module is mobile and reconfigurable between said delivery module operational configuration and a delivery module transportation configuration*," and argues Forsyth's apparatus 2 (the claimed delivery module) is reconfigurable between an operational configuration where its conveyor 10 is positioned to deliver granular material to a desired location, as shown in its Figure 1, and a transportation configuration where its conveyor 10 is stowed so that the apparatus can be towed, as shown in its Figure 3. Pet. 39–42 (citing Ex. 1003 ¶¶ 87–90; Ex. 1005, 2:21–54, 3:7–18, 3:48–52, 3:58–60, 4:15–35, 4:65–5:2, 6:33–41, 6:66–7:18, 7:47–8:8, 8:31–33, 8:37–44, Figs. 1, 3, 4, 8).

Petitioner addresses the next element of claim 1, "*wherein each of the one or more mobile storage modules comprises an integrated actuating system for moving a container portion thereof between a lowered position*

and a raised position, the raised position corresponding to the mobile storage module operational configuration," and argues that the hydraulic actuation system 41–46 of Haskins's container 9 apparatus is such an integrated actuation system because it is a part of the storage module and pivots the container 9 between raised and lowered positions. Pet. 42–44 (citing Ex. 1003 ¶¶ 91–93; Ex. 1006, 1:10–16, 3:40–44, 3:47–55, Fig. 1).

Addressing the next element of claim 1, "*wherein each of the one or more mobile storage modules further comprises: a. a frame; b. the container portion supported by the frame and pivotably coupled thereto*," Petitioner argues that the bin and container 9 of Haskins has a supporting framework 10 that supports the container 9, and that the container 9 is attached to the framework 10 by pivot supports 41 and a pivot shaft 42. Pet. 45–47 (citing Ex. 1003 ¶¶ 94, 96, 97; Ex. 1006, 2:30–43, 3:40–44, 3:51–57, 4:44–56, 5:63–6:9, 6:28–29, Fig. 1). As shown in Haskins's Figure 1, the container pivots about this pivot shaft.

Petitioner moves on to address the next element of claim 1, "*the container portion configured to store said granular material*," and argues Forsyth and Haskins teach containers for granular material and Haskin's container 9 is for storing granular material. Pet. 47–48 (citing Ex. 1003 ¶ 98; Ex. 1006, 1:16–23, 2:21–27, 3:68–70, 4:3–20, 4:22–23, 4:73–5:15, 5:39–52, Fig. 9).

Petitioner then addresses the next element of claim 1, the container portion "*comprising the input port for receiving said granular material and an output port for dispensing said granular material*," and argues that Haskins's Figure 9 shows such an input port in receiving chute 31 and an output port in spout 21. Pet. 48 (citing Ex. 1003 ¶ 100; Ex. 1006, Fig. 9).

Samsung Exhibit 1012, Page 42 of 58
Samsung Electronics Co., Ltd. v. WIPQTUS, INC.
IPR2024-00023

Addressing the next element of claim 1, "*c. the integrated actuating system configured to pivot the container portion between the lowered position and [] the raised position*," Petitioner argues that Haskins's hydraulic cylinder assemblies 44 move its container 9 between a horizontal/lowered position and a vertical/raised position by pivoting about pivot shaft 42. Pet. 49 (citing Ex. 1006, 3:40–44, 3:47–57).

Finally, Petitioner addresses the last element of claim 1, "*wherein, in the raised position, the input port is located above the output port*," and argues that Haskins's Figure 9 shows its container 9 in its raised position and that its receiving chute 31, the claim's input port, is above its spout 21, the claim's output port. Pet. 49–50 (citing Ex. 1003 ¶ 103; Ex. 1006, 2:53–58, 5:3–5, Fig. 9).

Analysis

We find that, in view of the above, Petitioner has reasonably accounted for every element of independent claim 1 as taught or suggested by Forsyth, Haskins, and Blackman. Further, Petitioner's rationale for combining these references is sufficiently persuasive at this stage of the proceeding. Petitioner has also made a sufficient showing that the skilled artisan would have had a reasonable expectation of successfully combining Forsyth, Haskins, and Blackman in the fashion proposed by Petitioner. As noted above, at this stage of the proceedings, Patent Owner has not substantively responded to Petitioner's arguments and evidence for obviousness.

Based on the preliminary record, we find Petitioner demonstrates a reasonable likelihood that it would prevail in showing that claim 1 of the '740 patent is unpatentable under Ground 1.

Samsung Exhibit 1012, Page 43 of 58
Samsung Electronics Co., Ltd. v. WIPQTUS, INC.
IPR2024-00023

Petitioner's Positions: Claims 2 and 4

Claims 2 and 4 depend from claim 1, which is discussed above. Claim 2 further requires "*each of the one or more mobile storage modules are reconfigurable between said mobile storage module operational configuration and a mobile storage module transportation configuration, the one or more mobile storage modules towable as separately transportable trailers in the mobile storage module transportation configuration*," and claim 4 further requires "*the delivery module is towable as a separately transportable trailer in the delivery module transportation configuration*." Ex. 1001, 15:33–39, 15:43–45. Petitioner asserts that Forsyth's and Haskins's apparatuses, i.e., the claimed delivery module and mobile storage module, respectively, as discussed above, have first configurations where they are operated and second configurations where they can be towed as trailers, as required by claims 2 and 4. Pet. 51–52 (Ex 1003 ¶¶ 104–107; Ex. 1005, 2:3–6, 4:33–35, 4:65–5:8, 8:12–14; Ex. 1006, 1:10–16, 1:49–50, 2:30–43, 3:47–55, 4:41–46, 5:11–16, Fig. 1).

Analysis

We find that, in view of the above, Petitioner has reasonably accounted for every element of claims 2 and 4 as taught or suggested by Forsyth, Haskins, and Blackman. As noted above, at this stage of the proceedings, Patent Owner has not substantively responded to Petitioner's arguments and evidence for obviousness.

Based on the preliminary record, we find Petitioner demonstrates a reasonable likelihood that it would prevail in showing that claims 2 and 4 of the '740 patent are unpatentable under Ground 1.

Samsung Exhibit 1012, Page 44 of 58
Samsung Electronics Co., Ltd. v. WIPQTUS, INC.
IPR2024-00023

Petitioner's Positions: Claim 6

Claim 6 depends from independent claim 1, discussed above. Claim 6 further requires "*the one or more storage modules includes two or more mobile storage modules stationed along one or more sides of the delivery module in the mobile storage module operational configurations*." Ex. 1001, 15:51–54. Petitioner argues that, as it would have been obvious to have one of Haskins's containers 9 alongside Forsyth's apparatus 2 to deliver granular material thereto, it would likewise have been obvious to use more than one of Haskins's containers. Pet. 54–58 (citing Ex. 1002 ¶¶ 109–115; Ex. 1005, 3:23–25, 4:33–35, 4:41–43, 5:12–18, Fig. 1; Ex. 1006, 1:15–16, Fig. 1). Petitioner argues "[c]ompared to only one bin, two bins reduce the time and labor required to reposition the truck to fill additional compartments on Forsyth's apparatus" and, "[a]s another benefit, the added bin allows for holding more granular material on the worksite than one bin alone." Pet. 57 (citing Ex. 1003 ¶ 112). Petitioner also argues "[t]he proposed combination involves mere duplication of Haskins' bin. 'It is well settled that the mere duplication of parts has no patentable significance unless a new and unexpected result is produced.' *In re Harza*, 274 F.2d 669, 671 (CCPA 1960)." Pet. 58.

Analysis

We find that, in view of the above, Petitioner has reasonably accounted for every element of claim 6 as taught or suggested by Forsyth, Haskins, and Blackman. We also find that Petitioner has set forth a rationale that is sufficiently persuasive at this stage of the proceeding for why it would have been obvious to use more than one of Haskins's containers in the allegedly obvious system described by Petitioner. As noted above, at this

Samsung Exhibit 1012, Page 45 of 58
Samsung Electronics Co., Ltd. v. WIPQTUS, INC.
IPR2024-00023

stage of the proceedings, Patent Owner has not substantively responded to Petitioner's arguments and evidence for obviousness.

Based on the preliminary record, we find Petitioner demonstrates a reasonable likelihood that it would prevail in showing that claim 6 of the '740 patent is unpatentable under Ground 1.

Petitioner's Positions: Claim 7

Claim 7 depends from independent claim 1 and further requires "*the one or more mobile storage modules includes two or more mobile storage modules which comprise interchangeable components*." Ex. 1001, 15:55–57. Petitioner argues claim 7 is like claim 6 and the addition of more of Haskins's storage bins would have been an obvious duplication of components. Pet. 58–59. Further, as claim 7 also requires "interchangeable components," Petitioner argues that identical Haskins storage bins would include interchangeable components because the components of one bin could be removed and used on the other. *Id.* at 59–61 (citing, *inter alia*, Ex. 1003 ¶¶ 116–119).

Analysis

We find that, in view of the above, Petitioner has reasonably accounted for every element of claim 7 as taught or suggested by Forsyth, Haskins, and Blackman. As noted above, at this stage of the proceedings, Patent Owner has not substantively responded to Petitioner's arguments and evidence for obviousness.

Based on the preliminary record, we find Petitioner demonstrates a reasonable likelihood that it would prevail in showing that claim 7 of the '740 patent is unpatentable under Ground 1.

Samsung Exhibit 1012, Page 46 of 58
Samsung Electronics Co., Ltd. v. WIPQTUS, INC.
IPR2024-00023

Petitioner's Positions: Claim 8

Claim 8 depends from claim 1 and further requires "*at least one of the delivery module and the one or more mobile storage modules comprises a chassis, the chassis reconfigurable between a semi-trailer chassis for transportation and a bearing surface for support against ground during operation*." Ex. 1001, 15:58–62. Petitioner argues Haskins's bin (the claimed mobile storage module) has framework 10, which is the claimed chassis as it is the structural support of the bin structure. Pet. 61–63 (citing Ex. 1003 ¶ 121; Ex. 1006, 2:32–40, 2:50–52, 3:58–60, Figs. 1, 2). Petitioner further argues that this structure of Haskins is reconfigurable between an orientation where the container 9 is horizontal and the framework 10 is to be hitched to and transported by a vehicle and an orientation where the framework 10 is a bearing surface against the ground when the container 9 is vertical and in operation. *Id.* at 64–65 (citing Ex. 1003 ¶¶ 123–125; Ex. 1006, 1:12–14, 1:26–28, 1:48–50, 2:30–36, 3:60–65, 4:41–43, 5:12–15, Figs. 1, 3). Petitioner argues framework 10 bares against the ground when it is drawn into a trench prepared for the structure on-site, as illustrated in Haskins's Figure 3. *Id.* at 64–65.

Analysis

We find that, in view of the above, Petitioner has reasonably accounted for every element of claim 8 as taught or suggested by Forsyth, Haskins, and Blackman. As noted above, at this stage of the proceedings, Patent Owner has not substantively responded to Petitioner's arguments and evidence for obviousness.

Samsung Exhibit 1012, Page 47 of 58
Samsung Electronics Co., Ltd. v. WIPQTUS, INC.
IPR2024-00023

Based on the preliminary record, we find Petitioner demonstrates a reasonable likelihood that it would prevail in showing that claim 8 of the '740 patent is unpatentable under Ground 1.

Petitioner's Positions: Claim 9

Claim 9 depends from claim 8, which depends from claim 1 as noted above, and further requires "*reconfiguration of the chassis comprises lowering of a front portion of the chassis to contact the ground*." Ex. 1001, 15:63–65. Petitioner argues that when the Haskins apparatus is configured for operation, i.e., its container 9 is upright and framework 10 is drawn into a trench in the ground, its wheels are in the trench and part of framework 10 sits on the ground. Pet. 65–66 (citing Ex. 1003 ¶ 126). Petitioner further argues Haskins discloses "'[w]hen the framework 10 has been released from the tractor (not shown) and the lower surfaces of the side members 10 and 11 are <u>resting on a flat ground surface</u>, the apparatus is ready to be erected for storage use.' [Ex. 1006], 4:41-43, FIG. 3 (emphasis added). Thus, when the 'lower surfaces of the side members 10 and 11 are resting on a flat ground surface,' *id.*, 4:41-43, at least a 'front portion' of the framework 10 (the claimed chassis) contacts the ground," as claimed. *Id.* at 66–67 (citing Ex. 1003 ¶ 128).

Analysis

We find that, in view of the above, Petitioner has reasonably accounted for every element of claim 9 as taught or suggested by Forsyth, Haskins, and Blackman. As noted above, at this stage of the proceedings, Patent Owner has not substantively responded to Petitioner's arguments and evidence for obviousness.

Samsung Exhibit 1012, Page 48 of 58
Samsung Electronics Co., Ltd. v. WIPQTUS, INC.
IPR2024-00023

Based on the preliminary record, we find Petitioner demonstrates a reasonable likelihood that it would prevail in showing that claim 9 of the '740 patent is unpatentable under Ground 1.

Petitioner's Positions: Claim 11

Claim 11 depends from independent claim 1 and further requires "*said granular material flows continuously downward from the input port to the output port, wherein each of the one or more mobile storage modules are reconfigurable between said mobile storage module operational configuration and a mobile storage module transportation configuration, said reconfiguring including said pivoting of the container portion between the lowered position and the raised position, and wherein reconfiguration of the mobile storage module from the transportation configuration to the operational configuration refrains from elevation of the output port*." Ex. 1001, 16:6–16. Petitioner argues that because, as shown in Haskins's Figure 9, its spout 21 is at the end of an inclined floor and below the chute 31 feeding granular material to the container 9, the granular material is taught to flow continuously downward from the input port, as claimed. Pet. 68 (citing Ex. 1003 ¶ 129, Ex. 1006, 2:54–69, 4:17–18, 4:71–72, Fig. 9).

Regarding the claim's requirement that the output port not be elevated when the module is reconfigured from transportation to operational configuration, Petitioner points to a publication of the U.S. Department of Transportation's Federal Highway Administration entitled "Federal Size Regulations for Commercial Motor Vehicles [("CMV's")] as evidence that when the Haskins container 9 is resting horizontally on the trailer framework 10, as a semi-trailer or fifth-wheel trailer, its spout 21 would be required to be "from 13 feet, 6 inches (4.11 meters) to 14 feed (4.27 meters)" high

Samsung Exhibit 1012, Page 49 of 58
Samsung Electronics Co., Ltd. v. WIPQTUS, INC.
IPR2024-00023

above road/ground height. *Id.* at 69 (citing Ex. 1010, 5; Ex. 1003 ¶ 131). Petitioner also argues that Haskins teaches that "[i]n the operational configuration, the 'spout … is 14 feet above the ground line'." *Id.* (citing Ex. 1006, 5:44–46).

Analysis

Petitioner's Exhibit 1010 states: "[t]here is no Federal vehicle *height* requirement for CMVs. Thus, States may set their own height restrictions. Most height limits range from 13 feet, 6 inches (4.11 meters) to 14 feet (4.27 meters), with exceptions granted for lower clearance on particular roads." Ex. 1010, 5. At least preliminarily, we are not persuaded by Petitioner's argument that just because U.S. or state regulations may limit the height of a road-going trailer to 14 feet, spout 21 of Haskins would likewise be 14 feet high when the container 9 is laid down horizontally on its framework 10. Haskins's Figure 1 (see above) illustrates its storage bin in a way that makes it appear that the spout 21 is elevated when the container 9 is raised to its vertical position. Although it is well established that patent drawings do not define precise proportions of the elements illustrated therein, we are not persuaded at this time by Petitioner's arguments about this claim element in view of Haskins's Figure 1, which shows the raised height of its spout 21 above the upper-most surface of its container 9 in its reclined position, and considering Petitioner's Exhibit 1010. *Cf. Hockerson-Halberstadt, Inc. v. Avia Group Intern., Inc.*, 222 F.3d 951, 956 (2000) ("well established that patent drawings do not define the precise proportions of the elements and may not be relied on to show particular sizes if the specification is completely silent on the issue").

Samsung Exhibit 1012, Page 50 of 58
Samsung Electronics Co., Ltd. v. WIPQTUS, INC.
IPR2024-00023

Based on the preliminary record, we do not find Petitioner demonstrates a reasonable likelihood that it would prevail in showing that claim 11 of the '740 patent is unpatentable under Ground 1.

Petitioner's Positions: Claim 12

Claim 12 depends from independent claim 1 and further requires "*the integrated actuating system comprises a hydraulic cylinder coupled at a first end to the frame and at a second end to the container portion at a location distal from the frame, thereby orienting the hydraulic cylinder at an angle away from horizontal in both the lowered position and the raised position of the container portion*." Ex. 1001, 16:17–23. Petitioner argues Haskins teaches a pair of hydraulic cylinder assemblies 44 that are pivotally connected to the container 9 and framework 10, as shown in Haskins's Figure 1. Pet. 70–71 (citing Ex. 1003 ¶¶ 133–134; Ex. 1006, 3:47–54). Petitioner argues this is the arrangement as claimed, with these cylinders being oriented at angles away from horizontal if either raised or lowered. *Id.*

Analysis

We find that, in view of the above, Petitioner has reasonably accounted for every element of claim 12 as taught or suggested by Forsyth, Haskins, and Blackman. As noted above, at this stage of the proceedings, Patent Owner has not substantively responded to Petitioner's arguments and evidence for obviousness.

Based on the preliminary record, we find Petitioner demonstrates a reasonable likelihood that it would prevail in showing that claim 12 of the '740 patent is unpatentable under Ground 1.

Samsung Exhibit 1012, Page 51 of 58
Samsung Electronics Co., Ltd. v. WIPQTUS, INC.
IPR2024-00023

Petitioner's Positions: Claims 13, 14, 16, 17, and 19

Claim 13 is an independent claim and claims 14, 16, and 17 depend therefrom, directly or indirectly. Ex. 1001, 16:24–63. Claim 13 is directed to a mobile storage module and a delivery module, as also recited by claim 1. *Id.* at 16:24–47. Petitioner notes that claim 13 does not add any further limitations or elements not included in claim 1, discussed above, and does not recite the detailed elements of the delivery module as does claim 1. *Compare id.* at 16:24–47, *with id.* at 14:62–15:32; *see* Pet. 71–72. Petitioner further argues claims 14, 16, and 17 are otherwise identical to claims 2, 8, and 9, discussed above. *Id.* at 72; *compare* Ex. 1001, 16:48–53, 16: 57–63, *with id.* at 15:33–39, 15:58–65.

Claim 19 is an independent claim with claim 20 depending therefrom. Ex. 1001 17:5–18:27. Claim 19 is a method claim, that method requiring *providing* a delivery module and a mobile storage module(s), as these structures are defined by claim 1. *Compare id.* at 17:5–18:15, *with id.* at 14:62–15:32. Petitioner makes this argument, also. Pet. 72.

Petitioner argues that the same evidence discussed above regarding claim 1 and its dependent claims teaches or suggests the elements of claims 12, 14, 16, 17, and 19. Pet. 71–72.

Analysis

At this stage of the proceeding, we agree with Petitioner's view of the similarities of claims 13, 14, 16, 17, and 19 to claims 1, 2, 8, and 9. We find that, in view of the above, Petitioner has reasonably accounted for every element of claims 13, 14, 16, 17, and 19 as taught or suggested by Forsyth, Haskins, and Blackman and has set forth sufficient rationale for combining these references. As noted above, at this stage of the proceedings, Patent

Samsung Exhibit 1012, Page 52 of 58
Samsung Electronics Co., Ltd. v. WIPQTUS, INC.
IPR2024-00023

Owner has not substantively responded to Petitioner's arguments and evidence for obviousness.

Based on the preliminary record, we find Petitioner demonstrates a reasonable likelihood that it would prevail in showing that claims 13, 14, 16, 17, and 19 of the '740 patent are unpatentable under Ground 1.

Petitioner's Positions: Claim 20

Claim 20 depends from independent claim 19, which we noted above is a method claim directed to providing the structures of claim 1; it further requires "*each of the one or more mobile storage modules are reconfigurable between a mobile storage module operational configuration and a mobile storage module transportation configuration, the one or more mobile storage modules towable as separately transportable trailers in the mobile storage module transportation configuration, the method further comprising: a. transporting the one or more mobile storage modules to positions adjacent to the delivery module in the mobile storage module transportation configuration; and b. reconfiguring the one or more mobile storage modules to the mobile storage module operational configurations*." Petitioner argues that these elements are similar to and essentially the same as those discussed above in relation to other claims (e.g., claims 1, 2, 4). Pet. 72–73.

Analysis

At this stage of the proceeding, we agree with Petitioner's view of the similarities of 20 to above-discussed claims, e.g., 1, 2, and 4, but requiring some action (transporting the transportable structure and reconfiguring the reconfigurable structure) with the structures otherwise defined by other claims. We find that, in view of the above, Petitioner has reasonably

Samsung Exhibit 1012, Page 53 of 58
Samsung Electronics Co., Ltd. v. WIPQTUS, INC.
IPR2024-00023

accounted for every element of claim 20 as taught or suggested by Forsyth, Haskins, and Blackman. As noted above, at this stage of the proceedings, Patent Owner has not substantively responded to Petitioner's arguments and evidence for obviousness.

Based on the preliminary record, we find Petitioner demonstrates a reasonable likelihood that it would prevail in showing that claim 20 of the '740 patent is unpatentable under Ground 1.

E. Ground 2 – Claims 10 and 18 Obviousness Over Forsyth, Haskins, Blackman, and Grotte

Claim 10 depends from claim 8, and thus, from independent claim 1, and further requires "*the chassis comprises a wheeled portion movable relative to a bearing surface portion between a first position and a second position, the wheeled portion configured to engage the ground in the first position for transportation, the wheeled portion configured to retract from the ground in the second position to facilitate engagement of the ground by the bearing surface portion*." Ex. 1001, 15:66–16:5.

Claim 18 depends from claim 16 and, thus, from independent claim 13. Similar to claim 10, claim 18 further requires "*the chassis comprises a wheeled portion movable relative to a bearing surface portion between a first position and a second position, the wheeled portion configured to engage the ground in the first position for transportation, the wheeled portion configured to retract from the ground in the second position to facilitate engagement of the ground by the bearing surface portion*." Ex. 1001, 16:64–17:4. As noted above, claim 16 is the same as or substantially similar to claim 8, and claim 13 recites the same elements as claim 1, minus those specially defining the delivery module.

Samsung Exhibit 1012, Page 54 of 58
Samsung Electronics Co., Ltd. v. WIPQTUS, INC.
IPR2024-00023

Petitioner's Positions

Petitioner notes that none of Forsyth, Haskins, or Blackman teaches the specific elements of claims 10 and 18, i.e., the retractable wheels to allow frame engagement with the ground. Pet. 73–74. Petitioner argues that "[a]lthough the Forsyth-Haskins-Blackman combination lacks the features of claims 10 and 18, Grotte discloses a system with a height-adjustable wheel assembly having the features. Additionally, it would have been obvious to combine Grotte with Forsyth/Haskins/Blackman with respect to the subject matter of claims 10 and 18." Pet. 74 (citing Ex. 1003, ¶ 140; Ex. 1008). Petitioner argues Grotte's apparatus is similar in many respects to Haskins's, incorporating a silo on a trailer that can lower and raise the silo by pivoting. *Id.* at 74–75 (citing Ex. 1008, 1:58–63, 3:24–37, 4:1–8, 6:25–29, 10:14–34, Fig. 1). Petitioner argues that Grotte's wheel assemblies, taught as having controllable movement with respect to the frame such that the wheels, can be retracted so the Grotte's frame, or Haskins's frame if Grotte's system were mounted thereto, would engage the ground. Pet. 76–77, 85–86 (citing Ex. 1003 ¶¶ 146–159; Ex. 1008, 3:24–37, 3:60–64, 4:1–33, 4:49–5:8, 10:14–34, Figs. 1, 2; Ex. 1006, 2:30–43, 3:40–57, 4:31–40, Figs. 1, 3). Petitioner argues that Grotte's movable wheel assembly would be combined with Haskins's storage bin by the skilled artisan because Grotte's and Haskins's apparatuses are so similar (both being trailer-based, wheeled container movers) and because Grotte's controllable wheel assemblies would make it unnecessary to provide a trench to use Haskins's storage bin, saving labor, time, and resources, and providing finer control when placing Haskins's bin. Pet. 77–83. Petitioner argues that such a modification to Haskins's device would involve only conventional parts and the substitution of one element

Samsung Exhibit 1012, Page 55 of 58
Samsung Electronics Co., Ltd. v. WIPQTUS, INC.
IPR2024-00023

for another similar one. Pet. 83–85. Petitioner argues that because the devices of Grotte and Haskins are used so similarly, e.g., bearing similar loads and being of similar sizes, such a modification would be expected to succeed. *Id.* at 83–86.

Analysis

We find that, in view of the above, Petitioner has reasonably accounted for every element of claims 10 and 18 as taught or suggested by Forsyth, Haskins, Blackman, and Grotte. Further, Petitioner's rationale for combining these references is also reasonable. Petitioner also has made a sufficient showing at this stage in the proceeding that an ordinary skilled artisan would have had a reasonable expectation of successfully combining Forsyth, Haskins, Blackman, and Grotte in the fashion proposed by Petitioner. As noted above, at this stage of the proceedings, Patent Owner has not substantively responded to Petitioner's arguments and evidence for obviousness.

Based on the preliminary record, we find Petitioner demonstrates a reasonable likelihood that it would prevail in showing that claims 10 and 18 of the '740 patent are unpatentable under Ground 2.

V. CONCLUSION

Petitioner demonstrates a reasonable likelihood of prevailing at trial in demonstrating that claims 1, 2, 4, 6–10, 12–14, and 16–20 of the '740 patent would have been obvious over the prior art combinations set forth in Grounds 1 and 2. Our decision at this stage derives from our review of the preliminary record before us. This decision does not reflect a final determination on the patentability of the claims.

Samsung Exhibit 1012, Page 56 of 58
Samsung Electronics Co., Ltd. v. WIPQTUS, INC.
IPR2024-00023

ORDER

Accordingly, it is hereby:

ORDERED that, Petitioner's Request for Reconsideration is *granted;*

FURTHER ORDERED that, pursuant to 35 U.S.C. § 314, an *inter partes* review of claims 1, 2, 4, 6–14, and 16–20 of the '740 patent, in accordance with Grounds 1 and 2 in the Petition, is hereby instituted; and

FURTHER ORDERED that, pursuant to 35 U.S.C. § 314(c) and 37 C.F.R. § 42.4(b), *inter partes* review of the '740 patent will commence on the entry date of this Order, and notice is hereby given of the institution of a trial.

Samsung Exhibit 1012, Page 57 of 58
Samsung Electronics Co., Ltd. v. WIPQTUS, INC.
IPR2024-00023

For PETITIONER:

James D. Stein
LEE & HAYES P.C.
James.stein@leehayes.com

Armon B. Shahdadi
Ben D. Bailey
Brannon C. McKay
Leonard J. Weinstein
CLAYTON, MCKAY & BAILEY, PC
armon@cmblaw.com
ben@cmblaw.com
brannon@cmblaw.com
leonard@cmblaw.com

For PATENT OWNER:

Anna Quinn
A. Justin Poplin
LATHROP GAGE LLP
AQuinn@lathropgage.com
JPoplin@lathropgage.com

Samsung Exhibit 1012, Page 58 of 58
Samsung Electronics Co., Ltd. v. WIPQTUS, INC.
IPR2024-00023