UNITED STATES PATENT AND TRADEMARK OFFICE

UNITED STATES DEPARTMENT OF COMMERCE
United States Patent and Trademark Office
Address: COMMISSIONER FOR PATENTS
P.O. Box 1450
Alexandria, Virginia 22313-1450
www.uspto.gov

APPLICATION NO.	ISSUE DATE	PATENT NO.	ATTORNEY DOCKET NO.	CONFIRMATION NO.
12/424,320	03/19/2013	8400358	AND01 082 CONT	1334

79172 7590 02/27/2013

Duane Morris LLP
505 9th Street, N.W.
Suite 1000
Washington, DC 20004

ISSUE NOTIFICATION

The projected patent number and issue date are specified above.

Determination of Patent Term Adjustment under 35 U.S.C. 154 (b)
(application filed on or after May 29, 2000)

The Patent Term Adjustment is 686 day(s). Any patent to issue from the above-identified application will include an indication of the adjustment on the front page.

If a Continued Prosecution Application (CPA) was filed in the above-identified application, the filing date that determines Patent Term Adjustment is the filing date of the most recent CPA.

Applicant will be able to obtain more detailed information by accessing the Patent Application Information Retrieval (PAIR) WEB site (http://pair.uspto.gov).

Any questions regarding the Patent Term Extension or Adjustment determination should be directed to the Office of Patent Legal Administration at (571)-272-7702. Questions relating to issue and publication fee payments should be directed to the Application Assistance Unit (AAU) of the Office of Data Management (ODM) at (571)-272-4200.

APPLICANT(s) (Please see PAIR WEB site http://pair.uspto.gov for additional applicants):

Martin Alles, Vienna, VA;
John Carlson, Dulles, VA;
George Maher, Herndon, VA;
Selcuk Mazlum, Leesburg, VA;

The United States represents the largest, most dynamic marketplace in the world and is an unparalleled location for business investment, innovation, and commercialization of new technologies. The USA offers tremendous resources and advantages for those who invest and manufacture goods here. Through SelectUSA, our nation works to encourage and facilitate business investment. To learn more about why the USA is the best country in the world to develop technology, manufacture products, and grow your business, visit SelectUSA.gov.

GEOSCOPE EXHIBIT 2021
Apple v. Geoscope, IPR2024-00032

PTO/SB/08a (05-07)
Approved for use through 09/30/2007. OMB 0651-0031
U.S. Patent and Trademark Office; U.S. DEPARTMENT OF COMMERCE
Under the Paperwork Reduction Act of 1995, no persons are required to respond to a collection of information unless it contains a valid OMB control number.

INFORMATION DISCLOSURE STATEMENT BY APPLICANT

(Not for submission under 37 CFR 1.99)

Application Number	12424320
Filing Date	2009-04-15
First Named Inventor	ALLES et al.
Art Unit	3662
Examiner Name	PHAN, DAO LINDA
Attorney Docket Number	AND01 082 CONT

U.S.PATENTS

Change(s) applied to document. N.A./ 2/7/2013

Examiner Initial*	Cite No	Patent Number	Kind Code[1]	Issue Date	Name of Patentee or Applicant of cited Document	Pages,Columns,Lines where Relevant Passages or Relevant Figures Appear
	1	7593738	B2	2009-09-22	Anderson	
	2	7440762	B2	~~2005-07-07~~ 10/2008	Maloney et al.	
	3	7427952	B2	~~2006-11-23~~ 09/2008	Bull et al.	
	4	7340259	B2	2008-03-04	Maloney	
	5	7271765	B2	~~2005-09-22~~ 09/2007	Stilp et al.	
	6	7167713	B2	2007-01-23	Anderson	
	7	7023383	B2	2006-04-04	Stilp et al.	
	8	6996392	B2	2006-02-07	Anderson	

 ALL REFERENCES CONSIDERED EXCEPT WHERE LINED THROUGH. /D.P./

PTO/SB/08a (05-07)
Approved for use through 09/30/2007. OMB 0651-0031
U.S. Patent and Trademark Office; U.S. DEPARTMENT OF COMMERCE
Under the Paperwork Reduction Act of 1995, no persons are required to respond to a collection of information unless it contains a valid OMB control number.

INFORMATION DISCLOSURE STATEMENT BY APPLICANT

(Not for submission under 37 CFR 1.99)

Application Number	12424320
Filing Date	2009-04-15
First Named Inventor	ALLES et al.
Art Unit	3662
Examiner Name	PHAN, DAO LINDA
Attorney Docket Number	AND01 082 CONT

U.S.PATENTS

Examiner Initial*	Cite No	Patent Number	Kind Code[1]	Issue Date	Name of Patentee or Applicant of cited Document	Pages,Columns,Lines where Relevant Passages or Relevant Figures Appear
	1					

If you wish to add additional U.S. Patent citation information please click the Add button.

U.S.PATENT APPLICATION PUBLICATIONS

Examiner Initial*	Cite No	Publication Number	Kind Code[1]	Publication Date	Name of Patentee or Applicant of cited Document	Pages,Columns,Lines where Relevant Passages or Relevant Figures Appear
	1	20080161015	A1	2008-~~01-02~~ 04	Maloney, et al.	
	2	20020172223	A1	2002-11-21	Stilp, et al.	
	3	20080132247	A1	2008-06-05	Anderson, et al.	
	4	20080132244	A1	2008-06-05	Anderson, et al.	
	5	20080158059	A1	2008-07-03	Bull, et al.	

Change(s) applied to document,
/N.A./
2/7/2013

 ALL REFERENCES CONSIDERED EXCEPT WHERE LINED THROUGH. /D.P./

UNITED STATES PATENT AND TRADEMARK OFFICE

UNITED STATES DEPARTMENT OF COMMERCE
United States Patent and Trademark Office
Address: COMMISSIONER FOR PATENTS
P.O. Box 1450
Alexandria, Virginia 22313-1450
www.uspto.gov

APPLICATION NO.	FILING DATE	FIRST NAMED INVENTOR	ATTORNEY DOCKET NO.	CONFIRMATION NO.
12/424,320	04/15/2009	Martin Alles	AND01 082 CONT	1334

79172 7590 02/01/2013
Duane Morris LLP
505 9th Street, N.W.
Suite 1000
Washington, DC 20004

EXAMINER
PHAN, DAO LINDA

ART UNIT	PAPER NUMBER
3646	

MAIL DATE	DELIVERY MODE
02/01/2013	PAPER

Please find below and/or attached an Office communication concerning this application or proceeding.

The time period for reply, if any, is set in the attached communication.

Corrected Notice of Allowability	Application No. 12/424,320	Applicant(s) ALLES ET AL.	
	Examiner Dao Phan	Art Unit 3646	

-- The MAILING DATE of this communication appears on the cover sheet with the correspondence address--

All claims being allowable, PROSECUTION ON THE MERITS IS (OR REMAINS) CLOSED in this application. If not included herewith (or previously mailed), a Notice of Allowance (PTOL-85) or other appropriate communication will be mailed in due course. **THIS NOTICE OF ALLOWABILITY IS NOT A GRANT OF PATENT RIGHTS.** This application is subject to withdrawal from issue at the initiative of the Office or upon petition by the applicant. See 37 CFR 1.313 and MPEP 1308.

1. ☒ This communication is responsive to *10/12/2012*.

2. ☐ An election was made by the applicant in response to a restriction requirement set forth during the interview on _____; the restriction requirement and election have been incorporated into this action.

3. ☒ The allowed claim(s) is/are *1-52*. As a result of the allowed claim(s), you may be eligible to benefit from the **Patent Prosecution Highway** program at a participating intellectual property office for the corresponding application. For more information, please see http://www.uspto.gov/patents/init_events/pph/index.jsp or send an inquiry to PPHfeedback@uspto.gov .

4. ☐ Acknowledgment is made of a claim for foreign priority under 35 U.S.C. § 119(a)-(d) or (f).
   a) ☐ All b) ☐ Some* c) ☐ None of the:
      1. ☐ Certified copies of the priority documents have been received.
      2. ☐ Certified copies of the priority documents have been received in Application No. _____ .
      3. ☐ Copies of the certified copies of the priority documents have been received in this national stage application from the International Bureau (PCT Rule 17.2(a)).

   * Certified copies not received: _____.

Applicant has THREE MONTHS FROM THE "MAILING DATE" of this communication to file a reply complying with the requirements noted below. Failure to timely comply will result in ABANDONMENT of this application.
THIS THREE-MONTH PERIOD IS NOT EXTENDABLE.

5. ☐ CORRECTED DRAWINGS (as "replacement sheets") must be submitted.

   ☐ including changes required by the attached Examiner's Amendment / Comment or in the Office action of Paper No./Mail Date _____.

   Identifying indicia such as the application number (see 37 CFR 1.84(c)) should be written on the drawings in the front (not the back) of each sheet. Replacement sheet(s) should be labeled as such in the header according to 37 CFR 1.121(d).

6. ☐ DEPOSIT OF and/or INFORMATION about the deposit of BIOLOGICAL MATERIAL must be submitted. Note the attached Examiner's comment regarding REQUIREMENT FOR THE DEPOSIT OF BIOLOGICAL MATERIAL.

Attachment(s)

1. ☐ Notice of References Cited (PTO-892)
2. ☐ Information Disclosure Statements (PTO/SB/08), Paper No./Mail Date _____
3. ☐ Examiner's Comment Regarding Requirement for Deposit of Biological Material
4. ☐ Interview Summary (PTO-413), Paper No./Mail Date _____ .
5. ☒ Examiner's Amendment/Comment
6. ☐ Examiner's Statement of Reasons for Allowance
7. ☐ Other _____.

/Dao Phan/
Primary Examiner, Art Unit 3646

1) An examiner's amendment to the record appears below. Should the changes and/or additions be unacceptable to applicant, an amendment may be filed as provided by 37 CFR 1.312. To ensure consideration of such an amendment, it MUST be submitted no later than the payment of the issue fee.

To obviate further prosecution, and to place the claim in proper form, the end of claim 50 has been amended as follows:

At the end of claim 50, " , " has been changed to -- . --.

2) Any inquiry concerning this communication or earlier communications from the examiner should be directed to Dao Phan whose telephone number is (571)272-6976. The examiner can normally be reached on M-F 9:00-5:30.

If attempts to reach the examiner by telephone are unsuccessful, the examiner's supervisor, Jack Keith can be reached on (571)272-6878. The fax phone number for the organization where this application or proceeding is assigned is 571-273-8300.

Information regarding the status of an application may be obtained from the Patent Application Information Retrieval (PAIR) system. Status information for published applications may be obtained from either Private PAIR or Public PAIR. Status information for unpublished applications is available through Private PAIR only. For more information about the PAIR system, see http://pair-direct.uspto.gov. Should you have questions on access to the Private PAIR system, contact the Electronic Business Center (EBC) at 866-217-9197 (toll-free). If you would like assistance from a USPTO Customer Service Representative or access to the automated information system, call 800-786-9199 (IN USA OR CANADA) or 571-272-1000.

/Dao Phan/
Primary Examiner, Art Unit 3646

PART B - FEE(S) TRANSMITTAL

Complete and send this form, together with applicable fee(s), to: Mail **Mail Stop ISSUE FEE**
Commissioner for Patents
P.O. Box 1450
Alexandria, Virginia 22313-1450
or Fax (571)-273-2885

INSTRUCTIONS: This form should be used for transmitting the ISSUE FEE and PUBLICATION FEE (if required). Blocks 1 through 5 should be completed where appropriate. All further correspondence including the Patent, advance orders and notification of maintenance fees will be mailed to the current correspondence address as indicated unless corrected below or directed otherwise in Block 1, by (a) specifying a new correspondence address; and/or (b) indicating a separate "FEE ADDRESS" for maintenance fee notifications.

CURRENT CORRESPONDENCE ADDRESS (Note: Use Block 1 for any change of address)

79172 7590 01/10/2013
Duane Morris LLP
505 9th Street, N.W.
Suite 1000
Washington, DC 20004

Note: A certificate of mailing can only be used for domestic mailings of the Fee(s) Transmittal. This certificate cannot be used for any other accompanying papers. Each additional paper, such as an assignment or formal drawing, must have its own certificate of mailing or transmission.

Certificate of Mailing or Transmission

I hereby certify that this Fee(s) Transmittal is being deposited with the United States Postal Service with sufficient postage for first class mail in an envelope addressed to the Mail Stop ISSUE FEE address above, or being facsimile transmitted to the USPTO (571) 273-2885, on the date indicated below.

(Depositor's name)
(Signature)
(Date)

APPLICATION NO.	FILING DATE	FIRST NAMED INVENTOR	ATTORNEY DOCKET NO.	CONFIRMATION NO.
12/424,320	04/15/2009	Martin Alles	AND01 082 CONT	1334

TITLE OF INVENTION: METHOD TO MODIFY CALIBRATION DATA USED TO LOCATE A MOBILE UNIT

APPLN. TYPE	SMALL ENTITY	ISSUE FEE DUE	PUBLICATION FEE DUE	PREV. PAID ISSUE FEE	TOTAL FEE(S) DUE	DATE DUE
nonprovisional	NO	$1770	$300	$0	$2070	04/10/2013

EXAMINER	ART UNIT	CLASS-SUBCLASS
PHAN, DAO LINDA	3646	342-451000

1. Change of correspondence address or indication of "Fee Address" (37 CFR 1.363).
- ☐ Change of correspondence address (or Change of Correspondence Address form PTO/SB/122) attached.
- ☐ "Fee Address" indication (or "Fee Address" Indication form PTO/SB/47; Rev 03-02 or more recent) attached. **Use of a Customer Number is required.**

2. For printing on the patent front page, list
(1) the names of up to 3 registered patent attorneys or agents OR, alternatively,
(2) the name of a single firm (having as a member a registered attorney or agent) and the names of up to 2 registered patent attorneys or agents. If no name is listed, no name will be printed.

1 Duane Morris LLP
2
3

3. ASSIGNEE NAME AND RESIDENCE DATA TO BE PRINTED ON THE PATENT (print or type)

PLEASE NOTE: Unless an assignee is identified below, no assignee data will appear on the patent. If an assignee is identified below, the document has been filed for recordation as set forth in 37 CFR 3.11. Completion of this form is NOT a substitute for filing an assignment.

(A) NAME OF ASSIGNEE: Andrew LLC

(B) RESIDENCE: (CITY and STATE OR COUNTRY): Hickory, North Carolina

Please check the appropriate assignee category or categories (will not be printed on the patent) : ☐ Individual ☒ Corporation or other private group entity ☐ Government

4a. The following fee(s) are submitted:
- ☒ Issue Fee
- ☒ Publication Fee (No small entity discount permitted)
- ☐ Advance Order - # of Copies _____

4b. Payment of Fee(s): (**Please first reapply any previously paid issue fee shown above**)
- ☐ A check is enclosed.
- ☐ Payment by credit card. Form PTO-2038 is attached.
- ☒ The Director is hereby authorized to charge the required fee(s), any deficiency, or credit any overpayment, to Deposit Account Number 04-1679 (enclose an extra copy of this form).

5. **Change in Entity Status** (from status indicated above)
- ☐ a. Applicant claims SMALL ENTITY status. See 37 CFR 1.27.
- ☐ b. Applicant is no longer claiming SMALL ENTITY status. See 37 CFR 1.27(g)(2).

NOTE: The Issue Fee and Publication Fee (if required) will not be accepted from anyone other than the applicant; a registered attorney or agent; or the assignee or other party in interest as shown by the records of the United States Patent and Trademark Office.

Authorized Signature /Mark C. Comtois/ Date 18 January 2013

Typed or printed name Mark C. Comtois Registration No. 46,285

This collection of information is required by 37 CFR 1.311. The information is required to obtain or retain a benefit by the public which is to file (and by the USPTO to process) an application. Confidentiality is governed by 35 U.S.C. 122 and 37 CFR 1.14. This collection is estimated to take 12 minutes to complete, including gathering, preparing, and submitting the completed application form to the USPTO. Time will vary depending upon the individual case. Any comments on the amount of time you require to complete this form and/or suggestions for reducing this burden, should be sent to the Chief Information Officer, U.S. Patent and Trademark Office, U.S. Department of Commerce, P.O. Box 1450, Alexandria, Virginia 22313-1450. DO NOT SEND FEES OR COMPLETED FORMS TO THIS ADDRESS. SEND TO: Commissioner for Patents, P.O. Box 1450, Alexandria, Virginia 22313-1450.

Under the Paperwork Reduction Act of 1995, no persons are required to respond to a collection of information unless it displays a valid OMB control number.

Electronic Patent Application Fee Transmittal

Application Number:	12424320
Filing Date:	15-Apr-2009
Title of Invention:	METHOD TO MODIFY CALIBRATION DATA USED TO LOCATE A MOBILE UNIT
First Named Inventor/Applicant Name:	Martin Alles
Filer:	Mark Charles Comtois/laureen ponder
Attorney Docket Number:	AND01 082 CONT

Filed as Large Entity

Utility under 35 USC 111(a) Filing Fees

Description	Fee Code	Quantity	Amount	Sub-Total in USD($)
Basic Filing:				
Pages:				
Claims:				
Miscellaneous-Filing:				
Petition:				
Patent-Appeals-and-Interference:				
Post-Allowance-and-Post-Issuance:				
Utility Appl issue fee	1501	1	1770	1770
Publ. Fee- early, voluntary, or normal	1504	1	300	300

Description	Fee Code	Quantity	Amount	Sub-Total in USD($)
Extension-of-Time:				
Miscellaneous:				
			Total in USD ($)	**2070**

Electronic Acknowledgement Receipt

EFS ID:	14736361
Application Number:	12424320
International Application Number:	
Confirmation Number:	1334
Title of Invention:	METHOD TO MODIFY CALIBRATION DATA USED TO LOCATE A MOBILE UNIT
First Named Inventor/Applicant Name:	Martin Alles
Customer Number:	79172
Filer:	Mark Charles Comtois/laureen ponder
Filer Authorized By:	Mark Charles Comtois
Attorney Docket Number:	AND01 082 CONT
Receipt Date:	18-JAN-2013
Filing Date:	15-APR-2009
Time Stamp:	12:47:34
Application Type:	Utility under 35 USC 111(a)

Payment information:

Submitted with Payment	yes
Payment Type	Deposit Account
Payment was successfully received in RAM	$2070
RAM confirmation Number	10749
Deposit Account	041679
Authorized User	

The Director of the USPTO is hereby authorized to charge indicated fees and credit any overpayment as follows:

Charge any Additional Fees required under 37 C.F.R. Section 1.21 (Miscellaneous fees and charges)

File Listing:

Document Number	Document Description	File Name	File Size(Bytes)/ Message Digest	Multi Part /.zip	Pages (if appl.)
1	Issue Fee Payment (PTO-85B)	12424320IF.pdf	96289 7646fa74afca0f0aba0c8215fa373df95eddc1e0	no	1
Warnings:					
Information:					
2	Fee Worksheet (SB06)	fee-info.pdf	31844 2957ed6a94227c971af7154a7705e51c0691246e	no	2
Warnings:					
Information:					
			Total Files Size (in bytes):	128133	

This Acknowledgement Receipt evidences receipt on the noted date by the USPTO of the indicated documents, characterized by the applicant, and including page counts, where applicable. It serves as evidence of receipt similar to a Post Card, as described in MPEP 503.

New Applications Under 35 U.S.C. 111
If a new application is being filed and the application includes the necessary components for a filing date (see 37 CFR 1.53(b)-(d) and MPEP 506), a Filing Receipt (37 CFR 1.54) will be issued in due course and the date shown on this Acknowledgement Receipt will establish the filing date of the application.

National Stage of an International Application under 35 U.S.C. 371
If a timely submission to enter the national stage of an international application is compliant with the conditions of 35 U.S.C. 371 and other applicable requirements a Form PCT/DO/EO/903 indicating acceptance of the application as a national stage submission under 35 U.S.C. 371 will be issued in addition to the Filing Receipt, in due course.

New International Application Filed with the USPTO as a Receiving Office
If a new international application is being filed and the international application includes the necessary components for an international filing date (see PCT Article 11 and MPEP 1810), a Notification of the International Application Number and of the International Filing Date (Form PCT/RO/105) will be issued in due course, subject to prescriptions concerning national security, and the date shown on this Acknowledgement Receipt will establish the international filing date of the application.

UNITED STATES PATENT AND TRADEMARK OFFICE

UNITED STATES DEPARTMENT OF COMMERCE
United States Patent and Trademark Office
Address: COMMISSIONER FOR PATENTS
P.O. Box 1450
Alexandria, Virginia 22313-1450
www.uspto.gov

NOTICE OF ALLOWANCE AND FEE(S) DUE

79172 7590 01/10/2013
Duane Morris LLP
505 9th Street, N.W.
Suite 1000
Washington, DC 20004

EXAMINER
PHAN, DAO LINDA

ART UNIT	PAPER NUMBER
3646	

DATE MAILED: 01/10/2013

APPLICATION NO.	FILING DATE	FIRST NAMED INVENTOR	ATTORNEY DOCKET NO.	CONFIRMATION NO.
12/424,320	04/15/2009	Martin Alles	AND01 082 CONT	1334

TITLE OF INVENTION: METHOD TO MODIFY CALIBRATION DATA USED TO LOCATE A MOBILE UNIT

APPLN. TYPE	SMALL ENTITY	ISSUE FEE DUE	PUBLICATION FEE DUE	PREV. PAID ISSUE FEE	TOTAL FEE(S) DUE	DATE DUE
nonprovisional	NO	$1770	$300	$0	$2070	04/10/2013

THE APPLICATION IDENTIFIED ABOVE HAS BEEN EXAMINED AND IS ALLOWED FOR ISSUANCE AS A PATENT. PROSECUTION ON THE MERITS IS CLOSED. THIS NOTICE OF ALLOWANCE IS NOT A GRANT OF PATENT RIGHTS. THIS APPLICATION IS SUBJECT TO WITHDRAWAL FROM ISSUE AT THE INITIATIVE OF THE OFFICE OR UPON PETITION BY THE APPLICANT. SEE 37 CFR 1.313 AND MPEP 1308.

THE ISSUE FEE AND PUBLICATION FEE (IF REQUIRED) MUST BE PAID WITHIN THREE MONTHS FROM THE MAILING DATE OF THIS NOTICE OR THIS APPLICATION SHALL BE REGARDED AS ABANDONED. THIS STATUTORY PERIOD CANNOT BE EXTENDED. SEE 35 U.S.C. 151. THE ISSUE FEE DUE INDICATED ABOVE DOES NOT REFLECT A CREDIT FOR ANY PREVIOUSLY PAID ISSUE FEE IN THIS APPLICATION. IF AN ISSUE FEE HAS PREVIOUSLY BEEN PAID IN THIS APPLICATION (AS SHOWN ABOVE), THE RETURN OF PART B OF THIS FORM WILL BE CONSIDERED A REQUEST TO REAPPLY THE PREVIOUSLY PAID ISSUE FEE TOWARD THE ISSUE FEE NOW DUE.

HOW TO REPLY TO THIS NOTICE:

I. Review the SMALL ENTITY status shown above.

If the SMALL ENTITY is shown as YES, verify your current SMALL ENTITY status:

A. If the status is the same, pay the TOTAL FEE(S) DUE shown above.

B. If the status above is to be removed, check box 5b on Part B - Fee(s) Transmittal and pay the PUBLICATION FEE (if required) and twice the amount of the ISSUE FEE shown above, or

If the SMALL ENTITY is shown as NO:

A. Pay TOTAL FEE(S) DUE shown above, or

B. If applicant claimed SMALL ENTITY status before, or is now claiming SMALL ENTITY status, check box 5a on Part B - Fee(s) Transmittal and pay the PUBLICATION FEE (if required) and 1/2 the ISSUE FEE shown above.

II. PART B - FEE(S) TRANSMITTAL, or its equivalent, must be completed and returned to the United States Patent and Trademark Office (USPTO) with your ISSUE FEE and PUBLICATION FEE (if required). If you are charging the fee(s) to your deposit account, section "4b" of Part B - Fee(s) Transmittal should be completed and an extra copy of the form should be submitted. If an equivalent of Part B is filed, a request to reapply a previously paid issue fee must be clearly made, and delays in processing may occur due to the difficulty in recognizing the paper as an equivalent of Part B.

III. All communications regarding this application must give the application number. Please direct all communications prior to issuance to Mail Stop ISSUE FEE unless advised to the contrary.

IMPORTANT REMINDER: Utility patents issuing on applications filed on or after Dec. 12, 1980 may require payment of maintenance fees. It is patentee's responsibility to ensure timely payment of maintenance fees when due.

013
PTOL-85 (Rev. 02/11)

PART B - FEE(S) TRANSMITTAL

Complete and send this form, together with applicable fee(s), to: Mail **Mail Stop ISSUE FEE**
Commissioner for Patents
P.O. Box 1450
Alexandria, Virginia 22313-1450
or Fax (571)-273-2885

INSTRUCTIONS: This form should be used for transmitting the ISSUE FEE and PUBLICATION FEE (if required). Blocks 1 through 5 should be completed where appropriate. All further correspondence including the Patent, advance orders and notification of maintenance fees will be mailed to the current correspondence address as indicated unless corrected below or directed otherwise in Block 1, by (a) specifying a new correspondence address; and/or (b) indicating a separate "FEE ADDRESS" for maintenance fee notifications.

CURRENT CORRESPONDENCE ADDRESS (Note: Use Block 1 for any change of address)

79172 7590 01/10/2013
Duane Morris LLP
505 9th Street, N.W.
Suite 1000
Washington, DC 20004

Note: A certificate of mailing can only be used for domestic mailings of the Fee(s) Transmittal. This certificate cannot be used for any other accompanying papers. Each additional paper, such as an assignment or formal drawing, must have its own certificate of mailing or transmission.

Certificate of Mailing or Transmission

I hereby certify that this Fee(s) Transmittal is being deposited with the United States Postal Service with sufficient postage for first class mail in an envelope addressed to the Mail Stop ISSUE FEE address above, or being facsimile transmitted to the USPTO (571) 273-2885, on the date indicated below.

(Depositor's name)
(Signature)
(Date)

APPLICATION NO.	FILING DATE	FIRST NAMED INVENTOR	ATTORNEY DOCKET NO.	CONFIRMATION NO.
12/424,320	04/15/2009	Martin Alles	AND01 082 CONT	1334

TITLE OF INVENTION: METHOD TO MODIFY CALIBRATION DATA USED TO LOCATE A MOBILE UNIT

APPLN. TYPE	SMALL ENTITY	ISSUE FEE DUE	PUBLICATION FEE DUE	PREV. PAID ISSUE FEE	TOTAL FEE(S) DUE	DATE DUE
nonprovisional	NO	$1770	$300	$0	$2070	04/10/2013

EXAMINER	ART UNIT	CLASS-SUBCLASS
PHAN, DAO LINDA	3646	342-451000

1. Change of correspondence address or indication of "Fee Address" (37 CFR 1.363).
- ❑ Change of correspondence address (or Change of Correspondence Address form PTO/SB/122) attached.
- ❑ "Fee Address" indication (or "Fee Address" Indication form PTO/SB/47; Rev 03-02 or more recent) attached. **Use of a Customer Number is required.**

2. For printing on the patent front page, list
(1) the names of up to 3 registered patent attorneys or agents OR, alternatively,
(2) the name of a single firm (having as a member a registered attorney or agent) and the names of up to 2 registered patent attorneys or agents. If no name is listed, no name will be printed.

1_____
2_____
3_____

3. ASSIGNEE NAME AND RESIDENCE DATA TO BE PRINTED ON THE PATENT (print or type)

PLEASE NOTE: Unless an assignee is identified below, no assignee data will appear on the patent. If an assignee is identified below, the document has been filed for recordation as set forth in 37 CFR 3.11. Completion of this form is NOT a substitute for filing an assignment.

(A) NAME OF ASSIGNEE (B) RESIDENCE: (CITY and STATE OR COUNTRY)

Please check the appropriate assignee category or categories (will not be printed on the patent) : ❑ Individual ❑ Corporation or other private group entity ❑ Government

4a. The following fee(s) are submitted:
- ❑ Issue Fee
- ❑ Publication Fee (No small entity discount permitted)
- ❑ Advance Order - # of Copies _____

4b. Payment of Fee(s): (**Please first reapply any previously paid issue fee shown above**)
- ❑ A check is enclosed.
- ❑ Payment by credit card. Form PTO-2038 is attached.
- ❑ The Director is hereby authorized to charge the required fee(s), any deficiency, or credit any overpayment, to Deposit Account Number _____ (enclose an extra copy of this form).

5. **Change in Entity Status** (from status indicated above)
- ❑ a. Applicant claims SMALL ENTITY status. See 37 CFR 1.27.
- ❑ b. Applicant is no longer claiming SMALL ENTITY status. See 37 CFR 1.27(g)(2).

NOTE: The Issue Fee and Publication Fee (if required) will not be accepted from anyone other than the applicant; a registered attorney or agent; or the assignee or other party in interest as shown by the records of the United States Patent and Trademark Office.

Authorized Signature _____ Date _____

Typed or printed name _____ Registration No. _____

This collection of information is required by 37 CFR 1.311. The information is required to obtain or retain a benefit by the public which is to file (and by the USPTO to process) an application. Confidentiality is governed by 35 U.S.C. 122 and 37 CFR 1.14. This collection is estimated to take 12 minutes to complete, including gathering, preparing, and submitting the completed application form to the USPTO. Time will vary depending upon the individual case. Any comments on the amount of time you require to complete this form and/or suggestions for reducing this burden, should be sent to the Chief Information Officer, U.S. Patent and Trademark Office, U.S. Department of Commerce, P.O. Box 1450, Alexandria, Virginia 22313-1450. DO NOT SEND FEES OR COMPLETED FORMS TO THIS ADDRESS. SEND TO: Commissioner for Patents, P.O. Box 1450, Alexandria, Virginia 22313-1450.

Under the Paperwork Reduction Act of 1995, no persons are required to respond to a collection of information unless it displays a valid OMB control number.

UNITED STATES PATENT AND TRADEMARK OFFICE

UNITED STATES DEPARTMENT OF COMMERCE
United States Patent and Trademark Office
Address: COMMISSIONER FOR PATENTS
P.O. Box 1450
Alexandria, Virginia 22313-1450
www.uspto.gov

APPLICATION NO.	FILING DATE	FIRST NAMED INVENTOR	ATTORNEY DOCKET NO.	CONFIRMATION NO.
12/424,320	04/15/2009	Martin Alles	AND01 082 CONT	1334

79172 7590 01/10/2013
Duane Morris LLP
505 9th Street, N.W.
Suite 1000
Washington, DC 20004

EXAMINER
PHAN, DAO LINDA

ART UNIT	PAPER NUMBER
3646	

DATE MAILED: 01/10/2013

Determination of Patent Term Adjustment under 35 U.S.C. 154 (b)
(application filed on or after May 29, 2000)

The Patent Term Adjustment to date is 348 day(s). If the issue fee is paid on the date that is three months after the mailing date of this notice and the patent issues on the Tuesday before the date that is 28 weeks (six and a half months) after the mailing date of this notice, the Patent Term Adjustment will be 348 day(s).

If a Continued Prosecution Application (CPA) was filed in the above-identified application, the filing date that determines Patent Term Adjustment is the filing date of the most recent CPA.

Applicant will be able to obtain more detailed information by accessing the Patent Application Information Retrieval (PAIR) WEB site (http://pair.uspto.gov).

Any questions regarding the Patent Term Extension or Adjustment determination should be directed to the Office of Patent Legal Administration at (571)-272-7702. Questions relating to issue and publication fee payments should be directed to the Customer Service Center of the Office of Patent Publication at 1-(888)-786-0101 or (571)-272-4200.

Privacy Act Statement

The Privacy Act of 1974 (P.L. 93-579) requires that you be given certain information in connection with your submission of the attached form related to a patent application or patent. Accordingly, pursuant to the requirements of the Act, please be advised that: (1) the general authority for the collection of this information is 35 U.S.C. 2(b)(2); (2) furnishing of the information solicited is voluntary; and (3) the principal purpose for which the information is used by the U.S. Patent and Trademark Office is to process and/or examine your submission related to a patent application or patent. If you do not furnish the requested information, the U.S. Patent and Trademark Office may not be able to process and/or examine your submission, which may result in termination of proceedings or abandonment of the application or expiration of the patent.

The information provided by you in this form will be subject to the following routine uses:

1. The information on this form will be treated confidentially to the extent allowed under the Freedom of Information Act (5 U.S.C. 552) and the Privacy Act (5 U.S.C 552a). Records from this system of records may be disclosed to the Department of Justice to determine whether disclosure of these records is required by the Freedom of Information Act.
2. A record from this system of records may be disclosed, as a routine use, in the course of presenting evidence to a court, magistrate, or administrative tribunal, including disclosures to opposing counsel in the course of settlement negotiations.
3. A record in this system of records may be disclosed, as a routine use, to a Member of Congress submitting a request involving an individual, to whom the record pertains, when the individual has requested assistance from the Member with respect to the subject matter of the record.
4. A record in this system of records may be disclosed, as a routine use, to a contractor of the Agency having need for the information in order to perform a contract. Recipients of information shall be required to comply with the requirements of the Privacy Act of 1974, as amended, pursuant to 5 U.S.C. 552a(m).
5. A record related to an International Application filed under the Patent Cooperation Treaty in this system of records may be disclosed, as a routine use, to the International Bureau of the World Intellectual Property Organization, pursuant to the Patent Cooperation Treaty.
6. A record in this system of records may be disclosed, as a routine use, to another federal agency for purposes of National Security review (35 U.S.C. 181) and for review pursuant to the Atomic Energy Act (42 U.S.C. 218(c)).
7. A record from this system of records may be disclosed, as a routine use, to the Administrator, General Services, or his/her designee, during an inspection of records conducted by GSA as part of that agency's responsibility to recommend improvements in records management practices and programs, under authority of 44 U.S.C. 2904 and 2906. Such disclosure shall be made in accordance with the GSA regulations governing inspection of records for this purpose, and any other relevant (i.e., GSA or Commerce) directive. Such disclosure shall not be used to make determinations about individuals.
8. A record from this system of records may be disclosed, as a routine use, to the public after either publication of the application pursuant to 35 U.S.C. 122(b) or issuance of a patent pursuant to 35 U.S.C. 151. Further, a record may be disclosed, subject to the limitations of 37 CFR 1.14, as a routine use, to the public if the record was filed in an application which became abandoned or in which the proceedings were terminated and which application is referenced by either a published application, an application open to public inspection or an issued patent.
9. A record from this system of records may be disclosed, as a routine use, to a Federal, State, or local law enforcement agency, if the USPTO becomes aware of a violation or potential violation of law or regulation.

Notice of Allowability	Application No.	Applicant(s)	
	12/424,320	ALLES ET AL.	
	Examiner	Art Unit	
	Dao Phan	3646	

-- The MAILING DATE of this communication appears on the cover sheet with the correspondence address--

All claims being allowable, PROSECUTION ON THE MERITS IS (OR REMAINS) CLOSED in this application. If not included herewith (or previously mailed), a Notice of Allowance (PTOL-85) or other appropriate communication will be mailed in due course. **THIS NOTICE OF ALLOWABILITY IS NOT A GRANT OF PATENT RIGHTS.** This application is subject to withdrawal from issue at the initiative of the Office or upon petition by the applicant. See 37 CFR 1.313 and MPEP 1308.

1. ☒ This communication is responsive to *10/12/2012*.

2. ☐ An election was made by the applicant in response to a restriction requirement set forth during the interview on _____; the restriction requirement and election have been incorporated into this action.

3. ☒ The allowed claim(s) is/are *1-52*. As a result of the allowed claim(s), you may be eligible to benefit from the **Patent Prosecution Highway** program at a participating intellectual property office for the corresponding application. For more information, please see http://www.uspto.gov/patents/init_events/pph/index.jsp or send an inquiry to PPHfeedback@uspto.gov .

4. ☐ Acknowledgment is made of a claim for foreign priority under 35 U.S.C. § 119(a)-(d) or (f).
   a) ☐ All b) ☐ Some* c) ☐ None of the:
      1. ☐ Certified copies of the priority documents have been received.
      2. ☐ Certified copies of the priority documents have been received in Application No. _____ .
      3. ☐ Copies of the certified copies of the priority documents have been received in this national stage application from the International Bureau (PCT Rule 17.2(a)).

   * Certified copies not received: _____.

Applicant has THREE MONTHS FROM THE "MAILING DATE" of this communication to file a reply complying with the requirements noted below. Failure to timely comply will result in ABANDONMENT of this application.
THIS THREE-MONTH PERIOD IS NOT EXTENDABLE.

5. ☐ CORRECTED DRAWINGS (as "replacement sheets") must be submitted.

   ☐ including changes required by the attached Examiner's Amendment / Comment or in the Office action of Paper No./Mail Date _____.

   Identifying indicia such as the application number (see 37 CFR 1.84(c)) should be written on the drawings in the front (not the back) of each sheet. Replacement sheet(s) should be labeled as such in the header according to 37 CFR 1.121(d).

6. ☐ DEPOSIT OF and/or INFORMATION about the deposit of BIOLOGICAL MATERIAL must be submitted. Note the attached Examiner's comment regarding REQUIREMENT FOR THE DEPOSIT OF BIOLOGICAL MATERIAL.

Attachment(s)

1. ☐ Notice of References Cited (PTO-892)
2. ☒ Information Disclosure Statements (PTO/SB/08), Paper No./Mail Date _____
3. ☐ Examiner's Comment Regarding Requirement for Deposit of Biological Material
4. ☐ Interview Summary (PTO-413), Paper No./Mail Date _____ .
5. ☐ Examiner's Amendment/Comment
6. ☐ Examiner's Statement of Reasons for Allowance
7. ☐ Other _____.

/Dao Phan/
Primary Examiner, Art Unit 3646

Issue Classification	Application/Control No.	Applicant(s)/Patent Under Reexamination
	12424320	ALLES ET AL.
	Examiner	**Art Unit**
	DAO PHAN	3646

ORIGINAL		INTERNATIONAL CLASSIFICATION										
CLASS	SUBCLASS	CLAIMED					NON-CLAIMED					
342	451	G	0	1	S	3 / 02 (2006.0)						

CROSS REFERENCE(S)

CLASS	SUBCLASS (ONE SUBCLASS PER BLOCK)				
342	457				

☒ Claims renumbered in the same order as presented by applicant ☐ CPA ☒ T.D. ☐ R.1.47

Final	Original	Final	Original	Final	Original	Final	Original	Final	Original	Final	Original	Final	Original	Final	Original
	1		17		33		49								
	2		18		34		50								
	3		19		35		51								
	4		20		36		52								
	5		21		37										
	6		22		38										
	7		23		39										
	8		24		40										
	9		25		41										
	10		26		42										
	11		27		43										
	12		28		44										
	13		29		45										
	14		30		46										
	15		31		47										
	16		32		48										

NONE (Assistant Examiner)	(Date)	**Total Claims Allowed:** 52	
/DAO PHAN/ Primary Examiner.Art Unit 3646 (Primary Examiner)	1/3/13 (Date)	O.G. Print Claim(s) 1	O.G. Print Figure 7

PTO/SB/08a (01-10)
Approved for use through 07/31/2012. OMB 0651-0031
U.S. Patent and Trademark Office; U.S. DEPARTMENT OF COMMERCE
Under the Paperwork Reduction Act of 1995, no persons are required to respond to a collection of information unless it contains a valid OMB control number.

INFORMATION DISCLOSURE STATEMENT BY APPLICANT

(Not for submission under 37 CFR 1.99)

Application Number	12424320
Filing Date	2009-04-15
First Named Inventor	ALLES et al.
Art Unit	3662
Examiner Name	Dao Linda Phan
Attorney Docket Number	AND01 082 CONT

U.S.PATENTS

Examiner Initial*	Cite No	Patent Number	Kind Code[1]	Issue Date	Name of Patentee or Applicant of cited Document	Pages,Columns,Lines where Relevant Passages or Relevant Figures Appear
	1	8155394	B2	2012-04-10	Allegra et al.	
	2	8106818	B2	2012-01-31	Bhattacharya et al.	
	3	8106817	B2	2012-01-31	Bhattacharya et al.	
	4	8068855	B2	2011-11-29	Dressler et al.	
	5	8068802	B2	2011-11-29	Bhattacharya et al.	
	6	8013785	B2	2011-09-06	Bhattacharya et al.	
	7	7899467	B2	2011-03-01	Feuerstein et al.	
	8	7848762	B2	2010-12-07	Gordon et al.	

 ALL REFERENCES CONSIDERED EXCEPT WHERE LINED THROUGH. /D.P./

INFORMATION DISCLOSURE STATEMENT BY APPLICANT (Not for submission under 37 CFR 1.99)		
	Application Number	12424320
	Filing Date	2009-04-15
	First Named Inventor	ALLES et al.
	Art Unit	3662
	Examiner Name	Dao Linda Phan
	Attorney Docket Number	AND01 082 CONT

	9	7796966	B2	2010-09-14	Bhattacharya et al.	
	10	7753278	B2	2010-07-13	Spain Jr. et al.	
	11	7734298	B2	2010-06-08	Bhattacharya et al.	
	12	7725111	B2	2010-05-25	Dressler et al.	
	13	7460505	B2	2008-12-02	Spain	
	14	7433695	B2	2008-10-07	Gordon et al.	
	15	7433652	B2	2008-10-07	Durgin	
	16	7383051	B2	2008-06-03	Spain Jr. et al.	
	17	7257414	B2	2007-08-14	Spain Jr. et al.	
	18	7233799	B2	2007-06-19	Spain Jr.	
	19	7167714	B2	2007-01-23	Dressler et al.	

 ALL REFERENCES CONSIDERED EXCEPT WHERE LINED THROUGH. /D.P./

INFORMATION DISCLOSURE STATEMENT BY APPLICANT (Not for submission under 37 CFR 1.99)		
	Application Number	12424320
	Filing Date	2009-04-15
	First Named Inventor	ALLES et al.
	Art Unit	3662
	Examiner Name	Dao Linda Phan
	Attorney Docket Number	AND01 082 CONT

	20	7116987	B2	2006-10-03	Spain Jr. et al.	
	21	6944465	B2	2005-09-13	Spain et al.	
	22	6782265	B2	2004-08-24	Perez-Breva et al.	
	23	6591112	B1	2003-07-08	Siccardo et al.	
	24	6449486	B1	2002-09-10	Rao	
	25	6393294	B1	2002-05-21	Perez-Breva et al.	
	26	6281834	B1	2001-08-28	Stilp	
	27	6269246	B1	2001-07-31	Rao et al.	
	28	6115605		2000-09-05	Siccardo et al.	
	29	6108558		2000-08-22	Vanderspool II	
	30	6097709		2000-08-01	Kuwabara	

 ALL REFERENCES CONSIDERED EXCEPT WHERE LINED THROUGH. /D.P./

INFORMATION DISCLOSURE STATEMENT BY APPLICANT (Not for submission under 37 CFR 1.99)		
	Application Number	12424320
	Filing Date	2009-04-15
	First Named Inventor	ALLES et al.
	Art Unit	3662
	Examiner Name	Dao Linda Phan
	Attorney Docket Number	AND01 082 CONT

	31	7250907	B2	2007-07-31	Krumm et al.	

If you wish to add additional U.S. Patent citation information please click the Add button.

U.S.PATENT APPLICATION PUBLICATIONS

Examiner Initial*	Cite No	Publication Number	Kind Code[1]	Publication Date	Name of Patentee or Applicant of cited Document	Pages,Columns,Lines where Relevant Passages or Relevant Figures Appear
	1	20040203539	A1	2004-10-14	Benes et al.	

If you wish to add additional U.S. Published Application citation information please click the Add button.

FOREIGN PATENT DOCUMENTS

Examiner Initial*	Cite No	Foreign Document Number[3]	Country Code[2] i	Kind Code[4]	Publication Date	Name of Patentee or Applicant of cited Document	Pages,Columns,Lines where Relevant Passages or Relevant Figures Appear	T[5]
	1							☐

If you wish to add additional Foreign Patent Document citation information please click the Add button

NON-PATENT LITERATURE DOCUMENTS

Examiner Initials*	Cite No	Include name of the author (in CAPITAL LETTERS), title of the article (when appropriate), title of the item (book, magazine, journal, serial, symposium, catalog, etc), date, pages(s), volume-issue number(s), publisher, city and/or country where published.	T[5]
	1	RICK ROBERTS, "Project: IEEE P802.15 Working Group for Wireless Personal Area Networks (WPANS)," Harris Corporation, Melbourne Florida, October 4, 2004, pages1-11.	☐
	2	STEPHANIE BELL, "A Beginners Guide to Uncertainty of Measurement, The National Physics Laboratory of the United Kingdom of Great Britain and Northern Ireland, Teddington, Middlesex, UK, 2001, pages1-41.	☐

If you wish to add additional non-patent literature document citation information please click the Add button

 ALL REFERENCES CONSIDERED EXCEPT WHERE LINED THROUGH. /D.P./

INFORMATION DISCLOSURE STATEMENT BY APPLICANT (Not for submission under 37 CFR 1.99)		
	Application Number	12424320
	Filing Date	2009-04-15
	First Named Inventor	ALLES et al.
	Art Unit	3662
	Examiner Name	Dao Linda Phan
	Attorney Docket Number	AND01 082 CONT

EXAMINER SIGNATURE			
Examiner Signature	/Dao Phan/	Date Considered	01/03/2013

*EXAMINER: Initial if reference considered, whether or not citation is in conformance with MPEP 609. Draw line through a citation if not in conformance and not considered. Include copy of this form with next communication to applicant.

[1] See Kind Codes of USPTO Patent Documents at www.USPTO.GOV or MPEP 901.04. [2] Enter office that issued the document, by the two-letter code (WIPO Standard ST.3). [3] For Japanese patent documents, the indication of the year of the reign of the Emperor must precede the serial number of the patent document. [4] Kind of document by the appropriate symbols as indicated on the document under WIPO Standard ST.16 if possible. [5] Applicant is to place a check mark here if English language translation is attached.

 ALL REFERENCES CONSIDERED EXCEPT WHERE LINED THROUGH. /D.P./

INFORMATION DISCLOSURE STATEMENT BY APPLICANT (Not for submission under 37 CFR 1.99)		
	Application Number	12424320
	Filing Date	2009-04-15
	First Named Inventor	ALLES et al.
	Art Unit	3662
	Examiner Name	Dao Linda Phan
	Attorney Docket Number	AND01 082 CONT

CERTIFICATION STATEMENT

Please see 37 CFR 1.97 and 1.98 to make the appropriate selection(s):

☐ That each item of information contained in the information disclosure statement was first cited in any communication from a foreign patent office in a counterpart foreign application not more than three months prior to the filing of the information disclosure statement. See 37 CFR 1.97(e)(1).

OR

☒ That no item of information contained in the information disclosure statement was cited in a communication from a foreign patent office in a counterpart foreign application, and, to the knowledge of the person signing the certification after making reasonable inquiry, no item of information contained in the information disclosure statement was known to any individual designated in 37 CFR 1.56(c) more than three months prior to the filing of the information disclosure statement. See 37 CFR 1.97(e)(2).

☐ See attached certification statement.

☐ The fee set forth in 37 CFR 1.17 (p) has been submitted herewith.

☐ A certification statement is not submitted herewith.

SIGNATURE

A signature of the applicant or representative is required in accordance with CFR 1.33, 10.18. Please see CFR 1.4(d) for the form of the signature.

Signature	/Mark C. Comtois/	Date (YYYY-MM-DD)	2012-10-31
Name/Print	Mark C. Comtois	Registration Number	46285

This collection of information is required by 37 CFR 1.97 and 1.98. The information is required to obtain or retain a benefit by the public which is to file (and by the USPTO to process) an application. Confidentiality is governed by 35 U.S.C. 122 and 37 CFR 1.14. This collection is estimated to take 1 hour to complete, including gathering, preparing and submitting the completed application form to the USPTO. Time will vary depending upon the individual case. Any comments on the amount of time you require to complete this form and/or suggestions for reducing this burden, should be sent to the Chief Information Officer, U.S. Patent and Trademark Office, U.S. Department of Commerce, P.O. Box 1450, Alexandria, VA 22313-1450. DO NOT SEND FEES OR COMPLETED FORMS TO THIS ADDRESS. **SEND TO: Commissioner for Patents, P.O. Box 1450, Alexandria, VA 22313-1450.**

 ALL REFERENCES CONSIDERED EXCEPT WHERE LINED THROUGH. /D.P./

UNITED STATES PATENT AND TRADEMARK OFFICE

UNITED STATES DEPARTMENT OF COMMERCE
United States Patent and Trademark Office
Address: COMMISSIONER FOR PATENTS
P.O. Box 1450
Alexandria, Virginia 22313-1450
www.uspto.gov

BIB DATA SHEET

CONFIRMATION NO. 1334

SERIAL NUMBER	FILING or 371(c) DATE	CLASS	GROUP ART UNIT	ATTORNEY DOCKET NO.
12/424,320	04/15/2009 **RULE**	342	3646	AND01 082 CONT

APPLICANTS

Martin Alles, Vienna, VA;
John Carlson, Dulles, VA;
George Maher, Herndon, VA;
Selcuk Mazlum, Leesburg, VA;

**** CONTINUING DATA ***************************

This application is a CON of 12/026,333 02/05/2008 PAT 7,561,104
which claims benefit of 60/899,379 02/05/2007

**** FOREIGN APPLICATIONS ****************************

**** IF REQUIRED, FOREIGN FILING LICENSE GRANTED ****

04/27/2009

Foreign Priority claimed	☐ Yes ☑ No	☐ Met after Allowance	STATE OR COUNTRY	SHEETS DRAWINGS	TOTAL CLAIMS	INDEPENDENT CLAIMS
35 USC 119(a-d) conditions met	☐ Yes ☑ No		VA	10	52	4
Verified and Acknowledged	/DAO LINDA PHAN/ Examiner's Signature	Initials				

ADDRESS

Duane Morris LLP
505 9th Street, N.W.
Suite 1000
Washington, DC 20004
UNITED STATES

TITLE

METHOD TO MODIFY CALIBRATION DATA USED TO LOCATE A MOBILE UNIT

FILING FEE RECEIVED		
2974	FEES: Authority has been given in Paper No._____ to charge/credit DEPOSIT ACCOUNT No._____ for following:	☐ All Fees ☐ 1.16 Fees (Filing) ☐ 1.17 Fees (Processing Ext. of time) ☐ 1.18 Fees (Issue) ☐ Other _____ ☐ Credit

EAST Search History

EAST Search History (Interference)

Ref #	Hits	Search Query	DBs	Default Operator	Plurals	Time Stamp
L1	460745	calibrat$6	US-PGPUB; USPAT; UPAD	OR	OFF	2013/01/02 14:55
L2	3145746	measure$6	US-PGPUB; USPAT; UPAD	OR	OFF	2013/01/02 14:55
L3	3461747	compare$3 or comparing	US-PGPUB; USPAT; UPAD	OR	OFF	2013/01/02 14:56
L4	8899	(3 and 2 and 1).clm.	US-PGPUB; USPAT; UPAD	OR	OFF	2013/01/02 14:57
L5	64855	3 same 1	US-PGPUB; USPAT; UPAD	OR	OFF	2013/01/02 14:58
L6	4045	(5 and 2 and 1).clm.	US-PGPUB; USPAT; UPAD	OR	OFF	2013/01/02 14:58
L7	312219	3 with 2	US-PGPUB; USPAT; UPAD	OR	OFF	2013/01/02 14:59
L8	2276	(5 and 7 and 1).clm.	US-PGPUB; USPAT; UPAD	OR	OFF	2013/01/02 15:00
L9	57111	network$2 near7 2	US-PGPUB; USPAT; UPAD	OR	OFF	2013/01/02 15:03
L10	49	(5 and 7 and 1 and 9).clm.	US-PGPUB; USPAT; UPAD	OR	OFF	2013/01/02 15:03
L11	124007	collect$6 with 2	US-PGPUB; USPAT; UPAD	OR	OFF	2013/01/02 15:06
L12	89	(5 and 7 and 1 and 11).clm.	US-PGPUB; USPAT; UPAD	OR	OFF	2013/01/02 15:06
L13	452453	determin$6 with location$3	US-PGPUB; USPAT; UPAD	OR	OFF	2013/01/02 15:09
L14	782223	determin$6 with position$3	US-PGPUB; USPAT; UPAD	OR	OFF	2013/01/02 15:09
L15	1058506	13 or 14	US-PGPUB; USPAT; UPAD	OR	OFF	2013/01/02 15:09
L16	405	(5 and 7 and 1 and 15).clm.	US-PGPUB; USPAT; UPAD	OR	OFF	2013/01/02 15:09
L17	1610781	observe$3 or observing	US-PGPUB; USPAT; UPAD	OR	OFF	2013/01/02 15:10
L18	23	(5 and 7 and 1 and 15 and 17).clm.	US-PGPUB; USPAT; UPAD	OR	OFF	2013/01/02 15:10

1/2/2013 3:13:21 PM

Search Notes	Application/Control No.	Applicant(s)/Patent Under Reexamination
	12424320	ALLES ET AL.
	Examiner	**Art Unit**
	DAO PHAN	3662

SEARCHED

Class	Subclass	Date	Examiner
342	451, 457, 463-465	3/23/12	dp
455	456.1, 456.6, 457		
Updated		1/3/13	dp

SEARCH NOTES

Search Notes	Date	Examiner
East text (See attached)	3/23/12	dp
Updated	1/3/13	dp

INTERFERENCE SEARCH

Class	Subclass	Date	Examiner
See search history printout		1/3/13	dp

PTO/SB/08a (01-10)
Approved for use through 07/31/2012. OMB 0651-0031
U.S. Patent and Trademark Office; U.S. DEPARTMENT OF COMMERCE
Under the Paperwork Reduction Act of 1995, no persons are required to respond to a collection of information unless it contains a valid OMB control number.

INFORMATION DISCLOSURE STATEMENT BY APPLICANT

(Not for submission under 37 CFR 1.99)

Application Number	12424320
Filing Date	2009-04-15
First Named Inventor	ALLES et al.
Art Unit	3662
Examiner Name	Dao Linda Phan
Attorney Docket Number	AND01 082 CONT

U.S.PATENTS

Examiner Initial*	Cite No	Patent Number	Kind Code[1]	Issue Date	Name of Patentee or Applicant of cited Document	Pages,Columns,Lines where Relevant Passages or Relevant Figures Appear
	1	8155394	B2	2012-04-10	Allegra et al.	
	2	8106818	B2	2012-01-31	Bhattacharya et al.	
	3	8106817	B2	2012-01-31	Bhattacharya et al.	
	4	8068855	B2	2011-11-29	Dressler et al.	
	5	8068802	B2	2011-11-29	Bhattacharya et al.	
	6	8013785	B2	2011-09-06	Bhattacharya et al.	
	7	7899467	B2	2011-03-01	Feuerstein et al.	
	8	7848762	B2	2010-12-07	Gordon et al.	

INFORMATION DISCLOSURE STATEMENT BY APPLICANT (Not for submission under 37 CFR 1.99)		
	Application Number	12424320
	Filing Date	2009-04-15
	First Named Inventor	ALLES et al.
	Art Unit	3662
	Examiner Name	Dao Linda Phan
	Attorney Docket Number	AND01 082 CONT

	9	7796966	B2	2010-09-14	Bhattacharya et al.	
	10	7753278	B2	2010-07-13	Spain Jr. et al.	
	11	7734298	B2	2010-06-08	Bhattacharya et al.	
	12	7725111	B2	2010-05-25	Dressler et al.	
	13	7460505	B2	2008-12-02	Spain	
	14	7433695	B2	2008-10-07	Gordon et al.	
	15	7433652	B2	2008-10-07	Durgin	
	16	7383051	B2	2008-06-03	Spain Jr. et al.	
	17	7257414	B2	2007-08-14	Spain Jr. et al.	
	18	7233799	B2	2007-06-19	Spain Jr.	
	19	7167714	B2	2007-01-23	Dressler et al.	

INFORMATION DISCLOSURE STATEMENT BY APPLICANT (Not for submission under 37 CFR 1.99)		
	Application Number	12424320
	Filing Date	2009-04-15
	First Named Inventor	ALLES et al.
	Art Unit	3662
	Examiner Name	Dao Linda Phan
	Attorney Docket Number	AND01 082 CONT

	20	7116987	B2	2006-10-03	Spain Jr. et al.	
	21	6944465	B2	2005-09-13	Spain et al.	
	22	6782265	B2	2004-08-24	Perez-Breva et al.	
	23	6591112	B1	2003-07-08	Siccardo et al.	
	24	6449486	B1	2002-09-10	Rao	
	25	6393294	B1	2002-05-21	Perez-Breva et al.	
	26	6281834	B1	2001-08-28	Stilp	
	27	6269246	B1	2001-07-31	Rao et al.	
	28	6115605		2000-09-05	Siccardo et al.	
	29	6108558		2000-08-22	Vanderspool II	
	30	6097709		2000-08-01	Kuwabara	

INFORMATION DISCLOSURE STATEMENT BY APPLICANT (Not for submission under 37 CFR 1.99)		
	Application Number	12424320
	Filing Date	2009-04-15
	First Named Inventor	ALLES et al.
	Art Unit	3662
	Examiner Name	Dao Linda Phan
	Attorney Docket Number	AND01 082 CONT

	31	7250907	B2	2007-07-31	Krumm et al.	

If you wish to add additional U.S. Patent citation information please click the Add button.

U.S.PATENT APPLICATION PUBLICATIONS

Examiner Initial*	Cite No	Publication Number	Kind Code[1]	Publication Date	Name of Patentee or Applicant of cited Document	Pages,Columns,Lines where Relevant Passages or Relevant Figures Appear
	1	20040203539	A1	2004-10-14	Benes et al.	

If you wish to add additional U.S. Published Application citation information please click the Add button.

FOREIGN PATENT DOCUMENTS

Examiner Initial*	Cite No	Foreign Document Number[3]	Country Code[2] i	Kind Code[4]	Publication Date	Name of Patentee or Applicant of cited Document	Pages,Columns,Lines where Relevant Passages or Relevant Figures Appear	T[5]
	1							☐

If you wish to add additional Foreign Patent Document citation information please click the Add button

NON-PATENT LITERATURE DOCUMENTS

Examiner Initials*	Cite No	Include name of the author (in CAPITAL LETTERS), title of the article (when appropriate), title of the item (book, magazine, journal, serial, symposium, catalog, etc), date, pages(s), volume-issue number(s), publisher, city and/or country where published.	T[5]
	1	RICK ROBERTS, "Project: IEEE P802.15 Working Group for Wireless Personal Area Networks (WPANS)," Harris Corporation, Melbourne Florida, October 4, 2004, pages1-11.	☐
	2	STEPHANIE BELL, "A Beginners Guide to Uncertainty of Measurement, The National Physics Laboratory of the United Kingdom of Great Britain and Northern Ireland, Teddington, Middlesex, UK, 2001, pages1-41.	☐

If you wish to add additional non-patent literature document citation information please click the Add button

INFORMATION DISCLOSURE STATEMENT BY APPLICANT (Not for submission under 37 CFR 1.99)		
	Application Number	12424320
	Filing Date	2009-04-15
	First Named Inventor	ALLES et al.
	Art Unit	3662
	Examiner Name	Dao Linda Phan
	Attorney Docket Number	AND01 082 CONT

EXAMINER SIGNATURE			
Examiner Signature		Date Considered	

*EXAMINER: Initial if reference considered, whether or not citation is in conformance with MPEP 609. Draw line through a citation if not in conformance and not considered. Include copy of this form with next communication to applicant.

[1] See Kind Codes of USPTO Patent Documents at www.USPTO.GOV or MPEP 901.04. [2] Enter office that issued the document, by the two-letter code (WIPO Standard ST.3). [3] For Japanese patent documents, the indication of the year of the reign of the Emperor must precede the serial number of the patent document. [4] Kind of document by the appropriate symbols as indicated on the document under WIPO Standard ST.16 if possible. [5] Applicant is to place a check mark here if English language translation is attached.

INFORMATION DISCLOSURE STATEMENT BY APPLICANT (Not for submission under 37 CFR 1.99)		
	Application Number	12424320
	Filing Date	2009-04-15
	First Named Inventor	ALLES et al.
	Art Unit	3662
	Examiner Name	Dao Linda Phan
	Attorney Docket Number	AND01 082 CONT

CERTIFICATION STATEMENT

Please see 37 CFR 1.97 and 1.98 to make the appropriate selection(s):

☐ That each item of information contained in the information disclosure statement was first cited in any communication from a foreign patent office in a counterpart foreign application not more than three months prior to the filing of the information disclosure statement. See 37 CFR 1.97(e)(1).

OR

☒ That no item of information contained in the information disclosure statement was cited in a communication from a foreign patent office in a counterpart foreign application, and, to the knowledge of the person signing the certification after making reasonable inquiry, no item of information contained in the information disclosure statement was known to any individual designated in 37 CFR 1.56(c) more than three months prior to the filing of the information disclosure statement. See 37 CFR 1.97(e)(2).

☐ See attached certification statement.

☐ The fee set forth in 37 CFR 1.17 (p) has been submitted herewith.

☐ A certification statement is not submitted herewith.

SIGNATURE

A signature of the applicant or representative is required in accordance with CFR 1.33, 10.18. Please see CFR 1.4(d) for the form of the signature.

Signature	/Mark C. Comtois/	Date (YYYY-MM-DD)	2012-10-31
Name/Print	Mark C. Comtois	Registration Number	46285

This collection of information is required by 37 CFR 1.97 and 1.98. The information is required to obtain or retain a benefit by the public which is to file (and by the USPTO to process) an application. Confidentiality is governed by 35 U.S.C. 122 and 37 CFR 1.14. This collection is estimated to take 1 hour to complete, including gathering, preparing and submitting the completed application form to the USPTO. Time will vary depending upon the individual case. Any comments on the amount of time you require to complete this form and/or suggestions for reducing this burden, should be sent to the Chief Information Officer, U.S. Patent and Trademark Office, U.S. Department of Commerce, P.O. Box 1450, Alexandria, VA 22313-1450. DO NOT SEND FEES OR COMPLETED FORMS TO THIS ADDRESS. **SEND TO: Commissioner for Patents, P.O. Box 1450, Alexandria, VA 22313-1450.**

Electronic Acknowledgement Receipt

EFS ID:	14115299
Application Number:	12424320
International Application Number:	
Confirmation Number:	1334
Title of Invention:	METHOD TO MODIFY CALIBRATION DATA USED TO LOCATE A MOBILE UNIT
First Named Inventor/Applicant Name:	Martin Alles
Customer Number:	79172
Filer:	Mark Charles Comtois/Nicola Kinney
Filer Authorized By:	Mark Charles Comtois
Attorney Docket Number:	AND01 082 CONT
Receipt Date:	31-OCT-2012
Filing Date:	15-APR-2009
Time Stamp:	15:12:08
Application Type:	Utility under 35 USC 111(a)

Payment information:

Submitted with Payment	no

File Listing:

Document Number	Document Description	File Name	File Size(Bytes)/ Message Digest	Multi Part /.zip	Pages (if appl.)
1	Information Disclosure Statement (IDS) Form (SB08)	082CONTREIDS.pdf	562992 f17ea4aed677270dd0dec47b5da253f52beacc68	no	6

Warnings:

Information:

This is not an USPTO supplied IDS fillable form					
2	Non Patent Literature	beginnersguide.pdf	4056447 5bb77b5694d761cce43f8b493c501304a900025e	no	41
Warnings:					
Information:					
3	Non Patent Literature	wpans.pdf	1254875 862ea8fc8470d87a096293134dfbe7c66196dda1	no	11
Warnings:					
Information:					
			Total Files Size (in bytes):	5874314	

This Acknowledgement Receipt evidences receipt on the noted date by the USPTO of the indicated documents, characterized by the applicant, and including page counts, where applicable. It serves as evidence of receipt similar to a Post Card, as described in MPEP 503.

<u>New Applications Under 35 U.S.C. 111</u>
If a new application is being filed and the application includes the necessary components for a filing date (see 37 CFR 1.53(b)-(d) and MPEP 506), a Filing Receipt (37 CFR 1.54) will be issued in due course and the date shown on this Acknowledgement Receipt will establish the filing date of the application.

<u>National Stage of an International Application under 35 U.S.C. 371</u>
If a timely submission to enter the national stage of an international application is compliant with the conditions of 35 U.S.C. 371 and other applicable requirements a Form PCT/DO/EO/903 indicating acceptance of the application as a national stage submission under 35 U.S.C. 371 will be issued in addition to the Filing Receipt, in due course.

<u>New International Application Filed with the USPTO as a Receiving Office</u>
If a new international application is being filed and the international application includes the necessary components for an international filing date (see PCT Article 11 and MPEP 1810), a Notification of the International Application Number and of the International Filing Date (Form PCT/RO/105) will be issued in due course, subject to prescriptions concerning national security, and the date shown on this Acknowledgement Receipt will establish the international filing date of the application.

IN THE UNITED STATES PATENT AND TRADEMARK OFFICE

In re the Patent Application of Martin Alles, et al.

Serial No.:	12/424,320	Art Unit:	3662
Filed:	April 15, 2009	Examiner:	Dao Linda Phan

Title: METHOD TO MODIFY CALIBRATION DATA USED TO LOCATE A MOBILE UNIT

AMENDMENT

Commissioner for Patents
P.O. Box 1450
Alexandria, Virginia 22313-1450

Sir:

Responsive to the Office Action mailed July 12, 2012, Applicant submits the following amendment and remarks.

Applicant's **Amendment to the Claims** begins on Page 2 of this paper.

Applicant's **Remarks** begin on Page 10 of this paper.

Amendment to the Claims:

1. (Currently Amended) A method for determining a location of a mobile station, comprising:

providing a database of previously-gathered calibration data for a predetermined region in a wireless network;

collecting observed network measurement data;

modifying said observed network measurement data; and

comparing said modified network measurement data with said database of calibration data by positioning determining equipment to thereby determine the location of the mobile station.

2. (Original) The method of Claim 1 wherein said database comprises previously-gathered calibration data at one or more predetermined calibration points within said region.

3. (Original) The method of Claim 2 wherein said previously-gathered calibration data at one or more predetermined calibration points is combined to form previously-gathered calibration data for one or more non-uniform grid points within said region.

4. (Original) The method of Claim 1 wherein said database comprises previously-gathered calibration data for one or more non-uniform grid points within said region.

5. (Original) The method of Claim 1 wherein said observed network measurement data includes data collected at the mobile station.

6. (Original) The method of Claim 1 wherein said previously-gathered calibration data includes signal strength information measured at a predetermined calibration point within said region for a signal transmitted from a known location within or in proximity to said region.

7. (Original) The method of Claim 1 wherein said previously-gathered calibration data includes signal strength information measured by a receiver at a known location within or in proximity to said region for a signal transmitted from a predetermined calibration point within said region.

8. (Original) The method of Claim 1 wherein said previously-gathered calibration data includes round trip time information for signals traveling between a predetermined calibration point within said region and a known location within or in proximity to said region.

9. (Original) The method of Claim 1 wherein said previously-gathered calibration data includes time difference of arrival information for a first signal traveling between a first known location and a predetermined calibration point within said region and a second signal traveling between a second known location and said calibration point.

10. (Original) The method of Claim 1 wherein said previously-gathered calibration data includes information identifying a serving cell of a transmitter transmitting a signal received at a predetermined calibration point within said region.

11. (Original) The method of Claim 1 wherein said previously-gathered calibration data includes information identifying a serving sector of a transmitter transmitting a signal received at a predetermined calibration point within said region.

12. (Original) The method of Claim 1 wherein said previously-gathered calibration data includes information regarding a state of said wireless network.

13. (Original) The method of Claim 1 wherein said previously-gathered calibration data includes calibration data gathered at a predetermined calibration point within said region wherein said predetermined calibration point is not located within a structure.

14. (Original) The method of Claim 13 wherein said observed network measurement data is collected at a mobile station located within a structure.

15. (Original) A system for determining a location of a mobile station, comprising:

a database of previously-gathered calibration data for a predetermined region in a wireless network;

circuitry for collecting observed network measurement data;

circuitry for modifying said observed network measurement data; and

circuitry for comparing said modified network measurement data with said database of calibration data to thereby determine the location of the mobile station.

16. (Original) The system of Claim 15 wherein said database comprises previously-gathered calibration data at one or more predetermined calibration points within said region.

17. (Original) The system of Claim 16 further comprising circuitry for combining said previously-gathered calibration data at one or more predetermined calibration points to thereby form previously-gathered calibration data for one or more non-uniform grid points within said region.

18. (Original) The system of Claim 15 wherein said database comprises previously-gathered calibration data for one or more non-uniform grid points within said region.

19. (Original) The system of Claim 15 wherein said mobile station includes said circuitry for collecting observed network measurement data.

20. (Original) The system of Claim 15 further comprising circuitry for measuring signal strength at a predetermined calibration point within said region for a signal transmitted from a known location within or in proximity to said region.

21. (Original) The system of Claim 15 further comprising circuitry for measuring signal strength at a receiver at a known location within or in proximity to said region for a signal transmitted from a predetermined calibration point within said region.

22. (Original) The system of Claim 15 further comprising circuitry for determining round trip time for signals traveling between a predetermined calibration point within said region and a known location within or in proximity to said region.

23. (Original) The system of Claim 15 further comprising circuitry for determining time difference of arrival for a first signal traveling between a first known location and a predetermined calibration point within said region and a second signal traveling between a second known location and said calibration point.

24. (Original) The system of Claim 15 further comprising circuitry for identifying a serving cell of a transmitter transmitting a signal received at a predetermined calibration point within said region.

25. (Original) The system of Claim 15 further comprising circuitry for identifying a serving sector of a transmitter transmitting a signal received at a predetermined calibration point within said region.

26. (Original) The system of Claim 15 wherein said previously-gathered calibration data includes information regarding a state of said wireless network.

27. (Original) The system of Claim 15 wherein said previously-gathered calibration data includes calibration data gathered at a predetermined calibration point within said region wherein said predetermined calibration point is not located within a structure.

28. (Original) The system of Claim 27 wherein said observed network measurement data is collected at a mobile station located within a structure.

29. (Currently Amended) A method for determining a location of a mobile station, comprising:

providing a database of previously-gathered calibration data for a predetermined region in a wireless network, wherein said network includes a serving transmitter;

collecting observed network measurement data including a first signal characteristic from said serving transmitter;

modifying said observed network measurement data using said first signal characteristic; and

comparing said modified network measurement data with said database of calibration data <u>by positioning determining equipment</u> to thereby determine the location of the mobile station.

30. (Original) The method of Claim 29 wherein said database comprises previously-gathered calibration data for one or more non-uniform grid points within said region.

31. (Original) The method of Claim 29 wherein said observed network measurement data includes data collected at the mobile station.

32. (Original) The method of Claim 29 wherein said previously-gathered calibration data includes calibration data gathered at a predetermined calibration point within said region wherein said predetermined calibration point is not located within a structure.

33. (Original) The method of Claim 32 wherein said observed network measurement data is collected at a mobile station located within a structure.

34. (Original) The method of Claim 29 wherein said first signal characteristic is signal strength.

35. (Original) The method of Claim 34 wherein said collecting observed network measurement data further includes collecting a second signal characteristic from a neighboring transmitter wherein said second signal characteristic is signal strength.

36. (Original) The method of Claim 35 wherein the modifying of said calibration data uses a difference between said first and second signal characteristics.

37. (Original) The method of Claim 29 wherein said first signal characteristic is signal strength of a control channel transmitted by said serving transmitter and received by said mobile station.

38. (Original) The method of Claim 37 wherein said collecting observed network measurement data further includes collecting a second signal characteristic from a neighboring transmitter wherein said second signal characteristic is signal strength of a control channel transmitted by said neighboring transmitter and received by said mobile station.

39. (Original) The method of Claim 29 wherein said observed network measurement data includes a data set comprising:

$[P_1,... P_n, TA]$

where:

P_1 represents the signal strength of said serving transmitter as measured at said mobile station,

P_n represents a signal strength of at a nth neighboring transmitter as measured at said mobile station, and

TA represents a timing advance parameter;

and wherein said modified network measurement data includes a data set comprising:

$[0,...P_1\text{-}P_{n-1}, P_1\text{-}P_n, TA]$

where:

0 represents a difference between P_1 and P_1,

$P_1\text{-}P_{n-1}$ represents a difference between P_1 and P_{n-1}, and

$P_1\text{-}P_n$ represents a difference between P_1 and P_n.

40. (Original) The method of Claim 39 wherein said first neighboring transmitter is not a member of said wireless network.

41. (Currently Amended) A method for determining a location of a mobile station, comprising:

providing a database of previously-gathered calibration data for a predetermined region in a wireless network;

collecting observed network measurement data from each of a plurality of transmitters including a signal characteristic from each one of said plural transmitters;

determining an average value for select ones of said signal characteristics;

modifying said observed network measurement data using said average value; and

comparing said modified network measurement data with said database of calibration data <u>by positioning determining equipment</u> to thereby determine the location of the mobile station.

42. (Original) The method of Claim 41 wherein said database comprises previously-gathered calibration data for one or more non-uniform grid points within said region.

43. (Original) The method of Claim 41 wherein said observed network measurement data includes data collected at the mobile station.

44. (Original) The method of Claim 41 wherein said previously-gathered calibration data includes calibration data gathered at a predetermined calibration point within said region wherein said predetermined calibration point is not located within a structure.

45. (Original) The method of Claim 41 wherein said observed network measurement data is collected at a mobile station located within a structure.

46. (Original) The method of Claim 41 wherein said signal characteristic is signal strength.

47. (Original) The method of Claim 46 wherein the modifying of said calibration data uses a difference between said average value and said signal characteristic for a first one of said plural transmitters.

48. (Original) The method of Claim 41 wherein said signal characteristic is signal strength of a control channel.

49. (Original) The method of Claim 41, wherein the observed network measurement data includes received signal strength of said transmitters as said mobile station.

50. (Original) The method of Claim 41 wherein said observed network measurement data includes a data set comprising:

$[P_1, P_2, P_3, TA]$

where:

P_1 represents the signal strength of a first one of said plural transmitters as measured at said mobile station,

P_2 represents a signal strength of a second one of said plural transmitters as measured at said mobile station wherein $P_2 > P_1$,

P_3 represents a signal strength of a third one of said plural transmitters as measured at said mobile station wherein $P_2 > P_3$, and

TA represents a timing advance parameter;

and wherein said modified network measurement data includes a data set comprising:

$[P_1\text{-}P_{AVG}, P_2\text{-}P_{AVG}, P_3\text{-}P_{AVG}, TA]$

where:

P_{AVG} represents an average value of P_1, P_2, and P_3,

P_1-P_{AVG} represents a difference between P_1 and P_{AVG},

P_2-P_{AVG} represents a difference between P_2 and P_{AVG},

P_3-P_{AVG} represents a difference between P_3 and P_{AVG},

51. (Original) The method of Claim 50 wherein said first transmitter is a serving transmitter for said mobile station and said second and third transmitters are neighboring transmitters.

52. (Original) The method of Claim 41 wherein at least one of said plurality of transmitters is not a member of said wireless network.

Remarks

Applicant acknowledges the allowance of Claims 15-28.

Claims 1-14 and 29-52 stand rejected under Section 101.

The Section 101 Rejection

While Applicant disagrees that Claims 1-14 and 29-52 are somehow directed to non-statutory subject matter as each independent method claim (Claims 1, 29 and 41) recites a database and an element which uses the database to transform data in the database, Applicant has amended these independent claims to tie the respective comparing steps to a specific machine. In view of Applicant's amendment to independent Claims 1, 29 and 41, Applicant respectfully requests reconsideration and withdrawal of the Section 101 rejection to Claims 1-14 and 29-52.

Applicant respectfully submits that the application is in condition for allowance and a notice to this effect is respectfully requested.

The Office is requested and hereby authorized to charge any required extension-of-time fees against Deposit Account Number 04-1679 to Duane Morris LLP.

If any point remains that is deemed best resolved through a telephonic conversation, the Office is hereby requested to contact the undersigned directly.

Respectfully submitted,

/Mark C. Comtois

Mark C. Comtois Reg. No. 46,285
Ryan T. Hardee Reg. No. 57,515

DUANE MORRIS LLP
505 9th Street N.W., Suite 1000
Washington, D.C. 20004
Telephone: (202) 776-7800
Telecopier: (202) 776-7801
Dated: October 12, 2012

Electronic Acknowledgement Receipt

EFS ID:	13970952
Application Number:	12424320
International Application Number:	
Confirmation Number:	1334
Title of Invention:	METHOD TO MODIFY CALIBRATION DATA USED TO LOCATE A MOBILE UNIT
First Named Inventor/Applicant Name:	Martin Alles
Customer Number:	79172
Filer:	Mark Charles Comtois/laureen ponder
Filer Authorized By:	Mark Charles Comtois
Attorney Docket Number:	AND01 082 CONT
Receipt Date:	12-OCT-2012
Filing Date:	15-APR-2009
Time Stamp:	12:44:32
Application Type:	Utility under 35 USC 111(a)

Payment information:

Submitted with Payment	no

File Listing:

Document Number	Document Description	File Name	File Size(Bytes)/ Message Digest	Multi Part /.zip	Pages (if appl.)
1		AND01082CONTOctAmdt.pdf	778872 22aeb66e89fa3922b4c163fbf60c3039d9040b16	yes	10

	Multipart Description/PDF files in .zip description		
	Document Description	**Start**	**End**
	Amendment/Req. Reconsideration-After Non-Final Reject	1	1
	Claims	2	9
	Applicant Arguments/Remarks Made in an Amendment	10	10

Warnings:	
Information:	
Total Files Size (in bytes):	778872

This Acknowledgement Receipt evidences receipt on the noted date by the USPTO of the indicated documents, characterized by the applicant, and including page counts, where applicable. It serves as evidence of receipt similar to a Post Card, as described in MPEP 503.

New Applications Under 35 U.S.C. 111
If a new application is being filed and the application includes the necessary components for a filing date (see 37 CFR 1.53(b)-(d) and MPEP 506), a Filing Receipt (37 CFR 1.54) will be issued in due course and the date shown on this Acknowledgement Receipt will establish the filing date of the application.

National Stage of an International Application under 35 U.S.C. 371
If a timely submission to enter the national stage of an international application is compliant with the conditions of 35 U.S.C. 371 and other applicable requirements a Form PCT/DO/EO/903 indicating acceptance of the application as a national stage submission under 35 U.S.C. 371 will be issued in addition to the Filing Receipt, in due course.

New International Application Filed with the USPTO as a Receiving Office
If a new international application is being filed and the international application includes the necessary components for an international filing date (see PCT Article 11 and MPEP 1810), a Notification of the International Application Number and of the International Filing Date (Form PCT/RO/105) will be issued in due course, subject to prescriptions concerning national security, and the date shown on this Acknowledgement Receipt will establish the international filing date of the application.

PTO/SB/06 (07-06)
Approved for use through 1/31/2007. OMB 0651-0032
U.S. Patent and Trademark Office; U.S. DEPARTMENT OF COMMERCE
Under the Paperwork Reduction Act of 1995, no persons are required to respond to a collection of information unless it displays a valid OMB control number.

PATENT APPLICATION FEE DETERMINATION RECORD

Substitute for Form PTO-875

Application or Docket Number	Filing Date	☐ To be Mailed
12/424,320	04/15/2009	

APPLICATION AS FILED – PART I

FOR	(Column 1) NUMBER FILED	(Column 2) NUMBER EXTRA	SMALL ENTITY ☐ RATE ($)	SMALL ENTITY FEE ($)	OR	OTHER THAN SMALL ENTITY RATE ($)	OTHER THAN SMALL ENTITY FEE ($)
☐ BASIC FEE (37 CFR 1.16(a), (b), or (c))	N/A	N/A	N/A			N/A	
☐ SEARCH FEE (37 CFR 1.16(k), (i), or (m))	N/A	N/A	N/A			N/A	
☐ EXAMINATION FEE (37 CFR 1.16(o), (p), or (q))	N/A	N/A	N/A			N/A	
TOTAL CLAIMS (37 CFR 1.16(i))	minus 20 =	*	X $ =		OR	X $ =	
INDEPENDENT CLAIMS (37 CFR 1.16(h))	minus 3 =	*	X $ =			X $ =	
☐ APPLICATION SIZE FEE (37 CFR 1.16(s))	If the specification and drawings exceed 100 sheets of paper, the application size fee due is $250 ($125 for small entity) for each additional 50 sheets or fraction thereof. See 35 U.S.C. 41(a)(1)(G) and 37 CFR 1.16(s).						
☐ MULTIPLE DEPENDENT CLAIM PRESENT (37 CFR 1.16(j))							
* If the difference in column 1 is less than zero, enter "0" in column 2.			TOTAL			TOTAL	

APPLICATION AS AMENDED – PART II

AMENDMENT 10/12/2012	(Column 1) CLAIMS REMAINING AFTER AMENDMENT		(Column 2) HIGHEST NUMBER PREVIOUSLY PAID FOR	(Column 3) PRESENT EXTRA	SMALL ENTITY RATE ($)	SMALL ENTITY ADDITIONAL FEE ($)	OR	OTHER THAN SMALL ENTITY RATE ($)	OTHER THAN SMALL ENTITY ADDITIONAL FEE ($)
Total (37 CFR 1.16(i))	* 52	Minus	** 52	= 0	X $ =		OR	X $62=	0
Independent (37 CFR 1.16(h))	* 4	Minus	***4	= 0	X $ =		OR	X $250=	0
☐ Application Size Fee (37 CFR 1.16(s))									
☐ FIRST PRESENTATION OF MULTIPLE DEPENDENT CLAIM (37 CFR 1.16(j))							OR		
					TOTAL ADD'L FEE		OR	TOTAL ADD'L FEE	0

AMENDMENT	(Column 1) CLAIMS REMAINING AFTER AMENDMENT		(Column 2) HIGHEST NUMBER PREVIOUSLY PAID FOR	(Column 3) PRESENT EXTRA	RATE ($)	ADDITIONAL FEE ($)	OR	RATE ($)	ADDITIONAL FEE ($)
Total (37 CFR 1.16(i))	*	Minus	**	=	X $ =		OR	X $ =	
Independent (37 CFR 1.16(h))	*	Minus	***	=	X $ =		OR	X $ =	
☐ Application Size Fee (37 CFR 1.16(s))									
☐ FIRST PRESENTATION OF MULTIPLE DEPENDENT CLAIM (37 CFR 1.16(j))							OR		
					TOTAL ADD'L FEE		OR	TOTAL ADD'L FEE	

* If the entry in column 1 is less than the entry in column 2, write "0" in column 3.

** If the "Highest Number Previously Paid For" IN THIS SPACE is less than 20, enter "20".

*** If the "Highest Number Previously Paid For" IN THIS SPACE is less than 3, enter "3".

The "Highest Number Previously Paid For" (Total or Independent) is the highest number found in the appropriate box in column 1.

Legal Instrument Examiner:
/DIANIECE JACOBS/

This collection of information is required by 37 CFR 1.16. The information is required to obtain or retain a benefit by the public which is to file (and by the USPTO to process) an application. Confidentiality is governed by 35 U.S.C. 122 and 37 CFR 1.14. This collection is estimated to take 12 minutes to complete, including gathering, preparing, and submitting the completed application form to the USPTO. Time will vary depending upon the individual case. Any comments on the amount of time you require to complete this form and/or suggestions for reducing this burden, should be sent to the Chief Information Officer, U.S. Patent and Trademark Office, U.S. Department of Commerce, P.O. Box 1450, Alexandria, VA 22313-1450. DO NOT SEND FEES OR COMPLETED FORMS TO THIS ADDRESS. **SEND TO: Commissioner for Patents, P.O. Box 1450, Alexandria, VA 22313-1450.**

If you need assistance in completing the form, call 1-800-PTO-9199 and select option 2.

UNITED STATES PATENT AND TRADEMARK OFFICE

UNITED STATES DEPARTMENT OF COMMERCE
United States Patent and Trademark Office
Address: COMMISSIONER FOR PATENTS
P.O. Box 1450
Alexandria, Virginia 22313-1450
www.uspto.gov

APPLICATION NO.	FILING DATE	FIRST NAMED INVENTOR	ATTORNEY DOCKET NO.	CONFIRMATION NO.
12/424,320	04/15/2009	Martin Alles	AND01 082 CONT	1334

79172 7590 07/12/2012
Duane Morris LLP
505 9th Street, N.W.
Suite 1000
Washington, DC 20004

EXAMINER
PHAN, DAO LINDA

ART UNIT	PAPER NUMBER
3646	

MAIL DATE	DELIVERY MODE
07/12/2012	PAPER

Please find below and/or attached an Office communication concerning this application or proceeding.

The time period for reply, if any, is set in the attached communication.

Office Action Summary	Application No.	Applicant(s)	
	12/424,320	ALLES ET AL.	
	Examiner	Art Unit	
	Dao Phan	3646	

-- The MAILING DATE of this communication appears on the cover sheet with the correspondence address --

Period for Reply

A SHORTENED STATUTORY PERIOD FOR REPLY IS SET TO EXPIRE 3 MONTH(S) OR THIRTY (30) DAYS, WHICHEVER IS LONGER, FROM THE MAILING DATE OF THIS COMMUNICATION.

- Extensions of time may be available under the provisions of 37 CFR 1.136(a). In no event, however, may a reply be timely filed after SIX (6) MONTHS from the mailing date of this communication.
- If NO period for reply is specified above, the maximum statutory period will apply and will expire SIX (6) MONTHS from the mailing date of this communication.
- Failure to reply within the set or extended period for reply will, by statute, cause the application to become ABANDONED (35 U.S.C. § 133). Any reply received by the Office later than three months after the mailing date of this communication, even if timely filed, may reduce any earned patent term adjustment. See 37 CFR 1.704(b).

Status

1)☒ Responsive to communication(s) filed on *18 April 2012*.

2a)☐ This action is **FINAL**. 2b)☒ This action is non-final.

3)☐ An election was made by the applicant in response to a restriction requirement set forth during the interview on _____; the restriction requirement and election have been incorporated into this action.

4)☐ Since this application is in condition for allowance except for formal matters, prosecution as to the merits is closed in accordance with the practice under *Ex parte Quayle*, 1935 C.D. 11, 453 O.G. 213.

Disposition of Claims

5)☒ Claim(s) *1-52* is/are pending in the application.

5a) Of the above claim(s) _____ is/are withdrawn from consideration.

6)☒ Claim(s) *15-28* is/are allowed.

7)☒ Claim(s) *1-14 and 29-52* is/are rejected.

8)☐ Claim(s) _____ is/are objected to.

9)☐ Claim(s) _____ are subject to restriction and/or election requirement.

Application Papers

10)☐ The specification is objected to by the Examiner.

11)☐ The drawing(s) filed on _____ is/are: a)☐ accepted or b)☐ objected to by the Examiner.

Applicant may not request that any objection to the drawing(s) be held in abeyance. See 37 CFR 1.85(a).

Replacement drawing sheet(s) including the correction is required if the drawing(s) is objected to. See 37 CFR 1.121(d).

12)☐ The oath or declaration is objected to by the Examiner. Note the attached Office Action or form PTO-152.

Priority under 35 U.S.C. § 119

13)☐ Acknowledgment is made of a claim for foreign priority under 35 U.S.C. § 119(a)-(d) or (f).

a)☐ All b)☐ Some * c)☐ None of:

1.☐ Certified copies of the priority documents have been received.

2.☐ Certified copies of the priority documents have been received in Application No. _____.

3.☐ Copies of the certified copies of the priority documents have been received in this National Stage application from the International Bureau (PCT Rule 17.2(a)).

* See the attached detailed Office action for a list of the certified copies not received.

Attachment(s)

1) ☐ Notice of References Cited (PTO-892)

2) ☐ Notice of Draftsperson's Patent Drawing Review (PTO-948)

3) ☒ Information Disclosure Statement(s) (PTO/SB/08) Paper No(s)/Mail Date _____.

4) ☐ Interview Summary (PTO-413) Paper No(s)/Mail Date. _____ .

5) ☐ Notice of Informal Patent Application

6) ☐ Other: _____.

1) 35 U.S.C. 101 reads as follows:

> Whoever invents or discovers any new and useful process, machine, manufacture, or composition of matter, or any new and useful improvement thereof, may obtain a patent therefor, subject to the conditions and requirements of this title.

2) Claims 1-14, 29-52 are rejected under 35 U.S.C. 101 because the claimed invention is directed to non-statutory subject matter.

The claims are directed to a method for the purposes of § 101. To qualify as statutory subject matter, a claimed method must either: (1) be tied to another statutory class (such as a particular apparatus) or (2) transform underlying subject matter (such as an article or materials). Diamond v. Diehr, 450 U.S. 175, 184 (1981); Parker v. Flook, 437 U.S. 584,588 n.9 (1978); Gottschalk v. Benson, 409 U.S. 63, 70 (1972). Thus, to qualify as patent eligible, the method must positively recite the other statutory class to which it is tied (e.g., by identifying the apparatus that accomplishes the method steps), or positively recite the subject matter that is being transformed (e.g., by identifying the product or material that is changed to a different state).

Claims 1-14, 29-52 identify neither the apparatus performing the recited steps nor any transformation of underlying materials, and accordingly are directed to non-statutory subject matter.

3) Any inquiry concerning this communication or earlier communications from the examiner should be directed to Dao Phan whose telephone number is (571)272-6976. The examiner can normally be reached on M-F 9:00-5:30.

If attempts to reach the examiner by telephone are unsuccessful, the examiner's supervisor, Jack Keith can be reached on (571)272-6878. The fax

phone number for the organization where this application or proceeding is assigned is 571-273-8300.

Information regarding the status of an application may be obtained from the Patent Application Information Retrieval (PAIR) system. Status information for published applications may be obtained from either Private PAIR or Public PAIR. Status information for unpublished applications is available through Private PAIR only. For more information about the PAIR system, see http://pair-direct.uspto.gov. Should you have questions on access to the Private PAIR system, contact the Electronic Business Center (EBC) at 866-217-9197 (toll-free). If you would like assistance from a USPTO Customer Service Representative or access to the automated information system, call 800-786-9199 (IN USA OR CANADA) or 571-272-1000.

/Dao Phan/
Primary Examiner, Art Unit 3646

Doc code: IDS
Doc description: Information Disclosure Statement (IDS) Filed

PTO/SB/08a (01-10)
Approved for use through 07/31/2012. OMB 0651-0031
U.S. Patent and Trademark Office; U.S. DEPARTMENT OF COMMERCE
Under the Paperwork Reduction Act of 1995, no persons are required to respond to a collection of information unless it contains a valid OMB control number.

INFORMATION DISCLOSURE STATEMENT BY APPLICANT (**Not for submission under 37 CFR 1.99)**	Application Number	12424320
	Filing Date	2009-04-15
	First Named Inventor	Alles, et al.
	Art Unit	3662
	Examiner Name	Phan, Dao Linda
	Attorney Docket Number	AND01 082 CONT

U.S.PATENTS

Examiner Initial*	Cite No	Patent Number	Kind Code[1]	Issue Date	Name of Patentee or Applicant of cited Document	Pages,Columns,Lines where Relevant Passages or Relevant Figures Appear
	1					

If you wish to add additional U.S. Patent citation information please click the Add button.

U.S.PATENT APPLICATION PUBLICATIONS

Examiner Initial*	Cite No	Publication Number	Kind Code[1]	Publication Date	Name of Patentee or Applicant of cited Document	Pages,Columns,Lines where Relevant Passages or Relevant Figures Appear
	1					

If you wish to add additional U.S. Published Application citation information please click the Add button.

FOREIGN PATENT DOCUMENTS

Examiner Initial*	Cite No	Foreign Document Number[3]	Country Code[2] i	Kind Code[4]	Publication Date	Name of Patentee or Applicant of cited Document	Pages,Columns,Lines where Relevant Passages or Relevant Figures Appear	T[5]
	1	06-347529	JP		1994-12-22	NEC CORP		☐
	2	06/088472	WO		2006-08-24	Anderson, Robert, J		☐

If you wish to add additional Foreign Patent Document citation information please click the Add button

NON-PATENT LITERATURE DOCUMENTS

053 ALL REFERENCES CONSIDERED EXCEPT WHERE LINED THROUGH. /D.P./

INFORMATION DISCLOSURE STATEMENT BY APPLICANT (Not for submission under 37 CFR 1.99)		
	Application Number	12424320
	Filing Date	2009-04-15
	First Named Inventor	Alles, et al.
	Art Unit	3662
	Examiner Name	Phan, Dao Linda
	Attorney Docket Number	AND01 082 CONT

Examiner Initials*	Cite No	Include name of the author (in CAPITAL LETTERS), title of the article (when appropriate), title of the item (book, magazine, journal, serial, symposium, catalog, etc), date, pages(s), volume-issue number(s), publisher, city and/or country where published.	T[5]
✓	1	Y. ZHAO, "Standardization of Mobile Phone Positioning for 3G Systems," IEEE Communications Magazine, July 2002, D pp.108-116.	☐
✓	2	C. DRANE, M. MACNAUGHTAN, and C. SCOTT, "Positioning GSM Telephones," IEEE Communications Magazine, April1998, pp.46-54, 59.	☐
✓	3	J. CAFFERY, JR., and G. STUBER, "Overview of Radiolocation in COMA Cellular Systems," IEEE Communications Magazine, April 1998, pp.38-45.	☐
✓	4	T. RAPPAPORT, J.H. REED and B.D. WOERNER, "Position Location Using Wireless Communications on Highways of the Future, IEEE Communications Magazine, October 1996, pp.33-41.	☐
✓	5	I. ZISKIND and M. WAX, "Maximum Likelihood Localization of Multiple Sources by Alternating Projection," IEEE Transactions on Acoustics, Speech, and Signal Porcessing, Volume 36, No. 10, pp.1553-1560, October 1988.	☐
✓	6	G.W.K. COLMAN, "A Comparison of the Accuracy of TDOA and TOA Location Algorithms with Equivalent Receiver Geometry," Defence R&D Canada Technical Memorandum (DREO TM 2001-063), October 2001, pp.1-53	☐
✓	7	L. MAILAENDER, "On the Geolocation Bounds for Round-Trip Time-of-Arrival and All Non-Line-of-Sight Channels", EURASIP Journal on Advances in Signal Processing, Volume 2008, pp.1-10	☐
✓	8	N. AGARWAL, L. CHAUDRAN-WADI, andV. APTE, "Capacity Analysis of the GSM Short Message Service", Indian Institute ofTechnology Bombay, www.cse.iitb.ac.inl-varsha/allpapers/wireless/ncc03cam.pdf, 2004, pp.1-5	☐
✓	9	J.D. BARD, and F.M. HAM, 'Time Difference of Arrival Dilution of Precision and Applications," IEEE Transactions on Signal Processing, Volume 47, No.2, pp.521-523, February 1999.	☐
✓	10	K.C. HO, and W. XU, "An Accurate Algebraic Solution for Moving Source Location Using TDOA and FDOA Measurements", IEEE Transactions on Signal Processing, Volume 52, No.9 •. September 2004, pp.2453-2463	☐

054 ALL REFERENCES CONSIDERED EXCEPT WHERE LINED THROUGH. /D.P./

INFORMATION DISCLOSURE STATEMENT BY APPLICANT (Not for submission under 37 CFR 1.99)		
	Application Number	12424320
	Filing Date	2009-04-15
	First Named Inventor	Alles, et al.
	Art Unit	3662
	Examiner Name	Phan, Dao Linda
	Attorney Docket Number	AND01 082 CONT

	11	C.H. KNAPP and G.C. CARTER, "The Generalized Correlation Method for Estimation of Time Delay," IEEE Transactions on Acoustics, Speech, and Signal Processing, Volume ASSP-24, No. 4, August 1976, pp.320-327	☐
	12	M. RAHNEMA, "Overview of the GSM System and Protocol Architecture," IEEE Communications Magazine, April 1993, pp.92-100	☐
	13	S. STEIN, "Algorithms for Ambiguity Function Processing," IEEE Transactions on Acoustics, Speech, and Signal Processing, Volume ASSP-29, No.3, June 1981, pp.588-599	☐
	14	M. VANDERVEEN, C. B. PAPADIAS, and A. PAULRAJ, "Joint Angle and Delay Estimation (JADE) for Multipath Signals Arriving at an Antenna Array", IEEE Communications Letters, Volume 1, No. 1, January 1997, pp.12-14	☐
	15	M. WAX and I. ZISKIND, "On Unique Localization of Multiple Sources by Passive Sensor Arrays," IEEE Transactions on Acoustics, Speech, and Signal Processing, Volume 37, No.7, July 1989, pp.996-1000	☐
	16	B. YANG, "Projection Approximation Subspace Tracking," IEEE Transactions on Signal Processing, Volume 43, No.1, January 1995, pp.95-107	☐
	17	A.J. PAULRAJ, C.B. PAPADIAS, "Space-Time Processing for Wireless Communications", IEEE Signal Processing Magazine, Vol. 11, November 1997, pp.49-83	☐
	18	C.B. PAPADIAS, A.J. PAULRAJ , "Space-Time Signal Processing for Wireless Communications: A Survey", Information Systems Laboratory, Stanford University	☐
	19	M. HAARDT, C. BRUNNER, J. NOSSEK, "Joint Estimation of 2-D Arrival Angles, Propagation Delays, and Doppler Frequencies in Wireless Communications," Proc. IEEE Digital Signal Processing Workshop, Volume 1, pages 1-4, Bryce Canyon National Park, Utah, August 1998	☐
	20	MATI WAX, "Position Location from Sensors with Position Uncertainty," IEEE Transactions Aerospace and Electronic Systems, Volume AES-19, No.5, September 1983, pp.658-662	☐
	21	D.J. TORRIERI, "Statistical Theory of Passive Location Systems", IEEE Transactions Aerospace and Electronic Systems, Volume AES-20, No. 2, March 1984, pp.183-198	☐

ALL REFERENCES CONSIDERED EXCEPT WHERE LINED THROUGH. /D.P./

INFORMATION DISCLOSURE STATEMENT BY APPLICANT (Not for submission under 37 CFR 1.99)		
	Application Number	12424320
	Filing Date	2009-04-15
	First Named Inventor	Alles, et al.
	Art Unit	3662
	Examiner Name	Phan, Dao Linda
	Attorney Docket Number	AND01 082 CONT

	22	Y.T. CHAN and K.C. HO, "A Simple and Efficient Estimator for Hyperbolic Location", IEEE Transactions Signal Processing, Volume 42, No. 8, August 1994, pp.1905-1915	☐
	23	W.H. FOY, "Position-Location Solutions by Taylor-Series Estimation", IEEE Transactions Aerospace and Electronic Systems, Volume AES-12, No.2, March 1976, pp.187-194	☐
	24	R.G. STANSFIELD, "Statistical Theory of OF Fixing", Journal IEE 94, Part III A, October 1947, pp.762-770	☐
	25	M.P. WYLIE and J. HOLTZMAN, "The Non-Line of Sight Problem in Mobile Location Estimation", Process IEEE 5th International Conference on Universal Personal Communications, Vol. 2, October 1996, pp.827-831	☐
	26	L.CONG and W. ZHUANG, "Non-Line-of-Sight Error Mitigation in TDOA Mobile Location", Process IEEE Global Telecommunications Conference, Volume 1, September 2001, pp.680-684	☐
	27	P.C. CHEN, "A Non-Line-of-Sight Error Mitigation Algorithm in Location Estimation", Process IEEE Conference on Wireless Communications Networking, Volume 1, 1999, pp.316-320	☐
	28	N.J. THOMAS, D.G.M. CRUICKSHANK and D. I. LAURENSON, "Performance of a TDOA-AOA Hybrid Mobile Location System", 3G Mobile Communication Technologies, Conference Publication No. 477, March 2001, pp.216-220	☐
	29	J. CAFFERY, JR., and G. STUBER, "Subscriber Location in COMA Cellular Networks," IEEE Transactions on Vehicular Technology, Volume 47, No.2, May 1998, pp.406-416	☐
	30	M.SILVENTOINEN and T. RANTALAINEN, "Mobile Station Emergency Locating in GSM", Process IEEE International D Conference, Personal Wireless Communications, Volume 1, 1996, pp.232-238.	☐
	31	AMIR LESHEM, MATI WAX, "Array Calibration in the Presence of Multipath," IEEE Transactions on Signal Processing, Vol. 48, No. 1, pp.53-59, January 2000	☐
	32	XIN WANG, ZONGXIN WANG and BOB O'DEA, "A TOA-Based Location Algorithm Reducing the Errors Due to Non-Line-of-Sight (NLOS) Propagation," IEEE Trans. Vehicular Technology, Vol. 52, No.1, January 2003, pp.112-116	☐

 ALL REFERENCES CONSIDERED EXCEPT WHERE LINED THROUGH. /D.P./

INFORMATION DISCLOSURE STATEMENT BY APPLICANT (Not for submission under 37 CFR 1.99)		
	Application Number	12424320
	Filing Date	2009-04-15
	First Named Inventor	Alles, et al.
	Art Unit	3662
	Examiner Name	Phan, Dao Linda
	Attorney Docket Number	AND01 082 CONT

	33	M. VANDERVEEN, C. PAPADIAS, A. PAULRAJ, "Joint Angle and Delay Estimation (JADE) for Multipath Signals Arriving at an Antenna Array," IEEE Communications Letters, Vol. 1, No.1, January 1997, pp.12-14	☐
	34	R. SCHMIDT, "Multiple Emitter Location and Signal Parameter Estimation," IEEE Transactions on Antennas and Propagation, Vol. AP-34, No. 3, March 1986, pp.276-280	☐
	35	Y. CHEN, M. ZOLTOWSKI, "Joint Angle and Delay Estimation for DS-CDMA with Application to Reduced Dimension Space-Time Rake Receivers," March 1999, pp.2933-2936	☐

If you wish to add additional non-patent literature document citation information please click the Add button

EXAMINER SIGNATURE

Examiner Signature	/Dao Phan/	Date Considered	06/18/2012

*EXAMINER: Initial if reference considered, whether or not citation is in conformance with MPEP 609. Draw line through a citation if not in conformance and not considered. Include copy of this form with next communication to applicant.

[1] See Kind Codes of USPTO Patent Documents at www.USPTO.GOV or MPEP 901.04. [2] Enter office that issued the document, by the two-letter code (WIPO Standard ST.3). [3] For Japanese patent documents, the indication of the year of the reign of the Emperor must precede the serial number of the patent document. [4] Kind of document by the appropriate symbols as indicated on the document under WIPO Standard ST.16 if possible. [5] Applicant is to place a check mark here if English language translation is attached.

ALL REFERENCES CONSIDERED EXCEPT WHERE LINED THROUGH. /D.P./

INFORMATION DISCLOSURE STATEMENT BY APPLICANT (Not for submission under 37 CFR 1.99)		
	Application Number	12424320
	Filing Date	2009-04-15
	First Named Inventor	Alles, et al.
	Art Unit	3662
	Examiner Name	Phan, Dao Linda
	Attorney Docket Number	AND01 082 CONT

CERTIFICATION STATEMENT

Please see 37 CFR 1.97 and 1.98 to make the appropriate selection(s):

☐ That each item of information contained in the information disclosure statement was first cited in any communication from a foreign patent office in a counterpart foreign application not more than three months prior to the filing of the information disclosure statement. See 37 CFR 1.97(e)(1).

OR

☐ That no item of information contained in the information disclosure statement was cited in a communication from a foreign patent office in a counterpart foreign application, and, to the knowledge of the person signing the certification after making reasonable inquiry, no item of information contained in the information disclosure statement was known to any individual designated in 37 CFR 1.56(c) more than three months prior to the filing of the information disclosure statement. See 37 CFR 1.97(e)(2).

☐ See attached certification statement.

☐ The fee set forth in 37 CFR 1.17 (p) has been submitted herewith.

☒ A certification statement is not submitted herewith.

SIGNATURE

A signature of the applicant or representative is required in accordance with CFR 1.33, 10.18. Please see CFR 1.4(d) for the form of the signature.

Signature	/Mark C. Comtois/	Date (YYYY-MM-DD)	2012-04-18
Name/Print	Mark C. Comtois	Registration Number	46285

This collection of information is required by 37 CFR 1.97 and 1.98. The information is required to obtain or retain a benefit by the public which is to file (and by the USPTO to process) an application. Confidentiality is governed by 35 U.S.C. 122 and 37 CFR 1.14. This collection is estimated to take 1 hour to complete, including gathering, preparing and submitting the completed application form to the USPTO. Time will vary depending upon the individual case. Any comments on the amount of time you require to complete this form and/or suggestions for reducing this burden, should be sent to the Chief Information Officer, U.S. Patent and Trademark Office, U.S. Department of Commerce, P.O. Box 1450, Alexandria, VA 22313-1450. DO NOT SEND FEES OR COMPLETED FORMS TO THIS ADDRESS. **SEND TO: Commissioner for Patents, P.O. Box 1450, Alexandria, VA 22313-1450.**

058 ALL REFERENCES CONSIDERED EXCEPT WHERE LINED THROUGH. /D.P./

IN THE UNITED STATES PATENT AND TRADEMARK OFFICE

In re the Patent Application of Martin Alles, et al.

Serial No.:	12/424,320	Art Unit:	3662
Filed:	April 15, 2009	Examiner:	Dao Linda Phan

Title: METHOD TO MODIFY CALIBRATION DATA USED TO LOCATE A MOBILE UNIT

AMENDMENT

Commissioner for Patents
P.O. Box 1450
Alexandria, Virginia 22313-1450

Sir:

Responsive to the Office Action mailed April 9, 2012, Applicant submits the following amendment and remarks.

Applicant's **Amendment to the Specification** begins on Page 2 of this paper.

Applicant's **Remarks** begin on Page 3 of this paper.

Amendment to the Specification:

Please amend paragraphs [0066] and [0067] of the specification as shown below. Applicant has inserted periods at the end of the listed paragraphs as requested by the Office. No new matter has been added.

[0066] FIG 8 is another illustration of an embodiment of the present subject matter. A database of previously-gathered calibration data for a predetermined region in a wireless network may be provided (operation 801). Observed network measurement data may be collected which includes a first signal characteristic from the mobile's serving transmitter (operation 803). The observed network measurement data may be modified as a function of the first signal characteristic (operation 805), for example the first signal characteristic may be received power and the modification may be a function of the relative value with respect to the received power. The modified network measurement data may be compared with the database of calibration data to determine the location of the mobile station (operation 807).

[0067] FIG 9 is an illustration of an embodiment of the present subject matter for determining a location of a mobile station. A database of calibration data for a region may be provided (901). Network measurement data from transmitters may be observed and collected including a signal characteristic from each of the transmitters (operation 903). An average value for the signal characteristic among the transmitters may be determined (operation 905). The average for the signal characteristic may be a weighted average. The observed network measurement data may be modified using the determined average value (operation 907) and the modified network measurement data may be compared with the database of calibration data to determine the location of the mobile station (operation 909).

Remarks

Applicant acknowledges the allowance of Claims 1-52.

Objection to the specification

Applicant has amended paragraphs [0066] and [0067] of the specification to correct informalities identified by the Office. No new matter has been added. Reconsideration and withdrawal of the objection to the specification is respectfully solicited.

Applicant respectfully submits that the application is in condition for allowance and a notice to this effect is respectfully requested.

The Office is requested and hereby authorized to charge any required extension-of-time fees against Deposit Account Number 04-1679 to Duane Morris LLP.

If any point remains that is deemed best resolved through a telephonic conversation, the Office is hereby requested to contact the undersigned directly.

Respectfully submitted,

/Mark C. Comtois

Mark C. Comtois Reg. No. 46,285
Ryan T. Hardee Reg. No. 57,515

DUANE MORRIS LLP
505 9th Street N.W., Suite 1000
Washington, D.C. 20004
Telephone: (202) 776-7800
Telecopier: (202) 776-7801
Dated: April 18, 2012

(12) INTERNATIONAL APPLICATION PUBLISHED UNDER THE PATENT COOPERATION TREATY (PCT)

(19) World Intellectual Property Organization
International Bureau

(43) International Publication Date
24 August 2006 (24.08.2006)

PCT

(10) International Publication Number
WO 2006/088472 A1

(51) International Patent Classification:
H04Q 7/20 (2006.01)

(21) International Application Number:
PCT/US2005/014188

(22) International Filing Date: 25 April 2005 (25.04.2005)

(25) Filing Language: English

(26) Publication Language: English

(30) Priority Data:
60/652,265 11 February 2005 (11.02.2005) US

(71) Applicant *(for all designated States except US)*: TRUE-POSITION, INC. [US/US]; 1000 Chesterbrook Blvd., Third Floor, Berwyn, PA 19312 (US).

(72) Inventors; and
(75) Inventors/Applicants *(for US only)*: ANDERSON, Robert, J. [US/US]; 50 Guilford Circle, Phoenixville, PA 19460-2663 (US). SHEEHAN, Joseph, W. [US/US]; 26 Cantor Drive, Newtown Square, PA 19073 (US). BULL, Jeffrey, F. [US/US]; 100 Aspen Court, Chalfont, PA 18914 (US). COHEN, Benjamin, Herman [US/US]; 102 Crestside Way, Malvern, PA 19355 (US).

(74) Agent: STEIN, Michael, D.; Woodcock Washburn LLP, One Liberty Place, 46th Floor, Philadelphia, PA 19103 (US).

(81) Designated States *(unless otherwise indicated, for every kind of national protection available)*: AE, AG, AL, AM, AT, AU, AZ, BA, BB, BG, BR, BW, BY, BZ, CA, CH, CN, CO, CR, CU, CZ, DE, DK, DM, DZ, EC, EE, EG, ES, FI, GB, GD, GE, GH, GM, HR, HU, ID, IL, IN, IS, JP, KE, KG, KM, KP, KR, KZ, LC, LK, LR, LS, LT, LU, LV, MA, MD, MG, MK, MN, MW, MX, MZ, NA, NI, NO, NZ, OM, PG, PH, PL, PT, RO, RU, SC, SD, SE, SG, SK, SL, SM, SY, TJ, TM, TN, TR, TT, TZ, UA, UG, US, UZ, VC, VN, YU, ZA, ZM, ZW.

(84) Designated States *(unless otherwise indicated, for every kind of regional protection available)*: ARIPO (BW, GH, GM, KE, LS, MW, MZ, NA, SD, SL, SZ, TZ, UG, ZM, ZW), Eurasian (AM, AZ, BY, KG, KZ, MD, RU, TJ, TM), European (AT, BE, BG, CH, CY, CZ, DE, DK, EE, ES, FI, FR, GB, GR, HU, IE, IS, IT, LT, LU, MC, NL, PL, PT, RO, SE, SI, SK, TR), OAPI (BF, BJ, CF, CG, CI, CM, GA, GN, GQ, GW, ML, MR, NE, SN, TD, TG).

Declaration under Rule 4.17:
— *of inventorship (Rule 4.17(iv))*

Published:
— *with international search report*

For two-letter codes and other abbreviations, refer to the "Guidance Notes on Codes and Abbreviations" appearing at the beginning of each regular issue of the PCT Gazette.

(54) Title: BASE TRANSCEIVER STATION (BTS) SYNCHRONIZATION

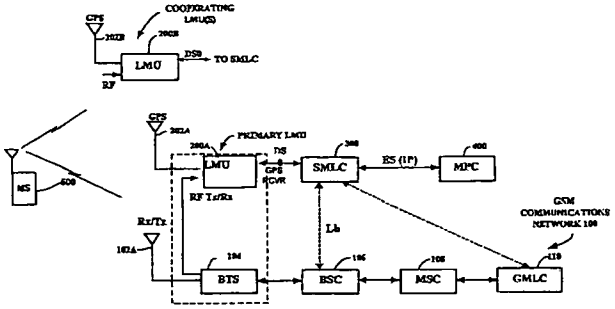

(57) Abstract: In a network overlay wireless location solution for a GSM or UMTS communications network, spectrum utilization can be made far more efficient by synchronizing the BTSs, which can require distributing a timing signal to all BTSs, or installing a satellite-based timing unit in each site. The present invention provides an architecture in which Location Measurement Units (LMUs) are installed at some or all of the BTS sites for the purpose of locating wireless devices. The LMUs are used to measure the timing of various uplink and/or downlink signals in the cellular network in support of various location techniques. These LMUs may include a GPS-based timing reference module, which may be used to synchronize the time bases of all LMUs. To reduce the overall cost of BTS synchronization, the LMU distributes timing signals, including a periodic electrical pulse as well as time description information, on a serial or other interface, which is available for other nodes to use for synchronization. The format of the electrical pulse and time description information is modified through hardware and software to adapt to the various formats required by various BTS types. For example, the BTSs with co-located LMUs can receive a synchronization signal with little or no hardware cost. The External Interface Unit (EIU) described herein may be used to adapt to various BTS hardware formats. For BTS sites not equipped with an LMU, a Timing Measurement Unit (TMU) can be used. The TMU has the single function of providing BTS time signals in the same formats as provided by the LMUs. The time signals provided by the TMUs are synchronous to the signals provided by the LMUs. This timing-only TMU has a lower cost than the LMU because it does not support the uplink or downlink signal measurement functions. This approach allows a cellular operator to synchronize BTSs at a relatively low cost.

WO 2006/088472 A1

BASE TRANSCEIVER STATION (BTS) SYNCHRONIZATION

CROSS REFERENCE

[0001] The present application claims priority to U.S. Provisional Application No. 60/652,265, filed on February 11, 2005, entitled "Base Transceiver Station (BTS) Synchronization," which is hereby incorporated by reference in its entirety.

FIELD OF THE INVENTION

[0002] The present invention relates generally to the field of wireless location and associated wireless communications systems, and more particularly, but not exclusively, to a system for synchronizing Base Transceiver Stations (BTSs) of a GSM or UMTS network coupled with an overlay wireless location system (WLS).

BACKGROUND OF THE INVENTION

[0003] The present invention is especially suited, but not necessarily limited to, use with GSM and UMTS systems and the like. GSM stands for Global System for Mobile communication and is a digital mobile telephone system widely used in Europe and other parts of the world, whereas UMTS stands for Universal Mobile Telecommunications System and is a third-generation (3G) broadband system based on the GSM standard. This specification describes systems and methods to provide Global Positioning System (GPS)-derived timing information to base stations of a wireless communications system, for the purposes of network synchronization. For example, GSM network synchronization can benefit a wireless carrier in several ways. In unsynchronized GSM networks, the co-channel interference created by frequency reuse can be reduced by synchronization. A reduced noise/co-channel interference level allows for tighter frequency reuse patterns, thus allowing the carrier to increase system capacity (e.g., Erlang capacity) or improve voice/data quality.

SUMMARY OF THE INVENTION

[0004] The following statements summarize several important aspects of the present invention, which are described in greater detail herein:

1. In a network overlay wireless location solution for a wireless communications system comprising a network of Base Transceiver Stations (BTSs),

for example GSM or UMTS communications network, a method and system of improving spectrum by synchronizing the BTSs.

2. A method and system as recited above, wherein a timing signal is provided to each BTS by either a Location Measurement Unit (LMU) or a Timing Measurement Unit (TMU).

3. A method and system as recited above, wherein each LMU and TMU comprises a GPS-based timing reference module and means for generating a periodic timing signal which is synchronized within a pre-specified degree of accuracy with the timing signals generated by each other LMU and TMU.

4. A method and system as recited above, wherein the LMUs are used to measure the timing of various uplink and/or downlink signals in the cellular network in support of various location techniques.

5. A method and system as recited above, wherein the LMUs and TMUs distribute timing signals, including a periodic electrical pulse as well as time description information.

6. A method and system as recited above, wherein the format of the electrical pulse and time description information are modified through hardware and software to adapt to the various formats required by various BTS types.

7. A method and system as recited above, wherein the BTSs with co-located LMUs receive a synchronization signal with little or no hardware cost, and wherein BTS sites not equipped with an LMU are equipped with TMU that has the single function of providing BTS time signals in the same formats as provided by the LMUs, wherein the time signals provided by the TMUs are synchronized to the signals provided by the LMUs and the timing-only TMU has a lower cost than the LMU because it does not support uplink or downlink signal measurement functions.

[0005] It should be noted that the concept of the time signals being "synchronized" is not limited to signals of substantially identical shape or occurring simultaneously. For example, two signals may be considered sufficiently synchronized, for the purposes of the present invention, where they are offset in time but have a known relationship.

BRIEF DESCRIPTION OF THE DRAWINGS

[0006] Figure 1 schematically depicts an illustrative embodiment of an emergency-only overlay location solution.

[0007] Figure 2 depicts several ways of deploying base station synchronization products (LMUs and TMUs) in accordance with the present invention.

[0008] Figure 3 depicts an illustrative embodiment of a TMU's internal architecture and external interface.

[0009] Figure 4 depicts an illustrative relationship between a 1 PPS timing signal and synchronization data.

[0010] Figure 5 depicts an exemplary GSM/UMTS network including a mixture of synchronized/location-enabled BTSs and synchronized/not location-enabled BTSs.

[0011] Figure 6 depicts an exemplary architecture of an External Interface Unit (EIU).

DETAILED DESCRIPTION OF ILLUSTRATIVE EMBODIMENTS

1. Overview

[0012] The present invention is particularly suited for use in connection with a network overlay solution for a GSM communications network. The GSM network is specified by the European Telecommunications Standards Institute (ETSI) and extended by the 3rd Generation Partnership Project (3GPP). In a fully integrated, GSM specification-compliant Location Services solution, the SMLC (Serving Mobile Location Center) depends on the existing BSC (Base Station Controller) or PCU (Packet Control Unit) to provide RF assignment information for the MS (Mobile Station, i.e., the mobile unit to be located). By modifying the LMU to monitor the uplink and or downlink control channels, it is possible to implement an emergency-only overlay location solution that satisfies the FCC's E911 mandate and does not require any modifications to the existing GSM handsets or network. An exemplary architecture for such a solution is illustrated in Figure 1. (For further information about this architecture, see U.S. Patent Application No. 20040203429, filed on September 3, 2002 and published on October 14, 2004, "E911 Overlay Solution for GSM, for Use in a Wireless Location System.")

[0013] As shown in Figure 1, the E911 overlay solution comprises the following elements:

1. A GSM communications network 100, including receive/transmit antennae 102A coupled to a Base Transceiver Station (BTS) 104; a Base Station

Controller (BSC) 106; a Mobile Switching Center (MSC) 108; and a Gateway Mobile Location Center (GMLC) 110. All of these components and subsystems are well known in the art. See, e.g., 3GPP TS 03.71 V8.6.0 (2002-06).

2. A Location Measuring Unit (LMU) 200A, which as indicated by the dashed line may be co-located with the BTS 104, so as to share antennae 102A for receiving RF signals from the Mobile Stations. The LMU 202A may include an internal GPS receiver and so a GPS antenna 202A may also be provided. The LMU may also provide the ability to monitor and demodulate the forward channel signals transmitted by the BTS to the MS. This forward link monitor port may be connected to a separate antenna, or directly to the BTS forward link path. In addition, the system may be configured such that, for a given call, there will be a Primary LMU, in this case LMU 200A, and one or more Cooperating LMUs, e.g., the LMU designated 200B. The Cooperating LMUs are generally configured the same as the Primary LMU, and so they are coupled to a GPS antenna 202B and are typically co-located with a BTS.

3. The LMUs are coupled to a Serving Mobile Location Center (SMLC) 300, which in turn is coupled to a Gateway Mobile Location Center (GMLC) or Mobile Positioning Center (MPC) 400. The concept of the LMU, SMLC, GMLC, and MPC are well known, as can be seen from the above-cited GSM specification documents.

4. Figure 1 also shows a Mobile Station 500. Of course, there will typically be many such units in operation within a geographic region, and more than one may be engaged in an emergency call at a given time.

[0014] In a cellular/wireless system, such as GSM or UMTS system, spectrum utilization can be made far more efficient by synchronizing the BTSs. For example, 10-20% more voice calls per unit bandwidth can be achieved through BTS synchronization. Synchronizing a large number of BTSs in a network to an adequate level of accuracy is difficult and requires distributing a timing signal to all BTSs, or installing a satellite-based timing unit in each site. Satellite-based timing units are expensive and take up precious power and space at the BTS sites.

[0015] The present invention provides an architecture in which Location Measurement Units (LMUs) are installed at some or all of the BTS sites for the purpose of locating wireless devices. The LMUs are used to measure the timing of

various uplink and/or downlink signals in the cellular network in support of various location techniques. These LMUs may include a GPS-based timing reference module, which is used to synchronize the time bases of all LMUs. This allows relative time difference measurements to be made in support of location.

[0016] To reduce the overall cost of BTS synchronization, the LMU distributes timing signals, including a periodic electrical pulse as well as time description information, on a serial or other interface, which is available for other nodes to use for synchronization. The format of the electrical pulse and time description information is modified through hardware and software to adapt to the various formats required by various BTS types. For example, the BTSs with co-located LMUs can receive a synchronization signal with little or no hardware cost. The EIU described later is used to adapt to various BTS hardware formats.

[0017] Not all BTS sites will be equipped with the LMUs. For those sites without an LMU, a Timing Measurement Unit (TMU) can be used. The TMU has the single function of providing BTS time signals in the same formats as provided by the LMUs. The time signals provided by the TMUs are synchronous to the signals provided by the LMUs. This timing-only TMU has a lower cost than the LMU because it does not support the uplink or downlink signal measurement functions. This set of products allows a cellular operator (wireless carrier) to synchronize the BTSs at a relatively low cost.

2. BTS Synchronization

[0018] In accordance with the present invention, the LMUs may contain a high performance GPS receiver to provide a common high accuracy timing reference for all LMUs within the location system. The GPS receiver can provide a timing reference to a co-located base station for the purposes of synchronizing the base station network, i.e., to synchronize the BTSs to within a specified degree of precision. In one exemplary implementation of the invention, the LMU contains a network synchronization interface that may be adapted to be compatible with the corresponding interface on the associated BTS. Thus, through the addition of software modifications, the existing LMUs can be upgraded to a configuration compatible with the BTS interface. This software upgrade is termed the BSS Timing Option (BTO), and can be installed into existing LMU/ BTS installations and shipped with new LMUs.

[0019] For BTS sites without an installed LMU, a Timing Measurement Unit (TMU) may be employed. The TMU contains a GPS receiver and necessary software to conform to the BTS timing interface. A market can contain a mix of LMUs with BTO and TMU timing modules or the carrier may elect to use only the TMU to synchronize markets where LMUs are not yet installed.

[0020] The Timing Measuring Unit is a standalone product that can be deployed independent of the Wireless Location Systems. The TMU contains a built-in GPS receiver, including GPS antenna, for the purpose of establishing precise timestamps. The clocking output includes a 1 pulse per second (PPS) signal and timing information. The TMU provides data in a pre-specified ASCII format developed for use with the particular BTS equipment deployed.

[0021] TruePosition base station synchronization products can be employed in several ways, as recited below and depicted in Figure 2:

1. In green-field deployments which have neither location nor synchronization capability.
2. When upgrading an already synchronized BTS to include location capability.
3. When upgrading a location-enabled BTS to incorporate synchronization.

3. Timing Measurement Unit (illustrative embodiment)

[0022] To enable synchronized GSM operation by the wireless carrier, a TMU can be deployed to provide a periodic signal and related timing data information to the BTSs. The TMU preferably includes a GPS receiver designed to provide this periodic signal and related timing data information to the BTS over, e.g., an RS-422 communications interface.

[0023] In one exemplary embodiment, the TMU is a standalone device containing a GPS receiver/engine (GPS), an 80C51 microcontroller (C51), a serial interface for supplying timing information to a BTS, and a console interface. The purpose of the TMU is to obtain accurate time information from the GPS and supply it to the BTS. Timing is provided to the BTS in the form of a pulse per second (PPS) signal that is preceded by a serial message announcing the precise time at the rising edge of the pulse.

[0024] The TMU attempts to maximize the amount of time that it can supply accurate timing information to the BTS. To this end, the TMU takes measures to bring the GPS on-line as quickly as possible after a power outage and to keep it on-line whenever possible.

[0025] To support maintenance and test, the TMU has three modes of operation, boot mode, test mode and operational mode. Boot mode allows the TMU firmware to be updated after production. Test mode supports testing and diagnostics of the TMU hardware platform. Operational mode provides the primary TMU functionality of supplying timing to the BTS.

[0026] The TMU provides synchronization information as described above for two primary reasons:

1) When an LMU is not present in the BTS. When an LMU is present, synchronization information is provided by the LMU through an External Interface Unit (EIU). The External Interface Unit takes the 1 PPS signal and related timing information signal and converts both signals to an RS-422 communication format for interface to the BTS.
2) When an LMU is deployed with equipment already utilizing its signal output capability, such that is it unable to provide the timing signals.

[0027] Figure 3 shows an illustrative embodiment of the TMU internal architecture and external interfaces. The received GPS satellite signal is input to the TMU internal GPS receiver. An internal micro-controller provides the following capabilities:

1) Format GPS timing data in a serial format as may be required.
2) TMU firmware upgrade through the external RS-232 Console port.
3) Control the tri-colored LED that indicates TMU health, and synchronization status.
4) Reset capability through a front panel reset switch.

[0028] The 1 PPS signal output from the GPS receiver, and the formatted serial timing data signal output from the micro-controller are both converted to RS-422 signal levels, and output to the BTS. The 1 PPS and serial data signals are fanned out to 4 four ports that comprise a quad output connector. Each output port provides both a 1 PPS and a serial data output in RS-422 signal levels.

[0029] The TMU micro-controller firmware is capable of upgrade through the RS-232 console port.

[0030] The TMU will transmit the synchronization timing data messages, and the 1PPS signal to the BTS in RS-422 signal levels as shown in Figure 3. The synchronization timing data interface to the BTS may be a serial communications link.

[0031] The 1 PPS signals distributed by the TMU at each of the 4 output ports may have a frequency of 1 Hz and an accuracy 100 ns RMS with respect to UTC time.

[0032] The serial communications link physical layer is based on a RS-422 UART. Specific characteristics are as follows:

- RS-422 interface with 100 ohm termination in the BTS
- 9600 bits/s
- No parity
- One start bit
- 8 bits data length
- One stop bit

[0033] A RS-422 transmitter in the TMU drives the one PPS signal. The 10 – 90 % rise time may be less than 10 ns at each of the TMU output ports. The BTS may include a built in 100 ohm termination.

[0034] The synchronization data is preceding the one PPS pulse. See Figure 4 for timing details. The arrows in Figure 4 show the rising edge of the PPS pulse-pulse. The data signal containing the timing information is preceding the corresponding PPS-pulse.

[0035] Figure 5 is a schematic diagram showing a GSM or UMTS network in which the BTSs are synchronized using the timing information obtained from an LMU or a TMU. The LMUs may or may not require an EIU, depending on the BTS interface requirements as discussed herein.

TMU Operational Description (illustrative embodiment)

[0036] As discussed, the TMU provides timing for a BTS that will enable the BTS to synchronize its operation with other BTSs in its network. The TMU

derives timing information from its integral GPS receiver and provides the BTS with a PPS signal and *Periodic PPS Report* and *Position Data* messages. The TMU is deployed at locations where there is no LMU present or where timing signals are unavailable from the deployed LMU. Where the LMU is deployed, the LMU can supply the same timing functionality as the TMU by employing an EIU. Synchronized BTSs can increase network capacity through precise management of radio resources.

[0037] The TMU software, in a preferred implementation, supports three modes of operation: *boot mode*, *test mode* and *operational mode*. Although each mode provides a mechanism that allows switching to the others, each mode is independent and mutually exclusive. That is, boot mode does not support test mode functionality, test mode does not support boot mode functionality, neither boot nor test mode provide any operational functionality, and operational mode does not support any functionality of the other two modes.

[0038] To utilize the functionality of any mode, the TMU must first be switched to that mode by an appropriate mechanism (usually a console command). Once switched into a particular mode, it is understood that the functionality of the other modes is unavailable. For example, when switched to test mode, the time synchronization to the BTS is disabled since this functionality is only supported by operational mode. BTS timing synchronization cannot be resumed until the TMU is returned to operational mode.

[0039] Certain conditions can prevent the switching from one mode to another. For example, it is not possible to switch out of boot mode if a valid program image is not present. In addition, certain conditions can cause an automatic switch to a mode. For instance, the TMU will automatically switch to boot mode on reset if a valid program image is not present.

[0040] The current mode of the TMU may be identified by the console prompt. The console prompt enumerates the current mode as follows.

- "TMU>" for operational mode
- "Boot>" for boot mode
- "Test>" for test mode

Boot Mode

[0041] Boot mode allows the TMU software to be update in the field. In boot mode, a software image can be downloaded through the console port. The downloaded image will replace the image stored in flash memory. Only the test mode and operational mode portions of the image can be replaced using this method. The boot mode portion of the image can only be replaced during production or through a JTAG port.

[0042] Boot mode may be entered by console command or it may be automatically invoked following a reset if a valid program image is not found. Certain failure conditions, such as a watchdog timeout, can produce a reset that may then result in the boot mode being invoked. Boot mode is exited by a reset when a valid program image is present. Reset can be implemented by pushing the reset button, cycling power or by console command. Boot mode cannot be exited if a valid program image is not present. When boot mode is exited successfully, the TMU returns to the operational mode.

Test Mode

[0043] Test mode supports console commands that directly exercise the TMU hardware. Commands are generally either low-level commands or high-level commands. Low-level commands directly manipulate TMU hardware and provide little or no translation for the operator. Low-level commands are useful for board-level test and troubleshooting. High-level commands provide signal interpretation and manipulate combinations of signals to support interaction with the hardware by the operator. These commands are useful when diagnosing operational issues.

[0044] Test mode is intended for use during manufacturing testing, installation, diagnosing of field failures and repair. Test mode is intended for use by a trained technician. Test mode may be entered from operational mode by console command. Test mode is exited by any reset and the TMU returns to the operational mode (as long as a valid program image is present).

Operational Mode

[0045] Operational mode is the primary mode for the TMU. When in operational mode, the TMU functions autonomously toward its primary goal, supplying precise time synchronization information to the BTS. While in operational

mode, the TMU may send alarms and status information to the console port. In addition, operational mode supports console commands that allow query of operational conditions and manipulation of operational parameters.

[0046] Operational mode is entered automatically following any reset, if a valid program image is present. Operational mode may be exited by invoking test mode or boot mode via console command. Operational mode may be exited automatically if certain failure conditions are detected.

Operational States

[0047] The TMU's front panel status LED reflects the TMU's current state. The state of the TMU is determined by its mode of operation and the exiting conditions. Of the ten (10) possible LED states, only the following are defined as valid. LED states always indicate existing conditions.

- **SOLID RED** (failure) – This indicates a failure, such that the TMU is unable to function normally and must be replaced or repaired by a qualified technician.
- **FLASHING GREEN** (initializing) – This indicates that the TMU is operational and no unexpected conditions have been detected. This state may only exist immediately following reset and indicates that the conditions necessary to provide timing to the BTS have not yet been established. If the required conditions cannot be established within <u>two minutes</u> following reset, the state will proceed to **FLASHING AMBER**. Once this state has been exited, the TMU will not return to this state until it is again reset
- **SOLID GREEN** (full functionality) – This indicates that the TMU is operating normally, there are no outstanding alarm conditions, and the BTS is being supplied with accurate timing.
- **FLASHING AMBER** (impaired) – This indicates the TMU is completely functional but that there exist conditions or alarms that prevent the TMU from supplying the BTS with timing. This state is always the result of external influences, such that replacing the TMU itself will not circumvent the issue. When all outstanding conditions clear, the TMU will return to the **SOLID GREEN** state.

Alarms and Status Messages

[0048] In operational mode, the TMU monitors conditions that may affect its ability to provide accurate timing information to the BTS. In addition, it also notes exceptions or conditions that it encounters in the execution of its programming. Messages concerning these conditions will be sent to the console. These messages are either alarms or status. A *status* message is purely informative and can indicate anything of interest. The issuance of a status message has no effect on the TMU. *Alarms* indicate conditions that may impact the performance of the TMU. The existence of alarms may result in a change of the TMU state. When multiple alarms are indicated, the most severe state is assumed.

Table 1 - TMU Alarms

No.	Alarm	State	Description
1	CPU clock failure	Solid Red	The CPU external oscillator is not functioning **Raised:** During software initialization **Cleared:** Only be reset **Indication to BTS:** No messages
2	TMU Initialization failure	Solid Red	The TMU CPU has encountered an error during initialization **Raised:** During software initialization **Cleared:** Only be reset **Indication to BTS:** No messages **OR** GPSS Status = (3) PPS not Synchronized GPSS Faulty = (1) GPS Receiver Faulty
3	GPS not detected	Solid Red	The CPU is unable to detect the presence of GPS. The GPS is assumed to be totally nonfunctional **Raised:** During software initialization if GPS fails to respond to initialization procedures **Cleared:** Only by reset **Indication to BTS:** GPSS Status = (3) PPS not Synchronized GPSS Faulty = (1) GPS Receiver Faulty
4	GPS comm. failure	Solid Red	The CPU is experiencing difficulty in communicating

No.	Alarm	State	Description
			with the GPS to the extent that the CPU is unable to control the GPS or to obtain the information necessary for the mandatory BTS reports **Raised:** The first time that a mandatory BTS report cannot be completed due to GPS communications **Cleared:** The first time that a mandatory BTS report is successfully accomplished **Indication to BTS:** GPSS Status = (3) PPS not Synchronized GPSS Faulty = (1) GPS Receiver Faulty
5	GPS Internal Failure	Solid Red	The GPS self-test has reported a failure of the GPS ROM and/or RAM. GPS self-test is run following CPU reset. **Raised:** Based on the self test results **Cleared:** Only by reset **Indication to BTS:** GPSS Status = (3) PPS not Synchronized GPSS Faulty = (1) GPS Receiver Faulty
6	GPS No satellites	Flash Amber (Flash Green[1])	There are no satellites available to the GPS receiver. **Raised:** When the *No. of satellites used for positioning* of the GPGGA sentence indicates 0 **Cleared:** When one or more satellites are indicated **Indication to BTS:** GPSS Status = (3) PPS not Synchronized GPSS Faulty = (0) GPS Receiver running
7	GPS PPS Not available	Flash Amber (Flash Green[1])	The GPS indicates that the PPS will not be output. **Raised:** When the *PPS Availability Status* field of the GPTps sentence indicates "PPS not output" **Cleared:** When PPS output is indicated **Indication to BTS:** GPSS Status = (3) PPS not Synchronized GPSS Faulty = (0) GPS Receiver running
8	GPS No UTC Parameter	Flash Amber (Flash Green[1])	The UTC parameter has not been obtained and PPS accuracy cannot be ensured. **Raised:** When the *Date/Time of UTC Parameter* field of

No.	Alarm	State	Description
			the GPTps sentence indicates "000000000000" **Cleared:** When a valid date/time stamp is indicated **Indication to BTS:** GPSS Status = (3) PPS not Synchronized GPSS Faulty = (0) GPS Receiver running
9	GPS Time Not valid	Flash Amber (Flash Green[1])	The GPS time has not been determined. **Raised:** When the *Validity Flag* field of the GPgpt sentence indicates "GPS Time not determined yet" **Cleared:** When "GPS Time valid" is indicated. **Indication to BTS:** GPSS Status = (3) PPS not Synchronized GPSS Faulty = (0) GPS Receiver running
10	GPS Position Mode, Not valid	Flash Amber (Flash Green[1])	The GPS indicates that the position data is not valid. **Raised:** When the *Position System Mode Indication* field of the GPGLL, GPRMC or GPVTG sentence indicates "Data not valid" or The *GPS Quality Indication* field of the GPGGA sentence indicates "0: Fix not available or invalid" **Cleared:** When "Autonomous mode" or "Differential mode" is indicated **Indication to BTS:** GPSS Status = (3) PPS not Synchronized GPSS Faulty = (0) GPS Receiver running
11	PPS not detected	Flash Amber (Flash Green[1])	Information from the GPS indicates that the PPS is being generated, but the PPS is not detected by the CPU. **Raised:** When PPS output is expected and PPS is not found for 2 seconds **Cleared:** When a PPS is detected **Indication to BTS:** GPSS Status = (3) PPS not Synchronized GPSS Faulty = (0) GPS Receiver running
12	GPS Navigation receiver warning	Flash Amber (Flash Green[1])	The GPS indicates a *Navigation receiver warning* in the *Status* field of the GPGLL, GPRMC, or GPRMC sentences.

No.	Alarm	State	Description
			Raised: When "Nav receiver warning" is indicated **Cleared:** When "Data Valid" is indicated **Indication to BTS:** GPSS Status = (3) PPS not Synchronized GPSS Faulty = (0) GPS Receiver running
13	GPS Sats less than 4	Solid Green	The *No of satellites used for positioning* field of the GPGGA or GPGSA sentence indicates that less than 4 satellites are available. **Raised:** When 1,2 or 3 satellites are indicated **Cleared:** When 4 or more satellites are indicated **Indication to BTS:** GPSS Status = (0) PPS Locked GPSS Faulty = (0) GPS Receiver running
14	GPS PPS TRAIM Alarm	Solid Green	TRAIM is available and indicates a problem with the PPS timing. **Raised:** When the *PPS Output Result Status* field of the GPrrm sentence is "1" **Cleared:** When the a value other than "1" is indicated **Indication to BTS:** GPSS Status = (0) PPS Locked GPSS Faulty = (0) GPS Receiver running
15	GPS Antenna Failure	Solid Green	The GPS self-test has reported a failure on the GPS antenna connection. GPS self-test is run following CPU reset. **Raised:** Based on the self-test results **Cleared:** Only by reset **Indication to BTS:** GPSS Status = (0) PPS Locked GPSS Faulty = (0) GPS Receiver running
16	GPS Position Mode, Autonomous	Solid Green	The GPS is operating in stand-alone mode. **Raised:** When the *Position System Mode Indication* field of the GPGLL, GPRMC or GPVTG sentence indicates "Autonomous mode" **Cleared:** When "Autonomous mode" is not indicated **Indication to BTS:**

No.	Alarm	State	Description
			GPSS Status = (0) PPS Locked GPSS Faulty = (0) GPS Receiver running
17	GPS Position Mode, Differential	Solid Green	The GPS is operating in differential mode. **Raised:** When the *Position System Mode Indication* field of the GPGLL, GPRMC or GPVTG sentence indicates "Differential mode" **Cleared:** When "Differential mode" is not indicated **Indication to BTS:** GPSS Status = (0) PPS Locked GPSS Faulty = (0) GPS Receiver running
18	GPS DGPS not received	Solid Green	The GPS is not receiving DGPS data. **Raised:** When the *DGPS status* field of the GPdie sentence is "0" **Cleared:** When the *DGPS status* field of the GPdie sentence is non-zero **Indication to BTS:** GPSS Status = (0) PPS Locked GPSS Faulty = (0) GPS Receiver running
19	GPS DGPS base station unhealthy	Solid Green	The GPS is receiving DGPS information but the DGPS base station is unhealthy, the GPS will operate stand-alone **Raised:** When the *DGPS Base station's Health Condition* field of the GPdie sentence indicates "unhealthy" **Cleared:** When "healthy" is indicated **Indication to BTS:** GPSS Status = (0) PPS Locked GPSS Faulty = (0) GPS Receiver running
20	GPS DGPS Data Abnormal	Solid Green	The GPS is receiving DGPS information but the DGPS data is bad, the GPS will operate stand-alone **Raised:** When the *DGPS Data Status* field of the GPDie sentence indicates "Abnormal" **Cleared:** When "Normal" is indicated **Indication to BTS:** GPSS Status = (0) PPS Locked

No.	Alarm	State	Description
			GPSS Faulty = (0) GPS Receiver running
21	GPS DGPS Error	Solid Green	The GPS indicates that an error associated with the DGPS. **Raised:** When the *DGPS Error Code* field of the GPdie sentence is other than "0" **Cleared:** When "0" is indicated **Indication to BTS:** GPSS Status = (0) PPS Locked GPSS Faulty = (0) GPS Receiver running
22	GPS TRAIM Detection Only	Solid Green	TRAIM is available but there are only enough satellites to detect alarm conditions, deletion of abnormal satellites is not possible **Raised:** When the *TRAIM Status* field of the GPrrm sentence is "1" **Cleared:** When the value is other than "1" **Indication to BTS:** GPSS Status = (0) PPS Locked GPSS Faulty = (0) GPS Receiver running
23	GPS TRAIM Not Available	Solid Green	TRAIM is not available **Raised:** When *TRAIM Status* field of the GPrrm sentence is "2" **Cleared:** When the value is other than "2" **Indication to BTS:** GPSS Status = (0) PPS Locked GPSS Faulty = (0) GPS Receiver running

Operational Processes

[0049] This section describes the procedures followed by the illustrative TMU software. With the exception of the some of the initial startup processing, all procedures refer to operational mode.

Startup

[0050] The startup procedure is performed following any reset of the C51. The purpose of the startup process is to bring up the platform and establish an operational state. The startup procedure also performs a self-check of the TMU

platform and a software integrity test. If the software integrity test fails, the TMU enters boot mode.

Establish C51 Control

[0051] The first part of the startup procedures establishes the operation of the C51 and configures I/O for control of the TMU platform.

1. Check for the presence of a software image.
2. Check the integrity of the software image.
3. Configure the C51 I/O mapping
4. Disable PPS and Serial output to the BTS.
5. Configure the LED drive.
6. Check and switch to the external oscillator.
7. Configure the serial communications ports

Establish Control of the GPS

[0052] The second part of the startup procedure establishes control of the GPS. When establishing control of the GPS, the TMU may perform either a *warm* or a *cold* restart. A *cold restart* assumes that the GPS engine must be completely reinitialized and that all previous information is lost. Under these conditions, several minutes may be required before timing can be reestablished. A *warm restart* attempts to reestablish timing sooner by preserving the information stored in GPS. This is possible because the GPS is an independent subsystem of the TMU. Under some conditions, such as a button reset, the C51 is reset but the GPS is not. In addition, since no power interruption was experienced, the GPS is still operating normally. In these cases, a warm restart reestablishes control of the GPS without disrupting its operation.

[0053] A cold restart of the GPS will be performed if any of the following conditions exist, otherwise, a warm restart will be attempted.

- The C51 experienced a power-on-reset.
- A hard self-reset was commanded.
- The GPS does not respond to communications.
- The GPS self test indicates an error.
- The reset button was pushed while the LED state was other than **SOLID GREEN**.

Cold Restart

[0054] A cold restart of the GPS involves the following steps.

1. Give the GPS a hard reset by asserting its reset signal line.
2. Send the $PFEC,GPclr,1 command.
3. Stop all periodic report messages.
4. Perform a *Self-Test.*
5. Configure timing for periodic messages.
6. Configure PPS delay due to cable length.
7. *PPS Control Mode* is set to be output always.
8. Proceed to establishing position.

Warm Restart

[0055] A warm restart of the GPS involves the following steps:

1. Give the GPS a hard reset by asserting its reset signal line.
2. Send the $PFEC,GPclr,2 command.
3. Stop all periodic report messages.
4. If GPS fails to return response messages, perform Cold Restart.
5. Perform a *Self-Test.*
6. If *Self-Test* indicates that backed up data is bad, perform Cold Restart.
7. Configure timing for periodic messages.
8. Configure PPS delay due to cable length.
9. Configure *PPS Control Mode* to be output always.
10. Proceed to establishing position.

Establishing Position

[0056] Once the TMU has established control of the GPS, its next objective is to establish its position. The GPS must determine its position before it will be able to produce accurate time information. Following a warm restart, the TMU checks the GPS to determine if the position is already known and fixed (fixed observation mode) by the GPS. If the position is both known and fixed, the TMU reads the location from the GPS and proceeds as normal. If the position is known but not fixed, the TMU reads the location and proceeds with *self-survey* as described in the next section. If the position is unknown (or for the case of a cold start), the TMU proceeds with establishing its position.

[0057] The TMU can obtain its position information (latitude, longitude and altitude) from one of three sources, console input, nonvolatile memory or self-survey.

The TMU stores its last known location in its nonvolatile memory. To determine its current position, the TMU sets the GPS to the estimated observation mode and sets the initial position to its last know location. The TMU then proceeds with self-survey.

[0058] A position can be entered manually via console command. If this is done, the location replaces the location data stored in the nonvolatile memory, the GPS is set to the estimated observation mode and the specified location data is written to the GPS as the initial position. The TMU then proceeds with self-survey.

[0059] When position is unknown, there is no last location stored, and there is no console input, the TMU relies completely on the self-survey process. In this case, the GPS is set to the estimated observation mode, and the last known location is used as the initial position. The self-survey process is then allowed to correct the location information. If the last known location is very far from the actual location, it may require an extended amount of time for the TMU to establish its time synchronization.

Self Survey

[0060] The TMU utilizes the self-survey process to determine its exact position and, thereby, produce the most accurate timing. To determine location, the TMU places the GPS into the *estimated observation mode*. In this mode, the GPS will determine its location from the satellites that it can observe. While performing self-survey, the TMU will periodically read the location data from the GPS and compute an average location. Note that self-survey does not prevent the TMU from outputting time synchronization information once an initial location has been established by the GPS. The self-survey process will continue for up to12 hours. At the completion of the self-survey period, the GPS will be set to the *fixed observation mode* and the average location computed will be set. The location determined by self-survey will replace the last known location stored in the TMU nonvolatile memory.

Position Averaging

[0061] While performing self-survey, the TMU obtains the estimated location information once each minute in the **$GPGGA** message. The TMU implements independent averages for longitude, latitude and altitude parameters. The TMU implements a majority-voting algorithm on the *integer portion* of each parameter and an averaging of the *fractional portion*. The integer portion of latitude and longitude includes degrees and integer minutes. The integer portion of altitude is

the whole 100s of meters. The fractional portion is the fractional minutes of latitude or longitude and altitude modulo 100.

[0062] For integer portions, the majority-voting algorithm observes the current reported value; the two previously reported values and the *last known location* (LKL) value. If the integer portion of the three reported values agrees with each other but disagree with the LKL, the LKL is discarded and replaced with the agreed integer portion. For example, if the integer portion of the three most recent latitude values agree but disagree with the LKL, the integer portion of the LKL is replaced with the agreed upon value. The fractional portion of the LKL is replaced with the average of the fractional portion of the consenting values.

[0063] If the integer portion of all four values agrees, the fractional portion of the newest value is averaged into the LKL. If all values, except the newest value agree, the fractional portion of the newest value is not averaged into the LKL. The fractional portion is computed by a straight average of all of the contributions since the last time the LKL was replaced.

[0064] The majority-voting algorithm helps to protect the average from the influence of anomalous locations. Additional rules or algorithms may be employed in determining the stability of the location average and allow a more rapid change to fixed position mode.

Last Known Location

[0065] The TMU stores its last known location in its nonvolatile memory. This location is utilized to hasten the establishment the GPS time output. To minimize the wear on nonvolatile memory, the value will be updated only on one of the following conditions.

- When a manual location is entered via console command.
- On completion of the self-survey processing.
- Whenever, the self-survey average differs from the stored location by more than 1/100 minute of latitude or longitude, or more than 10 meters of altitude.

Antenna Cable Length

[0066] The length of the cable to the GPS antenna can affect the accuracy of the PPS. The TMU requires that this value be entered manually during installation. The POSITION console command is provided for this purpose. The cable length will

be stored to non-volatile memory and will be utilized every time the GPS is configured.

Initiating Output to BTS

[0067] The TMU configures the GPS to begin output of timing data immediately. The TMU configures the GPS to begin outputting the PPS signal immediately. If the GPS is in the fixed observation mode, the PPS will be accurate for as long as one satellite is available. If the GPS is in the estimated observation mode, the PPS will become accurate when 4 satellites are available to fix the position, the UTC parameter is available, ephemeris data for satellite is available, and the UTC computation completes.

[0068] The TMU will begin sending the *Periodic Pulse Report* (GPppr) and the *Position Data Report* (GPGGA) to the BTS immediately after initialization. As soon as the PPS signal is available from the GPS, the TMU will begin sourcing the PPS signal to the BTS as well. However, the *GPSS Status field* of the GPppr will indicate "PPS Not synchronized" until all alarm conditions in the above table marked *Flash Green* are clear.

Supporting Greater Timing Accuracy

[0069] The TMU attempts to support the greatest possible timing accuracy by allowing the GPS to utilize its DGPS and TRAIM features. These features are enabled by default.

Synchronization Loss

[0070] Once timing output has successfully commenced, the occurrence of any critical alarm will cause the *GPSS Status field* of the GPppr to indicate, "PPS Not synchronized" until the condition clears.

BTS Messages Supported

[0071] The TMU supports only the messages that are mandatory. In addition, only the mandatory fields within these messages are supported. These messages are:

1. Periodic PPS Report
2. Position Data Report

Periodic PPS Report ($PTP,GPppr)

[0072] The *GPS TOW Standard Deviation* field of the Periodic PPS Report will be populated as follows.

- If 5 or more satellites used for positioning, the field will be set to 50nsec
- If 4 or less satellites are used for positioning, the field will be set to 100nsec
- If no satellites cause are available, the *GPS Status* field will be set to (3) PPS not synchronized

Position Data (&GPGGA)

[0073] The optional fields; *DGPS Data Time*, *DGPS Station ID* and the *checksum* will not be provided. The fields; *DOP*, *Geoid of Altitude*, and *Unit of Geoid* are set to a blank.

Console Port Operation

[0074] The console port allows human interaction and monitoring of the TMU through an ASCII terminal or terminal emulation software. Following reset or by entering *escape* at the command prompt, the console interface enters *status display mode*. In this mode, alarms and other event driven status strings are sent to the console. The console can collect these strings to monitor the operation and health of the TMU.

[0075] When the *enter key* is pressed while in status display mode, the console interface changes to *command entry mode* and issues the command prompt. The command prompt reflects the current mode of TMU operation; boot, test or operational. Commands may then be entered and the results will be sent to the console. All spontaneous alarm and status string output will be inhibited while in command entry mode.

[0076] The commands available are limited by the TMU's mode of operation. An operator may change modes to obtain access to the desired commands. The operator should be aware of the consequences of invoking any TMU mode of operation.

4. External Interface Unit (EIU) (illustrative embodiment)

[0077] As discussed, to enable synchronized GSM operation, a 1 PPS signal may be provided to the BTSs. For sites that already have an LMU deployed with them, the 1 PPS signal may already be available on those existing LMUs (since the LMUs include built-in GPS receivers). However, for certain types of BTS equipment, the following may be true:

- The 1 PPS signal needs to be converted to RS-422 signal levels for this application.
- In addition to the 1 PPS conversion, the timing information related to 1 PPS signal also needs to be sent over the RS-422 interface using the proprietary protocol called for by the BTS equipment manufacturer (e.g., Ericsson).

[0078] The protocol conversion hardware unit that performs these two operations is called an EIU and is applicable to those cell sites that already have an LMU deployed there.

Impact on GBE and mE-board connectivity

- The EIU will be connected to the 9-pin RS-232 serial port on the LMU. This is the same port that is also used to connect the GBE (ground based electronics) in AOA deployments. Hence, in their present forms the GBE and EIU cannot be co-deployed. Therefore, installation of EIU precludes AOA deployment. The solution to this problem is to use a TMU instead of an EIU in cases where AOA is needed.
- Similar to the above problem is the case of using the environmental board (which is sometimes called the mini environmental board, or mE-board). It also uses the same port and cannot be deployed where an EIU is used.

Architecture

[0079] An exemplary architecture for an EIU is depicted in Figure 6, which shows the internal architecture and external interfaces of the EIU. It connects to the 9 pin serial port and the 1 PPS on the LMU side, and converts both of these interfaces to RS-422 signal levels for connection with the BTS. The 1 PPS and serial data signals are fanned out to 4 four ports that comprise a quad output connector. Each output port provides both a 1 PPS and a serial data output in RS-422 signal levels.

LMU-N Interface

[0080] The illustrative EIU receives timing messages from its LMU interface in RS-232 signal format/levels. The RS-232 signal connection pin outs will

be as shown in table 1. The EIU receives the 1 PPS signal from the LMU through its 1 PPS port. The 1 PPS EIU port appears as a 50-ohm load from outside.

Pin	Signal Name	Description
1,7,8,9	NC	
2	RX	Port 1 Receive, from the PC to the processor
3	TX	Port 1 Transmit, from the processor to PC
4	DTR	Data Terminal Ready – from PC
5	GND	Ground
6	DSR	Data Set Ready

Table: RS-232 Connector Pin Outs

BTS Interface

[0081] The EIU transmits the LMU synchronization data messages and the 1PPS signal to the BTS in RS-422 signal levels as shown in Figure 4. The synchronization data interface to the BTS is a serial communications link.

[0082] The 1 PPS signal will have a frequency of 1 Hz and an accuracy of 100ns RMS at the 1 PPS EIU output port with respect to UTC time.

[0083] The signal connection pin outs for each port will be as shown in the table below.

Pin	Signal Name	Description
1	TX+	Transmit
2	TX-	Transmit return
3	TX+	Transmit (optional)
4	1PPS	Pulse Per Second
5	1PPS-	Pulse Per Second Return
6	TX-	Transmit return (optional)
7,8	NC	
9,10	GND	

Table: RS-422 Single Port Pin Outs

Serial Communications Link

[0084] The serial communications link physical layer is based on a RS-422 UART. Specific characteristics are as follows:

- RS-422 interface with 100 ohm termination in the BTS
- 9600 bits/s
- No parity
- One start bit
- 8 bits data length
- One stop bit

One PPS

[0085] A RS-422 transmitter in the EIU drives the one PPS signal. The 10 – 90 % rise time will be less than 10 ns at the EIU output. The BTS has a built in 100 ohm termination.

5. Conclusion

[0086] The true scope the present invention is not limited to the illustrative and presently preferred embodiments disclosed herein. For example, the foregoing disclosure of a Wireless Location System uses explanatory terms, such as LMU, TMU, EIU, BTS, BSC, SMLC, and the like, which should not be construed so as to limit the scope of protection of the following claims, or to otherwise imply that the inventive aspects of the Wireless Location System are limited to the particular methods and apparatus disclosed. Moreover, as will be understood by those skilled in the art, many of the inventive aspects disclosed herein may be applied in location systems that are not based on TDOA techniques. In such non-TDOA systems, the SMLC described above would not be required to perform TDOA calculations. Similarly, the invention is not limited to systems employing LMUs constructed in a particular manner, or to systems employing specific types of receivers, computers, signal processors, etc. The LMUs, SMLC, etc., are essentially programmable data collection and processing devices that could take a variety of forms without departing from the inventive concepts disclosed herein. Given the rapidly declining cost of

digital signal processing and other processing functions, it is easily possible, for example, to transfer the processing for a particular function from one of the functional elements (such as the SMLC) described herein to another functional element (such as the LMU) without changing the inventive operation of the system. In many cases, the place of implementation (i.e., the functional element) described herein is merely a designer's preference and not a hard requirement. Accordingly, except as they may be expressly so limited, the scope of protection of the following claims is not intended to be limited to the specific embodiments described above.

[0087] In addition, any reference herein to control channels or voice channels shall refer to all types of control or voice channels, whatever the preferred terminology for a particular air interface. Moreover, there are many more types of air interfaces (e.g., IS-95 CDMA, CDMA 2000, and UMTS WCDMA) used throughout the world, and, unless the contrary is indicated, there is no intent to exclude any air interface from the inventive concepts described within this specification. Indeed, those skilled in the art will recognize other interfaces used elsewhere are derivatives of or similar in class to those described above.

CLAIMS

We claim:

1. In a network overlay wireless location solution for a wireless communications system comprising a network of Base Transceiver Stations (BTSs), a method of improving spectrum, comprising synchronizing a plurality of BTSs with a timing signal, wherein at least one BTS is provided with said timing signal by a Timing Measurement Unit (TMU).

2. A method as recited in claim 1, wherein said wireless communications system comprises a GSM communications network.

3. A method as recited in claim 1, wherein said wireless communications system comprises a UMTS communications network.

4. A method as recited in any of claims 1 - 3, wherein the timing signal is provided to each BTS by either a Location Measurement Unit (LMU) or a Timing Measurement Unit (TMU).

5. A method as recited in claim 4, wherein each LMU and TMU comprises a GPS-based timing reference module and means for generating a periodic timing signal which is synchronized within a pre-specified degree of accuracy with the timing signals generated by each other LMU and TMU.

6. A method as recited in claim 5, wherein the LMUs are used to measure the timing of uplink and/or downlink signals in the cellular network in support of location techniques.

7. A method as recited in claim 6, wherein the LMUs and TMUs distribute timing signals, including a periodic electrical pulse as well as time description information.

8. A method as recited in claim 7, wherein the format of the electrical pulse and time description information are modified through hardware and software to adapt to formats required by various BTS types.

9. A method as recited in claim 8, wherein the BTSs with co-located LMUs receive a synchronization signal with little or no hardware cost, and wherein BTS sites not equipped with an LMU are equipped with a TMU that has the single function of providing BTS time signals in the same formats as provided by the LMUs, wherein the time signals provided by the TMUs are synchronous to the signals provided by the LMUs and the timing-only TMU has a lower cost than the LMU because it does not support uplink or downlink signal measurement functions.

10. A network overlay wireless location system for use in association with a wireless communications system comprising a network of Base Transceiver Stations (BTSs), comprising a plurality of Location Measurement Units (LMUs) and at least one Timing Measurement Unit (TMU), and a mechanism for synchronizing a plurality of BTSs with a timing signal, wherein at least one BTS is provided with said timing signal by said at least one TMU.

11. A wireless location system as recited in claim 10, wherein said wireless communications system comprises a GSM communications network.

12. A wireless location system as recited in claim 10, wherein said wireless communications system comprises a UMTS communications network.

13. A wireless location system as recited in any of claims 10 - 12, wherein the timing signal is provided to each BTS by either a Location Measurement Unit (LMU) or a Timing Measurement Unit (TMU).

14. A wireless location system as recited in claim 13, wherein each LMU and TMU comprises a GPS-based timing reference module and means for generating a periodic timing signal which is synchronized within a pre-specified degree of accuracy with the timing signals generated by each other LMU and TMU.

15. A wireless location system as recited in claim 14, wherein the LMUs are used to measure the timing of uplink and/or downlink signals in the cellular network in support of location techniques.

16. A wireless location system as recited in claim 15, wherein the LMUs and TMUs distribute timing signals, including a periodic electrical pulse as well as time description information.

17. A wireless location system as recited in claim 16, wherein the format of the electrical pulse and time description information are modified through hardware and software to adapt to formats required by various BTS types.

18. A wireless location system as recited in claim 17, wherein the BTSs with co-located LMUs receive a synchronization signal with little or no hardware cost, and wherein BTS sites not equipped with an LMU are equipped with a TMU that has the single function of providing BTS time signals in the same formats as provided by the LMUs, wherein the time signals provided by the TMUs are synchronous to the signals provided by the LMUs and the timing-only TMU has a lower cost than the LMU because it does not support uplink or downlink signal measurement functions.

19. A wireless location system for use in association with a wireless communications system comprising a network of Base Transceiver Stations (BTSs), comprising a plurality of Location Measurement Units (LMUs) and at least one Timing Measurement Unit (TMU), wherein said LMUs and at least one TMU are operative for synchronizing a plurality of BTSs with a timing signal, wherein at least one of said BTSs is provided with said timing signal by said at least one TMU; and wherein each LMU and TMU comprises a GPS-based timing reference module and means for generating time description information and a periodic timing signal that is synchronized with the timing signals generated by each other LMU and TMU.

20. A wireless location system as recited in claim 19, wherein BTSs with co-located LMUs receive a synchronization signal with little or no hardware cost, and wherein BTS sites not equipped with an LMU are equipped with a TMU that has the single function of providing BTS time signals in the same formats as provided by the LMUs, wherein the time signals provided by the TMUs are synchronous to the signals provided by the LMUs and the TMU has a lower cost than the LMU because it does not support uplink or downlink signal measurement functions.

21. A wireless location system as recited in claim 20, wherein said wireless communications system comprises a GSM communications network.

22. A wireless location system as recited in claim 20, wherein said wireless communications system comprises a UMTS communications network.

23. A wireless location system as recited in claim 20, wherein the format of the timing signal and time description information are modified through hardware and software to adapt to formats required by various BTS types.

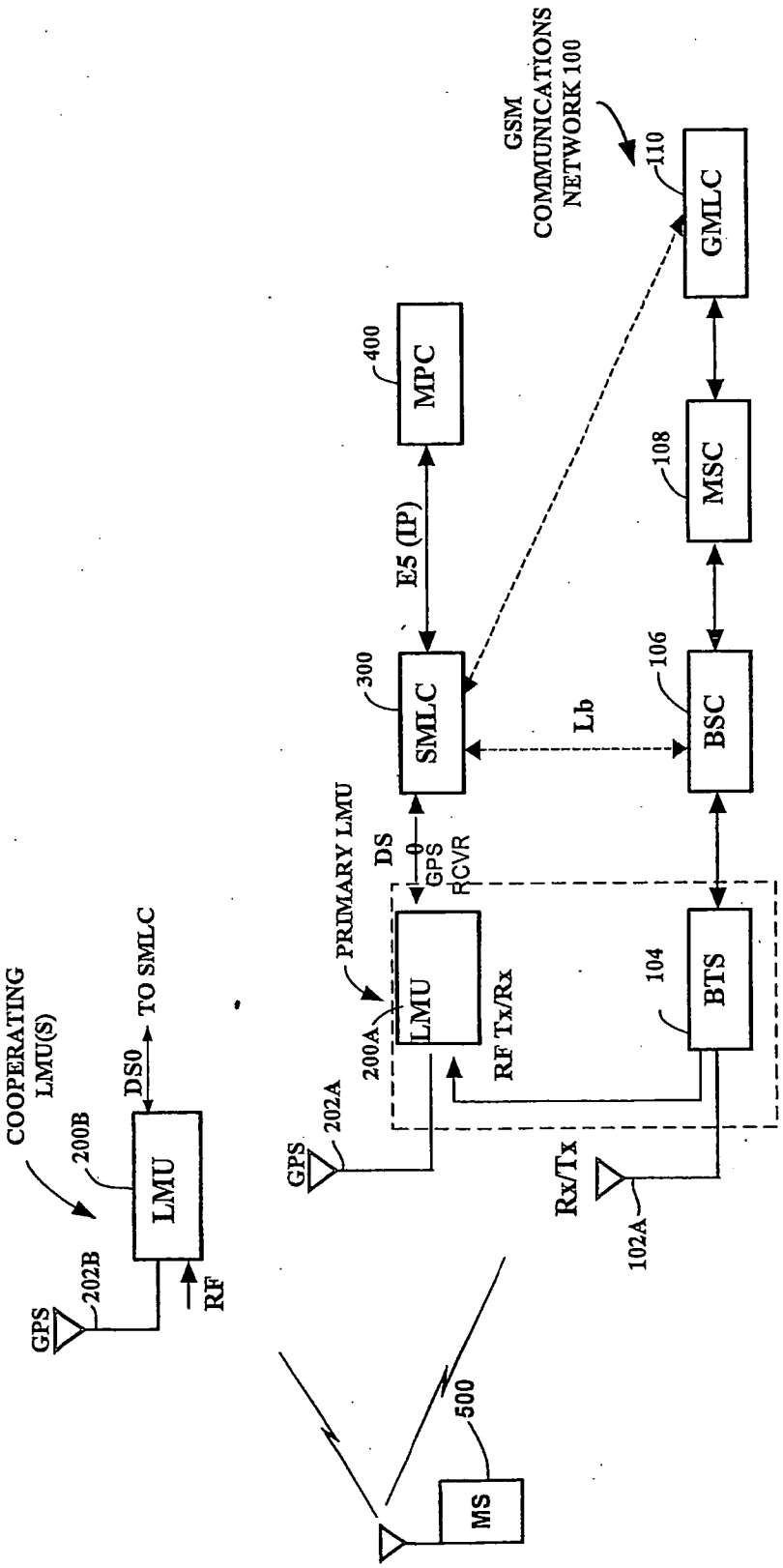
GSM
COMMUNICATIONS
NETWORK 100
110
GMLC
400
MPC
108
MSC
E5 (IP)
300
SMLC
Lb
106
BSC
PRIMARY LMU
DS
GPS
RCVR
LMU
200A
RF Tx/Rx
104
BTS
COOPERATING
LMU(S)
200B
LMU
DS0
TO SMLC
GPS
202B
RF
GPS
202A
Rx/Tx
102A
500
MS

FIGURE 1

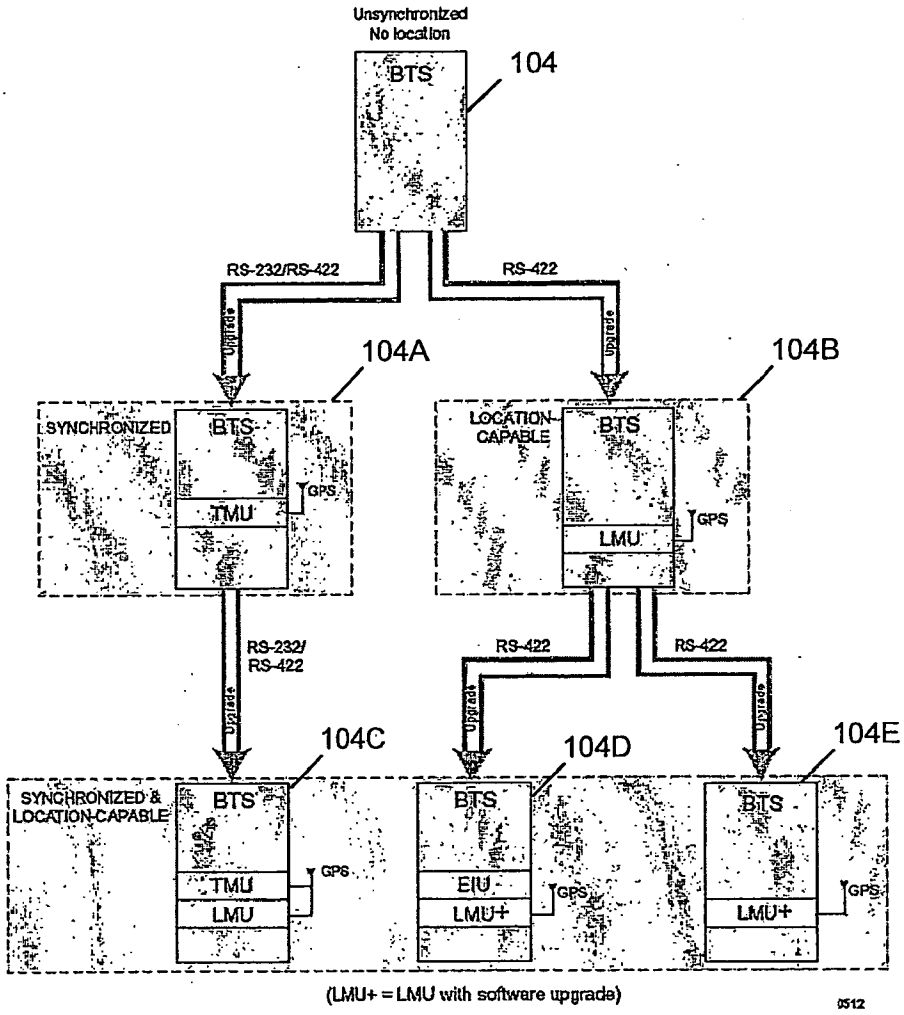
Unsynchronized
No location
BTS
104
RS-232/RS-422
RS-422
Upgrade
Upgrade
104A
104B
SYNCHRONIZED
BTS
TMU
GPS
LOCATION-CAPABLE
BTS
LMU
GPS
RS-232/
RS-422
Upgrade
RS-422
RS-422
Upgrade
Upgrade
104C
104D
104E
SYNCHRONIZED &
LOCATION-CAPABLE
BTS
TMU
LMU
GPS
BTS
EIU
LMU+
GPS
BTS
LMU+
GPS
(LMU+ = LMU with software upgrade)
0512

FIGURE 2

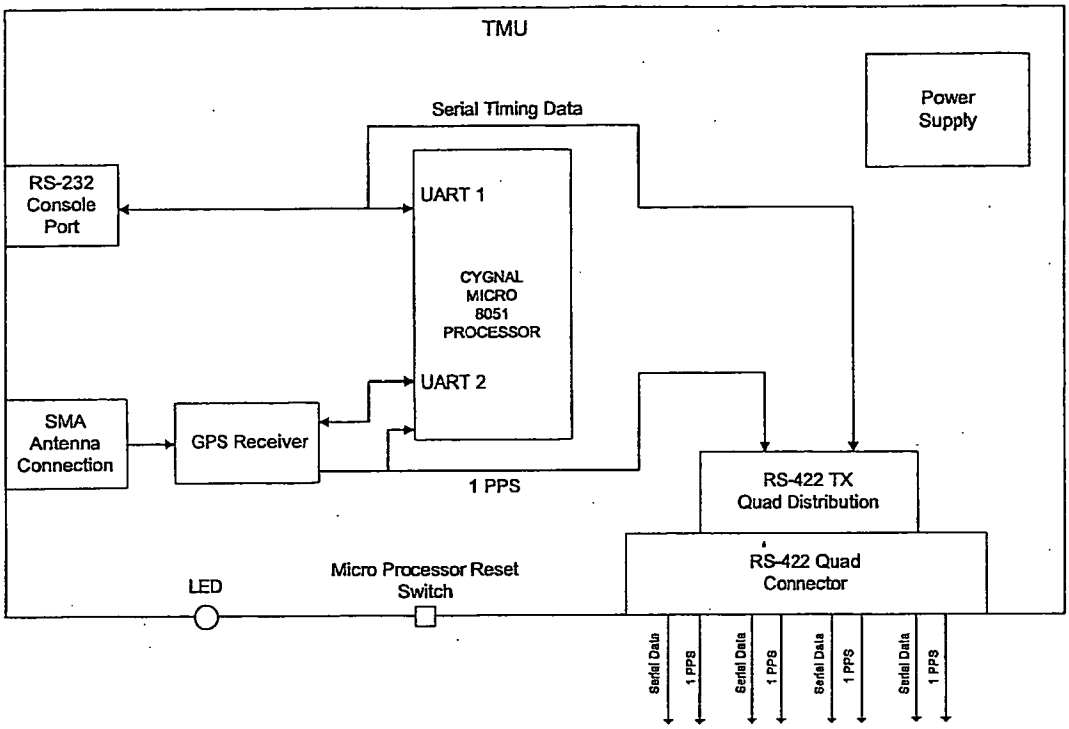

FIGURE 3

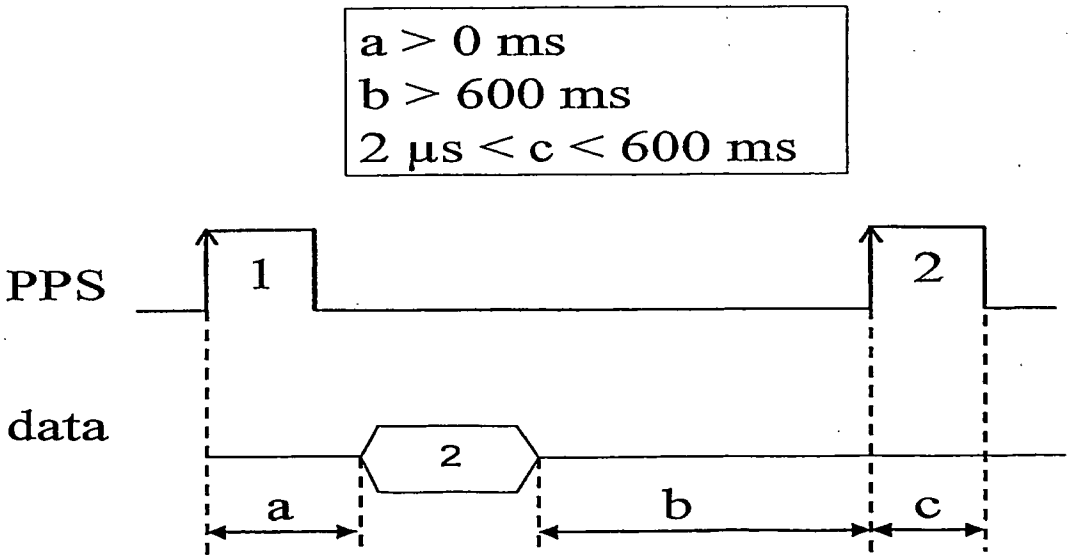

FIGURE 4

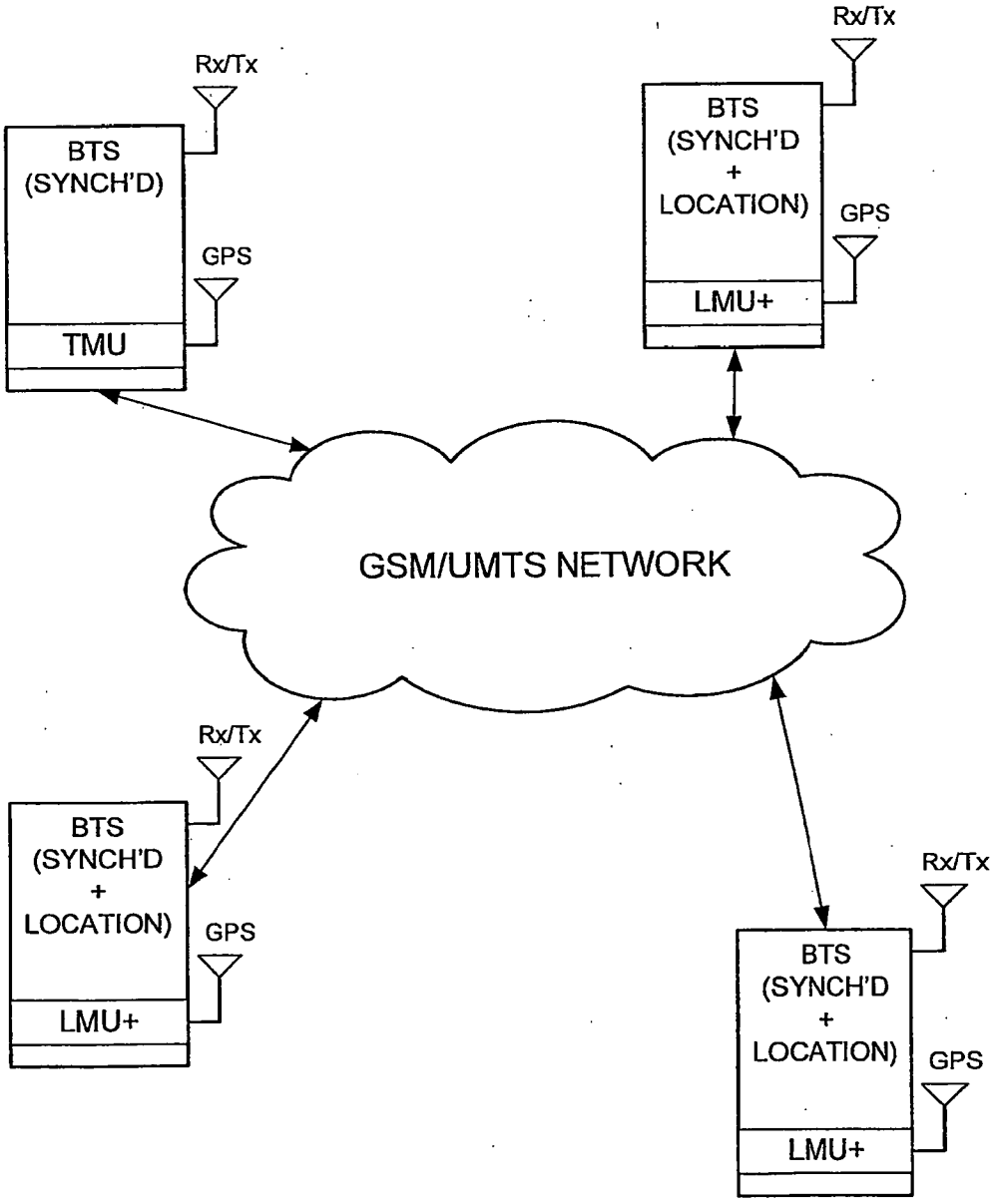
Rx/Tx
BTS
(SYNCH'D)
GPS
TMU
Rx/Tx
BTS
(SYNCH'D
+
LOCATION)
GPS
LMU+
GSM/UMTS NETWORK
Rx/Tx
BTS
(SYNCH'D
+
LOCATION)
GPS
LMU+
Rx/Tx
BTS
(SYNCH'D
+
LOCATION)
GPS
LMU+

FIGURE 5

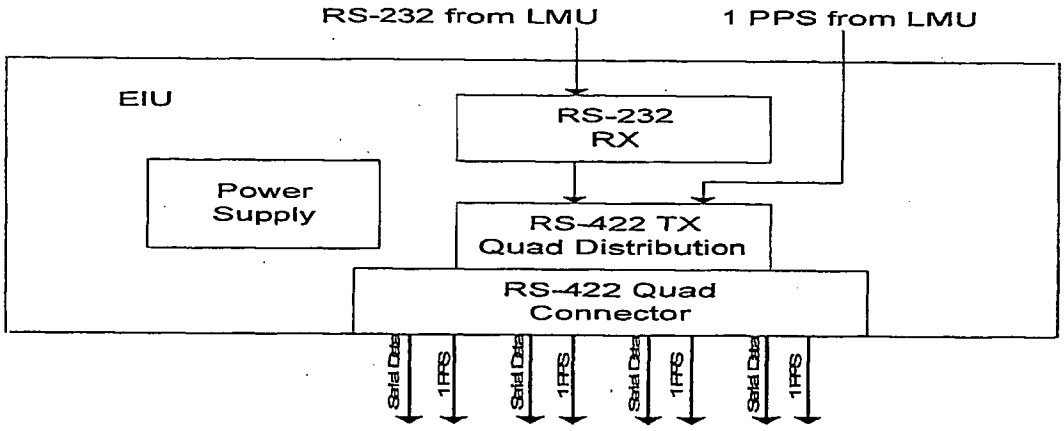
RS-232 from LMU
1 PPS from LMU
EIU
RS-232
RX
Power
Supply
RS-422 TX
Quad Distribution
RS-422 Quad
Connector
Serial Data
1PPS
Serial Data
1PPS
Serial Data
1PPS
Serial Data
1PPS

FIGURE 6

INTERNATIONAL SEARCH REPORT

International application No.
PCT/US05/14188

A. CLASSIFICATION OF SUBJECT MATTER

IPC(7) : H04Q 7/20
US CL : 455/456.1, 456.2,456.3,459

According to International Patent Classification (IPC) or to both national classification and IPC

B. FIELDS SEARCHED

Minimum documentation searched (classification system followed by classification symbols)
U.S. : 455/456.1, 456.2,456.3,459

Documentation searched other than minimum documentation to the extent that such documents are included in the fields searched
None

Electronic data base consulted during the international search (name of data base and, where practicable, search terms used)
None

C. DOCUMENTS CONSIDERED TO BE RELEVANT

Category *	Citation of document, with indication, where appropriate, of the relevant passages	Relevant to claim No.
A	US 2004/0203865 A1 (Krasner) 14 Oct. 2004 (14.10.2004), fig. 11, pars. 0099-0117	1-23
A	US 2004/0092275 (Krasner et al) 13 May 2004 (13.13.2004), fig. 5A, pars. 0033-0038	1-23

☐ Further documents are listed in the continuation of Box C. ☐ See patent family annex.

* Special categories of cited documents:

"A" document defining the general state of the art which is not considered to be of particular relevance

"B" earlier application or patent published on or after the international filing date

"L" document which may throw doubts on priority claim(s) or which is cited to establish the publication date of another citation or other special reason (as specified)

"O" document referring to an oral disclosure, use, exhibition or other means

"P" document published prior to the international filing date but later than the priority date claimed

"T" later document published after the international filing date or priority date and not in conflict with the application but cited to understand the principle or theory underlying the invention

"X" document of particular relevance; the claimed invention cannot be considered novel or cannot be considered to involve an inventive step when the document is taken alone

"Y" document of particular relevance; the claimed invention cannot be considered to involve an inventive step when the document is combined with one or more other such documents, such combination being obvious to a person skilled in the art

"&" document member of the same patent family

Date of the actual completion of the international search	Date of mailing of the international search report
22 August 2005 (22.08.2005)	23 SEP 2005
Name and mailing address of the ISA/US Mail Stop PCT, Attn: ISA/US Commissioner of Patents P.O. Box 1450 Alexandria, Virginia 22313-1450 Facsimile No. (703) 305-3230	Authorized officer JOSEPH H FEILD Telephone No. 571-272-4090

Form PCT/ISA/210 (second sheet) (July 1998)

PATENT COOPERATION TREATY

From the INTERNATIONAL SEARCHING AUTHORITY

RECEIVED
DUANE MORRIS, LLP
JUL 07 2008

PCT

To:
MARK C. COMTOIS
DUANE MORRIS LLP
505 9TH STREET, NW
SUITE 1000
WASHINGTON, DC 20004

NOTIFICATION OF TRANSMITTAL OF THE INTERNATIONAL SEARCH REPORT AND THE WRITTEN OPINION OF THE INTERNATIONAL SEARCHING AUTHORITY, OR THE DECLARATION

(PCT Rule 44.1)

	Date of mailing *(day/month/year)* 01 JUL 2008
Applicant's or agent's file reference AND01 076 PCT	**FOR FURTHER ACTION** See paragraphs 1 and 4 below
International application No. PCT/US 08/01446	International filing date *(day/month/year)* 04 February 2008 (04.02.2008)
Applicant ANDREW CORPORATION	

DOCKETED

1. ☒ The applicant is hereby notified that the international search report and the written opinion of the International Searching Authority have been established and are transmitted herewith.

   Filing of amendments and statement under Article 19:
   The applicant is entitled, if he so wishes, to amend the claims of the international application (see Rule 46):

   When? The time limit for filing such amendments is normally two months from the date of transmittal of the international search report.

   Where? Directly to the International Bureau of WIPO, 34 chemin des Colombettes 1211 Geneva 20, Switzerland, Facsimile No.: +41 22 740 14 35

   For more detailed instructions, see the notes on the accompanying sheet.

2. ☐ The applicant is hereby notified that no international search report will be established and that the declaration under Article 17(2)(a) to that effect and the written opinion of the International Searching Authority are transmitted herewith.

3. ☐ **With regard to the protest** against payment of (an) additional fee(s) under Rule 40.2, the applicant is notified that:

   ☐ the protest together with the decision thereon has been transmitted to the International Bureau together with the applicant's request to forward the texts of both the protest and the decision thereon to the designated Offices.

   ☐ no decision has been made yet on the protest; the applicant will be notified as soon as a decision is made.

4. **Reminders**

   Shortly after the expiration of **18 months** from the priority date, the international application will be published by the International Bureau. If the applicant wishes to avoid or postpone publication, a notice of withdrawal of the international application, or of the priority claim, must reach the International Bureau as provided in Rules 90*bis*.1 and 90*bis*.3, respectively, before the completion of the technical preparations for international publication.

   The applicant may submit comments on an informal basis on the written opinion of the International Searching Authority to the International Bureau. The International Bureau will send a copy of such comments to all designated Offices unless an international preliminary examination report has been or is to be established. These comments would also be made available to the public but not before the expiration of 30 months from the priority date.

   Within **19 months** from the priority date, but only in respect of some designated Offices, a demand for international preliminary examination must be filed if the applicant wishes to postpone the entry into the national phase **until 30 months** from the priority date (in some Offices even later); otherwise, the applicant must, **within 20 months** from the priority date, perform the prescribed acts for entry into the national phase before those designated Offices.

   In respect of other designated Offices, the time limit of **30 months** (or later) will apply even if no demand is filed within 19 months.

   See the Annex to Form PCT/IB/301 and, for details about the applicable time limits, Office by Office, see the *PCT Applicant's Guide*, Volume II, National Chapters and the WIPO Internet site.

Name and mailing address of the ISA/US Mail Stop PCT, Attn: ISA/US Commissioner for Patents P.O. Box 1450, Alexandria, Virginia 22313-1450 Facsimile No. 571-273-3201	Authorized officer: Lee W. Young PCT Helpdesk: 571-272-4300 PCT OSP: 571-272-7774

PATENT COOPERATION TREATY

PCT

INTERNATIONAL SEARCH REPORT

(PCT Article 18 and Rules 43 and 44)

Applicant's or agent's file reference AND01 076 PCT	**FOR FURTHER ACTION**	see Form PCT/ISA/220 as well as, where applicable, item 5 below.
International application No. PCT/US 08/01446	International filing date *(day/month/year)* 04 February 2008 (04.02.2008)	(Earliest) Priority Date *(day/month/year)* 05 February 2007 (05.02.2007)
Applicant ANDREW CORPORATION		

This international search report has been prepared by this International Searching Authority and is transmitted to the applicant according to Article 18. A copy is being transmitted to the International Bureau.

This international search report consists of a total of 2 sheets.

☐ It is also accompanied by a copy of each prior art document cited in this report.

1. **Basis of the report**
   a. With regard to the **language**, the international search was carried out on the basis of:
      ☒ the international application in the language in which it was filed.
      ☐ a translation of the international application into _____ which is the language of a translation furnished for the purposes of international search (Rules 12.3(a) and 23.1(b)).
   b. ☐ This international search report has been established taking into account the **rectification of an obvious mistake** authorized by or notified to this Authority under Rule 91 (Rule 43.6*bis*(a)).
   c. ☐ With regard to any **nucleotide and/or amino acid sequence** disclosed in the international application, see Box No. I.

2. ☐ **Certain claims were found unsearchable** (see Box No. II).

3. ☐ **Unity of invention is lacking** (see Box No. III).

4. With regard to the **title**,
   ☒ the text is approved as submitted by the applicant.
   ☐ the text has been established by this Authority to read as follows:

5. With regard to the **abstract**,
   ☒ the text is approved as submitted by the applicant.
   ☐ the text has been established, according to Rule 38.2(b), by this Authority as it appears in Box No. IV. The applicant may, within one month from the date of mailing of this international search report, submit comments to this Authority.

6. With regard to the **drawings**,
   a. the figure of the **drawings** to be published with the abstract is Figure No. _____
      ☐ as suggested by the applicant.
      ☐ as selected by this Authority, because the applicant failed to suggest a figure.
      ☐ as selected by this Authority, because this figure better characterizes the invention.
   b. ☒ none of the figures is to be published with the abstract.

INTERNATIONAL SEARCH REPORT

International application No.
PCT/US 08/01446

A. CLASSIFICATION OF SUBJECT MATTER
IPC(8) - H04M 11/04 (2008.04)
USPC - 455/404.2
According to International Patent Classification (IPC) or to both national classification and IPC

B. FIELDS SEARCHED

Minimum documentation searched (classification system followed by classification symbols)
USPC: 455/404.2

Documentation searched other than minimum documentation to the extent that such documents are included in the fields searched
USPC: 455/404.2; 455/456.2 (text search - see terms below)

Electronic data base consulted during the international search (name of data base and, where practicable, search terms used)
PubWEST(USPT,PGPB,EPAB,JPAB); Google
Search Terms: grid, location, wireless, nmr, network measurement report, calibration, cluster, wireless, random, non-uniform

C. DOCUMENTS CONSIDERED TO BE RELEVANT

Category*	Citation of document, with indication, where appropriate, of the relevant passages	Relevant to claim No.
X – Y	WO/2000/034799 A1 (HILSENRATH et al.) 15 June 2000 (15.06.2000), entire document especially pages 3, 26, 28, 30-31, and 33-34	1-3, 5-6, 13-14, 17-27, 29-30, 37-38, and 41-46 4, 7-12, 15-16, 28, 31-36, and 39-40
Y	US 2006/0030333 A1 (WARD et al.) 09 February 2006 (09.02.2006), entire document especially para [0122]	4 and 28
Y	US 2005/0243936 A1 (AGRAWALA et al.) 03 November 2005 (03.11.2005), entire document especially paras [0046] and [0089]-[0097].	7-12, 15-16, 31-36, and 39-40
A	US 6,871,077 B2 (KENNEDY) 22 March 2005 (22.03.2005), entire document	1-46
A	US 2006/0240843 A1 (SPAIN et al.) 26 October 2006 (26.10.2006), entire document	1-46

☐ Further documents are listed in the continuation of Box C. ☐

* Special categories of cited documents:
"A" document defining the general state of the art which is not considered to be of particular relevance
"E" earlier application or patent but published on or after the international filing date
"L" document which may throw doubts on priority claim(s) or which is cited to establish the publication date of another citation or other special reason (as specified)
"O" document referring to an oral disclosure, use, exhibition or other means
"P" document published prior to the international filing date but later than the priority date claimed
"T" later document published after the international filing date or priority date and not in conflict with the application but cited to understand the principle or theory underlying the invention
"X" document of particular relevance; the claimed invention cannot be considered novel or cannot be considered to involve an inventive step when the document is taken alone
"Y" document of particular relevance; the claimed invention cannot be considered to involve an inventive step when the document is combined with one or more other such documents, such combination being obvious to a person skilled in the art
"&" document member of the same patent family

Date of the actual completion of the international search	Date of mailing of the international search report
08 May 2008 (08.05.2008)	01 JUL 2008
Name and mailing address of the ISA/US Mail Stop PCT, Attn: ISA/US, Commissioner for Patents P.O. Box 1450, Alexandria, Virginia 22313-1450 Facsimile No. 571-273-3201	Authorized officer: Lee W. Young PCT Helpdesk: 571-272-4300 PCT OSP: 571-272-7774

Form PCT/ISA/210 (second sheet) (April 2007)

PATENT ABSTRACTS OF JAPAN

(11)Publication number : 06-347529

(43)Date of publication of application : 22.12.1994

(51)Int.Cl. G01S 3/14

(21)Application number : 05-135996

(22)Date of filing : 07.06.1993

(71)Applicant : NEC CORP

(72)Inventor : TANAKA MOTOYASU
ATOKAWA AKIHISA
TERASAWA NOBUO

(54) METHOD AND DEVICE FOR MEASURING BEARING

(57)Abstract:

PURPOSE: To resolve and measure the bearing of interference wave including a coherent signal (also called as a multi-path signal), in which arrival wave are correlated with each other completely at the same frequency, by an array antenna having optional array elements and arrangement.

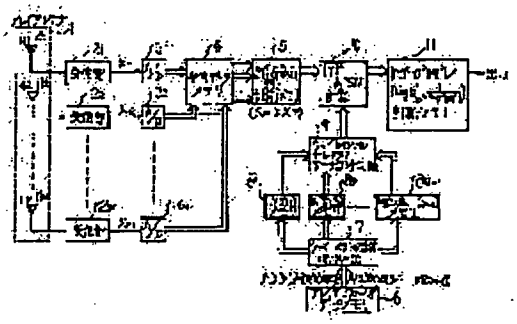

CONSTITUTION: The device is provided with an A/D converter 3 which divides receiving signals, that are received by an array antenna consisting of M pieces of array element, into real and imaginary parts to convert them into receiving data, a circuit 5 to find out a covariance matrix from the receiving data, and a circuit 11 to calculate an evaluation function relevant to inner noise in connection with the covariance matrix and array manifold, and it detects the combination of arrival bearings by which the evaluation function is minimized.

LEGAL STATUS

[Date of request for examination] 07.06.1993

[Date of sending the examiner's decision of rejection]	
[Kind of final disposal of application other than the examiner's decision of rejection or application converted registration]	
[Date of final disposal for application]	
[Patent number]	2630200
[Date of registration]	18.04.1997
[Number of appeal against examiner's decision of rejection]	
[Date of requesting appeal against examiner's decision of rejection]	
[Date of extinction of right]	

Copyright (C); 1998,2003 Japan Patent Office

* NOTICES *

JPO and NCIPI are not responsible for any
damages caused by the use of this translation.

1.This document has been translated by computer. So the translation may not reflect the original precisely.
2.**** shows the word which can not be translated.
3.In the drawings, any words are not translated.

DETAILED DESCRIPTION

[Detailed Description of the Invention]
[0001]
[Industrial Application] This invention relates to the bearing measuring method equipment using the super RIZORYUSHON (superresolution) technique which decomposes and measures bearing of an interference wave where two or more incoming waves exist in the same frequency, and its equipment.
[0002]
[Description of the Prior Art] Bearing of an interference wave where two or more incoming waves exist in the same frequency was decomposed using the array component of arbitration, and the array antennas of an array array, and since the method of MUSIC (MUltiple SIgnal Classification) is very efficient as a ****** super RIZORYUSHON technique, it came to be put in practical use in recent years. The method of MUSIC was also called the "characteristic value part solution method" or "characteristic vector method", it was announced by 1981R.O.Schmidt, and research of relation has been made by the researcher of after that many. the following -- R. "O.Schmidt, MultipleEmitter Locaticn and Signal Parameter Estimation" (it is called IEEE TRANSACTION ON ANTENNA AND PROPAGATION, VOL.AP-34.NO, 3PP.276-280, MARCH 1986, and the following reference 1) -- reference -- carrying out -- MUSIC -- the bearing measuring method by law is explained.
[0003] The input signal received with the array antennas which consist of M array components serves as line type association with the input signal (an arrival fraction is assumed to be D) of D individual, and the internal noise of a receiver. It is as follows when this is expressed in procession.
[0004]

$$\begin{bmatrix} X_1 \\ X_2 \\ \\ X_M \end{bmatrix} = \begin{bmatrix} a(\theta_1)\, a(\theta_2) \cdots a(\theta_D) \end{bmatrix} \begin{bmatrix} F_1 \\ F_2 \\ \\ F_D \end{bmatrix} + \begin{bmatrix} N_1 \\ N_2 \\ \\ N_M \end{bmatrix}$$

$$X = AF + N \qquad \text{---}(1)$$

[0005] It is vector X=(X1 X2 -- XM) T here. They are M input signals (complex). Moreover, matrix A= (a(theta 1) a (theta 2) -- [a (thetaD) is called an array manifold (array manifold), and the column vector a(theta) =(a1 thetaa2 theta--aM theta) T is the response (complex) of the array antennas to Bearing theta, and is called a mode vector or a steering vector.]) When the linear independence of a (theta) is guaranteed at 0 degree < theta<360 degrees, it is equivalent to the ability of Bearing theta to be found that a (theta) can be found. Vector F=(F1 F2 -- FD) T It is the

input signal (complex) of D individual. Vector N=(N1 N2 -- NM) T It is the internal noise (henceforth a noise) of M receivers, and assumes [having not correlated mutually and]. Moreover, since it is easy, all of M noise power are sigma2 equally. It carries out and it is assumed by prior measurement etc. that it is known. Namely, [0006]

$$|\overline{N_1}|^2 = |\overline{N_2}|^2 = \cdots\cdots \quad |\overline{N_M}|^2 = \sigma^2 \text{（既知）}$$

[0007] ** -- although assumed -- this assumption -- generality -- ****** -- it is not a thing. T expresses the transpose of a matrix and a bar expresses the average here. Next, it is [0008] when the covariance matrix (covariance matrix) of (1) type is set to S.

$$S = \overline{XX^H} = A\overline{FF^H}A^H + \overline{NN^H}$$

[0009] A next door, [0010]

$$S = APA^H + \sigma^2 I \qquad \cdots (2)$$

[0011] It is expressed. However, H expressed complex-conjugate transposition and assumes [having not correlated and] the input signal and the noise. Moreover, [0012]

$$P = \overline{FF^H} \qquad \cdots (3)$$

[0013] It is called a ****** matrix of correlation or the power matrix (power matrix) of an input signal, and becomes a positive-definite value (positive delinite). I is a unit matrix. Since the rank (rank: rank) of the signal matrix of correlation P will serve as D supposing it supposes that D<M, i.e., the number of input signals, is smaller than several M of an array component here and there is no perfect correlation between input signals, it is APAH. A rank also serves as D. It is [0014] when the characteristic value of M pieces of a covariance matrix S is arranged in order of magnitude at this time.

$$\underbrace{\lambda_1, \lambda_2, \cdots\cdots, \lambda_D}_{\text{入力信号の固有値}}, \underbrace{\lambda_{D+1}, \cdots\cdots, \lambda_M}_{\text{雑音の固有値}}$$

$$\cdots (4)$$

[0015] It becomes and is [0016] further.

$$\lambda_{D+1} = \lambda_{D+2} = \cdots = \lambda_M = \sigma^2 \text{（最小固有値）}$$

$$\cdots (5)$$

[0017] It becomes. Moreover, characteristic vector E corresponding to such characteristic value is [0018].

$$\left.\begin{aligned} E &= (E_S E_N) \\ E_S &= (E_1 E_2 \cdots E_D) \\ E_N &= (E_{D+1} E_{D+2} \cdots E_M) \end{aligned}\right\} (6)$$

[0019] It becomes. However, ES lambda 1 - lambdaD The signal subspace of the measuring line type space E is stretched by the corresponding signal-space characteristic vector, and it is EN. lambdaD+1 - lambdaM The noise subspace of E is stretched by the corresponding noise space characteristic vector. Moreover, ES EN It is in orthogonality relation (EN is the orthocomplement of ES).

[0020]

$$E = E_S \dotplus E_N \quad (\dotplus : \text{直和(direct sum)}) \qquad \text{--- (7)}$$

[0021] It becomes. This is based on the following reasons. Characteristic vector E SE=lambdaE (8)
It ****** and is especially lambda=sigma 2. At the time SEN =sigma2 EN (9)
It is [0022] when a next door and (2) types are substituted for (9) types.

$$(APA^H + \sigma^2 I)E_N = \sigma^2 E_N$$

$$APA^H E_N = 0$$

$$E_N^H APA^H E_N = (A^H E_N)^H P (A^H E_N) = 0 \qquad \text{--- (10)}$$

[0023] It becomes. (10) Set at a ceremony and the ** matrix A is a full rank (that all bearings of an incoming wave differ, and equivalence).
** Matrix P (positive-definite value) is a full rank (that there is no perfect correlation between input signals, and equivalence).
In the ** case AH EN =0 (11)
Since it is an array manifold (set of the mode vector of the incoming wave of D individual), a next door and Matrix A are the signal subspace ES. It belongs and is ES. EN It intersects perpendicularly. Therefore, characteristic vector [as opposed to / decompose the characteristic value of a covariance matrix S and / the minimum characteristic value] EN It asks and they are the mode vectors a (theta) and EN. The inverse number of the square of Euclidean distance
[0024]

$$\frac{1}{a^H(\theta) E_N E_N^H a(\theta)} \qquad \text{--- (12)}$$

[0025] If consider a performance index, and take out the mode vector a of a certain bearing theta (theta), theta is changed over 0 degree - 360 degrees out of all 0<theta<360-degree array manifolds, (12) types are calculated and a peak (peak) is searched for, bearing of the interference wave of D individual can be decomposed and presumed. In addition, in displaying, when it takes the logarithm of (12) types, since it is convenient, it is [0026].

$$10 \log_{10}\left(\frac{1}{a^H(\theta) E_N E_N^H a(\theta)}\right)$$

[0027] ****** may be performed.
[0028] The configuration of the conventional example explained above is shown in drawing 2 . The signal received in two or more array antennas 1 (11 -1M) and receive sections (21 -2M) by drawing 2 is changed into the digital data of real part and imaginary part with A/D converter 3 (31-3M), and is stored in the receiving data memory 4. The received data read from memory 4 are sent to covariance-matrix count / memory circuit 5, and a covariance matrix S is called for. The characteristic value / characteristic vector count / memory circuit 12 which receives this process (4), (5), (6), and (7) types, and asks for a characteristic vector. This output is sent to the circuit 14 which asks for (12) evaluation-of-expression function, and the performance index for bearing measurement is searched for.
[0029]
[Problem(s) to be Solved by the Invention] MUSIC by the reference 1 mentioned above -- there are the following troubles in law. That is, when it includes the coherent signal (or multi-pass signal) which has perfect correlation in the part between the input signals of D individual, the rank of the signal matrix of correlation P becomes smaller than D, and it becomes impossible to

decompose the characteristic value of the input signal of a covariance matrix S into D individual therefore, and it is the signal-space characteristic vector ES. And ES Noise space characteristic vector EN which has the relation of orthocomplement Asking correctly becomes impossible. Even if (11) types stop realizing and calculate (12) types, it becomes impossible therefore, to presume bearing of an incoming wave at this time. As an approach improved so that bearing of an interference wave including such a coherent signal might be decomposed and bearing could be presumed correctly, there is an approach of "tooth-space SHARU smoothing (Spatial Smoothing)." this approach -- MUSIC of drawing 2 -- in the example of law, when array antennas 1 are made into a regular-intervals linear array, application in the case where a coherent signal is included is enabled. "**** Tie-Jum shan and Mazi Wax, AND Thomas Kajlath and On Spatial Smoothing for Direction of-Arrival Estimation of Coherent Signals" () [IEEE TRANSACTION] ON Acastcs, SPEECH, AND SIGNAL PROCESING, VOL.ASSP-33, NO.4, pp 806-811, AUGUST It depends for calling it 1985 and the following reference 2. However, there is a trouble that the number of incoming waves inapplicable to the array component and array array of (1) arbitration in which (2) presumption is possible becomes M/2 (MUSIC about [in the case of law] 1/2) or less in SUPESHARU smoothing.

[0030]

[Means for Solving the Problem] This invention is for decomposing and presuming bearing of a total input signal between input signals also in the case of an interference wave including a coherent signal with perfect correlation, it can apply to the array component and array array of arbitration, and the number of the maximum presumption incoming waves maintains an individual (M-1) (MUSIC law and the same number). Even if the coherent signal was intermingled in order to take the process which decomposes the characteristic value of a covariance matrix S by the MUSIC method, and asks for a characteristic vector, it diagonalized S when the signal matrix of correlation P stopped having been a full rank, and it calculated characteristic value, since it was no longer what decomposed the input signal correctly, it became presumed impossible.

[0031] Even when it does not take but a coherent signal is intermingled with the following means, the process which this invention asks for characteristic value and a characteristic vector decomposes the arrival bearing of total ******, and makes presumption possible. In this invention, in order to solve a problem, the following wait vectors W are introduced. W=(W1 W2 -- WM) T (13)

The multiplication of the ********** value of W is carried out to an input signal X. If a multiplication result is set to Y Y=WH X (14)

It becomes. Furthermore, it is the square average of Y [0032]

$\overline{|Y|^2}$

[0033] It is [0034] when it carries out.

$$\overline{|Y|^2} = \overline{YY^*} = \overline{W^H X X^H W} = W^H \overline{XX^H} W = W^H S W$$

(＊は複素共役を表わす) ---(15)

[0035] It becomes. It is [0036] when (2) types are substituted for (15) types here.

$$\overline{|Y|^2} = W^H(APA^H + \sigma^2 I)\,W$$

$$= W^H APA^H W + \sigma^2 \|W\|^2$$

$$= (A^H W)^H P (A^H W) + \sigma^2 \|W\|^2$$

ただし $\|W\|$は Wのノルム(norm)を表わす。

----(16)

[0037] It becomes. Moreover, if (16) types are transformed, the following performance indices can be acquired.
[0038]

$$|Y|^2 - \sigma^2 \|W\|^2 = (A^H W)^H P (A^H W) \qquad \text{---- (17)}$$

[0039] (17) From a formula AH W=0 (18)
the wait vector W with which like fills [****** primary] a formula -- MUSIC from contrast of (11) types -- noise space characteristic vector EN to the minimum characteristic value in law It turns out that it is equivalent. It is EN to calculate the characteristic value of a covariance matrix S in this invention without carrying out. Performance index which solves the simultaneous equation of (18) equations, searches for the equivalent wait vector W directly, and is calculated from a covariance matrix S and the wait vector W ((15) equations and (17) equations)
[0040]

$$|Y|^2 - \sigma^2 \|W\|^2 = W^H S W - \sigma^2 \|W\|^2 \qquad \text{--- (19)}$$

[0041] It is characterized by using and presuming arrival bearing. Therefore, since this invention does not need the full rank conditions of the signal matrix of correlation P, even when a coherent signal is intermingled, it can decompose and presume the arrival bearing of a total input signal. Moreover, it sets at (19) ceremony and the internal-noise power of a receiver is [0042] in a sigma12, sigma22 --, and sigmaM2 and barrack case.

$$\sigma^2 \|W\|^2$$

[0043] It is [0044] to instead of.

$$(\sigma_1^2 |W_1|^2 + \sigma_2^2 |W_2|^2 + \text{----} + \sigma_M^2 |W_M|^2)$$

[0045] What is necessary is just to use.
[0046]
[Function] Although the wait vector W searched for from the simultaneous equation of (18) equations in this invention is determined only from the element of the array manifold (theta) A a, i.e., a mode vector, since the arrival fraction D is strange, the number of incoming waves needs to ask for W about each case to 1- (M-1). Namely, [0047]

$$\left.\begin{array}{ll} \text{到来波数が1の場合} : & W(\theta_1) \\ \text{到来波数が2の場合} : & W(\theta_1, \theta_2) \\ \vdots & \vdots \\ \text{到来波数が(M-1)の場合} : & W(\theta_1, \theta_2, \cdots \theta_{M-1}) \\ & (0^\circ \leq \theta_1, \theta_2, \cdots, \theta_{M-1} < 360^\circ) \end{array}\right\} (20)$$

[0048] Moreover, the reason the number of the maximum presumption incoming waves is set to (M-1) is the array manifold AH. It is because the maximum of D for having a solution effective [the matrix AH W of (18) types] except becoming Dx1 matrix and all the elements of W being set to 0 (zero) since a DxM matrix and the wait vector W are Mx1 matrices is set to (M-1). (20) Since wait ** KUTORU W is the combination (combination) of arrival bearing as shown in a formula, bearing of a total input signal will be presumed to coincidence. For example, when D is (M-1), it is theta 1, theta 2, --thetaM-1. Only when combination is presumed correctly, with regards to the rank of the signal matrix of correlation P, there is nothing and a performance-index (19) type can be made into minimum [0(zero)]. On the contrary, when arrival bearing is able to be investigated in combination [it is called a combination search (combination search) below] and (19) evaluation-of-expression function is able to be made into min, it means that the arrival

bearing (put together) of a total input signal was called for.
[0049]
[Example] Next, this invention is explained to **** with reference to a drawing. Drawing 1 is the block diagram showing the configuration of the example of this invention. In drawing 1 , array antennas 1, a receive section 2, the A/D-conversion section 3 that has the function which decomposes an input signal into real part and imaginary part, the receiving data memory 4, the S (covariance matrix) count / memory circuit 5, and the array manifold data memory 6 are provided, and this is as common as the conventional example. That is, the input signal to array antennas 1 to the process of this invention and the MUSIC method which asks for a covariance matrix S using configuration blocks 2, 3, 4, and 5 is the same. However, unlike the MUSIC method, this invention is [0050] by the wait vector W which is the output of a covariance matrix S, and the wait vector selector / search control circuit 9 which count of the characteristic value decomposition / characteristic vector by the characteristic value / characteristic vector count / memory circuit of drawing 2 is not performed, but is an output of 5 to (15) type count circuit 10.

$$|\overline{Y}|^2 = W^H S W \qquad \text{--- (15)}$$

[0051] It calculates. boil a circuit 9 memory 6 -- [0052] which is calculated by the wait calculus-of-vectors circuit 7, and is stored in the wait vector memory 8 from all the stored 0 degree - 360 degrees array manifold data

$$W(\theta_1),\ W(\theta_1, \theta_2), ---, W(\theta_1, \theta_2, ---, \theta_{M-1})$$

[0053] Drawing and a combination search are performed for a ** wait vector. Next, the output of the count circuit 10 is [0054].

$$\left| |\overline{Y}|^2 - \sigma^2 \|W\|^2 \right| \ / \ 10 \log 10 \left(\frac{1}{\left| |\overline{Y}|^2 - \sigma^2 \|W\|^2 \right|} \right)$$

[0055] It is sent to count / memory circuit 11, and is [0056].

$$\left| |\overline{Y}|^2 - \sigma^2 \|W\|^2 \right|$$

(絶対値をとるのは±の符号は評価上不要のため)

[0057] And it is [0058] for a display.

$$10 \log 10 \left(\frac{1}{\left| |\overline{Y}|^2 - \sigma^2 \|W\|^2 \right|} \right)$$

[0059] It calculates and stores. It is [0060] by combination search.

$$10 \log 10 \left(\frac{1}{|\overline{Y}|^2 - \sigma^2 \|W\|^2} \right)$$

[0061] theta 1 used as a ** peak, theta 2, --thetaD It becomes the combination of the arrival bearing for which combination asks, and the arrival bearing of the interference wave on which a coherent signal is intermingled can be decomposed and presumed. moreover, the array component and array array of arbitration -- applicable -- the number of the maximum presumption incoming waves -- MUSIC -- law -- being the same (M-1) -- it becomes.
[0062]
[Effect of the Invention] Also in the case of an interference wave including the coherent signal which has perfect correlation in a feeling of an incoming wave, according to this invention, bearing of them can be decomposed and presumed as explained above. Moreover, in the array component of arbitration, and an array array, it can apply, and the bearing measuring device with which the number of incoming waves which can be presumed turns into (the array element

number M-1) can be realized.

[Translation done.]

PATENT COOPERATION TREATY

From the INTERNATIONAL SEARCHING AUTHORITY

RECEIVED
DUANE MORRIS, LLP
JUL 07 2008

PCT

To:
MARK C. COMTOIS
DUANE MORRIS LLP
505 9TH STREET, NW
SUITE 1000
WASHINGTON, DC 20004

NOTIFICATION OF TRANSMITTAL OF THE INTERNATIONAL SEARCH REPORT AND THE WRITTEN OPINION OF THE INTERNATIONAL SEARCHING AUTHORITY, OR THE DECLARATION

(PCT Rule 44.1)

	Date of mailing *(day/month/year)* 01 JUL 2008
Applicant's or agent's file reference AND01 076 PCT	**FOR FURTHER ACTION** See paragraphs 1 and 4 below
International application No. PCT/US 08/01446	International filing date *(day/month/year)* 04 February 2008 (04.02.2008)
Applicant ANDREW CORPORATION	

DOCKETED

1. ☒ The applicant is hereby notified that the international search report and the written opinion of the International Searching Authority have been established and are transmitted herewith.

   Filing of amendments and statement under Article 19:
   The applicant is entitled, if he so wishes, to amend the claims of the international application (see Rule 46):

   When? The time limit for filing such amendments is normally two months from the date of transmittal of the international search report.

   Where? Directly to the International Bureau of WIPO, 34 chemin des Colombettes 1211 Geneva 20, Switzerland, Facsimile No.: +41 22 740 14 35

   For more detailed instructions, see the notes on the accompanying sheet.

2. ☐ The applicant is hereby notified that no international search report will be established and that the declaration under Article 17(2)(a) to that effect and the written opinion of the International Searching Authority are transmitted herewith.

3. ☐ **With regard to the protest** against payment of (an) additional fee(s) under Rule 40.2, the applicant is notified that:

   ☐ the protest together with the decision thereon has been transmitted to the International Bureau together with the applicant's request to forward the texts of both the protest and the decision thereon to the designated Offices.

   ☐ no decision has been made yet on the protest; the applicant will be notified as soon as a decision is made.

4. **Reminders**

   Shortly after the expiration of **18 months** from the priority date, the international application will be published by the International Bureau. If the applicant wishes to avoid or postpone publication, a notice of withdrawal of the international application, or of the priority claim, must reach the International Bureau as provided in Rules 90*bis*.1 and 90*bis*.3, respectively, before the completion of the technical preparations for international publication.

   The applicant may submit comments on an informal basis on the written opinion of the International Searching Authority to the International Bureau. The International Bureau will send a copy of such comments to all designated Offices unless an international preliminary examination report has been or is to be established. These comments would also be made available to the public but not before the expiration of 30 months from the priority date.

   Within **19 months** from the priority date, but only in respect of some designated Offices, a demand for international preliminary examination must be filed if the applicant wishes to postpone the entry into the national phase **until 30 months** from the priority date (in some Offices even later); otherwise, the applicant must, **within 20 months** from the priority date, perform the prescribed acts for entry into the national phase before those designated Offices.

   In respect of other designated Offices, the time limit of **30 months** (or later) will apply even if no demand is filed within 19 months.

   See the Annex to Form PCT/IB/301 and, for details about the applicable time limits, Office by Office, see the *PCT Applicant's Guide*, Volume II, National Chapters and the WIPO Internet site.

Name and mailing address of the ISA/US Mail Stop PCT, Attn: ISA/US Commissioner for Patents P.O. Box 1450, Alexandria, Virginia 22313-1450 Facsimile No. 571-273-3201	Authorized officer: Lee W. Young PCT Helpdesk: 571-272-4300 PCT OSP: 571-272-7774

PATENT COOPERATION TREATY

PCT

INTERNATIONAL SEARCH REPORT

(PCT Article 18 and Rules 43 and 44)

Applicant's or agent's file reference AND01 076 PCT	**FOR FURTHER ACTION**	see Form PCT/ISA/220 as well as, where applicable, item 5 below.
International application No. PCT/US 08/01446	International filing date *(day/month/year)* 04 February 2008 (04.02.2008)	(Earliest) Priority Date *(day/month/year)* 05 February 2007 (05.02.2007)
Applicant ANDREW CORPORATION		

This international search report has been prepared by this International Searching Authority and is transmitted to the applicant according to Article 18. A copy is being transmitted to the International Bureau.

This international search report consists of a total of 2 sheets.

☐ It is also accompanied by a copy of each prior art document cited in this report.

1. **Basis of the report**
   a. With regard to the **language**, the international search was carried out on the basis of:
      ☒ the international application in the language in which it was filed.
      ☐ a translation of the international application into _____ which is the language of a translation furnished for the purposes of international search (Rules 12.3(a) and 23.1(b)).
   b. ☐ This international search report has been established taking into account the **rectification of an obvious mistake** authorized by or notified to this Authority under Rule 91 (Rule 43.6*bis*(a)).
   c. ☐ With regard to any **nucleotide and/or amino acid sequence** disclosed in the international application, see Box No. I.

2. ☐ **Certain claims were found unsearchable** (see Box No. II).

3. ☐ **Unity of invention is lacking** (see Box No. III).

4. With regard to the **title**,
   ☒ the text is approved as submitted by the applicant.
   ☐ the text has been established by this Authority to read as follows:

5. With regard to the **abstract**,
   ☒ the text is approved as submitted by the applicant.
   ☐ the text has been established, according to Rule 38.2(b), by this Authority as it appears in Box No. IV. The applicant may, within one month from the date of mailing of this international search report, submit comments to this Authority.

6. With regard to the **drawings**,
   a. the figure of the **drawings** to be published with the abstract is Figure No. _____
      ☐ as suggested by the applicant.
      ☐ as selected by this Authority, because the applicant failed to suggest a figure.
      ☐ as selected by this Authority, because this figure better characterizes the invention.
   b. ☒ none of the figures is to be published with the abstract.

INTERNATIONAL SEARCH REPORT

International application No.
PCT/US 08/01446

A. CLASSIFICATION OF SUBJECT MATTER
IPC(8) - H04M 11/04 (2008.04)
USPC - 455/404.2
According to International Patent Classification (IPC) or to both national classification and IPC

B. FIELDS SEARCHED

Minimum documentation searched (classification system followed by classification symbols)
USPC: 455/404.2

Documentation searched other than minimum documentation to the extent that such documents are included in the fields searched
USPC: 455/404.2; 455/456.2 (text search - see terms below)

Electronic data base consulted during the international search (name of data base and, where practicable, search terms used)
PubWEST(USPT,PGPB,EPAB,JPAB); Google
Search Terms: grid, location, wireless, nmr, network measurement report, calibration, cluster, wireless, random, non-uniform

C. DOCUMENTS CONSIDERED TO BE RELEVANT

Category*	Citation of document, with indication, where appropriate, of the relevant passages	Relevant to claim No.
X – Y	WO/2000/034799 A1 (HILSENRATH et al.) 15 June 2000 (15.06.2000), entire document especially pages 3, 26, 28, 30-31, and 33-34	1-3, 5-6, 13-14, 17-27, 29-30, 37-38, and 41-46 4, 7-12, 15-16, 28, 31-36, and 39-40
Y	US 2006/0030333 A1 (WARD et al.) 09 February 2006 (09.02.2006), entire document especially para [0122]	4 and 28
Y	US 2005/0243936 A1 (AGRAWALA et al.) 03 November 2005 (03.11.2005), entire document especially paras [0046] and [0089]-[0097].	7-12, 15-16, 31-36, and 39-40
A	US 6,871,077 B2 (KENNEDY) 22 March 2005 (22.03.2005), entire document	1-46
A	US 2006/0240843 A1 (SPAIN et al.) 26 October 2006 (26.10.2006), entire document	1-46

☐ Further documents are listed in the continuation of Box C. ☐

* Special categories of cited documents:
"A" document defining the general state of the art which is not considered to be of particular relevance
"E" earlier application or patent but published on or after the international filing date
"L" document which may throw doubts on priority claim(s) or which is cited to establish the publication date of another citation or other special reason (as specified)
"O" document referring to an oral disclosure, use, exhibition or other means
"P" document published prior to the international filing date but later than the priority date claimed
"T" later document published after the international filing date or priority date and not in conflict with the application but cited to understand the principle or theory underlying the invention
"X" document of particular relevance; the claimed invention cannot be considered novel or cannot be considered to involve an inventive step when the document is taken alone
"Y" document of particular relevance; the claimed invention cannot be considered to involve an inventive step when the document is combined with one or more other such documents, such combination being obvious to a person skilled in the art
"&" document member of the same patent family

Date of the actual completion of the international search	Date of mailing of the international search report
08 May 2008 (08.05.2008)	01 JUL 2008
Name and mailing address of the ISA/US Mail Stop PCT, Attn: ISA/US, Commissioner for Patents P.O. Box 1450, Alexandria, Virginia 22313-1450 Facsimile No. 571-273-3201	Authorized officer: Lee W. Young PCT Helpdesk: 571-272-4300 PCT OSP: 571-272-7774

Form PCT/ISA/210 (second sheet) (April 2007)

PTO/SB/08a (01-10)
Approved for use through 07/31/2012. OMB 0651-0031
U.S. Patent and Trademark Office; U.S. DEPARTMENT OF COMMERCE
Under the Paperwork Reduction Act of 1995, no persons are required to respond to a collection of information unless it contains a valid OMB control number.

INFORMATION DISCLOSURE STATEMENT BY APPLICANT (**Not for submission under 37 CFR 1.99)**		
	Application Number	12424320
	Filing Date	2009-04-15
	First Named Inventor	Alles, et al.
	Art Unit	3662
	Examiner Name	Phan, Dao Linda
	Attorney Docket Number	AND01 082 CONT

U.S.PATENTS

Examiner Initial*	Cite No	Patent Number	Kind Code[1]	Issue Date	Name of Patentee or Applicant of cited Document	Pages,Columns,Lines where Relevant Passages or Relevant Figures Appear
	1					

If you wish to add additional U.S. Patent citation information please click the Add button.

U.S.PATENT APPLICATION PUBLICATIONS

Examiner Initial*	Cite No	Publication Number	Kind Code[1]	Publication Date	Name of Patentee or Applicant of cited Document	Pages,Columns,Lines where Relevant Passages or Relevant Figures Appear
	1					

If you wish to add additional U.S. Published Application citation information please click the Add button.

FOREIGN PATENT DOCUMENTS

Examiner Initial*	Cite No	Foreign Document Number[3]	Country Code[2] i	Kind Code[4]	Publication Date	Name of Patentee or Applicant of cited Document	Pages,Columns,Lines where Relevant Passages or Relevant Figures Appear	T[5]
	1	06-347529	JP		1994-12-22	NEC CORP		☐
	2	06/088472	WO		2006-08-24	Anderson, Robert, J		☐

If you wish to add additional Foreign Patent Document citation information please click the Add button

NON-PATENT LITERATURE DOCUMENTS

INFORMATION DISCLOSURE STATEMENT BY APPLICANT (Not for submission under 37 CFR 1.99)		
	Application Number	12424320
	Filing Date	2009-04-15
	First Named Inventor	Alles, et al.
	Art Unit	3662
	Examiner Name	Phan, Dao Linda
	Attorney Docket Number	AND01 082 CONT

Examiner Initials*	Cite No	Include name of the author (in CAPITAL LETTERS), title of the article (when appropriate), title of the item (book, magazine, journal, serial, symposium, catalog, etc), date, pages(s), volume-issue number(s), publisher, city and/or country where published.	T[5]
✓	1	Y. ZHAO, "Standardization of Mobile Phone Positioning for 3G Systems," IEEE Communications Magazine, July 2002, D pp.108-116.	☐
✓	2	C. DRANE, M. MACNAUGHTAN, and C. SCOTT, "Positioning GSM Telephones," IEEE Communications Magazine, April1998, pp.46-54, 59.	☐
✓	3	J. CAFFERY, JR., and G. STUBER, "Overview of Radiolocation in COMA Cellular Systems," IEEE Communications Magazine, April 1998, pp.38-45.	☐
✓	4	T. RAPPAPORT, J.H. REED and B.D. WOERNER, "Position Location Using Wireless Communications on Highways of the Future, IEEE Communications Magazine, October 1996, pp.33-41.	☐
✓	5	I. ZISKIND and M. WAX, "Maximum Likelihood Localization of Multiple Sources by Alternating Projection," IEEE Transactions on Acoustics, Speech, and Signal Porcessing, Volume 36, No. 10, pp.1553-1560, October 1988.	☐
✓	6	G.W.K. COLMAN, "A Comparison of the Accuracy of TDOA and TOA Location Algorithms with Equivalent Receiver Geometry," Defence R&D Canada Technical Memorandum (DREO TM 2001-063), October 2001, pp.1-53	☐
✓	7	L. MAILAENDER, "On the Geolocation Bounds for Round-Trip Time-of-Arrival and All Non-Line-of-Sight Channels", EURASIP Journal on Advances in Signal Processing, Volume 2008, pp.1-10	☐
✓	8	N. AGARWAL, L. CHAUDRAN-WADI, andV. APTE, "Capacity Analysis of the GSM Short Message Service", Indian Institute ofTechnology Bombay, www.cse.iitb.ac.inl-varsha/allpapers/wireless/ncc03cam.pdf, 2004, pp.1-5	☐
✓	9	J.D. BARD, and F.M. HAM, 'Time Difference of Arrival Dilution of Precision and Applications," IEEE Transactions on Signal Processing, Volume 47, No.2, pp.521-523, February 1999.	☐
✓	10	K.C. HO, and W. XU, "An Accurate Algebraic Solution for Moving Source Location Using TDOA and FDOA Measurements", IEEE Transactions on Signal Processing, Volume 52, No.9 •. September 2004, pp.2453-2463	☐

INFORMATION DISCLOSURE STATEMENT BY APPLICANT (Not for submission under 37 CFR 1.99)		
	Application Number	12424320
	Filing Date	2009-04-15
	First Named Inventor	Alles, et al.
	Art Unit	3662
	Examiner Name	Phan, Dao Linda
	Attorney Docket Number	AND01 082 CONT

	11	C.H. KNAPP and G.C. CARTER, "The Generalized Correlation Method for Estimation of Time Delay," IEEE Transactions on Acoustics, Speech, and Signal Processing, Volume ASSP-24, No. 4, August 1976, pp.320-327	☐
	12	M. RAHNEMA, "Overview of the GSM System and Protocol Architecture," IEEE Communications Magazine, April 1993, pp.92-100	☐
	13	S. STEIN, "Algorithms for Ambiguity Function Processing," IEEE Transactions on Acoustics, Speech, and Signal Processing, Volume ASSP-29, No.3, June 1981, pp.588-599	☐
	14	M. VANDERVEEN, C. B. PAPADIAS, and A. PAULRAJ, "Joint Angle and Delay Estimation (JADE) for Multipath Signals Arriving at an Antenna Array", IEEE Communications Letters, Volume 1, No. 1, January 1997, pp.12-14	☐
	15	M. WAX and I. ZISKIND, "On Unique Localization of Multiple Sources by Passive Sensor Arrays," IEEE Transactions on Acoustics, Speech, and Signal Processing, Volume 37, No.7, July 1989, pp.996-1000	☐
	16	B. YANG, "Projection Approximation Subspace Tracking," IEEE Transactions on Signal Processing, Volume 43, No.1, January 1995, pp.95-107	☐
	17	A.J. PAULRAJ, C.B. PAPADIAS, "Space-Time Processing for Wireless Communications", IEEE Signal Processing Magazine, Vol. 11, November 1997, pp.49-83	☐
	18	C.B. PAPADIAS, A.J. PAULRAJ , "Space-Time Signal Processing for Wireless Communications: A Survey", Information Systems Laboratory, Stanford University	☐
	19	M. HAARDT, C. BRUNNER, J. NOSSEK, "Joint Estimation of 2-D Arrival Angles, Propagation Delays, and Doppler Frequencies in Wireless Communications," Proc. IEEE Digital Signal Processing Workshop, Volume 1, pages 1-4, Bryce Canyon National Park, Utah, August 1998	☐
	20	MATI WAX, "Position Location from Sensors with Position Uncertainty," IEEE Transactions Aerospace and Electronic Systems, Volume AES-19, No.5, September 1983, pp.658-662	☐
	21	D.J. TORRIERI, "Statistical Theory of Passive Location Systems", IEEE Transactions Aerospace and Electronic Systems, Volume AES-20, No. 2, March 1984, pp.183-198	☐

INFORMATION DISCLOSURE STATEMENT BY APPLICANT (Not for submission under 37 CFR 1.99)		
	Application Number	12424320
	Filing Date	2009-04-15
	First Named Inventor	Alles, et al.
	Art Unit	3662
	Examiner Name	Phan, Dao Linda
	Attorney Docket Number	AND01 082 CONT

	22	Y.T. CHAN and K.C. HO, "A Simple and Efficient Estimator for Hyperbolic Location", IEEE Transactions Signal Processing, Volume 42, No. 8, August 1994, pp.1905-1915	☐
	23	W.H. FOY, "Position-Location Solutions by Taylor-Series Estimation", IEEE Transactions Aerospace and Electronic Systems, Volume AES-12, No.2, March 1976, pp.187-194	☐
	24	R.G. STANSFIELD, "Statistical Theory of OF Fixing", Journal IEE 94, Part III A, October 1947, pp.762-770	☐
	25	M.P. WYLIE and J. HOLTZMAN, "The Non-Line of Sight Problem in Mobile Location Estimation", Process IEEE 5th International Conference on Universal Personal Communications, Vol. 2, October 1996, pp.827-831	☐
	26	L.CONG and W. ZHUANG, "Non-Line-of-Sight Error Mitigation in TDOA Mobile Location", Process IEEE Global Telecommunications Conference, Volume 1, September 2001, pp.680-684	☐
	27	P.C. CHEN, "A Non-Line-of-Sight Error Mitigation Algorithm in Location Estimation", Process IEEE Conference on Wireless Communications Networking, Volume 1, 1999, pp.316-320	☐
	28	N.J. THOMAS, D.G.M. CRUICKSHANK and D. I. LAURENSON, "Performance of a TDOA-AOA Hybrid Mobile Location System", 3G Mobile Communication Technologies, Conference Publication No. 477, March 2001, pp.216-220	☐
	29	J. CAFFERY, JR., and G. STUBER, "Subscriber Location in COMA Cellular Networks," IEEE Transactions on Vehicular Technology, Volume 47, No.2, May 1998, pp.406-416	☐
	30	M.SILVENTOINEN and T. RANTALAINEN, "Mobile Station Emergency Locating in GSM", Process IEEE International D Conference, Personal Wireless Communications, Volume 1, 1996, pp.232-238.	☐
	31	AMIR LESHEM, MATI WAX, "Array Calibration in the Presence of Multipath," IEEE Transactions on Signal Processing, Vol. 48, No. 1, pp.53-59, January 2000	☐
	32	XIN WANG, ZONGXIN WANG and BOB O'DEA, "A TOA-Based Location Algorithm Reducing the Errors Due to Non-Line-of-Sight (NLOS) Propagation," IEEE Trans. Vehicular Technology, Vol. 52, No.1, January 2003, pp.112-116	☐

INFORMATION DISCLOSURE STATEMENT BY APPLICANT (Not for submission under 37 CFR 1.99)		
	Application Number	12424320
	Filing Date	2009-04-15
	First Named Inventor	Alles, et al.
	Art Unit	3662
	Examiner Name	Phan, Dao Linda
	Attorney Docket Number	AND01 082 CONT

	33	M. VANDERVEEN, C. PAPADIAS, A. PAULRAJ, "Joint Angle and Delay Estimation (JADE) for Multipath Signals Arriving at an Antenna Array," IEEE Communications Letters, Vol. 1, No.1, January 1997, pp.12-14	☐
	34	R. SCHMIDT, "Multiple Emitter Location and Signal Parameter Estimation," IEEE Transactions on Antennas and Propagation, Vol. AP-34, No. 3, March 1986, pp.276-280	☐
	35	Y. CHEN, M. ZOLTOWSKI, "Joint Angle and Delay Estimation for DS-CDMA with Application to Reduced Dimension Space-Time Rake Receivers," March 1999, pp.2933-2936	☐

If you wish to add additional non-patent literature document citation information please click the Add button

EXAMINER SIGNATURE

Examiner Signature		Date Considered	

*EXAMINER: Initial if reference considered, whether or not citation is in conformance with MPEP 609. Draw line through a citation if not in conformance and not considered. Include copy of this form with next communication to applicant.

[1] See Kind Codes of USPTO Patent Documents at www.USPTO.GOV or MPEP 901.04. [2] Enter office that issued the document, by the two-letter code (WIPO Standard ST.3). [3] For Japanese patent documents, the indication of the year of the reign of the Emperor must precede the serial number of the patent document. [4] Kind of document by the appropriate symbols as indicated on the document under WIPO Standard ST.16 if possible. [5] Applicant is to place a check mark here if English language translation is attached.

INFORMATION DISCLOSURE STATEMENT BY APPLICANT (Not for submission under 37 CFR 1.99)		
	Application Number	12424320
	Filing Date	2009-04-15
	First Named Inventor	Alles, et al.
	Art Unit	3662
	Examiner Name	Phan, Dao Linda
	Attorney Docket Number	AND01 082 CONT

CERTIFICATION STATEMENT

Please see 37 CFR 1.97 and 1.98 to make the appropriate selection(s):

☐ That each item of information contained in the information disclosure statement was first cited in any communication from a foreign patent office in a counterpart foreign application not more than three months prior to the filing of the information disclosure statement. See 37 CFR 1.97(e)(1).

OR

☐ That no item of information contained in the information disclosure statement was cited in a communication from a foreign patent office in a counterpart foreign application, and, to the knowledge of the person signing the certification after making reasonable inquiry, no item of information contained in the information disclosure statement was known to any individual designated in 37 CFR 1.56(c) more than three months prior to the filing of the information disclosure statement. See 37 CFR 1.97(e)(2).

☐ See attached certification statement.

☐ The fee set forth in 37 CFR 1.17 (p) has been submitted herewith.

☒ A certification statement is not submitted herewith.

SIGNATURE

A signature of the applicant or representative is required in accordance with CFR 1.33, 10.18. Please see CFR 1.4(d) for the form of the signature.

Signature	/Mark C. Comtois/	Date (YYYY-MM-DD)	2012-04-18
Name/Print	Mark C. Comtois	Registration Number	46285

This collection of information is required by 37 CFR 1.97 and 1.98. The information is required to obtain or retain a benefit by the public which is to file (and by the USPTO to process) an application. Confidentiality is governed by 35 U.S.C. 122 and 37 CFR 1.14. This collection is estimated to take 1 hour to complete, including gathering, preparing and submitting the completed application form to the USPTO. Time will vary depending upon the individual case. Any comments on the amount of time you require to complete this form and/or suggestions for reducing this burden, should be sent to the Chief Information Officer, U.S. Patent and Trademark Office, U.S. Department of Commerce, P.O. Box 1450, Alexandria, VA 22313-1450. DO NOT SEND FEES OR COMPLETED FORMS TO THIS ADDRESS. **SEND TO: Commissioner for Patents, P.O. Box 1450, Alexandria, VA 22313-1450.**

Electronic Acknowledgement Receipt

EFS ID:	12566982
Application Number:	12424320
International Application Number:	
Confirmation Number:	1334
Title of Invention:	METHOD TO MODIFY CALIBRATION DATA USED TO LOCATE A MOBILE UNIT
First Named Inventor/Applicant Name:	Martin Alles
Customer Number:	79172
Filer:	Mark Charles Comtois/laureen ponder
Filer Authorized By:	Mark Charles Comtois
Attorney Docket Number:	AND01 082 CONT
Receipt Date:	18-APR-2012
Filing Date:	15-APR-2009
Time Stamp:	11:04:58
Application Type:	Utility under 35 USC 111(a)

Payment information:

Submitted with Payment	no

File Listing:

Document Number	Document Description	File Name	File Size(Bytes)/ Message Digest	Multi Part /.zip	Pages (if appl.)
1	Amendment/Req. Reconsideration-After Non-Final Reject	AND01082CONT.pdf	85796 c059be807f6ab9f5f7a2464dce749181f8ef4080	no	3

Warnings:

Information:

2	Non Patent Literature	06088472.pdf	1740330 0cf0b3f483eb23e19f558b6c754915fc488bfa71	no	41
Warnings:					
Information:					
3	Non Patent Literature	06347529.pdf	712580 306450f558c66ef86dcddaba1069687b41091aaa	no	12
Warnings:					
Information:					
4	Non Patent Literature	ART1.pdf	1060511 4a9a733e964cb3ecee5991d78328c55faa2dea66	no	10
Warnings:					
Information:					
5	Non Patent Literature	ART2.pdf	998367 c6bed9800ad1ac12ff69919695e1ed28892d6176	no	10
Warnings:					
Information:					
6	Non Patent Literature	ART3.pdf	971117 e58fff3bbb56337867a114c7b6cb638a85c5cb56	no	9
Warnings:					
Information:					
7	Non Patent Literature	ART4.pdf	1294276 497aaed9a985558ca765b936ce7c2664f3b5a908	no	10
Warnings:					
Information:					
8	Non Patent Literature	ART5.pdf	590410 5ecc4b6ec5c3d2640f8362d2501b9e3ab1d8e6a0	no	10
Warnings:					
Information:					
9	Non Patent Literature	ART6.pdf	1353226 2c3d558fe991bde995519d47d36d7aedb99d09d9	no	53
Warnings:					
Information:					
10	Non Patent Literature	ART7.pdf	633725 0ee6777eb5bcf2aca5635702694f0477b6ea5668	no	10
Warnings:					
Information:					

11	Non Patent Literature	ART9.pdf	301371 61e793e53f816eb570ba1facf1b25c9116bbd0de	no	4
Warnings:					
Information:					
12	Non Patent Literature	ART10.pdf	979913 1c053fb20003fad3c80d1e7f42d02ce6b0fd892a	no	12
Warnings:					
Information:					
13	Non Patent Literature	ART12.pdf	759782 d0eb214b0f82a0598dda1423514d30faca6d6b8d	no	9
Warnings:					
Information:					
14	Information Disclosure Statement (IDS) Form (SB08)	082CONTIDS.pdf	677605 a32314a8b43f722d8f59e64df9bd87879cadfe6b	no	6
Warnings:					
Information:					
This is not an USPTO supplied IDS fillable form					
15	Non Patent Literature	ART13.pdf	1374076 f03e27fd9c102e815065a0c052a3906b6f36f96d	no	15
Warnings:					
Information:					
16	Non Patent Literature	ART14.pdf	307661 c2049a39f9352f04f6b9e7c4362066420bc025e8	no	5
Warnings:					
Information:					
17	Non Patent Literature	ART15.pdf	502708 b3ee2735d0eeba6f62850ad87915f1d968808ed2	no	7
Warnings:					
Information:					
18	Non Patent Literature	ART16.pdf	1175608 5b80c57f1ec70109d96915cd3e6d3b77fc99dfbc	no	14
Warnings:					
Information:					
19	Non Patent Literature	ART17.pdf	442519 37de378890b1fee76e16f30f6ca9be1897204327	no	7

Warnings:					
Information:					
20	Non Patent Literature	ART18.pdf	392556 6e8f3988548bf5c0fb38a64e637f21dd1d7bcc63	no	5
Warnings:					
Information:					
21	Non Patent Literature	ART19.pdf	216761 c45328762b0581f8d8a757eb87fb1ce65d95a837	no	3
Warnings:					
Information:					
22	Non Patent Literature	ART20.pdf	475772 264c5d1b43d2b9b15a886e7c5fba17a52c2149d8	no	5
Warnings:					
Information:					
23	Non Patent Literature	ART21.pdf	379004 63cc12c6dcd77298f901168965b3e402620044ff	no	4
Warnings:					
Information:					
24	Non Patent Literature	ART22.pdf	4394024 2f2f4a0dac3173eb8f3e93630b584db9387a9476	no	35
Warnings:					
Information:					
25	Non Patent Literature	ART23.pdf	427198 f50ae6f6e9f8b08557438160d53bc55d1585313a	no	4
Warnings:					
Information:					
26	Non Patent Literature	ART24.pdf	337453 e74ab0bf038ce433aaf4c6efdfdda066bf255641	no	4
Warnings:					
Information:					
27	Non Patent Literature	ART25.pdf	432585 4b7b78add9d10f255867f1c22de7a0c626e21171	no	5
Warnings:					
Information:					
28	Non Patent Literature	ART26.pdf	1055910 496eafa86627f22038de7a383c5326440bbe9766	no	16

Warnings:					
Information:					
29	Non Patent Literature	ART27.pdf	706398 cfc39c4176090f608ff6ede95c71e459335ba3b2	no	11
Warnings:					
Information:					
30	Non Patent Literature	ART28.pdf	751109 5c76c9f4df4a999a0bc008b1c7f16e092c03ee2a	no	8
Warnings:					
Information:					
31	Non Patent Literature	ART29.pdf	3048469 5df135adb9a414d3ee853d32cb4f9073bbe745cb	no	9
Warnings:					
Information:					
32	Non Patent Literature	ART30.pdf	399369 59671097deabef73eb521597dac7e7a9a9f4082d	no	5
Warnings:					
Information:					
33	Non Patent Literature	ART31.pdf	425842 f1ce827cf365d37d004f05805c57351bfa813ab4	no	5
Warnings:					
Information:					
34	Non Patent Literature	ART33.pdf	431735 884a8f943c321dc42a50e0050590c3ab4ff25a1a	no	5
Warnings:					
Information:					
35	Non Patent Literature	ART34.pdf	817258 bcd77d949244b6845026150d524262a8669f670a	no	11
Warnings:					
Information:					
36	Non Patent Literature	ART36.pdf	508240 19185e91c34a5e08df9a4f99bba28660057394f0	no	7
Warnings:					
Information:					
			Total Files Size (in bytes):	31161264	

This Acknowledgement Receipt evidences receipt on the noted date by the USPTO of the indicated documents, characterized by the applicant, and including page counts, where applicable. It serves as evidence of receipt similar to a Post Card, as described in MPEP 503.

New Applications Under 35 U.S.C. 111
If a new application is being filed and the application includes the necessary components for a filing date (see 37 CFR 1.53(b)-(d) and MPEP 506), a Filing Receipt (37 CFR 1.54) will be issued in due course and the date shown on this Acknowledgement Receipt will establish the filing date of the application.

National Stage of an International Application under 35 U.S.C. 371
If a timely submission to enter the national stage of an international application is compliant with the conditions of 35 U.S.C. 371 and other applicable requirements a Form PCT/DO/EO/903 indicating acceptance of the application as a national stage submission under 35 U.S.C. 371 will be issued in addition to the Filing Receipt, in due course.

New International Application Filed with the USPTO as a Receiving Office
If a new international application is being filed and the international application includes the necessary components for an international filing date (see PCT Article 11 and MPEP 1810), a Notification of the International Application Number and of the International Filing Date (Form PCT/RO/105) will be issued in due course, subject to prescriptions concerning national security, and the date shown on this Acknowledgement Receipt will establish the international filing date of the application.

UNITED STATES PATENT AND TRADEMARK OFFICE

UNITED STATES DEPARTMENT OF COMMERCE
United States Patent and Trademark Office
Address: COMMISSIONER FOR PATENTS
P.O. Box 1450
Alexandria, Virginia 22313-1450
www.uspto.gov

APPLICATION NO.	FILING DATE	FIRST NAMED INVENTOR	ATTORNEY DOCKET NO.	CONFIRMATION NO.
12/424,320	04/15/2009	Martin Alles	AND01 082 CONT	1334

79172 7590 04/09/2012
Duane Morris LLP
505 9th Street, N.W.
Suite 1000
Washington, DC 20004

EXAMINER
PHAN, DAO LINDA

ART UNIT	PAPER NUMBER
3646	

MAIL DATE	DELIVERY MODE
04/09/2012	PAPER

Please find below and/or attached an Office communication concerning this application or proceeding.

The time period for reply, if any, is set in the attached communication.

PTOL-90A (Rev. 04/07)

Office Action Summary	Application No.	Applicant(s)	
	12/424,320	ALLES ET AL.	
	Examiner	Art Unit	
	Dao Phan	3662	

-- The MAILING DATE of this communication appears on the cover sheet with the correspondence address --

Period for Reply

A SHORTENED STATUTORY PERIOD FOR REPLY IS SET TO EXPIRE 2 MONTH(S) OR THIRTY (30) DAYS, WHICHEVER IS LONGER, FROM THE MAILING DATE OF THIS COMMUNICATION.

- Extensions of time may be available under the provisions of 37 CFR 1.136(a). In no event, however, may a reply be timely filed after SIX (6) MONTHS from the mailing date of this communication.
- If NO period for reply is specified above, the maximum statutory period will apply and will expire SIX (6) MONTHS from the mailing date of this communication.
- Failure to reply within the set or extended period for reply will, by statute, cause the application to become ABANDONED (35 U.S.C. § 133). Any reply received by the Office later than three months after the mailing date of this communication, even if timely filed, may reduce any earned patent term adjustment. See 37 CFR 1.704(b).

Status

1)☒ Responsive to communication(s) filed on *24 January 2012*.

2a)☐ This action is **FINAL**. 2b)☐ This action is non-final.

3)☐ An election was made by the applicant in response to a restriction requirement set forth during the interview on _____; the restriction requirement and election have been incorporated into this action.

4)☒ Since this application is in condition for allowance except for formal matters, prosecution as to the merits is closed in accordance with the practice under *Ex parte Quayle*, 1935 C.D. 11, 453 O.G. 213.

Disposition of Claims

5)☒ Claim(s) *1-52* is/are pending in the application.

5a) Of the above claim(s) _____ is/are withdrawn from consideration.

6)☒ Claim(s) *1-52* is/are allowed.

7)☐ Claim(s) _____ is/are rejected.

8)☐ Claim(s) _____ is/are objected to.

9)☐ Claim(s) _____ are subject to restriction and/or election requirement.

Application Papers

10)☐ The specification is objected to by the Examiner.

11)☐ The drawing(s) filed on _____ is/are: a)☐ accepted or b)☐ objected to by the Examiner.

Applicant may not request that any objection to the drawing(s) be held in abeyance. See 37 CFR 1.85(a).

Replacement drawing sheet(s) including the correction is required if the drawing(s) is objected to. See 37 CFR 1.121(d).

12)☐ The oath or declaration is objected to by the Examiner. Note the attached Office Action or form PTO-152.

Priority under 35 U.S.C. § 119

13)☐ Acknowledgment is made of a claim for foreign priority under 35 U.S.C. § 119(a)-(d) or (f).

a)☐ All b)☐ Some * c)☐ None of:

1.☐ Certified copies of the priority documents have been received.

2.☐ Certified copies of the priority documents have been received in Application No. _____.

3.☐ Copies of the certified copies of the priority documents have been received in this National Stage application from the International Bureau (PCT Rule 17.2(a)).

* See the attached detailed Office action for a list of the certified copies not received.

Attachment(s)

1) ☐ Notice of References Cited (PTO-892)

2) ☐ Notice of Draftsperson's Patent Drawing Review (PTO-948)

3) ☒ Information Disclosure Statement(s) (PTO/SB/08) Paper No(s)/Mail Date _____.

4) ☐ Interview Summary (PTO-413) Paper No(s)/Mail Date. _____ .

5) ☐ Notice of Informal Patent Application

6) ☐ Other: _____.

1) Copies of references (FOREIGN PATENT DOCUMENTS and NON-PATENT LITERATURE DOCUMENTS) listed on PTO-1449 filed on 11/22/2010 were not received by the office. According, these references have not been cited in compliance with 37 CFR 1.98(b) and will not be made of record until the appropriate references are provided.
2) The disclosure is objected to because of the following informalities: a period is missing after the end of paragraphs [0066] and [0067].

   Appropriate correction is required.
3) Claims 1-52 are allowed.
4) Any inquiry concerning this communication or earlier communications from the examiner should be directed to Dao Phan whose telephone number is (571)272-6976. The examiner can normally be reached on M-F 9:00-5:30.

   If attempts to reach the examiner by telephone are unsuccessful, the examiner's supervisor, Thomas Tarcza can be reached on (571)272-6979. The fax phone number for the organization where this application or proceeding is assigned is 571-273-8300.

Information regarding the status of an application may be obtained from the Patent Application Information Retrieval (PAIR) system. Status information for published applications may be obtained from either Private PAIR or Public PAIR. Status information for unpublished applications is available through Private PAIR only. For more information about the PAIR system, see http://pair-direct.uspto.gov. Should you have questions on access to the Private PAIR system, contact the Electronic Business Center (EBC) at 866-217-9197 (toll-free). If you would like assistance from a USPTO Customer Service Representative or access to the automated information system, call 800-786-9199 (IN USA OR CANADA) or 571-272-1000.

/Dao Phan/
Primary Examiner, Art Unit 3646

EAST Search History

EAST Search History (Prior Art)

Ref #	Hits	Search Query	DBs	Default Operator	Plurals	Time Stamp
L1	601601	calibrat$6	US-PGPUB; USPAT; USOCR; FPRS; EPO; JPO; DERWENT; IBM_TDB	OR	OFF	2012/03/15 11:38
L2	4754413	measure$6	US-PGPUB; USPAT; USOCR; FPRS; EPO; JPO; DERWENT; IBM_TDB	OR	OFF	2012/03/15 11:39
L3	4418617	compare$3 or comparing	US-PGPUB; USPAT; USOCR; FPRS; EPO; JPO; DERWENT; IBM_TDB	OR	OFF	2012/03/15 11:39
L4	76134	3 same 1	US-PGPUB; USPAT; USOCR; FPRS; EPO; JPO; DERWENT; IBM_TDB	OR	OFF	2012/03/15 11:40
L5	63408	4 and 2	US-PGPUB; USPAT; USOCR; FPRS; EPO; JPO; DERWENT; IBM_TDB	OR	OFF	2012/03/15 11:40
L6	2480301	network$2	US-PGPUB; USPAT; USOCR; FPRS; EPO; JPO; DERWENT; IBM_TDB	OR	OFF	2012/03/15 11:40
L7	65039	6 near7 2	US-PGPUB; USPAT; USOCR; FPRS; EPO; JPO; DERWENT; IBM_TDB	OR	OFF	2012/03/15 11:40
L8	2013	5 and 7	US-PGPUB; USPAT; USOCR; FPRS; EPO; JPO; DERWENT; IBM_TDB	OR	OFF	2012/03/15 11:41
L9	5585	3 same 7	US-PGPUB; USPAT; USOCR; FPRS; EPO; JPO; DERWENT; IBM_TDB	OR	OFF	2012/03/15 11:41
L10	390	9 and 8	US-PGPUB; USPAT; USOCR; FPRS; EPO; JPO; DERWENT; IBM_TDB	OR	OFF	2012/03/15 11:41

3/15/2012 11:44:31 AM

PTO/SB/08a (05-07)
Approved for use through 09/30/2007. OMB 0651-0031
U.S. Patent and Trademark Office; U.S. DEPARTMENT OF COMMERCE
Under the Paperwork Reduction Act of 1995, no persons are required to respond to a collection of information unless it contains a valid OMB control number.

INFORMATION DISCLOSURE STATEMENT BY APPLICANT

(Not for submission under 37 CFR 1.99)

Application Number	12424320
Filing Date	2009-04-15
First Named Inventor	ALLES et al.
Art Unit	3662
Examiner Name	PHAN, DAO LINDA
Attorney Docket Number	AND01 082 CONT

U.S.PATENTS

Examiner Initial*	Cite No	Patent Number	Kind Code[1]	Issue Date	Name of Patentee or Applicant of cited Document	Pages,Columns,Lines where Relevant Passages or Relevant Figures Appear
	1	7593738	B2	2009-09-22	Anderson	
	2	7440762	B2	2005-07-07	Maloney et al.	
	3	7427952	B2	2006-11-23	Bull et al.	
	4	7340259	B2	2008-03-04	Maloney	
	5	7271765	B2	2005-09-22	Stilp et al.	
	6	7167713	B2	2007-01-23	Anderson	
	7	7023383	B2	2006-04-04	Stilp et al.	
	8	6996392	B2	2006-02-07	Anderson	

 ALL REFERENCES CONSIDERED EXCEPT WHERE LINED THROUGH. /D.P./

INFORMATION DISCLOSURE STATEMENT BY APPLICANT (Not for submission under 37 CFR 1.99)		
	Application Number	12424320
	Filing Date	2009-04-15
	First Named Inventor	ALLES et al.
	Art Unit	3662
	Examiner Name	PHAN, DAO LINDA
	Attorney Docket Number	AND01 082 CONT

	9	6876859	B2	2005-04-05	Anderson et al.	
	10	6873290	B2	2005-03-29	Anderson et al.	
	11	6782264	B2	2004-08-24	Anderson	
	12	6771625	B1	2004-08-03	Beal	
	13	6765531	B2	2004-07-20	Anderson	
	14	6661379	B2	2003-12-09	Stilp et al.	
	15	6646604	B2	2003-11-11	Anderson	
	16	6603428	B2	2003-08-05	Stilp	
	17	6563460	B2	2003-05-13	Stilp et al.	
	18	6546256	B1	2003-04-08	Maloney	
	19	6519465	B2	2003-02-11	Stilp et al.	

 ALL REFERENCES CONSIDERED EXCEPT WHERE LINED THROUGH. /D.P./

INFORMATION DISCLOSURE STATEMENT BY APPLICANT (Not for submission under 37 CFR 1.99)		
	Application Number	12424320
	Filing Date	2009-04-15
	First Named Inventor	ALLES et al.
	Art Unit	3662
	Examiner Name	PHAN, DAO LINDA
	Attorney Docket Number	AND01 082 CONT

	20	6492944	B1	2002-12-10	Stilp	
	21	6483460	B2	2002-11-19	Stilp et al.	
	22	6463290	B1	2002-10-08	Stilp et al.	
	23	6400320	B1	2002-06-04	Stilp et al.	
	24	6388618	B1	2002-05-14	Stilp et al.	
	25	6366241	B2	2002-04-02	Pack	
	26	6351235	B1	2002-02-26	Stilp	
	27	6334059	B1	2001-12-25	Stilp et al.	
	28	6317604	B1	2001-11-13	Kovach, Jr. et al.	
	29	6317081	B1	2001-11-13	Stilp	
	30	6288676	B1	2001-09-11	Maloney	

 ALL REFERENCES CONSIDERED EXCEPT WHERE LINED THROUGH. /D.P./

INFORMATION DISCLOSURE STATEMENT BY APPLICANT (Not for submission under 37 CFR 1.99)		
	Application Number	12424320
	Filing Date	2009-04-15
	First Named Inventor	ALLES et al.
	Art Unit	3662
	Examiner Name	PHAN, DAO LINDA
	Attorney Docket Number	AND01 082 CONT

	31	6288675	B1	2001-09-11	Maloney	
	32	6285321	B1	2001-09-04	Stilp et al.	
	33	6281834	B1	2001-08-28	Stilp	
	34	6266013	B1	2001-07-24	Stilp et al.	
	35	6184829	B1	2001-02-06	Stilp	
	36	6172644	B1	2001-01-09	Stilp	
	37	6127975	A	2000-10-03	Maloney	
	38	6119013	A	2000-09-12	Maloney et al.	
	39	6115599	A	2000-09-05	Stilp	
	40	6108555	A	2000-08-22	Maloney et al.	
	41	6101178	A	2000-08-08	Beal	

 ALL REFERENCES CONSIDERED EXCEPT WHERE LINED THROUGH. /D.P./

INFORMATION DISCLOSURE STATEMENT BY APPLICANT (Not for submission under 37 CFR 1.99)		
	Application Number	12424320
	Filing Date	2009-04-15
	First Named Inventor	ALLES et al.
	Art Unit	3662
	Examiner Name	PHAN, DAO LINDA
	Attorney Docket Number	AND01 082 CONT

	42	6097336	A	2000-08-01	Stilp	
	43	6091362	A	2000-07-18	Stilp	
	44	6047192	A	2000-04-04	Maloney	
	45	5959580	A	1999-09-28	Maloney et al.	
	46	5608410	A	1997-03-04	Stilp et al.	
	47	5327144	A	1994-07-05	Stilp et al.	
	48	4728959	A	1988-03-01	Maloney	

If you wish to add additional U.S. Patent citation information please click the Add button.

U.S.PATENT APPLICATION PUBLICATIONS

Examiner Initial*	Cite No	Publication Number	Kind Code[1]	Publication Date	Name of Patentee or Applicant of cited Document	Pages,Columns,Lines where Relevant Passages or Relevant Figures Appear
	1	20080160952	A1	2008-07-03	Bull, et al.	
	2	20080160953	A1	2008-07-03	Mia, et al.	

If you wish to add additional U.S. Published Application citation information please click the Add button.

 ALL REFERENCES CONSIDERED EXCEPT WHERE LINED THROUGH. /D.P./

INFORMATION DISCLOSURE STATEMENT BY APPLICANT (Not for submission under 37 CFR 1.99)		
	Application Number	12424320
	Filing Date	2009-04-15
	First Named Inventor	ALLES et al.
	Art Unit	3662
	Examiner Name	PHAN, DAO LINDA
	Attorney Docket Number	AND01 082 CONT

FOREIGN PATENT DOCUMENTS

Examiner Initial*	Cite No	Foreign Document Number[3]	Country Code[2] i	Kind Code[4]	Publication Date	Name of Patentee or Applicant of cited Document	Pages,Columns,Lines where Relevant Passages or Relevant Figures Appear	T[5]
	1	06088472	WO	A1	2006-08-24	Anderson et al.		☐

If you wish to add additional Foreign Patent Document citation information please click the Add button

NON-PATENT LITERATURE DOCUMENTS

Examiner Initials*	Cite No	Include name of the author (in CAPITAL LETTERS), title of the article (when appropriate), title of the item (book, magazine, journal, serial, symposium, catalog, etc), date, pages(s), volume-issue number(s), publisher, city and/or country where published.	T[5]
	1		☐

If you wish to add additional non-patent literature document citation information please click the Add button

EXAMINER SIGNATURE

Examiner Signature	/Dao Phan/	Date Considered	03/23/2012

*EXAMINER: Initial if reference considered, whether or not citation is in conformance with MPEP 609. Draw line through a citation if not in conformance and not considered. Include copy of this form with next communication to applicant.

[1] See Kind Codes of USPTO Patent Documents at www.USPTO.GOV or MPEP 901.04. [2] Enter office that issued the document, by the two-letter code (WIPO Standard ST.3). [3] For Japanese patent documents, the indication of the year of the reign of the Emperor must precede the serial number of the patent document. [4] Kind of document by the appropriate symbols as indicated on the document under WIPO Standard ST.16 if possible. [5] Applicant is to place a check mark here if English language translation is attached.

 ALL REFERENCES CONSIDERED EXCEPT WHERE LINED THROUGH. /D.P./

PTO/SB/08a (05-07)
Approved for use through 09/30/2007. OMB 0651-0031
U.S. Patent and Trademark Office; U.S. DEPARTMENT OF COMMERCE
Under the Paperwork Reduction Act of 1995, no persons are required to respond to a collection of information unless it contains a valid OMB control number.

INFORMATION DISCLOSURE STATEMENT BY APPLICANT **(Not for submission under 37 CFR 1.99)**	Application Number	12424320
	Filing Date	2009-04-15
	First Named Inventor	Martin ALLES, et al.
	Art Unit	3661
	Examiner Name	Unassigned
	Attorney Docket Number	AND01 082 CONT

U.S.PATENTS						
Examiner Initial*	Cite No	Patent Number	Kind Code[1]	Issue Date	Name of Patentee or Applicant of cited Document	Pages,Columns,Lines where Relevant Passages or Relevant Figures Appear
	1	6871077	B2	2005-03-22	Kennedy	
	2	7298314	B2	2007-11-20	Schantz, et al.	
If you wish to add additional U.S. Patent citation information please click the Add button.						

U.S.PATENT APPLICATION PUBLICATIONS						
Examiner Initial*	Cite No	Publication Number	Kind Code[1]	Publication Date	Name of Patentee or Applicant of cited Document	Pages,Columns,Lines where Relevant Passages or Relevant Figures Appear
	1	20060030333	A1	2006-02-09	Ward, et al.	
	2	20050243936	A1	2005-11-03	Agrawala, et al.	
	3	20060240843	A1	2006-10-26	Spain, et al.	
	4	20020172223	A1	2002-11-21	Stilp	

138 ALL REFERENCES CONSIDERED EXCEPT WHERE LINED THROUGH. /D.P./

INFORMATION DISCLOSURE STATEMENT BY APPLICANT (Not for submission under 37 CFR 1.99)	Application Number	12424320
	Filing Date	2009-04-15
	First Named Inventor	Martin ALLES, et al.
	Art Unit	3661
	Examiner Name	Unassigned
	Attorney Docket Number	AND01 082 CONT

	5	20050093745	A1	2005-05-05	Krumm, et al.	

If you wish to add additional U.S. Published Application citation information please click the Add button.

FOREIGN PATENT DOCUMENTS

Examiner Initial*	Cite No	Foreign Document Number[3]	Country Code[2] i	Kind Code[4]	Publication Date	Name of Patentee or Applicant of cited Document	Pages,Columns,Lines where Relevant Passages or Relevant Figures Appear	T[5]
	1	2000034799	WO	A1	2000-06-15	Hilsenrath, et al.		☐

If you wish to add additional Foreign Patent Document citation information please click the Add button

NON-PATENT LITERATURE DOCUMENTS

Examiner Initials*	Cite No	Include name of the author (in CAPITAL LETTERS), title of the article (when appropriate), title of the item (book, magazine, journal, serial, symposium, catalog, etc), date, pages(s), volume-issue number(s), publisher, city and/or country where published.	T[5]
	1		☐

If you wish to add additional non-patent literature document citation information please click the Add button

EXAMINER SIGNATURE

Examiner Signature	/Dao Phan/	Date Considered	03/23/2012

*EXAMINER: Initial if reference considered, whether or not citation is in conformance with MPEP 609. Draw line through a citation if not in conformance and not considered. Include copy of this form with next communication to applicant.

[1] See Kind Codes of USPTO Patent Documents at www.USPTO.GOV or MPEP 901.04. [2] Enter office that issued the document, by the two-letter code (WIPO Standard ST.3). [3] For Japanese patent documents, the indication of the year of the reign of the Emperor must precede the serial number of the patent document. [4] Kind of document by the appropriate symbols as indicated on the document under WIPO Standard ST.16 if possible. [5] Applicant is to place a check mark here if English language translation is attached.

139 ALL REFERENCES CONSIDERED EXCEPT WHERE LINED THROUGH. /D.P./

PTO/SB/08a (05-07)
Approved for use through 09/30/2007. OMB 0651-0031
U.S. Patent and Trademark Office; U.S. DEPARTMENT OF COMMERCE
Under the Paperwork Reduction Act of 1995, no persons are required to respond to a collection of information unless it contains a valid OMB control number.

INFORMATION DISCLOSURE STATEMENT BY APPLICANT

(Not for submission under 37 CFR 1.99)

Application Number	12424320
Filing Date	2009-04-15
First Named Inventor	ALLES et al.
Art Unit	3662
Examiner Name	PHAN, DAO LINDA
Attorney Docket Number	AND01 082 CONT

U.S.PATENTS

Examiner Initial*	Cite No	Patent Number	Kind Code[1]	Issue Date	Name of Patentee or Applicant of cited Document	Pages,Columns,Lines where Relevant Passages or Relevant Figures Appear
	1	6952158	B2	2005-10-04	Kennedy, Jr.	
	2	6922170	B2	2005-07-26	Alexander, Jr.	
	3	6871077	B2	2005-03-22	Kennedy, Jr.	
	4	6845240	B2	2005-01-18	Carlson et al.	
	5	6839539		2005-01-04	Durrant, et al.	
	6	6834234	B2	2004-12-21	Scherzinger et al.	
	7	6771969	B1	2004-08-03	Chinoy	
	8	6640106	B2	2003-10-28	Gutowski et al.	

 ALL REFERENCES CONSIDERED EXCEPT WHERE LINED THROUGH. /D.P./

INFORMATION DISCLOSURE STATEMENT BY APPLICANT (Not for submission under 37 CFR 1.99)		
	Application Number	12424320
	Filing Date	2009-04-15
	First Named Inventor	ALLES et al.
	Art Unit	3662
	Examiner Name	PHAN, DAO LINDA
	Attorney Docket Number	AND01 082 CONT

	9	6603761	B1	2003-08-05	Wang	
	10	6571082	B1	2003-05-27	Rahman	
	11	6553322	B1	2003-04-22	Ignagni	
	12	6501955	B1	2002-12-31	Durrant et al.	
	13	6477161	B1	2002-11-05	Hudson	
	14	6470195	B1	2002-10-22	Meyer	
	15	6407703	B1	2002-06-18	Minter et al.	
	16	6311043	B1	2001-10-30	Haardt et al.	
	17	6295455	B1	2001-09-25	Fischer et al.	
	18	6246884	B1	2001-06-12	Karmi et al.	
	19	6233459	B1	2001-05-15	Sullivan et al.	

 ALL REFERENCES CONSIDERED EXCEPT WHERE LINED THROUGH. /D.P./

INFORMATION DISCLOSURE STATEMENT BY APPLICANT (Not for submission under 37 CFR 1.99)		
	Application Number	12424320
	Filing Date	2009-04-15
	First Named Inventor	ALLES et al.
	Art Unit	3662
	Examiner Name	PHAN, DAO LINDA
	Attorney Docket Number	AND01 082 CONT

	20	6212319	B1	2001-04-03	Cayrefourcq	
	21	6201499	B1	2001-03-13	Hawkes et al.	
	22	6191738	B1	2001-02-20	Pfeil et al.	
	23	6188351	B1	2001-02-13	Bloebaum	
	24	6144711	A	2000-11-07	Raleigh et al.	
	25	5973643	A	1999-10-26	Hawkes et al.	
	26					
	27	5920278	A	1999-07-06	Tyler et al.	
	28	5870029	A	1999-02-09	Otto et al.	
	29	5825887	A	1998-10-20	Lennen	
	30	5815538	A	1998-09-29	Grell et al.	

 ALL REFERENCES CONSIDERED EXCEPT WHERE LINED THROUGH. /D.P./

INFORMATION DISCLOSURE STATEMENT BY APPLICANT (Not for submission under 37 CFR 1.99)	Application Number	12424320
	Filing Date	2009-04-15
	First Named Inventor	ALLES et al.
	Art Unit	3662
	Examiner Name	PHAN, DAO LINDA
	Attorney Docket Number	AND01 082 CONT

	31	5736964	A	1998-04-07	Ghosh et al.	
	32	5675344	A	1997-10-07	Tong et al.	
	33	5614914	A	1997-03-25	Bolgiano et al.	
	34	5592180	A	1997-01-07	Yokev et al.	
	35	5559864	A	1996-09-24	Kennedy	
	36	5519760	A	1996-05-21	Borkowski et al.	
	37	5515419	A	1996-05-07	Sheffer	
	38	5512908	A	1996-04-30	Herrick	
	39	5508708	A	1996-04-16	Ghosh et al.	
	40	5506864	A	1996-04-09	Schilling	
	41	5506863	A	1996-04-09	Meidan et al.	

 ALL REFERENCES CONSIDERED EXCEPT WHERE LINED THROUGH. /D.P./

INFORMATION DISCLOSURE STATEMENT BY APPLICANT (Not for submission under 37 CFR 1.99)		
	Application Number	12424320
	Filing Date	2009-04-15
	First Named Inventor	ALLES et al.
	Art Unit	3662
	Examiner Name	PHAN, DAO LINDA
	Attorney Docket Number	AND01 082 CONT

	42	5465289	A	1995-11-07	Kennedy	
	43	5404376	A	1995-04-04	Dent	
	44	5365544	A	1994-11-15	Schilling	
	45	5317323	A	1994-05-31	Kennedy et al.	
	46	5218618	A	1993-06-08	Sagey	
	47	5056106	A	1991-10-08	Wang	
	48	4891650	A	1990-01-02	Sheffer	
	49	4845504	A	1989-07-04	Roberts et al.	
	50	4814751	A	1989-03-21	Hawkins	

If you wish to add additional U.S. Patent citation information please click the Add button.

U.S.PATENT APPLICATION PUBLICATIONS

Examiner Initial*	Cite No	Publication Number	Kind Code[1]	Publication Date	Name of Patentee or Applicant of cited Document	Pages,Columns,Lines where Relevant Passages or Relevant Figures Appear

 ALL REFERENCES CONSIDERED EXCEPT WHERE LINED THROUGH. /D.P./

INFORMATION DISCLOSURE STATEMENT BY APPLICANT (Not for submission under 37 CFR 1.99)		
	Application Number	12424320
	Filing Date	2009-04-15
	First Named Inventor	ALLES et al.
	Art Unit	3662
	Examiner Name	PHAN, DAO LINDA
	Attorney Docket Number	AND01 082 CONT

	1							

If you wish to add additional U.S. Published Application citation information please click the Add button.

FOREIGN PATENT DOCUMENTS

Examiner Initial*	Cite No	Foreign Document Number[3]	Country Code[2]	Kind Code[4]	Publication Date	Name of Patentee or Applicant of cited Document	Pages,Columns,Lines where Relevant Passages or Relevant Figures Appear	T[5]
	~~1~~	~~06-347520~~	~~JP~~		~~1994-12-22~~	~~NEC Corp.~~		☐

If you wish to add additional Foreign Patent Document citation information please click the Add button

NON-PATENT LITERATURE DOCUMENTS

Examiner Initials*	Cite No	Include name of the author (in CAPITAL LETTERS), title of the article (when appropriate), title of the item (book, magazine, journal, serial, symposium, catalog, etc), date, pages(s), volume-issue number(s), publisher, city and/or country where published.	T[5]
	~~1~~	~~AMIR LEONEM, MATI WAX, "Array Calibration in the Presence of Multipath," IEEE Transactions on Signal Processing,~~ Vol. 48, No. 1, pp.53-59, January 2000	☐
	~~2~~	~~XIN WANG, ZONGXIN WANG and BOB O'DEA, "A TOA-Based Location Algorithm Reducing the Errors Due to Non-~~ Line-of-Sight (NLOS) Propagation," IEEE Trans. Vehicular Technology, Vol. 52, No.1, January 2003, pp.112--116	☐
	~~3~~	~~M. VANDERVEEN, C. PAPADIAS, A. PAULRAJ, "Joint Angle and Delay Estimation (JADE) for Multipath Signals~~ Arriving at an Antenna Array," IEEE Communications Letters, Vol. 1, No.1, January 1997, pp.12-14	☐
	~~4~~	~~R. SCHMIDT, "Multiple Emitter Location and Signal Parameter Estimation," IEEE Transactions on Antennas and~~ Propagation, Vol. AP-34, No. 3, March 1986, pp.276-280	☐
	~~5~~	~~Y. CHEN, M. ZOLTOWSKI, "Joint Angle and Delay Estimation for DS-CDMA with Application to Reduced Dimension~~ Space-Time Rake Receivers," March 1999, pp.2933-2936	☐

 ALL REFERENCES CONSIDERED EXCEPT WHERE LINED THROUGH. /D.P./

INFORMATION DISCLOSURE STATEMENT BY APPLICANT (Not for submission under 37 CFR 1.99)		
	Application Number	12424320
	Filing Date	2009-04-15
	First Named Inventor	ALLES et al.
	Art Unit	3662
	Examiner Name	PHAN, DAO LINDA
	Attorney Docket Number	AND01 082 CONT

	6	~~A.J. PAULRAJ, C.B. PAPADIAS, "Space-Time Processing for Wireless Communications", IEEE Signal Processing~~ Magazine, Vol. 11, November 1997, pp.49-83	☐
	7	~~C.B. PAPADIAS, A.J. PAULRAJ, "Space-Time Signal Processing for Wireless Communications: A Survey",~~ Information Systems Laboratory, Stanford University	☐
	8	~~M. HAARDT, C. BRUNNER, J. NOSSEK, "Joint Estimation of 2-D Arrival Angles, Propagation Delays, and Doppler~~ Frequencies in Wireless Communications," Proc. IEEE Digital Signal Processing Workshop, Volume 1, pages 1-4, Bryce Canyon National Park, Utah, August 1998.	☐
	9	~~MATI WAX, "Position Location from Sensors with Position Uncertainty," IEEE Transactions Aerospace and Electronic~~ Systems, Volume AES-19, No. 5, September 1983, pp.658-662	☐
	10	~~D.J. TORRIERI, "Statistical Theory of Passive Location Systems", IEEE Transactions Aerospace and Electronic~~ Systems, Volume AES-20, No. 2, March 1984, pp.183-198	☐
	11	~~Y.T. CHAN and K.C. HO, "A Simple and Efficient Estimator for Hyperbolic Location", IEEE Transactions Signal~~ Processing, Volume 42, No. 8, August 1994, pp.1905-1915	☐
	12	~~W.H. FOY, "Position-Location Solutions by Taylor-Series Estimation", IEEE Transactions Aerospace and Electronic~~ Systems, Volume AES-12, No. 2, March 1976, pp.187-194	☐
	13	~~R.G. STANSFIELD, "Statistical Theory of DF Fixing", Journal IEE 94, Part III A, October 1947, pp.762-770~~	☐
	14	~~M.P. WYLIE and J. HOLTZMAN, "The Non-Line-of-Sight Problem in Mobile Location Estimation", Process IEEE 5th~~ International Conference on Universal Personal Communications, Vol. 2, October 1996, pp.827-831	☐
	15	~~L.CONG and W. ZHUANG, "Non-Line-of-Sight Error Mitigation in TDOA Mobile Location", Process IEEE Global~~ Telecommunications Conference, Volume 1, September 2001, pp.680-684	☐
	16	~~P.C. CHEN, "A Non-Line-of-Sight Error Mitigation Algorithm in Location Estimation", Process IEEE Conference on~~ Wireless Communications Networking, Volume 1, 1999, pp.316-320	☐

 ALL REFERENCES CONSIDERED EXCEPT WHERE LINED THROUGH. /D.P./

INFORMATION DISCLOSURE STATEMENT BY APPLICANT (Not for submission under 37 CFR 1.99)	Application Number	12424320
	Filing Date	2009-04-15
	First Named Inventor	ALLES et al.
	Art Unit	3662
	Examiner Name	PHAN, DAO LINDA
	Attorney Docket Number	AND01 082 CONT

	17	~~N.J. THOMAS, D.G.M. CRUICKSHANK and D.I. LAURENSON, "Performance of a TDOA-AOA Hybrid Mobile Location System"~~, 3G Mobile Communication Technologies, Conference Publication No. 477, March 2001, pp.216-220	☐
	18	~~J. CAFFERY, JR., and G. STUBER, "Subscriber Location in CDMA Cellular Networks," IEEE Transactions on~~ Vehicular Technology, Volume 47, No. 2, May 1998, pp.406-416	☐
	~~19~~	~~J. CAFFERY, JR., "A New Approach to the Geometry of TOA Location," IEEE, VTC 2000, pp.1943-1949~~	☐
	20	~~M.SILVENTOINEN and T. RANTALAINEN, "Mobile Station Emergency Locating in GSM", Process IEEE International~~ Conference, Personal Wireless Communications, Volume 1, 1996, pp.232–238.	☐

If you wish to add additional non-patent literature document citation information please click the Add button

EXAMINER SIGNATURE

Examiner Signature	/Dao Phan/	Date Considered	03/23/2012

*EXAMINER: Initial if reference considered, whether or not citation is in conformance with MPEP 609. Draw line through a citation if not in conformance and not considered. Include copy of this form with next communication to applicant.

[1] See Kind Codes of USPTO Patent Documents at www.USPTO.GOV or MPEP 901.04. [2] Enter office that issued the document, by the two-letter code (WIPO Standard ST.3). [3] For Japanese patent documents, the indication of the year of the reign of the Emperor must precede the serial number of the patent document. [4] Kind of document by the appropriate symbols as indicated on the document under WIPO Standard ST.16 if possible. [5] Applicant is to place a check mark here if English language translation is attached.

 ALL REFERENCES CONSIDERED EXCEPT WHERE LINED THROUGH. /D.P./

PTO/SB/08a (05-07)
Approved for use through 09/30/2007. OMB 0651-0031
U.S. Patent and Trademark Office; U.S. DEPARTMENT OF COMMERCE
Under the Paperwork Reduction Act of 1995, no persons are required to respond to a collection of information unless it contains a valid OMB control number.

INFORMATION DISCLOSURE STATEMENT BY APPLICANT

(Not for submission under 37 CFR 1.99)

Application Number	12424320
Filing Date	2009-04-15
First Named Inventor	ALLES et al.
Art Unit	3662
Examiner Name	PHAN, DAO LINDA
Attorney Docket Number	AND01 082 CONT

U.S.PATENTS

Examiner Initial*	Cite No	Patent Number	Kind Code[1]	Issue Date	Name of Patentee or Applicant of cited Document	Pages,Columns,Lines where Relevant Passages or Relevant Figures Appear
	1	6014102	A	2000-01-11	Mitzlaff et al.	
	2	3659085	A	1972-04-25	POTTER BASIL E et al.	
	3	3150372	A	1964-09-22	JR. EDWARD J. GROTH	

If you wish to add additional U.S. Patent citation information please click the Add button.

U.S.PATENT APPLICATION PUBLICATIONS

Examiner Initial*	Cite No	Publication Number	Kind Code[1]	Publication Date	Name of Patentee or Applicant of cited Document	Pages,Columns,Lines where Relevant Passages or Relevant Figures Appear
	1					

If you wish to add additional U.S. Published Application citation information please click the Add button.

FOREIGN PATENT DOCUMENTS

Examiner Initial*	Cite No	Foreign Document Number[3]	Country Code[2] i	Kind Code[4]	Publication Date	Name of Patentee or Applicant of cited Document	Pages,Columns,Lines where Relevant Passages or Relevant Figures Appear	T[5]
	1							☐

 148 ALL REFERENCES CONSIDERED EXCEPT WHERE LINED THROUGH. /D.P./

INFORMATION DISCLOSURE STATEMENT BY APPLICANT (Not for submission under 37 CFR 1.99)		
	Application Number	12424320
	Filing Date	2009-04-15
	First Named Inventor	ALLES et al.
	Art Unit	3662
	Examiner Name	PHAN, DAO LINDA
	Attorney Docket Number	AND01 082 CONT

If you wish to add additional Foreign Patent Document citation information please click the Add button

NON-PATENT LITERATURE DOCUMENTS

Examiner Initials*	Cite No	Include name of the author (in CAPITAL LETTERS), title of the article (when appropriate), title of the item (book, magazine, journal, serial, symposium, catalog, etc), date, pages(s), volume-issue number(s), publisher, city and/or country where published.	T[5]
	1	~~Y. ZHAO, "Standardization of Mobile Phone Positioning for 3G Systems," IEEE Communications Magazine, July 2002,~~ pp.108-116.	☐
	2	~~G. DRANE, M. MAONAUGHTAN, and G. SCOTT, "Positioning GSM Telephones," IEEE Communications Magazine,~~ April 1998, pp.46-54, 59.	☐
	3	~~J. CAFFERY, JR., and G. STUBER, "Overview of Radiolocation in CDMA Cellular Systems," IEEE Communications~~ Magazine, April 1998, pp.38-45.	☐
	4	~~T. RAPPAPORT, J.H. REED and B.D. WOERNER, "Position Location Using Wireless Communications on Highways~~ of the Future," IEEE Communications Magazine, October 1996, pp.33-41.	☐
	5	~~I. ZISKIND and M. WAX, "Maximum Likelihood Localization of Multiple Sources by Alternating Projection," IEEE~~ Transactions on Acoustics, Speech, and Signal Porcessing, Volume 36, No. 10, pp.1553-1560, October 1988.	☐
	6	~~G.W.K. COLMAN, "A Comparison of the Accuracy of TDOA and TOA Location Algorithms with Equivalent Receiver~~ Geometry," Defence R&D Canada Technical Memorandum (DREO TM 2001-063), October 2001, pp.1-53	☐
	7	~~L. MAILAENDER, "On the Geolocation Bounds for Round-Trip Time-of-Arrival and All Non-Line-of-Sight Channels",~~ EURASIP Journal on Advances in Signal Processing, Volume 2008, pp.1-10	☐
	8	~~N. AGARWAL, L. CHAUDRAN-WADI, and V. APTE, "Capacity Analysis of the GSM Short Message Service",~~ Indian Institute of Technology Bombay, www.cse.iitb.ac.in/~varsha/allpapers/wireless/ncc03cam.pdf, 2004, pp.1-5	☐
	9	~~J.D. BARD, and F.M. HAM, "Time Difference of Arrival Dilution of Precision and Applications," IEEE Transactions on~~ Signal Processing, Volume 47, No. 2, pp.521-523, February 1999.	☐

 ALL REFERENCES CONSIDERED EXCEPT WHERE LINED THROUGH. /D.P./

INFORMATION DISCLOSURE STATEMENT BY APPLICANT (Not for submission under 37 CFR 1.99)	Application Number	12424320
	Filing Date	2009-04-15
	First Named Inventor	ALLES et al.
	Art Unit	3662
	Examiner Name	PHAN, DAO LINDA
	Attorney Docket Number	AND01 082 CONT

	10	~~K.C. HO, and W. XU, "An Accurate Algebraic Solution for Moving Source Location Using TDOA and FDOA~~ Measurements", IEEE Transactions on Signal Processing, Volume 52, No. 9, September 2004, pp.2453-2463	☐
	11	~~C.H. KNAPP and G.C. CARTER, "The Generalized Correlation Method for Estimation of Time Delay," IEEE~~ Transactions on Acoustics, Speech, and Signal Processing, Volume ASSP-24, No. 4, August 1976, pp.320-327	☐
	12	~~M. RAHNEMA, "Overview of the GSM System and Protocol Architecture," IEEE Communications Magazine, April~~ 1993, pp.92-100	☐
	13	~~S. STEIN, "Algorithms for Ambiguity Function Processing," IEEE Transactions on Acoustics, Speech, and Signal~~ Processing, Volume ASSP-29, No. 3, June 1981, pp.588-599	☐
	14	~~M. VANDERVEEN, C.B. PAPADIAS, and A. PAULRAJ, "Joint Angle and Delay Estimation (JADE) for Multipath~~ Signals Arriving at an Antenna Array", IEEE Communications Letters, Volume 1, No. 1, January 1997, pp.12-14	☐
	15	~~M. WAX and I. ZISKIND, "On Unique Localization of Multiple Sources by Passive Sensor Arrays," IEEE Transactions~~ on Acoustics, Speech, and Signal Processing, Volume 37, No. 7, July 1989, pp.996-1000	☐
	16	~~B. YANG, "Projection Approximation Subspace Tracking," IEEE Transactions on Signal Processing, Volume 43, No. 1,~~ January 1995, pp.95-107	☐

If you wish to add additional non-patent literature document citation information please click the Add button

EXAMINER SIGNATURE

Examiner Signature	/Dao Phan/	Date Considered	03/23/2012

*EXAMINER: Initial if reference considered, whether or not citation is in conformance with MPEP 609. Draw line through a citation if not in conformance and not considered. Include copy of this form with next communication to applicant.

[1] See Kind Codes of USPTO Patent Documents at www.USPTO.GOV or MPEP 901.04. [2] Enter office that issued the document, by the two-letter code (WIPO Standard ST.3). [3] For Japanese patent documents, the indication of the year of the reign of the Emperor must precede the serial number of the patent document. [4] Kind of document by the appropriate symbols as indicated on the document under WIPO Standard ST.16 if possible. [5] Applicant is to place a check mark here if English language translation is attached.

 ALL REFERENCES CONSIDERED EXCEPT WHERE LINED THROUGH. /D.P./

Search Notes	Application/Control No.	Applicant(s)/Patent Under Reexamination
	12424320	ALLES ET AL.
	Examiner	**Art Unit**
	DAO PHAN	3662

SEARCHED

Class	Subclass	Date	Examiner
342	451, 457, 463-465	3/23/12	dp
455	456.1, 456.6, 457		

SEARCH NOTES

Search Notes	Date	Examiner
East text (See attached)	3/23/12	dp

INTERFERENCE SEARCH

Class	Subclass	Date	Examiner

U.S. Patent and Trademark Office

Application Number	Application/Control No.	Applicant(s)/Patent under Reexamination	
	12/424,320	ALLES ET AL.	

Document Code - DISQ	Internal Document – DO NOT MAIL

TERMINAL DISCLAIMER	☒ APPROVED	☐ DISAPPROVED
Date Filed : 01/24/12	This patent is subject to a Terminal Disclaimer	

Approved/Disapproved by:

Lawana Hixon

U.S. Patent and Trademark Office

IN THE UNITED STATES PATENT AND TRADEMARK OFFICE

In re the Patent Application of Martin Alles, et al.

Serial No.:	12/424,320	Art Unit:	3662
Filed:	April 15, 2009	Examiner:	Dao Linda Phan

Title: METHOD TO MODIFY CALIBRATION DATA USED TO LOCATE A MOBILE UNIT

RESPONSE

Commissioner for Patents
P.O. Box 1450
Alexandria, Virginia 22313-1450

Sir:

Responsive to the Office Action mailed October 24, 2011, Applicant submits the following remarks.

Applicant's **Remarks** begin on Page 2 of this paper.

Remarks

Claims 1-52 are pending with entry of this paper.

Claims 1-52 stand rejected.

Applicant acknowledges the withdrawal of the rejection of the pending claims under 35 U.S.C. §102(b) over each of Krumm, Stilp, and Schantz.

Non-statutory double patenting rejections

The pending claims stand rejected on the grounds of non-statutory obviousness-type double patenting over U.S. Patent No. 7,561,104 (the "'104 Patent"). Applicant does not understand the basis for the rejection, namely, "claims 1-52 are generic to all that is recited in claims 1-14 of U.S. Patent No. 7,561,104. In other words, claims 1-14 of U.S. Patent No. 7,561,104 fully encompass the subject matter of claims 1-52 of the present application and therefore anticipate claims 1-52." *See* Action at paragraph 3.

Without addressing the substance of the statement, the Office's first statement that the pending "claims 1-52 are generic to all that is recited in claims 1-14" of the '104 Patent is an admission that the pending claims are broader than those in the parent patent; thus, Applicant does not understand how an allegedly narrower set of claims can, *without any support proffered by the Office*, serve as the basis for a non-statutory obviousness-type double patenting rejection.

Further, the '104 Patent is the parent patent of the pending application, and Applicant properly claimed the priority benefit of the '104 Patent, the priority being acknowleged by the Office. Thus, it follows that the Office's second statement, that the '104 Patent "fully encompass [sic] the subject matter of claims 1-52 of the present application and therefore anticipate claims 1-52" is flatly incorrect and improper.

Clearly, the Office's non-statutory obviousness-type double patenting rejection is improper on its face; however, Applicant has filed a terminal disclaimer concurrently herewith solely to further prosecution in this matter. As such, reconsideration and withdrawal of the non-statutory obviousness-type double patenting rejection of the pending claims are respectfully requested.

Conclusion

Applicant respectfully submits that the claims are in condition for allowance and a notice to this effect is respectfully requested.

The Office is requested and hereby authorized to charge any required extension-of-time fees against Deposit Account Number 04-1679 to Duane Morris LLP.

If any point remains that is deemed best resolved through a telephonic conversation, the Office is hereby requested to contact the undersigned directly.

Respectfully submitted,

/Mark C. Comtois

Mark C. Comtois Reg. No. 46,285
Ryan T. Hardee Reg. No. 57,515

DUANE MORRIS LLP
505 9th Street N.W., Suite 1000
Washington, D.C. 20004
Telephone: (202) 776-7800
Telecopier: (202) 776-7801
Dated: January 24, 2012

PTO/SB/26 (08-11)
Approved for use through 07/31/2012. OMB 0651-0031
U.S. Patent and Trademark Office; U.S. DEPARTMENT OF COMMERCE
Under the Paperwork Reduction Act of 1995, no persons are required to respond to a collection of information unless it displays a valid OMB control number.

TERMINAL DISCLAIMER TO OBVIATE A DOUBLE PATENTING REJECTION OVER A "PRIOR" PATENT	Docket Number (Optional) AND01 082 CONT

In re Application of: Martin Alles, et al.

Application No.: 12/424,320

Filed: April 15, 2009

For: METHOD TO MODIFY CALIBRATION DATA USED TO LOCATE A MOBILE UNIT

The owner*, Andrew LLC, of 100 percent interest in the instant application hereby disclaims, except as provided below, the terminal part of the statutory term of any patent granted on the instant application which would extend beyond the expiration date of the full statutory term of **prior patent** No. 7,561,104 as the term of said **prior patent** is presently shortened by any terminal disclaimer. The owner hereby agrees that any patent so granted on the instant application shall be enforceable only for and during such period that it and the **prior patent** are commonly owned. This agreement runs with any patent granted on the instant application and is binding upon the grantee, its successors or assigns.

In making the above disclaimer, the owner does not disclaim the terminal part of the term of any patent granted on the instant application that would extend to the expiration date of the full statutory term of the **prior patent**, "as the term of said **prior patent** is presently shortened by any terminal disclaimer," in the event that said **prior patent** later:

expires for failure to pay a maintenance fee;
is held unenforceable;
is found invalid by a court of competent jurisdiction;
is statutorily disclaimed in whole or terminally disclaimed under 37 CFR 1.321;
has all claims canceled by a reexamination certificate;
is reissued; or
is in any manner terminated prior to the expiration of its full statutory term as presently shortened by any terminal disclaimer.

Check either box 1 or 2 below, if appropriate.

1. ☐ For submissions on behalf of a business/organization (e.g., corporation, partnership, university, government agency, etc.), the undersigned is empowered to act on behalf of the business/organization.

I hereby declare that all statements made herein of my own knowledge are true and that all statements made on information and belief are believed to be true; and further that these statements were made with the knowledge that willful false statements and the like so made are punishable by fine or imprisonment, or both, under Section 1001 of Title 18 of the United States Code and that such willful false statements may jeopardize the validity of the application or any patent issued thereon.

2. ☑ The undersigned is an attorney or agent of record. Reg. No.: 46,285

/Mark C. Comtois/ — Signature
January 24, 2012 — Date

Mark C. Comtois — Typed or printed name

202-776-7800 — Telephone Number

☑ Terminal disclaimer fee under 37 CFR 1.20(d) included.

WARNING: Information on this form may become public. Credit card information should not be included on this form. Provide credit card information and authorization on PTO-2038.

*Statement under 37 CFR 3.73(b) is required if terminal disclaimer is signed by the assignee (owner). Form PTO/SB/96 may be used for making this certification. See MPEP § 324.

This collection of information is required by 37 CFR 1.321. The information is required to obtain or retain a benefit by the public which is to file (and by the USPTO to process) an application. Confidentiality is governed by 35 U.S.C. 122 and 37 CFR 1.11 and 1.14. This collection is estimated to take 12 minutes to complete, including gathering, preparing, and submitting the completed application form to the USPTO. Time will vary depending upon the individual case. Any comments on the amount of time you require to complete this form and/or suggestions for reducing this burden, should be sent to the Chief Information Officer, U.S. Patent and Trademark Office, U.S. Department of Commerce, P.O. Box 1450, Alexandria, VA 22313-1450. DO NOT SEND FEES OR COMPLETED FORMS TO THIS ADDRESS. **SEND TO: Commissioner for Patents, P.O. Box 1450, Alexandria, VA 22313-1450.**

If you need assistance in completing the form, call 1-800-PTO-9199 and select option 2.

Electronic Patent Application Fee Transmittal

Application Number:	12424320
Filing Date:	15-Apr-2009
Title of Invention:	METHOD TO MODIFY CALIBRATION DATA USED TO LOCATE A MOBILE UNIT
First Named Inventor/Applicant Name:	Martin Alles
Filer:	Mark Charles Comtois/laureen ponder
Attorney Docket Number:	AND01 082 CONT

Filed as Large Entity

Utility under 35 USC 111(a) Filing Fees

Description	Fee Code	Quantity	Amount	Sub-Total in USD($)
Basic Filing:				
Pages:				
Claims:				
Miscellaneous-Filing:				
Petition:				
Patent-Appeals-and-Interference:				
Post-Allowance-and-Post-Issuance:				
Extension-of-Time:				

Description	Fee Code	Quantity	Amount	Sub-Total in USD($)
Miscellaneous:				
Statutory or terminal disclaimer	1814	1	160	160
		Total in USD ($)		**160**

Electronic Acknowledgement Receipt

EFS ID:	11906074
Application Number:	12424320
International Application Number:	
Confirmation Number:	1334
Title of Invention:	METHOD TO MODIFY CALIBRATION DATA USED TO LOCATE A MOBILE UNIT
First Named Inventor/Applicant Name:	Martin Alles
Customer Number:	79172
Filer:	Mark Charles Comtois/laureen ponder
Filer Authorized By:	Mark Charles Comtois
Attorney Docket Number:	AND01 082 CONT
Receipt Date:	24-JAN-2012
Filing Date:	15-APR-2009
Time Stamp:	13:50:26
Application Type:	Utility under 35 USC 111(a)

Payment information:

Submitted with Payment	yes
Payment Type	Deposit Account
Payment was successfully received in RAM	$160
RAM confirmation Number	13011
Deposit Account	041679
Authorized User	

The Director of the USPTO is hereby authorized to charge indicated fees and credit any overpayment as follows:

Charge any Additional Fees required under 37 C.F.R. Section 1.21 (Miscellaneous fees and charges)

File Listing:

Document Number	Document Description	File Name	File Size(Bytes)/ Message Digest	Multi Part /.zip	Pages (if appl.)
1		AND01082CONTJanRspTD.pdf	517272 6cd07d8afda1117e477abd56e5210be3a6ed12bc	yes	4

Multipart Description/PDF files in .zip description		
Document Description	**Start**	**End**
Amendment/Req. Reconsideration-After Non-Final Reject	1	3
Terminal Disclaimer Filed	4	4

Warnings:

Information:

2	Fee Worksheet (SB06)	fee-info.pdf	30168 6c12ee5d59d69003c746f1a98c0ebd5d5564a8a6	no	2

Warnings:

Information:

Total Files Size (in bytes):	547440

This Acknowledgement Receipt evidences receipt on the noted date by the USPTO of the indicated documents, characterized by the applicant, and including page counts, where applicable. It serves as evidence of receipt similar to a Post Card, as described in MPEP 503.

New Applications Under 35 U.S.C. 111
If a new application is being filed and the application includes the necessary components for a filing date (see 37 CFR 1.53(b)-(d) and MPEP 506), a Filing Receipt (37 CFR 1.54) will be issued in due course and the date shown on this Acknowledgement Receipt will establish the filing date of the application.

National Stage of an International Application under 35 U.S.C. 371
If a timely submission to enter the national stage of an international application is compliant with the conditions of 35 U.S.C. 371 and other applicable requirements a Form PCT/DO/EO/903 indicating acceptance of the application as a national stage submission under 35 U.S.C. 371 will be issued in addition to the Filing Receipt, in due course.

New International Application Filed with the USPTO as a Receiving Office
If a new international application is being filed and the international application includes the necessary components for an international filing date (see PCT Article 11 and MPEP 1810), a Notification of the International Application Number and of the International Filing Date (Form PCT/RO/105) will be issued in due course, subject to prescriptions concerning national security, and the date shown on this Acknowledgement Receipt will establish the international filing date of the application.

UNITED STATES PATENT AND TRADEMARK OFFICE

UNITED STATES DEPARTMENT OF COMMERCE
United States Patent and Trademark Office
Address: COMMISSIONER FOR PATENTS
P.O. Box 1450
Alexandria, Virginia 22313-1450
www.uspto.gov

APPLICATION NO.	FILING DATE	FIRST NAMED INVENTOR	ATTORNEY DOCKET NO.	CONFIRMATION NO.
12/424,320	04/15/2009	Martin Alles	AND01 082 CONT	1334

79172 7590 10/24/2011
Duane Morris LLP
505 9th Street, N.W.
Suite 1000
Washington, DC 20004

EXAMINER
PHAN, DAO LINDA

ART UNIT	PAPER NUMBER
3662	

MAIL DATE	DELIVERY MODE
10/24/2011	PAPER

Please find below and/or attached an Office communication concerning this application or proceeding.

The time period for reply, if any, is set in the attached communication.

PTOL-90A (Rev. 04/07)

Office Action Summary	Application No.	Applicant(s)	
	12/424,320	ALLES ET AL.	
	Examiner	Art Unit	
	Dao Phan	3662	

-- The MAILING DATE of this communication appears on the cover sheet with the correspondence address --

Period for Reply

A SHORTENED STATUTORY PERIOD FOR REPLY IS SET TO EXPIRE 3 MONTH(S) OR THIRTY (30) DAYS, WHICHEVER IS LONGER, FROM THE MAILING DATE OF THIS COMMUNICATION.

- Extensions of time may be available under the provisions of 37 CFR 1.136(a). In no event, however, may a reply be timely filed after SIX (6) MONTHS from the mailing date of this communication.
- If NO period for reply is specified above, the maximum statutory period will apply and will expire SIX (6) MONTHS from the mailing date of this communication.
- Failure to reply within the set or extended period for reply will, by statute, cause the application to become ABANDONED (35 U.S.C. § 133). Any reply received by the Office later than three months after the mailing date of this communication, even if timely filed, may reduce any earned patent term adjustment. See 37 CFR 1.704(b).

Status

1)☒ Responsive to communication(s) filed on *19 July 2011*.

2a)☐ This action is **FINAL**. 2b)☒ This action is non-final.

3)☐ An election was made by the applicant in response to a restriction requirement set forth during the interview on _____; the restriction requirement and election have been incorporated into this action.

4)☐ Since this application is in condition for allowance except for formal matters, prosecution as to the merits is closed in accordance with the practice under *Ex parte Quayle*, 1935 C.D. 11, 453 O.G. 213.

Disposition of Claims

5)☒ Claim(s) *1-52* is/are pending in the application.

5a) Of the above claim(s) _____ is/are withdrawn from consideration.

6)☐ Claim(s) _____ is/are allowed.

7)☒ Claim(s) *1-52* is/are rejected.

8)☐ Claim(s) _____ is/are objected to.

9)☐ Claim(s) _____ are subject to restriction and/or election requirement.

Application Papers

10)☐ The specification is objected to by the Examiner.

11)☐ The drawing(s) filed on _____ is/are: a)☐ accepted or b)☐ objected to by the Examiner.

Applicant may not request that any objection to the drawing(s) be held in abeyance. See 37 CFR 1.85(a).

Replacement drawing sheet(s) including the correction is required if the drawing(s) is objected to. See 37 CFR 1.121(d).

12)☐ The oath or declaration is objected to by the Examiner. Note the attached Office Action or form PTO-152.

Priority under 35 U.S.C. § 119

13)☐ Acknowledgment is made of a claim for foreign priority under 35 U.S.C. § 119(a)-(d) or (f).

a)☐ All b)☐ Some * c)☐ None of:

1.☐ Certified copies of the priority documents have been received.

2.☐ Certified copies of the priority documents have been received in Application No. _____.

3.☐ Copies of the certified copies of the priority documents have been received in this National Stage application from the International Bureau (PCT Rule 17.2(a)).

* See the attached detailed Office action for a list of the certified copies not received.

Attachment(s)

1) ☒ Notice of References Cited (PTO-892)
2) ☐ Notice of Draftsperson's Patent Drawing Review (PTO-948)
3) ☐ Information Disclosure Statement(s) (PTO/SB/08) Paper No(s)/Mail Date _____.
4) ☐ Interview Summary (PTO-413) Paper No(s)/Mail Date. _____ .
5) ☐ Notice of Informal Patent Application
6) ☐ Other: _____.

1. Copies of FOREIGN PATENT DOCUMENTS and NON-PATENT LITERATURE DOCUMENTS listed on PTO-1449 filed on 7/15/2009 and 11/22/2010 were not received by the office.

2. The nonstatutory double patenting rejection is based on a judicially created doctrine grounded in public policy (a policy reflected in the statute) so as to prevent the unjustified or improper timewise extension of the "right to exclude" granted by a patent and to prevent possible harassment by multiple assignees. A nonstatutory obviousness-type double patenting rejection is appropriate where the conflicting claims are not identical, but at least one examined application claim is not patentably distinct from the reference claim(s) because the examined application claim is either anticipated by, or would have been obvious over, the reference claim(s). See, e.g., *In re Berg*, 140 F.3d 1428, 46 USPQ2d 1226 (Fed. Cir. 1998); *In re Goodman*, 11 F.3d 1046, 29 USPQ2d 2010 (Fed. Cir. 1993); *In re Longi*, 759 F.2d 887, 225 USPQ 645 (Fed. Cir. 1985); *In re Van Ornum*, 686 F.2d 937, 214 USPQ 761 (CCPA 1982); *In re Vogel*, 422 F.2d 438, 164 USPQ 619 (CCPA 1970); and *In re Thorington*, 418 F.2d 528, 163 USPQ 644 (CCPA 1969).

A timely filed terminal disclaimer in compliance with 37 CFR 1.321(c) or 1.321(d) may be used to overcome an actual or provisional rejection based on a nonstatutory double patenting ground provided the conflicting application or patent either is shown to be commonly owned with this application, or claims an invention made as a result of activities undertaken within the scope of a joint research agreement.

Effective January 1, 1994, a registered attorney or agent of record may sign a terminal disclaimer. A terminal disclaimer signed by the assignee must fully comply with 37 CFR 3.73(b).

3. Claims 1-52 are rejected on the ground of nonstatutory obviousness-type double patenting as being unpatentable over claims 1-14 of U.S. Patent No. 7,561,104. Although the conflicting claims are not identical, they are not patentably distinct from each other because claims 1-52 are generic to all that is recited in claims 1-14 of U.S. Patent No. 7,561,104. In other words, claims 1-14 of U.S. Patent No. 7,561,104 fully encompass the subject matter of claims 1-52 of the present application and therefore anticipate claims 1-52.

4. Any inquiry concerning this communication or earlier communications from the examiner should be directed to Dao Phan whose telephone number is (571)272-6976. The examiner can normally be reached on M-F 9:00-5:30.

If attempts to reach the examiner by telephone are unsuccessful, the examiner's supervisor, Thomas Tarcza can be reached on (571)272-6979. The fax phone number for the organization where this application or proceeding is assigned is 571-273-8300.

Information regarding the status of an application may be obtained from the Patent Application Information Retrieval (PAIR) system. Status information for published applications may be obtained from either Private PAIR or Public PAIR. Status information for unpublished applications is available through Private PAIR only. For more information about the PAIR system, see http://pair-direct.uspto.gov. Should you have questions on access to the Private PAIR system, contact the Electronic Business Center (EBC) at 866-217-9197 (toll-free). If you would like assistance from a USPTO Customer Service Representative or access to the automated information system, call 800-786-9199 (IN USA OR CANADA) or 571-272-1000.

/Dao Phan/
Primary Examiner, Art Unit 3662

Notice of References Cited	Application/Control No. 12/424,320	Applicant(s)/Patent Under Reexamination ALLES ET AL.	
	Examiner Dao Phan	Art Unit 3662	Page 1 of 1

U.S. PATENT DOCUMENTS

*		Document Number Country Code-Number-Kind Code	Date MM-YYYY	Name	Classification
*	A	US-7,561,104	07-2009	Alles et al.	342/451
	B	US-			
	C	US-			
	D	US-			
	E	US-			
	F	US-			
	G	US-			
	H	US-			
	I	US-			
	J	US-			
	K	US-			
	L	US-			
	M	US-			

FOREIGN PATENT DOCUMENTS

*		Document Number Country Code-Number-Kind Code	Date MM-YYYY	Country	Name	Classification
	N					
	O					
	P					
	Q					
	R					
	S					
	T					

NON-PATENT DOCUMENTS

*		Include as applicable: Author, Title Date, Publisher, Edition or Volume, Pertinent Pages)
	U	
	V	
	W	
	X	

*A copy of this reference is not being furnished with this Office action. (See MPEP § 707.05(a).)
Dates in MM-YYYY format are publication dates. Classifications may be US or foreign.

IN THE UNITED STATES PATENT AND TRADEMARK OFFICE

In re the Patent Application of Martin Alles, et al.

Serial No.:	12/424,320	Art Unit:	3662
Filed:	April 15, 2009	Examiner:	Dao Linda Phan

Title: METHOD TO MODIFY CALIBRATION DATA USED TO LOCATE A MOBILE UNIT

RESPONSE

Commissioner for Patents
P.O. Box 1450
Alexandria, Virginia 22313-1450

Sir:

Responsive to the Office Action mailed June 17, 2011, Applicant submits the following remarks.

Applicant's **Remarks** begin on Page 2 of this paper.

Remarks

Claims 1-52 are pending with entry of this amendment.

Claims 1-52 stand rejected.

Section 102(b) Rejections

Claims 1-52 stand improperly rejected under 35 U.S.C. §102(b) as being unpatentable over each of Krumm, Stilp, and Schantz. Applicant respectfully submits the rejections are premised upon a misreading of what each reference fairly discloses and respectfully requests withdrawal of the rejection.

1. Quality of the Office Action

In the Action, the Office provided a terse, two-paragraph omnibus rejection of all fifty-two pending claims premised upon brief conclusions on what Krumm allegedly teaches. Further, the Office failed to provide support for each and every element of Claims 1-52 in its rejection premised upon Krumm.

The Office also provided a second omnibus rejection (which appears to be a carbon copy of the Krumm rejection) of all fifty-two pending claims premised upon brief conclusions on what Stilp allegedly teaches. Again, the Office failed to provide support for each and every element of Claims 1-52 in its rejection premised upon Stilp.

The Office further provided a third omnibus rejection (which also appears to be a carbon copy of the Krumm rejection) of all fifty-two pending claims premised upon brief conclusions on what Schantz allegedly teaches. Again, the Office failed to provide support for each and every element of Claims 1-52 in its rejection premised upon Schantz.

For example, no portion of any of the references (Krumm, Stilp, or Schantz) were provided by the Office to show support for any of the elements of Claims 2-40 or 42-52. Applicant does not understand how the Office can issue and/or maintain any rejection under Section 102(b) with no support in the cited reference nor any support provided by the Office. This is expressly contrary to the guidance delineated by MPEP § 2131 stating that "[a] claim is anticipated only if each and every element as set forth in the claim is found, either expressly or inherently described, in a single prior art reference." See MPEP § 2131. Applicant respectfully requests a proper examination of the claims of record and/or an in person interview with the Examiner and his or her supervisor.

In a good faith effort to further prosecution of the subject application, however, Applicant will address the deficiencies of the cited references.

1. Background

The claimed subject matter is generally directed to a method and system of modifying calibration data used to geo-locate a mobile station. For example, when a mobile station is located indoors, the signal strength of signals received and/or transmitted by the mobile station have the tendency to be lower than the strength of the signals received by a mobile station located outdoors. As a result of these lower signal strengths, geo-location efforts which rely on signal strengths may result in unsatisfactory location accuracy. Modifying pre-existing calibration data obtained outdoors may provide a way to simulate indoor calibration data characteristics.

More specifically, the claimed subject matter is directed to a method and system for determining the location of a mobile station. A database of previously-gathered calibration data for a predetermined region in a wireless network may be provided and observed network measurement data collected, e.g., from network measurement reports (NMRs). This observed network measurement data may be modified and compared with the database of calibration data to determine the location of the mobile station.

2. Krumm, Stilp and Schantz

Each of the cited references of record, however, are directed to entirely different inventions.

For example, Krumm is directed to an RF-based location tracking system. *See* [0002] of Krumm. With respect to Figure 6 of Krumm identified by the Office, the reference teaches a method of calibrating the location tracking system; however, this calibration process has no relation to the claimed subject matter. Krumm teaches a user having a portable computer with a periodic transmitter that moves about a predetermined space. The periodic transmissions of the portable computer are received by node locations in the space. These node locations represent predetermined locations where a person or object might be at any particular time. Once the portable computer is at the node location, calibration data for the node is recorded. This is performed for all node locations in the predetermined space. *See* [0087]-[0090] of Krumm.

None of the sections cited by the Office in Krumm, nor the entirety of the reference, teach or disclose collecting observed network measurement data (e.g., from NMRs), modifying

the observed network measurement data and comparing the modified network measurement data with a database of calibration data to determine the location of a mobile station. As the Office is aware, such network measurement data from NMRs may be measurement data or calibration data obtained at one or several points in a network used to represent network characteristics in the network. See [0027] of Applicant's published specification. Thus, a mere disclosure of an unrelated calibration process in Krumm cannot meet the Office's burden of proof that each of the elements of independent Claims 1, 15, 29, and 41 are anticipated by Krumm (much less any of the elements of the dependent claims thereon). For this reason at least, Krumm cannot be utilized in a rejection of Claims 1-52 under Section 102 or 103, and Applicant respectfully requests reconsideration and withdrawal of the rejection premised upon Krumm.

Regarding Stilp, this reference is directed to a method and apparatus for timing calibrations in a wireless location system (WLS). Stilp discloses providing calibration transmitters in a communications network having signal characteristics that match those of a target wireless device. These transmitters transmit periodic registration signals and/or page response signals which are used to calibrate the timing of a signal collection system (SCS). *See* Figures 2G-2J and paragraphs [0114]-[0115]. More specifically, the times of arrival of the periodic transmissions are determined and any delays in the digital signal processing components of the SCS may be reduced and/or calibrated. *See* [0116]-[0121] of Stilp.

None of the sections cited by the Office in Stilp, nor the entirety of the reference, teach or disclose collecting observed network measurement data (e.g., from NMRs), modifying the observed network measurement data and comparing the modified network measurement data with a database of calibration data to determine the location of a mobile station. A simple disclosure of a calibrating for timing delays in Stilp's wireless location system cannot meet the Office's burden of proof that each of the elements of independent Claims 1, 15, 29, and 41 are anticipated by Stilp (much less any of the elements of the dependent claims thereon). For this reason at least, Stilp cannot be utilized in a rejection of Claims 1-52 under Section 102 or 103, and Applicant respectfully requests reconsideration and withdrawal of the rejection premised upon Stilp.

Regarding Schantz, this reference is directed to a method and apparatus for determining the location in conjunction with a calibration process using beacon signals. *See* [0013]-[0014] of Schantz. Schantz's calibration process includes a reference transmitter in a network that

periodically transmits a beacon signal. Characteristics of this signal are received and detected. Based upon a difference between two detected characteristics of the received signal, calibration data may be stored and utilized to correct subsequent location determinations. *See* [0196]-[0200] and [0205]-[0213].

None of the sections cited by the Office in Schantz, nor the entirety of the reference, teach or disclose collecting observed network measurement data (e.g., from NMRs), modifying the observed network measurement data and comparing the modified network measurement data with a database of calibration data to determine the location of a mobile station. Rather, Schantz provides a simple disclosure of an external calibration method employing a transmitting calibration beacon. Such a disclosure cannot meet the Office's burden of proof that each of the elements of independent Claims 1, 15, 29, and 41 are anticipated by Schantz (much less any of the elements of the dependent claims thereon). For this reason at least, Schantz cannot be utilized in a rejection of Claims 1-52 under Section 102 or 103, and Applicant respectfully requests reconsideration and withdrawal of the rejection premised upon Schantz.

For at least the several reasons discussed above, the rejections premised upon Krumm, Stilp, and/or Schantz are improper and should be withdrawn. Applicant thus respectfully submits the rejections of independent Claims 1, 15, 29, and 41 and those claims dependent thereon are improper and respectfully requests reconsideration and withdrawal of such rejections.

Conclusion

Applicant respectfully submits that the claims are in condition for allowance and a notice to this effect is respectfully requested.

The Office is requested and hereby authorized to charge any required extension-of-time fees against Deposit Account Number 04-1679 to Duane Morris LLP.

If any point remains that is deemed best resolved through a telephonic conversation, the Office is hereby requested to contact the undersigned directly.

Respectfully submitted,

/Mark C. Comtois

Mark C. Comtois Reg. No. 46,285
Ryan T. Hardee Reg. No. 57,515

DUANE MORRIS LLP
505 9th Street N.W., Suite 1000
Washington, D.C. 20004
Telephone: (202) 776-7800
Telecopier: (202) 776-7801
Dated: July 19, 2011

Electronic Acknowledgement Receipt

EFS ID:	10546810
Application Number:	12424320
International Application Number:	
Confirmation Number:	1334
Title of Invention:	METHOD TO MODIFY CALIBRATION DATA USED TO LOCATE A MOBILE UNIT
First Named Inventor/Applicant Name:	Martin Alles
Customer Number:	79172
Filer:	Mark Charles Comtois/Sharon Dennis
Filer Authorized By:	Mark Charles Comtois
Attorney Docket Number:	AND01 082 CONT
Receipt Date:	19-JUL-2011
Filing Date:	15-APR-2009
Time Stamp:	09:26:07
Application Type:	Utility under 35 USC 111(a)

Payment information:

Submitted with Payment	no

File Listing:

Document Number	Document Description	File Name	File Size(Bytes)/ Message Digest	Multi Part /.zip	Pages (if appl.)
1	Amendment/Req. Reconsideration-After Non-Final Reject	AND01082CONTResp.pdf	514832 35fc065e2e91e9e7c0d4fed8655722a62f638623	no	6

Warnings:

Information:

Total Files Size (in bytes):	514832

This Acknowledgement Receipt evidences receipt on the noted date by the USPTO of the indicated documents, characterized by the applicant, and including page counts, where applicable. It serves as evidence of receipt similar to a Post Card, as described in MPEP 503.

New Applications Under 35 U.S.C. 111
If a new application is being filed and the application includes the necessary components for a filing date (see 37 CFR 1.53(b)-(d) and MPEP 506), a Filing Receipt (37 CFR 1.54) will be issued in due course and the date shown on this Acknowledgement Receipt will establish the filing date of the application.

National Stage of an International Application under 35 U.S.C. 371
If a timely submission to enter the national stage of an international application is compliant with the conditions of 35 U.S.C. 371 and other applicable requirements a Form PCT/DO/EO/903 indicating acceptance of the application as a national stage submission under 35 U.S.C. 371 will be issued in addition to the Filing Receipt, in due course.

New International Application Filed with the USPTO as a Receiving Office
If a new international application is being filed and the international application includes the necessary components for an international filing date (see PCT Article 11 and MPEP 1810), a Notification of the International Application Number and of the International Filing Date (Form PCT/RO/105) will be issued in due course, subject to prescriptions concerning national security, and the date shown on this Acknowledgement Receipt will establish the international filing date of the application.

UNITED STATES PATENT AND TRADEMARK OFFICE

UNITED STATES DEPARTMENT OF COMMERCE
United States Patent and Trademark Office
Address: COMMISSIONER FOR PATENTS
P.O. Box 1450
Alexandria, Virginia 22313-1450
www.uspto.gov

APPLICATION NO.	FILING DATE	FIRST NAMED INVENTOR	ATTORNEY DOCKET NO.	CONFIRMATION NO.
12/424,320	04/15/2009	Martin Alles	AND01 082 CONT	1334

79172 7590 06/17/2011
Duane Morris LLP
505 9th Street, N.W.
Suite 1000
Washington, DC 20004

EXAMINER
PHAN, DAO LINDA

ART UNIT	PAPER NUMBER
3662	

MAIL DATE	DELIVERY MODE
06/17/2011	PAPER

Please find below and/or attached an Office communication concerning this application or proceeding.

The time period for reply, if any, is set in the attached communication.

PTOL-90A (Rev. 04/07)

Office Action Summary	Application No.	Applicant(s)	
	12/424,320	ALLES ET AL.	
	Examiner	Art Unit	
	Dao Phan	3662	

-- The MAILING DATE of this communication appears on the cover sheet with the correspondence address --

Period for Reply

A SHORTENED STATUTORY PERIOD FOR REPLY IS SET TO EXPIRE 3 MONTH(S) OR THIRTY (30) DAYS, WHICHEVER IS LONGER, FROM THE MAILING DATE OF THIS COMMUNICATION.

- Extensions of time may be available under the provisions of 37 CFR 1.136(a). In no event, however, may a reply be timely filed after SIX (6) MONTHS from the mailing date of this communication.
- If NO period for reply is specified above, the maximum statutory period will apply and will expire SIX (6) MONTHS from the mailing date of this communication.
- Failure to reply within the set or extended period for reply will, by statute, cause the application to become ABANDONED (35 U.S.C. § 133). Any reply received by the Office later than three months after the mailing date of this communication, even if timely filed, may reduce any earned patent term adjustment. See 37 CFR 1.704(b).

Status

1)☒ Responsive to communication(s) filed on *15 April 2009*.

2a)☐ This action is **FINAL**. 2b)☒ This action is non-final.

3)☐ Since this application is in condition for allowance except for formal matters, prosecution as to the merits is closed in accordance with the practice under *Ex parte Quayle*, 1935 C.D. 11, 453 O.G. 213.

Disposition of Claims

4)☒ Claim(s) *1-52* is/are pending in the application.

4a) Of the above claim(s) _____ is/are withdrawn from consideration.

5)☐ Claim(s) _____ is/are allowed.

6)☒ Claim(s) *1-52* is/are rejected.

7)☐ Claim(s) _____ is/are objected to.

8)☐ Claim(s) _____ are subject to restriction and/or election requirement.

Application Papers

9)☐ The specification is objected to by the Examiner.

10)☒ The drawing(s) filed on *15 April 2009* is/are: a)☒ accepted or b)☐ objected to by the Examiner.

Applicant may not request that any objection to the drawing(s) be held in abeyance. See 37 CFR 1.85(a).

Replacement drawing sheet(s) including the correction is required if the drawing(s) is objected to. See 37 CFR 1.121(d).

11)☐ The oath or declaration is objected to by the Examiner. Note the attached Office Action or form PTO-152.

Priority under 35 U.S.C. § 119

12)☐ Acknowledgment is made of a claim for foreign priority under 35 U.S.C. § 119(a)-(d) or (f).

a)☐ All b)☐ Some * c)☐ None of:

1.☐ Certified copies of the priority documents have been received.

2.☐ Certified copies of the priority documents have been received in Application No. _____.

3.☐ Copies of the certified copies of the priority documents have been received in this National Stage application from the International Bureau (PCT Rule 17.2(a)).

* See the attached detailed Office action for a list of the certified copies not received.

Attachment(s)

1) ☐ Notice of References Cited (PTO-892)

2) ☐ Notice of Draftsperson's Patent Drawing Review (PTO-948)

3) ☒ Information Disclosure Statement(s) (PTO/SB/08) Paper No(s)/Mail Date _____.

4) ☐ Interview Summary (PTO-413) Paper No(s)/Mail Date. _____ .

5) ☐ Notice of Informal Patent Application

6) ☐ Other: _____.

1. FOREIGN PATENT DOCUMENTS and NON-PATENT LITERATURE DOCUMENTS cited on PTO-1449 filed on 7/15/2009 and 11/22/2010 were not received by the office.

2. The following is a quotation of the appropriate paragraphs of 35 U.S.C. 102 that form the basis for the rejections under this section made in this Office action:

> A person shall be entitled to a patent unless –
>
> (b) the invention was patented or described in a printed publication in this or a foreign country or in public use or on sale in this country, more than one year prior to the date of application for patent in the United States.

3. Claims 1-52 are rejected under 35 U.S.C. 102(b) as being anticipated by Krumm et al (US 2005/0093745) or Stilp (US 2002/0172223) or Schantz et al (Pat. No. 7,298,314).

Krumm et al teach a system and a method for determining a location of a mobile station including providing (fig. 6) a database of previously-gathered calibration data for a predetermined region in a wireless network; collecting (300; 202; paragraph 0019+) observed network measurement data; modifying 204; 302 the observed network measurement data; and comparing (304; fig. 6 & 8) the modified network measurement data with the database of calibration data to thereby determine the location of a mobile station.

With regard to claims 41-52, Krumm et al teach a method for determining a location of a mobile station including providing (fig. 6) a database of previously-gathered calibration data for a predetermined region in a wireless network; collecting (300; 202; paragraph 0019+) observed network measurement data from each of a plurality of transmitters including a signal characteristic from each one of plural transmitters;

determining (par. 0095) an average value for select ones of the signal characteristics; modifying (204; 302) the observed network measurement data using the average value; and comparing (304; fig. 6 & 8) the modified network measurement data with the database of calibration data to thereby determine the location of the mobile station.

Stilp teaches a system and a method for determining a location of a mobile station including providing (paragraph 0121) a database of previously-gathered calibration data for a predetermined region in a wireless network; collecting 10-2A observed network measurement data; modifying (10-3; fig. 2D) the observed network measurement data; and comparing (WLS; paragraph 0121 ; fig. 4) the modified network measurement data with the database of calibration data to thereby determine the location of the mobile station.

With regard to claims 41-52, Stilp teaches a method for determining a location of a mobile station including providing (paragraph 0121) a database of previously-gathered calibration data for a predetermined region in a wireless network; collecting 10-2A observed network measurement data from each of a plurality of transmitters including a signal characteristic from each one of plural transmitters; determining (par. 0018, 0117) an average value for select ones of the signal characteristics; modifying (10-3; fig. 2D) the observed network measurement data using the average value; and comparing (WLS; paragraph 0121 ; fig. 4) the modified network measurement data with the database of calibration data to thereby determine the location of the mobile station.

Schantz et al teach a system and a method for determining a location of a mobile station including providing (col 3, lines 1-3) a database of previously-gathered

calibration data for a predetermined region in a wireless network; collecting (2306; fig. 2) observed network measurement data; modifying 2310 the observed network measurement data; and comparing (2102, 2316, 2318; abstract; col 3, lines 4+) the modified network measurement data with the database of calibration data to thereby determine the location of a mobile station.

With regard to claims 41-52, Schantz et al teach a method for determining a location of a mobile station including providing (col 3, lines 1-3) a database of previously-gathered calibration data for a predetermined region in a wireless network; collecting (2306; fig. 2) observed network measurement data from each of a plurality of transmitters including a signal characteristic from each one of plural transmitters; determining (2310, 2404, 2406; fig. 24) an average value for select ones of the signal characteristics; modifying 2310, 2312, 2316 the observed network measurement data using the average value; and comparing (2102, 2316, 2318; abstract; col 3, lines 4+) the modified network measurement data with the database of calibration data to thereby determine the location of the mobile station.

4. Any inquiry concerning this communication or earlier communications from the examiner should be directed to Dao Phan whose telephone number is (571)272-6976. The examiner can normally be reached on M-F 9:00-5:30.

If attempts to reach the examiner by telephone are unsuccessful, the examiner's supervisor, Thomas Tarcza can be reached on (571)272-6979. The fax phone number for the organization where this application or proceeding is assigned is 571-273-8300.

Information regarding the status of an application may be obtained from the Patent Application Information Retrieval (PAIR) system. Status information for published applications may be obtained from either Private PAIR or Public PAIR. Status information for unpublished applications is available through Private PAIR only. For more information about the PAIR system, see http://pair-direct.uspto.gov. Should you have questions on access to the Private PAIR system, contact the Electronic Business Center (EBC) at 866-217-9197 (toll-free). If you would like assistance from a USPTO Customer Service Representative or access to the automated information system, call 800-786-9199 (IN USA OR CANADA) or 571-272-1000.

/Dao Phan/
Primary Examiner, Art Unit 3662

PTO/SB/08a (01-10)
Approved for use through 07/31/2012. OMB 0651-0031
U.S. Patent and Trademark Office; U.S. DEPARTMENT OF COMMERCE
Under the Paperwork Reduction Act of 1995, no persons are required to respond to a collection of information unless it contains a valid OMB control number.

INFORMATION DISCLOSURE STATEMENT BY APPLICANT

(Not for submission under 37 CFR 1.99)

Application Number	12424320
Filing Date	2009-04-15
First Named Inventor	ALLES et al.
Art Unit	3662
Examiner Name	PHAN, DAO LINDA
Attorney Docket Number	AND01 082 CONT

U.S.PATENTS

Examiner Initial*	Cite No	Patent Number	Kind Code[1]	Issue Date	Name of Patentee or Applicant of cited Document	Pages,Columns,Lines where Relevant Passages or Relevant Figures Appear
	1					

If you wish to add additional U.S. Patent citation information please click the Add button.

U.S.PATENT APPLICATION PUBLICATIONS

Examiner Initial*	Cite No	Publication Number	Kind Code[1]	Publication Date	Name of Patentee or Applicant of cited Document	Pages,Columns,Lines where Relevant Passages or Relevant Figures Appear
	1	20050176442	A1	2005-08-11	Ju et al.	

If you wish to add additional U.S. Published Application citation information please click the Add button.

FOREIGN PATENT DOCUMENTS

Examiner Initial*	Cite No	Foreign Document Number[3]	Country Code[2] i	Kind Code[4]	Publication Date	Name of Patentee or Applicant of cited Document	Pages,Columns,Lines where Relevant Passages or Relevant Figures Appear	T[5]
	1							☐

If you wish to add additional Foreign Patent Document citation information please click the Add button

NON-PATENT LITERATURE DOCUMENTS

Examiner Initials*	Cite No	Include name of the author (in CAPITAL LETTERS), title of the article (when appropriate), title of the item (book, magazine, journal, serial, symposium, catalog, etc), date, pages(s), volume-issue number(s), publisher, city and/or country where published.	T[5]

 181 ALL REFERENCES CONSIDERED EXCEPT WHERE LINED THROUGH. /D.P./

INFORMATION DISCLOSURE STATEMENT BY APPLICANT (Not for submission under 37 CFR 1.99)	Application Number	12424320
	Filing Date	2009-04-15
	First Named Inventor	ALLES et al.
	Art Unit	3662
	Examiner Name	PHAN, DAO LINDA
	Attorney Docket Number	AND01 082 CONT

	1		☐

If you wish to add additional non-patent literature document citation information please click the Add button

EXAMINER SIGNATURE

Examiner Signature	/Dao Phan/	Date Considered	06/13/2011

*EXAMINER: Initial if reference considered, whether or not citation is in conformance with MPEP 609. Draw line through a citation if not in conformance and not considered. Include copy of this form with next communication to applicant.

[1] See Kind Codes of USPTO Patent Documents at www.USPTO.GOV or MPEP 901.04. [2] Enter office that issued the document, by the two-letter code (WIPO Standard ST.3). [3] For Japanese patent documents, the indication of the year of the reign of the Emperor must precede the serial number of the patent document. [4] Kind of document by the appropriate symbols as indicated on the document under WIPO Standard ST.16 if possible. [5] Applicant is to place a check mark here if English language translation is attached.

 ALL REFERENCES CONSIDERED EXCEPT WHERE LINED THROUGH. /D.P./

PTO/SB/08a (01-10)
Approved for use through 07/31/2012. OMB 0651-0031
U.S. Patent and Trademark Office; U.S. DEPARTMENT OF COMMERCE

Under the Paperwork Reduction Act of 1995, no persons are required to respond to a collection of information unless it contains a valid OMB control number.

INFORMATION DISCLOSURE STATEMENT BY APPLICANT

(Not for submission under 37 CFR 1.99)

Application Number	12424320
Filing Date	2009-04-15
First Named Inventor	ALLES et al.
Art Unit	3662
Examiner Name	PHAN, DAO LINDA
Attorney Docket Number	AND01 082 CONT

U.S.PATENTS

Examiner Initial*	Cite No	Patent Number	Kind Code[1]	Issue Date	Name of Patentee or Applicant of cited Document	Pages,Columns,Lines where Relevant Passages or Relevant Figures Appear
	1	5960341	A	1999-09-28	LeBlanc et al.	

If you wish to add additional U.S. Patent citation information please click the Add button.

U.S.PATENT APPLICATION PUBLICATIONS

Examiner Initial*	Cite No	Publication Number	Kind Code[1]	Publication Date	Name of Patentee or Applicant of cited Document	Pages,Columns,Lines where Relevant Passages or Relevant Figures Appear
	1	20050078033	A1	2005-04-14	Tamaki et al.	
	2	20050040968	A1	2005-02-24	Damarla et al.	
	3	20050266855	A1	2005-12-01	Zeng et al.	

If you wish to add additional U.S. Published Application citation information please click the Add button.

FOREIGN PATENT DOCUMENTS

Examiner Initial*	Cite No	Foreign Document Number[3]	Country Code[2] i	Kind Code[4]	Publication Date	Name of Patentee or Applicant of cited Document	Pages,Columns,Lines where Relevant Passages or Relevant Figures Appear	T[5]
	1	1471688	EP	A2	2004-10-27	Microsoft Corp.		☐

183 ALL REFERENCES CONSIDERED EXCEPT WHERE LINED THROUGH. /D.P./

INFORMATION DISCLOSURE STATEMENT BY APPLICANT (Not for submission under 37 CFR 1.99)	Application Number	12424320
	Filing Date	2009-04-15
	First Named Inventor	ALLES et al.
	Art Unit	3662
	Examiner Name	PHAN, DAO LINDA
	Attorney Docket Number	AND01 082 CONT

	2	02/082832	WO	A2	2002-10-17	AT&T Wireless		☐

If you wish to add additional Foreign Patent Document citation information please click the Add button

NON-PATENT LITERATURE DOCUMENTS

Examiner Initials*	Cite No	Include name of the author (in CAPITAL LETTERS), title of the article (when appropriate), title of the item (book, magazine, journal, serial, symposium, catalog, etc), date, pages(s), volume-issue number(s), publisher, city and/or country where published.	T[5]
	1		☐

If you wish to add additional non-patent literature document citation information please click the Add button

EXAMINER SIGNATURE

Examiner Signature	/Dao Phan/	Date Considered	06/13/2011

*EXAMINER: Initial if reference considered, whether or not citation is in conformance with MPEP 609. Draw line through a citation if not in conformance and not considered. Include copy of this form with next communication to applicant.

[1] See Kind Codes of USPTO Patent Documents at www.USPTO.GOV or MPEP 901.04. [2] Enter office that issued the document, by the two-letter code (WIPO Standard ST.3). [3] For Japanese patent documents, the indication of the year of the reign of the Emperor must precede the serial number of the patent document. [4] Kind of document by the appropriate symbols as indicated on the document under WIPO Standard ST.16 if possible. [5] Applicant is to place a check mark here if English language translation is attached.

 ALL REFERENCES CONSIDERED EXCEPT WHERE LINED THROUGH. /D.P./

PTO/SB/08a (05-07)
Approved for use through 09/30/2007. OMB 0651-0031
U.S. Patent and Trademark Office; U.S. DEPARTMENT OF COMMERCE
Under the Paperwork Reduction Act of 1995, no persons are required to respond to a collection of information unless it contains a valid OMB control number.

INFORMATION DISCLOSURE STATEMENT BY APPLICANT

(Not for submission under 37 CFR 1.99)

Application Number	12424320
Filing Date	2009-04-15
First Named Inventor	ALLES et al.
Art Unit	3662
Examiner Name	PHAN, DAO LINDA
Attorney Docket Number	AND01 082 CONT

U.S.PATENTS

Examiner Initial*	Cite No	Patent Number	Kind Code[1]	Issue Date	Name of Patentee or Applicant of cited Document	Pages,Columns,Lines where Relevant Passages or Relevant Figures Appear
	1					

If you wish to add additional U.S. Patent citation information please click the Add button.

U.S.PATENT APPLICATION PUBLICATIONS

Examiner Initial*	Cite No	Publication Number	Kind Code[1]	Publication Date	Name of Patentee or Applicant of cited Document	Pages,Columns,Lines where Relevant Passages or Relevant Figures Appear
	1	20080161015	A1	2008-01-02	Maloney, et al.	
	2	20020172223	A1	2002-11-21	Stilp, et al.	
	3	20080132247	A1	2008-06-05	Anderson, et al.	
	4	20080132244	A1	2008-06-05	Anderson, et al.	
	5	20080158059	A1	2008-07-03	Bull, et al.	

 ALL REFERENCES CONSIDERED EXCEPT WHERE LINED THROUGH. /D.P./

INFORMATION DISCLOSURE STATEMENT BY APPLICANT (Not for submission under 37 CFR 1.99)		
	Application Number	12424320
	Filing Date	2009-04-15
	First Named Inventor	ALLES et al.
	Art Unit	3662
	Examiner Name	PHAN, DAO LINDA
	Attorney Docket Number	AND01 082 CONT

	6	20080261614	A1	2008-10-23	Mia, et al.	
	7	20080261613	A1	2008-10-23	Anderson, et al.	
	8	20080261612	A1	2008-10-23	Mia, et al.	
	9	20080261611	A1	2008-10-23	Mia, et al.	
	10	20080137524	A1	2008-06-12	Anderson, et al.	
	11	20080248811	A1	2008-10-09	Maloney, et al.	
	12	20070111746	A1	2007-05-17	Anderson, et al.	
	13	20070155489	A1	2007-07-05	Beckley, et al.	
	14	20090005061	A1	2009-01-01	Ward, et al.	
	15	20070155401	A1	2007-07-05	Ward, et al.	
	16	20060030333	A1	2006-02-09	Ward, et al.	

 ALL REFERENCES CONSIDERED EXCEPT WHERE LINED THROUGH. /D.P./

INFORMATION DISCLOSURE STATEMENT BY APPLICANT (Not for submission under 37 CFR 1.99)		
	Application Number	12424320
	Filing Date	2009-04-15
	First Named Inventor	ALLES et al.
	Art Unit	3662
	Examiner Name	PHAN, DAO LINDA
	Attorney Docket Number	AND01 082 CONT

	17	20030064734	A1	2003-04-03	Stilp, et al.	
	18	20060003775	A1	2006-01-05	Bull, et al.	

If you wish to add additional U.S. Published Application citation information please click the Add button.

FOREIGN PATENT DOCUMENTS

Examiner Initial*	Cite No	Foreign Document Number[3]	Country Code[2] i	Kind Code[4]	Publication Date	Name of Patentee or Applicant of cited Document	Pages,Columns,Lines where Relevant Passages or Relevant Figures Appear	T[5]
	1							☐

If you wish to add additional Foreign Patent Document citation information please click the Add button

NON-PATENT LITERATURE DOCUMENTS

Examiner Initials*	Cite No	Include name of the author (in CAPITAL LETTERS), title of the article (when appropriate), title of the item (book, magazine, journal, serial, symposium, catalog, etc), date, pages(s), volume-issue number(s), publisher, city and/or country where published.	T[5]
	1		☐

If you wish to add additional non-patent literature document citation information please click the Add button

EXAMINER SIGNATURE

Examiner Signature	/Dao Phan/	Date Considered	06/13/2011

*EXAMINER: Initial if reference considered, whether or not citation is in conformance with MPEP 609. Draw line through a citation if not in conformance and not considered. Include copy of this form with next communication to applicant.

[1] See Kind Codes of USPTO Patent Documents at www.USPTO.GOV or MPEP 901.04. [2] Enter office that issued the document, by the two-letter code (WIPO Standard ST.3). [3] For Japanese patent documents, the indication of the year of the reign of the Emperor must precede the serial number of the patent document. [4] Kind of document by the appropriate symbols as indicated on the document under WIPO Standard ST.16 if possible. [5] Applicant is to place a check mark here if English language translation is attached.

 ALL REFERENCES CONSIDERED EXCEPT WHERE LINED THROUGH. /D.P./

PTO/SB/08a (05-07)
Approved for use through 09/30/2007. OMB 0651-0031
U.S. Patent and Trademark Office; U.S. DEPARTMENT OF COMMERCE
Under the Paperwork Reduction Act of 1995, no persons are required to respond to a collection of information unless it contains a valid OMB control number.

INFORMATION DISCLOSURE STATEMENT BY APPLICANT

(Not for submission under 37 CFR 1.99)

Application Number	12424320
Filing Date	2009-04-15
First Named Inventor	ALLES et al.
Art Unit	3662
Examiner Name	PHAN, DAO LINDA
Attorney Docket Number	AND01 082 CONT

U.S.PATENTS

Examiner Initial*	Cite No	Patent Number	Kind Code[1]	Issue Date	Name of Patentee or Applicant of cited Document	Pages,Columns,Lines where Relevant Passages or Relevant Figures Appear
	1	6920329	B2	2005-07-19	Kennedy, Jr. et al.	
	2	6987979	B2	2006-01-17	Carlsson	
	3	6859172	B2	2005-02-22	Powers et al.	
	4	6201803	B1	2001-03-13	Munday et al.	
	5	6097959	A	2000-08-01	Yost	
	6	5987329	A	1999-11-16	Yost	
	7	5952969	A	1999-09-14	Hagerman et al.	
	8	5423067	A	1995-06-06	Manabe	

 ALL REFERENCES CONSIDERED EXCEPT WHERE LINED THROUGH. /D.P./

INFORMATION DISCLOSURE STATEMENT BY APPLICANT (Not for submission under 37 CFR 1.99)		
	Application Number	12424320
	Filing Date	2009-04-15
	First Named Inventor	ALLES et al.
	Art Unit	3662
	Examiner Name	PHAN, DAO LINDA
	Attorney Docket Number	AND01 082 CONT

	9	5372144	A	1994-12-13	Mortier et al.	

If you wish to add additional U.S. Patent citation information please click the Add button.

U.S.PATENT APPLICATION PUBLICATIONS

Examiner Initial*	Cite No	Publication Number	Kind Code[1]	Publication Date	Name of Patentee or Applicant of cited Document	Pages,Columns,Lines where Relevant Passages or Relevant Figures Appear
	1	20040132466	A1	2004-07-08	Kennedy, Jr. et al.	
	2	20040218664	A1	2004-11-04	Kennedy, Jr. et al.	
	3	20040252752	A1	2004-12-16	Kennedy, Jr. et al.	
	4	20040043775	A1	2004-03-04	Kennedy, Jr. et al.	
	5	20030190919	A1	2003-10-09	Niemenmaa	
	6	20050192026	A1	2005-09-01	Carlson, et al.	
	7	20050164712	A1	2005-07-28	Kennedy, Jr. et al.	
	8	20050136945	A1	2005-06-23	Kennedy, Jr. et al.	

 ALL REFERENCES CONSIDERED EXCEPT WHERE LINED THROUGH. /D.P./

INFORMATION DISCLOSURE STATEMENT BY APPLICANT (Not for submission under 37 CFR 1.99)	Application Number	12424320
	Filing Date	2009-04-15
	First Named Inventor	ALLES et al.
	Art Unit	3662
	Examiner Name	PHAN, DAO LINDA
	Attorney Docket Number	AND01 082 CONT

	9	20050058182	A1	2005-03-17	Kennedy, Jr. et al.	
	10	20060003695	A1	2006-01-05	Kennedy, Jr. et al.	
	11	20060116130	A1	2006-06-01	Kennedy, Jr. et al.	
	12	20060125695	A1	2006-06-15	Kennedy, Jr. et al.	
	13	20060141998	A1	2006-06-29	Kennedy, Jr. et al.	
	14	20060154607	A1	2006-07-13	Kennedy, Jr. et al.	
	15	20060240836	A1	2006-10-26	Kennedy, Jr. et al.	
	16	20070202885	A1	2007-08-30	Kennedy, Jr. et al.	
	17	20070087689	A1	2007-04-19	Kennedy, Jr. et al.	
	18	20040203921	A1	2004-10-14	Bromhead, et al.	
	19	20070155401	A1	2007-07-05	Ward, et al.	

 ALL REFERENCES CONSIDERED EXCEPT WHERE LINED THROUGH. /D.P./

INFORMATION DISCLOSURE STATEMENT BY APPLICANT (Not for submission under 37 CFR 1.99)	Application Number	12424320
	Filing Date	2009-04-15
	First Named Inventor	ALLES et al.
	Art Unit	3662
	Examiner Name	PHAN, DAO LINDA
	Attorney Docket Number	AND01 082 CONT

	20	20030139188	A1	2003-07-24	Chen, et al.	
	21	20030203738	A1	2003-10-30	Brown, et al.	

If you wish to add additional U.S. Published Application citation information please click the Add button.

FOREIGN PATENT DOCUMENTS

Examiner Initial*	Cite No	Foreign Document Number[3]	Country Code[2] i	Kind Code[4]	Publication Date	Name of Patentee or Applicant of cited Document	Pages,Columns,Lines where Relevant Passages or Relevant Figures Appear	T[5]
	1							☐

If you wish to add additional Foreign Patent Document citation information please click the Add button

NON-PATENT LITERATURE DOCUMENTS

Examiner Initials*	Cite No	Include name of the author (in CAPITAL LETTERS), title of the article (when appropriate), title of the item (book, magazine, journal, serial, symposium, catalog, etc), date, pages(s), volume-issue number(s), publisher, city and/or country where published.	T[5]
	1		☐

If you wish to add additional non-patent literature document citation information please click the Add button

EXAMINER SIGNATURE

Examiner Signature	/Dao Phan/	Date Considered	06/13/2011

*EXAMINER: Initial if reference considered, whether or not citation is in conformance with MPEP 609. Draw line through a citation if not in conformance and not considered. Include copy of this form with next communication to applicant.

[1] See Kind Codes of USPTO Patent Documents at www.USPTO.GOV or MPEP 901.04. [2] Enter office that issued the document, by the two-letter code (WIPO Standard ST.3). [3] For Japanese patent documents, the indication of the year of the reign of the Emperor must precede the serial number of the patent document. [4] Kind of document by the appropriate symbols as indicated on the document under WIPO Standard ST.16 if possible. [5] Applicant is to place a check mark here if English language translation is attached.

 ALL REFERENCES CONSIDERED EXCEPT WHERE LINED THROUGH. /D.P./

PTO/SB/08a (01-10)
Approved for use through 07/31/2012. OMB 0651-0031
U.S. Patent and Trademark Office; U.S. DEPARTMENT OF COMMERCE
Under the Paperwork Reduction Act of 1995, no persons are required to respond to a collection of information unless it contains a valid OMB control number.

INFORMATION DISCLOSURE STATEMENT BY APPLICANT

(Not for submission under 37 CFR 1.99)

Application Number	12424320
Filing Date	2009-04-15
First Named Inventor	ALLES et al.
Art Unit	3662
Examiner Name	PHAN, DAO LINDA
Attorney Docket Number	AND01 082 CONT

U.S.PATENTS

Examiner Initial*	Cite No	Patent Number	Kind Code[1]	Issue Date	Name of Patentee or Applicant of cited Document	Pages,Columns,Lines where Relevant Passages or Relevant Figures Appear
	1					

If you wish to add additional U.S. Patent citation information please click the Add button.

U.S.PATENT APPLICATION PUBLICATIONS

Examiner Initial*	Cite No	Publication Number	Kind Code[1]	Publication Date	Name of Patentee or Applicant of cited Document	Pages,Columns,Lines where Relevant Passages or Relevant Figures Appear
	1	20050176442	A1	2005-08-11	Ju et al.	

If you wish to add additional U.S. Published Application citation information please click the Add button.

FOREIGN PATENT DOCUMENTS

Examiner Initial*	Cite No	Foreign Document Number[3]	Country Code[2] i	Kind Code[4]	Publication Date	Name of Patentee or Applicant of cited Document	Pages,Columns,Lines where Relevant Passages or Relevant Figures Appear	T[5]
	1							☐

If you wish to add additional Foreign Patent Document citation information please click the Add button

NON-PATENT LITERATURE DOCUMENTS

Examiner Initials*	Cite No	Include name of the author (in CAPITAL LETTERS), title of the article (when appropriate), title of the item (book, magazine, journal, serial, symposium, catalog, etc), date, pages(s), volume-issue number(s), publisher, city and/or country where published.	T[5]

INFORMATION DISCLOSURE STATEMENT BY APPLICANT (Not for submission under 37 CFR 1.99)	Application Number	12424320
	Filing Date	2009-04-15
	First Named Inventor	ALLES et al.
	Art Unit	3662
	Examiner Name	PHAN, DAO LINDA
	Attorney Docket Number	AND01 082 CONT

	1		☐

If you wish to add additional non-patent literature document citation information please click the Add button

EXAMINER SIGNATURE

Examiner Signature		Date Considered	

*EXAMINER: Initial if reference considered, whether or not citation is in conformance with MPEP 609. Draw line through a citation if not in conformance and not considered. Include copy of this form with next communication to applicant.

[1] See Kind Codes of USPTO Patent Documents at www.USPTO.GOV or MPEP 901.04. [2] Enter office that issued the document, by the two-letter code (WIPO Standard ST.3). [3] For Japanese patent documents, the indication of the year of the reign of the Emperor must precede the serial number of the patent document. [4] Kind of document by the appropriate symbols as indicated on the document under WIPO Standard ST.16 if possible. [5] Applicant is to place a check mark here if English language translation is attached.

INFORMATION DISCLOSURE STATEMENT BY APPLICANT (Not for submission under 37 CFR 1.99)		
	Application Number	12424320
	Filing Date	2009-04-15
	First Named Inventor	ALLES et al.
	Art Unit	3662
	Examiner Name	PHAN, DAO LINDA
	Attorney Docket Number	AND01 082 CONT

CERTIFICATION STATEMENT

Please see 37 CFR 1.97 and 1.98 to make the appropriate selection(s):

☒ That each item of information contained in the information disclosure statement was first cited in any communication from a foreign patent office in a counterpart foreign application not more than three months prior to the filing of the information disclosure statement. See 37 CFR 1.97(e)(1).

OR

☐ That no item of information contained in the information disclosure statement was cited in a communication from a foreign patent office in a counterpart foreign application, and, to the knowledge of the person signing the certification after making reasonable inquiry, no item of information contained in the information disclosure statement was known to any individual designated in 37 CFR 1.56(c) more than three months prior to the filing of the information disclosure statement. See 37 CFR 1.97(e)(2).

☐ See attached certification statement.

☐ The fee set forth in 37 CFR 1.17 (p) has been submitted herewith.

☐ A certification statement is not submitted herewith.

SIGNATURE

A signature of the applicant or representative is required in accordance with CFR 1.33, 10.18. Please see CFR 1.4(d) for the form of the signature.

Signature	/Mark C. Comtois/	Date (YYYY-MM-DD)	2011-02-22
Name/Print	Mark C. Comtois	Registration Number	46,285

This collection of information is required by 37 CFR 1.97 and 1.98. The information is required to obtain or retain a benefit by the public which is to file (and by the USPTO to process) an application. Confidentiality is governed by 35 U.S.C. 122 and 37 CFR 1.14. This collection is estimated to take 1 hour to complete, including gathering, preparing and submitting the completed application form to the USPTO. Time will vary depending upon the individual case. Any comments on the amount of time you require to complete this form and/or suggestions for reducing this burden, should be sent to the Chief Information Officer, U.S. Patent and Trademark Office, U.S. Department of Commerce, P.O. Box 1450, Alexandria, VA 22313-1450. DO NOT SEND FEES OR COMPLETED FORMS TO THIS ADDRESS. **SEND TO: Commissioner for Patents, P.O. Box 1450, Alexandria, VA 22313-1450.**

Electronic Acknowledgement Receipt

EFS ID:	9495534
Application Number:	12424320
International Application Number:	
Confirmation Number:	1334
Title of Invention:	METHOD TO MODIFY CALIBRATION DATA USED TO LOCATE A MOBILE UNIT
First Named Inventor/Applicant Name:	Martin Alles
Customer Number:	79172
Filer:	Mark Charles Comtois/Nicola Kinney
Filer Authorized By:	Mark Charles Comtois
Attorney Docket Number:	AND01 082 CONT
Receipt Date:	22-FEB-2011
Filing Date:	15-APR-2009
Time Stamp:	17:04:12
Application Type:	Utility under 35 USC 111(a)

Payment information:

Submitted with Payment	no

File Listing:

Document Number	Document Description	File Name	File Size(Bytes)/ Message Digest	Multi Part /.zip	Pages (if appl.)
1	Information Disclosure Statement (IDS) Filed (SB/08)	082CONT_IDS.pdf	513487 2f0d8f23040516067056ee0c3d8e980840a5d4e6	no	3

Warnings:

Information:

This is not an USPTO supplied IDS fillable form	
Total Files Size (in bytes):	513487

This Acknowledgement Receipt evidences receipt on the noted date by the USPTO of the indicated documents, characterized by the applicant, and including page counts, where applicable. It serves as evidence of receipt similar to a Post Card, as described in MPEP 503.

New Applications Under 35 U.S.C. 111
If a new application is being filed and the application includes the necessary components for a filing date (see 37 CFR 1.53(b)-(d) and MPEP 506), a Filing Receipt (37 CFR 1.54) will be issued in due course and the date shown on this Acknowledgement Receipt will establish the filing date of the application.

National Stage of an International Application under 35 U.S.C. 371
If a timely submission to enter the national stage of an international application is compliant with the conditions of 35 U.S.C. 371 and other applicable requirements a Form PCT/DO/EO/903 indicating acceptance of the application as a national stage submission under 35 U.S.C. 371 will be issued in addition to the Filing Receipt, in due course.

New International Application Filed with the USPTO as a Receiving Office
If a new international application is being filed and the international application includes the necessary components for an international filing date (see PCT Article 11 and MPEP 1810), a Notification of the International Application Number and of the International Filing Date (Form PCT/RO/105) will be issued in due course, subject to prescriptions concerning national security, and the date shown on this Acknowledgement Receipt will establish the international filing date of the application.

PTO/SB/08a (05-07)
Approved for use through 09/30/2007. OMB 0651-0031
U.S. Patent and Trademark Office; U.S. DEPARTMENT OF COMMERCE
Under the Paperwork Reduction Act of 1995, no persons are required to respond to a collection of information unless it contains a valid OMB control number.

INFORMATION DISCLOSURE STATEMENT BY APPLICANT

(Not for submission under 37 CFR 1.99)

Application Number	12424320
Filing Date	2009-04-15
First Named Inventor	ALLES et al.
Art Unit	3662
Examiner Name	PHAN, DAO LINDA
Attorney Docket Number	AND01 082 CONT

U.S.PATENTS

Examiner Initial*	Cite No	Patent Number	Kind Code[1]	Issue Date	Name of Patentee or Applicant of cited Document	Pages,Columns,Lines where Relevant Passages or Relevant Figures Appear
	1	6952158	B2	2005-10-04	Kennedy, Jr.	
	2	6922170	B2	2005-07-26	Alexander, Jr.	
	3	6871077	B2	2005-03-22	Kennedy, Jr.	
	4	6845240	B2	2005-01-18	Carlson et al.	
	5	6839539		2005-01-04	Durrant, et al.	
	6	6834234	B2	2004-12-21	Scherzinger et al.	
	7	6771969	B1	2004-08-03	Chinoy	
	8	6640106	B2	2003-10-28	Gutowski et al.	

INFORMATION DISCLOSURE STATEMENT BY APPLICANT (Not for submission under 37 CFR 1.99)		
	Application Number	12424320
	Filing Date	2009-04-15
	First Named Inventor	ALLES et al.
	Art Unit	3662
	Examiner Name	PHAN, DAO LINDA
	Attorney Docket Number	AND01 082 CONT

	9	6603761	B1	2003-08-05	Wang	
	10	6571082	B1	2003-05-27	Rahman	
	11	6553322	B1	2003-04-22	Ignagni	
	12	6501955	B1	2002-12-31	Durrant et al.	
	13	6477161	B1	2002-11-05	Hudson	
	14	6470195	B1	2002-10-22	Meyer	
	15	6407703	B1	2002-06-18	Minter et al.	
	16	6311043	B1	2001-10-30	Haardt et al.	
	17	6295455	B1	2001-09-25	Fischer et al.	
	18	6246884	B1	2001-06-12	Karmi et al.	
	19	6233459	B1	2001-05-15	Sullivan et al.	

INFORMATION DISCLOSURE STATEMENT BY APPLICANT (Not for submission under 37 CFR 1.99)		
	Application Number	12424320
	Filing Date	2009-04-15
	First Named Inventor	ALLES et al.
	Art Unit	3662
	Examiner Name	PHAN, DAO LINDA
	Attorney Docket Number	AND01 082 CONT

	20	6212319	B1	2001-04-03	Cayrefourcq	
	21	6201499	B1	2001-03-13	Hawkes et al.	
	22	6191738	B1	2001-02-20	Pfeil et al.	
	23	6188351	B1	2001-02-13	Bloebaum	
	24	6144711	A	2000-11-07	Raleigh et al.	
	25	5973643	A	1999-10-26	Hawkes et al.	
	26					
	27	5920278	A	1999-07-06	Tyler et al.	
	28	5870029	A	1999-02-09	Otto et al.	
	29	5825887	A	1998-10-20	Lennen	
	30	5815538	A	1998-09-29	Grell et al.	

INFORMATION DISCLOSURE STATEMENT BY APPLICANT (Not for submission under 37 CFR 1.99)		
	Application Number	12424320
	Filing Date	2009-04-15
	First Named Inventor	ALLES et al.
	Art Unit	3662
	Examiner Name	PHAN, DAO LINDA
	Attorney Docket Number	AND01 082 CONT

	31	5736964	A	1998-04-07	Ghosh et al.	
	32	5675344	A	1997-10-07	Tong et al.	
	33	5614914	A	1997-03-25	Bolgiano et al.	
	34	5592180	A	1997-01-07	Yokev et al.	
	35	5559864	A	1996-09-24	Kennedy	
	36	5519760	A	1996-05-21	Borkowski et al.	
	37	5515419	A	1996-05-07	Sheffer	
	38	5512908	A	1996-04-30	Herrick	
	39	5508708	A	1996-04-16	Ghosh et al.	
	40	5506864	A	1996-04-09	Schilling	
	41	5506863	A	1996-04-09	Meidan et al.	

INFORMATION DISCLOSURE STATEMENT BY APPLICANT (Not for submission under 37 CFR 1.99)		
	Application Number	12424320
	Filing Date	2009-04-15
	First Named Inventor	ALLES et al.
	Art Unit	3662
	Examiner Name	PHAN, DAO LINDA
	Attorney Docket Number	AND01 082 CONT

	42	5465289	A	1995-11-07	Kennedy	
	43	5404376	A	1995-04-04	Dent	
	44	5365544	A	1994-11-15	Schilling	
	45	5317323	A	1994-05-31	Kennedy et al.	
	46	5218618	A	1993-06-08	Sagey	
	47	5056106	A	1991-10-08	Wang	
	48	4891650	A	1990-01-02	Sheffer	
	49	4845504	A	1989-07-04	Roberts et al.	
	50	4814751	A	1989-03-21	Hawkins	

If you wish to add additional U.S. Patent citation information please click the Add button.

U.S.PATENT APPLICATION PUBLICATIONS

Examiner Initial*	Cite No	Publication Number	Kind Code[1]	Publication Date	Name of Patentee or Applicant of cited Document	Pages,Columns,Lines where Relevant Passages or Relevant Figures Appear

INFORMATION DISCLOSURE STATEMENT BY APPLICANT (Not for submission under 37 CFR 1.99)		
	Application Number	12424320
	Filing Date	2009-04-15
	First Named Inventor	ALLES et al.
	Art Unit	3662
	Examiner Name	PHAN, DAO LINDA
	Attorney Docket Number	AND01 082 CONT

	1							

If you wish to add additional U.S. Published Application citation information please click the Add button.

FOREIGN PATENT DOCUMENTS

Examiner Initial*	Cite No	Foreign Document Number[3]	Country Code[2] i	Kind Code[4]	Publication Date	Name of Patentee or Applicant of cited Document	Pages,Columns,Lines where Relevant Passages or Relevant Figures Appear	T[5]
	1	06-347529	JP		1994-12-22	NEC Corp.		☐

If you wish to add additional Foreign Patent Document citation information please click the Add button

NON-PATENT LITERATURE DOCUMENTS

Examiner Initials*	Cite No	Include name of the author (in CAPITAL LETTERS), title of the article (when appropriate), title of the item (book, magazine, journal, serial, symposium, catalog, etc), date, pages(s), volume-issue number(s), publisher, city and/or country where published.	T[5]
	1	AMIR LESHEM, MATI WAX, "Array Calibration in the Presence of Multipath," IEEE Transactions on Signal Processing, Vol. 48, No. 1, pp.53-59, January 2000	☐
	2	XIN WANG, ZONGXIN WANG and BOB O'DEA, "A TOA-Based Location Algorithm Reducing the Errors Due to Non-Line-of-Sight (NLOS) Propagation," IEEE Trans. Vehicular Technology, Vol. 52, No.1, January 2003, pp.112--116	☐
	3	M. VANDERVEEN, C. PAPADIAS, A. PAULRAJ, "Joint Angle and Delay Estimation (JADE) for Multipath Signals Arriving at an Antenna Array," IEEE Communications Letters, Vol. 1, No.1, January 1997, pp.12-14	☐
	4	R. SCHMIDT, "Multiple Emitter Location and Signal Parameter Estimation," IEEE Transactions on Antennas and Propagation, Vol. AP-34, No. 3, March 1986, pp.276-280	☐
	5	Y. CHEN, M. ZOLTOWSKI, "Joint Angle and Delay Estimation for DS-CDMA with Application to Reduced Dimension Space-Time Rake Receivers," March 1999, pp.2933-2936	☐

INFORMATION DISCLOSURE STATEMENT BY APPLICANT (Not for submission under 37 CFR 1.99)		
	Application Number	12424320
	Filing Date	2009-04-15
	First Named Inventor	ALLES et al.
	Art Unit	3662
	Examiner Name	PHAN, DAO LINDA
	Attorney Docket Number	AND01 082 CONT

	6	A.J. PAULRAJ, C.B. PAPADIAS, "Space-Time Processing for Wireless Communications", IEEE Signal Processing Magazine, Vol. 11, November 1997, pp.49-83	☐
	7	C.B. PAPADIAS, A.J. PAULRAJ , "Space-Time Signal Processing for Wireless Communications: A Survey", Information Systems Laboratory, Stanford University	☐
	8	M. HAARDT, C. BRUNNER, J. NOSSEK, "Joint Estimation of 2-D Arrival Angles, Propagation Delays, and Doppler Frequencies in Wireless Communications," Proc. IEEE Digital Signal Processing Workshop, Volume 1, pages 1-4, Bryce Canyon National Park, Utah, August 1998.	☐
	9	MATI WAX, "Position Location from Sensors with Position Uncertainty," IEEE Transactions Aerospace and Electronic Systems, Volume AES-19, No. 5, September 1983, pp.658-662	☐
	10	D.J. TORRIERI, "Statistical Theory of Passive Location Systems", IEEE Transactions Aerospace and Electronic Systems, Volume AES-20, No. 2, March 1984, pp.183-198	☐
	11	Y.T. CHAN and K.C. HO, "A Simple and Efficient Estimator for Hyperbolic Location", IEEE Transactions Signal Processing, Volume 42, No. 8, August 1994, pp.1905-1915	☐
	12	W.H. FOY, "Position-Location Solutions by Taylor-Series Estimation", IEEE Transactions Aerospace and Electronic Systems, Volume AES-12, No. 2, March 1976, pp.187-194	☐
	13	R.G. STANSFIELD, "Statistical Theory of DF Fixing", Journal IEE 94, Part III A, October 1947, pp.762-770	☐
	14	M.P. WYLIE and J. HOLTZMAN, "The Non-Line of Sight Problem in Mobile Location Estimation", Process IEEE 5th International Conference on Universal Personal Communications, Vol. 2, October 1996, pp.827-831	☐
	15	L.CONG and W. ZHUANG, "Non-Line-of-Sight Error Mitigation in TDOA Mobile Location", Process IEEE Global Telecommunications Conference, Volume 1, September 2001, pp.680-684	☐
	16	P.C. CHEN, "A Non-Line-of-Sight Error Mitigation Algorithm in Location Estimation", Process IEEE Conference on Wireless Communications Networking, Volume 1, 1999, pp.316-320	☐

INFORMATION DISCLOSURE STATEMENT BY APPLICANT (Not for submission under 37 CFR 1.99)		
	Application Number	12424320
	Filing Date	2009-04-15
	First Named Inventor	ALLES et al.
	Art Unit	3662
	Examiner Name	PHAN, DAO LINDA
	Attorney Docket Number	AND01 082 CONT

	17	N.J. THOMAS, D.G.M. CRUICKSHANK and D.I. LAURENSON, "Performance of a TDOA-AOA Hybrid Mobile Location System", 3G Mobile Communication Technologies, Conference Publication No. 477, March 2001, pp.216-220	☐
	18	J. CAFFERY, JR., and G. STUBER, "Subscriber Location in CDMA Cellular Networks," IEEE Transactions on Vehicular Technology, Volume 47, No. 2, May 1998, pp.406-416	☐
	19	J. CAFFERY. JR., "A New Approach to the Geometry of TOA Location," IEEE, VTC 2000, pp.1943-1949	☐
	20	M.SILVENTOINEN and T. RANTALAINEN, "Mobile Station Emergency Locating in GSM", Process IEEE International Conference, Personal Wireless Communications, Volume 1, 1996, pp.232–238.	☐

If you wish to add additional non-patent literature document citation information please click the Add button

EXAMINER SIGNATURE

Examiner Signature		Date Considered	

*EXAMINER: Initial if reference considered, whether or not citation is in conformance with MPEP 609. Draw line through a citation if not in conformance and not considered. Include copy of this form with next communication to applicant.

[1] See Kind Codes of USPTO Patent Documents at www.USPTO.GOV or MPEP 901.04. [2] Enter office that issued the document, by the two-letter code (WIPO Standard ST.3). [3] For Japanese patent documents, the indication of the year of the reign of the Emperor must precede the serial number of the patent document. [4] Kind of document by the appropriate symbols as indicated on the document under WIPO Standard ST.16 if possible. [5] Applicant is to place a check mark here if English language translation is attached.

INFORMATION DISCLOSURE STATEMENT BY APPLICANT (Not for submission under 37 CFR 1.99)		
	Application Number	12424320
	Filing Date	2009-04-15
	First Named Inventor	ALLES et al.
	Art Unit	3662
	Examiner Name	PHAN, DAO LINDA
	Attorney Docket Number	AND01 082 CONT

CERTIFICATION STATEMENT

Please see 37 CFR 1.97 and 1.98 to make the appropriate selection(s):

☐ That each item of information contained in the information disclosure statement was first cited in any communication from a foreign patent office in a counterpart foreign application not more than three months prior to the filing of the information disclosure statement. See 37 CFR 1.97(e)(1).

OR

☐ That no item of information contained in the information disclosure statement was cited in a communication from a foreign patent office in a counterpart foreign application, and, to the knowledge of the person signing the certification after making reasonable inquiry, no item of information contained in the information disclosure statement was known to any individual designated in 37 CFR 1.56(c) more than three months prior to the filing of the information disclosure statement. See 37 CFR 1.97(e)(2).

☐ See attached certification statement.

☐ Fee set forth in 37 CFR 1.17 (p) has been submitted herewith.

☒ None

SIGNATURE

A signature of the applicant or representative is required in accordance with CFR 1.33, 10.18. Please see CFR 1.4(d) for the form of the signature.

Signature	/Mark C. Comtois/	Date (YYYY-MM-DD)	2010-11-22
Name/Print	Mark C. Comtois	Registration Number	46,285

This collection of information is required by 37 CFR 1.97 and 1.98. The information is required to obtain or retain a benefit by the public which is to file (and by the USPTO to process) an application. Confidentiality is governed by 35 U.S.C. 122 and 37 CFR 1.14. This collection is estimated to take 1 hour to complete, including gathering, preparing and submitting the completed application form to the USPTO. Time will vary depending upon the individual case. Any comments on the amount of time you require to complete this form and/or suggestions for reducing this burden, should be sent to the Chief Information Officer, U.S. Patent and Trademark Office, U.S. Department of Commerce, P.O. Box 1450, Alexandria, VA 22313-1450. DO NOT SEND FEES OR COMPLETED FORMS TO THIS ADDRESS. **SEND TO: Commissioner for Patents, P.O. Box 1450, Alexandria, VA 22313-1450.**

PTO/SB/08a (05-07)
Approved for use through 09/30/2007. OMB 0651-0031
U.S. Patent and Trademark Office; U.S. DEPARTMENT OF COMMERCE
Under the Paperwork Reduction Act of 1995, no persons are required to respond to a collection of information unless it contains a valid OMB control number.

INFORMATION DISCLOSURE STATEMENT BY APPLICANT

(Not for submission under 37 CFR 1.99)

Application Number	12424320
Filing Date	2009-04-15
First Named Inventor	ALLES et al.
Art Unit	3662
Examiner Name	PHAN, DAO LINDA
Attorney Docket Number	AND01 082 CONT

U.S.PATENTS

Examiner Initial*	Cite No	Patent Number	Kind Code[1]	Issue Date	Name of Patentee or Applicant of cited Document	Pages,Columns,Lines where Relevant Passages or Relevant Figures Appear
	1	6014102	A	2000-01-11	Mitzlaff et al.	
	2	3659085	A	1972-04-25	POTTER BASIL E et al.	
	3	3150372	A	1964-09-22	JR. EDWARD J. GROTH	

If you wish to add additional U.S. Patent citation information please click the Add button.

U.S.PATENT APPLICATION PUBLICATIONS

Examiner Initial*	Cite No	Publication Number	Kind Code[1]	Publication Date	Name of Patentee or Applicant of cited Document	Pages,Columns,Lines where Relevant Passages or Relevant Figures Appear
	1					

If you wish to add additional U.S. Published Application citation information please click the Add button.

FOREIGN PATENT DOCUMENTS

Examiner Initial*	Cite No	Foreign Document Number[3]	Country Code[2] i	Kind Code[4]	Publication Date	Name of Patentee or Applicant of cited Document	Pages,Columns,Lines where Relevant Passages or Relevant Figures Appear	T[5]
	1							☐

INFORMATION DISCLOSURE STATEMENT BY APPLICANT (Not for submission under 37 CFR 1.99)		
	Application Number	12424320
	Filing Date	2009-04-15
	First Named Inventor	ALLES et al.
	Art Unit	3662
	Examiner Name	PHAN, DAO LINDA
	Attorney Docket Number	AND01 082 CONT

If you wish to add additional Foreign Patent Document citation information please click the Add button

NON-PATENT LITERATURE DOCUMENTS

Examiner Initials*	Cite No	Include name of the author (in CAPITAL LETTERS), title of the article (when appropriate), title of the item (book, magazine, journal, serial, symposium, catalog, etc), date, pages(s), volume-issue number(s), publisher, city and/or country where published.	T5
	1	Y. ZHAO, "Standardization of Mobile Phone Positioning for 3G Systems," IEEE Communications Magazine, July 2002, pp.108-116.	☐
	2	C. DRANE, M. MACNAUGHTAN, and C. SCOTT, "Positioning GSM Telephones," IEEE Communications Magazine, April 1998; pp.46-54, 59.	☐
	3	J. CAFFERY, JR., and G. STUBER, "Overview of Radiolocation in CDMA Cellular Systems," IEEE Communications Magazine, April 1998, pp.38-45.	☐
	4	T. RAPPAPORT, J.H. REED and B.D. WOERNER, "Position Location Using Wireless Communications on Highways of the Future," IEEE Communications Magazine, October 1996, pp.33-41.	☐
	5	I. ZISKIND and M. WAX, "Maximum Likelihood Localization of Multiple Sources by Alternating Projection," IEEE Transactions on Acoustics, Speech, and Signal Porcessing, Volume 36, No. 10, pp.1553-1560, October 1988.	☐
	6	G.W.K. COLMAN, "A Comparison of the Accuracy of TDOA and TOA Location Algorithms with Equivalent Receiver Geometry," Defence R&D Canada Technical Memorandum (DREO TM 2001-063), October 2001, pp.1-53	☐
	7	L. MAILAENDER, "On the Geolocation Bounds for Round-Trip Time-of-Arrival and All Non-Line-of-Sight Channels", EURASIP Journal on Advances in Signal Processing, Volume 2008, pp.1-10	☐
	8	N. AGARWAL, L. CHAUDRAN-WADI, and V. APTE, "Capacity Analysis of the GSM Short Message Service", Indian Institute of Technology Bombay, www.cse.iitb.ac.in/~varsha/allpapers/wireless/ncc03cam.pdf, 2004, pp.1-5	☐
	9	J.D. BARD, and F.M. HAM, "Time Difference of Arrival Dilution of Precision and Applications," IEEE Transactions on Signal Processing, Volume 47, No. 2, pp.521-523, February 1999.	☐

INFORMATION DISCLOSURE STATEMENT BY APPLICANT (Not for submission under 37 CFR 1.99)		
	Application Number	12424320
	Filing Date	2009-04-15
	First Named Inventor	ALLES et al.
	Art Unit	3662
	Examiner Name	PHAN, DAO LINDA
	Attorney Docket Number	AND01 082 CONT

	10	K.C. HO, and W. XU, "An Accurate Algebraic Solution for Moving Source Location Using TDOA and FDOA Measurements", IEEE Transactions on Signal Processing, Volume 52, No. 9, September 2004, pp.2453-2463	☐
	11	C.H. KNAPP and G.C. CARTER, "The Generalized Correlation Method for Estimation of Time Delay," IEEE Transactions on Acoustics, Speech, and Signal Processing, Volume ASSP-24, No. 4, August 1976, pp.320-327	☐
	12	M. RAHNEMA, "Overview of the GSM System and Protocol Architecture," IEEE Communications Magazine, April 1993, pp.92-100	☐
	13	S. STEIN, "Algorithms for Ambiguity Function Processing," IEEE Transactions on Acoustics, Speech, and Signal Processing, Volume ASSP-29, No. 3, June 1981, pp.588-599	☐
	14	M. VANDERVEEN, C.B. PAPADIAS, and A. PAULRAJ, "Joint Angle and Delay Estimation (JADE) for Multipath Signals Arriving at an Antenna Array", IEEE Communications Letters, Volume 1, No. 1, January 1997, pp.12-14	☐
	15	M. WAX and I. ZISKIND, "On Unique Localization of Multiple Sources by Passive Sensor Arrays," IEEE Transactions on Acoustics, Speech, and Signal Processing, Volume 37, No. 7, July 1989, pp.996-1000	☐
	16	B. YANG, "Projection Approximation Subspace Tracking," IEEE Transactions on Signal Processing, Volume 43, No. 1, January 1995, pp.95-107	☐

If you wish to add additional non-patent literature document citation information please click the Add button

EXAMINER SIGNATURE

Examiner Signature		Date Considered	

*EXAMINER: Initial if reference considered, whether or not citation is in conformance with MPEP 609. Draw line through a citation if not in conformance and not considered. Include copy of this form with next communication to applicant.

[1] See Kind Codes of USPTO Patent Documents at www.USPTO.GOV or MPEP 901.04. [2] Enter office that issued the document, by the two-letter code (WIPO Standard ST.3). [3] For Japanese patent documents, the indication of the year of the reign of the Emperor must precede the serial number of the patent document. [4] Kind of document by the appropriate symbols as indicated on the document under WIPO Standard ST.16 if possible. [5] Applicant is to place a check mark here if English language translation is attached.

INFORMATION DISCLOSURE STATEMENT BY APPLICANT (Not for submission under 37 CFR 1.99)		
	Application Number	12424320
	Filing Date	2009-04-15
	First Named Inventor	ALLES et al.
	Art Unit	3662
	Examiner Name	PHAN, DAO LINDA
	Attorney Docket Number	AND01 082 CONT

CERTIFICATION STATEMENT

Please see 37 CFR 1.97 and 1.98 to make the appropriate selection(s):

☐ That each item of information contained in the information disclosure statement was first cited in any communication from a foreign patent office in a counterpart foreign application not more than three months prior to the filing of the information disclosure statement. See 37 CFR 1.97(e)(1).

OR

☐ That no item of information contained in the information disclosure statement was cited in a communication from a foreign patent office in a counterpart foreign application, and, to the knowledge of the person signing the certification after making reasonable inquiry, no item of information contained in the information disclosure statement was known to any individual designated in 37 CFR 1.56(c) more than three months prior to the filing of the information disclosure statement. See 37 CFR 1.97(e)(2).

☐ See attached certification statement.

☐ Fee set forth in 37 CFR 1.17 (p) has been submitted herewith.

☒ None

SIGNATURE

A signature of the applicant or representative is required in accordance with CFR 1.33, 10.18. Please see CFR 1.4(d) for the form of the signature.

Signature	/Mark C. Comtois/	Date (YYYY-MM-DD)	2010-11-22
Name/Print	Mark C. Comtois	Registration Number	46,285

This collection of information is required by 37 CFR 1.97 and 1.98. The information is required to obtain or retain a benefit by the public which is to file (and by the USPTO to process) an application. Confidentiality is governed by 35 U.S.C. 122 and 37 CFR 1.14. This collection is estimated to take 1 hour to complete, including gathering, preparing and submitting the completed application form to the USPTO. Time will vary depending upon the individual case. Any comments on the amount of time you require to complete this form and/or suggestions for reducing this burden, should be sent to the Chief Information Officer, U.S. Patent and Trademark Office, U.S. Department of Commerce, P.O. Box 1450, Alexandria, VA 22313-1450. DO NOT SEND FEES OR COMPLETED FORMS TO THIS ADDRESS. **SEND TO: Commissioner for Patents, P.O. Box 1450, Alexandria, VA 22313-1450.**

Electronic Acknowledgement Receipt

EFS ID:	8888950
Application Number:	12424320
International Application Number:	
Confirmation Number:	1334
Title of Invention:	METHOD TO MODIFY CALIBRATION DATA USED TO LOCATE A MOBILE UNIT
First Named Inventor/Applicant Name:	Martin Alles
Customer Number:	79172
Filer:	Mark Charles Comtois/nicola kinney
Filer Authorized By:	Mark Charles Comtois
Attorney Docket Number:	AND01 082 CONT
Receipt Date:	22-NOV-2010
Filing Date:	15-APR-2009
Time Stamp:	15:22:17
Application Type:	Utility under 35 USC 111(a)

Payment information:

Submitted with Payment	no

File Listing:

Document Number	Document Description	File Name	File Size(Bytes)/ Message Digest	Multi Part /.zip	Pages (if appl.)
1	Information Disclosure Statement (IDS) Filed (SB/08)	082contgeo1.pdf	501678 3ab17159b9507eb7c95adf7d631937a128b802cc	no	9

Warnings:

Information:

This is not an USPTO supplied IDS fillable form					
2	Information Disclosure Statement (IDS) Filed (SB/08)	082contgeo2.pdf	288428 f32c314003f3f101171d98738b9fd0f82cff84bf	no	5
Warnings:					
Information:					
This is not an USPTO supplied IDS fillable form					
3	Information Disclosure Statement (IDS) Filed (SB/08)	082conttp1.pdf	377139 2d6606b1a3a207190ee08f69622b7aa525f30a19	no	7
Warnings:					
Information:					
This is not an USPTO supplied IDS fillable form					
4	Information Disclosure Statement (IDS) Filed (SB/08)	082conttp2.pdf	237360 afbe3cc7e107c28c63f80b5191ca592f671df1dc	no	4
Warnings:					
Information:					
This is not an USPTO supplied IDS fillable form					
5	Information Disclosure Statement (IDS) Filed (SB/08)	082conttp3.pdf	263144 e5e5ebf3a732264db8114e5d64082ce437bd4c62	no	4
Warnings:					
Information:					
This is not an USPTO supplied IDS fillable form					
			Total Files Size (in bytes):	1667749	

This Acknowledgement Receipt evidences receipt on the noted date by the USPTO of the indicated documents, characterized by the applicant, and including page counts, where applicable. It serves as evidence of receipt similar to a Post Card, as described in MPEP 503.

<u>New Applications Under 35 U.S.C. 111</u>
If a new application is being filed and the application includes the necessary components for a filing date (see 37 CFR 1.53(b)-(d) and MPEP 506), a Filing Receipt (37 CFR 1.54) will be issued in due course and the date shown on this Acknowledgement Receipt will establish the filing date of the application.

<u>National Stage of an International Application under 35 U.S.C. 371</u>
If a timely submission to enter the national stage of an international application is compliant with the conditions of 35 U.S.C. 371 and other applicable requirements a Form PCT/DO/EO/903 indicating acceptance of the application as a national stage submission under 35 U.S.C. 371 will be issued in addition to the Filing Receipt, in due course.

<u>New International Application Filed with the USPTO as a Receiving Office</u>
If a new international application is being filed and the international application includes the necessary components for an international filing date (see PCT Article 11 and MPEP 1810), a Notification of the International Application Number and of the International Filing Date (Form PCT/RO/105) will be issued in due course, subject to prescriptions concerning national security, and the date shown on this Acknowledgement Receipt will establish the international filing date of the application.

PTO/SB/08a (05-07)
Approved for use through 09/30/2007. OMB 0651-0031
U.S. Patent and Trademark Office; U.S. DEPARTMENT OF COMMERCE
Under the Paperwork Reduction Act of 1995, no persons are required to respond to a collection of information unless it contains a valid OMB control number.

INFORMATION DISCLOSURE STATEMENT BY APPLICANT

(Not for submission under 37 CFR 1.99)

Application Number	12424320
Filing Date	2009-04-15
First Named Inventor	ALLES et al.
Art Unit	3662
Examiner Name	PHAN, DAO LINDA
Attorney Docket Number	AND01 082 CONT

U.S.PATENTS

Examiner Initial*	Cite No	Patent Number	Kind Code[1]	Issue Date	Name of Patentee or Applicant of cited Document	Pages,Columns,Lines where Relevant Passages or Relevant Figures Appear
	1	6920329	B2	2005-07-19	Kennedy, Jr. et al.	
	2	6987979	B2	2006-01-17	Carlsson	
	3	6859172	B2	2005-02-22	Powers et al.	
	4	6201803	B1	2001-03-13	Munday et al.	
	5	6097959	A	2000-08-01	Yost	
	6	5987329	A	1999-11-16	Yost	
	7	5952969	A	1999-09-14	Hagerman et al.	
	8	5423067	A	1995-06-06	Manabe	

INFORMATION DISCLOSURE STATEMENT BY APPLICANT (Not for submission under 37 CFR 1.99)	Application Number	12424320
	Filing Date	2009-04-15
	First Named Inventor	ALLES et al.
	Art Unit	3662
	Examiner Name	PHAN, DAO LINDA
	Attorney Docket Number	AND01 082 CONT

	9	5372144	A	1994-12-13	Mortier et al.	

If you wish to add additional U.S. Patent citation information please click the Add button.

U.S.PATENT APPLICATION PUBLICATIONS

Examiner Initial*	Cite No	Publication Number	Kind Code[1]	Publication Date	Name of Patentee or Applicant of cited Document	Pages,Columns,Lines where Relevant Passages or Relevant Figures Appear
	1	20040132466	A1	2004-07-08	Kennedy, Jr. et al.	
	2	20040218664	A1	2004-11-04	Kennedy, Jr. et al.	
	3	20040252752	A1	2004-12-16	Kennedy, Jr. et al.	
	4	20040043775	A1	2004-03-04	Kennedy, Jr. et al.	
	5	20030190919	A1	2003-10-09	Niemenmaa	
	6	20050192026	A1	2005-09-01	Carlson, et al.	
	7	20050164712	A1	2005-07-28	Kennedy, Jr. et al.	
	8	20050136945	A1	2005-06-23	Kennedy, Jr. et al.	

INFORMATION DISCLOSURE STATEMENT BY APPLICANT (Not for submission under 37 CFR 1.99)	Application Number	12424320
	Filing Date	2009-04-15
	First Named Inventor	ALLES et al.
	Art Unit	3662
	Examiner Name	PHAN, DAO LINDA
	Attorney Docket Number	AND01 082 CONT

	9	20050058182	A1	2005-03-17	Kennedy, Jr. et al.	
	10	20060003695	A1	2006-01-05	Kennedy, Jr. et al.	
	11	20060116130	A1	2006-06-01	Kennedy, Jr. et al.	
	12	20060125695	A1	2006-06-15	Kennedy, Jr. et al.	
	13	20060141998	A1	2006-06-29	Kennedy, Jr. et al.	
	14	20060154607	A1	2006-07-13	Kennedy, Jr. et al.	
	15	20060240836	A1	2006-10-26	Kennedy, Jr. et al.	
	16	20070202885	A1	2007-08-30	Kennedy, Jr. et al.	
	17	20070087689	A1	2007-04-19	Kennedy, Jr. et al.	
	18	20040203921	A1	2004-10-14	Bromhead, et al.	
	19	20070155401	A1	2007-07-05	Ward, et al.	

INFORMATION DISCLOSURE STATEMENT BY APPLICANT (Not for submission under 37 CFR 1.99)	Application Number	12424320
	Filing Date	2009-04-15
	First Named Inventor	ALLES et al.
	Art Unit	3662
	Examiner Name	PHAN, DAO LINDA
	Attorney Docket Number	AND01 082 CONT

	20	20030139188	A1	2003-07-24	Chen, et al.	
	21	20030203738	A1	2003-10-30	Brown, et al.	

If you wish to add additional U.S. Published Application citation information please click the Add button.

FOREIGN PATENT DOCUMENTS

Examiner Initial*	Cite No	Foreign Document Number[3]	Country Code[2] i	Kind Code[4]	Publication Date	Name of Patentee or Applicant of cited Document	Pages,Columns,Lines where Relevant Passages or Relevant Figures Appear	T[5]
	1							☐

If you wish to add additional Foreign Patent Document citation information please click the Add button

NON-PATENT LITERATURE DOCUMENTS

Examiner Initials*	Cite No	Include name of the author (in CAPITAL LETTERS), title of the article (when appropriate), title of the item (book, magazine, journal, serial, symposium, catalog, etc), date, pages(s), volume-issue number(s), publisher, city and/or country where published.	T[5]
	1		☐

If you wish to add additional non-patent literature document citation information please click the Add button

EXAMINER SIGNATURE

Examiner Signature		Date Considered	

*EXAMINER: Initial if reference considered, whether or not citation is in conformance with MPEP 609. Draw line through a citation if not in conformance and not considered. Include copy of this form with next communication to applicant.

[1] See Kind Codes of USPTO Patent Documents at www.USPTO.GOV or MPEP 901.04. [2] Enter office that issued the document, by the two-letter code (WIPO Standard ST.3). [3] For Japanese patent documents, the indication of the year of the reign of the Emperor must precede the serial number of the patent document. [4] Kind of document by the appropriate symbols as indicated on the document under WIPO Standard ST.16 if possible. [5] Applicant is to place a check mark here if English language translation is attached.

INFORMATION DISCLOSURE STATEMENT BY APPLICANT (Not for submission under 37 CFR 1.99)		
	Application Number	12424320
	Filing Date	2009-04-15
	First Named Inventor	ALLES et al.
	Art Unit	3662
	Examiner Name	PHAN, DAO LINDA
	Attorney Docket Number	AND01 082 CONT

CERTIFICATION STATEMENT

Please see 37 CFR 1.97 and 1.98 to make the appropriate selection(s):

☐ That each item of information contained in the information disclosure statement was first cited in any communication from a foreign patent office in a counterpart foreign application not more than three months prior to the filing of the information disclosure statement. See 37 CFR 1.97(e)(1).

OR

☐ That no item of information contained in the information disclosure statement was cited in a communication from a foreign patent office in a counterpart foreign application, and, to the knowledge of the person signing the certification after making reasonable inquiry, no item of information contained in the information disclosure statement was known to any individual designated in 37 CFR 1.56(c) more than three months prior to the filing of the information disclosure statement. See 37 CFR 1.97(e)(2).

☐ See attached certification statement.

☐ Fee set forth in 37 CFR 1.17 (p) has been submitted herewith.

☒ None

SIGNATURE

A signature of the applicant or representative is required in accordance with CFR 1.33, 10.18. Please see CFR 1.4(d) for the form of the signature.

Signature	/Mark C. Comtois/	Date (YYYY-MM-DD)	2010-11-22
Name/Print	Mark C. Comtois	Registration Number	46,285

This collection of information is required by 37 CFR 1.97 and 1.98. The information is required to obtain or retain a benefit by the public which is to file (and by the USPTO to process) an application. Confidentiality is governed by 35 U.S.C. 122 and 37 CFR 1.14. This collection is estimated to take 1 hour to complete, including gathering, preparing and submitting the completed application form to the USPTO. Time will vary depending upon the individual case. Any comments on the amount of time you require to complete this form and/or suggestions for reducing this burden, should be sent to the Chief Information Officer, U.S. Patent and Trademark Office, U.S. Department of Commerce, P.O. Box 1450, Alexandria, VA 22313-1450. DO NOT SEND FEES OR COMPLETED FORMS TO THIS ADDRESS. **SEND TO: Commissioner for Patents, P.O. Box 1450, Alexandria, VA 22313-1450.**

PTO/SB/08a (05-07)
Approved for use through 09/30/2007. OMB 0651-0031
U.S. Patent and Trademark Office; U.S. DEPARTMENT OF COMMERCE
Under the Paperwork Reduction Act of 1995, no persons are required to respond to a collection of information unless it contains a valid OMB control number.

INFORMATION DISCLOSURE STATEMENT BY APPLICANT

(Not for submission under 37 CFR 1.99)

Application Number	12424320
Filing Date	2009-04-15
First Named Inventor	ALLES et al.
Art Unit	3662
Examiner Name	PHAN, DAO LINDA
Attorney Docket Number	AND01 082 CONT

U.S.PATENTS

Examiner Initial*	Cite No	Patent Number	Kind Code[1]	Issue Date	Name of Patentee or Applicant of cited Document	Pages,Columns,Lines where Relevant Passages or Relevant Figures Appear
	1	7593738	B2	2009-09-22	Anderson	
	2	7440762	B2	2005-07-07	Maloney et al.	
	3	7427952	B2	2006-11-23	Bull et al.	
	4	7340259	B2	2008-03-04	Maloney	
	5	7271765	B2	2005-09-22	Stilp et al.	
	6	7167713	B2	2007-01-23	Anderson	
	7	7023383	B2	2006-04-04	Stilp et al.	
	8	6996392	B2	2006-02-07	Anderson	

INFORMATION DISCLOSURE STATEMENT BY APPLICANT (Not for submission under 37 CFR 1.99)	Application Number	12424320
	Filing Date	2009-04-15
	First Named Inventor	ALLES et al.
	Art Unit	3662
	Examiner Name	PHAN, DAO LINDA
	Attorney Docket Number	AND01 082 CONT

	9	6876859	B2	2005-04-05	Anderson et al.	
	10	6873290	B2	2005-03-29	Anderson et al.	
	11	6782264	B2	2004-08-24	Anderson	
	12	6771625	B1	2004-08-03	Beal	
	13	6765531	B2	2004-07-20	Anderson	
	14	6661379	B2	2003-12-09	Stilp et al.	
	15	6646604	B2	2003-11-11	Anderson	
	16	6603428	B2	2003-08-05	Stilp	
	17	6563460	B2	2003-05-13	Stilp et al.	
	18	6546256	B1	2003-04-08	Maloney	
	19	6519465	B2	2003-02-11	Stilp et al.	

INFORMATION DISCLOSURE STATEMENT BY APPLICANT (Not for submission under 37 CFR 1.99)		
	Application Number	12424320
	Filing Date	2009-04-15
	First Named Inventor	ALLES et al.
	Art Unit	3662
	Examiner Name	PHAN, DAO LINDA
	Attorney Docket Number	AND01 082 CONT

	20	6492944	B1	2002-12-10	Stilp	
	21	6483460	B2	2002-11-19	Stilp et al.	
	22	6463290	B1	2002-10-08	Stilp et al.	
	23	6400320	B1	2002-06-04	Stilp et al.	
	24	6388618	B1	2002-05-14	Stilp et al.	
	25	6366241	B2	2002-04-02	Pack	
	26	6351235	B1	2002-02-26	Stilp	
	27	6334059	B1	2001-12-25	Stilp et al.	
	28	6317604	B1	2001-11-13	Kovach, Jr. et al.	
	29	6317081	B1	2001-11-13	Stilp	
	30	6288676	B1	2001-09-11	Maloney	

INFORMATION DISCLOSURE STATEMENT BY APPLICANT (Not for submission under 37 CFR 1.99)		
	Application Number	12424320
	Filing Date	2009-04-15
	First Named Inventor	ALLES et al.
	Art Unit	3662
	Examiner Name	PHAN, DAO LINDA
	Attorney Docket Number	AND01 082 CONT

	31	6288675	B1	2001-09-11	Maloney	
	32	6285321	B1	2001-09-04	Stilp et al.	
	33	6281834	B1	2001-08-28	Stilp	
	34	6266013	B1	2001-07-24	Stilp et al.	
	35	6184829	B1	2001-02-06	Stilp	
	36	6172644	B1	2001-01-09	Stilp	
	37	6127975	A	2000-10-03	Maloney	
	38	6119013	A	2000-09-12	Maloney et al.	
	39	6115599	A	2000-09-05	Stilp	
	40	6108555	A	2000-08-22	Maloney et al.	
	41	6101178	A	2000-08-08	Beal	

INFORMATION DISCLOSURE STATEMENT BY APPLICANT (Not for submission under 37 CFR 1.99)		
	Application Number	12424320
	Filing Date	2009-04-15
	First Named Inventor	ALLES et al.
	Art Unit	3662
	Examiner Name	PHAN, DAO LINDA
	Attorney Docket Number	AND01 082 CONT

	42	6097336	A	2000-08-01	Stilp	
	43	6091362	A	2000-07-18	Stilp	
	44	6047192	A	2000-04-04	Maloney	
	45	5959580	A	1999-09-28	Maloney et al.	
	46	5608410	A	1997-03-04	Stilp et al.	
	47	5327144	A	1994-07-05	Stilp et al.	
	48	4728959	A	1988-03-01	Maloney	

If you wish to add additional U.S. Patent citation information please click the Add button.

U.S.PATENT APPLICATION PUBLICATIONS

Examiner Initial*	Cite No	Publication Number	Kind Code[1]	Publication Date	Name of Patentee or Applicant of cited Document	Pages,Columns,Lines where Relevant Passages or Relevant Figures Appear
	1	20080160952	A1	2008-07-03	Bull, et al.	
	2	20080160953	A1	2008-07-03	Mia, et al.	

If you wish to add additional U.S. Published Application citation information please click the Add button.

INFORMATION DISCLOSURE STATEMENT BY APPLICANT (Not for submission under 37 CFR 1.99)		
	Application Number	12424320
	Filing Date	2009-04-15
	First Named Inventor	ALLES et al.
	Art Unit	3662
	Examiner Name	PHAN, DAO LINDA
	Attorney Docket Number	AND01 082 CONT

FOREIGN PATENT DOCUMENTS

Examiner Initial*	Cite No	Foreign Document Number[3]	Country Code[2] i	Kind Code[4]	Publication Date	Name of Patentee or Applicant of cited Document	Pages,Columns,Lines where Relevant Passages or Relevant Figures Appear	T[5]
	1	06088472	WO	A1	2006-08-24	Anderson et al.		☐

If you wish to add additional Foreign Patent Document citation information please click the Add button

NON-PATENT LITERATURE DOCUMENTS

Examiner Initials*	Cite No	Include name of the author (in CAPITAL LETTERS), title of the article (when appropriate), title of the item (book, magazine, journal, serial, symposium, catalog, etc), date, pages(s), volume-issue number(s), publisher, city and/or country where published.	T[5]
	1		☐

If you wish to add additional non-patent literature document citation information please click the Add button

EXAMINER SIGNATURE

Examiner Signature		Date Considered	

*EXAMINER: Initial if reference considered, whether or not citation is in conformance with MPEP 609. Draw line through a citation if not in conformance and not considered. Include copy of this form with next communication to applicant.

[1] See Kind Codes of USPTO Patent Documents at www.USPTO.GOV or MPEP 901.04. [2] Enter office that issued the document, by the two-letter code (WIPO Standard ST.3). [3] For Japanese patent documents, the indication of the year of the reign of the Emperor must precede the serial number of the patent document. [4] Kind of document by the appropriate symbols as indicated on the document under WIPO Standard ST.16 if possible. [5] Applicant is to place a check mark here if English language translation is attached.

INFORMATION DISCLOSURE STATEMENT BY APPLICANT (Not for submission under 37 CFR 1.99)		
	Application Number	12424320
	Filing Date	2009-04-15
	First Named Inventor	ALLES et al.
	Art Unit	3662
	Examiner Name	PHAN, DAO LINDA
	Attorney Docket Number	AND01 082 CONT

CERTIFICATION STATEMENT

Please see 37 CFR 1.97 and 1.98 to make the appropriate selection(s):

☐ That each item of information contained in the information disclosure statement was first cited in any communication from a foreign patent office in a counterpart foreign application not more than three months prior to the filing of the information disclosure statement. See 37 CFR 1.97(e)(1).

OR

☐ That no item of information contained in the information disclosure statement was cited in a communication from a foreign patent office in a counterpart foreign application, and, to the knowledge of the person signing the certification after making reasonable inquiry, no item of information contained in the information disclosure statement was known to any individual designated in 37 CFR 1.56(c) more than three months prior to the filing of the information disclosure statement. See 37 CFR 1.97(e)(2).

☐ See attached certification statement.

☐ Fee set forth in 37 CFR 1.17 (p) has been submitted herewith.

☒ None

SIGNATURE

A signature of the applicant or representative is required in accordance with CFR 1.33, 10.18. Please see CFR 1.4(d) for the form of the signature.

Signature	/Mark C. Comtois/	Date (YYYY-MM-DD)	2010-11-22
Name/Print	Mark C. Comtois	Registration Number	46,285

This collection of information is required by 37 CFR 1.97 and 1.98. The information is required to obtain or retain a benefit by the public which is to file (and by the USPTO to process) an application. Confidentiality is governed by 35 U.S.C. 122 and 37 CFR 1.14. This collection is estimated to take 1 hour to complete, including gathering, preparing and submitting the completed application form to the USPTO. Time will vary depending upon the individual case. Any comments on the amount of time you require to complete this form and/or suggestions for reducing this burden, should be sent to the Chief Information Officer, U.S. Patent and Trademark Office, U.S. Department of Commerce, P.O. Box 1450, Alexandria, VA 22313-1450. DO NOT SEND FEES OR COMPLETED FORMS TO THIS ADDRESS. **SEND TO: Commissioner for Patents, P.O. Box 1450, Alexandria, VA 22313-1450.**

PTO/SB/08a (05-07)
Approved for use through 09/30/2007. OMB 0651-0031
U.S. Patent and Trademark Office; U.S. DEPARTMENT OF COMMERCE
Under the Paperwork Reduction Act of 1995, no persons are required to respond to a collection of information unless it contains a valid OMB control number.

INFORMATION DISCLOSURE STATEMENT BY APPLICANT

(Not for submission under 37 CFR 1.99)

Application Number	12424320
Filing Date	2009-04-15
First Named Inventor	ALLES et al.
Art Unit	3662
Examiner Name	PHAN, DAO LINDA
Attorney Docket Number	AND01 082 CONT

U.S.PATENTS

Examiner Initial*	Cite No	Patent Number	Kind Code[1]	Issue Date	Name of Patentee or Applicant of cited Document	Pages,Columns,Lines where Relevant Passages or Relevant Figures Appear
	1					

If you wish to add additional U.S. Patent citation information please click the Add button.

U.S.PATENT APPLICATION PUBLICATIONS

Examiner Initial*	Cite No	Publication Number	Kind Code[1]	Publication Date	Name of Patentee or Applicant of cited Document	Pages,Columns,Lines where Relevant Passages or Relevant Figures Appear
	1	20080161015	A1	2008-01-02	Maloney, et al.	
	2	20020172223	A1	2002-11-21	Stilp, et al.	
	3	20080132247	A1	2008-06-05	Anderson, et al.	
	4	20080132244	A1	2008-06-05	Anderson, et al.	
	5	20080158059	A1	2008-07-03	Bull, et al.	

INFORMATION DISCLOSURE STATEMENT BY APPLICANT (Not for submission under 37 CFR 1.99)		
	Application Number	12424320
	Filing Date	2009-04-15
	First Named Inventor	ALLES et al.
	Art Unit	3662
	Examiner Name	PHAN, DAO LINDA
	Attorney Docket Number	AND01 082 CONT

	6	20080261614	A1	2008-10-23	Mia, et al.	
	7	20080261613	A1	2008-10-23	Anderson, et al.	
	8	20080261612	A1	2008-10-23	Mia, et al.	
	9	20080261611	A1	2008-10-23	Mia, et al.	
	10	20080137524	A1	2008-06-12	Anderson, et al.	
	11	20080248811	A1	2008-10-09	Maloney, et al.	
	12	20070111746	A1	2007-05-17	Anderson, et al.	
	13	20070155489	A1	2007-07-05	Beckley, et al.	
	14	20090005061	A1	2009-01-01	Ward, et al.	
	15	20070155401	A1	2007-07-05	Ward, et al.	
	16	20060030333	A1	2006-02-09	Ward, et al.	

INFORMATION DISCLOSURE STATEMENT BY APPLICANT (Not for submission under 37 CFR 1.99)		
	Application Number	12424320
	Filing Date	2009-04-15
	First Named Inventor	ALLES et al.
	Art Unit	3662
	Examiner Name	PHAN, DAO LINDA
	Attorney Docket Number	AND01 082 CONT

	17	20030064734	A1	2003-04-03	Stilp, et al.	
	18	20060003775	A1	2006-01-05	Bull, et al.	

If you wish to add additional U.S. Published Application citation information please click the Add button.

FOREIGN PATENT DOCUMENTS

Examiner Initial*	Cite No	Foreign Document Number[3]	Country Code[2] i	Kind Code[4]	Publication Date	Name of Patentee or Applicant of cited Document	Pages,Columns,Lines where Relevant Passages or Relevant Figures Appear	T[5]
	1							☐

If you wish to add additional Foreign Patent Document citation information please click the Add button

NON-PATENT LITERATURE DOCUMENTS

Examiner Initials*	Cite No	Include name of the author (in CAPITAL LETTERS), title of the article (when appropriate), title of the item (book, magazine, journal, serial, symposium, catalog, etc), date, pages(s), volume-issue number(s), publisher, city and/or country where published.	T[5]
	1		☐

If you wish to add additional non-patent literature document citation information please click the Add button

EXAMINER SIGNATURE

Examiner Signature		Date Considered	

*EXAMINER: Initial if reference considered, whether or not citation is in conformance with MPEP 609. Draw line through a citation if not in conformance and not considered. Include copy of this form with next communication to applicant.

[1] See Kind Codes of USPTO Patent Documents at www.USPTO.GOV or MPEP 901.04. [2] Enter office that issued the document, by the two-letter code (WIPO Standard ST.3). [3] For Japanese patent documents, the indication of the year of the reign of the Emperor must precede the serial number of the patent document. [4] Kind of document by the appropriate symbols as indicated on the document under WIPO Standard ST.16 if possible. [5] Applicant is to place a check mark here if English language translation is attached.

INFORMATION DISCLOSURE STATEMENT BY APPLICANT (Not for submission under 37 CFR 1.99)		
	Application Number	12424320
	Filing Date	2009-04-15
	First Named Inventor	ALLES et al.
	Art Unit	3662
	Examiner Name	PHAN, DAO LINDA
	Attorney Docket Number	AND01 082 CONT

CERTIFICATION STATEMENT

Please see 37 CFR 1.97 and 1.98 to make the appropriate selection(s):

☐ That each item of information contained in the information disclosure statement was first cited in any communication from a foreign patent office in a counterpart foreign application not more than three months prior to the filing of the information disclosure statement. See 37 CFR 1.97(e)(1).

OR

☐ That no item of information contained in the information disclosure statement was cited in a communication from a foreign patent office in a counterpart foreign application, and, to the knowledge of the person signing the certification after making reasonable inquiry, no item of information contained in the information disclosure statement was known to any individual designated in 37 CFR 1.56(c) more than three months prior to the filing of the information disclosure statement. See 37 CFR 1.97(e)(2).

☐ See attached certification statement.

☐ Fee set forth in 37 CFR 1.17 (p) has been submitted herewith.

☒ None

SIGNATURE

A signature of the applicant or representative is required in accordance with CFR 1.33, 10.18. Please see CFR 1.4(d) for the form of the signature.

Signature	/Mark C. Comtois/	Date (YYYY-MM-DD)	2010-11-22
Name/Print	Mark C. Comtois	Registration Number	46,285

This collection of information is required by 37 CFR 1.97 and 1.98. The information is required to obtain or retain a benefit by the public which is to file (and by the USPTO to process) an application. Confidentiality is governed by 35 U.S.C. 122 and 37 CFR 1.14. This collection is estimated to take 1 hour to complete, including gathering, preparing and submitting the completed application form to the USPTO. Time will vary depending upon the individual case. Any comments on the amount of time you require to complete this form and/or suggestions for reducing this burden, should be sent to the Chief Information Officer, U.S. Patent and Trademark Office, U.S. Department of Commerce, P.O. Box 1450, Alexandria, VA 22313-1450. DO NOT SEND FEES OR COMPLETED FORMS TO THIS ADDRESS. **SEND TO: Commissioner for Patents, P.O. Box 1450, Alexandria, VA 22313-1450.**

PTO/SB/08a (01-10)
Approved for use through 07/31/2012. OMB 0651-0031
U.S. Patent and Trademark Office; U.S. DEPARTMENT OF COMMERCE

Under the Paperwork Reduction Act of 1995, no persons are required to respond to a collection of information unless it contains a valid OMB control number.

INFORMATION DISCLOSURE STATEMENT BY APPLICANT

(Not for submission under 37 CFR 1.99)

Application Number	12424320
Filing Date	2009-04-15
First Named Inventor	ALLES et al.
Art Unit	3662
Examiner Name	PHAN, DAO LINDA
Attorney Docket Number	AND01 082 CONT

U.S.PATENTS

Examiner Initial*	Cite No	Patent Number	Kind Code[1]	Issue Date	Name of Patentee or Applicant of cited Document	Pages,Columns,Lines where Relevant Passages or Relevant Figures Appear
	1	5960341	A	1999-09-28	LeBlanc et al.	

If you wish to add additional U.S. Patent citation information please click the Add button.

U.S.PATENT APPLICATION PUBLICATIONS

Examiner Initial*	Cite No	Publication Number	Kind Code[1]	Publication Date	Name of Patentee or Applicant of cited Document	Pages,Columns,Lines where Relevant Passages or Relevant Figures Appear
	1	20050078033	A1	2005-04-14	Tamaki et al.	
	2	20050040968	A1	2005-02-24	Damarla et al.	
	3	20050266855	A1	2005-12-01	Zeng et al.	

If you wish to add additional U.S. Published Application citation information please click the Add button.

FOREIGN PATENT DOCUMENTS

Examiner Initial*	Cite No	Foreign Document Number[3]	Country Code[2] i	Kind Code[4]	Publication Date	Name of Patentee or Applicant of cited Document	Pages,Columns,Lines where Relevant Passages or Relevant Figures Appear	T[5]
	1	1471688	EP	A2	2004-10-27	Microsoft Corp.		☐

INFORMATION DISCLOSURE STATEMENT BY APPLICANT (Not for submission under 37 CFR 1.99)	Application Number	12424320
	Filing Date	2009-04-15
	First Named Inventor	ALLES et al.
	Art Unit	3662
	Examiner Name	PHAN, DAO LINDA
	Attorney Docket Number	AND01 082 CONT

	2	02/082832	WO	A2	2002-10-17	AT&T Wireless		☐

If you wish to add additional Foreign Patent Document citation information please click the Add button

NON-PATENT LITERATURE DOCUMENTS

Examiner Initials*	Cite No	Include name of the author (in CAPITAL LETTERS), title of the article (when appropriate), title of the item (book, magazine, journal, serial, symposium, catalog, etc), date, pages(s), volume-issue number(s), publisher, city and/or country where published.	T[5]
	1		☐

If you wish to add additional non-patent literature document citation information please click the Add button

EXAMINER SIGNATURE

Examiner Signature		Date Considered	

*EXAMINER: Initial if reference considered, whether or not citation is in conformance with MPEP 609. Draw line through a citation if not in conformance and not considered. Include copy of this form with next communication to applicant.

[1] See Kind Codes of USPTO Patent Documents at www.USPTO.GOV or MPEP 901.04. [2] Enter office that issued the document, by the two-letter code (WIPO Standard ST.3). [3] For Japanese patent documents, the indication of the year of the reign of the Emperor must precede the serial number of the patent document. [4] Kind of document by the appropriate symbols as indicated on the document under WIPO Standard ST.16 if possible. [5] Applicant is to place a check mark here if English language translation is attached.

INFORMATION DISCLOSURE STATEMENT BY APPLICANT (Not for submission under 37 CFR 1.99)		
	Application Number	12424320
	Filing Date	2009-04-15
	First Named Inventor	ALLES et al.
	Art Unit	3662
	Examiner Name	PHAN, DAO LINDA
	Attorney Docket Number	AND01 082 CONT

CERTIFICATION STATEMENT

Please see 37 CFR 1.97 and 1.98 to make the appropriate selection(s):

☒ That each item of information contained in the information disclosure statement was first cited in any communication from a foreign patent office in a counterpart foreign application not more than three months prior to the filing of the information disclosure statement. See 37 CFR 1.97(e)(1).

OR

☐ That no item of information contained in the information disclosure statement was cited in a communication from a foreign patent office in a counterpart foreign application, and, to the knowledge of the person signing the certification after making reasonable inquiry, no item of information contained in the information disclosure statement was known to any individual designated in 37 CFR 1.56(c) more than three months prior to the filing of the information disclosure statement. See 37 CFR 1.97(e)(2).

☐ See attached certification statement.

☐ Fee set forth in 37 CFR 1.17 (p) has been submitted herewith.

☐ None

SIGNATURE

A signature of the applicant or representative is required in accordance with CFR 1.33, 10.18. Please see CFR 1.4(d) for the form of the signature.

Signature	/Mark C. Comtois/	Date (YYYY-MM-DD)	2010-10-25
Name/Print	Mark C. Comtois	Registration Number	46,285

This collection of information is required by 37 CFR 1.97 and 1.98. The information is required to obtain or retain a benefit by the public which is to file (and by the USPTO to process) an application. Confidentiality is governed by 35 U.S.C. 122 and 37 CFR 1.14. This collection is estimated to take 1 hour to complete, including gathering, preparing and submitting the completed application form to the USPTO. Time will vary depending upon the individual case. Any comments on the amount of time you require to complete this form and/or suggestions for reducing this burden, should be sent to the Chief Information Officer, U.S. Patent and Trademark Office, U.S. Department of Commerce, P.O. Box 1450, Alexandria, VA 22313-1450. DO NOT SEND FEES OR COMPLETED FORMS TO THIS ADDRESS. **SEND TO: Commissioner for Patents, P.O. Box 1450, Alexandria, VA 22313-1450.**

(19) Europäisches Patentamt
European Patent Office
Office européen des brevets

(11) EP 1 471 688 A2

(12) **EUROPEAN PATENT APPLICATION**

(43) Date of publication:
27.10.2004 Bulletin 2004/44

(51) Int Cl.7: **H04L 12/28**, G01S 5/02

(21) Application number: **04007258.9**

(22) Date of filing: **25.03.2004**

(84) Designated Contracting States:
AT BE BG CH CY CZ DE DK EE ES FI FR GB GR HU IE IT LI LU MC NL PL PT RO SE SI SK TR
Designated Extension States:
AL LT LV MK

(30) Priority: **25.04.2003 US 423093**

(71) Applicant: **MICROSOFT CORPORATION**
Redmond, Washington 98052 (US)

(72) Inventors:
- **Krumm, John, C.**
Redmond, Washington 98052 (US)
- **Platt, John, C.**
Redmond, Washington 98052 (US)

(74) Representative: **Grünecker, Kinkeldey, Stockmair & Schwanhäusser Anwaltssozietät**
Maximilianstrasse 58
80538 München (DE)

(54) **Calibration of a device location measurement system that utilizes radio signal strengths**

(57) An architecture for minimizing calibration effort in an IEEE 802.11 device location measurement system. The calibration technique is based upon a regression function that produces adequately accurate location information as a function of signal strength regardless of gaps in the calibration data or minimally available data. The algorithm takes a set of signal strengths from known room locations in a building and generates a function giving (x,y) as a function of signal strength, which function may then be used for the estimation of new locations. Radial basis functions, which are simple to express and compute, are used for regression. The fact that the algorithm maps signal strength to continuous location makes it possible to skip rooms during calibration, yet still evaluate the location in those rooms.

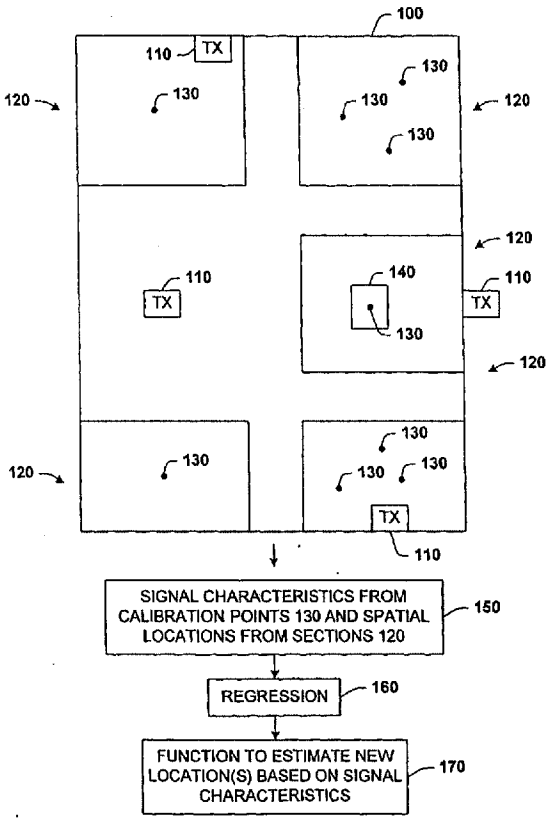

FIG. 1

EP 1 471 688 A2

(19) Europäisches Patentamt
European Patent Office
Office européen des brevets

(11) EP 1 471 688 A2

(12) EUROPEAN PATENT APPLICATION

(43) Date of publication:
27.10.2004 Bulletin 2004/44

(51) Int Cl.7: H04L 12/28, G01S 5/02

(21) Application number: 04007258.9

(22) Date of filing: 25.03.2004

(84) Designated Contracting States:
AT BE BG CH CY CZ DE DK EE ES FI FR GB GR HU IE IT LI LU MC NL PL PT RO SE SI SK TR
Designated Extension States:
AL LT LV MK

(30) Priority: 25.04.2003 US 423093

(71) Applicant: MICROSOFT CORPORATION
Redmond, Washington 98052 (US)

(72) Inventors:
- Krumm, John, C.
Redmond, Washington 98052 (US)
- Platt, John, C.
Redmond, Washington 98052 (US)

(74) Representative: Grünecker, Kinkeldey, Stockmair & Schwanhäusser Anwaltssozietät
Maximilianstrasse 58
80538 München (DE)

(54) Calibration of a device location measurement system that utilizes radio signal strengths

(57) An architecture for minimizing calibration effort in an IEEE 802.11 device location measurement system. The calibration technique is based upon a regression function that produces adequately accurate location information as a function of signal strength regardless of gaps in the calibration data or minimally available data. The algorithm takes a set of signal strengths from known room locations in a building and generates a function giving (x,y) as a function of signal strength, which function may then be used for the estimation of new locations. Radial basis functions, which are simple to express and compute, are used for regression. The fact that the algorithm maps signal strength to continuous location makes it possible to skip rooms during calibration, yet still evaluate the location in those rooms.

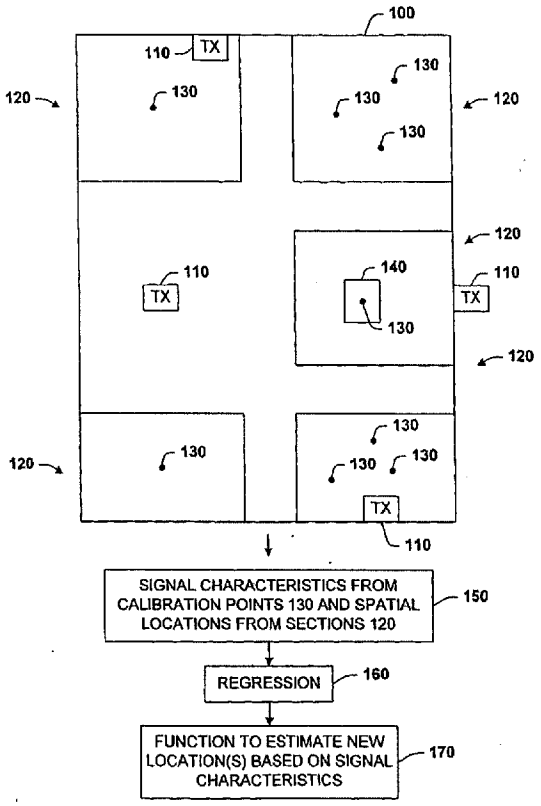

FIG. 1

EP 1 471 688 A2

Printed by Jouve, 75001 PARIS (FR)

Description

TECHNICAL FIELD

[0001] This invention is related to IEEE 802.11 devices, and more specifically, to locating wireless devices using wireless signal strengths.

BACKGROUND OF THE INVENTION

[0002] Knowledge of locations of users and devices inside a building is an important prerequisite for location-based services and aspects of ubiquitous computing. One promising approach to determining location is through triangulation by measuring IEEE 802.11 wireless signal strengths of wireless devices. One of the most attractive features of an IEEE 802.11 location-based system is that it does not require any extra infrastructure beyond a wireless network that already exists in many buildings. This is in contrast to other person-tracking systems that employ active/passive badges and cameras, which in turn require installation and maintenance of extra equipment.

[0003] Using an 802.11 wireless client as a location sensor (*e.g.*, a portable computer as a receiver) is becoming increasingly popular way of enabling location-based services. Triangulation of signal strengths from multiple access points (APs) may be used to pinpoint location of the receiving device down to a few meters. However, this level of accuracy comes at a price of requiring tedious and time-consuming manual labor in order to obtain spatially high-density calibration data of signal strengths as a function of location.

[0004] Knowing radio signal strength measurements on a network client from a few different APs, researchers have shown how to compute location down to a few meters. This type of location measurement is especially attractive because it uses existing devices of a building and its users, and because it functions indoors where global positioning system (GPS) and cell phone location signals often break down. However, the accuracy of such systems usually depends on a meticulous calibration procedure that consists of physically moving a wireless client receiver to many disparate known locations, and different orientations, inside the building. It is often be impracticable to expect anyone to spend resources on such work - when presented with such prospect as part of a new product, software product planners often balk, complaining that system administrators are reluctant to even keep locations of printers updated, much less create and maintain a high-resolution table of IEEE 802.11 signal strengths.

[0005] One alternative to manual calibration is to analytically predict signal strengths based on a floor plan of a building, physical simulation of radio frequency (RF) propagation, and knowledge of the locations of wireless access points. It was discovered, for the chosen simulation method, that physically simulating signal strengths increased median location error by approximately 46% (from 2.94 meters to 4.3 meters) over values obtained by manual calibration. Moreover, a good physical simulation usually requires a more detailed model of the building than is normally available.

[0006] In the realm of IEEE 802.11 locations, one published work was based on the RADAR system, an in-building RF-based location and tracking system. RADAR worked based on a table of indoor locations and corresponding signal strengths. Using a manually calibrated table, the nearest neighbor algorithm gave a median spatial error of approximately 2.94 meters. Another table based on simulated radio wave propagation allowed the avoidance of most of the calibration work at the cost of increasing the median error to 4.3 meters. The RADAR work also looked at the problem of reducing calibration effort. It was found that reducing the number of calibration points from seventy to forty had only a small negative impact on accuracy. In follow-on work, RADAR was enhanced to use a Viterbi-like algorithm on short paths through the building. This further reduced the median error to approximately 2.37 meters.

[0007] As part of Carnegie Mellon's Andrew system, a limited study of an IEEE 802.11 location system was performed using eight discrete locations in a hallway. A table of signal strength versus location was built. It was determined that upon returning to the eight locations, the system inferred the right location 87.5% of the time.

[0008] Another location service used signal-to-noise ratios, instead of the more commonly used raw signal strengths. The location algorithm was a Bayesian network, manually trained at discrete locations in two buildings. The Bayes formulation allowed the inclusion of *a priori* probabilities of a person's location, as well as transition probabilities between locations. In one test on twelve locations in a hallway, the service was capable of identifying the highest probability to the correct location 97% of the time, not counting the 15% of the time it was inconclusive.

[0009] In still another study, IEEE 802.11 was used to compute the location of wireless PocketPCs, both indoors and outdoors. Instead of manual calibration, a formula was used that approximated the distance to a wireless access point as a function of signal strength. Using a hill-climbing algorithm, the system computes location down to about ten meters (approximately thirty-five feet) using signal strengths from multiple access points.

[0010] In yet another study of an IEEE 802.11 location system, Bayesian reasoning and a hidden Markov model were used. Not only were signal strengths taken into account, but also the probability of seeing an access point from a given location. Like other work, it was based upon a manual calibration. The system explicitly modeled orientation and achieved a median spatial error of approximately one meter using calibration samples taken approximately every

1.5 meters in hallways. Although in terms of accuracy, this may be perhaps the best result, the study also acknowledges the problem of calibration effort, and suggests that calibrated locations could be automatically inferred by outfitting the calibrator with an accelerometer and magnetic compass.

[0011] Some of the conventional systems described hereinabove are explicitly working toward more accuracy, but at the expense of increased calibration effort.

SUMMARY OF THE INVENTION

[0012] The following presents a simplified summary of the invention in order to provide a basic understanding of some aspects of the invention. This summary is not an extensive overview of the invention. It is not intended to identify key/critical elements of the invention or to delineate the scope of the invention. Its sole purpose is to present some concepts of the invention in a simplified form as a prelude to the more detailed description that is presented later.

[0013] The present invention disclosed and claimed herein, in one aspect thereof, comprises an IEEE 802.11 location-based technique for coarsely calibrating a system used to determine a precise triangulated location in view of radio signal strengths at a given location. The calibration technique is based upon a regression function that produces adequately accurate location information as a function of signal strength regardless of gaps in the calibration data or minimally available data.

[0014] Since rooms are a natural spatial fiducials in buildings, and assuming that manual calibration is the principal method for some time, the architecture of the present invention discloses a new IEEE 802.11 location system based upon a relatively easy calibration procedure of recording signal strengths down to room resolution (*e.g.*, from an arbitrary point or set of points in each room of the building or from a more precise location within each room). The disclosed location algorithm is designed to work in spite of missing calibration data, that is, data that is unobtainable because a room, set of rooms, or even a building wing, may be inaccessible. The regression algorithm takes a set of signal strengths from known locations in a building and generates a function that maps signal strength to (x,*y*) location. This function may then be used to estimate new location(s). Radial basis functions, which are simple to express and compute, are used for regression.

[0015] The fact that the algorithm regresses on signal strength to provide location makes it possible to skip rooms during calibration, yet still evaluate locations in those rooms. This is more difficult with most conventional IEEE 802.11 location algorithms that instead must classify signal strengths into only previously seen locations. Although accuracy goes down with reduced calibration data, it goes down surprisingly little. The results quantify the tradeoff between accuracy and effort, and suggest a prescription for manually calibrating systems of this type.

[0016] One embodiment provides a more precise location measurement methodology, where calibration is accomplished by placing the receiver at one point at the location to be measured, and measuring signal properties based upon that single receiver location. The user selects the approximate location of the receiver on a map that shows the position of the receiver relative to the location to be measured. Additionally, an averaging function is provided that averages the last ten computed (x,y) locations to further reduce noise.

[0017] In a second embodiment that is less precise, the user moves the receiver around at the location, *e.g.*, in the room, while taking measurements at several calibration points. Thus the exact location of the receiver is not known. For purposes of calibration, the location of the receiver is taken as the (x,y) centroid of the room, no matter where in the room the receiver was located when the measurements were made.

[0018] To the accomplishment of the foregoing and related ends, certain illustrative aspects of the invention are described herein in connection with the following description and the annexed drawings. These aspects are indicative, however, of but a few of the various ways in which the principles of the invention may be employed and the present invention is intended to include all such aspects and their equivalents. Other advantages and novel features of the invention may become apparent from the following detailed description of the invention when considered in conjunction with the drawings.

BRIEF DESCRIPTION OF THE DRAWINGS

[0019]

FIG. 1 illustrates the geometry of the calibration procedure for a system that determines new location(s) based on signal characteristics.

FIG. 2 illustrates a flow chart of the general calibration process of the present invention.

FIG. 3 illustrates a flow chart of a process for determining new location information.

FIG. 4 illustrates a more detailed flow chart of the process for determining the mapping from signal strengths to (x,y) location in accordance with the present invention.

FIG. 5 illustrates a layout of a typical office floor of rooms utilized for a sample application of the calibration process

234

of the present invention.

FIG. 6 illustrates an exemplary screenshot of a graphical user interface for facilitating signal strength logging of the calibration data.

FIG. 7 illustrates a block diagram of a computer operable to execute the disclosed architecture.

FIG. 8 illustrates a schematic block diagram of an exemplary computing environment in accordance with the present invention.

DETAILED DESCRIPTION OF THE INVENTION

[0020] The present invention is now described with reference to the drawings, wherein like reference numerals are used to refer to like elements throughout. In the following description, for purposes of explanation, numerous specific details are set forth in order to provide a thorough understanding of the present invention. It may be evident, however, that the present invention may be practiced without these specific details. In other instances, well-known structures and devices are shown in block diagram form in order to facilitate describing the present invention.

[0021] As used in this application, the terms "component" and "system" are intended to refer to a computer-related entity, either hardware, a combination of hardware and software, software, or software in execution. For example, a component may be, but is not limited to being, a process running on a processor, a processor, an object, an executable, a thread of execution, a program, and/or a computer. By way of illustration, both an application running on a server and the server can be a component. One or more components may reside within a process and/or thread of execution and a component may be localized on one computer and/or distributed between two or more computers.

[0022] As used herein, the term "inference" refers generally to the process of reasoning about or inferring states of the system, environment, and/or user from a set of observations as captured *via* events and/or data. Inference can be employed to identify a specific context or action, or can generate a probability distribution over states, for example. The inference can be probabilistic-that is, the computation of a probability distribution over states of interest based on a consideration of data and events. Inference can also refer to techniques employed for composing higher-level events from a set of events and/or data. Such inference results in the construction of new events or actions from a set of observed events and/or stored event data, whether or not the events are correlated in close temporal proximity, and whether the events and data come from one or several event and data sources.

[0023] The disclosed calibration architecture supports the premise that calibration efforts can be significantly reduced with only a minor reduction in spatial accuracy. This effectively diminishes one of the most daunting practical barriers to wider adoption of an IEEE 802.11 location-based measurement technique.

[0024] Referring now to FIG. 1, there is illustrated geometry of the calibration procedure for a system of the present invention that determines new location(s) based on signal characteristics. These new location(s) are expected to be within a region 100. Region 100 may be a building, a floor of a building, or any other region that has coverage by one or more transmitters 110. The transmitters 110 may be located internal and external to the region 100. In order for the location system to be able to determine at least an (x,y) location, there must be at least three transmitters 1 10 whose signal characteristics can be measured in the region 100. These transmitters 110 may be, but are not required to be, for example, access point (AP) transceivers disposed on a network. However, for purposes of this description, the phrase "transmitting device" and the term "transmitter(s)" should be understood to include any device that may or may not be disposed on a network and that transmits a signal.

[0025] Region 100 is divided into sections 120, which sections 120 may include, for example, rooms, hallways, or lounges in a building, and thus may be of variable size. Alternatively, the sections 120 may be particular locations within rooms. The transmitters 110 are not necessarily located in the sections 120. Furthermore, there can be additional areas of region 100 that are not divided into sections 120.

[0026] The sections 120 may contain one or more calibration points 130. During calibration, a receiver 140 is placed sequentially at every calibration point 130. For each calibration point 130, one or more signal characteristics of every receivable transmitter 110 are recorded. In one embodiment, the transmitters 110 are transceivers that are compliant with an IEEE 802.11 standard and the signal characteristics are the signal strengths of the transmitters 110, measured at the calibration point 130. Also, for each calibration point 130, the identity of the corresponding section 120 is recorded. The identity of the corresponding section 120 can be indicated, for example, by a user selecting a section from a map. The spatial location of all sections 120 are also required for calibration. These spatial locations can be the centroid of the spatial extent of each section 120.

[0027] In another embodiment, there is only one calibration point 130 for each section 120. The calibration point 130 is located at a known location inside each section 120. The signal characteristics are then measured multiple times, while the receiver 140 is rotated in place at the single calibration point 130. The spatial location of section 120 is taken to be the spatial location of the calibration point 130.

[0028] In yet another embodiment, there are multiple calibration points 130 for each section 120. These calibration points 130 are chosen to be scattered throughout the section 120. The signal characteristics may be measured one

235

or more times for each calibration point 130. The spatial location of section 120 is taken to be the centroid of the section 120.

[0029] With any of the embodiments, the signal characteristics are measured by receiver 140 at all calibration points 130 and the spatial locations from all sections 120 are gathered, at act 150. Regression is then performed upon this data, at act 160. Regression operates on the gathered data to produce a regression function, as indicated at an act 170, which can be used subsequently to estimate new location(s) throughout the region 100 based on newly measured signal characteristics. These new location(s) are not constrained to lie on the calibration points 130. Indeed, they are not even constrained to lie within sections 120; they can occur at locations that are inaccessible at the time of calibration.

[0030] Referring now to FIG. 2, there is illustrated a flow diagram of a general calibration process in accordance with the present invention. While, for purposes of simplicity of explanation, the methodology of FIG. 2, and any subsequent methodologies in, e.g., the form of flow charts, are shown and described herein as a series of acts, it is to be understood and appreciated that the present invention is not limited by the order of acts, as some acts may, in accordance with the present invention, occur in different orders and/or concurrently with other acts from that shown and described herein. For example, those skilled in the art will understand and appreciate that a methodology could alternatively be represented as a series of interrelated states or events, such as in a state diagram. Moreover, not all illustrated acts may be required to implement a methodology in accordance with the present invention.

[0031] At 200, the receiver is brought to a calibration point 130. At 202, the spatial location of the receiver is then recorded. Note that recording of the spatial location information need not be performed at each calibration point, but may be recorded only once during calibration of a section 120. The receiver then measures and records signal strengths of one or more transmitters of the location, as indicated at 204. At 206, if the signal strengths at more calibration points 130 must be measured, flow returns to 200 to bring the receiver to that next calibration point 130, and continue the measurement and recording process for that calibration point 130. If no other calibration point 130 must be measured, flow proceeds from 206 to 208, to create a regression function. This regression function is trained via regression. The training set comprises the signal strengths measured at calibration points 130 and the spatial locations of sections 120. The regression function is then determined that provides position in (x,y) coordinates as a function of signal strengths over the entire region 100. Alternatively, the regression function may provide (x,y,z) coordinates, if the region 100 extends over multiple floors of a building.

[0032] Referring now to FIG. 3 there is illustrated a flow diagram of a process for determining new location(s). At 300, a receiver is brought to a general area of the new location. This location may be one that was previously visited or a location that is being visited for the first time. Signal strengths are then measured and recorded, as indicated at 302. The signals may be received from any transmitters associated with region 100. At 304, the regression function is employed to estimate new location(s) within region 100, based on the signal strengths measured by the receiver at 302. The process then reaches a Stop block.

THE ALGORITHM

[0033] Referring now to FIG. 4, there is illustrated a more detailed flow diagram of the process for determining mapping from signal strengths to (x,y) location in accordance with the present invention. At 400, signal strength vectors from every section 120 are clustered into K clusters. At 402, all signal strength vectors are separated into a training set and a test set of vectors. At 404, an untried value of sigma (σ) is chosen. At 406, a kernel matrix is created from the training set. At 408, the linear system is solved for coefficients of alpha (α) and beta (β). At 410, the values of sigma (σ), alpha (α), and beta (β) are saved. At 412, sigma (σ), alpha (α), and beta (β) are evaluated on the test set utilizing Equations (2) and (3). At 414, it is determined if the last sigma (σ) has been reached. If NO, flow proceeds back to the input of 404 to choose another untried sigma (σ). If YES, flow is to 416 to save the best sigma (σ), alpha (α), and beta (β).

[0034] Following is a detailed description of the algorithm and associated equations.

[0035] In order to facilitate understanding of the mathematics discussed *infra*, each set of calibration signal strength readings is designated with a vector $\mathbf{s}_i$, where i indexes over substantially all calibration vectors in substantially all the room locations. Each calibration vector has a corresponding (x_i, y_i) giving the location from which it was taken. This may be the centroid of the spatial extent of section 120 or wherever the receiver is placed. Each signal strength vector $\mathbf{s}_i$ has a plurality of elements, one element for each transmitter receivable in region 100. The elements in $\mathbf{s}_i$ corresponding to transmitters that were not sensed at the calibration point 130 were given a value of one less than the minimum signal strength seen for the whole experiment. The signal strengths are returned from a WRAPI (Wireless Research Application Programming Interface) library as integers in units of dBm, where dBm = 10 $\log_{10}$ (milliwatts).

[0036] Many conventional IEEE 802.11-based location studies have formulated the task of location measurement as a classification problem, where the goal is to classify the signal strength vector into a discrete set of locations. This includes the probabilistic formulations where the classification result is given as a set of probabilities over all the possible locations. However, the classification formulation is unsuitable for a goal of completely skipping certain rooms during the calibration phase. If a trained classifier has never seen a certain room, it will not ever classify data as coming from

236

that room.

[0037] Instead, the present invention uses regression to form the regression function that maps signal strength vector (s) into locations. Thus, the present invention can map a signal strength vector into a new location that has never been calibrated. If classification (rather than regression) is still desired, a post-processing check can be made to determine which room, if any, contains the estimated location.

[0038] Following is a description of how the signal strengths measured in accordance with the embodiments of FIG. 1 are used to generate the regression function that gives location as a function of the signal strength vector, after which the number of calibration vectors is reduced in a principled way to see how reducing the amount of calibration data affects the accuracy of location measurement.

[0039] Regression fits a function to the calibration vectors $\mathbf{s}_i$ and the corresponding room coordinates (x_i, y_i). The present invention utilizes kernel regression, which estimates new location(s) via the formula

$$x(\mathbf{s}) = c_x + \sum_{j=0}^{M-1} \alpha_j K\left(\left\|\mathbf{s} - \mathbf{s}_j^*\right\|\right), \text{ and}$$
$$y(\mathbf{s}) = c_y + \sum_{j=0}^{M-1} \beta_j K\left(\left\|\mathbf{s} - \mathbf{s}_j^*\right\|\right); \qquad (1)$$

where $K(r)$ is a chosen kernel function, S^*_j are the chosen kernel function centers, and α_j and β_j are the computed weights based on calibration data. The Euclidean distance r between an observed signal strength vector $\mathbf{s}$ and a stored signal strength vector $\mathbf{s}^*_j$ is shown by $\|\mathbf{s} - \mathbf{s}^*_j\|$. The offset (c_x, c_y) can be computed in a number of ways, as is known in the art of machine learning. In one embodiment, the offset is simply the centroid of the training data, *i.e.*,

$$(c_x, c_y) = \frac{1}{N}\left(\sum_{i=0}^{N-1} x_i, \sum_{i=0}^{N-1} y_i\right); \qquad (2)$$

where N is the number of calibration vectors (in the application provided herein, the number is 28,114).

[0040] In the embodiment of FIG. 1, the kernel function is chosen to be an isotropic Gaussian kernel function:

$$K(r) = \exp\left(-\frac{r^2}{2\sigma^2}\right). \qquad (3)$$

where σ is the radius, and r is the Euclidean distance $\|\mathbf{s} - \mathbf{s}^*_j\|$.

[0041] This choice of kernel function also requires a choice of scale parameter sigma (σ), which is described below. Additionally, the choice of the M kernel centers $\mathbf{s}^*_j$ is also described below.

[0042] The present invention uses a least-squares fit to compute the weights α_j and β_j based on the calibration data. To compute the α_j (for the x coordinate), the squared error is minimized between the calibration data and $x(\mathbf{s}_i)$, which is,

$$err = \sum_{i=0}^{N-1}\left(x_i - c_x - \sum_{j=0}^{M-1} \alpha_j K_{ij}\right)^2, \qquad (4)$$

where

$$K_{ij} = K\left(\left\|\mathbf{s}_i - \mathbf{s}_j^*\right\|\right).$$

Minimizing with respect to α_j gives a linear equation that can be solved for the vector $\mathbf{a} = (\alpha_0, \alpha_1, \ldots, \alpha_{M-2}, \alpha_{M-1})^T$:

$$K^T K a = K^T X \tag{5}$$

Here K is an N x M matrix of K_{ij}, and $\mathbf{x} = (x_0 - C_x, x_1 - C_x, \ldots, x_{N-2} - c_x, x_{N-1} - c_x)^T$. Analogously, β_j is obtained from $K^T K\beta = K^T\mathbf{y}$.

[0043] Note that $K^T K$ has size M x M, where M is a chosen number of stored signal strength vectors. $K^T K$ is a kernel matrix. One possible choice is to let each calibration point $\mathbf{s}_i$ serve as a stored signal strength vectors, giving $M = N$. Solving Equation (5) with M larger than 27,000 (as is used in the embodiment of FIG. 1) would be extremely computationally intensive. In addition, the regression function produced when $M = N$ may not smoothly generalize between calibration points 130. Instead, the signal strength calibration vectors were clustered in each location, and the cluster centers were used as kernel centers. Using a standard k-means algorithm, computing $k = 5$ signal strength clusters in each room, results in less than 700 kernel centers to represent all 118 rooms on the test floor.

[0044] If the uncertainty of the location of calibration points 130 is known, each term in Equation (4) may be weighted by the inverse of the variance of the uncertainty for its corresponding calibration point. In the art, this is known as heteroscedastic regression.

[0045] The only remaining choice was for the scale parameter σ. A simple linear search was performed over possible values of σ. For each candidate σ, the weights a and β were computed first using 70% of the calibration data. The candidates were evaluated using the remaining disjoint 30%. The system picked the σ that gave the least rms distance error in (x,y). In spite of the 70/30 split for computing σ, 100% of the calibration data was used to cluster for the kernel centers.

[0046] As previously indicated, an optional step is to average together the results of the last several locations to reduce noise. The last ten (x,y) results were averaged together.

[0047] As mentioned previously, a second set of test vectors were taken a few days separated from the training data. Using the embodiment where one calibration point 130 is taken per section 120, the second set numbered 25,457 readings to serve as test data. When testing this data, the kernel regression method yielded an rms error of approximately 3.75 meters. Computation of the rms error is known in the art, and thus not shown here.

APPLICATION EXAMPLES

[0048] As indicated above, the location algorithm of the present invention works based on regression of signal strength training data taken from known room locations.

[0049] Referring now to FIG. 5, there is illustrated a layout of a typical office floor 500 of rooms 502 utilized for a sample application of the calibration process of the present invention. The floor 500 includes 132 rooms 502 of which 118 were accessible. The area of the floor 500 is approximately 2,680 square meters. The floor was taken to be region 100. The building maps of the floors were extracted both as polygon representations and bitmaps. The coordinates of all maps were expressed in actual floor coordinates in meters. The algorithm was evaluated on the one floor 500 with the 118 different rooms.

[0050] To study the problem of calibration effort, the amount of calibration data was reduced as if less time was spent in each room and as if certain rooms had been skipped. The 118 rooms were split into 137 sections, since in larger rooms, e.g., conference rooms, more receiver locations were used. The receiver locations were noted by making the location selection utilizing the map via the interface of FIG. 6, described hereinbelow. The results indicated a calibration location for every 19.5 square meters. For calibration, each accessible section was entered with a wirelessly connected receiver, *e.g.*, the portable PC, running the logging program. The logging program used the WRAPI interface to obtain signal strengths from all the visible IEEE 802.11 transmitters. The receiver measured signals for approximately sixty seconds in each location. Additionally, the receiver was oriented in a number of different ways to factor out orientation effects. A scan rate of 3.4 Hz was used providing approximately 200 scans for each location. Each scan yielded the set of signal strengths and the MAC (Media Access Controller) addresses of the wireless access points. On average, the wireless communication interface could "see" 3.9 AP's at any given time. As previously indicated, the first set of signal strength readings numbered 27,796, and the second set, taken a few days later to serve as test data, numbered

25,457.

[0051] As a way of reducing noise and increasing accuracy, a running average filter was applied to the computed location vectors. The filter was ten samples long, which induced a delay of approximately 2.9 seconds at the scan rate of 3.4 Hz.

[0052] To test the effect of reduced time, the first *s* seconds of calibration data were processed with the same training algorithm, and then tested with the entire test set. Accuracy does not suffer significantly even when the time spent in each location is only ten seconds. At ten seconds, the rms error had only increased by approximately 12% (or 0.45 meters) from the rms error at sixty seconds. At a data rate of 3.4 Hz, ten seconds of data yielded only thirty-four signal strength vectors. This indicates that it is not necessary to spend much time at each location during calibration.

[0053] The effect of reducing the number of calibration locations from the original full set of 137 locations down to 10% of the original was tested. To choose k locations from the original calibration set, a k-means clustering algorithm was run on the original locations to make *k* clusters. The *k* original locations nearest the *k* cluster centroids were chosen as those for calibration. As determined, the rms error grows as the number of locations decreases. However, even at 50%, the rms error has only grown by 20% (0.74 meters), and at 20%, has grown by 42% (1.59 meters). At 10% of the original locations, the rms error is 9.19 meters, which is an increase of 145% (5.44 meters) over the best result at 100%. Therefore, this shows that there is a significantly diminishing return for moving to a denser set of calibration points. This experiment also suggests a way to choose calibration points in a space by starting with a dense set, for example, at the centroid of every room, and use k-means to cluster the set into a representative sub-sample.

[0054] Furthermore, both the time spent at each location and the number of locations can be significantly reduced with only a minor degradation in accuracy. For example, spending thirty seconds in 40% of the locations increases the rms error by only approximately 21 % (from 3.75 meters to 4.55 meters), yet reduces the calibration effort by much more than half.

[0055] Referring now to FIG. 6, there is illustrated an exemplary screenshot of a graphical user interface (GUI) 600 for facilitating signal strength logging of the calibration data. The GUI 600 facilitates the display of a floor graphical representation 602 of the floor 500, and rooms thereof. The user indicates the location of the receiver by selecting a room from the floor representation 602 via a mouse, keyboard, or other conventional input device. Additionally, there is presented a signal strength subwindow 604 for presenting a signal strength indicator plot 605 that displays a representation of the measured signal strengths from nearby transmitters. For example, a first bar 606 includes a first color or fill pattern that indicates the signal was received from a transmitter on the current floor being calibrated. Associated with the bar 606 is data 608 that indicates the signal strength data, the floor on which the room is located, and the room number of the transmitter (i.e., 113/3/3327). In this particular example, the transmitter was in building number (113), room number 3327 (also denoted graphically at 610) of the third floor (3).

[0056] A second bar identification 612 may be used to indicate measurements received from transmitters on floors other than the current floor being calibrated. The bar 612 is associated with room 113/4/4327, which is a room 4327 on the fourth floor of building 113. It is to be appreciated that the GUI can be programmed to provide a wide variety of graphical responses to measure signals, including flashing bars, and text, audio output signals, etc., commonly available for providing such interface features.

[0057] The interface 600 also includes a Location Input subwindow 614 that allows the user to zoom in on a floor map via a Map Zoom subwindow, and choose a floor for calibration via a Floor Chooser subwindow.

[0058] The interface 600 further includes a Scan Control subwindow 616 for selecting the scan rate (in Hertz) for signal detection. The user can also direct logging of the data to a location on the receiving device via a Logging path field 618. The user may also select a remote network storage location by entering the corresponding network path in the path filed 618. Once entered, all data is automatically stored in the designated file location.

[0059] At first glance, an rms error of approximately 3.75 meters for the location system seems much worse than previous conventional studies obtaining a median error of approximately 2.94 meters in a first conventional experiment or approximately one meter for a second conventional experiment. However, both of these conventional systems required much more calibration effort. The first conventional experiment covered hallway outside of about fifty-four rooms with seventy calibration points. The second conventional experiment covered the hallway with calibration points approximately 1.5 meters (five feet) apart. In contrast, the disclosed examples used one calibration point per room on rooms with an average center-to-center spacing of approximately 2.85 meters. The other efforts also took much more care in making sure the locations of the calibration points were known. While the above first and second conventional experiments show what is achievable with a careful calibration, the disclosed methodology illustrates what is achievable with a practical one.

[0060] One barrier to deploying an IEEE 802.11-based location system is the calibration effort. In the disclosed example, approximately four hours were spent calibrating 118 rooms on one floor of the building. It is desirable to know if this amount of calibration is really necessary. In particular, it is desirable to evaluate the effect of reducing the time spent in each room and reducing the number of rooms visited. By training on subsets of the original training data, the effects of reducing the time and number of rooms was simulated.

[0061] In summary, calibration for IEEE 802.11-based location can be very tedious. In the disclosed application example, one floor of an office building was calibrated down to room resolution, which approximates what could be expected for a large-scale deployment of an IEEE 802.11 location system. Using radial basis functions to interpolate location as a function of signal strength, an rms error of approximately 3.75 meters was achieved on rooms whose mean spacing was approximately 3.27 meters. By formulating the problem as one of interpolation, it is possible to make the calibration process easier by skipping a significant fraction of the rooms. Additionally, it is unnecessary to spend much time in each room, as more time beyond a short minimum does not improve accuracy very much.

[0062] In an alternative implementation, instead of measuring the strength of multiple transmitters from a single receiver at various calibration locations, the disclosed invention is equally applicable to determining the location of a transmitter by fixing a number of receivers at known locations and measuring the strength of a single transmitter at various calibration locations. The latter would be applicable to the case where the transmitter is a source of audio (*e. g.*, a human), while the receiver is a set of audio microphones.

[0063] In a further alternative embodiment, calibration and regression need not operate on signal strength. Various signal properties can be used, such as phase, autocorrelation, or spectrum. Regression can apply equally well to these alternative signal properties, even if each property itself is not a scalar. The input to a kernel regression system would then consist of a vector that comprises multiple vectors of signal properties, appended together.

[0064] Referring now to FIG. 7, there is illustrated a block diagram of a computer operable to execute the disclosed architecture. In order to provide additional context for various aspects of the present invention, FIG. 7 and the following discussion are intended to provide a brief, general description of a suitable computing environment 700 in which the various aspects of the present invention may be implemented. While the invention has been described above in the general context of computer-executable instructions that may run on one or more computers, those skilled in the art will recognize that the invention also may be implemented in combination with other program modules and/or as a combination of hardware and software. Generally, program modules include routines, programs, components, data structures, etc., that perform particular tasks or implement particular abstract data types. Moreover, those skilled in the art will appreciate that the inventive methods may be practiced with other computer system configurations, including single-processor or multiprocessor computer systems, minicomputers, mainframe computers, as well as personal computers, hand-held computing devices, microprocessor-based or programmable consumer electronics, and the like, each of which may be operatively coupled to one or more associated devices. The illustrated aspects of the invention may also be practiced in distributed computing environments where certain tasks are performed by remote processing devices that are linked through a communications network. In a distributed computing environment, program modules may be located in both local and remote memory storage devices.

[0065] With reference again to FIG. 7, there is illustrated an exemplary environment 700 for implementing various aspects of the invention includes a computer 702, the computer 702 including a processing unit 704, a system memory 706 and a system bus 708. The system bus 708 couples system components including, but not limited to the system memory 706 to the processing unit 704. The processing unit 704 may be any of various commercially available processors. Dual microprocessors and other multi-processor architectures also can be employed as the processing unit 704.

[0066] The system bus 708 can be any of several types of bus structure including a memory bus or memory controller, a peripheral bus and a local bus using any of a variety of commercially available bus architectures. The system memory 706 includes read only memory (ROM) 710 and random access memory (RAM) 712. A basic input/output system (BIOS), containing the basic routines that help to transfer information between elements within the computer 702, such as during start-up, is stored in the ROM 710.

[0067] The computer 702 further includes a hard disk drive 714, a magnetic disk drive 716, (*e.g.*, to read from or write to a removable disk 718) and an optical disk drive 720, (*e.g.*, reading a CD-ROM disk 722 or to read from or write to other optical media). The hard disk drive 714, magnetic disk drive 716 and optical disk drive 720 can be connected to the system bus 708 by a hard disk drive interface 724, a magnetic disk drive interface 726 and an optical drive interface 728, respectively. The drives and their associated computer-readable media provide nonvolatile storage of data, data structures, computer-executable instructions, and so forth. For the computer 702, the drives and media accommodate the storage of broadcast programming in a suitable digital format. Although the description of computer-readable media above refers to a hard disk, a removable magnetic disk and a CD, it should be appreciated by those skilled in the art that other types of media which are readable by a computer, such as zip drives, magnetic cassettes, flash memory cards, digital video disks, cartridges, and the like, may also be used in the exemplary operating environment, and further that any such media may contain computer-executable instructions for performing the methods of the present invention.

[0068] A number of program modules can be stored in the drives and RAM 712, including an operating system 730, one or more application programs 732, other program modules 734 and program data 736. It is appreciated that the present invention can be implemented with various commercially available operating systems or combinations of operating systems.

[0069] A user can enter commands and information into the computer 702 through a keyboard 738 and a pointing

240

device, such as a mouse 740. Other input devices (not shown) may include a microphone, an IR remote control, a joystick, a game pad, a satellite dish, a scanner, or the like. These and other input devices are often connected to the processing unit 704 through a serial port interface 742 that is coupled to the system bus 708, but may be connected by other interfaces, such as a parallel port, a game port, a universal serial bus ("USB"), an IR interface, etc. A monitor 744 or other type of display device is also connected to the system bus 708 *via* an interface, such as a video adapter 746. In addition to the monitor 744, a computer typically includes other peripheral output devices (not shown), such as speakers, printers etc.

[0070] The computer 702 may operate in a networked environment using logical connections to one or more remote computers, such as a remote computer(s) 748. The remote computer(s) 748 may be a workstation, a server computer, a router, a personal computer, portable computer, microprocessor-based entertainment appliance, a peer device or other common network node, and typically includes many or all of the elements described relative to the computer 702, although, for purposes of brevity, only a memory storage device 750 is illustrated. The logical connections depicted include a local area network (LAN) 752 and a wide area network (WAN) 754. Such networking environments are commonplace in offices, enterprise-wide computer networks, intranets and the Internet.

[0071] When used in a LAN networking environment, the computer 702 is connected to the local area network 752 through a network interface or adapter 756. The adaptor 756 may facilitate wired or wireless communication to the LAN 752, which may also include a wireless access point disposed thereon for communicating with the wireless adaptor 756. When used in a WAN networking environment, the computer 702 typically includes a modem 758, or is connected to a communications server on the LAN, or has other means for establishing communications over the WAN 754, such as the Internet. The modem 758, which may be internal or external, is connected to the system bus 708 *via* the serial port interface 742. In a networked environment, program modules depicted relative to the computer 702, or portions thereof, may be stored in the remote memory storage device 750. It will be appreciated that the network connections shown are exemplary and other means of establishing a communications link between the computers may be used.

[0072] Referring now to FIG. 8, there is illustrated a schematic block diagram of an exemplary computing environment 800 in accordance with the present invention. The system 800 includes one or more client(s) 802. The client(s) 802 can be hardware and/or software (*e.g.*, threads, processes, computing devices). The client(s) 802 can house cookie (s) and/or associated contextual information by employing the present invention, for example. The system 800 also includes one or more server(s) 804. The server(s) 804 can also be hardware and/or software (*e.g.*, threads, processes, computing devices). The servers 804 can house threads to perform transformations by employing the present invention, for example. One possible communication between a client 802 and a server 804 may be in the form of a data packet adapted to be transmitted between two or more computer processes. The data packet may include a cookie and/or associated contextual information, for example. The system 800 includes a communication framework 806 that can be employed to facilitate communications between the client(s) 802 and the server(s) 804. Communications may be facilitated via a wired (including optical fiber) and/or wireless technology. The client(s) 802 are operably connected to one or more client data store(s) 808 that can be employed to store information local to the client(s) 802 (*e.g.*, cookie (s) and/or associated contextual information). Similarly, the server(s) 804 are operably connected to one or more server data store(s) 810 that can be employed to store information local to the servers 804.

[0073] What has been described above includes examples of the present invention. It is, of course, not possible to describe every conceivable combination of components or methodologies for purposes of describing the present invention, but one of ordinary skill in the art may recognize that many further combinations and permutations of the present invention are possible. Accordingly, the present invention is intended to embrace all such alterations, modifications and variations that fall within the spirit and scope of the appended claims. Furthermore, to the extent that the term "includes" is used in either the detailed description or the claims, such term is intended to be inclusive in a manner similar to the term "comprising" as "comprising" is interpreted when employed as a transitional word in a claim.

Claims

1. A method of calibrating a system used to determine new location(s) depending on observed signal properties, comprising:

   measuring signal properties related to identified locations; and
   generating a regression function based at least in part upon the signal properties, the function estimating new location(s) as a function of observed signal properties.

2. The method of claim 1, the regression function comprising a plurality of kernel functions, each kernel function computing the difference between a vector of observed signal properties and a vector of stored signal properties.

241

3. The method of claim 2, the kernel functions being isotropic Gaussian kernel functions.

4. The method of claim 2, the vectors of stored properties are computed by clustering a plurality of vectors of measured signal properties.

5. The method of claim 2, the regression function further comprising weights and a scale parameter such that each kernel function depends on the scale parameter, the scale parameter determined by further,

selecting a plurality of the scale parameter values;
for each scale parameter value, fitting the weights to a first subset of the signal properties using the scale parameter value;
evaluating the regression function using the fitted weights on a second subset of the signal properties, the second subset being disjoint from the first subset;
selecting a best scale parameter where the regression function obtains the least location error on the second subset of the signal properties; and
storing the best scale parameter and corresponding weights.

6. The method of claim 1, the regression function comprising weights, and the act of generating the regression function comprises fitting the regression function to the measured signal properties by adjusting the weights.

7. The method of claim 6, the weights adjusted according to a least-squares fitting procedure.

8. The method of claim 6, the weights adjusted by computing a kernel matrix.

9. The method of claim 6, the weights adjusted based upon an estimate of location uncertainty associated with each identified location.

10. The method of claim 6, the weights comprising a plurality of weights for computing an x location and a plurality of weights for computing a y location.

11. The method of claim 1, the regression function further comprises additional parameters that are computed from a centroid of the identified locations.

12. The method of claim 1, the signal properties are of wireless radio signals transmitted from wireless transceivers, and the signal properties comprise signal strengths.

13. The method of claim 12, the wireless transceivers operating in accordance with an IEEE 802.11 standard.

14. The method of claim 1, wherein a subset of the new location(s) are inaccessible at the time of calibration, the inaccessible locations including at least one of a room, a plurality of rooms distributed throughout a floor, and a plurality of rooms proximately located on a floor.

15. A method of calibrating a wireless device location measurement system, comprising:

accessing at least one wireless transmitting device;
logging signal strength data for each of wireless transmitting device; and
generating a regression function based upon the signal strength data, the regression function utilized to estimate new location(s).

16. The method of claim 15, the signal strength data logged from a plurality of different locations within range of the transmitting device.

17. A location system that observes signal properties to determine a new location(s), comprising:

means for measuring signal properties related to identified locations; and
means for generating a regression function based at least in part upon the signal properties, the function estimating new location(s) as a function of observed signal properties.

242

18. A location system that uses observed signal properties to determine new location(s), comprising:

a measuring component for measuring signal properties related to identified locations; and
a regression component for generating a regression function based at least in part upon the signal properties, the function estimating new location(s) based upon observed signal property data.

19. The system of claim 18, the regression function comprising a plurality of kernel functions, each kernel function computing the difference between a vector of observed signal properties and a vector of stored signal properties.

20. The system of claim 19, the kernel functions being isotropic Gaussian kernel functions.

21. The system of claim 19, wherein the vector of stored properties is computed by clustering a plurality of vectors of measured signal properties.

22. The system of claim 18, the regression function comprising weights, and the regression component comprising a fitting component for fitting the regression function to the measured signal properties by adjusting the weights.

23. The system of claim 22, the fitting component comprising a least-squares fitting component.

24. The system of claim 22, the fitting component comprising a component for computing a kernel matrix.

25. The system of claim 22, the fitting component receives as input an estimate of the location uncertainty associated with each identified location.

26. The system of claim 22, the weights comprising a plurality of weights for computing an x location and a plurality of weights for computing a y location.

27. The system of claim 22, the regression function further comprising additional parameters that are computed from the centroid of the identified locations.

28. The system of claim 19, the signals are wireless signals transmitted from wireless transceivers, and the signal properties comprise signal strengths.

29. The system of claim 28, the wireless transceivers operate in accordance with an IEEE 802.11 standard.

30. The system of claim 18, further comprising a subset of the new location(s) that are inaccessible at the time of calibration, the inaccessible locations including at least one of a room, a plurality of rooms distributed throughout a floor, and a plurality of rooms proximately location on a floor.

31. A computer implementing the system of claim 18.

32. A user interface for calibrating a system that observes signals properties to estimate new location(s), comprising:

a user input component for receiving user preference information associated with at least the location; and
a presentation component for presenting a representation of the signal properties and for facilitating input of user preference information.

33. The interface of claim 32, further comprising a floor layout of individual representations of the locations, wherein the location representations are selectable.

34. The interface of claim 32, further comprising a plotting capability for plotting the signal properties associated with the selected location and an unselected location.

35. The interface of claim 32, the user input component comprising at least one of:

means for selecting a building associated with the locations;
means for selecting a floor in the building;
means for selecting one of the locations; and

243

means for selecting a scan rate for sampling the signal properties.

36. The interface of claim 32, further comprising means to display a color and/or a pattern corresponding to a state of the user preference information.

37. A computer for calibrating a system that uses signal properties to estimate new location(s), comprising:

means for measuring the signal properties related to identified locations; and
means for regressing, the regressing means generating a regression function based at least in part on the measured signal properties, the regression function used to estimate new location(s).

38. The computer of claim 37, the means for regressing further comprising means for clustering the signal properties for use by the regression algorithm.

39. The computer of claim 37, the means for regressing further comprising means to separate the measured signal properties into a training set and a test set.

40. The computer of claim 37, the means for regressing further comprising means for generating a kernel matrix from the training set.

41. The computer of claim 37, the measured signal properties comprising signal strengths.

244

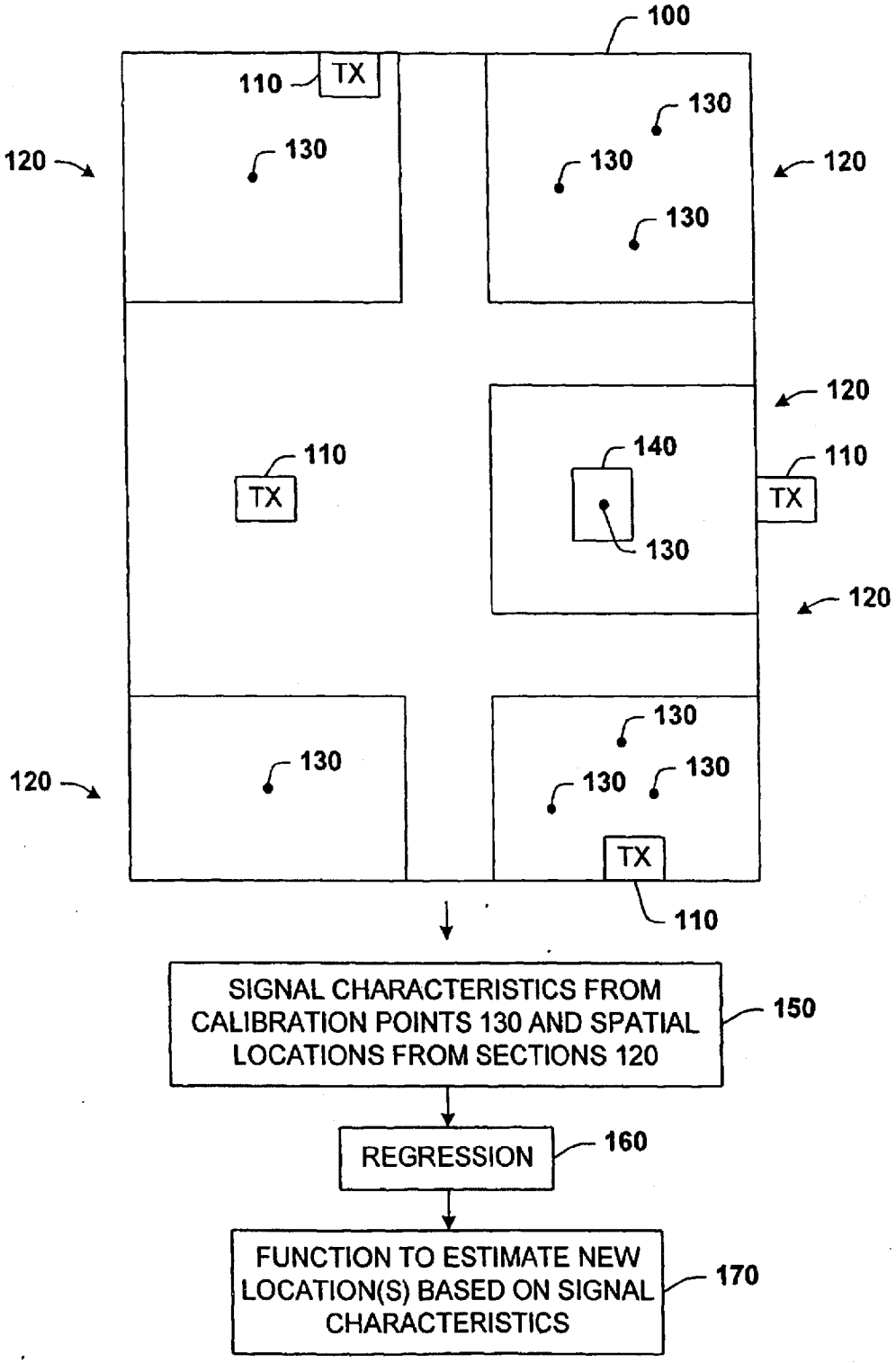
100
110
TX
130
120
140
SIGNAL CHARACTERISTICS FROM CALIBRATION POINTS 130 AND SPATIAL LOCATIONS FROM SECTIONS 120
150
REGRESSION
160
FUNCTION TO ESTIMATE NEW LOCATION(S) BASED ON SIGNAL CHARACTERISTICS
170

FIG. 1

245

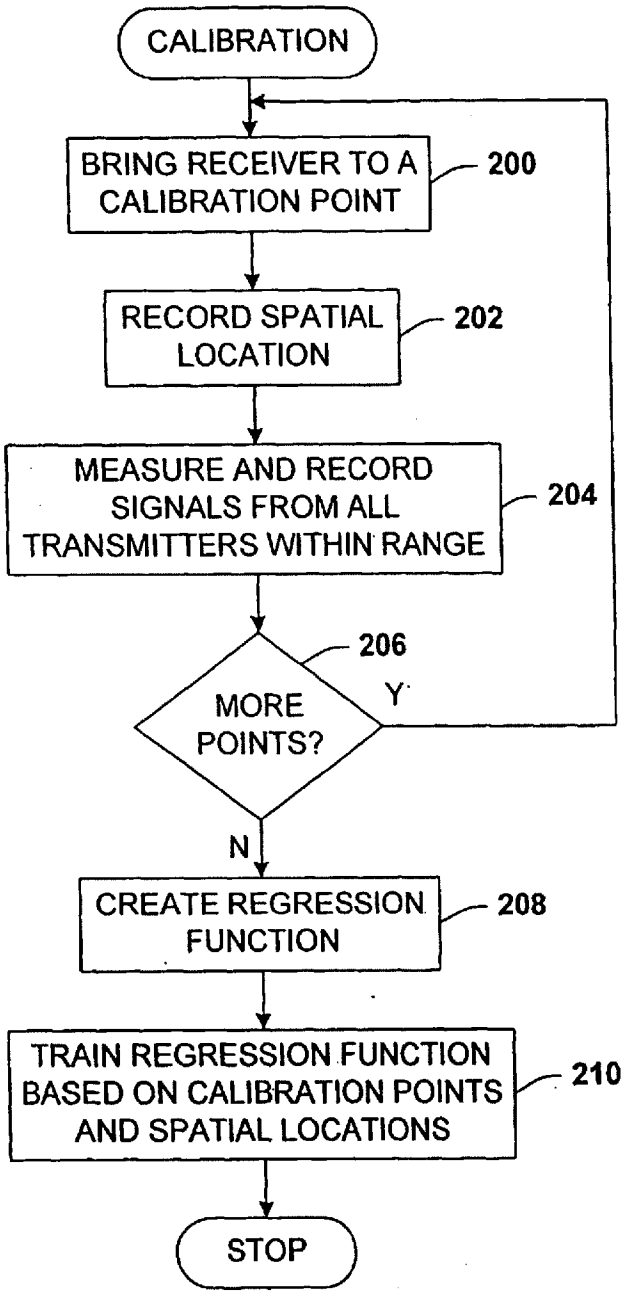
CALIBRATION
BRING RECEIVER TO A CALIBRATION POINT
200
RECORD SPATIAL LOCATION
202
MEASURE AND RECORD SIGNALS FROM ALL TRANSMITTERS WITHIN RANGE
204
206
MORE POINTS?
Y
N
CREATE REGRESSION FUNCTION
208
TRAIN REGRESSION FUNCTION BASED ON CALIBRATION POINTS AND SPATIAL LOCATIONS
210
STOP

FIG. 2

246

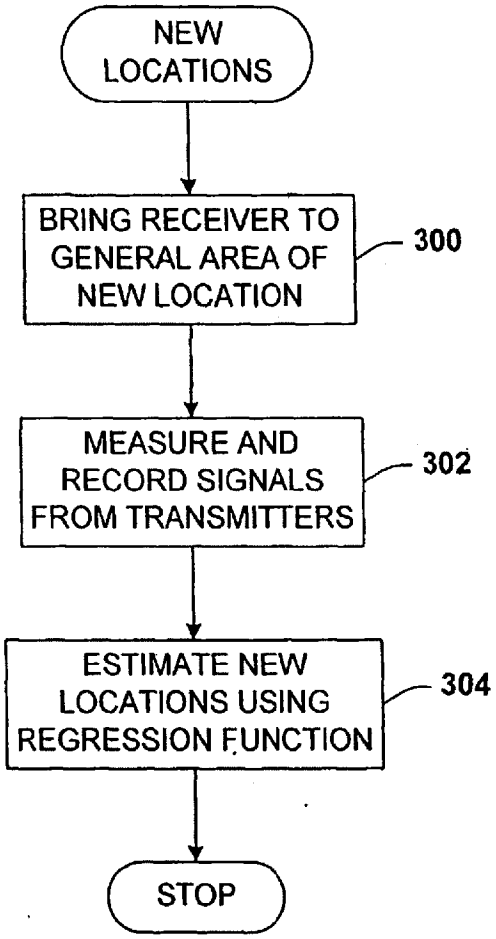
NEW LOCATIONS
BRING RECEIVER TO GENERAL AREA OF NEW LOCATION
300
MEASURE AND RECORD SIGNALS FROM TRANSMITTERS
302
ESTIMATE NEW LOCATIONS USING REGRESSION FUNCTION
304
STOP

FIG. 3

247

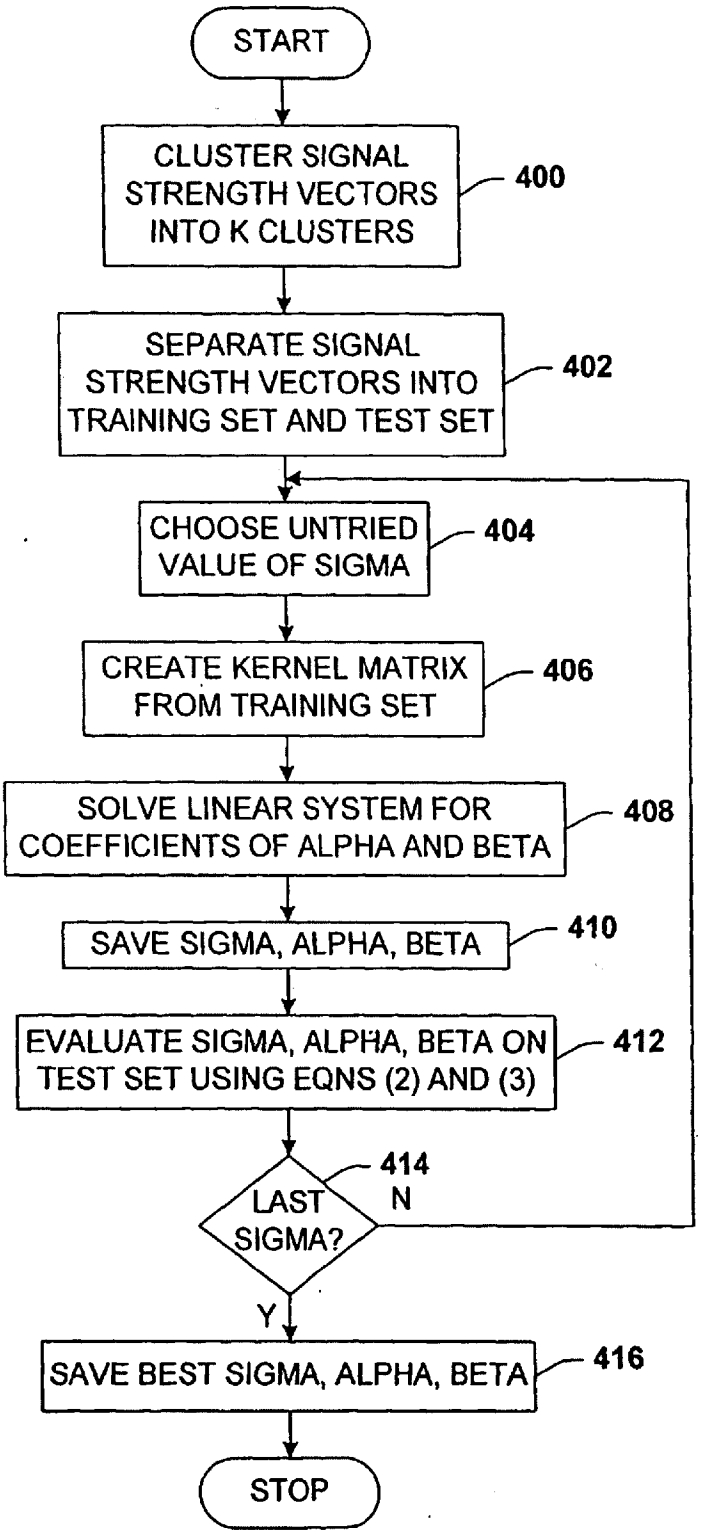
START
CLUSTER SIGNAL STRENGTH VECTORS INTO K CLUSTERS
400
SEPARATE SIGNAL STRENGTH VECTORS INTO TRAINING SET AND TEST SET
402
CHOOSE UNTRIED VALUE OF SIGMA
404
CREATE KERNEL MATRIX FROM TRAINING SET
406
SOLVE LINEAR SYSTEM FOR COEFFICIENTS OF ALPHA AND BETA
408
SAVE SIGMA, ALPHA, BETA
410
EVALUATE SIGMA, ALPHA, BETA ON TEST SET USING EQNS (2) AND (3)
412
LAST SIGMA?
414
N
Y
SAVE BEST SIGMA, ALPHA, BETA
416
STOP

FIG. 4

248

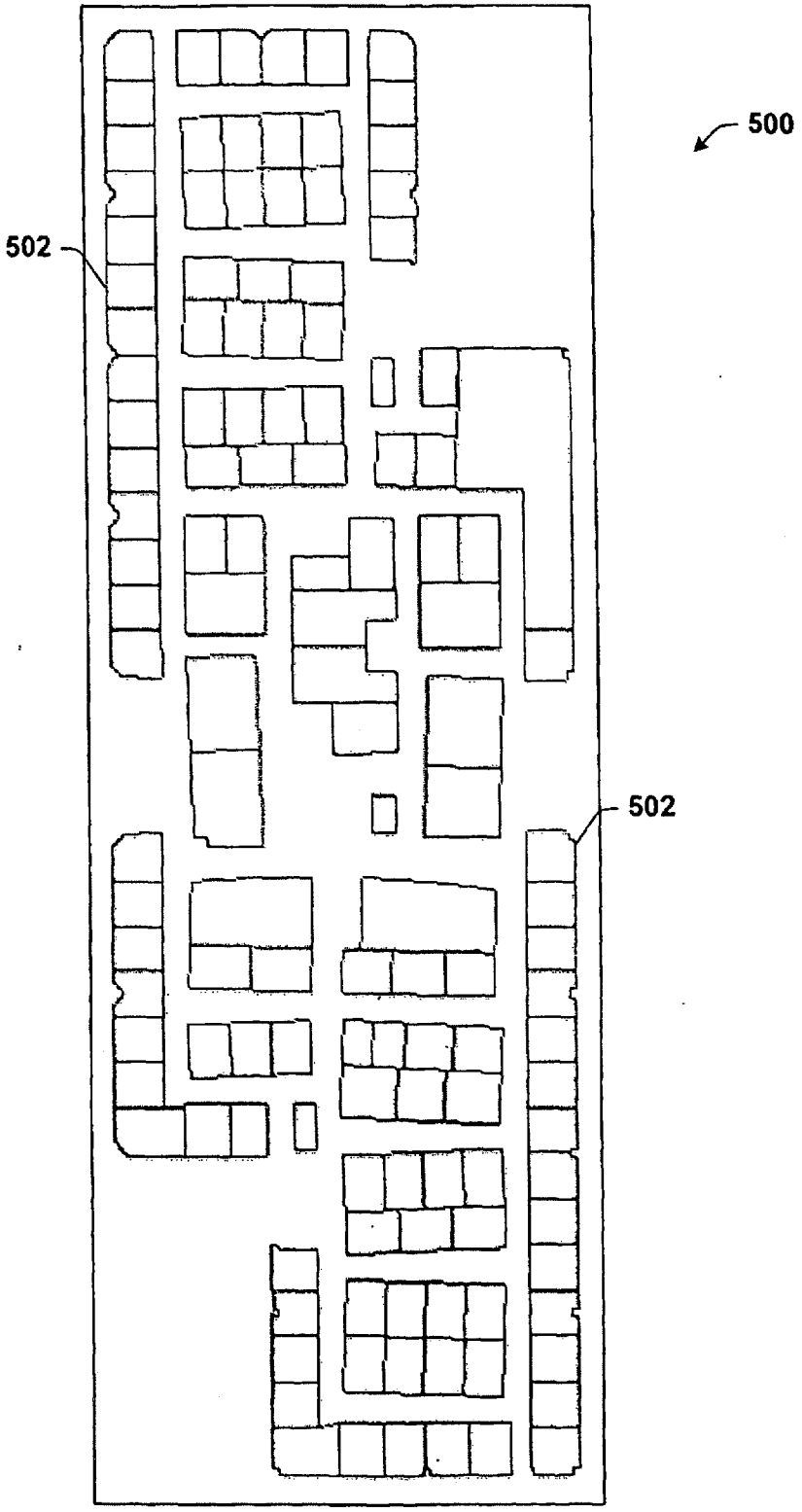

FIG. 5

249

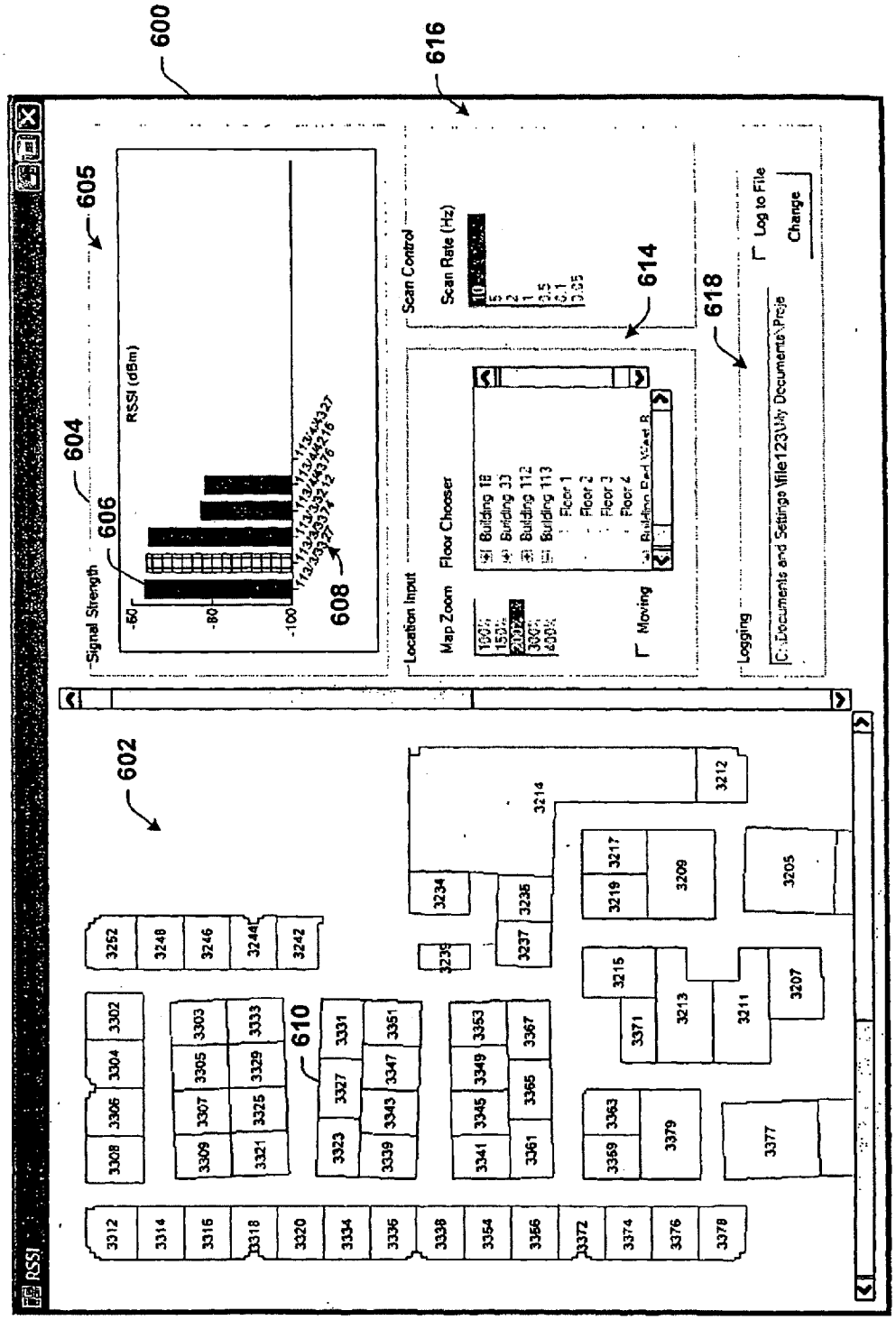
600
616
605
604
606
608
614
618
602
610
Signal Strength
RSSI (dBm)
-60
-80
-100
Scan Control
Scan Rate (Hz)
Location Input
Map Zoom
Floor Chooser
Building 18
Building 33
Building 112
Building 113
Floor 1
Floor 2
Floor 3
Moving
Logging
Log to File
Change
RSSI

FIG. 6

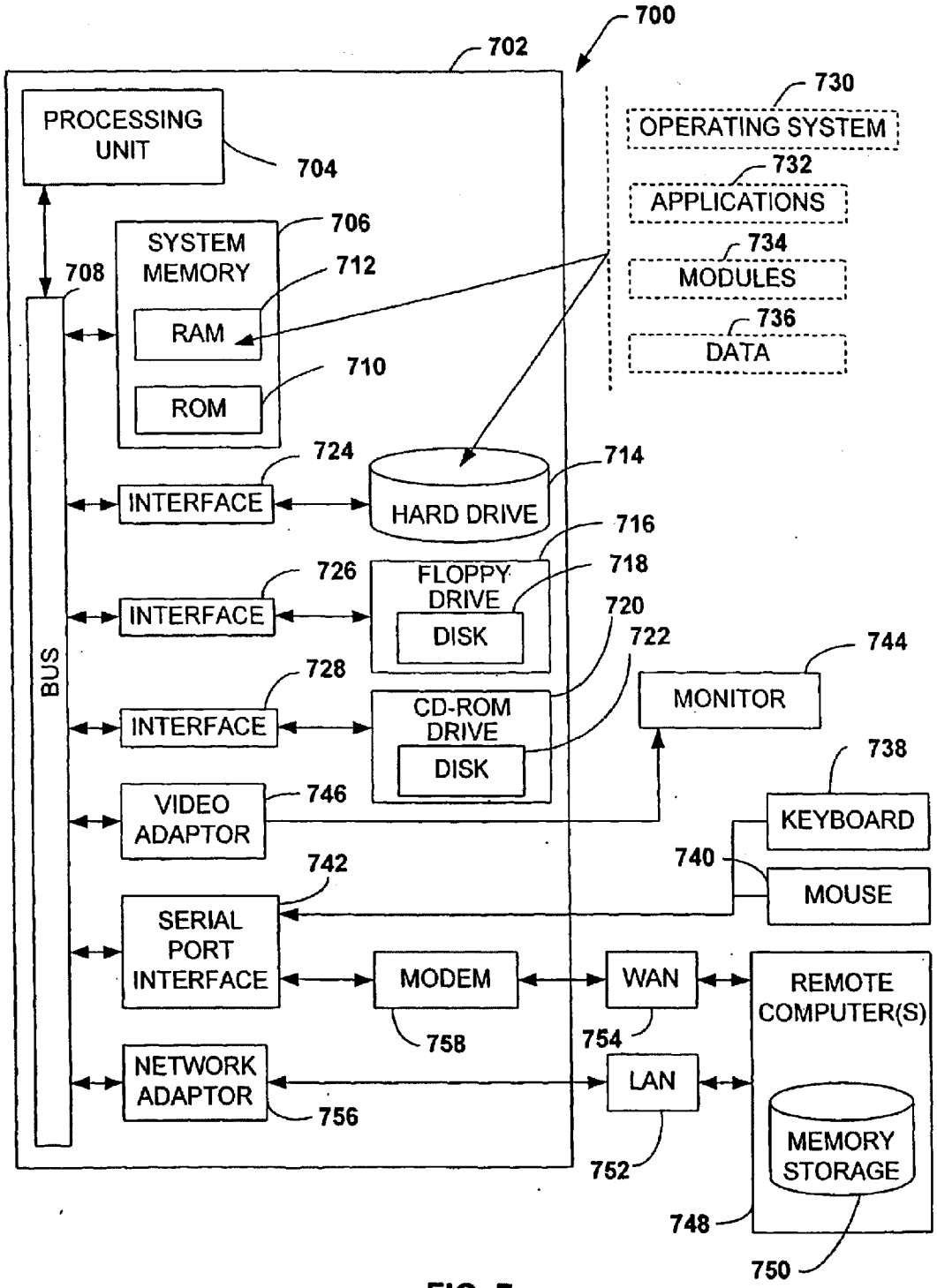
700
702
PROCESSING UNIT
704
SYSTEM MEMORY
706
708
712
RAM
710
ROM
BUS
730
OPERATING SYSTEM
732
APPLICATIONS
734
MODULES
736
DATA
724
INTERFACE
HARD DRIVE
714
716
726
INTERFACE
FLOPPY DRIVE
DISK
718
720
722
728
INTERFACE
CD-ROM DRIVE
DISK
744
MONITOR
738
VIDEO ADAPTOR
746
KEYBOARD
740
MOUSE
742
SERIAL PORT INTERFACE
MODEM
758
WAN
754
REMOTE COMPUTER(S)
NETWORK ADAPTOR
756
LAN
752
MEMORY STORAGE
748
750

FIG. 7

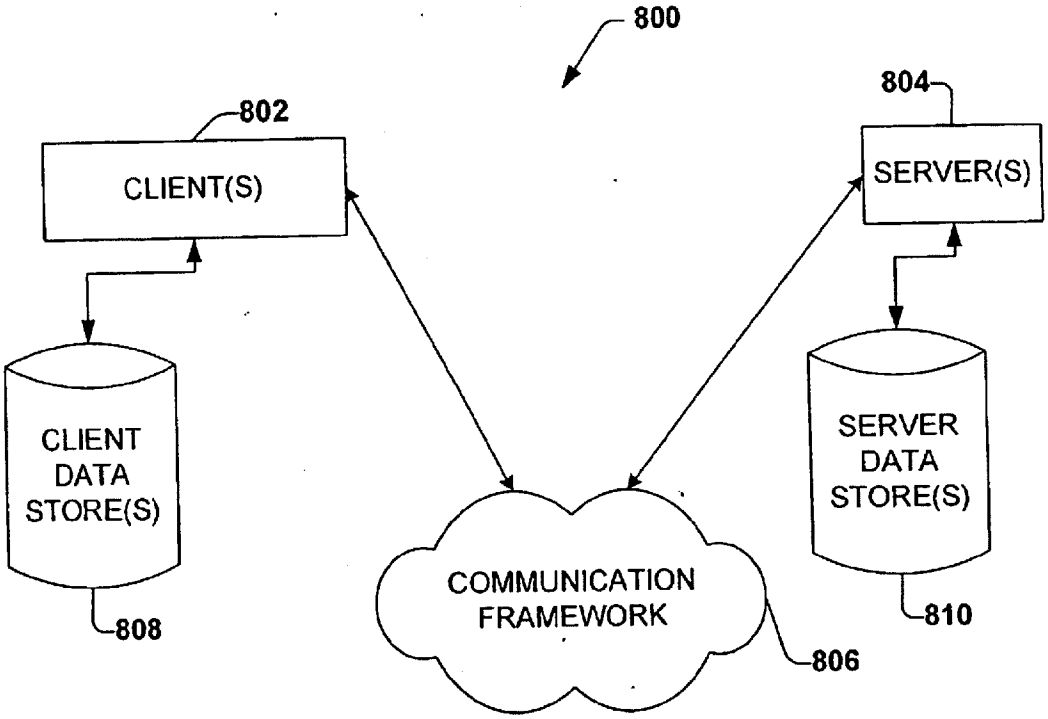
800
802
CLIENT(S)
804
SERVER(S)
CLIENT
DATA
STORE(S)
808
COMMUNICATION
FRAMEWORK
806
SERVER
DATA
STORE(S)
810

FIG. 8

252

(12) INTERNATIONAL APPLICATION PUBLISHED UNDER THE PATENT COOPERATION TREATY (PCT)

(19) World Intellectual Property Organization
International Bureau

(43) International Publication Date
17 October 2002 (17.10.2002)

PCT

(10) International Publication Number
WO 02/082832 A2

(51) International Patent Classification[7]: H04Q 7/00

(21) International Application Number: PCT/US02/10791

(22) International Filing Date: 3 April 2002 (03.04.2002)

(25) Filing Language: English

(26) Publication Language: English

(30) Priority Data:
60/281,147 3 April 2001 (03.04.2001) US

(71) Applicant *(for all designated States except US)*: **AT & T WIRELESS SERVICES, INC.** [US/US]; P.O. Box 97059, WTC2, Redmond, WA 98073-9759 (US).

(72) Inventors; and
(75) Inventors/Applicants *(for US only)*: **MACDONALD, Alan, D.** [US/US]; 5716 141st Place S.E., Bellevue, WA 98006 (US). **SATHER, Marc, W.** [US/US]; 27488 Jane Place, Kingston, WA 98346 (US). **SNAPP, John** [US/US]; 1706 111th Avenue N.E., Bellevue, WA 98004 (US).

(74) Agent: **JONES, Michael, D.**; Klarquist Sparkman, LLP, One World Trade Center, Suite 1600, 121 SW Salmon Street, Portland, OR 97204 (US).

(81) Designated States *(national)*: AE, AG, AL, AM, AT, AU, AZ, BA, BB, BG, BR, BY, BZ, CA, CH, CN, CO, CR, CU, CZ, DE, DK, DM, DZ, EC, EE, ES, FI, GB, GD, GE, GH, GM, HR, HU, ID, IL, IN, IS, JP, KE, KG, KP, KR, KZ, LC, LK, LR, LS, LT, LU, LV, MA, MD, MG, MK, MN, MW, MX, MZ, NO, NZ, OM, PH, PL, PT, RO, RU, SD, SE, SG, SI, SK, SL, TJ, TM, TN, TR, TT, TZ, UA, UG, US, UZ, VN, YU, ZA, ZM, ZW.

(84) Designated States *(regional)*: ARIPO patent (GH, GM, KE, LS, MW, MZ, SD, SL, SZ, TZ, UG, ZM, ZW), Eurasian patent (AM, AZ, BY, KG, KZ, MD, RU, TJ, TM), European patent (AT, BE, CH, CY, DE, DK, ES, FI, FR, GB, GR, IE, IT, LU, MC, NL, PT, SE, TR), OAPI patent (BF, BJ, CF, CG, CI, CM, GA, GN, GQ, GW, ML, MR, NE, SN, TD, TG).

[Continued on next page]

(54) Title: METHODS AND APPARATUS FOR MOBILE STATION LOCATION ESTIMATION

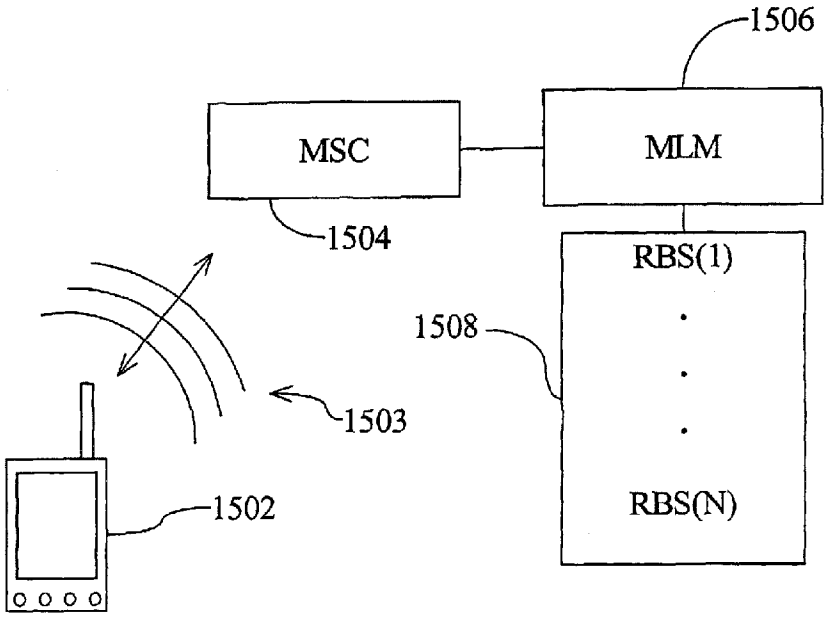

(57) Abstract: Methods and apparatus for estimating mobile station location include receiving reported signal strengths or other attachment indicator values from a mobile station. The reported signal strengths are compared with characteristic received signal strength values in a coverage area of a mobile network. A mobile switching center determines if a location function is requested and initiates a location estimation process by a mobile location module (MLM). The MLM receives the reported signal strength contours associated with the attachment points. Based on a comparison of the reported attachment indicator values with characteristic values, the MLM provides a mobile location estimate.

WO 02/082832 A2

Published:

— *without international search report and to be republished upon receipt of that report*

For two-letter codes and other abbreviations, refer to the "Guidance Notes on Codes and Abbreviations" appearing at the beginning of each regular issue of the PCT Gazette.

METHODS AND APPARATUS FOR MOBILE STATION LOCATION ESTIMATION

Cross Reference to Related Applications

This application claims the benefit of U.S. Provisional Patent Application 60/281,147, filed April 3, 2001.

Field of the Invention

The present invention relates to methods and apparatus for determining the location of a mobile station in a wireless network.

Background

Mobile telephone systems, also called cellular telephone systems, are becoming increasingly popular. These systems are generally made up of cell sites that are configured to serve an associated coverage area that is referred to as a cell. The cell site is a location within a cell at which communication hardware such as antenna(s) and radio base stations are installed. A mobile station operating within a particular cell in the system communicates with the mobile telephone system through the associated cell site. The cell sites are in communication with a mobile switching center that connects the mobile telephone system to a land-line telephone network.

One reason for the popularity of cell phones is that they can be used for emergencies. For example, a motorist could use the mobile telephone to call for assistance in case of a disabled vehicle. Many areas provide a special emergency cellular telephone number. In other areas, users can call 911, just as they would from a conventional land-line phone.

One of the problems with using the mobile telephone for emergencies stems from the mobility of the telephone. Public service providers, such as police, do not know the location of the mobile telephone calling the emergency number. In addition, users who call the emergency number often cannot provide enough location information to allow the public service provider to find them. Thus, it is

desirable to provide a mobile telephone system that can determine the location of a mobile telephone and provide that information to public service providers.

Such a mobile telephone location service would be desirable in other contexts besides emergency responses. For example, a mobile telephone user who is lost may request location information from the mobile telephone system provider. The location information could be passed to the user from the system. Yet another user for such a system would be companies which operate fleets of vehicles. A home base for company operations could keep track of the locations of its vehicles by using a mobile telephone location service. Of course there are many other applications for such a service.

In known techniques for mobile telephone location, the distance between a mobile telephone and a mobile telephone system antenna in a cell site can be determined by analyzing the signal strength of a communication signal between the cell site antenna and the mobile telephone. If the distance between the mobile telephone and a number of cell site antennas is calculated, the approximate location of the mobile telephone can be determined by a geometric process such as triangulation.

U.S. Patent 4,891,650, describes a vehicle location system which determines an approximate vehicle location using a cellular telephone system. The location function is initiated when a vehicle transmits an alarm signal to nearby cell sites. The cell sites receiving this alarm signal analyze the received alarm signal to determine its signal strength. The cell sites then send signal strength information through the mobile telephone system to an alarm central station. The alarm central station then uses the signal strengths reported from various cells to determine an approximate location of the vehicle. A more accurate location is achieved by sending out actual tracking vehicles to the approximate location calculated by the central station. A disadvantage of this system is that each of the cell sites requires additional components, which will generate and send an appropriate signal strength report message to a mobile telecommunications switching office. The mobile telecommunications switching office also needs special functionality to send appropriate information to a central tracking station that determines an approximate location of the vehicle using the signal strengths.

U.S. Patent 5,218,367 describes a vehicle tracking system which uses signal strengths received from nearby cells to calculate an approximate vehicle location. In this system, a special purpose mobile telephone determines signal strengths being received from a nearby cell and generates and sends an appropriate alarm message, including signal strength information, to a central station via the mobile telephone system. The central station then uses this information to determine an approximate location of the vehicle. The system can improve upon the accuracy of the approximate location if the cells are divided into sectors and particular information about the antennas in these sectors is used. Once an approximate location is found, a more accurate location is achieved by sending out actual tracking vehicles to the approximate location calculated by the central station.

A technique described in U.S. Patent 4,891,650 requires additional components in each of the cell sites in order to generate and send appropriate signal strength report messages. Since there are many such cells in a mobile telephone system, such additional components are undesirable. Thus, there is a need for mobile telephone location system, which does not require additional components at each cell site. Other methods are described in U.S. Patent 5,724,660 and U.S. Patent 5,732,354.

Some of the location techniques described in the above patents do not calculate an accurate location of the mobile telephone. The accuracy of the location is improved by sending out actual tracking vehicles. However, the need for such vehicles makes such techniques very expensive. Improved methods and apparatus for mobile station location estimation are needed.

Summary

Mobile station location methods include determining a geographical location based on reported signal strength (RSS) values reported by a mobile station. The RSS values are compared with sets of RSS values obtained by, for example, signal strength measurements or signal strength computations, and stored in a memory. According to representative examples, methods include establishing latitude or longitude coordinates with a global positioning system processor associated with the mobile station. Reported RSS values are compared with predetermined RSS values

associated with the latitude and longitude coordinates. In additional examples, the predetermined sets of RSS values are revised based on GPS location coordinates reported by the mobile station.

Mobile station location processors include an input configured to receive attachment indicators associated with at least two points of attachment of the mobile station. A memory is configured to store sets of predetermined attachment indicators associated with the at least two points of attachment, and an estimation unit is configured to provide an estimate of the mobile station location based on a comparison of the received attachment indicators and at least one set of the at least two predetermined attachment indicators. According to additional examples, the received attachment indicator values are reported by the mobile station. In other examples, the attachment indicator values are reported by one or more points of attachment. In a representative example, the attachment indicator values are received signal strength values reported by the mobile station.

Mobile location modules include a processor configured to compare at least two reported received signal strength values with at least two predetermined received signal strength values associated with at least two geographical locations in a wireless network. The mobile location modules also include an output configured to deliver a mobile location estimate based on the comparison. According to representative examples, the processor is configured to determine a score associated with the comparison of the reported received signal strength values with the predetermined received signal strength values. In additional examples, the reported and received signal strength values relate to mobile-assisted hand-off.

Location units for estimating a geographic location of a mobile station include an input configured to receive attachment indicator values associated with a mobile station, and a processor configured to provide a mobile station location estimate based on predetermined attachment indicator contours associated with network attachment points. According to representative examples, the attachment indicator values are received signal strength values reported by the mobile station and the attachment indicator contours are received signal strength contours.

Methods of locating a mobile station include obtaining a set of received signal strength values associated with the mobile station and determining a mobile

station location based on a comparison of the received signal strengths with characteristic signal strength values. In representative examples, the mobile station location is determined by selecting a location associated with the characteristic signal strength values associated with a selected error score. In other examples, the methods include storing the characteristic signal strength values and retrieving the characteristic values from a memory.

Methods of locating a mobile station within a geographic service area include obtaining attachment indicator values for the mobile station. The mobile station attachment indicator values are associated with a series of attachment points and are compared with characteristic attachment indicator values associated with the series of attachment points to obtain a mobile station location estimate. According to additional representative examples, the methods include reporting the estimated mobile station location. In other examples, the attachment indicator values for the mobile station are received signal strength values associated with corresponding radio base stations and reported by the mobile station. In representative examples, the mobile station attachment indicator values and the characteristic attachment indicator values are compared by determining scores, and the estimated mobile station location is selected based on the scores.

Methods of locating a mobile station include obtaining at least one of a latitude and a longitude location estimate based on a global positioning system. An estimate of mobile station location is provided based on a comparison of mobile station attachment indicator values with characteristic attachment indicator values in a region associated with the latitude and longitude estimates.

Methods of estimating a mobile station location include receiving signal strength values reported by a mobile station and associated with a plurality of antennas. A first location area of the mobile station is calculated as a geographic coverage area of a serving cell site and a second location area of the mobile station is calculated based on a comparison of the reported received signal strength values with predetermined signal strength values associated with at least one location in the geographic coverage area. According to representative examples, the predetermined signal strength values are represented as signal strength contours, and the mobile

station location estimate is based on associating one or more signal strength contours with the reported received signal strength values.

Characteristic attachment indicator values can be determined based on a propagation characteristic between a geographic location and a point of attachment. In representative examples, the propagation characteristic can be propagation path slope, antenna pattern roll-off, or other value.

Networks configured to provide location estimates for a mobile station include a mobile location module that receives attachment indicator values associated with points of attachment. The network includes a database that includes characteristic attachment indicator values for geographic locations in a network service area. A mobile location estimate is provided based on a comparison of the received attachment indicator values and the characteristic attachment indicator values. In some examples, the received attachment indicator values are received signal strength values reported from the mobile station. In additional examples, the comparison is based on a calculated score associated with the characteristic attachment indicator values and the received attachment indicator values. In other examples, the characteristic attachment indicator values are configured as attachment indicator value contours, and the mobile station location estimate is based on these contours.

Computer readable media are provided that contain computer-executable instructions for determining mobile station location estimates. The media include computer-executable instructions configured to compare reported attachment indicator values with characteristic attachment indicator values associated with corresponding geographic locations. In some examples, instructions for determining the characteristic values are provided.

Methods of providing mobile location information include determining a mobile location based on a comparison of reported attachment indicator values with characteristic attachment indicator values associated with respective geographic locations. In some examples, the mobile location is reported to a service provider, and, in additional examples, the mobile location determination is repeated based on updated reported attachment indicator values to obtain an updated mobile location that is reported to the service provider.

These and other features are set forth below with reference to the accompanying drawings.

BRIEF DESCRIPTION OF THE DRAWINGS

FIG. 1 illustrates a geographic service area of a wireless network.

FIG. 2 is a block diagram illustrating a mobile telephone system.

FIG. 3 shows an example mobile-assisted hand-off (MAHO) list that includes received signal strengths.

FIG. 4 illustrates a Hata propagation loss model.

FIG. 5 illustrates a location area as an intersection of circles, wherein radii of the circles are overestimates of mobile station distances.

FIG. 6 illustrates a location area as an intersection of circles, wherein radii of the circles are underestimates of mobile station distances.

FIG. 7 illustrates a location point as an intersection of circles, wherein radii of the circles are accurate estimates.

FIG. 8 illustrates a method of reducing error components of computed distances.

FIG. 9 is a graph of latitude and longitude coordinates calculated by a GPS receiver/processor over a time interval.

FIG. 10 is a block diagram of a method of calculating a location of a mobile station.

FIG. 11 is a schematic block diagram of a wireless communication system.

FIG. 12 is a schematic diagram of a division of a geographical service area into zones.

FIG. 13 is a schematic diagram of an alternative division of a geographical service area into zones.

FIG. 14 is a schematic block diagram of a mobile station location module.

FIG. 15 is a schematic block diagram of a wireless network that includes a mobile station location module.

FIG. 16 is a schematic diagram illustrating received signal strength contours based on received signal strength values associated with cells of a wireless network.

FIG. 17 is a schematic block diagram illustrating a wireless network configured to provide mobile station locations to a emergency services provider.

DETAILED DESCRIPTION

FIG. 1 shows the geographic serving area 100 of a mobile telephone system. The serving area 100 is shown having 7 hexagonal cells numbered 1-7. Cell 7 is shown in the center, surrounded by adjacent cells 1-6. The serving area 100 of a mobile telephone system would typically contain more than 7 cells, however, for ease of reference, only 7 cells are shown in FIG. 1. Each cell 1-7 contains an antenna 101-107 which is used to transmit signals to and receive signals from mobile telephones such as a mobile telephone 120 within the mobile telephone system serving area 100.

A mobile telephone system 200 is shown in FIG. 2. Cell 7 is shown containing antenna 107 connected to a radio base station (RBS) 214. The mobile telephone 120 shown within cell 7 communicates with the mobile telephone system 200 via an air interface 202. For example, the mobile telephone 120 can be a digital mobile telephone that operates according to a North American time division multiple access (TDMA) system according an IS-55 standard, and an air interface according to an IS-54 or IS-136 standard. See, for example, TIA/EIA Interim Standard IS-55-A "Recommended Minimum Performance Standards of 800 MHz Mode Mobile Stations," September 1993; EIA/TIA Interim Standard IS-54-B "Cellular System Dual-Mode Mobile Station–Basestation Compatibility Standard," April 1992; EIA/TIA Interim Standard IS-136 "Cellular System Dual-Mode Mobile Station-Basestation: Digital Control Channel Compatibility Standard," April 1995; which are incorporated by reference herein. In addition, a global positioning system (GPS) receiver/processor unit 125 can be provided in or otherwise associated with the mobile telephone 120 which is to be located. This use of the GPS receiver/processor 125 in the mobile telephone 120 will be described in further detail below. Cells 1-7 include respective antennas connected to associated radio base stations (RBS) that are in communication with the mobile switching center (MSC) 220.

The cells 1-7 are assigned a plurality of voice channels for transmitting and receiving voice signals and respective control channels for transmitting and receiving control data signals. Referring to FIGS. 1-2, consider mobile telephone 120, which is operating in cell 7. The mobile telephone 120 is communicating over the air interface 202 with the mobile telephone system 200 via antenna 107 and RBS 214. Voice signals are communicated between the mobile telephone 120 and the antenna 107 via one of the cell's voice channels, and control data signals are communicated between mobile telephone 120 and the antenna 107 via the cell's control channel. In such a situation, cell 7 is the serving cell since the voice data is being communicated through that cell. In addition to the communication with the serving cell, the mobile telephone 120 also monitors the control channels of nearby cells. The mobile telephone 120, for mobile-assisted hand-off in accordance with the IS-54 and IS-136 standards, measures the signal strengths of these control channels of nearby cells. These control channel signal strength measurements are sent to the MSC 220 as described in further detail below. In addition, the mobile telephone 120 measures the signal strength of the voice signal it is receiving from the serving cell site antenna. This voice channel signal strength measurement is periodically sent by the mobile telephone 12 to the MSC 220 via the serving cell's reverse voice channel.

As the mobile telephone 120 travels within the geographic serving area 100, the signal strength of the voice channel signal between the antenna 107 and the mobile telephone 120 will vary. As the mobile telephone 120 enters another cell such as, for example, adjacent cell 5, the signal strength of the control channel signal from antenna 105 will become stronger than the signal strength of the voice channel signal from antenna 107. At this point, it is desirable for the mobile telephone 120 to terminate communication over the voice channel with cell 7 and to initiate communication via a voice channel of cell 5. This operation is called hand-off, and is used to change the serving cell while the mobile telephone 120 is traveling within the geographic serving area 100 so that the mobile telephone 120 maintains voice channel communication via the antenna with the strongest signal.

In mobile telephones based on the IS-54 and IS 136 air protocols, this hand-off operation is assisted by the mobile telephone itself. Such a function is called

mobile-assisted hand-off (MAHO). The mobile telephone 120 maintains a MAHO list, which contains the signal strengths of the signals that the mobile telephone 120 is receiving over the control channels of nearby cells. Each cell site has a pre-defined MAHO list. The MSC 220 stores these MAHO lists for each cell site and sends the appropriate list to the mobile telephone 120, depending on the serving cell site. These defined MAHO lists generally consist of the cells adjacent to the serving cell. For example, assuming that cell 7 is the serving cell, an example MAHO list 300 is shown in FIG. 3. The list of channels to measure and to include in the MAHO list is communicated to the mobile telephone 120 by the MSC 220. The list 300 contains an entry for each of the adjacent cells 1-6 in this illustration, with a corresponding signal strength (RSSI) which represents the signal strengths of the control channels broadcast by cells 1-6 as received by mobile telephone 120. Thus, $RSSI_1$ represents the control channel signal strength being received by the mobile telephone 120 from the antenna 101 in cell 1; $RSSI_2$ represents the control channel signal strength being received by the mobile telephone 120 from the antenna 102 in cell 2; etc.

MAHO measurements are periodically sent from the mobile telephone 120 to the MSC 220 via the serving cell's reverse voice channel. The contents of the MAHO list are determined by the IS-54 standard, and thus all digital mobile telephones, which comply with this, air protocol will maintain a MAHO list.

It is often desirable to determine a specific geographic location of a mobile telephone such as the mobile telephone 120 within the geographic serving area 100. A mobile location module (MLM) 230 can be included in the mobile telephone system 200 to provide a mobile station location. The MLM 230 includes a processor 232 and a memory 234. The MLM 230 is connected to the MSC 220, and the location function of the MLM 230 can be initiated by the MSC 220 as follows.

Upon initiation of a telephone call by the mobile telephone 120, the RBS 214 sends the MSC 220 the telephone number of the mobile telephone (the A number) and the telephone number of the telephone being called by the mobile telephone (the B number). The MSC 220 can be configured to perform an A/B number analysis to determine whether a location function is to be performed. For example, the MSC 220 can initiate the location function each time a mobile telephone dials 911. In

addition, the mobile telephone system provider can offer this location function as a service to its customers. In this situation, if the user of the mobile telephone 120 dials a certain number, the MSC 220 can initiate the location function and the location of the mobile telephone could be communicated to the mobile telephone user. Further, the MSC 220 can determine whether a location function is requested by referring to a user profile stored in the MSC 220. For example, a company, that uses a fleet of vehicles may want a location function performed each time a call is initiated from one of its mobile telephones. As seen by these examples, by performing an A/B number analysis, the MSC 220 can initiate a location function based on various criteria. One skilled in the art would recognize that various other A/B number analyses could be performed to determine whether initiation of the location function is requested. If the MSC 220 determines that a location function is requested, a location function in the MLM 230 is requested. Whether or not a location function is initiated, the voice portion of the signal can be sent to the appropriate destination. For example, if the mobile telephone 120 called a land line telephone, then the voice signal can be sent to the public switch telephone network (PSTN). Thus, calls that result in the initiation of a location function do not need to terminate at the MLM 230. Voice information may be transmitted to the appropriate location based upon the number dialed.

In one example, the location of a mobile telephone 120 within the geographic service area 100 can be determined by the MLM 230 as follows. The MSC 220 passes the following information to the MLM 230. The MAHO list 300 containing the $RSSI_{1-6}$ is sent by the mobile telephone 120. The cell site currently serving the mobile telephone 120 is identified. The signal strength of the voice channel signal from the serving cell site, represented as ($RSSI_V$), is measured and sent by the mobile telephone 120.

The MLM processor 232 then executes computer program code 238 stored in memory 234. The computer program code 238 describes the location algorithm to be performed by the processor 232. This algorithm is shown in the flow diagram of FIG. 10. The first step 1002 is to calculate two location zones, zone 1 and zone 2. Zone 1 is defined by the geographic coverage area of the cell currently serving the mobile telephone 120. For example, if the serving cell was cell 7 (see FIG. 1) then

zone 1 would be the geographic coverage area included in cell 7. Zone 2 is calculated by the MLM 230 as described below in conjunction with FIGS. 4-8.

The first step in calculating zone 2 is to evaluate $RSSI_V$ and $RSSI_{1-6}$ to determine the three strongest signal strengths. For the present example, assume that cell 7 is the serving cell and the strongest signal strengths are the voice channel signal strengths ($RSSI_V$) being communicated over antenna 107, the signal strength associated with the control channel for cell 2 ($RSSI_2$) being communicated over antenna 102, and the signal strength associated with the control channel for cell 4 ($RSSI_4$) being communicated over antenna 104. Using these signal strengths, it is possible to estimate the distance of the mobile telephone 120 from each of the antennas 102, 104, 107 using the following equation:

$$\text{RSSI (dBm)}=\text{EIRP(dBm)}-\text{Propagation Loss(dB)} \quad (1)$$

In the above equation, RSSI is the known signal strength being received by a mobile telephone from an antenna. EIRP is the effective isotropic radiated power of the antenna, and it depends on the power of the transmitter (TxPower) and the gain of the antenna (Antenna Gain), such that EIRP (dBm)=TxPower(dBm)+Antenna Gain(dBi). For each antenna 102, 104, 107, the TxPower (dBm) and the Antenna Gain (dBi) are fixed constants and thus the EIRP for each of the antennas is a known value. See, for example, C.A. Belanis, Antenna Theory: Analysis and Design, John Wiley & Sons, New York, 1982.

The second term of equation (1), Propagation Loss, is modeled based upon the Hata model, which is illustrated in FIG. 4. The model is of the form:

$$\text{Propagation Loss(dB)}=A+B \log d,$$

wherein A is the 1 km intercept point which depends on the height of the antenna and the frequency being transmitted and includes a component which is due to the antenna height above the ground. B is the propagation path slope, and d is the distance of the mobile telephone from the antenna (in kilometers). As shown in FIG. 4, EIRP(dBm)-A is the RSSI value of the line 402 at d=1 km, and B is the slope of the line at 402. For further information on the Hata model see, M. Hata, "Empirical Formula for Propagation Loss in Land Mobile Radio Services," IEEE Trans. Vehicular Tech. Vol. VT-29 (August 1980).

Thus, equation (1) becomes:

$$RSSI=EIRP-(A+B\log d) \quad (2)$$

Solving for distance d:

$$d=10^{\frac{1}{B}[EIRP-RSSI-A]} \quad (3)$$

In equation (3), EIRP is a known constant for each of the cell site antennas; the RSSI value is known based on measurements made by the mobile telephone 120 and the 1 km intercept point, *A*, is a known constant depending on the height of the antenna and the frequency being transmitted. Thus, the only unknown in equation (3) is the propagation path slope *B*. It is known that *B* is environment dependent and is generally bound as:

20 dB/dec (line of sight)$\leq$B $\leq$45 dB/dec (heavy urban).

Typically, propagation path slope is given in terms of terrain and building density. Typically categories are: Suburban: B=30, Urban: B=35, and Downtown: B=40. Thus, by estimating the value of B for each antenna, the distances d_2, d_4, and d_7 of the mobile telephone 120 from antennas 102, 104, 107 respectively, can be calculated as follows:

$$\log(d_2)=\frac{1}{B_2}[EIRP_2-RSSI_2-A_2]$$

$$\log(d_4)=\frac{1}{B_4}[EIRP_4-RSSI_2-A_4]$$

$$\log(d_7)=\frac{1}{B_7}[EIRP_7-RSSI_7-A_7],$$

wherein $EIRP_n$ is the effective isotropic radiated power of the antenna in cell *n*, A_n is the 1 km intercept point between the mobile telephone 120 and cell n, and *B* is the estimated propagation path slope of the environment in cell *n*.

After the distances d_2, d_4, and d_7 are calculated, a location area is determined by plotting the following circles, as illustrated in FIG. 5:

a circle 502 of radius d_2 centered at antenna 102;

a circle 504 of radius d_4 centered at antenna 104; and

a circle 507 of radius d_7 centered at antenna 107.

The intersection area 510 of circles 502, 504, 507 estimates the location of the mobile telephone 120 within the geographic serving area 100. Since the values or B_2, B_4 and B_7 are estimates, the resulting distances d_2, d_4 and d_7 will have a certain

error component based upon the estimate of B. The calculated distances d_2, will have other error components as well, based upon cell characteristics other than propagation path slope. Examples of such cell characteristics are the relative height of the mobile telephone to each cell site antenna and the gain reduction due to antenna pattern rolloff. The algorithm described herein does not take these other error components into account. In FIG. 5, d_2, d_4 and d_7 are overestimates of the distance of the mobile telephone 120 from each of the antennas 102, 104 and 107, and thus the resulting location can only be determined to be within area 510.

It is also possible that the resulting distances , d_2, d_4 and d_7 would be underestimates of the distance of the mobile telephone 120 from each of the antennas 102, 104 and 107. Such a case is illustrated in FIG. 6, in which the location estimate is within area 602. The area 602 is delimited by drawing the three lines 606, 607 and 608, which are tangent to the circles 616, 617 and 618 respectively. These three lines 606, 607 and 608 are adjusted such that they define a triangle of reduced area. The area defined by such a triangle is the location estimate area shown in FIG. 6 as area 602.

If the resulting distances d_2, d_4 and d_7 are accurate estimates of the distance of the mobile telephone 120 from each of the antennas 102, 104 and 107, then the drawn circles would intersect at a point. Such a case is illustrated in FIG. 7, in which the location estimate is shown as point 702.

Since the only variable in the distance equation is the propagation path slope B, it is possible to improve the accuracy of the location estimate by varying the estimates or B_2, B_4 and B_7 to reduce the error component of the calculated distances d_2, d_4 and d_7.

The basis for this technique is illustrated in FIG. 8. Lines which represent the distance between antennas 102, 104, and 107 are drawn. Line $L_{2\text{-}7}$ represents the distance between antennas 102 and 104. Line $L_{4\text{-}7}$ represents the distance between antennas 104 and 107. The lengths of lines $L_{2\text{-}4}$, $L_{2\text{-}7}$ and $L_{4\text{-}7}$ are known because the locations (in latitude and longitude coordinates) of the cell site antennas are known. As before, the lines d_2, d_4 and d_7 represent the calculated distances of the mobile telephone 120 from each of the antennas 102, 104 and 107, respectively. The angles

m, n, and o can be obtained as functions of the distances d_2, d_4, d_7 from the following expressions based on the law of cosines:

$$L_{2\text{-}4}=d_2^2+d_4^2-2d_2d_4\cos(m)$$

$$L_{2\text{-}7}= d_2^2+d_7^2-2d_2d_7\cos(o)$$

$$L_{4\text{-}7}=d_4^2+d_7^2-2d_4d_7\cos(n).$$

Referring again to FIG.8, the sum of the angles m, n, and o is 360 degrees so that $360 - (\angle m + \angle n + \angle o) = 0$.

The calculation of the distances d_2, d_4 and d_7 tends to be most accurate when each of these angles is positive and the sum of the angles is 360 degrees. The only variables in the calculations of d_2, d_4 and d_7 are the propagation path slopes B_2, B_4 and B_7, respectively, which values are generally between about 20 dB/dec and 45 dB/dec. Thus, the values d_2, d_4 and d_7 are calculated using equations 4, 5 and 6 while varying the propagation path slopes B_2, B_4 and B_7 between 20 dB/dec and 45 dB/dec. The resulting distances d_2, and d_4 and d_7 are then used to evaluate the sum of angles m, n, and o. The values of d_2, and d_4 and d_7 for which the sum is closest to 360 with all its terms positive gives values for d_2, and d_4 and d_7 with reduced error components.

When the distances d_2, d_4, and d_7 with reduced error components are found, the location area of the mobile telephone 120 is determined by plotting appropriate circles as described above. The geographic location (i.e. latitude and longitude) of antennas 102, 104, 107 in the geographic serving area 100 are known and, in one embodiment, are stored as cell site-information 236 in the memory 234 of the MLM 230. The MLM 230 uses these known cell site locations to determine the geographic location of the estimated location area by, for example, plotting the estimated location area on a map. This calculated location area is the zone 2 location. The MLM 230 can also include a database 250 configured to provide sets of RSS values corresponding to mobile station locations in the geographic service area of the network.

As discussed above, a GPS receiver/processor unit 125 can be used as a component in the mobile telephone 120 which is to be located. As is well known in the art, a GPS receiver/processor receives signals from satellites orbiting the earth and translates these signals into latitude and longitude coordinates of the position of

the GPS receiver/processor. A typical GPS receiver/processor is accurate to within approximately 50 feet. The MLM 230 uses information provided by the GPS receiver in the mobile telephone 120 to increase the accuracy of the geographic location estimate.

A known problem with GPS receivers is that location accuracy requires line of sight communication with multiple satellites and do not return accurate latitude and longitude coordinates if a line of sight to the satellite receivers is blocked. For example, GPS receivers typically do not report accurate coordinates when located inside a building or in wooded areas. This limitation can be compensated using the last GPS coordinate position which is within a predefined confidence level. This is accomplished by using a calculated average latitude and longitude position, along with a latitude and longitude error as follows.

FIG. 9 shows a graph of the latitude and longitude coordinates calculated by a GPS receiver/processor 125 over time intervals (t_{1-15}). At each time interval t_n, the GPS receiver/processor 125 calculates the current coordinates of the mobile telephone 120. At time t_n, the latitude coordinate is represented by Lat(t_n) and the longitude coordinate is represented by Long (t_n). The coordinates Lat(t_n) and Long (t_n) calculated by the GPS receiver/processor 125 will generally vary smoothly over time. However, of the line of sight to the satellites is blocked, for example if the mobile telephone 120 enters a building, the calculated coordinates will not be accurate. This is illustrated in FIG. 9 at intervals t_{8-12}.

The GPS receiver/processor 125 is configured to compute the average of the latitude and longitude coordinates over a predetermined sliding time window, where the average latitude and longitude for the window ending at time period t_n is represented as Lat_Avg(t_n) and Long_Avg(t_n) respectively. The length of the sliding time window is programmed into the GPS receiver/processor 125 and can vary depending on, for example, the desired accuracy and/or particular application. If this sliding time window is defined as N time periods, then the average latitude and a longitude coordinates Lat_Avg(t_n) and Long_Avg(t_n), respectively, for the time window ending at t_n is an average of N latitude coordinates and N longitude coordinates associated with times $t_{n-N+1}, \ldots, t_n$.

The values of Lat_Avg(t_n) and Long_Avg(t_n) can be continuously computed by the GPS receiver/processor 125 at successive time periods. For example, if the time period of the sliding time window N is set to 5 time periods, then the time window ending at time period t_8 is shown in FIG. 9 at 905. The values of Lat_Avg(t_8) and Long_Avg(t_8) would be calculated by the GPS receiver/processor 125 at time t_8 as averages of 5 values associated with times $t_4, \ldots, t_8$.

In addition to the average coordinates, the GPS receiver/processor 125 also calculates a peak error of the latitude and longitude coordinates during the time window. The peak error for the latitude coordinate for the time window ending at time t_n is represented as Error_Lat(t_n), and the peak error for the longitude coordinate for the time window ending at time t_n is represented as Error_Long(t_n). These peak errors are calculated by comparing the instantaneous latitude and longitude coordinates for each time period during the time window with the average coordinates of the time window as follows:

$$Error\_Lat(t_n)=max\{|Lat_{n-N+1\ldots n}-(Lat\_Avg(t_n))|\}$$

$$Error\_Long(t_n)=max\{|Long_{n-N+1\ldots n}-(Long\_Avg(t_n))|\}$$

For example, to calculate the peak error for the time window ending at time t_8, the calculation would be:

$$Error\_Lat(t_8)=\max\{|Lat_{4\ldots 8}-(Lat\_Avg(t_8))|\}$$

$$Error\_Long(t_8)=\max\{|Long_{4\ldots 8}-(Long\_Avg(t_8))|\}$$

Thus, the instantaneous latitude coordinates Lat(t_4), Lat(t_5), Lat(t_6), Lat(t_7), and Lat(t_8), are compared with Lat_Avg(t_8), and the largest deviation from the average latitude is the peak latitude error. Similarly, the instantaneous longitude coordinates Long(t_4), Long (t_5), Long (t_6), Long (t_7), and Long (t_8) are compared with Long_Avg(t_8), and the largest deviation from the average longitude is the peak longitude error. As an illustration, consider the time window 916 ending in time period t_{12}, in FIG. 9. The value of Lat_Avg(t_{12}) is represented by the line 910. The largest deviation from line 910 is the instantaneous latitude Lat(t_{10}) represented at point 914. Thus the peak error Error_Lat(t_{12}) during time window 916 is represented as the distance 912 between Lat(t_{10}) 914 and Lat_Avg(t_{12}) 910.

The GPS receiver/processor 125 uses the error values of Error_Lat(t_n) and Error_Long(t_n) to store the last reliable coordinates in the storage registers as

follows. These storage registers may be memory location in the GPS receiver/processor. Alternatively, these storage registers may be memory locations in a separate memory unit which is accessible by the GPS receiver/processor 125. At each time interval t_n, the GPS receiver/processor 125 compares the peak error values Error_Lat(t_n) and Error_Long(t_n) with programmed error thresholds Err_Thresh_Lat and Err_Thresh_Long. As with the programmable sliding time window, these thresholds can vary depending on the desired accuracy and/or particular application. These thresholds are defined such that if the peak error values Error_Lat(t_n) and Error_Long(t_n) are within the thresholds Err_Thresh_Lat and Err_Thresh_Long respectively, then it can be assumed that the instantaneous coordinate values Lat(t_n) and Long(t_n) are within acceptable reliability limits. At each time period t_n, if the peak errors of both the latitude and longitude are within the threshold values, then the instantaneous coordinate values are stored in memory registers Lat_reg and Long_reg respectively. If the peak errors for either the latitude and longitude are not within the threshold values, then the instantaneous coordinate values Lat(t_n) and Long(t_n) are not stored in memory registers Lat_reg and Long_reg respectively. This technique assures that the memory registers Lat_reg and Long_reg contain recent reliable latitude and longitude coordinates.

In addition to the information sent by the mobile telephone 120 described above, the following GPS information is sent over the air interface 202 to the mobile telephone system 200 during each time period t_n:

Lat(t_n) and Long(t_n);
Lat_reg and Long_reg;
Error_Lat(t_n) and Error_Long(t_n); and
Err_Thresh_Lat and Err_Thresh_Long.

The MSC 220 operates as described above to initiate the location function of the MLM 230 under certain conditions. The algorithm 238 stored in memory 234 of MLM 230 instructs the processor 232 to operate as described below in conjunction with FIG. 10. Thus, upon initiation of the location function, the MLM 230 operates according to the flow diagram of FIG. 10 to calculate the location of the mobile telephone 120.

As discussed above, zone 1 is defined by the geographic coverage area of the cell currently serving the mobile telephone 120 and zone 2 is the location area calculated by the MLM 230 as described above in conjunction with FIGS. 4-8. Zone 1 will generally define an area larger than zone 2. Referring to FIG. 10, in step 1004 the MLM 230 determines if the peak latitude and longitude error values for the current time window are within the predetermined threshold error values. If they are, then the instantaneous latitude and longitude coordinates $Lat(t_n)$ and $Long(t_n)$ are considered to be of acceptable accuracy and they are used for further processing in step1012. In step 1012 it is determined whether the instantaneous GPS coordinates define a location which is within zone 1. If not, then the MLM 230 returns the zone 2 location estimate with a moderate confident level in step 1010. If step 1012 determined that the instantaneous GPS coordinates define a location which is within zone 1, then in step 1020 it is determined whether the instantaneous GPS coordinates define a location which is within zone 2.. If they do, then the MLM 230 returns the instantaneous coordinates as the location estimate with a high confidence level in step 1024. If the instantaneous GPS coordinates do not define a location which is within zone 2, then the MLM 230 returns the instantaneous coordinates as the location estimate with a moderate confidence level in step 1018.

If in step 1004 the MLM 230 determines that the peak latitude and longitude error values for the current time window are not within the predetermined threshold error values, then the instantaneous latitude and longitude coordinates $Lat(t_n)$ and $Long(t_n)$ are considered not to be of acceptable accuracy, and the latitude and longitude values stored in the memory registers Lat_reg and Long_reg are used for further processing in step 1006. In step 1006 it is determined whether the GPS coordinates stored in the memory registers define a location which is within zone 1. If not, then the MLM 230 returns the zone 2 location estimate with a low confidence level in step 1008. If the GPS coordinates stored in the memory registers define a location which is within zone 1, then in step 1014 it is determined whether the GPS coordinates stored in the memory registers define a location which is within zone 2. If not, then the MLM 230 returns the memory register coordinates as the location estimate with a moderate confidence level in step 1016. If the GPS coordinates stored in the memory register define a location which is within zone 2, then the

MLM 230 returns the memory register coordinates as the location estimate with a high confidence level in step 1022.

Once the geographic location area is determined, the MLM 230 routes the information to the appropriate end user destination. The appropriate routing information 240, in one embodiment, is stored in memory 234 of the MLM 230. For example, if the location function was initiated because of a 911 call from the mobile telephone 120, the MLM 230 will route the location information to the appropriate public service provider. If the location function was initiated because the MSC determined that the cellular telephone number belonged to a fleet company, the location information would be sent to the appropriate fleet company. Further, the location information could be communicated to the mobile telephone 120 itself if the request for location information came from the user of the mobile telephone 120.

Power levels obtained by a mobile station and used in MAHO, or other sets of received signal strengths, power levels, or communication parameters can be used to locate a mobile station based on power contours or other predetermined power levels associated with an arrangement of cells. For example, as shown in FIG. 11, a mobile station 1102 transmits a set of received signal strength (RSS) values such as those illustrated in FIG. 2 to a network 1104 configured to deliver the reported RSS values to a mobile location module (MLM) 1106. The mobile location module 1106 includes a processor 1108 configured to receive the set of RSS values and identify a mobile station location based on sets of RSS values associated with a plurality of locations in a coverage area. As shown in FIG. 11, the sets of RSS values are stored in a database 1110. Typically the MLM 1106 is associated with a base station and the database 1110 includes sets of characteristic or predetermined RSS values associated the geographic area served by a particular base station. While cells are shown as contiguous and non-overlapping in FIG. 1, networks can include overlapping cells or geographic gaps between cells. Databases associated with several cells can include similar predetermined RSS values.

In a representative example, a network service area 1200 or a portion of a network service area such as a cell is divided into a service grid 1202 as shown in FIG. 12. The service grid 1202 is associated with a rectangular array of zones Z_{IJ} corresponding to coordinates (X_I, Y_J), respectively, where I, J are integers associated

with a number of rows and a number of columns, respectively. For convenience, a division into 16 rectangular zones is illustrated in FIG. 12, but a service area can be divided into fewer or more zones. Zones can be associated with a service area of one or more cells, or an entire network service area can be divided into a single set of zones. Zones can also be established based on nonrectangular grids such as triangular, square, hexagonal, curved, or other grids. In addition, the division can include a variety of regular and irregular shapes. The service area divisions can have different areas as well.

A mobile station location estimate can be obtained based on predetermined sets {RSS} of received signal strengths RSS by identifying a zone for which the reported RSS values match a set of RSS values associated with the zone. Matching can be determined based on computation of, for example, a sum of mean square differences between the reported RSS values (or some of these values) and the predetermined, stored zonal RSS values. While a mobile station typically reports several RSS values, zone matching can be based on computations using only selected RSS values. After a zone is selected, coordinates associated with the zone are provided as an estimate of mobile station location. Zone dimensions can be used to provide a location error estimate.

Another representative division of a network service area or a cell service area is illustrated in FIG. 13. Zones 1301-1312 are associated with perimeter coordinates (X,Y) that correspond to zone corners in the example of FIG. 13. For example, the zone 1301 is associated with perimeter coordinates (X1,Y1), (X2,Y1), (X1,Y2), and (X2,Y2) that correspond to sets {RSS(1,1)}, {RSS{2,1)}, {RSS(1,2)}, and {RSS(2,2)} of received signal strength values, respectively. A mobile station location estimate can be identified based on RSS values reported by a mobile station (reported RSS values, or RSS(mobile)). If a zone area is unacceptably large for a predetermined positional accuracy in a mobile station location estimate, mobile station location can be based on interpolation using the sets {RSS} of predetermined RSS values associated with one or more zones.

The mobile location module 1106 processes the set of reported received signal strengths {RSS(mobile)} to provide an estimate of mobile station location by associating the set {RSS(mobile)} with one or more of the sets {RSS} of received

signal strengths in the database 1110. An estimate of mobile station location corresponds to coordinates associated with the selected set of stored RSS values.

In an example, a mobile station location is estimated as described above based on, for example, triangulation using three RSS values. The triangulation procedure, with or with additional error corrections such as that described above, can be used to establish an initial mobile station location estimate (Xest, Yest). The mobile location module 1106 then compares reported RSS values with sets of RSS values associated with a grid such as the grids 1200, 1300, or with RSS values at one or more locations in a geographical area near the initial mobile station location estimate (Xext,Yest). Typically, these RSS values are stored in a database such as the database 1110 of FIG. 11. Based on the predetermined sets {RSS}, a second mobile location estimate is obtained.

With reference to FIG. 14, a mobile location module 1400 includes a database 1401 configured to store sets of RSS values associated with grid locations $1402_1, \ldots, 1402_G$. A processor 1404 is in communication with the database 1401 and is configured to receive data such as mobile-assisted hand-off data, typically a set of RSS values that are reported by a mobile station. The processor 1404 computes a score for all or selected RSS sets from the database 1401 based on the reported RSS values. The score values can be configured so that high values are associated with RSS values that do not correspond to a selected location while low scores indicate that the reported RSS values are similar to values of a selected location, or the score values can be otherwise configured. In a particular example, four grid locations associated with favorable score values are selected and stored in a memory 1406 and these grid values are communicated to an interpolator 1410 that provides interpolated location values at an output 1412. Typically, interpolation and score computation are produced with a microprocessor, workstation, an embedded processor, or special purpose processing hardware and software, so that the processor 1404 and the interpolator 1410 can be provided in the same hardware.

In some examples, a first mobile location estimate is based on the stored sets of RSS values and triangulation based estimation is not used, or triangulation based estimation is used in conjunction with RSS values. Alternatively, a GPS system associated with the mobile station can be used to establish a first mobile location

estimate (Xest, Yest) and stored sets of RSS values are used to produce a second mobile location estimate.

In other examples, a mobile location estimate is based on the sets of RSS values, and GPS, triangulation, or other methods are used to produce a second estimate based on the first estimate. As noted above, the sets {RSS} can include two or more power levels and typically include six or more RSS values, and mobile location estimates can be based on one or more of the RSS values while some RSS values are not used.

Comparison of reported RSS values with stored sets of RSS values in a database can be performed based on, for example, evaluation of a sum of squares of differences between the reported RSS values and stored RSS values associated with one or more geographical locations. Typically, one or more geographical locations (X,Y) associated with a minimum or a relatively small sums of squares are selected as mobile station location estimates. If more than one location is selected, additional methods such as triangulation based methods can be used to select among multiple location estimates. Alternatively, GPS based locations can be used to select a likely mobile station location. Although it is unlikely that a single estimate cannot be extracted from multiple location estimates, more than one mobile station location estimate can be reported to an emergency responder or other recipient.

According to some examples, mobile station locations are established by the a mobile network location module based on one or more series of received signal strength (RSS) contours obtained by, for example, measurements of received signal strength or calculated received signal strengths. With reference to FIG. 15, a wireless communication system 1500 includes a mobile station 1502 such a portable digital assistant or other mobile device that communicates via an air interface 1503 with a mobile switching center (MSC) 1504. The MSC 1504 is in communication with a mobile network location module (MLM) 1506 that is configured to estimate a mobile station location based on received signal strength (RSS) contours associated with radio base stations. The contours can be stored in a database 1508 as values RBS(1) . . . RBS(N) corresponding to respective radio base stations, wherein N is a number of radio base stations.

FIG. 16 illustrates representative cells 1602, 1604, 1606 and associated radio base stations (RBS) 1610, 1612, 1614, respectively. Received signal strength (RSS) contours 1620-1623 and 1630-1633 that are associated with, for example, cells 1602, 1604 are shown. In general, additional contours associated with other RSS values (i.e., additional radio base stations) are used but these contours are not shown in FIG. 16. The contours 1620-1623 and 1630-1633 are associated with locations for which received power levels from respective radio base stations are approximately equal. In an example, the mobile station is in communication via the cell 1602 (RBS 1610) and reports a received signal strength from RBS 1610 that is associated with the contour 1623. The mobile location module selects geographical locations associated with the contour 1623 as possible locations of the mobile station. Because the mobile station 1604 reports a set of RSS values, additional power contours associated with additional radio base stations can be used to locate the mobile station. For example, the mobile station reports an RSS value associated with the radio base station 1612. As an example, if this RSS value can be associated with the contour 1630, the mobile station location estimate can be improved and an estimated location is associated with regions 1650, 1652. This procedure can be repeated for additional RSS values and an estimated mobile station location can be reported based on the identified contours.

Contour spacing can be set based on an acceptable spatial resolution so that associating one or more contours with associated reported RSS values permits a mobile location estimate to have a predetermined spatial resolution. Alternatively, interpolation or other method can be used to increase spatial resolution and establish mobile locations between contours.

Mobile station location estimates based on received signal strength contours can be enhanced or verified using triangulation based methods, GPS based methods, or RSS pattern based methods. Typically the set of RSS values includes six or more received signal strength values but only one or more of these values can be used to establish a mobile location. In some examples, identification of a contour based on a first RSS value is used to establish a range of locations. In addition, a received voice power level RSS_V can be reported by the mobile station and used in preparation of mobile station location estimates in this or other methods.

While computation of an error score associated with a comparison of reported RSS values with predetermined sets of measured or calculated RSS values can be used to estimate mobile station location, such estimates can also be prepared based on signal strength patterns. For example, ratios of the reported RSS values can be compared with ratios of the predetermined RSS values. Alternatively, the predetermined RSS values and the set of reported RSS values can be correlated to identify a set of predetermined RSS values similar to the reported RSS values, and an associated location provided as a mobile station location estimate. Other pattern recognition methods can also be used.

FIG. 17 illustrates emergency services provided by a wireless network that is configured to report mobile station locations. A mobile station 1702, such as a cell phone, PDA, or other mobile or portable device voice, data, or voice/data device, reports one or more received signal strength values to a mobile switching center (MSC) 1706 using an air interface 1704. The mobile switching center 1704 delivers the reported RSS values to a mobile positioning center (MPC) 1708 that is in communication with a position determining processor (PDP) 1710. The mobile positioning center 1708 is also in communication with a public-safety answering point (PSAP) 1712 that is configured to communicate with an emergency services (911-selective) router 1714. The MSC 1706 is also in communication with the 911-selective router 1714.

In operation, the mobile station 1702 initiates an emergency services (911) request that is communicated via the air interface 1704 to the MSC 1706. The MSC 1706 sends a message to the MPC 1708 indicating that a 911 call has been placed and that the MSC 1706 is configured for mobile location services. The MPC 1708 returns routing instructions to the MSC 1706 so that the call is routed to the PSAP 1712 via the 911 selective router. The MPC 1708 queries the MSC 1706 for RSS values and requests that the mobile station report RSS values. The MSC 1706 forwards reported RSS values to the MPC 1708 and the PDP 1710 delivers a mobile location estimate to the MPC 1708. The PSAP 1712 queries the MPC 1708 for the mobile location that is communicated by the MPC 1708. As the emergency services request continues, additional requests for mobile location can be serviced so that

movement of the requestor can be traced. Based on these additional location estimates, other information such as direction of travel can be obtained.

While determining a location of a cell phone in a wireless network is important for providing emergency services based on an emergency services number such as 911 service, mobile location estimates can be included in other applications such as identification of a mobile location with respect to other users of a mobile network or determination of user location with respect to services such as dining, shopping, accommodations, entertainment, transportation, or other services. Such locations can be established without reference to dedicated positioning systems such as GPS and GPS hardware is unnecessary. Because GPS signals are relatively weak, location determination based on MAHO parameters permits location determination even in indoor or covered areas in which GPS signal reception is difficult or impossible. However, GPS can be used in association with MAHO based methods.

Location determination can also be similarly implemented in other networks that include mobile-assisted handoff. For example, wireless networks based on so-called BLUETOOTH technology, or on IEEE 802.11, can be configured so that mobile devices report received signal strengths. In addition, wireless networks using TDMA, CDMA, FDMA, or other protocols can be configured to implement mobile-assisted location services. Such networks can include control channels, voice channels, data channels, or other communication channels, and reported power levels in any of these channels can be used in mobile location.

Mobile station location methods and apparatus are described above with reference to selected communication standards, but in other examples additional systems are used. For example, systems based on the Global System for Mobile Communication (GSM), IS-95, IS-54, General Packet Radio Service (GPRS), the Digital Cordless European Telecommunication (DECT) service, or Cellular Digital Packet Data (CDPD) service, GERAN (GSM/EDGE) service, or combinations thereof can be provided. Location methods and apparatus can be configured for systems that provide wide area voice coverage, local voice coverage, wide area data services, local area data services, or combinations thereof.

Representative examples of handoff are described above with reference to handoff in voice networks based on base stations. In general, a connection between

a mobile or portable device and a network is made at so-called points of attachment. In cellular telephone networks, base stations generally serve as points of attachment while in wireless local area networks (WLANs), so-called access points serve as points of attachment. In some examples, a mobile device can connect to a network with base stations or access points. Received signal strength (RSS) values can be associated with network points of attachment, but other parameters such as path loss, symbol error rate, bit error rate, signal-to-interference ratio, carrier-to-interference ratio, block error rate, or other parameters can be used. For convenience, such parameters are referred to as attachment indicators.

In wireless networks in which a mobile station reports power levels periodically, mobile station location can be updated or tracked while voice or data communication is in progress, without interrupting communications. Accordingly, the movement of a mobile station can be tracked which can be especially important in supplying emergency services. In some TDMA systems, such received power levels are reported as often as once per second.

Signal strength contours and/or grids can be established in several ways. Because sophisticated radio frequency (RF) design software is available, RSS or other characteristic attachment indicator values can be calculated as a function of location of with spatial grids having dimensions of 50 m or less. A number of RF factors can be used in such a calculation including antenna height, antenna type, down-tilt, beam width, effective radiated power, and ground clutter. Such computations can include consideration of geographical factors such as surface topography and other factors. Such computed RSS values can be confirmed by field measurements and deficiencies in predicted values can be corrected or compensation based on field measurements. Alternatively, RSS values can be based on a series of measurements obtained by, for example, driving a vehicle in the geographical service area and recording RSS values. In other alternatives, some values are predicted based using RF design software while other values are measured. In addition, as RSS values are reported in association with actual GPS values, contour or grid values can be revised based on these measurements during network use, without use of dedicated hardware or additional support personnel.

Methods and apparatus are described above with reference to received signal strengths associated with one or more points of attachment to a network. In other examples, error rates, propagation delays, or other parameters can be associated with points of attachment and used to estimate locations. In addition, estimates are typically based on comparisons with signal strengths associated with three or more points of attachment, but in some examples, signal strengths associated with two points of attachment can be used. In some examples, attachment indicator values associated with attachment points are calculated or measured and stored in database. In other example, appropriate attachment indicator values are established as needed by, for example, computation based on propagation characteristics or interpolation based on stored values. Attachment indicator values associated with geographical locations can be referred to as characteristic attachment indicator values and such values can be stored, calculated, or measured.

Because mobile station location can be based on RSS values that are reported during normal network operation, such location methods tend to be reliable. In addition, any network failure that would impair mobile station location estimation is associated with other networks errors in routine network use so that such failures tend to be detected promptly. Other advantages of RSS level based mobile location determination is that the mobile station need not be a network subscriber, because RSS level reporting can be performed by non-subscribers. Thus, emergency services such as 911 calling are available to non-subscribers or to mobile stations that are not initialized, or that have no associated phone number.

Characteristic values associated with a network or a portion of a network can be stored in a memory. As used herein, memory includes random access memory (RAM), read-only memory (ROM), hard disks, floppy disks, magnetic tape, and other storage media.

Examples are described above with reference to representative mobile devices and wireless networks. These examples are illustrative, and these examples can be modified in arrangement and detail. We claim all that is encompassed by the appended claims.

We claim:

1. A mobile station location processor, comprising;

an input configured to receive attachment indicators associated with at least two points of attachment of the mobile station;

a memory configured to store sets of predetermined attachment indicators associated with the at least two points of attachment; and

an estimation unit configured to provide an estimate of the mobile station location based on a comparison of the received attachment indicators and at least one set of the at least two predetermined attachment indicators.

2. The mobile station location processor of claim 1, wherein the estimation unit is configured to provide the estimate of the mobile station location based on a comparison of the received attachment indicator values and the sets of attachment indicator values associated with the at least two points of attachment.

3. The mobile station location processor of claim 2, wherein the received attachment indicator values are reported by the mobile station.

4. The mobile station location processor of claim 3, wherein the attachment indicator values are received signal strength values.

5. The mobile station location processor of claim 1, wherein the attachment indicator values are received signal strength values reported by the mobile station.

6. A mobile location module, comprising:

a processor configured to compare at least two reported received signal strength values with received signal strength values associated with at least two geographical locations in a wireless network; and

an output configured to deliver a mobile location estimate based on the comparison.

7. The mobile location module of claim 6, wherein the processor is configured to determine a score associated with the comparison of the reported received signal strength values with the predetermined received signal strengths.

8. The mobile location module of claim 6, wherein the reported and received signal strength values related to mobile-assisted handoff.

9. A location unit for estimating a location of a mobile station, comprising:

an input configured to receive attachment indicator values associated with the mobile station; and

a processor configured to provide a mobile station location estimate based on predetermined attachment indicator contours associated with network attachment points.

10. The location unit of claim 9, wherein the attachment indicator values are received signal strength values reported by the mobile station and the attachment indicator contours are received signal strength contours.

11. A method of locating a mobile station, comprising:

obtaining a set of received signal strengths associated with the mobile station;

determining a mobile station location based on a comparison of the received signal strengths with predetermined signal strengths.

12. The method of claim 11, further comprising:

determining an error score based on the received signal strengths and the predetermined signal strengths;

wherein the mobile station location is determined by selecting a location associated with selected error score.

13. The method of claim 11, further comprising storing the predetermined signal strengths.

14. A method of locating a mobile station within a geographic service area, comprising:

obtaining attachment indicator values associated with a series of attachment points for the mobile station and; and

comparing the mobile station attachment indicator values with predetermined attachment indicator values associated with the series of attachment points to obtain a mobile station location estimate.

15. The method of claim 14, further comprising reporting the estimated mobile station location estimate.

16. The method of claim 14, wherein the attachment indicator values for the mobile station are reported by the mobile station.

17. The method of claim 16, wherein the attachment indicator values are received signal strength values associated with corresponding radio base stations.

18. The method of claim 14, wherein the attachment indicator values are received signal strength values associated with corresponding radio base stations.

19. The method of claim 14, wherein the mobile station attachment indicator values and the predetermined attachment indicator values are compared by determining a score associated with the predetermined attachment indicator values, and the estimated mobile station location is selected based on the associated score.

20. A method of locating a mobile station, comprising:

obtaining at least one of a latitude and a longitude location estimate based on a global positioning system; and

providing an estimate of mobile station location based on a comparison of mobile station attachment indicator values with predetermined attachment indicator values in a region associated with the latitude and longitude estimates.

21. A method of estimating a mobile station location, comprising:

receiving signal strength values associated with signals received by a mobile station from a plurality of antennas;

calculating a first location area of the mobile station as a geographic coverage area of a serving cell site; and

calculating a second location area of the mobile station based on a comparison of the received signal strength values with predetermined signal strength values associated with at least one location in the coverage area.

22. The method of claim 21, further comprising calculating the characteristic attachment indicator values based on at least one propagation characteristic.

23. The method of claim 22, wherein the at least one propagation characteristic is selected from a group consisting of transmitted power, propagation path slope, and antenna pattern roll-off.

24. A network configured to provide location estimates for a mobile station, comprising:

a processor configured to produce the location estimates based on characteristic attachment indicator values of the network and reported attachment indicator values associated with the mobile station; and

an output configured to deliver the location estimates.

25. The network of claim 24, further comprising a database that includes the characteristic attachment indicator values.

26. The network of claim 24, wherein the processor is configured to determine characteristic attachment indicator values based on at least one propagation characteristic.

27. A method of requesting services from a public-safety answering point (PSAP) with a mobile station, comprising:

delivering a message from the mobile station to the PSAP; and

providing the PSAP an estimate of mobile station location based on a comparison of mobile station attachment indicator values and characteristic attachment indicator values.

28. A method of providing a location estimate for a non-subscribing mobile station in a network, comprising:

receiving a series of attachment indicator values from the mobile station; and

estimating a mobile station location based on characteristic attachment indicator values associated with the network.

29. A method of determining characteristic attachment indicator values for at least a portion of a wireless network, comprising:

measuring the characteristic attachment indicator values; and

storing the characteristic attachment indicator values in a database.

30. The method of claim 29, further comprising associating at least one global positioning system coordinate with the measured characteristic attachment indicator values.

31. A method or revising a database of network characteristic attachment indicator values, comprising:

estimating a location of a mobile station based on a comparison of attachment indicator values reported by the mobile station with the characteristic attachment indicator values;

obtaining an associated global positioning system (GPS) location estimate from the mobile station; and

revising at least one characteristic attachment indicator value based on a comparison of the mobile station location estimate and the GPS location estimate.

FIG. 1

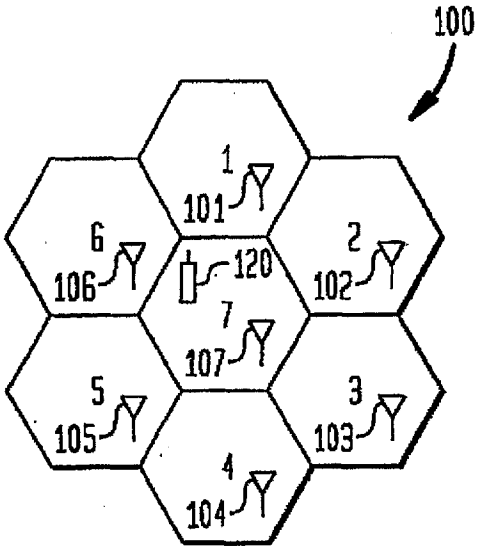

FIG. 3

300

CELL	SS
1	$RSSI_1$
2	$RSSI_2$
3	$RSSI_3$
4	$RSSI_4$
5	$RSSI_5$
6	$RSSI_6$

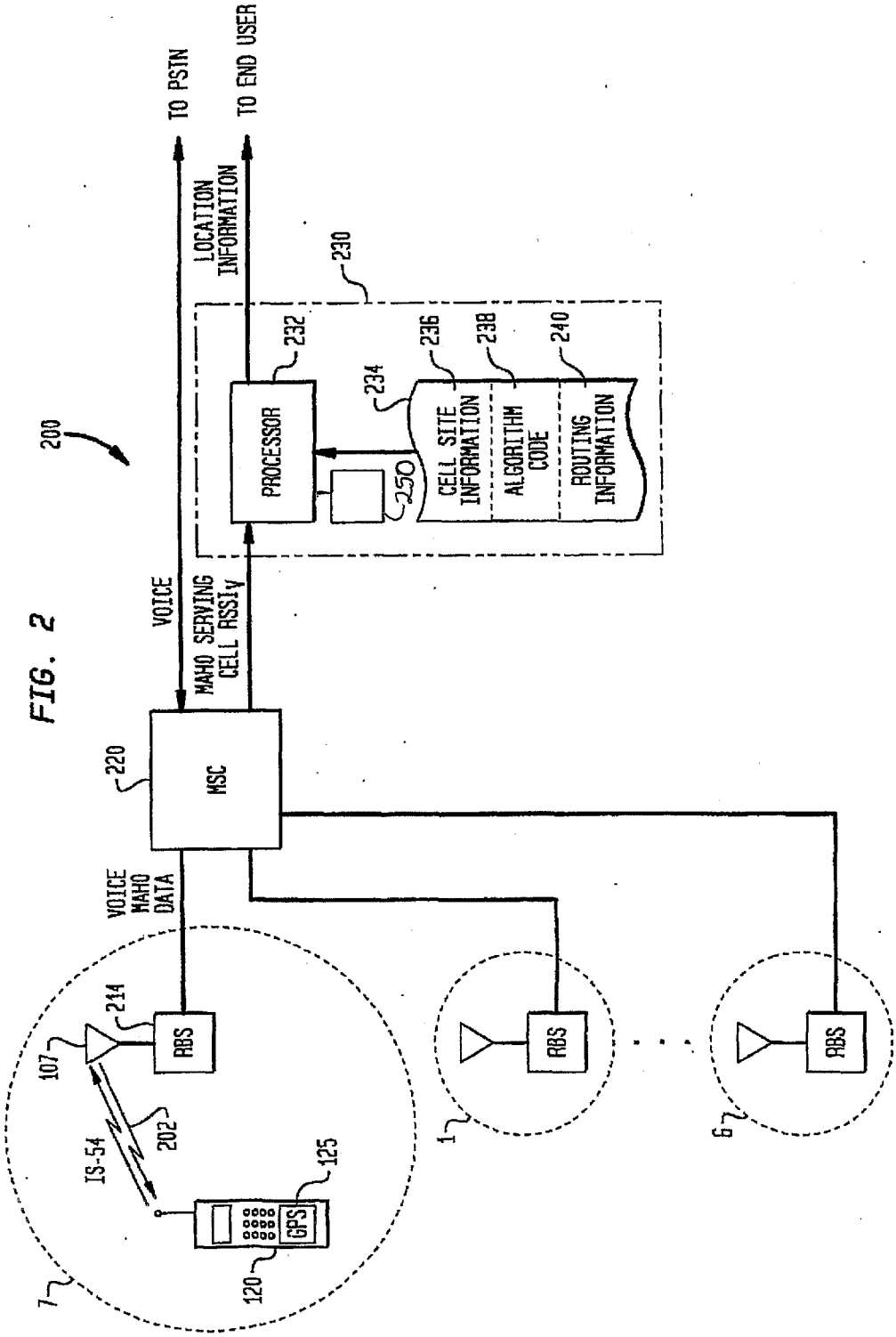
200
TO PSTN
TO END USER
LOCATION INFORMATION
230
232
236
238
240
234
PROCESSOR
250
CELL SITE INFORMATION
ALGORITHM CODE
ROUTING INFORMATION
VOICE
MAHO SERVING CELL RSSIy
220
MSC
VOICE MAHO DATA
214
107
RBS
IS-54
202
125
GPS
120
7
1
6

FIG. 2

FIG. 4

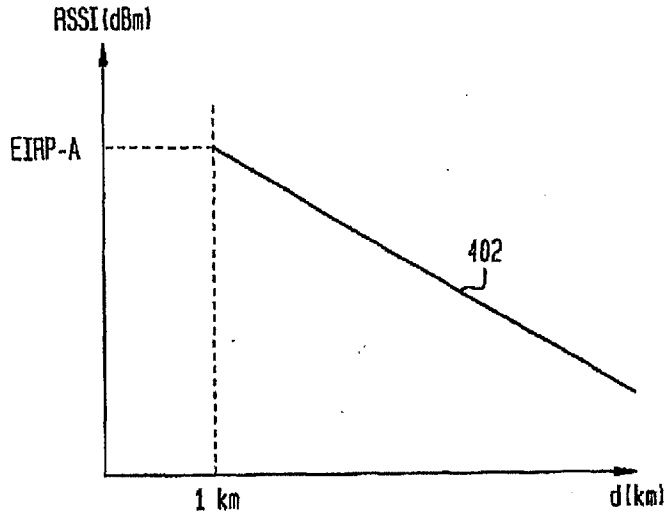

FIG. 5

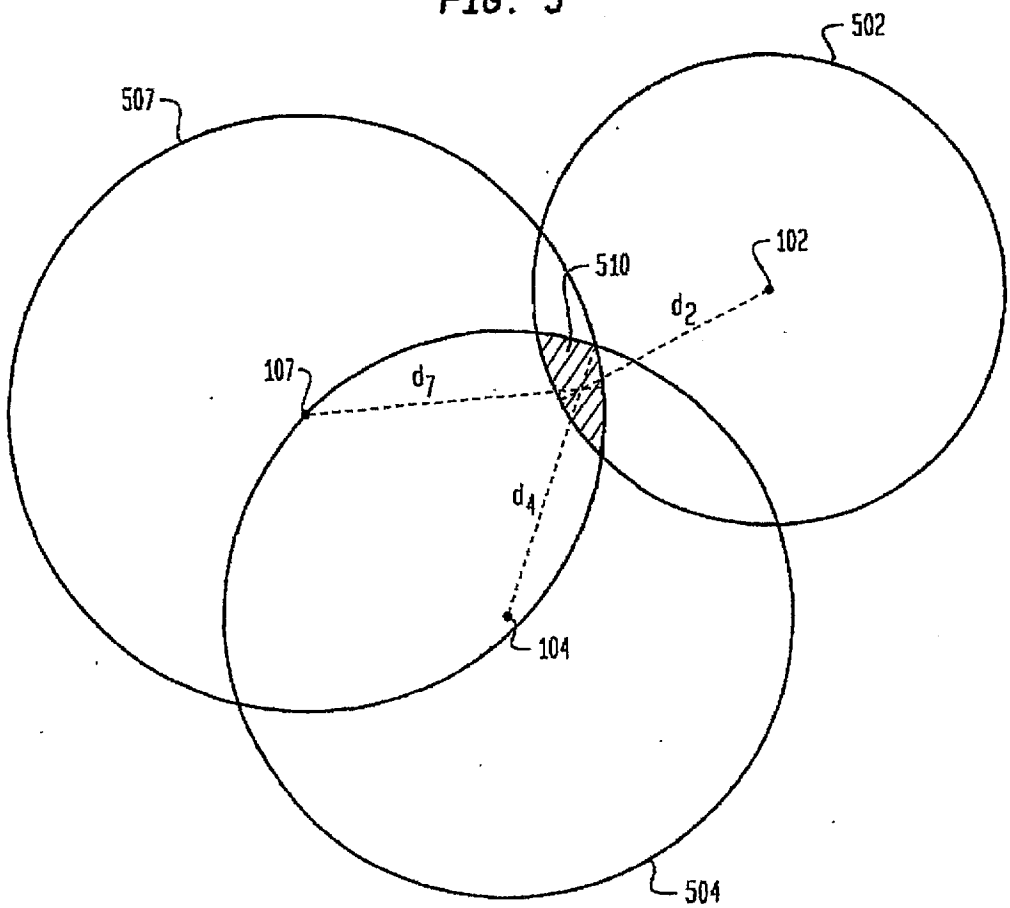

FIG. 6

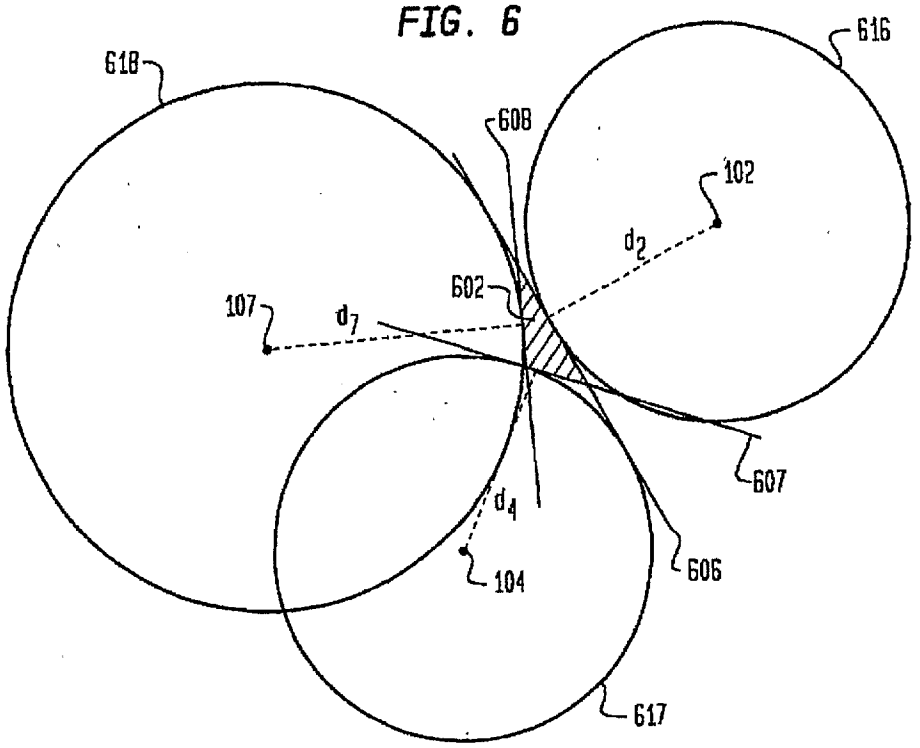
618
616
608
102
d_2
602
107
d_7
607
d_4
606
104
617

FIG. 7

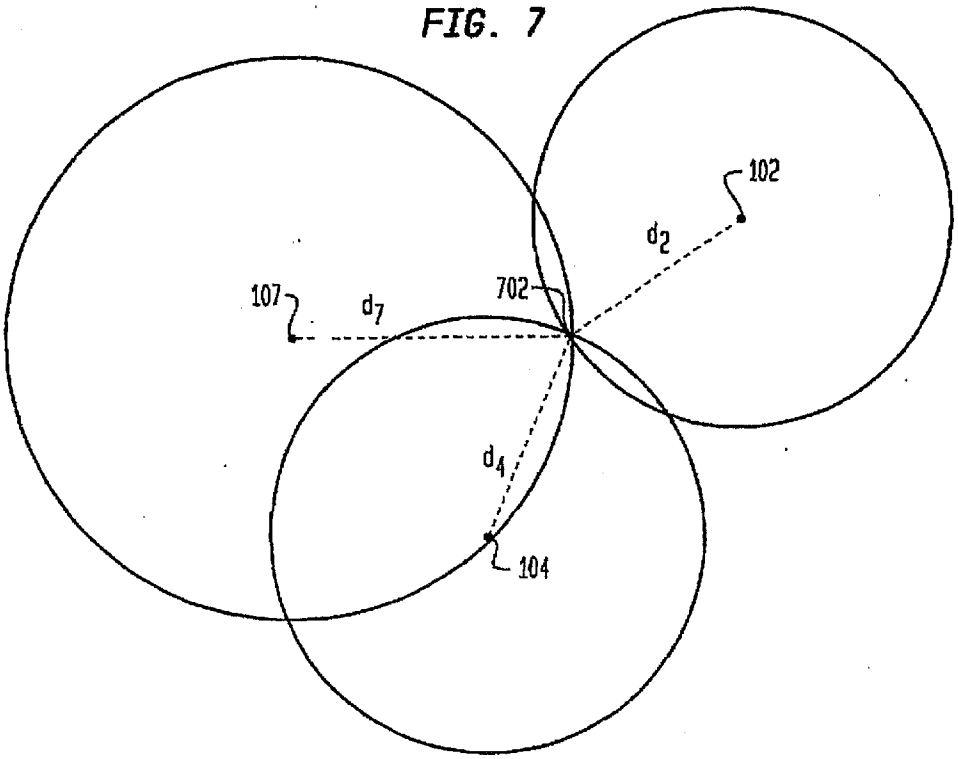
102
d_2
702
107
d_7
d_4
104

FIG. 8

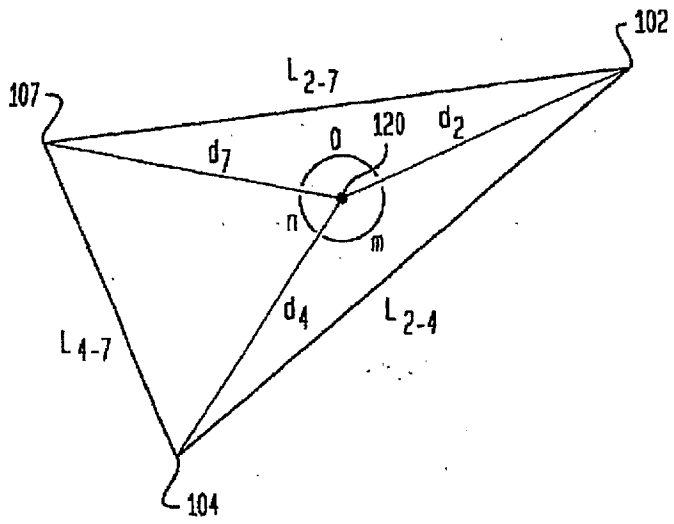
102
107
L_{2-7}
d_7
0
120
d_2
n
m
d_4
L_{2-4}
L_{4-7}
104

FIG. 9

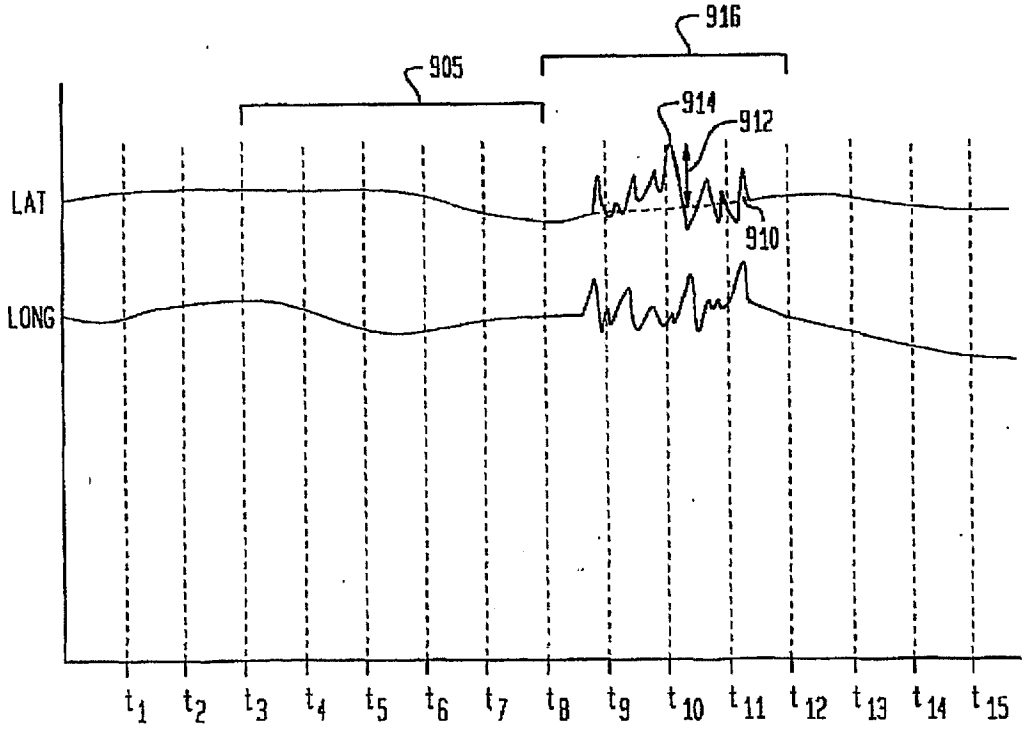
916
905
914
912
910
LAT
LONG
t_1 t_2 t_3 t_4 t_5 t_6 t_7 t_8 t_9 t_{10} t_{11} t_{12} t_{13} t_{14} t_{15}

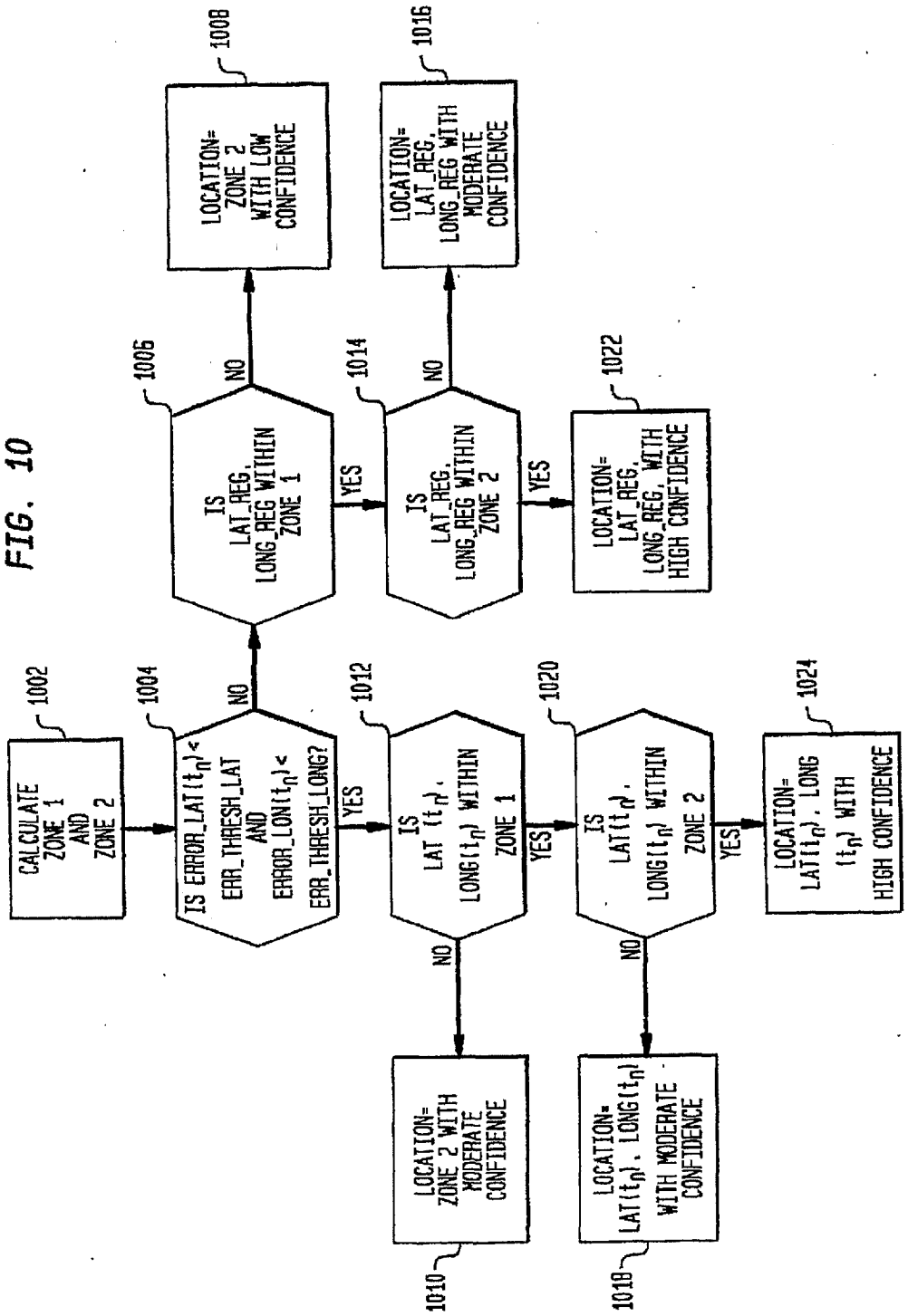
1002
CALCULATE ZONE 1 AND ZONE 2
1004
IS ERROR_LAT(t_n)< ERR_THRESH_LAT AND ERROR_LON(t_n)< ERR_THRESH_LONG?
NO
YES
1006
IS LAT_REG, LONG_REG WITHIN ZONE 1
NO
YES
1008
LOCATION= ZONE 2 WITH LOW CONFIDENCE
1012
IS LAT (t_n), LONG(t_n) WITHIN ZONE 1
NO
YES
1010
LOCATION= ZONE 2 WITH MODERATE CONFIDENCE
1014
IS LAT_REG, LONG_REG WITHIN ZONE 2
NO
YES
1016
LOCATION= LAT_REG, LONG_REG WITH MODERATE CONFIDENCE
1020
IS LAT(t_n), LONG(t_n) WITHIN ZONE 2
NO
YES
1018
LOCATION= LAT(t_n), LONG(t_n) WITH MODERATE CONFIDENCE
1022
LOCATION= LAT_REG, LONG_REG, WITH HIGH CONFIDENCE
1024
LOCATION= LAT(t_n), LONG (t_n) WITH HIGH CONFIDENCE

FIG. 10

FIG. 11

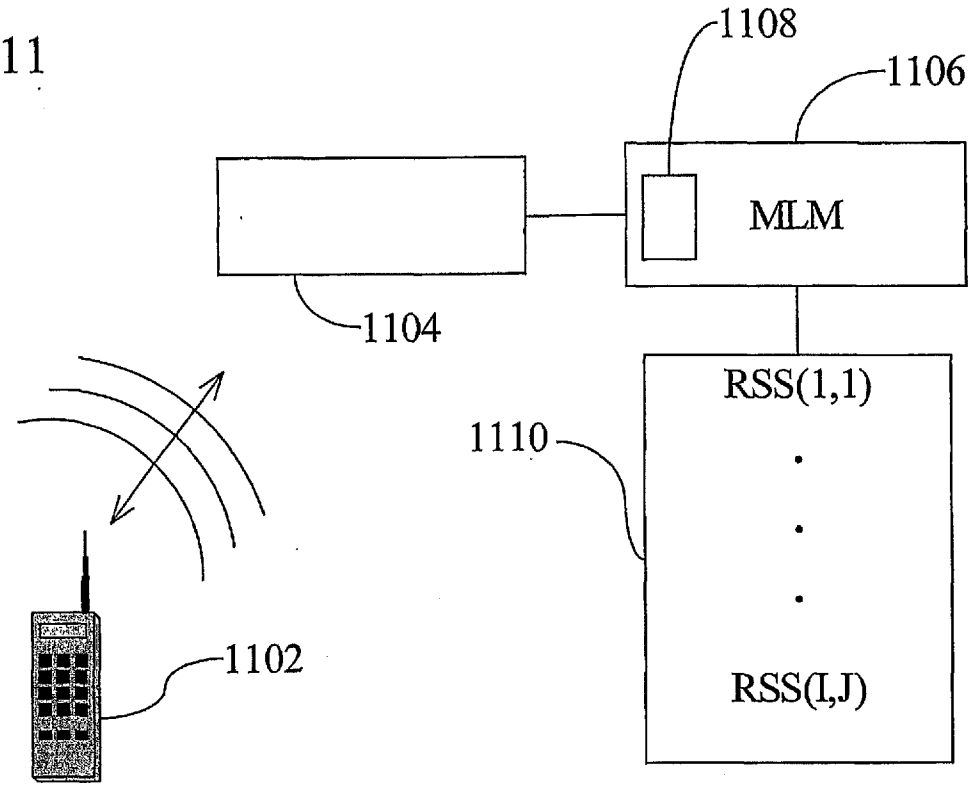
1108
1106
MLM
1104
RSS(1,1)
1110
RSS(I,J)
1102

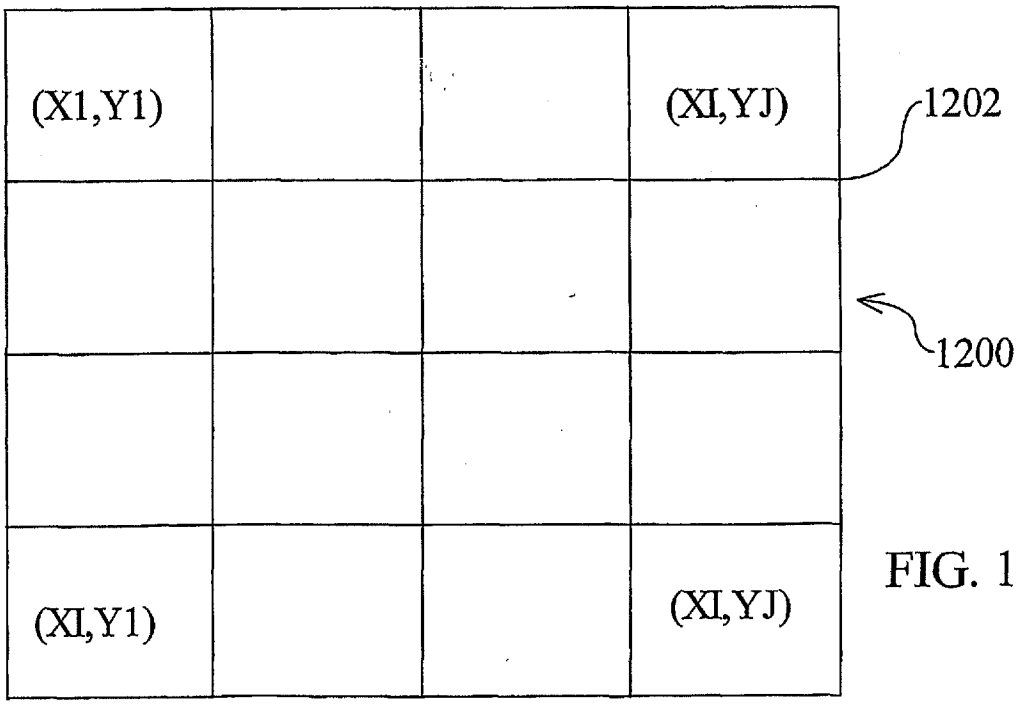
(X1,Y1)
(XI,YJ)
1202
1200
(XI,Y1)
(XI,YJ)

FIG. 12

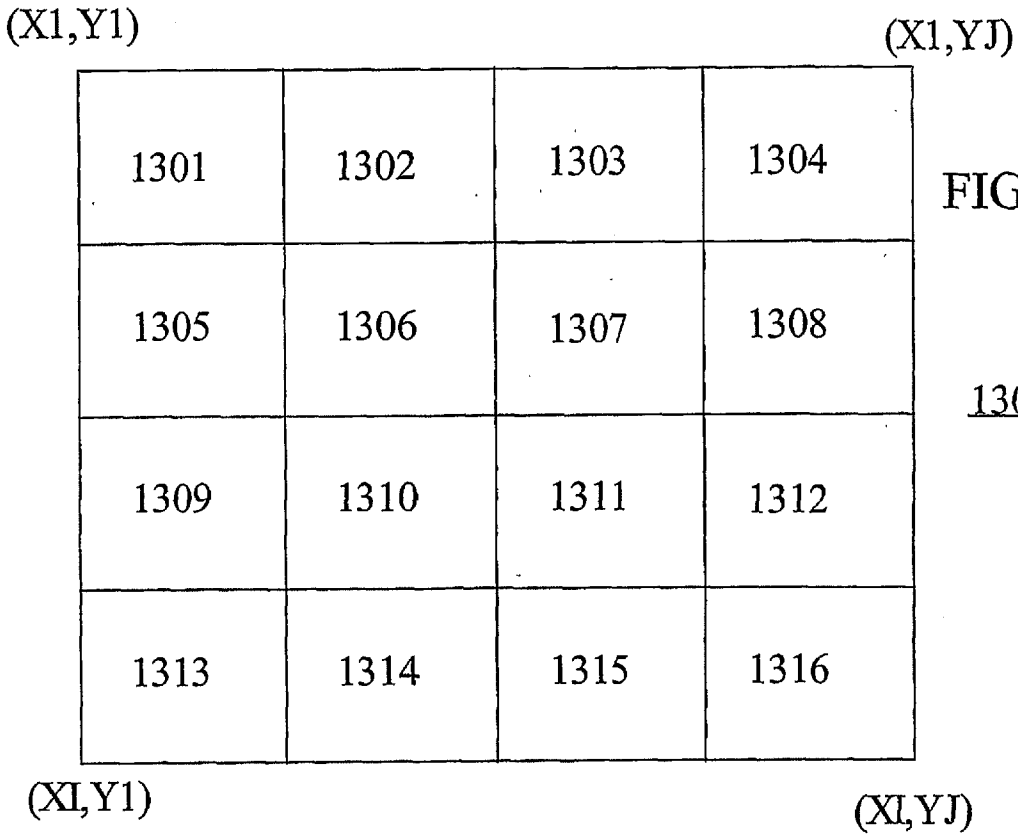
(X1,Y1)
(X1,YJ)
1301
1302
1303
1304
1305
1306
1307
1308
1309
1310
1311
1312
1313
1314
1315
1316
1300
(XI,Y1)
(XI,YJ)

FIG. 13

FIG. 15

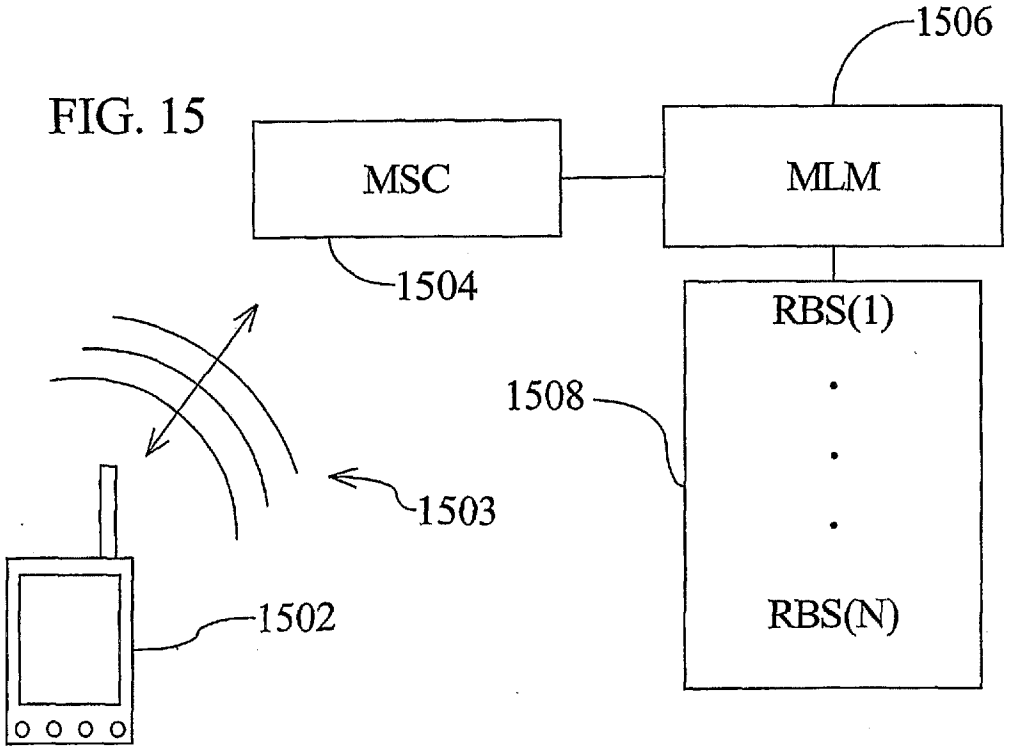
1506
MSC
MLM
1504
RBS(1)
1508
1503
1502
RBS(N)

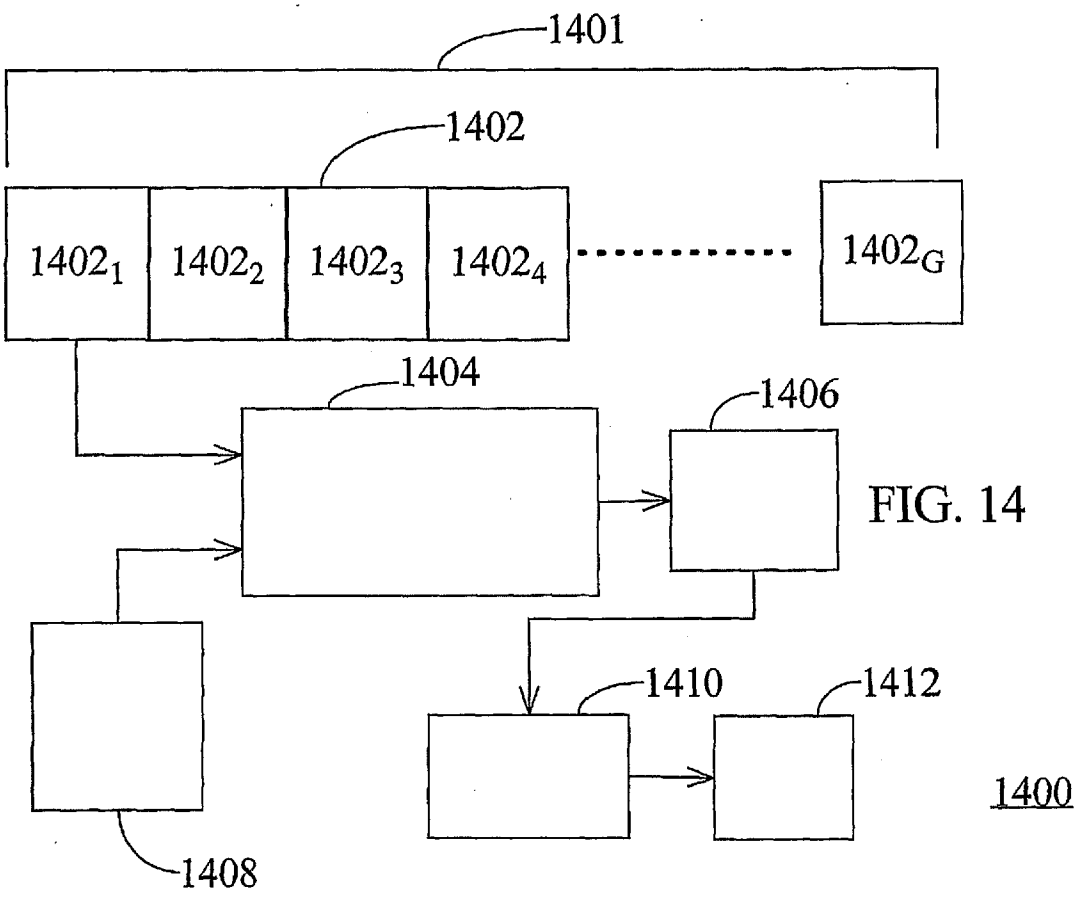
1401
1402
1402₁
1402₂
1402₃
1402₄
1402G
1404
1406
1410
1412
1408
1400

FIG. 14

FIG. 16

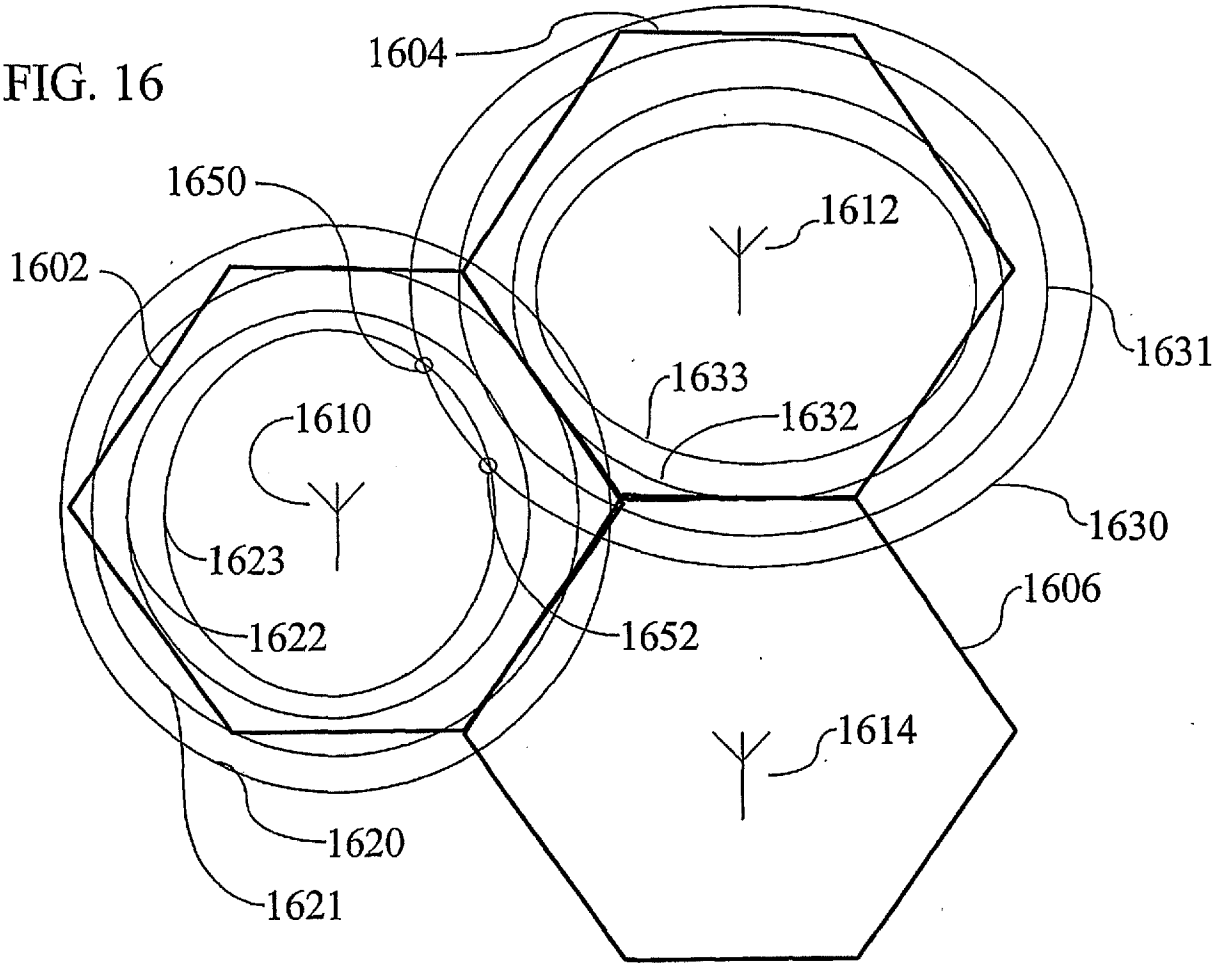
1604
1650
1612
1602
1631
1633
1610
1632
1630
1623
1606
1652
1622
1614
1620
1621

FIG. 17

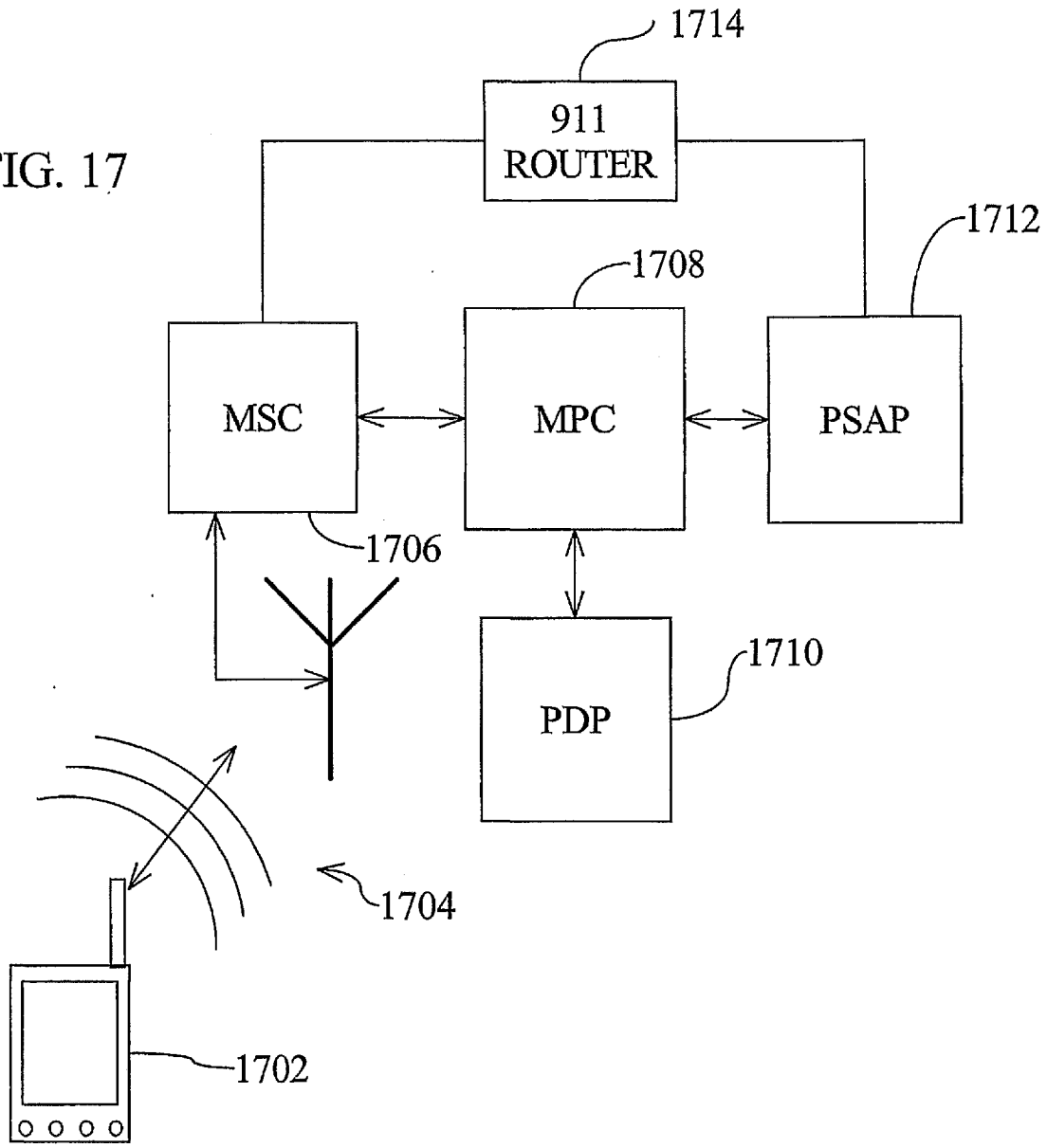
1714
911
ROUTER
1712
1708
MSC
MPC
PSAP
1706
1710
PDP
1704
1702

Electronic Acknowledgement Receipt

EFS ID:	8698327
Application Number:	12424320
International Application Number:	
Confirmation Number:	1334
Title of Invention:	METHOD TO MODIFY CALIBRATION DATA USED TO LOCATE A MOBILE UNIT
First Named Inventor/Applicant Name:	Martin Alles
Customer Number:	79172
Filer:	Mark Charles Comtois/nicola kinney
Filer Authorized By:	Mark Charles Comtois
Attorney Docket Number:	AND01 082 CONT
Receipt Date:	25-OCT-2010
Filing Date:	15-APR-2009
Time Stamp:	18:56:29
Application Type:	Utility under 35 USC 111(a)

Payment information:

Submitted with Payment	no

File Listing:

Document Number	Document Description	File Name	File Size(Bytes)/ Message Digest	Multi Part /.zip	Pages (if appl.)
1	Information Disclosure Statement (IDS) Filed (SB/08)	082CONT_ids.pdf	514360 f28152e3b662cddfdeaad4f62219a30a0297 3eee	no	3

Warnings:

Information:

This is not an USPTO supplied IDS fillable form					
2	Foreign Reference	ep1471688a2.pdf	3853677 86c99d52670ff9918e2cec72c8c91f6cead7f99a	no	22
Warnings:					
Information:					
3	Foreign Reference	wo02082832.pdf	6726020 4d4a7fa1265c71324b529841519dc40c67de89f1	no	46
Warnings:					
Information:					
			Total Files Size (in bytes):	11094057	

This Acknowledgement Receipt evidences receipt on the noted date by the USPTO of the indicated documents, characterized by the applicant, and including page counts, where applicable. It serves as evidence of receipt similar to a Post Card, as described in MPEP 503.

<u>New Applications Under 35 U.S.C. 111</u>
If a new application is being filed and the application includes the necessary components for a filing date (see 37 CFR 1.53(b)-(d) and MPEP 506), a Filing Receipt (37 CFR 1.54) will be issued in due course and the date shown on this Acknowledgement Receipt will establish the filing date of the application.

<u>National Stage of an International Application under 35 U.S.C. 371</u>
If a timely submission to enter the national stage of an international application is compliant with the conditions of 35 U.S.C. 371 and other applicable requirements a Form PCT/DO/EO/903 indicating acceptance of the application as a national stage submission under 35 U.S.C. 371 will be issued in addition to the Filing Receipt, in due course.

<u>New International Application Filed with the USPTO as a Receiving Office</u>
If a new international application is being filed and the international application includes the necessary components for an international filing date (see PCT Article 11 and MPEP 1810), a Notification of the International Application Number and of the International Filing Date (Form PCT/RO/105) will be issued in due course, subject to prescriptions concerning national security, and the date shown on this Acknowledgement Receipt will establish the international filing date of the application.

UNITED STATES PATENT AND TRADEMARK OFFICE

UNITED STATES DEPARTMENT OF COMMERCE
United States Patent and Trademark Office
Address: COMMISSIONER FOR PATENTS
P.O. Box 1450
Alexandria, Virginia 22313-1450
www.uspto.gov

APPLICATION NUMBER	FILING OR 371(C) DATE	FIRST NAMED APPLICANT	ATTY. DOCKET NO./TITLE
12/424,320	04/15/2009	Martin Alles	AND01 082 CONT

CONFIRMATION NO. 1334

PUBLICATION NOTICE

OC000000037337051

79172
Duane Morris LLP
505 9th Street, N.W.
Suite 1000
Washington, DC 20004

Title:METHOD TO MODIFY CALIBRATION DATA USED TO LOCATE A MOBILE UNIT

Publication No.US-2009-0201207-A1
Publication Date:08/13/2009

NOTICE OF PUBLICATION OF APPLICATION

The above-identified application will be electronically published as a patent application publication pursuant to 37 CFR 1.211, et seq. The patent application publication number and publication date are set forth above.

The publication may be accessed through the USPTO's publically available Searchable Databases via the Internet at www.uspto.gov. The direct link to access the publication is currently http://www.uspto.gov/patft/.

The publication process established by the Office does not provide for mailing a copy of the publication to applicant. A copy of the publication may be obtained from the Office upon payment of the appropriate fee set forth in 37 CFR 1.19(a)(1). Orders for copies of patent application publications are handled by the USPTO's Office of Public Records. The Office of Public Records can be reached by telephone at (703) 308-9726 or (800) 972-6382, by facsimile at (703) 305-8759, by mail addressed to the United States Patent and Trademark Office, Office of Public Records, Alexandria, VA 22313-1450 or via the Internet.

In addition, information on the status of the application, including the mailing date of Office actions and the dates of receipt of correspondence filed in the Office, may also be accessed via the Internet through the Patent Electronic Business Center at www.uspto.gov using the public side of the Patent Application Information and Retrieval (PAIR) system. The direct link to access this status information is currently http://pair.uspto.gov/. Prior to publication, such status information is confidential and may only be obtained by applicant using the private side of PAIR.

Further assistance in electronically accessing the publication, or about PAIR, is available by calling the Patent Electronic Business Center at 1-866-217-9197.

Office of Data Managment, Application Assistance Unit (571) 272-4000, or (571) 272-4200, or 1-888-786-0101

1487US
ATTORNEY DOCKET NO. AND01 082 CONT

IN THE UNITED STATES PATENT AND TRADEMARK OFFICE

In re the Patent Application of : Martin ALLES, et al.

Serial No.: 12/424,320 Art Unit: Unassigned

Filed: April 15, 2009 Examiner: Unassigned

Title: **METHOD TO MODIFY CALIBRATION DATA USED TO LOCATE A MOBILE DEVICE**

TRANSMITTAL

Commissioner for Patents
P.O. Box 1450
Alexandria, VA 22313-1450

Sir:

Pursuant to 37 C.F.R. § 1.98(d), copies of foreign references were previously submitted during prosecution of U.S. Patent Application Serial No. 12/026,333, now U.S. Patent No. 7,561,104 of which the subject application is a continuation and claims priority benefit under 35 U.S.C. § 120.

[X] No fee required:

[ ] Filed within three months of filing application, or

[ ] Certification made.

[ ] Filed prior to first Office Action.

No fees are believed to be due with this submission. However, should any fees be required, the Commissioner is hereby authorized to charge such required fees to **Deposit Account No. 04-1679.**

Respectfully submitted,

/mcc/
Mark C. Comtois Reg. No. 46,285

DUANE MORRIS LLP
505 9th Street, N.W., Suite 1000
Washington, D.C. 20004
Telephone: (202) 776-7800
Facsimile: (202) 776-7801
Dated: 15 July 2009

PTO/SB/08a (05-07)
Approved for use through 09/30/2007. OMB 0651-0031
U.S. Patent and Trademark Office; U.S. DEPARTMENT OF COMMERCE
Under the Paperwork Reduction Act of 1995, no persons are required to respond to a collection of information unless it contains a valid OMB control number.

INFORMATION DISCLOSURE STATEMENT BY APPLICANT **(Not for submission under 37 CFR 1.99)**	Application Number	12424320
	Filing Date	2009-04-15
	First Named Inventor	Martin ALLES, et al.
	Art Unit	3661
	Examiner Name	Unassigned
	Attorney Docket Number	AND01 082 CONT

U.S.PATENTS

Examiner Initial*	Cite No	Patent Number	Kind Code[1]	Issue Date	Name of Patentee or Applicant of cited Document	Pages,Columns,Lines where Relevant Passages or Relevant Figures Appear
	1	6871077	B2	2005-03-22	Kennedy	
	2	7298314	B2	2007-11-20	Schantz, et al.	

If you wish to add additional U.S. Patent citation information please click the Add button.

U.S.PATENT APPLICATION PUBLICATIONS

Examiner Initial*	Cite No	Publication Number	Kind Code[1]	Publication Date	Name of Patentee or Applicant of cited Document	Pages,Columns,Lines where Relevant Passages or Relevant Figures Appear
	1	20060030333	A1	2006-02-09	Ward, et al.	
	2	20050243936	A1	2005-11-03	Agrawala, et al.	
	3	20060240843	A1	2006-10-26	Spain, et al.	
	4	20020172223	A1	2002-11-21	Stilp	

INFORMATION DISCLOSURE STATEMENT BY APPLICANT (Not for submission under 37 CFR 1.99)	Application Number	12424320
	Filing Date	2009-04-15
	First Named Inventor	Martin ALLES, et al.
	Art Unit	3661
	Examiner Name	Unassigned
	Attorney Docket Number	AND01 082 CONT

	5	20050093745	A1	2005-05-05	Krumm, et al.	

If you wish to add additional U.S. Published Application citation information please click the Add button.

FOREIGN PATENT DOCUMENTS

Examiner Initial*	Cite No	Foreign Document Number[3]	Country Code[2] i	Kind Code[4]	Publication Date	Name of Patentee or Applicant of cited Document	Pages,Columns,Lines where Relevant Passages or Relevant Figures Appear	T[5]
	1	2000034799	WO	A1	2000-06-15	Hilsenrath, et al.		☐

If you wish to add additional Foreign Patent Document citation information please click the Add button

NON-PATENT LITERATURE DOCUMENTS

Examiner Initials*	Cite No	Include name of the author (in CAPITAL LETTERS), title of the article (when appropriate), title of the item (book, magazine, journal, serial, symposium, catalog, etc), date, pages(s), volume-issue number(s), publisher, city and/or country where published.	T[5]
	1		☐

If you wish to add additional non-patent literature document citation information please click the Add button

EXAMINER SIGNATURE

Examiner Signature		Date Considered	

*EXAMINER: Initial if reference considered, whether or not citation is in conformance with MPEP 609. Draw line through a citation if not in conformance and not considered. Include copy of this form with next communication to applicant.

[1] See Kind Codes of USPTO Patent Documents at www.USPTO.GOV or MPEP 901.04. [2] Enter office that issued the document, by the two-letter code (WIPO Standard ST.3). [3] For Japanese patent documents, the indication of the year of the reign of the Emperor must precede the serial number of the patent document. [4] Kind of document by the appropriate symbols as indicated on the document under WIPO Standard ST.16 if possible. [5] Applicant is to place a check mark here if English language translation is attached.

INFORMATION DISCLOSURE STATEMENT BY APPLICANT (Not for submission under 37 CFR 1.99)		
	Application Number	12424320
	Filing Date	2009-04-15
	First Named Inventor	Martin ALLES, et al.
	Art Unit	3661
	Examiner Name	Unassigned
	Attorney Docket Number	AND01 082 CONT

CERTIFICATION STATEMENT

Please see 37 CFR 1.97 and 1.98 to make the appropriate selection(s):

☐ That each item of information contained in the information disclosure statement was first cited in any communication from a foreign patent office in a counterpart foreign application not more than three months prior to the filing of the information disclosure statement. See 37 CFR 1.97(e)(1).

OR

☐ That no item of information contained in the information disclosure statement was cited in a communication from a foreign patent office in a counterpart foreign application, and, to the knowledge of the person signing the certification after making reasonable inquiry, no item of information contained in the information disclosure statement was known to any individual designated in 37 CFR 1.56(c) more than three months prior to the filing of the information disclosure statement. See 37 CFR 1.97(e)(2).

☐ See attached certification statement.

☐ Fee set forth in 37 CFR 1.17 (p) has been submitted herewith.

☒ None

SIGNATURE

A signature of the applicant or representative is required in accordance with CFR 1.33, 10.18. Please see CFR 1.4(d) for the form of the signature.

Signature	/mcc/	Date (YYYY-MM-DD)	2009-07-15
Name/Print	Mark C. Comtois	Registration Number	46,285

This collection of information is required by 37 CFR 1.97 and 1.98. The information is required to obtain or retain a benefit by the public which is to file (and by the USPTO to process) an application. Confidentiality is governed by 35 U.S.C. 122 and 37 CFR 1.14. This collection is estimated to take 1 hour to complete, including gathering, preparing and submitting the completed application form to the USPTO. Time will vary depending upon the individual case. Any comments on the amount of time you require to complete this form and/or suggestions for reducing this burden, should be sent to the Chief Information Officer, U.S. Patent and Trademark Office, U.S. Department of Commerce, P.O. Box 1450, Alexandria, VA 22313-1450. DO NOT SEND FEES OR COMPLETED FORMS TO THIS ADDRESS. **SEND TO: Commissioner for Patents, P.O. Box 1450, Alexandria, VA 22313-1450.**

Electronic Acknowledgement Receipt

EFS ID:	5708926
Application Number:	12424320
International Application Number:	
Confirmation Number:	1334
Title of Invention:	METHOD TO MODIFY CALIBRATION DATA USED TO LOCATE A MOBILE UNIT
First Named Inventor/Applicant Name:	Martin Alles
Customer Number:	79172
Filer:	Mark Charles Comtois/Jacquetta McBee
Filer Authorized By:	Mark Charles Comtois
Attorney Docket Number:	AND01 082 CONT
Receipt Date:	15-JUL-2009
Filing Date:	15-APR-2009
Time Stamp:	17:02:17
Application Type:	Utility under 35 USC 111(a)

Payment information:

Submitted with Payment	no

File Listing:

Document Number	Document Description	File Name	File Size(Bytes)/ Message Digest	Multi Part /.zip	Pages (if appl.)
1	Information Disclosure Statement (IDS) Filed (SB/08)	AND01_082CONT_IDS.pdf	618006 3ab72305de079057e729a822e9c736727118499 0	no	4

Warnings:

Information:

This is not an USPTO supplied IDS fillable form	
Total Files Size (in bytes):	618006

This Acknowledgement Receipt evidences receipt on the noted date by the USPTO of the indicated documents, characterized by the applicant, and including page counts, where applicable. It serves as evidence of receipt similar to a Post Card, as described in MPEP 503.

New Applications Under 35 U.S.C. 111
If a new application is being filed and the application includes the necessary components for a filing date (see 37 CFR 1.53(b)-(d) and MPEP 506), a Filing Receipt (37 CFR 1.54) will be issued in due course and the date shown on this Acknowledgement Receipt will establish the filing date of the application.

National Stage of an International Application under 35 U.S.C. 371
If a timely submission to enter the national stage of an international application is compliant with the conditions of 35 U.S.C. 371 and other applicable requirements a Form PCT/DO/EO/903 indicating acceptance of the application as a national stage submission under 35 U.S.C. 371 will be issued in addition to the Filing Receipt, in due course.

New International Application Filed with the USPTO as a Receiving Office
If a new international application is being filed and the international application includes the necessary components for an international filing date (see PCT Article 11 and MPEP 1810), a Notification of the International Application Number and of the International Filing Date (Form PCT/RO/105) will be issued in due course, subject to prescriptions concerning national security, and the date shown on this Acknowledgement Receipt will establish the international filing date of the application.

UNITED STATES PATENT AND TRADEMARK OFFICE

UNITED STATES DEPARTMENT OF COMMERCE
United States Patent and Trademark Office
Address: COMMISSIONER FOR PATENTS
P.O. Box 1450
Alexandria, Virginia 22313-1450
www.uspto.gov

APPLICATION NUMBER	FILING or 371(c) DATE	GRP ART UNIT	FIL FEE REC'D	ATTY.DOCKET.NO	TOT CLAIMS	IND CLAIMS
12/424,320	04/15/2009	3661	2974	AND01 082 CONT	52	4

CONFIRMATION NO. 1334

79172
Duane Morris LLP
505 9th Street, N.W.
Suite 1000
Washington, DC 20004

FILING RECEIPT

OC000000035678024

Date Mailed: 05/01/2009

Receipt is acknowledged of this non-provisional patent application. The application will be taken up for examination in due course. Applicant will be notified as to the results of the examination. Any correspondence concerning the application must include the following identification information: the U.S. APPLICATION NUMBER, FILING DATE, NAME OF APPLICANT, and TITLE OF INVENTION. Fees transmitted by check or draft are subject to collection. Please verify the accuracy of the data presented on this receipt. **If an error is noted on this Filing Receipt, please submit a written request for a Filing Receipt Correction. Please provide a copy of this Filing Receipt with the changes noted thereon. If you received a "Notice to File Missing Parts" for this application, please submit any corrections to this Filing Receipt with your reply to the Notice. When the USPTO processes the reply to the Notice, the USPTO will generate another Filing Receipt incorporating the requested corrections**

Applicant(s)

Martin Alles, Vienna, VA;
John Carlson, Dulles, VA;
George Maher, Herndon, VA;
Selcuk Mazlum, Leesburg, VA;

Power of Attorney: The patent practitioners associated with Customer Number 39290

Domestic Priority data as claimed by applicant

This application is a CON of 12/026,333 02/05/2008
which claims benefit of 60/899,379 02/05/2007

Foreign Applications

If Required, Foreign Filing License Granted: 04/27/2009

The country code and number of your priority application, to be used for filing abroad under the Paris Convention, is **US 12/424,320**

Projected Publication Date: 08/13/2009

Non-Publication Request: No

Early Publication Request: No

Title

METHOD TO MODIFY CALIBRATION DATA USED TO LOCATE A MOBILE UNIT

Preliminary Class

701

PROTECTING YOUR INVENTION OUTSIDE THE UNITED STATES

Since the rights granted by a U.S. patent extend only throughout the territory of the United States and have no effect in a foreign country, an inventor who wishes patent protection in another country must apply for a patent in a specific country or in regional patent offices. Applicants may wish to consider the filing of an international application under the Patent Cooperation Treaty (PCT). An international (PCT) application generally has the same effect as a regular national patent application in each PCT-member country. The PCT process **simplifies** the filing of patent applications on the same invention in member countries, but **does not result** in a grant of "an international patent" and does not eliminate the need of applicants to file additional documents and fees in countries where patent protection is desired.

Almost every country has its own patent law, and a person desiring a patent in a particular country must make an application for patent in that country in accordance with its particular laws. Since the laws of many countries differ in various respects from the patent law of the United States, applicants are advised to seek guidance from specific foreign countries to ensure that patent rights are not lost prematurely.

Applicants also are advised that in the case of inventions made in the United States, the Director of the USPTO must issue a license before applicants can apply for a patent in a foreign country. The filing of a U.S. patent application serves as a request for a foreign filing license. The application's filing receipt contains further information and guidance as to the status of applicant's license for foreign filing.

Applicants may wish to consult the USPTO booklet, "General Information Concerning Patents" (specifically, the section entitled "Treaties and Foreign Patents") for more information on timeframes and deadlines for filing foreign patent applications. The guide is available either by contacting the USPTO Contact Center at 800-786-9199, or it can be viewed on the USPTO website at http://www.uspto.gov/web/offices/pac/doc/general/index.html.

For information on preventing theft of your intellectual property (patents, trademarks and copyrights), you may wish to consult the U.S. Government website, http://www.stopfakes.gov. Part of a Department of Commerce initiative, this website includes self-help "toolkits" giving innovators guidance on how to protect intellectual property in specific countries such as China, Korea and Mexico. For questions regarding patent enforcement issues, applicants may call the U.S. Government hotline at 1-866-999-HALT (1-866-999-4158).

LICENSE FOR FOREIGN FILING UNDER

Title 35, United States Code, Section 184

Title 37, Code of Federal Regulations, 5.11 & 5.15

GRANTED

The applicant has been granted a license under 35 U.S.C. 184, if the phrase "IF REQUIRED, FOREIGN FILING LICENSE GRANTED" followed by a date appears on this form. Such licenses are issued in all applications where the conditions for issuance of a license have been met, regardless of whether or not a license may be required as

set forth in 37 CFR 5.15. The scope and limitations of this license are set forth in 37 CFR 5.15(a) unless an earlier license has been issued under 37 CFR 5.15(b). The license is subject to revocation upon written notification. The date indicated is the effective date of the license, unless an earlier license of similar scope has been granted under 37 CFR 5.13 or 5.14.

This license is to be retained by the licensee and may be used at any time on or after the effective date thereof unless it is revoked. This license is automatically transferred to any related applications(s) filed under 37 CFR 1.53(d). This license is not retroactive.

The grant of a license does not in any way lessen the responsibility of a licensee for the security of the subject matter as imposed by any Government contract or the provisions of existing laws relating to espionage and the national security or the export of technical data. Licensees should apprise themselves of current regulations especially with respect to certain countries, of other agencies, particularly the Office of Defense Trade Controls, Department of State (with respect to Arms, Munitions and Implements of War (22 CFR 121-128)); the Bureau of Industry and Security, Department of Commerce (15 CFR parts 730-774); the Office of Foreign AssetsControl, Department of Treasury (31 CFR Parts 500+) and the Department of Energy.

NOT GRANTED

No license under 35 U.S.C. 184 has been granted at this time, if the phrase "IF REQUIRED, FOREIGN FILING LICENSE GRANTED" DOES NOT appear on this form. Applicant may still petition for a license under 37 CFR 5.12, if a license is desired before the expiration of 6 months from the filing date of the application. If 6 months has lapsed from the filing date of this application and the licensee has not received any indication of a secrecy order under 35 U.S.C. 181, the licensee may foreign file the application pursuant to 37 CFR 5.15(b).

PTO/SB/05 (08-08)
Approved for use through 06/30/2010. OMB 0651-0032
U.S. Patent and Trademark Office. U.S. DEPARTMENT OF COMMERCE
Under the Paperwork Reduction Act of 1995, no persons are required to respond to a collection of information unless it displays a valid OMB control number.

UTILITY PATENT APPLICATION TRANSMITTAL

(Only for new nonprovisional applications under 37 CFR 1.53(b))

Attorney Docket No.	AND01 082CONT
First Inventor	Martin ALLES
Title	METHOD TO MODIFY CALIBRATION
Express Mail Label No.	

APPLICATION ELEMENTS

See MPEP chapter 600 concerning utility patent application contents.

1. [✓] **Fee Transmittal Form** (e.g., PTO/SB/17)
2. [ ] **Applicant claims small entity status.** See 37 CFR 1.27.
3. [✓] **Specification** [*Total Pages* 37]
   Both the claims and abstract must start on a new page
   (For information on the preferred arrangement, see MPEP 608.01(a))
4. [✓] **Drawing(s)** (*35 U.S.C. 113*) [*Total Sheets* 10]
5. **Oath or Declaration** [*Total Sheets* _____]
   a. [ ] Newly executed (original or copy)
   b. [✓] A copy from a prior application (37 CFR 1.63(d))
   (for continuation/divisional with Box 18 completed)
   i. [ ] DELETION OF INVENTOR(S)
   Signed statement attached deleting inventor(s) name in the prior application, see 37 CFR 1.63(d)(2) and 1.33(b).
6. [ ] **Application Data Sheet.** See 37 CFR 1.76
7. [ ] **CD-ROM or CD-R** in duplicate, large table or Computer Program *(Appendix)*
   [ ] Landscape Table on CD
8. **Nucleotide and/or Amino Acid Sequence Submission** *(if applicable, items a. – c. are required)*
   a. [ ] Computer Readable Form (CRF)
   b. Specification Sequence Listing on:
      i. [ ] CD-ROM or CD-R (2 copies); or
      ii. [ ] Paper
   c. [ ] Statements verifying identity of above copies

ADDRESS TO: **Commissioner for Patents**
P.O. Box 1450
Alexandria VA 22313-1450

ACCOMPANYING APPLICATION PARTS

9. [ ] **Assignment Papers** (cover sheet & document(s))
   Name of Assignee _____
10. [ ] **37 CFR 3.73(b) Statement** *(when there is an assignee)* [ ] **Power of Attorney**
11. [ ] **English Translation Document** *(if applicable)*
12. [ ] **Information Disclosure Statement** (PTO/SB/08 or PTO-1449)
    [ ] Copies of citations attached
13. [✓] **Preliminary Amendment**
14. [ ] **Return Receipt Postcard** (MPEP 503)
    (*Should be specifically itemized)*
15. [ ] **Certified Copy of Priority Document(s)**
    (if foreign priority is claimed)
16. [ ] **Nonpublication Request** under 35 U.S.C. 122(b)(2)(B)(i). Applicant must attach form PTO/SB/35 or equivalent.
17. [ ] Other: _____

18. If a CONTINUING APPLICATION, *check appropriate box, and supply the requisite information below and in the first sentence of the specification following the title, or in an Application Data Sheet under 37 CFR 1.76:*

[✓] Continuation [ ] Divisional [ ] Continuation-in-part (CIP) of prior application No.: 12/026,333

Prior application information: *Examiner* Dao L. Phan *Art Unit:* 3662

19. CORRESPONDENCE ADDRESS

[✓] The address associated with Customer Number: 79172 *OR* [ ] Correspondence address below

Name					
Address					
City		State		Zip Code	
Country		Telephone		Email	

Signature	/mcc/	Date	15 April 2009
Name (Print/Type)	Mark C. Comtois	Registration No. (Attorney/Agent)	46,285

This collection of information is required by 37 CFR 1.53(b). The information is required to obtain or retain a benefit by the public which is to file (and by the USPTO to process) an application. Confidentiality is governed by 35 U.S.C. 122 and 37 CFR 1.11 and 1.14. This collection is estimated to take 12 minutes to complete, including gathering, preparing, and submitting the completed application form to the USPTO. Time will vary depending upon the individual case. Any comments on the amount of time you require to complete this form and/or suggestions for reducing this burden, should be sent to the Chief Information Officer, U.S. Patent and Trademark Office, U.S. Department of Commerce, P.O. Box 1450, Alexandria, VA 22313-1450. DO NOT SEND FEES OR COMPLETED FORMS TO THIS ADDRESS. **SEND TO: Commissioner for Patents, P.O. Box 1450, Alexandria, VA 22313-1450.**
If you need assistance in completing the form, call 1-800-PTO-9199 and select option 2.

PTO/SB/17 (10-08)
Approved for use through 06/30/2010. OMB 0651-0032
U.S. Patent and Trademark Office; U.S. DEPARTMENT OF COMMERCE
Under the Paperwork Reduction Act of 1995 no persons are required to respond to a collection of information unless it displays a valid OMB control number

Effective on 12/08/2004.
Fees pursuant to the Consolidated Appropriations Act, 2005 (H.R. 4818).

FEE TRANSMITTAL
For FY 2009

☐ Applicant claims small entity status. See 37 CFR 1.27

TOTAL AMOUNT OF PAYMENT ($)

Complete if Known	
Application Number	New Continuation Application
Filing Date	15 April 2009
First Named Inventor	Martin ALLES
Examiner Name	Unassigned
Art Unit	Unassigned
Attorney Docket No.	AND01 082 CONT

METHOD OF PAYMENT (check all that apply)

☐ Check ☐ Credit Card ☐ Money Order ☐ None ☐ Other (please identify): _____

☑ Deposit Account Deposit Account Number: 04-1679 Deposit Account Name: Duane Morris LLP

For the above-identified deposit account, the Director is hereby authorized to: (check all that apply)

☑ Charge fee(s) indicated below ☐ Charge fee(s) indicated below, **except for the filing fee**

☑ Charge any additional fee(s) or underpayments of fee(s) under 37 CFR 1.16 and 1.17 ☑ Credit any overpayments

WARNING: Information on this form may become public. Credit card information should not be included on this form. Provide credit card information and authorization on PTO-2038.

FEE CALCULATION

1. BASIC FILING, SEARCH, AND EXAMINATION FEES

	FILING FEES		SEARCH FEES		EXAMINATION FEES		
Application Type	**Fee ($)**	**Small Entity Fee ($)**	**Fee ($)**	**Small Entity Fee ($)**	**Fee ($)**	**Small Entity Fee ($)**	**Fees Paid ($)**
Utility	330	165	540	270	220	110	1,090.00
Design	220	110	100	50	140	70	
Plant	220	110	330	165	170	85	
Reissue	330	165	540	270	650	325	
Provisional	220	110	0	0	0	0	

2. EXCESS CLAIM FEES

Fee Description	**Fee ($)**	**Small Entity Fee ($)**
Each claim over 20 (including Reissues)	52	26
Each independent claim over 3 (including Reissues)	220	110
Multiple dependent claims	390	195

Total Claims 52 - 20 or HP = **Extra Claims** 32 x **Fee ($)** 52.00 = **Fee Paid ($)** 1,664.00

HP = highest number of total claims paid for, if greater than 20.

Indep. Claims 4 - 3 or HP = **Extra Claims** 1 x **Fee ($)** 220.00 = **Fee Paid ($)** 220.00

HP = highest number of independent claims paid for, if greater than 3.

Multiple Dependent Claims **Fee ($)** _____ **Fee Paid ($)** _____

3. APPLICATION SIZE FEE

If the specification and drawings exceed 100 sheets of paper (excluding electronically filed sequence or computer listings under 37 CFR 1.52(e)), the application size fee due is $270 ($135 for small entity) for each additional 50 sheets or fraction thereof. See 35 U.S.C. 41(a)(1)(G) and 37 CFR 1.16(s).

Total Sheets 47 - 100 = **Extra Sheets** 0 / 50 = **Number of each additional 50 or fraction thereof** 0 (round **up** to a whole number) x **Fee ($)** 0.00 = **Fee Paid ($)** 0.00

4. OTHER FEE(S) **Fees Paid ($)**

Non-English Specification, $130 fee (no small entity discount) _____

Other (e.g., late filing surcharge): _____ _____

SUBMITTED BY

Signature	/mcc/	Registration No. (Attorney/Agent) 46,285	Telephone 202-776-7800
Name (Print/Type)	Mark C. Comtois		Date 15 April 2009

This collection of information is required by 37 CFR 1.136. The information is required to obtain or retain a benefit by the public which is to file (and by the USPTO to process) an application. Confidentiality is governed by 35 U.S.C. 122 and 37 CFR 1.14. This collection is estimated to take 30 minutes to complete, including gathering, preparing, and submitting the completed application form to the USPTO. Time will vary depending upon the individual case. Any comments on the amount of time you require to complete this form and/or suggestions for reducing this burden, should be sent to the Chief Information Officer, U.S. Patent and Trademark Office, U.S. Department of Commerce, P.O. Box 1450, Alexandria, VA 22313-1450. DO NOT SEND FEES OR COMPLETED FORMS TO THIS ADDRESS. **SEND TO: Commissioner for Patents, P.O. Box 1450, Alexandria, VA 22313-1450.**

If you need assistance in completing the form, call 1-800-PTO-9199 and select option 2.

UNITED STATES PATENT APPLICATION

of

MARTIN ALLES

JOHN CARLSON

GEORGE MAHER

and

SELCUK MAZLUM

for

METHOD TO MODIFY CALIBRATION DATA USED TO LOCATE A MOBILE UNIT

CROSS REFERENCES

[0001] The present application is related to provisional application No. 60/899,379 entitled "Mobile Location Using Network Measurement Reports" filed on February 5, 2007, which is hereby incorporated by reference in its entirety.

BACKGROUND

[0002] The use of wireless communication devices such as telephones, pagers, personal digital assistants, laptop computers, etc., hereinafter referred to collectively as "mobile appliances" or "mobiles stations" has become prevalent in today's society. In recent years, at the urging of public safety groups, there has been increased interest in technology which can determine the geographic position or "geo-locate" a mobile station in certain circumstances.

[0003] Estimating the location or "geo-locating" a mobile station may require one or more types of calibration data associated with the mobile station (*e.g.,* signal strength, round trip time, time difference of arrival (TDOA), etc.). Calibration data is typically collected in an outdoor environment. The primary reason for collecting calibration data outdoors is the greater ease of performing automated calibration collection procedures or, in some instances, manual collection procedures along roads. It is more time-consuming to perform calibration procedures indoors due to the required access to buildings and the inability to utilize automated collection procedures designed for outdoor environments.

[0004] When a wireless device is located indoors, the signal strengths of signals received from the serving and/or neighboring base stations tend to be lower than the

strength of the signals received by a wireless device located outdoors. As a result of these lower signal strengths, performing comparisons between the received signal strengths of the indoor wireless device and signal strength data stored in a calibration database may result in a poor estimated location accuracy. Modifying the calibration data obtained outdoors may provide a way to simulate indoor calibration data characteristics. Calibration data collected in areas located adjacent to indoor facilities may be altered to increase the accuracy of location estimates of a mobile station located indoors.

[0005] One embodiment of the present subject matter is a method for determining a location of a mobile station. The method includes providing a database of previously-gathered calibration data for a predetermined region in a wireless network and collecting observed network measurement data. The method also includes modifying the observed network measurements and then comparing the modified data with the database of calibration data to determine the location of the mobile station.

[0006] Another embodiment of the present subject matter is a system for determining a location of a mobile station. The system includes a database of previously-gathered calibration data for a region in a wireless network and circuitry such as a wireless receiver for collecting observed network measurement data. The system includes circuitry, such as a processor, for modifying the observed network measurement data; and circuitry, such as a processor, for comparing the modified data with the calibration data in the database to determine the location of the mobile station.

[0007] Yet another embodiment of the present subject matter is a method for determining a location of a mobile station. The method includes providing a database of

previously-gathered calibration data for a region in a wireless network which includes a serving transmitter. The method collects observed network measurement data including a first network characteristic from said serving transmitter and modifies the observed network measurement data using said first characteristic. The method compares the modified network measurement data with the database of calibration data to thereby determine the location of the mobile station.

[0008] Still yet another embodiment of the present subject matter is a method for determining a location of a mobile station. The method includes providing a database of previously-gathered calibration data for a region in a wireless network including a first transmitter and a second transmitter. The method also includes collecting observed network measurement data including a first and second signal characteristic from the first and second transmitters respectively and determining which of the first and second signal characteristics has a greater magnitude. The observed network measurement data may be modified using the greater magnitude signal characteristic, and the modified network measurement data may be compared with the database of calibration data to determine the location of the mobile station.

[0009] A further embodiment of the present subject matter is a method for determining a location of a mobile station. The method includes providing a database of previously-gathered calibration data for a region in a wireless network and collecting observed network measurement data from a plurality of transmitters which includes a signal characteristic from each one of said plural transmitters. The method also includes determining an average value for the signal characteristics and modifying the observed

network measurement data using the average value. The method may then compare the modified network measurement data with the database of calibration data to determine the location of the mobile station.

[0010] Still a further embodiment of the present subject matter recognizes that it may be desirable to locate a mobile station by obtaining at least one network measurement report representing at least one first signal characteristic of the mobile station's serving base station, and at least one second and third signal characteristics of neighboring base stations. The method may also compute the difference between the at least one first signal characteristic of the mobile station's serving base station and the at least one second signal characteristic of at least one of the neighboring base stations to determine a first solution and determine which neighboring base station has the highest signal power level at a particular location. The difference between the highest signal power and the power levels of the serving base station and the remaining neighboring base stations may be computed to determine a second solution. It may also be determined which neighboring base station has the lowest signal power level at the particular location. The method may also comprise computing an average signal power level intermediary to the difference between the highest signal power level and the lowest signal power level to determine a third solution and determining which of the three solutions is a most optimal solution based on at least one comparison of the three solutions. At least one signal characteristic of the network measurement report may be adjusted based on the most optimal solution and the modified network measurement report may be utilized to locate a mobile station.

[0011] Another embodiment of the present subject matter is a method for determining a location of a mobile station. The method includes providing a database of previously-gathered outdoor calibration data for a region in a wireless network, collecting network measurement data, and comparing the network measurement data with the database of calibration data to thereby determine several location estimates of the mobile station. The method may also include determining a confidence measure for each of the plurality of location estimates and determining the location of the mobile station based on the plurality of location estimates and their respective confidence measures.

[0012] These and other advantages of the disclosed subject matter over the prior art will be readily apparent to one skilled in the art to which the disclosure pertains from a perusal of the claims, the appended drawings, and the following detailed description of the preferred embodiments.

BRIEF DESCRIPTION OF THE DRAWINGS

[0013] FIG. 1 illustrates a wireless communications networking environment.

[0014] FIG. 2 illustrates a flow diagram of an exemplary inventive concept.

[0015] FIG. 3 illustrates a flow diagram of another exemplary inventive concept.

[0016] FIG. 4 illustrates a flow diagram of yet another exemplary inventive concept.

[0017] FIG. 5 illustrates a flow diagram of still another exemplary inventive concept.

[0018] FIG. 6 illustrates a flow diagram of still yet another exemplary inventive concept.

[0019] FIG. 7 illustrates a flow diagram of an embodiment of the subject matter.

[0020] FIG. 8 illustrates a flow diagram of another embodiment of the subject matter.

[0021] FIG. 9 illustrates a flow diagram of another embodiment of the subject matter.

[0022] FIG. 10 illustrates a flow diagram of another embodiment of the subject matter.

DETAILED DESCRIPTION

[0023] Calibration data samples obtained outdoors may be used to simulate indoor calibration data to locate a mobile station (MS) in an indoor facility. A method of utilizing calibration data samples to represent indoor and/or outdoor wireless networking environments is described herein.

[0024] Reliably locating a mobile station located indoors, even when the calibration data has been obtained in an outdoor environment, may simplify a calibration collection procedure. Calibration data obtained outdoors may be modified and substituted for indoor calibration data. In addition network measurement data may be modified for comparison with the outdoor calibration data.

[0025] In general, a non-uniform grid point (NUG) may represent the signal characteristics and/or calibration data over a given region. As illustrated in FIG. 1, a set

of NUGs (NUG1, NUG2 and NUG3) are shown as being a part of a larger geographical region (R), which includes various wireless networking components (*e.g.,* (MS 11 and BS 20 - NUG1), (MSs 12-15 - NUG2) and (MSs 16-18 and BS 30 - NUG3)). The NUGs represent an area of collected calibration data, which may be stored in a database for easy retrieval during a calibration data comparison operation between the NUG and a received network measurement report (NMR).

[0026] Calibration data may be obtained from data collection devices during field test operations, and/or from MSs or other communication devices within the general area of the NUG. Cross-NUG communications may occur between MSs and/or BSs located within communication range of one or more of the NUGs. For example, BS 10 may be located outside the region (R) and may communicate with one or more devices located in the various NUGs 1-3. The different NUGs 1-3 may be separately defined by a variety of parameters. For example, geographical areas (*e.g.,* mountains, buildings, roads) may be a factor in deciding the boundaries of a NUG. Additionally, varying concentrations of MSs may be another factor that separates one NUG from another.

[0027] Network measurement reports (NMRs) may be used to represent network characteristics at particular locations within a given region (R). Any point located within a NUG may have corresponding signal strength levels that represent the signal power of the serving and/or neighboring cell (NC) BSs. An exemplary NMR may be represented by example_data_vector = [P1, P2, P3, TA1]. Referring to FIG. 1, the power level signals (P1-P3) may represent the power levels of the three BSs 10, 20 and 30, as measured at a particular location. The timing advance parameter TA1 (or equivalent

parameter) may be used to represent timing information of signals transmitted between the MS and one or more BSs.

[0028] The value of the timing advance (TA) parameter corresponds to the length of time a signal from a MS takes to reach a particular BS. A MS may be configured to transmit data signals at specific timeslot intervals depending on the type of wireless communication protocol employed (*e.g.,* TDMA, GSM, 3GPP etc.). Using the speed of light (c = 3*10^8 m/s) as a reference velocity for the radio waves, the TA parameter may be increased or decreased depending on the distance between the MS and the BS. The TA parameter may be periodically adjusted as the distance from the MS to the BS changes. Of course, a NMR may contain any number and type of parameters, and may be used to estimate the location of a MS.

[0029] For example, NMR(s) may be transmitted from the MS or from other wireless communication components to position determining equipment (PDE) 50, which processes the received NMR information and may attempt to locate the position of the MS. NMR(s) may be periodically generated by MSs or other communication devices to calibrate the NUG. The NUG may also be based entirely on information received from NMR(s) generated by MSs located in the NUG.

[0030] The received Network Measurement data (NM data) may be compared to predetermined calibration data representing one or more NUGs to estimate the location of a MS. In a case where NM data is compared against a NUG, like parameters may be compared to estimate if the target MS 18 is within the NUG. Similarly, NUG parameters may be computed in response to a comparison operation, and then compared to the NM

data. Each NUG may have a series of parameters and/or functions characterizing one or more particular locations in the NUG. Given a received set of one or more NMR(s) obtained from some unknown location, an estimate of that unknown location may be calculated using the characterization of the NUG or uniform grid (UG) over that region.

[0031] It may be desirable to use the original unmodified NM data directly without modification when locating a mobile station. Assuming the MS is located in an indoor facility, the data contained in the NMR(s) may be a function of calibration data collected outdoors. In some cases, the unmodified outdoor calibration data used to represent the indoor facility may provide an accurate representation of the location of the target MS 18 (*e.g.,* low distortion structures, open-faced facilities, etc.).

[0032] Referring to FIG. 1, the NM data may be sent from the target MS 18 to the BS 10, where the PDE 50 processes the NMR and performs one or more comparison operations between the NM data and the calibration data of the NUG(s). Once the comparison operation is complete, the location of the target MS 18 may be estimated. A direct comparison of the original NM data may be made against the corresponding NUG(s) characteristics. Alternatively, the NM data may not be modified even if NUG(s) are utilized to estimate the location of the mobile station.

[0033] NM data may also be modified to adjust the power levels received from the serving and/or neighboring cell (NC) base stations. For example, differences in parameters between the serving cell and the NC may be calculated and the quantities used to modify the original NM data.

[0034] If an original NMR received at the PDE 50 had the form NMR1 = [P1, P2, P3, TA1], where P1 is the serving BS power at a particular location, P2 is a first NC power, P3 is a second NC power, and TA1 is the timing advance parameter, the modified NMR may be represented by: NMR_modified = [0, P1-P2, P1-P3, TA1]. The resulting data vector may be used to calculate new relative power levels of the NC BSs by subtracting or adding the NMR_modified parameters from the original NMR1 parameters. In this example, the power of the serving BS may be used as a basis to obtain relative power level modification parameters to modify the NC power level parameters of NMR(s).

[0035] The calculated modified parameters (NMR_modified = [0, P1-P2, P1-P3, TA1]) may also be used to simulate an indoor facility by modifying NMR(s) received from an indoor location. Alternatively, the modified parameters may be used to conduct other calculations to obtain a desired set of modified results. For example, the modified NMR may be compared to one or more of the NUG(s) to provide an estimated location of a MS. Of course, the serving BS power level is not a required parameter to be used as a basis to obtain relative power level modification parameters, and many other parameters may be used to modify the NM data to simulate an indoor facility.

[0036] To further illustrate modification of the NMR, consider a particular implementation where the variable RxLevServing_WD represents the received signal strength of the serving base station's control channel measured by the wireless device at an unknown location. Let RxLevNeigh_i_WD represent the received signal strength of the ith neighbor's control channel, RxLevServing_DB represent the average received

signal strength of the serving station's control channel, stored in a database of the PDE 50 during the calibration process, and RxLevNeigh_i_DB represent the average received signal strength of the ith neighbor's control channel stored in the database during a calibration process (i = 1 to N, where N is the number of neighbor cells reported).

[0037] A comparison operation may be conducted between the received signal strengths of the NC-BSs relative to the serving BS's received signal strength. For example, a comparison may include computing the difference between the parameters of the serving base station and the ith neighbor's parameters (*i.e.*, (RxLevServing_WD - RxLevNeigh_i_WD) and (RxLevServing_DB - RxLevNeigh_i_DB)). Once the differences are calculated, the magnitudes of the differences may be compared to a predetermined threshold value used to distinguish between an acceptable difference value requiring no modification to the NM data and a non-acceptable difference value invoking further modification efforts.

[0038] NM data may be modified by an amount relative to the signal strength of a NC-BS. In this example, the NC-BS having the highest signal power may be used as a basis to modify the values of the NM data. The differences between the NC having the highest cell power and the cell powers of the remaining NC-BSs may be calculated and the quantities thereof used to modify the original NM data.

[0039] An exemplary NMR may have the form NMR = [P1, P2, P3, P4, TA1], where P1 is the serving BS signal power, P2 is a NC having the highest signal power at the intended location of the NMR, P3 and P4 are different NC signal powers, and TA1 is a timing advance parameter. In this example, P2 has the highest signal power level and

may be used as the basis for modifying the parameters of the NMR. The modified NMR may then be represented by NMR_modified2 = [P2-P1, 0, P2-P3, P2-P4, TA1]. The resulting data vector NMR_modified2 may be used to calculate new power levels of the NC base stations by subtracting or adding the NMR_modified2 parameters to the original NMR parameters.

[0040] The modified NMR may be compared to one or more of the NUG(s). In the previous examples, the power of the serving BS and the NC with the highest signal power level were used to obtain the relative power modification quantities. The signal power level of the serving BS and/or the NC having the highest signal power may be used solely to modify the NMR, and may not be included in comparison operations against the NUG(s). If the serving BS power level parameter and/or the NC having the highest signal power level parameter are excluded from the comparison to the NUG(s), the first and/or additional terms of the NMR may be ignored during the comparison operation. Of course, any other parameter may be utilized and the example above including power level should not limit the scope of the claims appended herewith.

[0041] To further illustrate modification of the NMR, consider a particular implementation where the variable RxLevNeigh_h_WD represents the received signal strength of a neighboring BS's control channel (neighbor A) having the highest signal level, as measured by the wireless device. RxLevNeigh_h_WD may be listed first in a measurement report list containing signal strengths sorted in descending order ($h = 1$). Let RxLevNeigh_i_WD represent the received signal strength of the ith neighbor's control channel measured (neighbor i, where $i \neq h$), as by the wireless device, and

RxLevNeigh_h_DB represent the received signal strength of the neighbor (neighbor A) with the highest received signal strength, as measured by the wireless device, and which may be stored in the PDE 50 database during a calibration process. RxLevNeigh_i_DB may be used to represent the received signal strength of the ith neighboring BS's control channel (neighbor i, where $i \neq h$, and $i = 1$ to N, and where N is the number of neighbors reported). RxLevNeigh_i_DB may be stored in the PDE 50 database during a calibration process.

[0042] In this example, correlation may be conducted over the received signal strengths of the NC-BSs relative to the NC-BS having the highest received signal strength, as observed by the wireless device. A comparison may include computing the difference between the parameters of the serving BS and the ith neighbor's parameters (i.e. (RxLevNeigh_h_WD - RxLevNeigh_i_WD) and (RxLevNeigh_h_DB - RxLevNeigh_i_DB)). Comparisons may also be conducted for any one, combination of or all of the measured parameters of the NC-BSs.

[0043] NM data may be modified to adjust the power levels received from the serving and/or neighboring cell (NC) base stations by an amount relative to the average signal strength of one or more NC base stations. Each signal power or parameter component of the NMR may also be modified by an average signal power or parameter level based on one or more of the measured NC signal power levels. The average received signal power level may be calculated a number of different ways, for example, the average of the two highest signal powers, the three highest powers, the average of all (N) signal powers, or an intermediary number between one or more of the measured NC

signal power components. Modifying the original NMR components may include subtracting or adding to the existing NMR power components by an amount based on the calculated average, or other various known functions.

[0044] To further illustrate modification of the NMR, consider a particular implementation where RxLevNeigh_avg_WD represents the average received signal strength based upon a number of control channel signal powers of neighboring BSs, as measured by the wireless device at an unknown location to be estimated. Let RxLevNeigh_i_WD represent the received signal strength of the ith neighbor's control channel signal power, and RxLevNeigh_avg_DB represent the average received signal strength of data stored during calibration, and computed based on the neighboring BSs, as measured by the wireless device and used in computing the average received signal strength. The same neighboring BSs may be used to represent the average received signal strength of the signal power levels received by the wireless device and for the average received signal strength of calibration data stored in the PDE 50 database. Let RxLevNeigh_i_DB represent the received signal strength of the ith neighbor's control channel stored in the PDE 50 database during the calibration process (i = 1 to N, where N is the number of neighbors reported).

[0045] In this example, a comparison may be conducted over the received signal strengths of the neighboring BSs relative to the average received signal strength computed for all neighboring BSs observed by the wireless device (*i.e.*, compare between (RxLevNeigh_avg_WD - RxLevNeigh_i_WD)) and for all neighbors previously measured by the wireless device (*i.e.*, compare between (RxLevNeigh_avg_DB -

RxLevNeigh_i_DB)). The average signal power level observed over all the neighbor signal power levels may be realized in absolute powers (mW) or in relative powers (dBm).

[0046] Any combination of the above NMR modification procedures may be performed to increase the accuracy of mobile station location estimates. Further, any number of or type of parameters may be utilized in any of the aforementioned procedures and the exemplary parameters of power level, signal strength, etc. should not limit the scope of the claims appended wherewith. Certain factors impacting the modification procedure selection process may include the specific type of cellular technology, the geographical terrain and/or environmental conditions, etc. Further, the present subject matter acknowledges that some NMR modification procedures may be best suited for outdoor location estimation, while others are better suited for indoor location estimation, and some even may be best for mixed (indoor & outdoor) location estimation.

[0047] For example, if the serving BS for a mobile station is known to be in an area where there are no buildings or obstructions then it may be prudent to leave the NM data unmodified or select the NMR modification procedure where the serving base station is used as the basis to calculate NMR modifications. Further, if the serving cell is in a geographical area with known large obstructions (*e.g.,* buildings, mountains etc.) then it may be prudent to use the NMR modification procedure that selects the NC base station having the highest signal power as the basis to calculate NMR modifications. Additionally, if the serving cell is in an area containing both outdoor and indoor facilities,

then it may be best to use the average of more than one NC signal power value as the basis to modify the NMR(s).

[0048] Regardless of the type of modification algorithm selected to modify the NM data, a margin of error may still be present when attempting to determine the precise location of a mobile station. Determining the amount of location error may be useful when estimating the likelihood of accurately locating a mobile station. A confidence measure may also be used to represent the accuracy of a mobile station's estimated location.

[0049] The value of a confidence measure may vary depending on the estimated accuracy of the location estimated. If estimated locations derived from mapping NM data to a given location, whether using a NUG or other form of a data source for comparison purposes, agree under any or all combinations, the respective confidence measure "C" may be considered high. A confidence measure may also be represented as a function that increases as the quantity of measured data correctly matches data associated with a final estimated location. An exemplary confidence measure or function may be represented as a fraction of all locations that are similar to the final estimated location, however, such an example should not limit the scope of the claims appended herewith.

[0050] After one or more of the data modification procedures have been calculated, respective confidence measures may be calculated to represent the likely accuracy of the modification procedures. Confidence measures may then be compared and the best one selected to represent the appropriate modification procedure to implement.

[0051] Certain estimated locations may be assigned weights by using a confidence measure as a weight to represent the probability of locating a mobile station at a given location. For example, confidence measures may be based on one or more calculated parameters, including, but not limited to: a probability density function (PDF), a joint PDF, Mahalanobis distance, distortion measure, ordered number parameter, timing advance (TA) parameter, mobile orientation etc. The calculated parameters may be derived from the NUG calibration data stored in the PDE 50 database. The parameters may be pre-stored in memory or may be calculated during a NMR to NUG comparison operation.

[0052] Probability density functions may be calculated based on an individual NC base station power level, or a set of multiple NC base station power levels. The calculated probability density function may be compared to the set of available NUGs (*i.e.,* NUGS 1-3 of FIG. 1) to determine a probability that the NM data matches a particular NUG location. A joint probability may also be calculated over a set of probabilities to further estimate the location of the mobile station. The results of the calculated PDF may be used in a number of estimation techniques to locate the mobile station.

[0053] Distortion measures may be determined at a particular location may be included in a NMR and used in a comparison operation to measure the difference in distortion between NUG data and NM data. The distortion measures may be used to estimate a location of a mobile station based on the results of the comparison.

[0054] A Mahalanobis distance may be an exemplary distortion measure and may utilized to assist in identifying and analyzing different patterns in a wireless communications environment. The Mahalanobis distance may also be useful in determining similarities between an unknown sample data set and a known data set.

[0055] Ordering number lists may also be used to organize parameters for comparison purposes. An ordering number list may be a list or table of data parameters organized in a particular order. The power levels may be listed in descending order and compared to similar parameters associated with a NUG(s). A threshold power level may be used to represent an acceptable amount of deviation between a comparison of power levels obtained from a NMR(s) and/or a NUG(s). If one or more power levels in the NMR(s) and the NUG(s) fall within an acceptable range of one another, the location of a mobile station may be measured with a corresponding degree of accuracy.

[0056] Each generated NMR may be used to provide an individual estimate of the mobile station's location. The PDE 50 may receive a number of NMRs over a period of time, a corresponding number of location estimates may be generated based on the number of NMRs received. These estimates may be combined in a statistical algorithm and may provide a more accurate location estimate than the individual NMRs.

[0057] Given a particular NMR or set of NMR(s) containing data collected outdoors, a selection procedure may be conducted to select the most appropriate modification procedure to use when modifying the NM data. Once one or more of the above described NMR modification procedures have been calculated, (*e.g.,* non-modification, serving cell power level, highest NC power level, average(s) of the NC

power levels, etc.) one or more of these calculations may be selected as an optimal solution to be used to modify the NMR.

[0058] One way to determine the optimal solution that should be used to modify the NMR is to calculate a confidence measure for each of the calculated modification procedures. Once the confidence measures have been calculated, the optimal solution may be selected as the modification procedure with the highest confidence measure. Alternatively, a location estimate may be made by weighting the individual solutions by the applicable confidence measure and combining the results into a single NMR solution.

[0059] Combining multiple NMR(s) may generate a location estimate with increased accuracy. When comparing NM data to a NUG, the grid point data that most closely matches the NM data may become the estimated location of the mobile station. In an alternative arrangement, interpolation may be used for determining a location that falls between two grid points to provide an even more accurate location estimate. Applying probabilistic weights, hypotheses and deriving confidence measures may increase the accuracy of the location estimates. Utilizing exemplary probabilistic measures, the estimated location of a mobile station may be determined within a particular degree of certainty. A similar approach may also be applied to select the appropriate NMR modification procedure to accommodate for varying conditions and other operational variables (*e.g.,* different air standards, varying environmental circumstances, etc.).

[0060] FIG. 2 illustrates a flow diagram 200 of a method to locate a mobile station. Observed network measurement data may be collected (operation 201). The observed

data would typically be the same or similar to the data in a network measurement report (NMR). The network measurement data represents at least one network characteristic observed by the mobile station operating at a particular location within a region. The NM data may be compared to calibration database data, where the calibration database data represents calibration data measured within the geographical area of the region (operation 202). The location of the mobile station may be estimated based on the comparison of the modified network measurement data and the calibration database data (operation 203).

[0061] FIG. 3 illustrates a flow diagram 300 of a method to locate a mobile station in an indoor environment. Calibration data samples are collected in an outdoor environment (operation 301). At least one attenuation variable may be applied to the calibration data sample to simulate an indoor environment (operation 302). The modified network measurement data sample may be applied to a mobile station location algorithm (operation 303). The mobile station may be then located in the indoor environment based on the mobile station location algorithm implementing the at least one modified calibration sample (operation 304).

[0062] FIG. 4 illustrates a flow diagram 400 of a method to locate a mobile station. NM data may be obtained to represent at least one network characteristic of the mobile station's serving base station and at least one second network characteristic of at least one of the mobile station's neighboring base stations (operation 401). The difference between the at least one first signal characteristic and the at least one second signal characteristic may be computed (operation 402). At least one signal characteristic of the

NM data may be adjusted based on the computed difference (operation 403). The mobile station may be then located based on the modified network measurement data (operation 404).

[0063] FIG. 5 illustrates a flow diagram 500 of a method to locate a mobile station. NM data may be obtained (operation 501), which represents at least one first network characteristic of the mobile station's serving base station, and at least one second and third network characteristic of the mobile station's at least two neighboring base stations. It may be then determined which base station has the highest signal power at a particular location (operation 502). The difference between the highest signal power at the particular location and the power levels at the particular location of the serving base station and the remaining neighboring base stations may be determined (operation 503). At least one signal characteristic of the NM data may be adjusted based on the computed differences (operation 504). The mobile station may then be located based on the modified NMR (operation 505).

[0064] FIG. 6 illustrates a flow diagram 600 of a method to locate a mobile station. A NMR may be obtained (operation 601), which represents at least one first signal characteristic of the mobile station's serving base station, and at least one second and third signal characteristics of the mobile station's at least two respective neighboring base stations. A difference may be computed between the at least one first signal characteristic of the mobile station's serving base station and the at least one second signal characteristic of at least one of the mobile station's neighboring base stations to determine a first solution (operation 602). It may then be determined which base station

has the highest signal power level at a particular location (operation 603). The difference between the highest signal power and the power levels of the serving base station and the remaining neighboring base stations may be determined as a second solution (operation 604). The neighboring base station having the lowest signal power level at the particular location may be determined (operation 605). An average signal power level intermediary to the difference between the highest signal power level and the lowest signal power level may be determined as a third solution (operation 606). It may then be determined which solution is a most optimal solution by comparing the three solutions (operation 607). The signal characteristic of the NM data may then be adjusted based on the most optimal solution (operation 608). The mobile station may then be located based on the adjusted NM data (operation 609).

[0065] FIG 7 illustrates an embodiment of the present subject matter. The method includes providing a database of previously-gathered calibration data for a predetermined region in a wireless network (operation 701). The database may be a collection of data from uniform or non-uniform grids that contain network measurements with associated location estimates. Network measurement data may be then observed and measured typically by a mobile station or any other wireless device (operation 703). The network measurement data may include received base station power and timing advance, as well as other network characteristics observable by a mobile station. The observed network measurement data may then be modified (operation 705). This modification may include applying an attenuation function to some or all of the network measurement data or converting absolute values into relative values. The modification may be performed by a

processor, microprocessor or ASICS. The modified network measurement data may then be compared to the calibration database in order to determine the location of the mobile station (operation 707). The comparison may be performed by a processor, microprocessor or ASICS.

[0066] FIG 8 is another illustration of an embodiment of the present subject matter. A database of previously-gathered calibration data for a predetermined region in a wireless network may be provided (operation 801). Observed network measurement data may be collected which includes a first signal characteristic from the mobile's serving transmitter (operation 803). The observed network measurement data may be modified as a function of the first signal characteristic (operation 805), for example the first signal characteristic may be received power and the modification may be a function of the relative value with respect to the received power. The modified network measurement data may be compared with the database of calibration data to determine the location of the mobile station (operation 807)

[0067] FIG 9 is an illustration of an embodiment of the present subject matter for determining a location of a mobile station. A database of calibration data for a region may be provided (901). Network measurement data from transmitters may be observed and collected including a signal characteristic from each of the transmitters (operation 903). An average value for the signal characteristic among the transmitters may be determined (operation 905). The average for the signal characteristic may be a weighted average. The observed network measurement data may be modified using the determined average value (operation 907) and the modified network measurement data may be

compared with the database of calibration data to determine the location of the mobile station (operation 909)

[0068] FIG 10 is an illustration of an embodiment of the present subject matter for determining a location of a mobile station. A database of previously-gathered outdoor calibration data for a predetermined region in a wireless network may be provided (operation 1001). Network measurement data may be observed and collected (operation 1003). The network measurement data may be compared with the database of calibration data to thereby determine a plurality of location estimates for the mobile station (operation 1005). The location estimates may be derived using modified, unmodified, limited signal characteristics, several signal characteristics, etc. For each location estimate, a confidence measure may be determined (operation 1007). A location may be determined based on the plurality of location estimates and their respective confidence measures (1009). For example, the location may be determined based on a weighted average, where the weights are directly proportional to the confidence measures.

[0069] The embodiments described above may be used in communication devices, such as, a base station, having varying configurations that include, but are not limited to: predetermined calibration data collected over varying terrain, different base station configurations, varying cellular communication protocols, etc.

[0070] While preferred embodiments of the present invention have been described, it is to be understood that the embodiments described are illustrative only and the scope of the invention is to be defined solely by the appended claims when accorded a full

range of equivalents, many variations and modifications naturally occurring to those skilled in the art from a perusal hereof.

What is claimed is:

1. A method for determining a location of a mobile station, comprising:

providing a database of previously-gathered calibration data for a predetermined region in a wireless network;

collecting observed network measurement data;

modifying said observed network measurement data; and

comparing said modified network measurement data with said database of calibration data to thereby determine the location of the mobile station.

2. The method of Claim 1 wherein said database comprises previously-gathered calibration data at one or more predetermined calibration points within said region.

3. The method of Claim 2 wherein said previously-gathered calibration data at one or more predetermined calibration points is combined to form previously-gathered calibration data for one or more non-uniform grid points within said region.

4. The method of Claim 1 wherein said database comprises previously-gathered calibration data for one or more non-uniform grid points within said region.

5. The method of Claim 1 wherein said observed network measurement data includes data collected at the mobile station.

6. The method of Claim 1 wherein said previously-gathered calibration data includes signal strength information measured at a predetermined calibration point within said region for a signal transmitted from a known location within or in proximity to said region.

7. The method of Claim 1 wherein said previously-gathered calibration data includes signal strength information measured by a receiver at a known location within or in proximity to said region for a signal transmitted from a predetermined calibration point within said region.

8. The method of Claim 1 wherein said previously-gathered calibration data includes round trip time information for signals traveling between a predetermined calibration point within said region and a known location within or in proximity to said region.

9. The method of Claim 1 wherein said previously-gathered calibration data includes time difference of arrival information for a first signal traveling between a first known location and a predetermined calibration point within said region and a second signal traveling between a second known location and said calibration point.

10. The method of Claim 1 wherein said previously-gathered calibration data includes information identifying a serving cell of a transmitter transmitting a signal received at a predetermined calibration point within said region.

11. The method of Claim 1 wherein said previously-gathered calibration data includes information identifying a serving sector of a transmitter transmitting a signal received at a predetermined calibration point within said region.

12. The method of Claim 1 wherein said previously-gathered calibration data includes information regarding a state of said wireless network.

13. The method of Claim 1 wherein said previously-gathered calibration data includes calibration data gathered at a predetermined calibration point within said region wherein said predetermined calibration point is not located within a structure.

14. The method of Claim 13 wherein said observed network measurement data is collected at a mobile station located within a structure.

15. A system for determining a location of a mobile station, comprising:

a database of previously-gathered calibration data for a predetermined region in a wireless network;

circuitry for collecting observed network measurement data;

circuitry for modifying said observed network measurement data; and

circuitry for comparing said modified network measurement data with said database of calibration data to thereby determine the location of the mobile station.

16. The system of Claim 15 wherein said database comprises previously-gathered calibration data at one or more predetermined calibration points within said region.

17. The system of Claim 16 further comprising circuitry for combining said previously-gathered calibration data at one or more predetermined calibration points to thereby form previously-gathered calibration data for one or more non-uniform grid points within said region.

18. The system of Claim 15 wherein said database comprises previously-gathered calibration data for one or more non-uniform grid points within said region.

19. The system of Claim 15 wherein said mobile station includes said circuitry for collecting observed network measurement data.

20. The system of Claim 15 further comprising circuitry for measuring signal strength at a predetermined calibration point within said region for a signal transmitted from a known location within or in proximity to said region.

21. The system of Claim 15 further comprising circuitry for measuring signal strength at a receiver at a known location within or in proximity to said region for a signal transmitted from a predetermined calibration point within said region.

22. The system of Claim 15 further comprising circuitry for determining round trip time for signals traveling between a predetermined calibration point within said region and a known location within or in proximity to said region.

23. The system of Claim 15 further comprising circuitry for determining time difference of arrival for a first signal traveling between a first known location and a predetermined calibration point within said region and a second signal traveling between a second known location and said calibration point.

24. The system of Claim 15 further comprising circuitry for identifying a serving cell of a transmitter transmitting a signal received at a predetermined calibration point within said region.

25. The system of Claim 15 further comprising circuitry for identifying a serving sector of a transmitter transmitting a signal received at a predetermined calibration point within said region.

26. The system of Claim 15 wherein said previously-gathered calibration data includes information regarding a state of said wireless network.

27. The system of Claim 15 wherein said previously-gathered calibration data includes calibration data gathered at a predetermined calibration point within said region wherein said predetermined calibration point is not located within a structure.

28. The system of Claim 27 wherein said observed network measurement data is collected at a mobile station located within a structure.

29. A method for determining a location of a mobile station, comprising:

providing a database of previously-gathered calibration data for a predetermined region in a wireless network, wherein said network includes a serving transmitter;

collecting observed network measurement data including a first signal characteristic from said serving transmitter;

modifying said observed network measurement data using said first signal characteristic; and

comparing said modified network measurement data with said database of calibration data to thereby determine the location of the mobile station.

30. The method of Claim 29 wherein said database comprises previously-gathered calibration data for one or more non-uniform grid points within said region.

31. The method of Claim 29 wherein said observed network measurement data includes data collected at the mobile station.

32. The method of Claim 29 wherein said previously-gathered calibration data includes calibration data gathered at a predetermined calibration point within said region wherein said predetermined calibration point is not located within a structure.

33. The method of Claim 32 wherein said observed network measurement data is collected at a mobile station located within a structure.

34. The method of Claim 29 wherein said first signal characteristic is signal strength.

35. The method of Claim 34 wherein said collecting observed network measurement data further includes collecting a second signal characteristic from a neighboring transmitter wherein said second signal characteristic is signal strength.

36. The method of Claim 35 wherein the modifying of said calibration data uses a difference between said first and second signal characteristics.

37. The method of Claim 29 wherein said first signal characteristic is signal strength of a control channel transmitted by said serving transmitter and received by said mobile station.

38. The method of Claim 37 wherein said collecting observed network measurement data further includes collecting a second signal characteristic from a neighboring transmitter wherein said second signal characteristic is signal strength of a control channel transmitted by said neighboring transmitter and received by said mobile station.

39. The method of Claim 29 wherein said observed network measurement data includes a data set comprising:

$[P_1,... P_n, TA]$

where:

P_1 represents the signal strength of said serving transmitter as measured at said mobile station,

P_n represents a signal strength of at a nth neighboring transmitter as measured at said mobile station, and

TA represents a timing advance parameter;

and wherein said modified network measurement data includes a data set comprising:

$[0,...P_1-P_{n-1}, P_1-P_n, TA]$

where:

0 represents a difference between P_1 and P_1,

P_1-P_{n-1} represents a difference between P_1 and P_{n-1}, and

P_1-P_n represents a difference between P_1 and P_n.

40. The method of Claim 39 wherein said first neighboring transmitter is not a member of said wireless network.

41. A method for determining a location of a mobile station, comprising:

providing a database of previously-gathered calibration data for a predetermined region in a wireless network;

collecting observed network measurement data from each of a plurality of transmitters including a signal characteristic from each one of said plural transmitters;

determining an average value for select ones of said signal characteristics;

modifying said observed network measurement data using said average value; and

comparing said modified network measurement data with said database of calibration data to thereby determine the location of the mobile station.

42. The method of Claim 41 wherein said database comprises previously-gathered calibration data for one or more non-uniform grid points within said region.

43. The method of Claim 41 wherein said observed network measurement data includes data collected at the mobile station.

44. The method of Claim 41 wherein said previously-gathered calibration data includes calibration data gathered at a predetermined calibration point within said region wherein said predetermined calibration point is not located within a structure.

45. The method of Claim 41 wherein said observed network measurement data is collected at a mobile station located within a structure.

46. The method of Claim 41 wherein said signal characteristic is signal strength.

47. The method of Claim 46 wherein the modifying of said calibration data uses a difference between said average value and said signal characteristic for a first one of said plural transmitters.

48. The method of Claim 41 wherein said signal characteristic is signal strength of a control channel.

49. The method of Claim 41, wherein the observed network measurement data includes received signal strength of said transmitters as said mobile station.

50. The method of Claim 41 wherein said observed network measurement data includes a data set comprising:

$[P_1, P_2, P_3, TA]$

where:

P_1 represents the signal strength of a first one of said plural transmitters as measured at said mobile station,

P_2 represents a signal strength of a second one of said plural transmitters as measured at said mobile station wherein $P_2 > P_1$,

P_3 represents a signal strength of a third one of said plural transmitters as measured at said mobile station wherein $P_2 > P_3$, and

TA represents a timing advance parameter;

and wherein said modified network measurement data includes a data set comprising:

$[P_1\text{-}P_{AVG}, P_2\text{-}P_{AVG}, P_3\text{-}P_{AVG}, TA]$

where:

P_{AVG} represents an average value of P_1, P_2, and P_3,

P_1-P_{AVG} represents a difference between P_1 and P_{AVG},

P_2-P_{AVG} represents a difference between P_2 and P_{AVG},

P_3-P_{AVG} represents a difference between P_3 and P_{AVG},

51. The method of Claim 50 wherein said first transmitter is a serving transmitter for said mobile station and said second and third transmitters are neighboring transmitters.

52. The method of Claim 41 wherein at least one of said plurality of transmitters is not a member of said wireless network.

ABSTRACT

A method of modifying calibration data used to geo-locate a mobile station located in an indoor environment is disclosed. When a mobile station is located indoors, the signal strength of signals received and/or transmitted by the mobile station have the tendency to be lower than the strength of the signals received by a mobile station located outdoors. As a result of these lower signal strengths, geo-location efforts which rely on signal strengths may result in unsatisfactory location accuracy. Modifying pre-existing calibration data obtained outdoors may provide a way to simulate indoor calibration data characteristics.

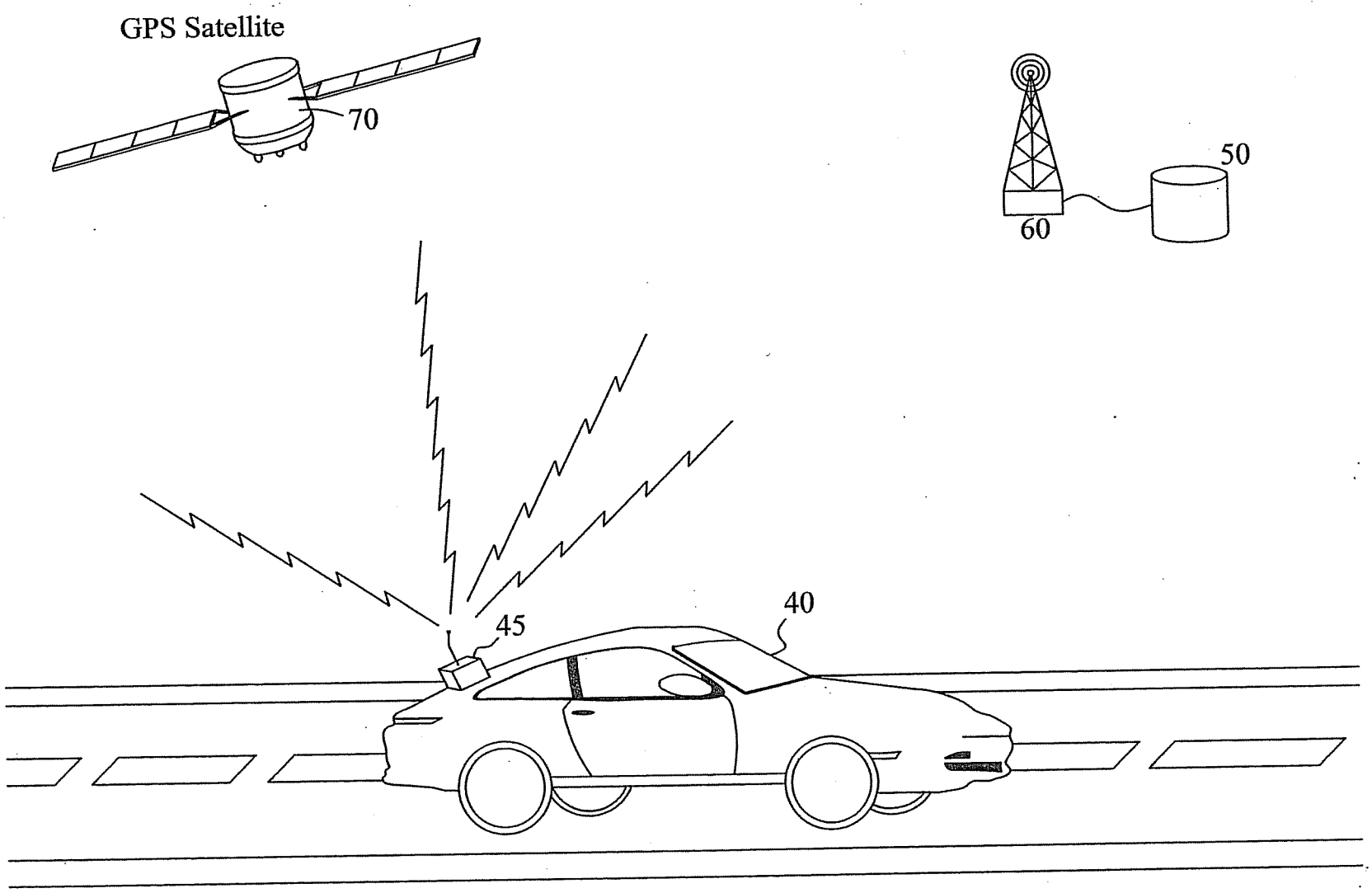

Figure 1

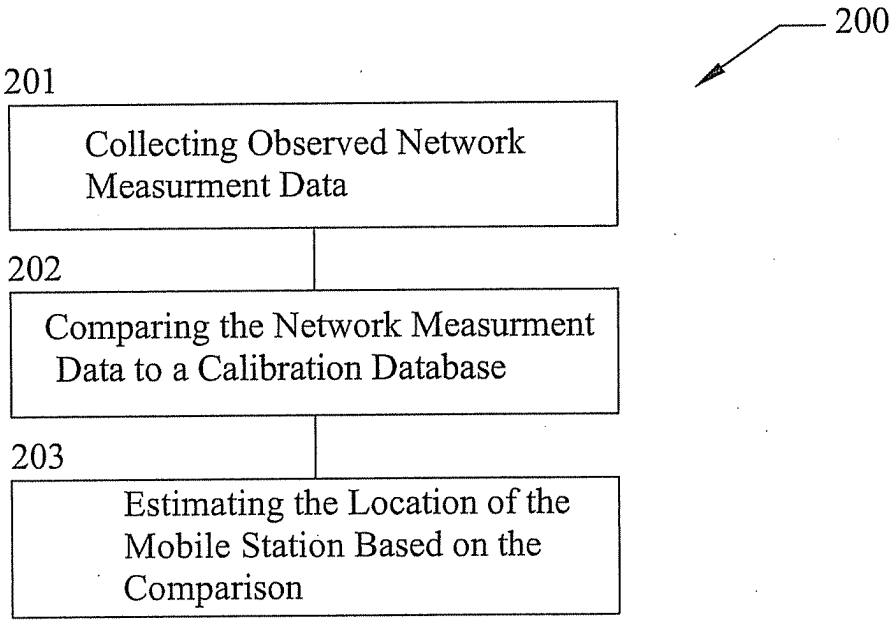
200
201
Collecting Observed Network Measurment Data
202
Comparing the Network Measurment Data to a Calibration Database
203
Estimating the Location of the Mobile Station Based on the Comparison

Figure 2

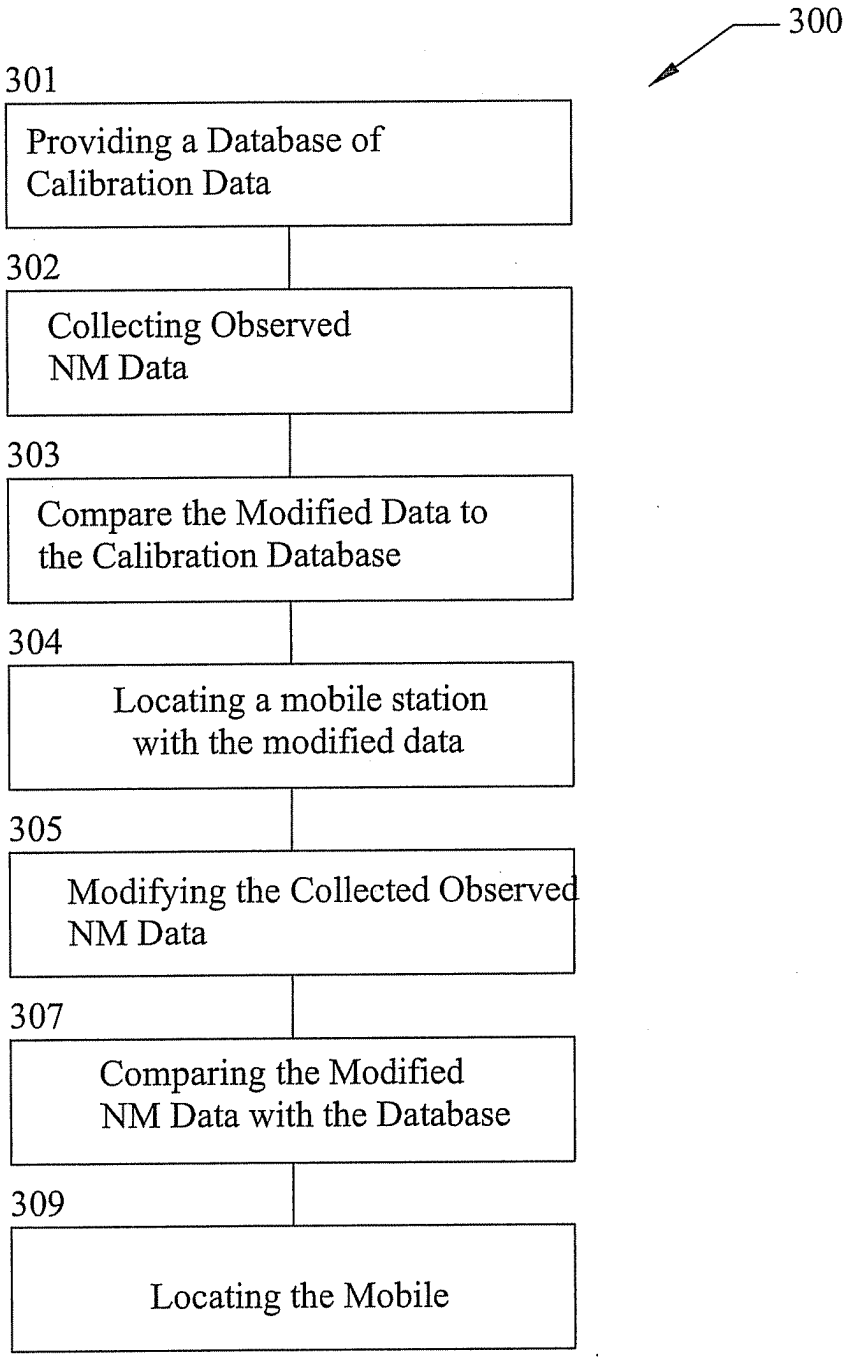
300
301
Providing a Database of Calibration Data
302
Collecting Observed NM Data
303
Compare the Modified Data to the Calibration Database
304
Locating a mobile station with the modified data
305
Modifying the Collected Observed NM Data
307
Comparing the Modified NM Data with the Database
309
Locating the Mobile

Figure 3

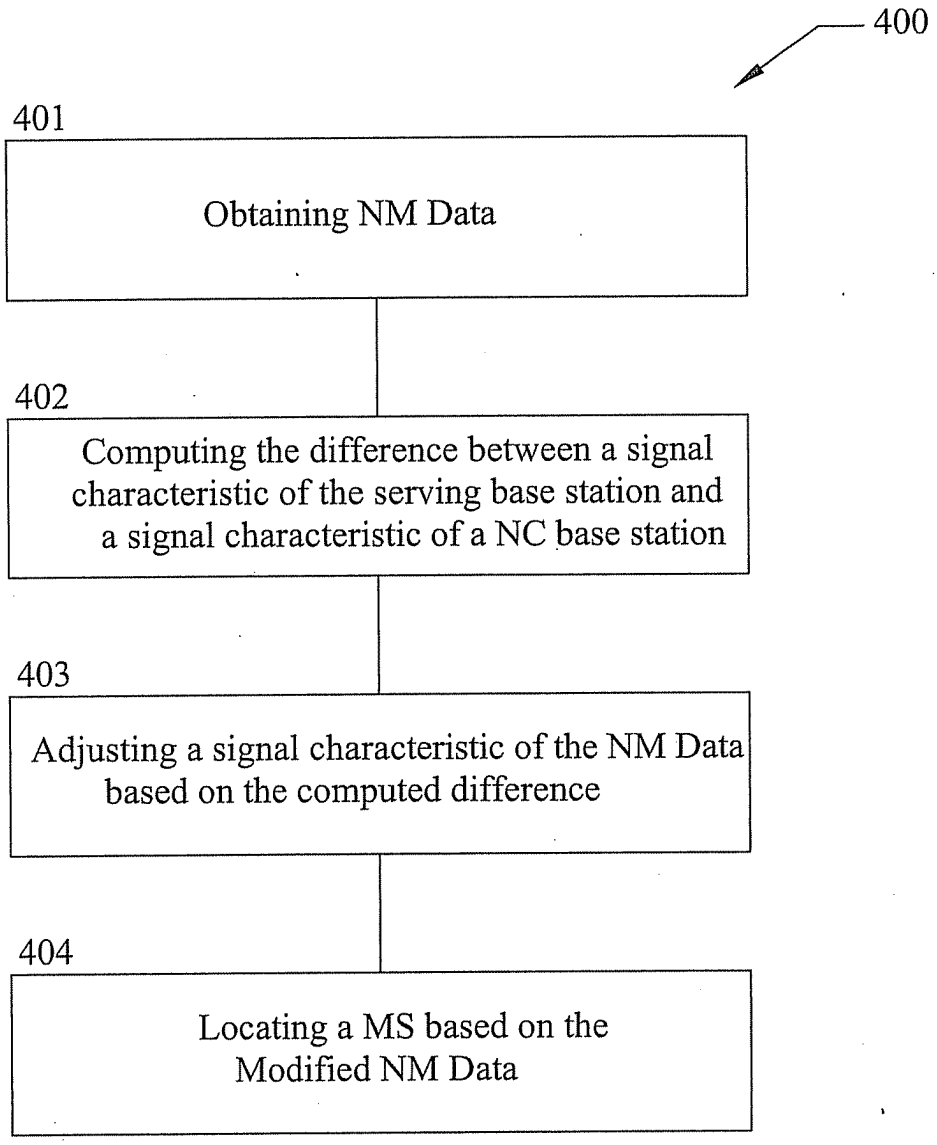
400
401
Obtaining NM Data
402
Computing the difference between a signal characteristic of the serving base station and a signal characteristic of a NC base station
403
Adjusting a signal characteristic of the NM Data based on the computed difference
404
Locating a MS based on the Modified NM Data

Figure 4

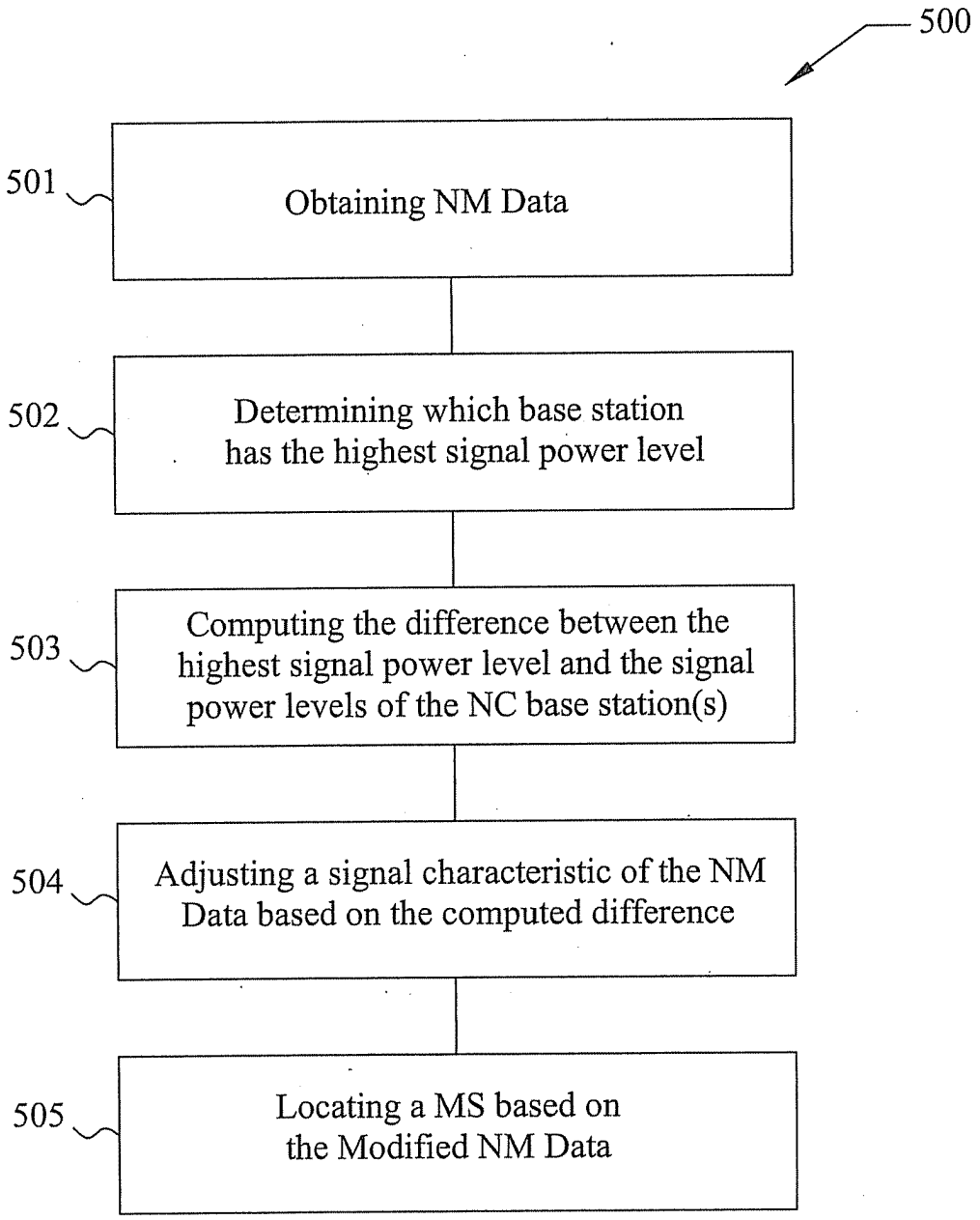
500
501
Obtaining NM Data
502
Determining which base station has the highest signal power level
503
Computing the difference between the highest signal power level and the signal power levels of the NC base station(s)
504
Adjusting a signal characteristic of the NM Data based on the computed difference
505
Locating a MS based on the Modified NM Data

Figure 5

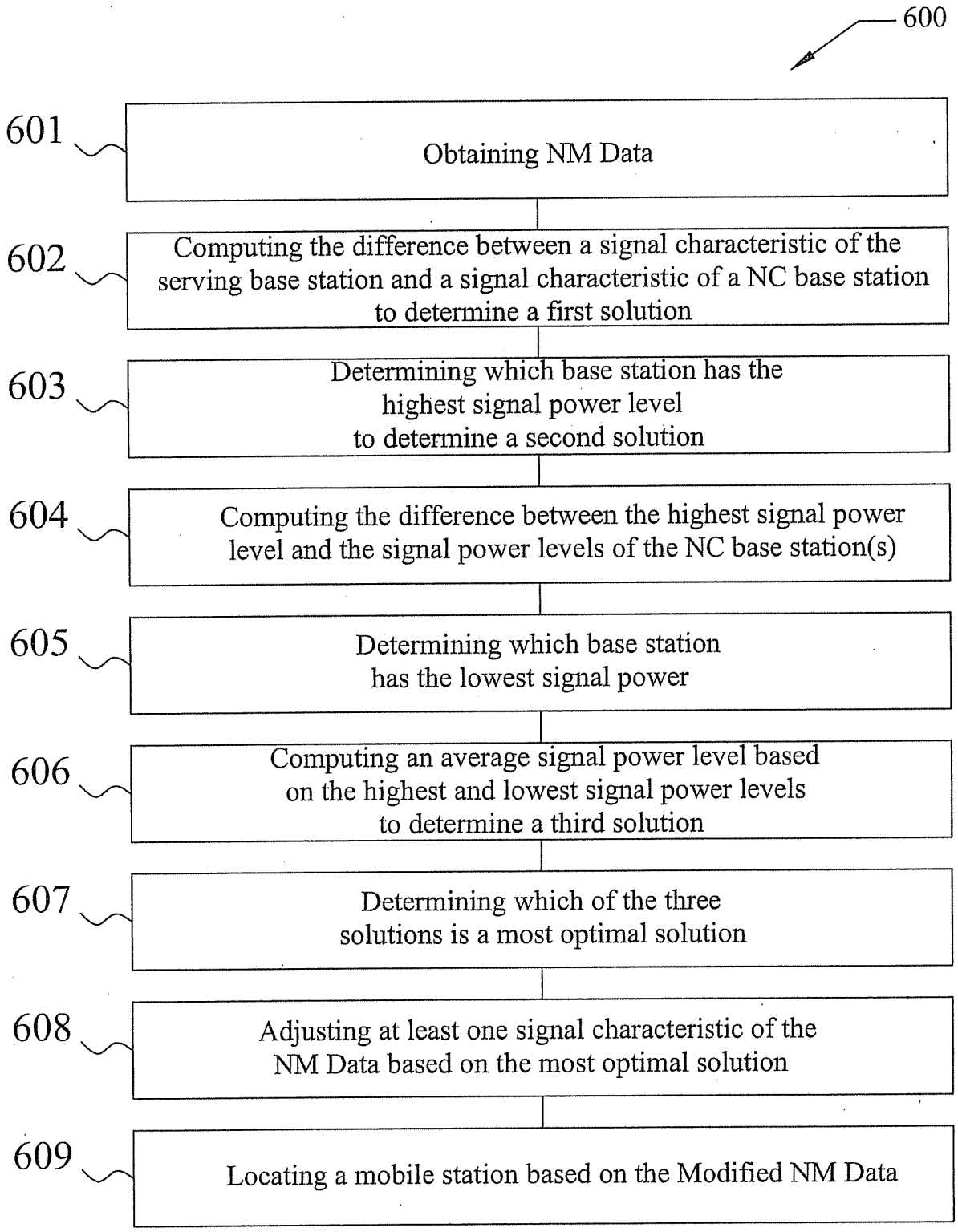
600
601
Obtaining NM Data
602
Computing the difference between a signal characteristic of the serving base station and a signal characteristic of a NC base station to determine a first solution
603
Determining which base station has the highest signal power level to determine a second solution
604
Computing the difference between the highest signal power level and the signal power levels of the NC base station(s)
605
Determining which base station has the lowest signal power
606
Computing an average signal power level based on the highest and lowest signal power levels to determine a third solution
607
Determining which of the three solutions is a most optimal solution
608
Adjusting at least one signal characteristic of the NM Data based on the most optimal solution
609
Locating a mobile station based on the Modified NM Data

Figure 6

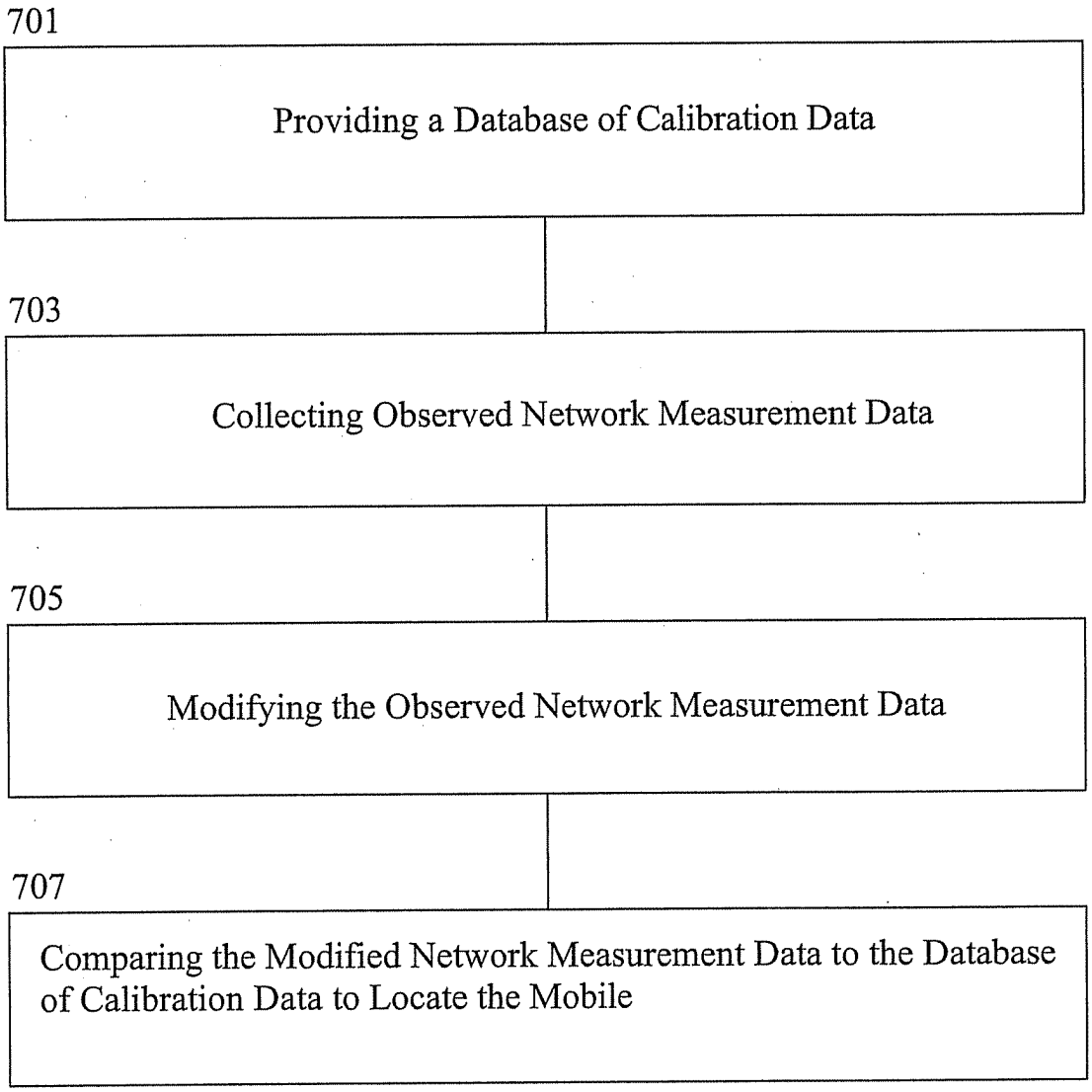
701
Providing a Database of Calibration Data
703
Collecting Observed Network Measurement Data
705
Modifying the Observed Network Measurement Data
707
Comparing the Modified Network Measurement Data to the Database of Calibration Data to Locate the Mobile

Figure 7

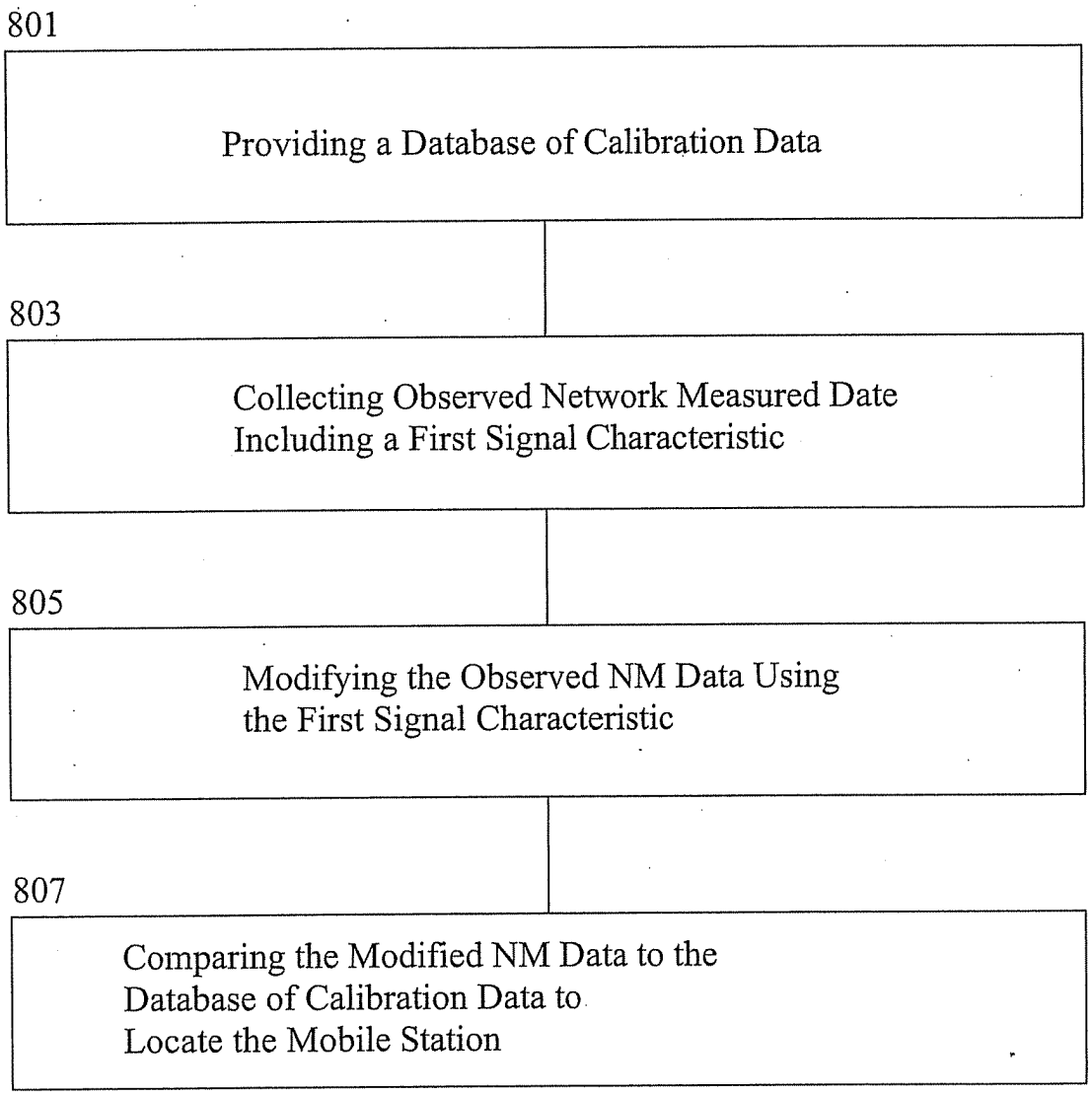
801
Providing a Database of Calibration Data
803
Collecting Observed Network Measured Date Including a First Signal Characteristic
805
Modifying the Observed NM Data Using the First Signal Characteristic
807
Comparing the Modified NM Data to the Database of Calibration Data to Locate the Mobile Station

Figure 8

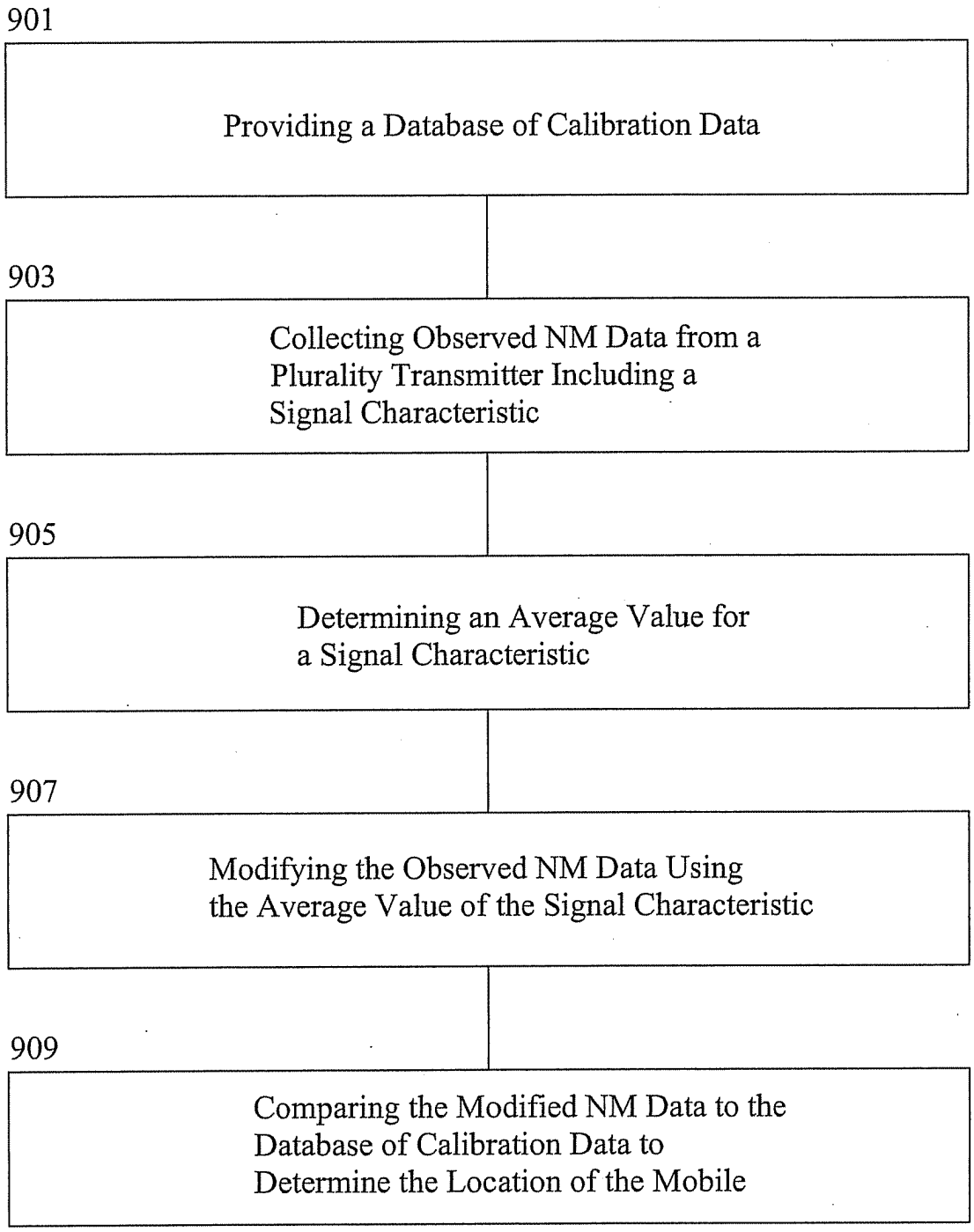
901
Providing a Database of Calibration Data
903
Collecting Observed NM Data from a Plurality Transmitter Including a Signal Characteristic
905
Determining an Average Value for a Signal Characteristic
907
Modifying the Observed NM Data Using the Average Value of the Signal Characteristic
909
Comparing the Modified NM Data to the Database of Calibration Data to Determine the Location of the Mobile

Figure 9

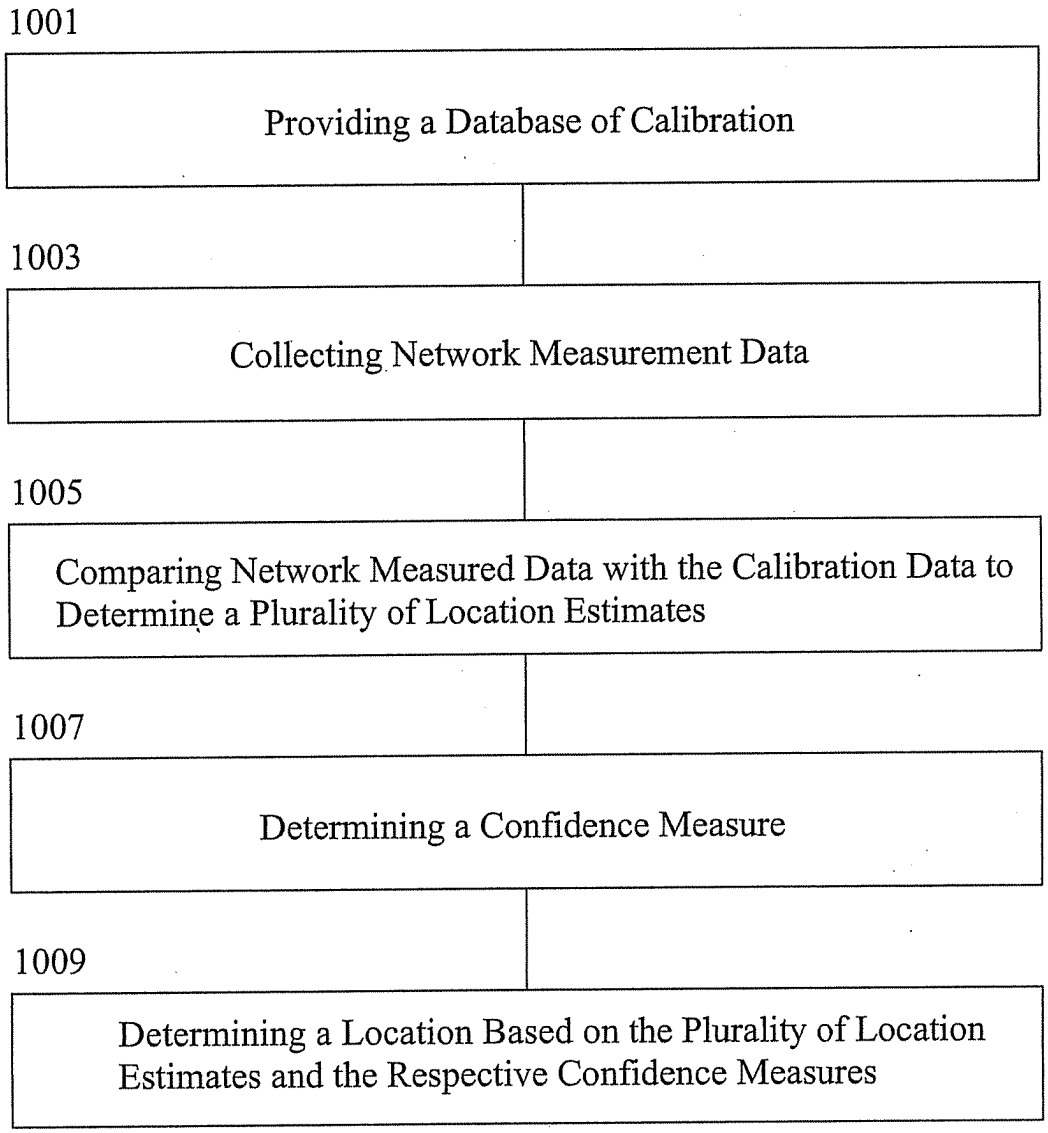
1001
Providing a Database of Calibration
1003
Collecting Network Measurement Data
1005
Comparing Network Measured Data with the Calibration Data to Determine a Plurality of Location Estimates
1007
Determining a Confidence Measure
1009
Determining a Location Based on the Plurality of Location Estimates and the Respective Confidence Measures

Figure 10

IN THE UNITED STATES PATENT AND TRADEMARK OFFICE

In re the Continuation Patent Application of Martin Alles, et al.

Serial No.: Unassigned Art Unit: 3662

Filed: Herewith Examiner: Dao L. Phan

Title: METHOD TO MODIFY CALIBRATION DATA USED TO LOCATE A MOBILE DEVICE

PRELIMINARY AMENDMENT

Commissioner for Patents
Post Office Box 1450
Alexandria VA 22313-1450

Sir:

Preliminary to the examination of the subject application, please amend the subject application as follows:

Amendments to the **Specification** begin on sheet 2 of this paper.

Applicant's **Remarks** begin on sheet 3 of this paper.

Amendment to the Specification

Applicant requests the Office to amend paragraph [0001] of the subject application as shown below. No new matter is added.

[0001] The present application is a continuation application of and claims the priority benefit of co-pending U.S. Application No. 12/026,333 entitled "Method to Modify Calibration data Used to Locate a Mobile Unit," which is related to and claims the priority benefit of provisional application No. 60/899,379 entitled "Mobile Location Using Network Measurement Reports" filed on February 5, 2007, each of which are [[is]] hereby incorporated by reference in their [[its]] entirety.

REMARKS

Claims 1-52 are pending with entry of this preliminary amendment.

Applicant has amended the specification to claim the priority benefit of parent patent application number 12/026,333. No new matter has been added.

Consideration and acceptance of Applicant's amendment is respectfully solicited.

Applicant submits the application is in condition for allowance and, as such, it is requested that Claims 1-52 be allowed to issue in a U.S. Patent.

If the Examiner believes that an in-person or telephonic interview with the Applicant's representatives will expedite the prosecution of the subject patent application, the Examiner is invited to contact the undersigned agents of record.

Should any additional fees be necessary in connection with the filing of this paper, or if a petition for extension of time is required for timely acceptance of the same, such a petition is made and the Office is authorized to charge such fees to Deposit Account No. 04-1679.

Respectfully submitted,

/mcc/

Mark C. Comtois
Reg. No. 46,285
Ryan T. Hardee
Reg. No. 57,515

DUANE MORRIS LLP
505 9th Street, N.W., Suite 1000
Washington, D.C. 20004
Telephone: (202) 776-7800
Telecopier: (202) 776-7801

Dated: April 15, 2009

COPY

AND01 082
1487

COMBINED DECLARATION AND POWER OF ATTORNEY FOR UTILITY PATENT APPLICATION

As a below named inventor, I hereby declare:

that my residence, post office address and citizenship are as stated below next to my name;

that I verily believe that I am the original, first and sole inventor (if only one name is listed below) or a joint inventor (if plural inventors are named below) of the invention which is the subject of an application entitled: METHOD TO MODIFY CALIBRATION DATA USED TO LOCATE A MOBILE UNIT; said invention being described and claimed [ ] in the attached specification [X] in the specification of application Serial No. 12/026,333 filed 05 February 2008; that I have reviewed and understand the content of said specification including the claims; that I do not know and do not believe the said invention was ever known or used in the United States before my or our invention thereof, or patented or described in any printed publication in any country before my or our invention thereof or more than one year prior to said application; that said invention was not in public use or on sale in the United States more than one year prior to said application; that said invention has not been patented or made the subject of an inventor's certificate issued before the date of said application in any country foreign to the United States on an application filed by me or my legal representatives or assigns more than twelve months prior to said application; that I acknowledge my duty to disclose information of which I am aware which is material to patentability as defined in 37 CFR 1.56; and that no application for patent or inventor's certificate on this invention has been filed in any country foreign to the United States prior to said application by me or my legal representatives or assigns, except as follows:

COUNTRY/INTERNATIONAL	APPLICATION NUMBER	DATE OF FILING (day, month, year)	PRIORITY CLAIMED UNDER 35 U.S.C. 119/36
			YES___ NO__
			YES___ NO__

I hereby claim the benefit under 35 U.S.C. § 119(e) of any United States provisional application listed below:

60/899,379 filed February 5, 2007.

I hereby appoint Mark C. Comtois, Reg. No. 46,285; Joseph English, Reg. No. 42,514; Patrick D. McPherson, Reg. No. 46,255, associated with Customer No. 39290, to prosecute said application and to transact all business in the Patent and Trademark Office connected therewith and to file, prosecute and transact all business in connection with international applications directed to said invention:

Address all correspondence to: Duane Morris LLP
505 9th Street, N.W., Suite 1000
Washington, DC 20004

Direct all telephone calls to (202) 776-7800

I hereby declare that all statements made herein of my own knowledge are true and that all statements made on information and belief are believed to be true; and further that these statements were made with the knowledge that willful false statements and the like so made are punishable by fine or imprisonment, or both, under Section 1001 of Title 18 of the United States Code and that such willful false statements may jeopardize the validity of the application or any patent issued thereon.

Martin ALLES
FULL NAME OF INVENTOR

x Martin Alles
SIGNATURE

04/01/08
DATE

2421 Williams Avenue
POST OFFICE ADDRESS

US
CITIZENSHIP

Vienna, VA 22180

DM2/1397546.v1

John CARLSON FULL NAME OF INVENTOR	X SIGNATURE	4/7/08 DATE
43479 Ogden Place RESIDENCE	US CITIZENSHIP	
Dulles, Virginia 20166 POST OFFICE ADDRESS		

George MAHER FULL NAME OF INVENTOR	X SIGNATURE	3/31/2008 DATE
100 Adele Garden Way RESIDENCE	US CITIZENSHIP	
Herndon, Virginia 20170 POST OFFICE ADDRESS		

Selcuk MAZLUM FULL NAME OF INVENTOR	X SIGNATURE	3/31/2008 DATE
136 Clubhouse Drive SW, Apt. 201 RESIDENCE	Turkey CITIZENSHIP	
Leesburg, Virginia 20175 POST OFFICE ADDRESS		

DM2/1397546.v1

Electronic Patent Application Fee Transmittal

Application Number:	
Filing Date:	
Title of Invention:	METHOD TO MODIFY CALIRATION DATA USED TO LOCATE A MOBILE UNIT
First Named Inventor/Applicant Name:	Martin Alles
Filer:	Mark Charles Comtois/Jacquetta McBee
Attorney Docket Number:	AND01 082 CONT

Filed as Large Entity

Utility under 35 USC 111(a) Filing Fees

Description	Fee Code	Quantity	Amount	Sub-Total in USD($)
Basic Filing:				
Utility application filing	1011	1	330	330
Utility Search Fee	1111	1	540	540
Utility Examination Fee	1311	1	220	220
Pages:				
Claims:				
Claims in excess of 20	1202	32	52	1664
Independent claims in excess of 3	1201	1	220	220
Miscellaneous-Filing:				

Description	Fee Code	Quantity	Amount	Sub-Total in USD($)
Petition:				
Patent-Appeals-and-Interference:				
Post-Allowance-and-Post-Issuance:				
Extension-of-Time:				
Miscellaneous:				
			Total in USD ($)	**2974**

Electronic Acknowledgement Receipt

EFS ID:	5161070
Application Number:	12424320
International Application Number:	
Confirmation Number:	1334
Title of Invention:	METHOD TO MODIFY CALIRATION DATA USED TO LOCATE A MOBILE UNIT
First Named Inventor/Applicant Name:	Martin Alles
Customer Number:	79172
Filer:	Mark Charles Comtois/Jacquetta McBee
Filer Authorized By:	Mark Charles Comtois
Attorney Docket Number:	AND01 082 CONT
Receipt Date:	15-APR-2009
Filing Date:	
Time Stamp:	17:25:02
Application Type:	Utility under 35 USC 111(a)

Payment information:

Submitted with Payment	yes
Payment Type	Deposit Account
Payment was successfully received in RAM	$2974
RAM confirmation Number	3277
Deposit Account	041679
Authorized User	

The Director of the USPTO is hereby authorized to charge indicated fees and credit any overpayment as follows:

Charge any Additional Fees required under 37 C.F.R. Section 1.21 (Miscellaneous fees and charges)

File Listing:

Document Number	Document Description	File Name	File Size(Bytes)/ Message Digest	Multi Part /.zip	Pages (if appl.)
1		AND01_082_CONT.pdf	4684266 d6b5f27d99fc6063866b2e1088546f65d2364bf1	yes	54

Multipart Description/PDF files in .zip description

Document Description	Start	End
Transmittal of New Application	1	1
Fee Worksheet (PTO-06)	2	2
Specification	3	28
Claims	29	38
Abstract	39	39
Drawings-only black and white line drawings	40	49
Preliminary Amendment	50	52
Oath or Declaration filed	53	54

Warnings:

Information:

2	Fee Worksheet (PTO-06)	fee-info.pdf	37980 cd63738f884996ae0f6e313819fd19ce2fc8883e	no	2

Warnings:

Information:

Total Files Size (in bytes):	4722246

This Acknowledgement Receipt evidences receipt on the noted date by the USPTO of the indicated documents, characterized by the applicant, and including page counts, where applicable. It serves as evidence of receipt similar to a Post Card, as described in MPEP 503.

New Applications Under 35 U.S.C. 111
If a new application is being filed and the application includes the necessary components for a filing date (see 37 CFR 1.53(b)-(d) and MPEP 506), a Filing Receipt (37 CFR 1.54) will be issued in due course and the date shown on this Acknowledgement Receipt will establish the filing date of the application.

National Stage of an International Application under 35 U.S.C. 371
If a timely submission to enter the national stage of an international application is compliant with the conditions of 35 U.S.C. 371 and other applicable requirements a Form PCT/DO/EO/903 indicating acceptance of the application as a national stage submission under 35 U.S.C. 371 will be issued in addition to the Filing Receipt, in due course.

New International Application Filed with the USPTO as a Receiving Office
If a new international application is being filed and the international application includes the necessary components for an international filing date (see PCT Article 11 and MPEP 1810), a Notification of the International Application Number and of the International Filing Date (Form PCT/RO/105) will be issued in due course, subject to prescriptions concerning national security, and the date shown on this Acknowledgement Receipt will establish the international filing date of the application.

Filing Date: 04/15/09

Approved for use through 7/31/2006. OMB 0651-0032
U.S. Patent and Trademark Office; U.S. DEPARTMENT OF COMMERCE

Under the Paperwork Reduction Act of 1995, no persons are required to respond to a collection of information unless it displays a valid OMB control number.

PATENT APPLICATION FEE DETERMINATION RECORD

Substitute for Form PTO-875

Application or Docket Number: 12/424,320

APPLICATION AS FILED – PART I

FOR	(Column 1) NUMBER FILED	(Column 2) NUMBER EXTRA	SMALL ENTITY RATE ($)	SMALL ENTITY FEE ($)	OR	OTHER THAN SMALL ENTITY RATE ($)	OTHER THAN SMALL ENTITY FEE ($)
BASIC FEE (37 CFR 1.16(a), (b), or (c))	N/A	N/A	N/A			N/A	330
SEARCH FEE (37 CFR 1.16(k), (i), or (m))	N/A	N/A	N/A			N/A	540
EXAMINATION FEE (37 CFR 1.16(o), (p), or (q))	N/A	N/A	N/A			N/A	220
TOTAL CLAIMS (37 CFR 1.16(i))	52 minus 20 =	32	x$26		OR	x$52	1664
INDEPENDENT CLAIMS (37 CFR 1.16(h))	4 minus 3 =	* 1	x$110			x$220	220
APPLICATION SIZE FEE (37 CFR 1.16(s))	If the specification and drawings exceed 100 sheets of paper, the application size fee due is $260 ($130 for small entity) for each additional 50 sheets or fraction thereof. See 35 U.S.C. 41(a)(1)(G) and 37 CFR						
MULTIPLE DEPENDENT CLAIM PRESENT (37 CFR 1.16(j))			195			390	
			TOTAL			TOTAL	2974

* If the difference in column 1 is less than zero, enter "0" in column 2.

APPLICATION AS AMENDED – PART II

		(Column 1) CLAIMS REMAINING AFTER AMENDMENT		(Column 2) HIGHEST NUMBER PREVIOUSLY PAID FOR	(Column 3) PRESENT EXTRA	SMALL ENTITY RATE ($)	SMALL ENTITY ADDI-TIONAL FEE ($)	OR	OTHER THAN SMALL ENTITY RATE ($)	OTHER THAN SMALL ENTITY ADDI-TIONAL FEE ($)
AMENDMENT A	Total (37 CFR 1.16(i))	*	Minus	**	=	x =		OR	x =	
	Independent (37 CFR 1.16(h))	*	Minus	***	=	x =		OR	x =	
	Application Size Fee (37 CFR 1.16(s))									
	FIRST PRESENTATION OF MULTIPLE DEPENDENT CLAIM (37 CFR 1.16(j))					N/A		OR	N/A	
						TOTAL ADD'T FEE		OR	TOTAL ADD'T FEE	

		(Column 1) CLAIMS REMAINING AFTER AMENDMENT		(Column 2) HIGHEST NUMBER PREVIOUSLY PAID FOR	(Column 3) PRESENT EXTRA	SMALL ENTITY RATE ($)	SMALL ENTITY ADDI-TIONAL FEE ($)	OR	OTHER THAN SMALL ENTITY RATE ($)	OTHER THAN SMALL ENTITY ADDI-TIONAL FEE ($)
AMENDMENT B	Total (37 CFR 1.16(i))	*	Minus	**	=	x =		OR	x =	
	Independent (37 CFR 1.16(h))	*	Minus	***	=	x =		OR	x =	
	Application Size Fee (37 CFR 1.16(s))									
	FIRST PRESENTATION OF MULTIPLE DEPENDENT CLAIM (37 CFR 1.16(j))					N/A		OR	N/A	
						TOTAL ADD'T FEE		OR	TOTAL ADD'T FEE	

* If the entry in column 1 is less than the entry in column 2, write "0" in column 3.
** If the "Highest Number Previously Paid For" IN THIS SPACE is less than 20, enter "20".
*** If the "Highest Number Previously Paid For" IN THIS SPACE is less than 3, enter "3".
The "Highest Number Previously Paid For" (Total or Independent) is the highest number found in the appropriate box in column 1.

This collection of information is required by 37 CFR 1.16. The information is required to obtain or retain a benefit by the public which is to file (and by the USPTO to process) an application. Confidentiality is governed by 35 U.S.C. 122 and 37 CFR 1.14. This collection is estimated to take 12 minutes to complete, including gathering, preparing, and submitting the completed application form to the USPTO. Time will vary depending upon the individual case. Any comments on the amount of time you require to complete this form and/or suggestions for reducing this burden, should be sent to the Chief Information Officer, U.S. Patent and Trademark Office, U.S. Department of Commerce, P.O. Box 1450, Alexandria, VA 22313-1450. DO NOT SEND FEES OR COMPLETED FORMS TO THIS ADDRESS. **SEND TO: Commissioner for Patents, P.O. Box 1450, Alexandria, VA 22313-1450.**

If you need assistance in completing the form, call 1-800-PTO-9199 and select option 2.

PTO/SB/06 (07-06)
Approved for use through 1/31/2007. OMB 0651-0032
U.S. Patent and Trademark Office; U.S. DEPARTMENT OF COMMERCE
Under the Paperwork Reduction Act of 1995, no persons are required to respond to a collection of information unless it displays a valid OMB control number.

PATENT APPLICATION FEE DETERMINATION RECORD

Substitute for Form PTO-875

Application or Docket Number	Filing Date	☐ To be Mailed
12/424,320	04/15/2009	

APPLICATION AS FILED – PART I

FOR	(Column 1) NUMBER FILED	(Column 2) NUMBER EXTRA	SMALL ENTITY ☐ RATE ($)	SMALL ENTITY FEE ($)	OR	OTHER THAN SMALL ENTITY RATE ($)	OTHER THAN SMALL ENTITY FEE ($)
☐ BASIC FEE (37 CFR 1.16(a), (b), or (c))	N/A	N/A	N/A			N/A	
☐ SEARCH FEE (37 CFR 1.16(k), (i), or (m))	N/A	N/A	N/A			N/A	
☐ EXAMINATION FEE (37 CFR 1.16(o), (p), or (q))	N/A	N/A	N/A			N/A	
TOTAL CLAIMS (37 CFR 1.16(i))	minus 20 =	*	X $ =		OR	X $ =	
INDEPENDENT CLAIMS (37 CFR 1.16(h))	minus 3 =	*	X $ =			X $ =	
☐ APPLICATION SIZE FEE (37 CFR 1.16(s))	If the specification and drawings exceed 100 sheets of paper, the application size fee due is $250 ($125 for small entity) for each additional 50 sheets or fraction thereof. See 35 U.S.C. 41(a)(1)(G) and 37 CFR 1.16(s).						
☐ MULTIPLE DEPENDENT CLAIM PRESENT (37 CFR 1.16(j))							
* If the difference in column 1 is less than zero, enter "0" in column 2.			TOTAL			TOTAL	

APPLICATION AS AMENDED – PART II

AMENDMENT 04/15/2009	(Column 1) CLAIMS REMAINING AFTER AMENDMENT		(Column 2) HIGHEST NUMBER PREVIOUSLY PAID FOR	(Column 3) PRESENT EXTRA	SMALL ENTITY RATE ($)	SMALL ENTITY ADDITIONAL FEE ($)	OR	OTHER THAN SMALL ENTITY RATE ($)	OTHER THAN SMALL ENTITY ADDITIONAL FEE ($)
Total (37 CFR 1.16(i))	* 52	Minus	** 52	= 0	X $ =		OR	X $52=	0
Independent (37 CFR 1.16(h))	* 4	Minus	***4	= 0	X $ =		OR	X $220=	0
☐ Application Size Fee (37 CFR 1.16(s))									
☐ FIRST PRESENTATION OF MULTIPLE DEPENDENT CLAIM (37 CFR 1.16(j))							OR		
					TOTAL ADD'L FEE		OR	TOTAL ADD'L FEE	0

AMENDMENT	(Column 1) CLAIMS REMAINING AFTER AMENDMENT		(Column 2) HIGHEST NUMBER PREVIOUSLY PAID FOR	(Column 3) PRESENT EXTRA	RATE ($)	ADDITIONAL FEE ($)		RATE ($)	ADDITIONAL FEE ($)
Total (37 CFR 1.16(i))	*	Minus	**	=	X $ =		OR	X $ =	
Independent (37 CFR 1.16(h))	*	Minus	***	=	X $ =		OR	X $ =	
☐ Application Size Fee (37 CFR 1.16(s))									
☐ FIRST PRESENTATION OF MULTIPLE DEPENDENT CLAIM (37 CFR 1.16(j))							OR		
					TOTAL ADD'L FEE		OR	TOTAL ADD'L FEE	

* If the entry in column 1 is less than the entry in column 2, write "0" in column 3.
** If the "Highest Number Previously Paid For" IN THIS SPACE is less than 20, enter "20".
*** If the "Highest Number Previously Paid For" IN THIS SPACE is less than 3, enter "3".
The "Highest Number Previously Paid For" (Total or Independent) is the highest number found in the appropriate box in column 1.

Legal Instrument Examiner:
/JAMES MASON/

This collection of information is required by 37 CFR 1.16. The information is required to obtain or retain a benefit by the public which is to file (and by the USPTO to process) an application. Confidentiality is governed by 35 U.S.C. 122 and 37 CFR 1.14. This collection is estimated to take 12 minutes to complete, including gathering, preparing, and submitting the completed application form to the USPTO. Time will vary depending upon the individual case. Any comments on the amount of time you require to complete this form and/or suggestions for reducing this burden, should be sent to the Chief Information Officer, U.S. Patent and Trademark Office, U.S. Department of Commerce, P.O. Box 1450, Alexandria, VA 22313-1450. DO NOT SEND FEES OR COMPLETED FORMS TO THIS ADDRESS. **SEND TO: Commissioner for Patents, P.O. Box 1450, Alexandria, VA 22313-1450.**
If you need assistance in completing the form, call 1-800-PTO-9199 and select option 2.