CERTIFICATE OF TRANSLATION ACCURACY

I am a professional reviewer and coordinator specializing in translating Asian and European languages to English and vice versa.

I served as Chief Examiner of the certified court interpreter test for the State of California and as a translator and interpreter for various federal agencies through the U.S. Department of State of for more than a decade. I served as an instructor at the University of California at Berkeley and the Middlebury Institute of International Studies at Monterey.

I have more than 30 years of experience translating thousands of technical, legal, and business submitted to, among others, Asian judicial authorities, various U.S. federal courts, the U.S. International Trade Commission (ITC), and the USPTO Patent Trial and Appeal Board (PTAB).

I certify that the following document translated from Japanese to the English language is a true, correct, and complete translation of the corresponding source text to the best of my knowledge and ability.

I certify under penalty of perjury that the foregoing is true and correct.

Executed this 26th day of August 2023 in the Contra Costa County of the State of California.

By: _____

Alex N. Jo
Member, ATA

{19) Japanese Patent Office (JP)

(12) **Patent Application** Gazette (A)

(11) Published Application No.
JP2007-41143
(P2007-41143A)
(43) **Published: Feb. 15, 2007**

(51)hlt. Cl	ID Number		FI			Theme code (ref.)
G09B	***29/00***	***(2006.01)***	G09B	29/00	**A**	2C032
G0lC	***21/00***	***(2006.01)***	GOl C	21/00	C	2Fl29
G09B	***29110***	***(2006.01)***	G09B	29/10	A	5B050
G08G	***1/005***	***(2006.01)***	G08G	1/005		5B069
G06T	***11/60***	***(2006.01)***	G06T	11/60		5Hl80

Re nest for Examination: No Number of Claims: 8 OL Total ages: 18

(21) Filed Application No.: 2005-223014 (?2005-223014)

(22) Filed: Aug. 1, 2005 (2005.8.1)

(71) Applicant: 303046277
c/o Asahi Kasei Microdevices Corporation 1-23-7 Nishi-Shinjuku, Shinjuku-ku, Tokyo, Japan

(74) *Agent or Attorney:* 100077481
TANI Yoshikazu Patent Attorney

(72) Inventor: NISHIJIMA Junichi
c/o Asahi Kasei Microdevices Corporation 3050 Okada, Atsugi-shi, Kanagawa-ken, Japan

(72) Inventor: YAMASHITA Masaya
c/o Asahi Kasei Microdevices Corporation 3050 Okada, Atsugi-shi, Kanagawa-ken, Japan

F term (reference) 2C032 HB22 HCl 1 HC25 HD03
2Fl29 AA02 BB03 BB19 BB21 BB26 BB29 DD31 EE02 EE05 EE23 EE52 EE85 EE86 FF12 HH12

Continued on last aoe

(54) [TITLE OF THE INVENTION] MOBILE DEVICE AND DRAWING PROCESSING CONTROL METHOD THEREOF

(57) ABSTRACT

[PROBLEM]
fa accordance with changes to a held orientation state of a dev ice, enable switching to low power consumption or optimal m ap image display with nosense of discomfort.

fMEANS FOR SOLUTIONSl
A mobile device where device direction is detected by an azim uth angle detecting pa1t 13 and that displays a map image on a displaying part based on this direction. The mobile device is p rovided with an acceleration detecting part 11 for detecting the degree of tilt of the display screen of the displaying pait of th e device and an estin1ation calculating pa1t 16 that detennines the holding, cai1ying, use state of the device using these detect ion results. When the tilt of the device is detected to be outside a prescribed angle for a prescribed 3111ount of time, the estima tion calculating part 16 detemiines that the device is in a use st ate where the pedestrian using the device is not view-ing the111 ap image and therefore switches to low power consumption by halting display calculation processing for the map iniage, ai1d writes the map in1age data from prior to the detemiination to r etention memo1y, to prepai·e for redisplaying when viewing us e state is resumed thereafter.
Selected Diagr3111: FIG. 1

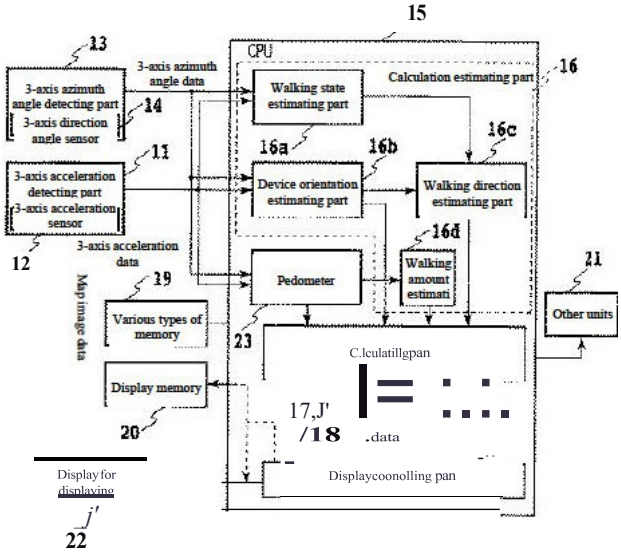

What is claimed is:

[Claim 1]

A mobile device that displays drawing on a displaying part of the device according to the device use state, comprising:

azimuth angle detecting means for detecting azimuth the device faces;

acceleration detection means for detecting the degree of tilt of the displaying part of the device; and

device orientation calculation estimating means that calculates and estimates whether the device orientation is in viewing use state or non-viewing state based on azimuth angle data from the azimuth angle detecting means and acceleration data from the acceleration detection means; wherein

when the orientation of the device is in non-viewing state, the drawing data just prior thereto is retained, drawing processing is halted, and when the orientation of the device is returned to viewing use state, the retained drawing data is used for redisplaying drawing on the displaying part.

[Claim 2]

The mobile device according to claim 1, further comprising:

movement amount calculation estimating means that calculates and estimates movement amount of the device based on a change pattern of acceleration detected by the acceleration detection means over time; wherein

when the orientation of the device is returned to viewing use state, the retained drawing data is shifted according to the movement amount for redisplay.

[Claim 3]

The mobile device according to claim 1 or 2, further comprising:

change amount calculation estimating means that calculates and estimates the amount of change in traveling direction of the device based on a change pattern of acceleration detected by the acceleration detection means over time and on a change pattern of the azimuth angle detected by the azimuth angle detecting means; wherein

when the orientation of the device is returned to viewing use state, the retained drawing data is rotated according to the change amount for redisplay.

[Claim 4]

The mobile device according to claim 1, 2, or 3, wherein the drawing data is map image data, topographical image data, or navigation information.

[Claim 5]

A drawing processing control method for a mobile device that displays drawing on a displaying part of the device according to the use state of the device, comprising:

an azimuth angle detecting step for detecting azimuth the device is facing;

an acceleration detecting step of detecting the degree of tilt of the displaying part of the device;

a device orientation calculating and estimating step for calculating and estimating whether the orientation of the device is in viewing use state or non-viewing state based on the azimuth angle from the azimuth angle detecting step and the acceleration from the acceleration detecting step;

a calculating step for calculating current position and travel direction of the device; and

a display control step for displaying drawing of the current position and the travel direction on the displaying part based on the calculation result from the calculating step; wherein

when the orientation of the device is in non-viewing state, the drawing data just prior thereto is retained, drawing processing is halted, and when the orientation of the device is returned to viewing use state, the retained drawing data is used for redisplaying drawing on the displaying part.

[Claim 6]

The drawing processing control method for a mobile device according to claim 5, further comprising:

a movement amount calculating and estimating step for calculating and estimating movement amount of the device based on a change pattern of acceleration detected in the acceleration detecting step over time; wherein

when the orientation of the device is returned to the viewing use state, the retained drawing data is shifted according to the movement amount for redisplay.

[Claim 7]

The drawing processing control method for a mobile device according to claim 5 or 6, further comprising:

a change amount calculating and estimating step for calculating and estimating the amount of change in traveling direction of the device based on a change patter of acceleration detected in the acceleration detecting step over time and a change pattern of the azimuth angle detected by the azimuth angle detecting means; wherein

when the orientation of the device is returned to viewing use state, the azimuth of the retained drawing data is rotated according to the change amount for redisplay.

[Claim 8]
The drawing processing control method for a mobile device according to claim 5, 6, or 7, wherein the drawing data is map imag e data, topographical image data, or navigation information.

DETAILED DESCRIPTION OF THE INVENTION
TECHNICAL FIELD
[0001]
The present invention relates to a mobile device equipped with an autonomous navigation device for a pedestrian and to a drawi ng processing control method and in more detail, relates to a mobile device equipped with azimuth detecting means such as a geo magnetism sensor or the like and acceleration detection means such as an acceleration sensor or the like, and having an autonomo us navigation device for a pedestrian that can be used for a walking navigation device installed therein, and to a drawing processi ng control method that displays drawing on the displaying part based on the azimuth detected.

CONVENTIONAL TECHNOLOGY
[0002]
In recent years small mobile devices, represented by a cell phone, prepared with a GPS (Global Positioning System) function ha ve been actively developed. In these devices, there is an application example in which navigation for pedestrians is performed in conjunction with a GPS device, map distribution by a mobile phone network or the like, a display application, and the like.

[0003]
Some mobile devices that provide walking navigation for pedestrians are equipped with azimuth detecting means such as a geo magnetism sensor or the like in order to align the traveling direction of the pedestrian with the display of the map. In addition, the re are also devices equipped with acceleration detection means such as an acceleration sensor for detecting orientation of the mob ile device (detecting and correcting the orientation using acceleration detection means is essential for knowing the correct azimut h for an arbitrary orientation).

[0004]
Autonomous navigation using an azimuth angle sensor and an acceleration sensor is disclosed, for example, in Patent Document 1 and Patent Document 2. The device in Patent Document 1 is a mobile position detection device that enables improving position detection accuracy of the pedestrian, using autonomous navigation (for example, a configuration with a sensor that detects the nu mber of steps x stride length, correction of stride length, and movement direction) by changing the stride to match the walking sta te, enabling detecting the movement direction of a pedestrian more accurately, even if a GPS signal cannot be received.With the mobile position detection device, the amount of steps is used to detect movement position by calculating “number of steps X strid e length”, and by correcting the stride length according to walking state from walking time per step using the acceleration sensor and detecting the movement direction using the geomagnetism sensor, movement position of the pedestrian can be accurately det ected using autonomous navigation. Herein, even in cases of being located in a forest or in a valley between high-rise buildings w here a GPS satellite signal cannot be received, the position of a pedestrian carrying a mobile position detection device can readily be known with sufficient accuracy for practical use with improved stride length accuracy.

[0005]
In addition, Patent Document 2 is related to a walking navigation device that measures walking navigation of a pedestrian that moves in and out of buildings. This walking navigation device is equipped with a computer and an input device connected to this computer is mounted on a waist of the pedestrian. When the pedestrian walks, acceleration in the traveling direction and upward direction are detected by a traveling direction accelerometer and an upward direction accelerometer. A central processing unit (C PU) provided in the computer calculates a cross-correlation function from the detection results and compares this with a cross-cor relation function of a horizontal, ascending and descending gait stored in advance in a hard disk (HD). Any one of the walking be haviors is used for determination and thus it is possible to readily know that the pedestrian has walked on a path with a small heig ht difference such as going up or down stairs.

[0006]
Patent Document 1: Japanese Unexamined Patent Application 2000-97722
Patent Document 2: Japanese Unexamined Patent Application 2002-139340
Patent Document 3: Japanese Unexamined Patent Application 2005-157465

DISCLOSURE OF THE INVENTION
PROBLEMS TO BE SOLVED BY THE INVENTION
[0007]
However, these imposed a certain level of restrictions on the user such as use in a state in a specified orientation such as a mobile device fixed to a waist or requiring calibration after mounting in the case of orientation not being specified.
[0008]
In addition, with the mobile device used for this manner of walking navigation, map drawing processing is continued even if the device is held in an orientation where the device screen is not being viewed causing a problem of consuming power. In addition, there were problems that the orientation angle of the device in a state where the device screen is not being viewed is very different from the angle when in use so azimuth calculation and drawing processing were very different from actual so just after returning to a view position and using, map data in a completely different direction relative to the final direction display while the device was being viewed was displayed on the screen.

[0009]
In light of this manner of problems, an object of the present invention is to provide a mobile device and drawing processing control method that enables the mobile device to be held freely while being used for walking navigation, switches to low power consumption based on changes to hold orientation in viewing state or non-viewing state and enables navigation that does not cause stress to the user through optimal drawing display that does not cause discomfort.

MEANS FOR SOLVING THE PROBLEM
[0010]
The present invention is for achieving this manner of object and the invention according to claim 1 is a mobile device that displays drawing on a displaying part of the device according to the device use state, including:
azimuth angle detecting means for detecting azimuth the device faces;
acceleration detection means for detecting the degree of tilt of the displaying part of the device; and
device orientation calculation estimating means that calculates and estimates whether the device orientation is in viewing use state or non-viewing state based on azimuth angle data from the azimuth angle detecting means and acceleration data from the acceleration detection means; wherein
when the orientation of the device is in non-viewing state, the drawing data just prior thereto is retained, drawing processing is halted, and when the orientation of the device is returned to viewing use state, the retained drawing data is used for redisplaying drawing on the displaying part.

[0011]
In addition, the invention according to claim 2 is the invention according to claim 1, further including:
movement amount calculation estimating means that calculates and estimates movement amount of the device based on a change pattern of acceleration detected by the acceleration detection means over time; wherein
when the orientation of the device is returned to viewing use state, the retained drawing data is shifted according to the movement amount for redisplay.

[0012]
In addition, the invention according to claim 3 is the invention according to claim 1 or 2, further including:
change amount calculation estimating means that calculates and estimates the amount of change in traveling direction of the device based on a change pattern of acceleration detected by the acceleration detection means over time and on a change pattern of the azimuth angle detected by the azimuth angle detecting means; wherein
when the orientation of the device is returned to viewing use state, the retained drawing data is rotated according to the change amount for redisplay.

[0013]
The invention according to claim 4 is the invention according to claim 1, 2, or 3, wherein the drawing data is map image data, topographical image data, or navigation information. Here, the navigation information refers to various display information such as distances to some target points on the route to a preset destination, directions of travel indicated by arrows, and the like.
[0014]

In addition, the invention according to claim 5 is a drawing processing control method for a mobile device that displays drawing on a displaying part of the device according to the use state of the device, including:
an azimuth angle detecting step for detecting azimuth the device is facing;
an acceleration detecting step of detecting the degree of tilt of the displaying part of the device;
a device orientation calculating and estimating step for calculating and estimating whether the orientation of the device is in viewing use state or non-viewing state based on the azimuth angle from the azimuth angle detecting step and the acceleration from the acceleration detecting step;
a calculating step for calculating current position and travel direction of the device; and
a display control step for displaying drawing of the current position and the travel direction on the displaying part based on the calculation result from the calculating step; wherein
when the orientation of the device is in non-viewing state, the drawing data just prior thereto is retained, drawing processing is halted, and when the orientation of the device is returned to viewing use state, the retained drawing data is used for redisplaying drawing on the displaying part.
[0015]
In addition, the invention according to claim 6 is invention according to claim 5, further including:
a movement amount calculating and estimating step for calculating and estimating movement amount of the device based on a change pattern of acceleration detected in the acceleration detecting step over time; wherein
when the orientation of the device is returned to the viewing use state, the retained drawing data is shifted according to the movement amount for redisplay.
[0016]
The invention according to claim 7 is the invention according to claim 5 or 6, further including:
a change amount calculating and estimating step for calculating and estimating the amount of change in traveling direction of the device based on a change patter of acceleration detected in the acceleration detecting step over time and a change pattern of the azimuth angle detected by the azimuth angle detecting means; wherein
when the orientation of the device is returned to viewing use state, the azimuth of the retained drawing data is rotated according to the change amount for redisplay.
[0017]
The invention according to claim 8 is the invention according to claim 5, 6, or 7, wherein the drawing data is map image data, topographical image data, or navigation information.
[0018]
In other words, the mobile device of the present invention causes the displaying part of the device to display a drawing based on the drawing data according to the usage state of the device, and includes azimuth angle detecting means for detecting the azimut h the device is facing, acceleration detection means for detecting tilt of the device, and a calculation estimating part for determining the hold, carrying, or usage state of the device based on the detection results. When the tilt of the device is detected to be outside a prescribed angle for a prescribed amount of time, the calculation estimating part determines that the device is in a use state w here the pedestrian using the device is not viewing the drawing image and therefore switches to low power consumption by halting display calculation processing for the drawing data, and writes the drawing data from prior to the determination to retention memory, to prepare for redisplaying when viewing use state is resumed thereafter.
[0019]
In addition, even in the case of being at a device tilt such that the device is determined to be in a non-viewing state, if the calculation estimating part detects a prescribed pattern of vibration and oscillation state of the device for a prescribed amount of time or more, the pedestrian using the device is determined to be walking and to intend to immediately use azimuth applicable information. Therefore, the azimuth angle detecting means and acceleration detection means continue to calculate azimuth angle and acceleration of the device at prescribed intervals and the movement distance and travel direction are calculated based thereon.
[0020]
When the calculation estimating part determines that the detected tilt of the device is within a prescribed angle range for a prescribed period of time or more, the low power consumption mode is canceled and the drawing data saved in retention memory is displayed immediately or this drawing data image is moved according to the walking movement amount and travel direction change angle based on detection and calculation data determined while walking.
[0021]
In addition, the drawing processing control method of the mobile device of the present invention determines whether or not the device orientation angle is within a prescribed range to estimate viewing state or non-viewing state and in the case of estimating non-viewing state, switches to low power consumption by halting display calculation processing, and writes the drawing data from prior to the determination to retention memory, to prepare for redisplaying when viewing use state is resumed thereafter.

[0022]
In addition, device movement is determined to be straight forward movement or path movement, and in the case of straight forward movement, the retained drawing data is shifted by the movement amount of the device for redisplay, while in the case of path movement of the device and returning to viewing use state, the retained drawing data is rotated by the direction change angle according to the path movement distance of the device.

[0023]
Based on calculation and display control in the configuration described above, it is possible to detect the orientation and behavior of the device in space when using walking navigation, determine the state in which the device screen is not being viewed and the pedestrian's walking state, and thus stop unnecessary drawing processing. In addition, since the orientation angle of the device when not looking at the device screen is very different from the angle when using the device, the azimuth calculation and drawing processing will be completely different from what is actual. During this time, the drawing processing can be stopped while retaining the drawing data for that time. Immediately after returning to the use state, the drawing data can be moved and redrawn based on the final position where the pedestrian was looking at the device. During various usage actions by the pedestrian, a screen in a totally different direction is not displayed while the device is being held in a position for viewing so navigation use that does not cause sense of discomfort can be provided.

[EFFECTS OF THE INVENTION]
[0024]
According to the present invention, in walking navigation using a mobile device equipped with azimuth angle detecting means and acceleration detection means, it is possible to detect whether the device is in a viewing state or non-viewing state such as "looking at the display screen/not looking at the display screen" and switch to low power consumption in response to changes in the state of the holding orientation of the device, and navigation that does not cause stress to the user by displaying optimal images with no sense of discomfort can be provided.

[DESCRIPTION OF THE PREFERRED EMBODIMENTS]
[0025]
The following is a description of an embodiment of the present invention with reference to the drawings.
FIG. 1 is a block diagram depicting an equipment configuration in a mobile device according to the present invention and in the figure, code 11 represents a 3-axis acceleration detecting part, 12 represents a 3-axis acceleration sensor, 13 represents a 3-axis azimuth angle detecting part, 14 represents a 3-axis azimuth angle sensor, 15 represents a central processing unit (CPU), 16 represents a state calculation estimating part, 16a represents a walking state estimating part, 16b represents a device orientation estimating part (device orientation calculation estimating means), 16c represents a walking direction estimating part (change amount calculation estimating means), 16d represents a walking amount estimating part (movement amount calculation estimating means), 17 represents a calculating part, 18 represents a display controlling part, 19 represents various types of memory, 20 represents display memory, 21 represents other units, 22 represents a display for displaying, and 23 represents a pedometer.

[0026]
The 3-axis acceleration detecting part 11 has the 3-axis acceleration sensor 12 for detecting tilt and motion (acceleration) of the mobile device incorporated therein and the 3-axis azimuth angle detecting part 13 has the 3-axis azimuth angle sensor 14 for detecting geomagnetism incorporated therein. The 3-axis azimuth angle sensor 14 responds to geomagnetism and a direction angle information signal that is output accordingly is periodically captured into the 3-axis azimuth angle detecting part 13, which then generates data indicating facing direction on a screen part of a device displaying a map image.

[0027]
In addition, the central processing unit (CPU) 15 performs control and calculation for the mobile device, receives 3-axis acceleration data from the 3-axis acceleration detecting part 11 and 3-axis azimuth angle data from the 3-axis azimuth angle detecting part 13, and integrates dedicated software for the calculation estimating part 16 that calculates orientation angle, motion, advancing direction, and azimuth direction of the device itself, the calculating part 17 that calculates current position and traveling direction of the pedestrian based on information the calculation estimating results from this calculation estimating part 16, GPS, and information from other units 21, and the display controlling part 18 that performs processing for drawing on the screen displaying a map image according to the calculation results from the calculating part 17.
[0028]

Various types of memory 19 such as ROM and RAM are provided for this software, and various types of controllers, I/O, other units 21, and the like are also controlled by the CPU 15. The display memory 20 stores map image data for displaying on the display screen and this map image data itself is retained and used in conjunction with various memory mechanisms 19 through data distribution and the like using physical integration or communication means with the mobile device. The display for displaying 22 is for providing display for the mobile device such as a liquid crystal displaying part.

[0029]

The calculation estimating part 16 includes:

a walking state estimating part 16a that estimates the walking state of the pedestrian, in other words, whether the state is a device orientation fixed state or swing state based on the 3-axis acceleration data from the 3-axis acceleration detecting part 11 and 3-axis azimuth angle data from the 3-axis azimuth angle detecting part 13;

a device orientation estimating part 16b that estimates orientation of the device whether in a viewing use state or a non-viewing state;

a walking direction estimating part 16c that estimates walking direction of the pedestrian, in other words whether straight forward movement or moving along a path based on data from the walking state estimating part 16a and the device orientation estimating part 16b; and

a walking amount estimating part 16d that estimates walking amount from step count data and stride data from the pedometer 23; and

is configured such that the calculation estimating results data from the calculation estimating part 16 is input into the calculating part 17.

[0030]

In addition, the pedometer 23 is provided in the CPU 15 and this pedometer 23 calculates the number of steps of the pedestrian based on the 3-axis acceleration data from the 3-axis acceleration detecting part 11 and the 3-axis azimuth angle data from the 3-axis azimuth angle detecting part 13 and this number of steps data is input to the calculating part 17 and the walking amount estimating part 16d. Note that the stride data is pre-set by the pedestrian, is stored in the various types of memory 19, and read for use when estimating walking amount.

[0031]

In this manner, the mobile device of the present invention is a mobile device that detects direction of the device using the azimuth angle detecting part 13 and displays map image data on the displaying part of the device based on the detected direction of the device. The acceleration detecting part 11 detects the degree of tilt of the display surface of the displaying part of the device. The device orientation calculation estimating part 16b estimates whether the orientation of the device is in a viewing use state or in a non-viewing state based on the azimuth angle data from the azimuth angle detecting part 13 and the acceleration data from the acceleration detecting part 11.

[0032]

The device is configured so that when the orientation is in the non-viewing state, the previous map image data is retained and drawing processing is stopped, and when the orientation of the device is returned to viewing use state, the retained map image data is used to redisplay the map image on the displaying part. Note that when drawing processing is paused and calculation processing or new drawing operation of drawing itself is paused, there are cases where additionally, display accompaniment means such as a backlight is stopped, or darkened, for lower power consumption.

[0033]

In addition, a walking amount estimating part 16d is provided for calculating and estimating the amount of movement of the device based on the change pattern over time of acceleration detected by the acceleration detecting part 11 so that when the orientation of the device is restored to viewing use state, the retained map image data can be shifted according to the movement amount for redisplay.

[0034]

In addition, a walking direction estimating part 16c is provided to calculate and estimate a change amount of the device in the traveling direction based on the change pattern over time of the acceleration detected by the acceleration detecting part 11 and the change pattern of the azimuth angle detected by the azimuth angle detecting part 13 so that when the orientation of the device is returned to viewing use state, the retained map image data can be redisplayed rotated in the direction according to the amount of change in the traveling direction.

[0035]

Next, map drawing processing on the screen of the mobile device of the present invention composed of the configuration depicted in FIG. 1 will be described.

[0036]

FIG. 2 is a diagram depicting as a flowchart, a procedure for performing map drawing processing according to the orientation of the mobile device by detecting the degree of tilt and direction of the display screen of the walking navigation information display ing part using the mobile device equipped with the 3-axis azimuth angle detecting part and the 3-axis acceleration detecting part. The flowchart depicted in FIG. 2 depicts a series of processes centered on processing by the 3-axis azimuth angle detecting part 1 3, the 3-axis acceleration detecting part 11, the calculation estimating part 16 in the CPU 15, the calculating part 17, and the displ ay controlling part 18.

[0037]

First, the mobile device operates a mechanism/control setting the upper end of the screen in the direction of travel (so-called hea ding-up mode) using a map image such as a position information service and changes the facing direction of the map drawn displ ayed on the screen part based on the direction detected by the device through operation of the 3-axis azimuth angle sensor 14. In t his case, the 3-axis azimuth angle sensor 14 and 3-axis acceleration sensor 12 equipped on the mobile device measure the azimut h angle and acceleration while walking (step 31).

[0038]

Next, the orientation angle of the mobile device is calculated based on the series of acceleration data group obtained. If the orien tation angle is different, the measurement values for the azimuth angle and acceleration measured in the coordinate system fixed on the device will differ. FIG. 4 is a diagram depicting the relationship between the pedestrian coordinate system and the absolute ground coordinate system. The orientation angle normally indicates the orientation relative to the coordinate system constituting gravity and geomagnetism depicted in FIG. 4 (absolute ground coordinate system defined as coordinate system having: north-sou th direction as X-axis (positive in north direction), east-west direction as Y-axis (positive in west direction), and vertical direction as Z-axis (positive in upward direction))

[0039]

After orientation is estimated, the series of azimuth angles and acceleration data group are transformed into measurement values in the absolute ground coordinate system to enable evaluating measurement values in the same orientation.

[0040]

In addition, the transformed azimuth angle measurement value and transformed acceleration measurement value are processed b ased on an algorithm prepared for each walking mobile state of the mobile device, enabling calculating the traveling direction of t he pedestrian.

[0041]

Generally, mobile devices are carried and held in various different states. For example, various states can be considered such as a pedestrian walking while viewing the screen with a map displayed and navigation is being provided, the pedestrian is walking with the mobile device inserted into a chest pocket, where the orientation of the mobile device is generally constant while walkin g, such as being held in the hand, but the arm is being swung alongside the body, or the mobile device may be placed in a satchel, or the like.

[0042]

When a pedestrian walks while viewing a map screen, there are cases where the screen is in portrait, and cases where the screen is in landscape; however, the angle of the device display screen is generally within a constant angle range because the informatio n is being viewed. If not being viewed, the angle leaves this range.

[0043]

FIG. 3 is a diagram defining the orientation angle based on the usage state of the mobile device display screen. A general case o f having the device in landscape and the tip end of the device facing the walking travel direction as viewed from the pedestrian's body is defined as the device orientation reference. Here, the change in orientation angle of the device pitch angle direction is def ined as α and the change in orientation angle in the roll angle direction as β. The state in which the display screen of the device is viewed by the pedestrian using the device, that is, the state of "viewing the display screen", is that these two angles α and β are wi thin a prescribed range. ($\alpha_1 \leq \alpha \leq \alpha_2$, $\beta_1 \leq \beta \leq \beta_2$). Therefore, being outside of this angle range for a prescribed amount of time or more can be specified as a pedestrian using the device "is not viewing the display screen".

[0044]

In addition, in the case that a pedestrian is walking and using pedestrian navigation equipment, the operation thereof is primarily one of two device carrying states of either holding the mobile device in a hand and walking while viewing a map displayed on th e mobile device or holding the mobile device in a hand and swinging an arm until reaching a landmark point after confirmation.

[0045]
In the two states described above, in other words 1) case of walking with the mobile device held in a hand and device orientation fixed for the most part, and 2) holding the mobile device in a hand and swinging an arm while walking. When there is a condition where the pedestrian is temporarily not using the map, switching to low power consumption mode or optimal map image display that does not cause an uncomfortable feeling according to changes in the "viewing display screen/not viewing display screen" state will be described below as an embodiment.

[0046]
[Operation Explanation 1]
First, for the case that the mobile device is held in a hand and the device orientation is in general fixed, the method and operation of switching to low power consumption or optimal map image display to not cause an uncomfortable feeling according to changes in the "viewing the screen/not viewing the screen" state, will be described below.

[0047]
In the case that a state where the pedestrian is temporarily not viewing the device (case of device being in a non-viewing state such as the arm lowered) while holding the mobile device in a hand and using the device in a generally fixed orientation, the amount of change in the orientation angle of the pitch angle direction or roll angle direction of the device, α, β will be calculated and estimated to be outside a prescribed range ($\alpha 1 \leq \alpha \leq \alpha 2$, $\beta 1 \leq \beta \leq \beta 2$) for a prescribed amount of time or longer (step 32), and it is determined that the pedestrian is not viewing the device screen. The upper and lower limits of the prescribed range α1, α2, β1, β2 can be
specified for each device based on the shape, design, and usage method of the mobile device, as well as the mounting position of the acceleration sensor. When it is determined to be outside the prescribed range, the map image data displayed immediately beforehand is retained in display memory (step 33), and map image processing is halted (step 34), to achieve low power consumption. In a normal mobile device, map drawing processing performs rewriting at prescribed time intervals so if there is no halt processing, the map will be drawn at an orientation angle and azimuth angle in the device coordinate system with the device in a severely tilted state and when the pedestrian again attempts to view the mobile device, the instant the orientation of the device is returned to the viewing use state, the heading direction of the map will be a different direction than the actual direction the pedestrian using the device is facing. With this operation, upon determination of returning to viewing use state (step 35) and redisplaying retained image data, the map image previously being viewed on the screen is displayed (step 36) so that navigation information that does not cause discomfort to the pedestrian using the device is provided.
[0048]

[Operation Explanation 2]
Next, method and operation are described below for switching to low power consumption or optimal map image display for not causing discomfort according to before and after determining a "not viewing display screen" state for the case the mobile device is being held in a hand, arm is being swung, and walking straight.

[0049]
In the case of holding the mobile device in a hand and swinging an arm, the change in angle of the orientation angle for the pitch angle or roll angle α, β of the device will be calculated and estimated to be outside a prescribed range ($\alpha 1 \leq \alpha \leq \alpha 2$, $\beta 1 \leq \beta \leq \beta 2$) for a prescribed amount of time or longer (step 32), so the state is determined to be the pedestrian is not viewing the device screen, and the map image data displayed prior to transitioning to this state is retained in display memory (step 33), and the map drawing processing is halted (step 34), to achieve low power consumption. In a normal mobile device, map drawing processing performs rewriting at prescribed time intervals so if there is no halt processing, the map will be drawn at an orientation angle and azimuth angle in the device coordinate system with the mobile device held in a hand and being swung as the pedestrian walks while swinging their arm, and when the pedestrian again attempts to view the mobile device, the instant the orientation of the device is returned to the viewing use state, the heading direction of the map will be a different direction than the actual direction the pedestrian using the device is facing. In addition, in this case the pedestrian will move forward a certain amount by walking and upon returning
to a viewing use state, just redisplaying the retained image data will lead to offset in this map and the actual current position of the pedestrian.

[0050]

In this operation, the number of steps is calculated using data from the azimuth angle detecting part and the acceleration detecting part in the CPU, enabling calculating walking distance in a straight line by multiplying by the stride (step 31; method of calculating number of steps, for example as indicated in Patent Document 3), so when it is determined that the orientation angle is within

the prescribed range, returning the device to the viewing use state (step 35), the heading up direction on the map displaying the map image when the screen was being viewed is shifted by an amount equivalent to this movement distance (step 36), providing navigation information without discomfort to the pedestrian.

[0051]
[Operation Explanation 3]
Next, in the case that the pedestrian walks along a path while holding the mobile device in a hand and swinging their arm, the method and operation of switching to low power consumption or optional map image display so as not to cause discomfort according to before and after the "non-viewing the display screen" state, will be described below.
[0052]
In addition to the aforementioned operation explanation 2, in the case that the pedestrian walks not only in a straight line, but als o along a path, the pedestrian advances a certain distance by walking and also changes direction, so upon the device returning to viewing use state, just redisplaying the retained image data may cause an offset of the image data with the actual current position and direction of the pedestrian on the map.
[0053]
In the present embodiment, the CPU calculates and estimates walking direction in addition to number of steps using data from t he azimuth angle detecting part and acceleration detecting part in the CPU (step 37), and upon the device returning to viewing us e state, when the map image previously being viewed on the screen is displayed, the image is rotated by the direction change angle in addition to the distance equivalent to the movement on the path (step 38) (in other words displayed with distance shifted and direction change rotated), so navigation information that does not cause discomfort to the pedestrian using the device can be provided.
[0054]
Note that with regards to the present embodiment, walking direction estimating method in the device for the case the pedestrian is using the mobile device for pedestrian navigation while walking and holding the device in a hand.
[0055]
The orientation angle of the mobile device is as described above, but strictly speaking, is defined differently based on the carrying state of the mobile device. For example, if the mobile device is in general fixed as in the case that the pedestrian is walking while looking at the map screen, there is no change in orientation so defining the orientation angle is simple but in the case of holding in a hand and swinging alongside the body, the orientation is changing from moment to moment so orientation is defined for a specific point in time. The specific time point may be, for example, the moment when the arm passes through the lowest point.

[0056]
In addition, calculating the travel direction of the pedestrian is as described above; however, if walking distance is calculated by multiplying the number of steps by the stride and combined with walking direction, equivalent movement position can be known, enabling autonomous navigation. The method for calculating the number of steps is, for example, indicated in Patent Document 3.

[0057]
In the case of a pedestrian navigation device equipped with GPS, when positioning by GPS is successful, the current position is updated based on information obtained from GPS, and if positioning using GPS is not being performed, correcting the current po sition using autonomous navigation enables not only more detailed correction of the current position, but also continuation of nav igation inside or near buildings where GPS signal cannot be received or where positioning accuracy is poor.

[0058]
A 3-axis cartesian coordinate system fixed on the pedestrian with the travel direction of the pedestrian taken as the X-axis, the h orizontal direction orthogonal to the travel direction as the Y-axis, and the vertical direction as the Z-axis will be described (FIG. 4). The 3-axis cartesian coordinate system fixed to the pedestrian is hereinafter referred to as a pedestrian coordinate system. The mobile device is fixed in a arbitrary orientation relative to the pedestrian coordinate system. The coordinate system of the mobile device (FIG. 5, in other words coordinate system composed of the measurement axes of the sensor) is called the device coordinat e system below. FIG. 5 is a diagram depicting the relationship between the device coordinate system and the absolute ground coo rdinate system and in the diagram, code 41 is a 3-axis azimuth angle sensor, 42 is a 3-axis acceleration sensor, and 43 is a mobile device with navigation equipment.

[0059]
<In a Generally Fixed Orientation While Walking>
First, the acceleration as viewed from the pedestrian coordinate system will be described.
[0060]
FIGS. 6(a) to 6(d) are diagrams depicting walking images of a pedestrian when the orientation of the mobile device is, in genera l, fixed. During normal walking, the motion acceleration is generally measured in the pedestrian coordinate system as follows. In other words, the dominant acceleration is acceleration in the vertical direction (Z-axis) and is observed as cyclical data with the ti me for one step as one cycle (see Zamp in FIG. 8). Acceleration in the travel direction (X-axis) also has an acceleration direction and a deceleration direction for each step and is observed as cyclical data with one step as one cycle (see Xamp in FIG. 8). Experi mentally, it is known that the component of the cycle for one step of acceleration in the travel direction has a roughly 90 degree p hase difference from the cycle of one step of acceleration in the vertical direction. Acceleration in the lateral direction (Y-axis) os cillates opposite for each step and therefore is observed as cyclical data with two steps as one cycle (see Yamp in FIG. 8). The co mponent of one step of the cycle in the lateral direction is small. FIG. 8 depicts the frequency spectrum of the acceleration measu red in the device coordinate system when walking with the pedestrian coordinate system and the device coordinate system approx imately aligned (when walking while maintaining the orientation depicted in FIG. 6(d)).
[0061]
Next, the traveling direction of the pedestrian as viewed from the device coordinate system will be described.
[0062]
Of the frequency components with a period of one step of the measured acceleration in the device coordinate system, if the verti cal direction component can be removed, the strongest direction of the frequency components with a period of one step remaining is the travel direction as viewed from the device coordinate system of the pedestrian (at this point the motion line is known but th e front and back are unknown). Furthermore, the facing direction (front/back on the motion line) can be known by comparing the frequency component phase of the acceleration in the vertical direction with period of one step and the frequency component pha se of the acceleration other than the vertical direction (in other words, acceleration in the travel direction) with period of one step. When used for pedestrian navigation, converting the travel direction as viewed from the device coordinate system to a direction as viewed from the absolute ground coordinate system, enables calculating the walking direction.
[0063]
Next, the orientation angle of the device coordinate system relative to the absolute ground coordinate system will be described.
[0064]
In order to remove the vertical direction component from the acceleration measured for the device measurement coordinate syst em, the vertical direction as viewed from the device coordinate system must be known. In addition, in order to achieve pedestrian navigation, the direction from which the pedestrian has come, as viewed from the device coordinate system, must be known. In o ther words, the orientation angle of the device coordinate system relative to the absolute ground coordinate system is needed.
[0065]
Next, calculation of the orientation angle will be described.
[0066]
The orientation angle of the device coordinate system relative to the absolute ground coordinate system is determined as follow s. In other words, if a person is walking stably in a straight line, their speed of walking increases and decreases in one step but av erage speed does not change for each step. Furthermore, since the mobile device is assumed to have a generally constant orientati on, the integral value of the acceleration for one step of the dynamic acceleration (the total acceleration measured minus the gravi tational acceleration) of the acceleration measured in the device coordinate system is 0 (because, if it were not 0, the speed would change with each step). In other words, if the total acceleration measured in the device coordinate system (gravitational accelerat ion + motion acceleration) is integrated over one step, only the gravitational acceleration remains. From the gravitational accelera tion G and geomagnetism M obtained in this manner, the orientation of the mobile device can be calculated. Since it can be assu med that geomagnetism G [sic] changes very little when walking in a straight line, a measurement value at a suitable point may b e used as a representative value, or an average value over a specified period may be used. The unit vectors e_x, e_y, and e_z, represen ting the x, y, and z coordinate axes of the device coordinate system as viewed from the absolute ground coordinate system are set to
[0067]
[Eq. 1]
[0068]

$$Z = \begin{bmatrix} e_x & e_y & e_z \end{bmatrix} = \begin{bmatrix} \dfrac{G \times M \times G}{|M| \cdot |G|^2} & \dfrac{M \times G}{|M| \cdot |G|} & \dfrac{-G}{|G|} \end{bmatrix} \quad \cdots (1)$$

[0069]
Next, calculation of the walking direction will be described.
[0070]
After determining the orientation, the acceleration measured in the device coordinate system is coordinate transformed into values measured in the absolute ground coordinate system. The value X_U measured in the device coordinate system is transformed to a measurement value X_g in the absolute ground coordinate system using the following formula. Namely:
[0071]
[Eq. 2]

$$x_g = Z^T x_U \quad \cdots (2)$$

[0072]
The Z-component of the coordinate converted acceleration becomes the acceleration in the vertical direction. When one step of X, Y components of coordinate converted acceleration is taken as a period and frequency components are calculated, the direction indicated by the amplitude ratio indicates the walking direction (motion line) of the pedestrian. Furthermore, by comparing the phase of the frequency component of the Z component of the coordinate converted acceleration with one step as a period and the phase of the frequency components of the X, Y components with one step as a period, the walking facing direction of the pedestrian can be known. A Fourier transform is applied to the acceleration a_g converted to the absolute ground coordinate system, with amplitudes A_x, A_y, and A_z and phases φ_x, φ_x, φ_x of the frequency components corresponding to the period of one step to calculate the direction of travel θ_d using the following equation.
[0073]
[Eq. 3]
[0074]

$$\theta_d = \mathrm{Tan}^{-1}\left(\frac{\mathrm{sgn}(\varphi_y - \varphi_z - \pi) A_y}{\mathrm{sgn}(\varphi_x - \varphi_z - \pi) A_x} \right) \quad \cdots (3)$$

[0075]
<In the Case of Swinging the Device>
Acceleration as viewed from the device coordinate system when walking in such a manner that the device coordinate system and the pedestrian coordinate system match when the arm reaches the lowest point will be described below.
[0076]
FIG. 7(a) to (c) are diagrams depicting a case of walking while swinging an arm while holding the mobile device in a hand. Thus, the mobile device oscillates pendulum-like as viewed from the pedestrian coordinate system. As depicted in FIG. 7(a), it is assumed that the device coordinate system and the pedestrian coordinate system match with the pedestrian holding the mobile device in hand and lowering the arm. Assuming that the pedestrian starts walking from this state and periodically passes through this state (the machine coordinate system and the pedestrian coordinate system match) during walking, the motion acceleration in the device coordinate system is roughly measured as follows.
[0077]
The arm oscillates pendulum-like, and the Z-component acceleration in the device coordinate system passes through the lowest point each time one step is taken and the frequency component with a period of one step becomes dominant (see Zamp in Figure 9). However, as can be seen from other (X, Y) components, the arm passes through the lowest point in the same direction every two steps so basically the measurement value is set as periodic data with a period of two steps (see Xamp, Yamp in FIG. 9).

The Y (horizontal direction) component is generated by the left-right sway of the pedestrian while walking, and is usually quite small compared to the X (traveling direction) component. Of the frequency components with a period of two steps, the phase difference of the X and Z components in the device coordinate system has experimentally been found to be approximately 0 degrees. FIG. 9 indicates a frequency spectrum of the acceleration measured in the device coordinate system with the pedestrian coordinate system matched to the device coordinate system at the lowest point when walking while swinging an arm and holding the mobile device.

[0078]

Next, calculation of the orientation angle of the device coordinate system relative to the absolute ground coordinate system (when the arm passes through the lowest point) will be described.

[0079]

A pedestrian is holding the mobile device in a hand and is walking while swinging the hand, as described above. In the case that how the mobile device is held is arbitrary, the walking direction can be estimated as follows. That is, first, a value obtained by multiplying the sign of the DC component by the frequency component having a period of one step of the acceleration measurement value of each axis is obtained, and this value is defined as G. Next, let M be the geomagnetism when the hand passes through the lowest point. The orientation of the device coordinate system with respect to the absolute ground coordinate system when the arm passes through the lowest point is obtained by the following equation.

[0080]

[Eq. 4]

$$Z = \begin{bmatrix} e_x & e_y & e_z \end{bmatrix} = \begin{bmatrix} \dfrac{G \times M \times G}{|M| \cdot |G|^2} & \dfrac{M \times G}{|M| \cdot |G|} & \dfrac{-G}{|G|} \end{bmatrix} \quad \cdots (4)$$

[0081]

Next, calculation of the walking direction will be described.

[0082]

After determining the orientation, the acceleration measured in the device coordinate system is coordinate transformed into values measured in the absolute ground coordinate system. The value X_U measured in the device coordinate system is transformed to a measurement value X_g in the absolute ground coordinate system using the following formula. Namely:

[0083]

[Eq. 5]

$$x_g = Z^T x_U \quad \cdots (5)$$

[0084]

When two steps of X, Y components of coordinate converted acceleration is taken as a period and frequency components are calculated, the direction indicated by the amplitude ratio indicates the traveling direction of the pedestrian. Furthermore, by comparing the phase of the frequency component of the Z component of the coordinate converted acceleration with two steps as a period and the phase of the frequency components of the X, Y components with two steps as a period, the walking facing direction of the pedestrian can be known. A Fourier transform is applied to the acceleration a_g converted to the absolute ground coordinate system, with amplitudes A_x, A_y, and A_z and phases φ_x, φ_x, φ_x of the frequency components corresponding to the period of two steps to calculate the direction of travel θ_d using the following equation.

[0085]

[Eq. 6]

[0086]

$$\theta_d = \mathrm{Tan}^{-1}\left(\frac{\mathrm{sgn}\left(\cos\left(\varphi_y - \varphi_z\right)\right) A_y}{\mathrm{sgn}\left(\cos\left(\varphi_x - \varphi_z\right)\right) A_x} \right) \quad \cdots (6)$$

[0087]

As described above, with the present invention, in walking navigation using a mobile device equipped with azimuth detecting means and acceleration detection means, the device can be switched to low power consumption in response to changes in the state of the holding orientation of the device of "looking at the display screen/not looking at the display screen" state, and navigation that does not cause stress to the user by displaying optimal images with no sense of discomfort can be provided.

[0088]

In the embodiment described above, only map image data has been described, but topographic map image data or navigation information can be handled in the same way, and they can be displayed not only two-dimensionally but also three-dimensionally and can include scenery drawings and photographic data. Here, the navigation information refers to various display information such as distances to some target points on the route to a preset destination, directions of travel indicated by arrows, and the like. In addition to map image data, the present invention is clearly applicable to cases where image can be shifted or facing direction can be changed (rotated) using a mobile device. For example, it is possible to incorporate not only walking navigation but also rendering of virtual space game functions using mobile devices.

BRIEF DESCRIPTION OF THE DRAWINGS

[0089]

FIG. 1 is a block diagram depicting the internal device configuration of a mobile device according to the present invention;

FIG. 2 is a diagram depicting a procedure for performing map drawing processing according to the orientation of the mobile device by detecting the degree of tilt and direction of the display screen of the walking navigation information displaying part using the mobile device equipped with the 3-axis azimuth angle detecting part and the 3-axis acceleration detecting part as a flowchart;

FIG. 3 is a diagram defining the orientation angle based on the usage state of the mobile device display screen;

FIG. 4 is a diagram depicting a relationship between the pedestrian coordinate system and the absolute ground coordinate system;

FIG. 5 is a diagram depicting the relationship between the device coordinate system and the absolute ground coordinate system;

FIG. 6(a) to 6(d) are diagrams depicting walking images of a pedestrian in the case that the orientation of the mobile device is, in general, fixed;

FIG. 7(a) to (c) are diagrams depicting a case of walking while swinging an arm while holding the mobile device in a hand;

FIG. 8 is a diagram depicting a frequency spectrum of measured acceleration values when walking with the device coordinate system substantially fixed to the pedestrian coordinate system; and

FIG. 9 is a diagram depicting a frequency spectrum of acceleration measurement values when walking while holding the mobile device in a swinging arm.

DESCRIPTION OF REFERENTIAL NUMERICALS

[0090]

11. 3-axis acceleration detecting part
12. 3-axis acceleration sensor
13. 3-axis azimuth angle detecting part
14. 3-axis azimuth angle sensor
15. Central processing unit (CPU)
16. Calculation estimating part
16a. Walking state estimating part
16b. Device orientation estimating part (device orientation calculation estimating means)
16c. Walking direction estimating part (change amount calculation estimating means)
16d. Walking amount estimating part (movement amount calculation estimating means)
17. Calculating part
18. Display controlling part
19. Various types of memory
20. Display memory
21. Other units
22. Display for displaying
23. Pedometer
41. 3-axis azimuth angle sensor

42. 3-axis acceleration sensor
43. Mobile device with navigation

FIG. 1

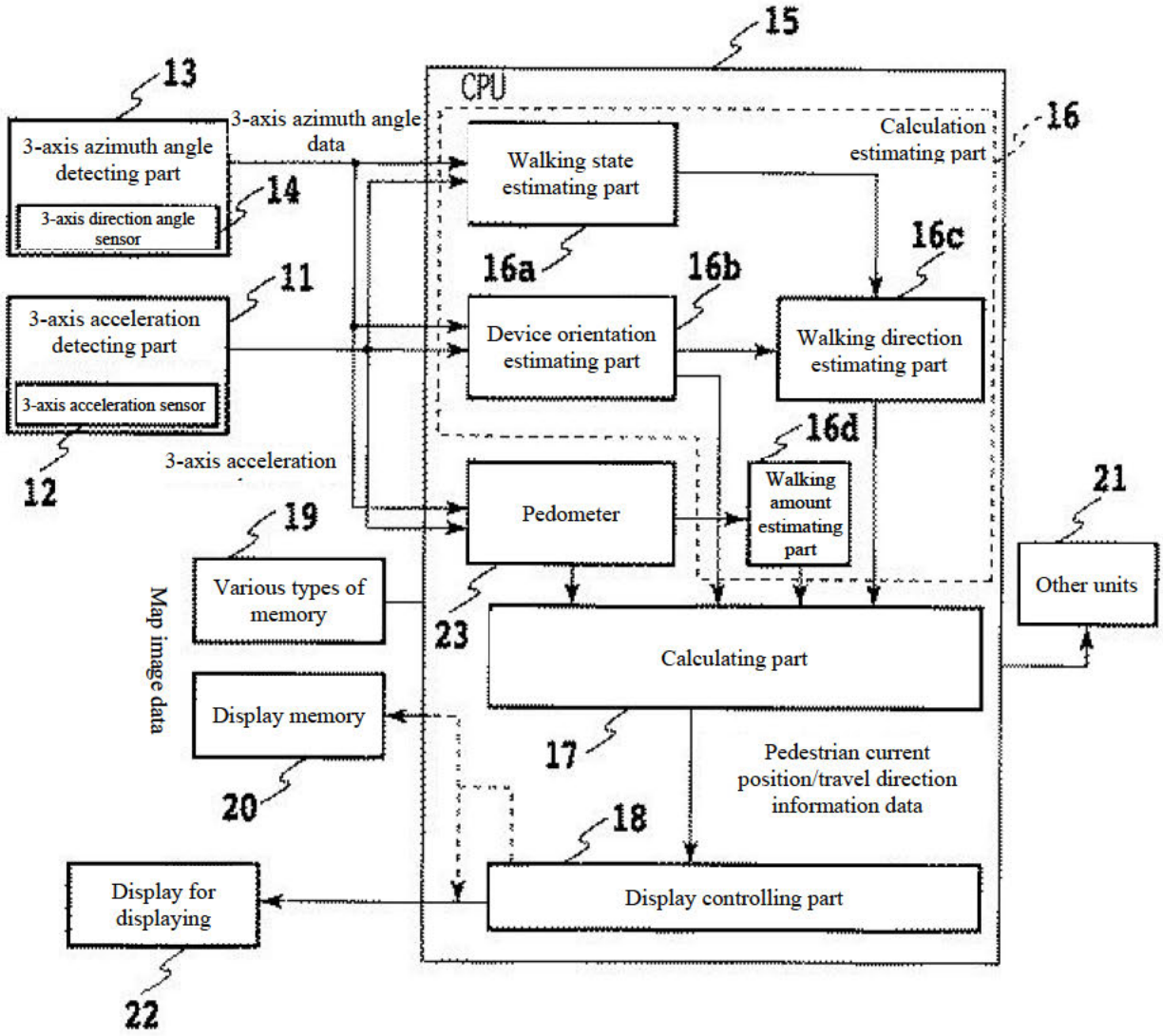
15
CPU
13
3-axis azimuth angle detecting part
3-axis direction angle sensor
14
3-axis azimuth angle data
Walking state estimating part
Calculation estimating part
16
16a
16b
16c
11
3-axis acceleration detecting part
3-axis acceleration sensor
Device orientation estimating part
Walking direction estimating part
12
3-axis acceleration
16d
Walking amount estimating part
21
19
Pedometer
Other units
Various types of memory
Map image data
23
Calculating part
Display memory
17
Pedestrian current position/travel direction information data
20
18
Display for displaying
Display controlling part
22

FIG. 2

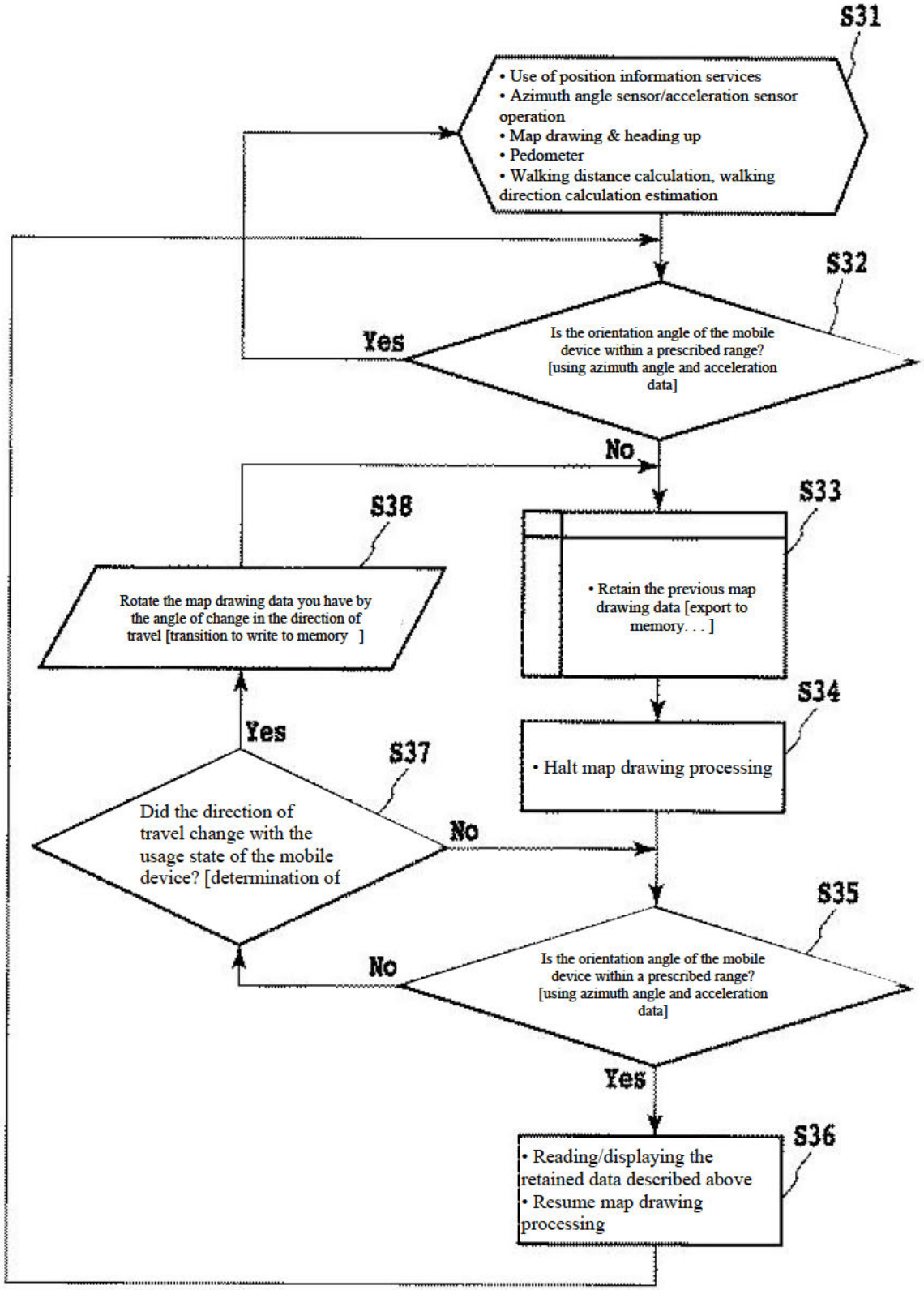
S31
• Use of position information services
• Azimuth angle sensor/acceleration sensor operation
• Map drawing & heading up
• Pedometer
• Walking distance calculation, walking direction calculation estimation
S32
Is the orientation angle of the mobile device within a prescribed range? [using azimuth angle and acceleration data]
Yes
No
S33
• Retain the previous map drawing data [export to memory. . .]
S34
• Halt map drawing processing
S35
Is the orientation angle of the mobile device within a prescribed range? [using azimuth angle and acceleration data]
No
Yes
S36
• Reading/displaying the retained data described above
• Resume map drawing processing
S37
Did the direction of travel change with the usage state of the mobile device? [determination of
Yes
No
S38
Rotate the map drawing data you have by the angle of change in the direction of travel [transition to write to memory]

FIG. 3

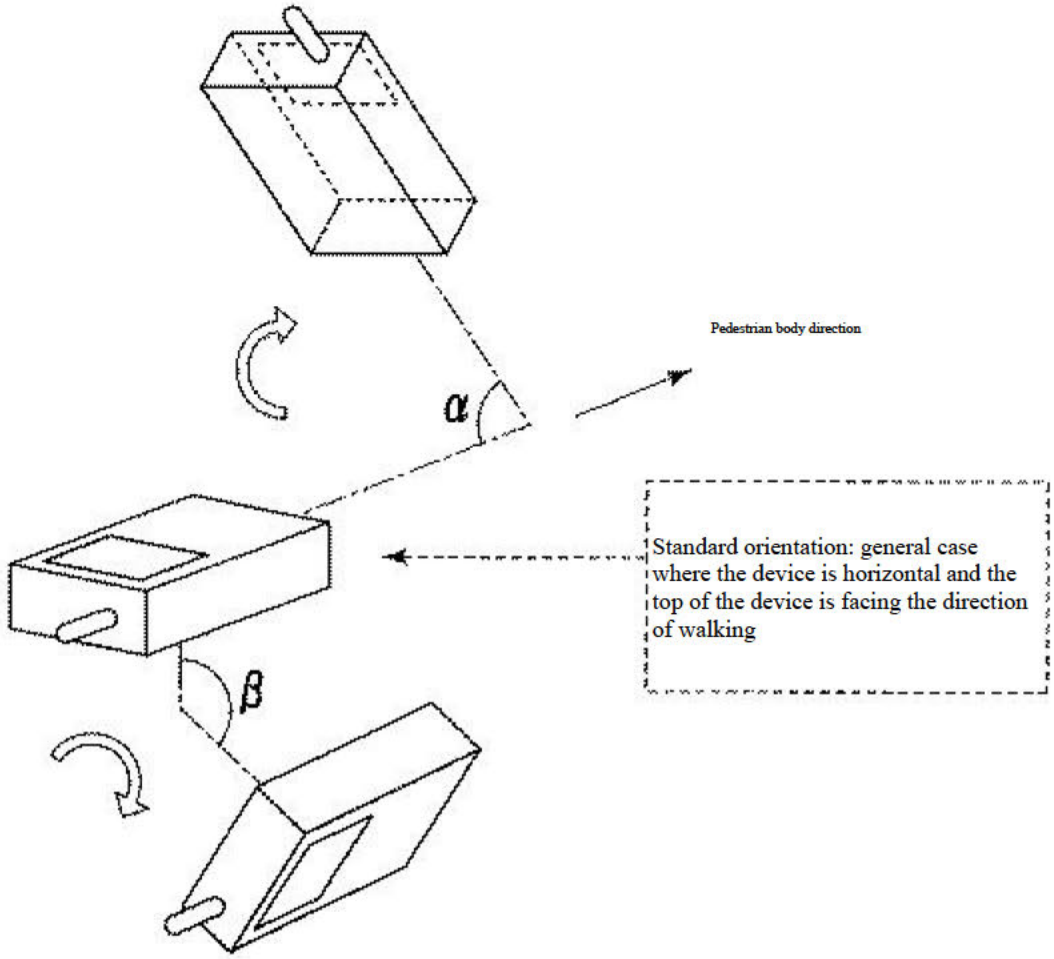
Pedestrian body direction
α
Standard orientation: general case where the device is horizontal and the top of the device is facing the direction of walking
β

FIG. 4

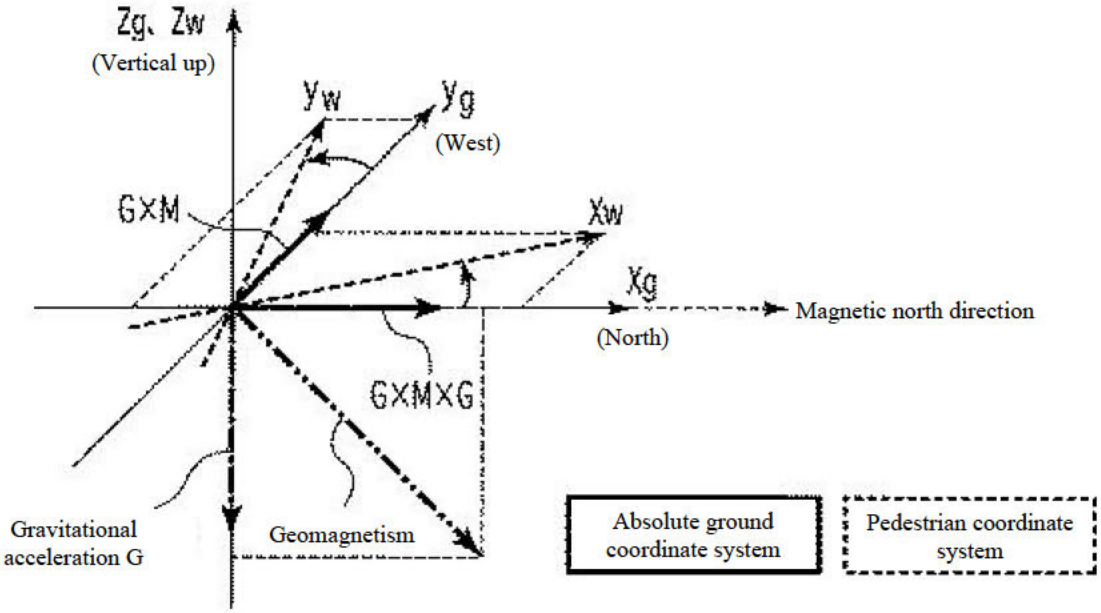
Zg、Zw
(Vertical up)
Yw
Yg
(West)
G×M
Xw
Xg
Magnetic north direction
(North)
G×M×G
Gravitational acceleration G
Geomagnetism
Absolute ground coordinate system
Pedestrian coordinate system

FIG. 5

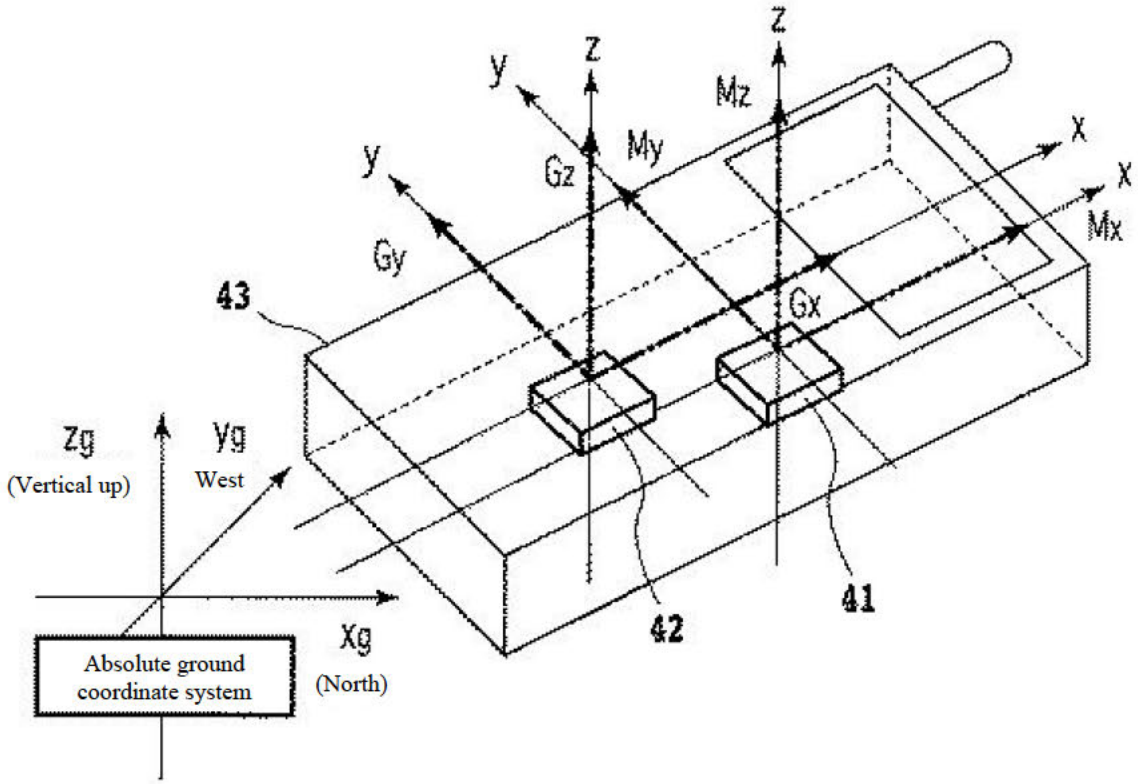
z
y
z
Mz
My
Gz
y
Gy
x
x
Mx
Gx
43
Zg
(Vertical up)
Yg
West
Xg
(North)
Absolute ground coordinate system
42
41

FIG. 6

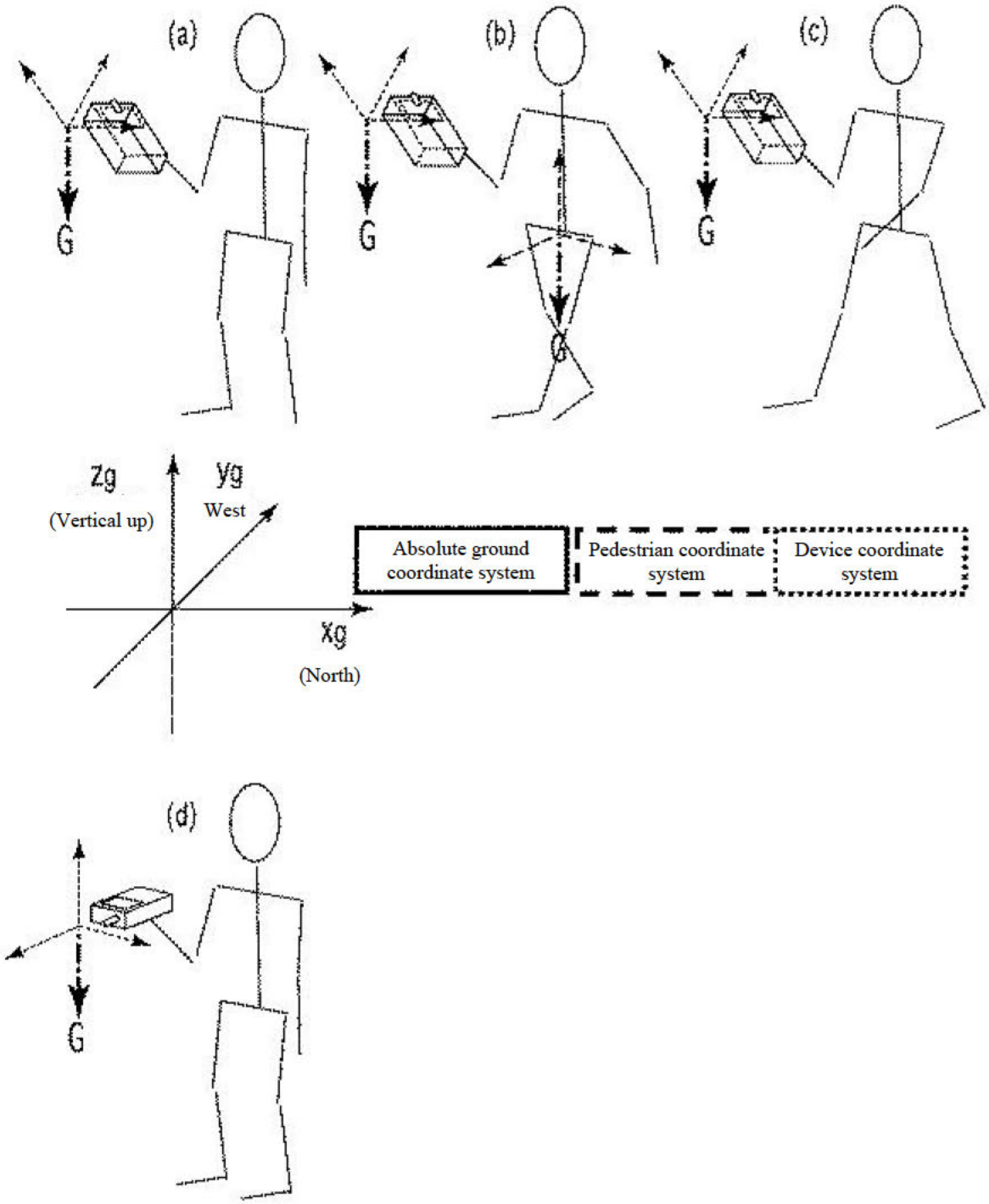
(a)
(b)
(c)
G
G
G
G
Zg
(Vertical up)
yg
West
Xg
(North)
Absolute ground coordinate system
Pedestrian coordinate system
Device coordinate system
(d)
G

FIG. 7

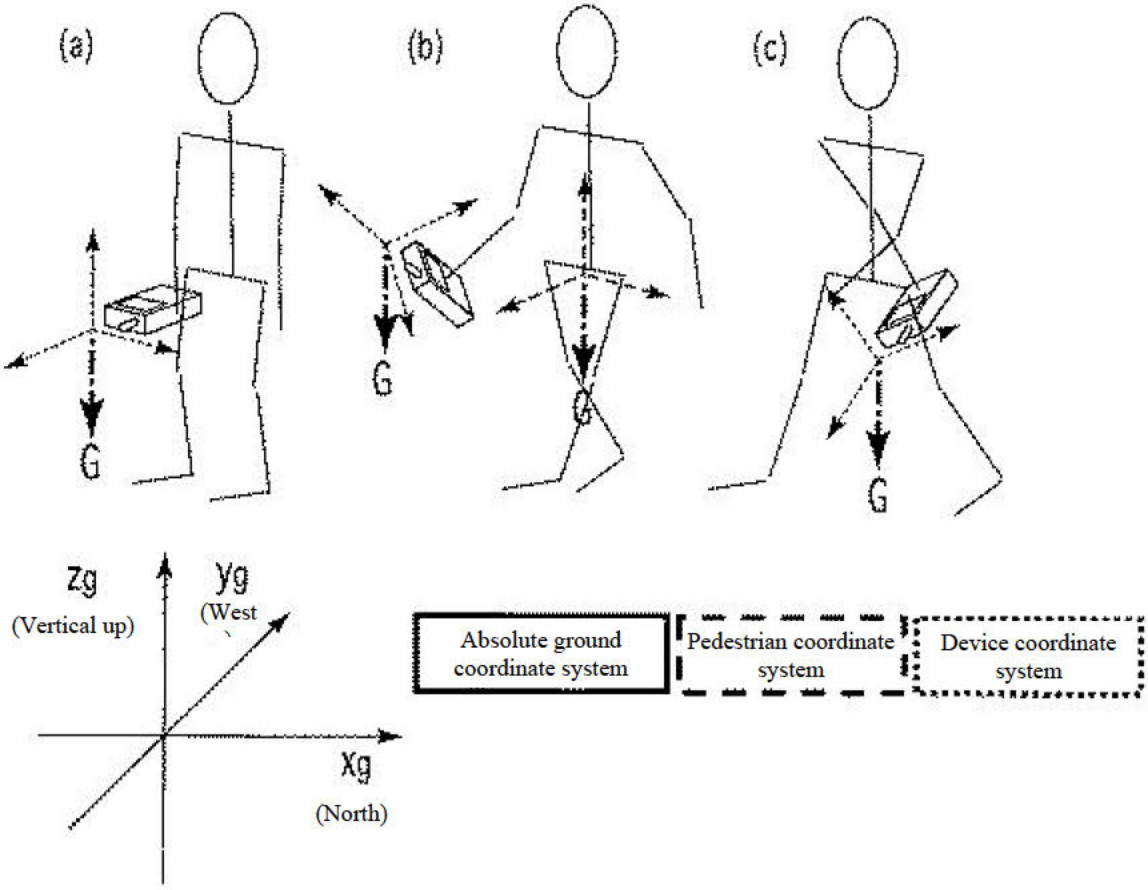
(a)
(b)
(c)
G
G
G
G
Zg
(Vertical up)
Yg
(West
Xg
(North)
Absolute ground coordinate system
Pedestrian coordinate system
Device coordinate system

FIG. 8

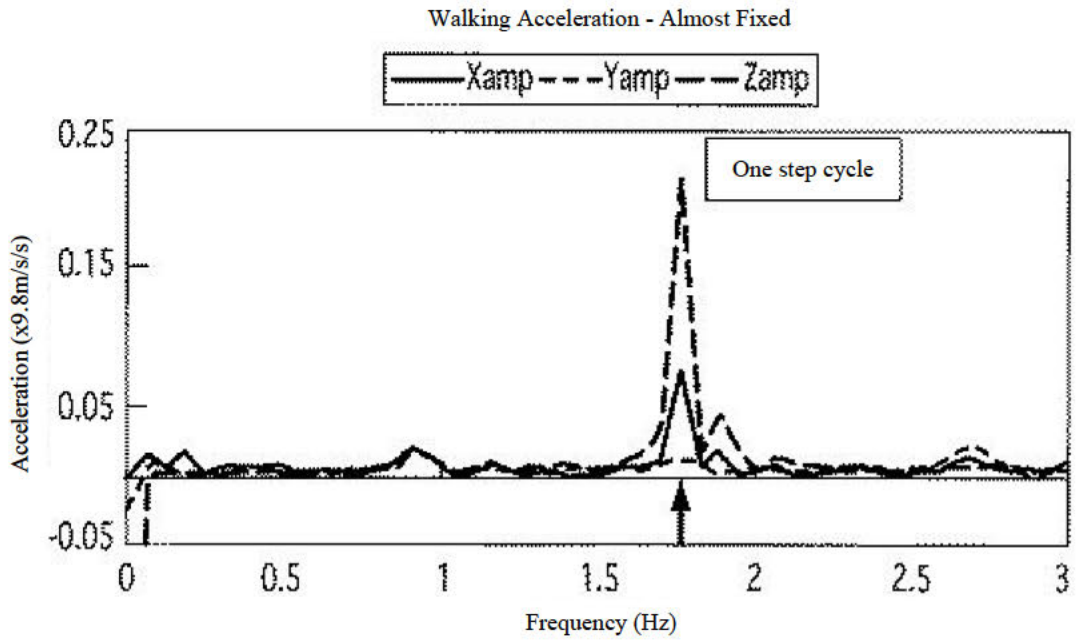
Walking Acceleration - Almost Fixed
Xamp
Yamp
Zamp
One step cycle
Acceleration (x9.8m/s/s)
0.25
0.15
0.05
-0.05
0
0.5
1
1.5
2
2.5
3
Frequency (Hz)

FIG. 9

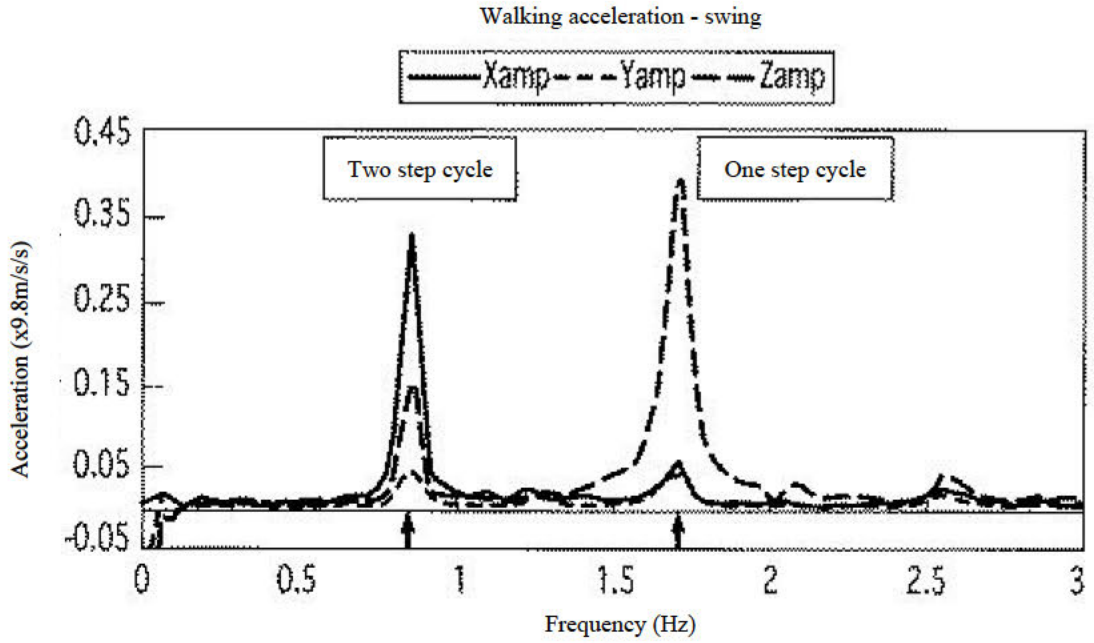
Walking acceleration - swing
Xamp
Yamp
Zamp
Two step cycle
One step cycle
Acceleration (x9.8m/s/s)
0.45
0.35
0.25
0.15
0.05
-0.05
0
0.5
1
1.5
2
2.5
3
Frequency (Hz)

Continued from front page

(51) Int.Cl.			FI			Theme code (reference)
G 06 F	3/14	(2006.01)	G 06 F	3/14	3 10 A	

F term (reference)
5B050 BA17 EA12 FA02
5B069 AA12 BB13 JA10
5H180 AA21 FF04 FF05 FF22 FF32 FF40