US007873849B2

(12) **United States Patent**
Mucignat et al.

(10) **Patent No.: US 7,873,849 B2**
(45) **Date of Patent: Jan. 18, 2011**

(54) **MOTION SENSOR DATA PROCESSING USING VARIOUS POWER MANAGEMENT MODES**

(75) Inventors: **Andrea Mucignat**, Burlingame, CA (US); **Saurabh Gupta**, Sunnyvale, CA (US)

(73) Assignee: **Apple Inc.**, Cupertino, CA (US)

(*) Notice: Subject to any disclaimer, the term of this patent is extended or adjusted under 35 U.S.C. 154(b) by 0 days.

(21) Appl. No.: **12/552,385**

(22) Filed: **Sep. 2, 2009**

(65) **Prior Publication Data**

US 2010/0235667 A1 Sep. 16, 2010

(51) **Int. Cl.**
G06F 1/26 (2006.01)
G06F 1/32 (2006.01)
G01P 15/00 (2006.01)

(52) **U.S. Cl.** **713/323**; 713/300; 713/320; 713/324; 702/141

(58) **Field of Classification Search** 713/300, 713/320, 323, 324; 702/141
See application file for complete search history.

(56) **References Cited**

U.S. PATENT DOCUMENTS

5,953,677	A	9/1999	Sato	
6,665,802	B1 *	12/2003	Ober	713/320
7,145,454	B2	12/2006	Linjama et al.	
7,382,353	B2 *	6/2008	Grady et al.	345/156
7,408,506	B2	8/2008	Miller	
2004/0181703	A1	9/2004	Lilja et al.	
2005/0164633	A1 *	7/2005	Linjama et al.	455/41.2
2006/0161377	A1 *	7/2006	Rakkola et al.	702/141
2006/0242434	A1 *	10/2006	Lee	713/300
2007/0075965	A1	4/2007	Huppi et al.	
2008/0008313	A1 *	1/2008	Fyke	379/433.01
2008/0266128	A1 *	10/2008	Leone et al.	340/669
2009/0096586	A1 *	4/2009	Tubb	340/10.33
2009/0319221	A1 *	12/2009	Kahn et al.	702/141
2010/0013778	A1 *	1/2010	Liu et al.	345/173

FOREIGN PATENT DOCUMENTS

EP	1736850	A1	12/2006
EP	1785808	A1	5/2007
WO	2006070272	A2	7/2006

* cited by examiner

Primary Examiner—Vincent T Tran
(74) *Attorney, Agent, or Firm*—Kramer Levin Naftalis & Frankel LLP

(57) **ABSTRACT**

Systems and methods for processing motion sensor data using various power management modes of an electronic device are provided. Power may be provided to a motion sensor during a first power mode of the device. In response to the motion sensor detecting a motion event with a magnitude exceeding a threshold, the sensor may transmit a wake up signal to a power management unit of the device. In response to receiving the wake up signal, the power management unit may switch the device to a second power mode. The device may provide power to a processor and load the processor with a motion sensing application when switching to the second power mode. During the second power mode, motion sensor data may be processed to determine that the motion event is not associated with an intentional user input and the device may return to the first power mode.

26 Claims, 7 Drawing Sheets

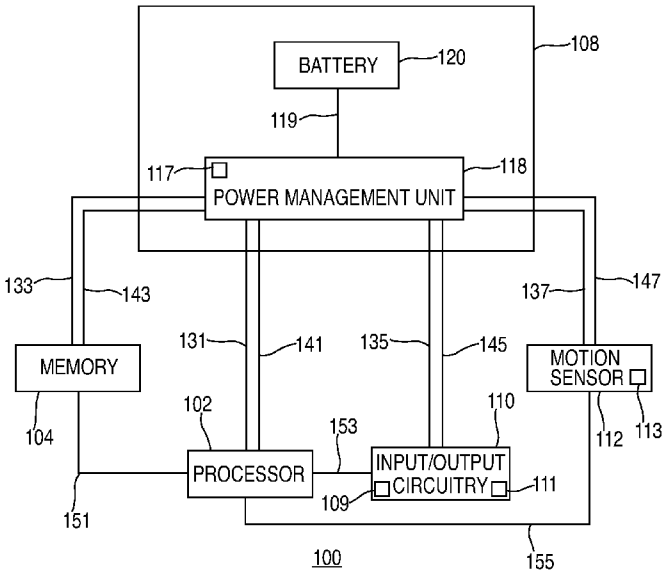

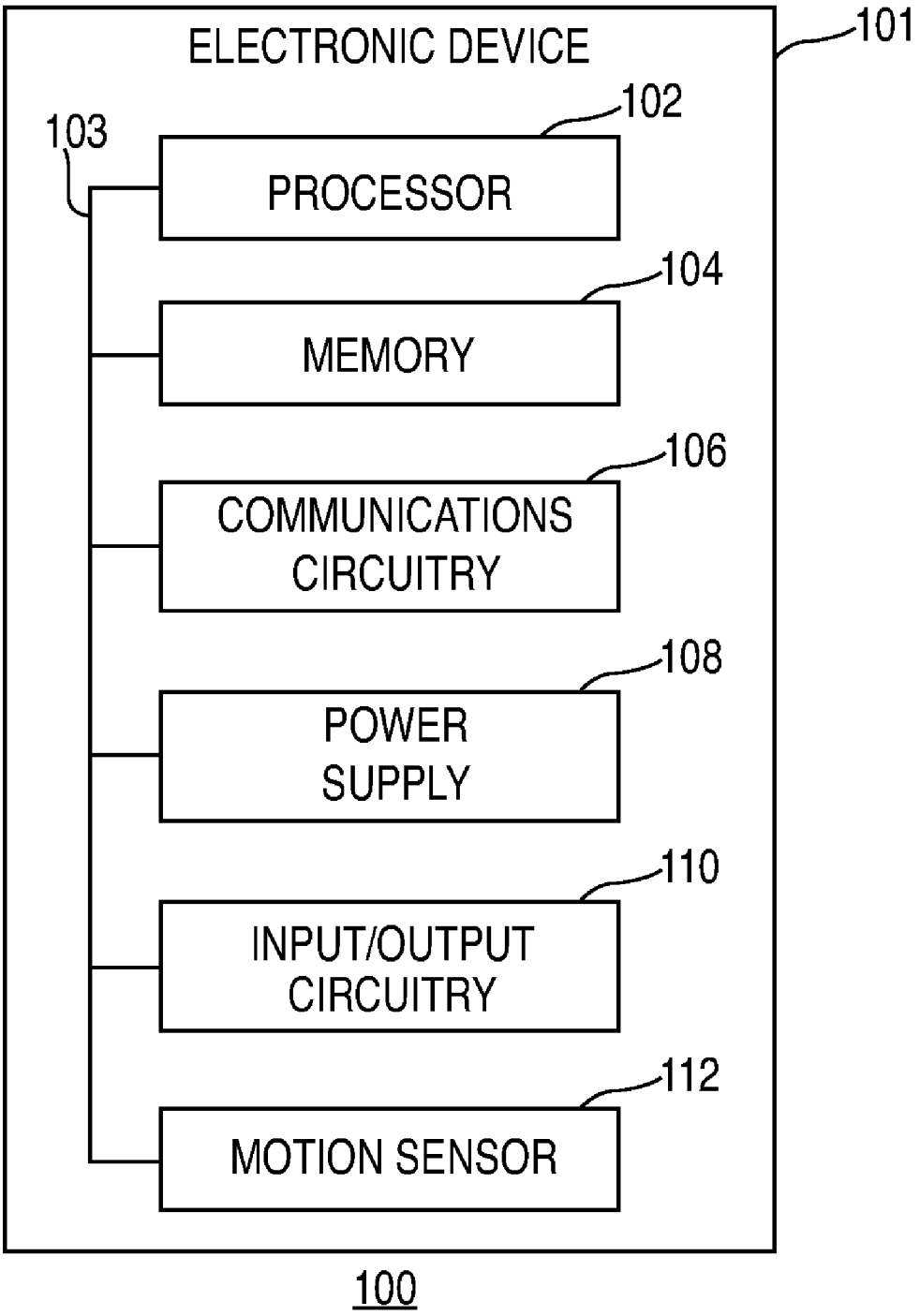
ELECTRONIC DEVICE
101
102
103
PROCESSOR
104
MEMORY
106
COMMUNICATIONS CIRCUITRY
108
POWER SUPPLY
110
INPUT/OUTPUT CIRCUITRY
112
MOTION SENSOR
100

FIG. 1

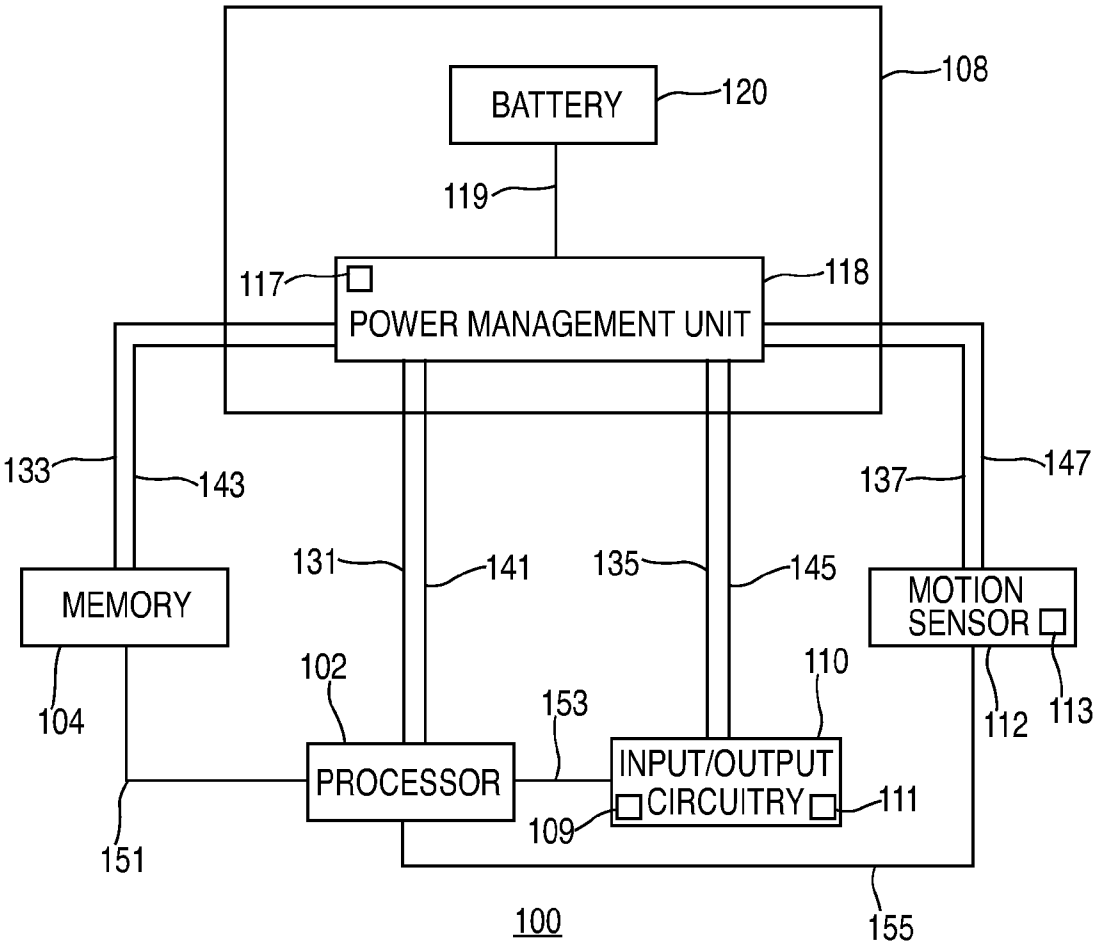
BATTERY
120
108
119
117
118
POWER MANAGEMENT UNIT
133
143
137
147
131
141
135
145
MEMORY
MOTION SENSOR
102
110
104
153
112
113
PROCESSOR
INPUT/OUTPUT CIRCUITRY
111
109
151
100
155

FIG. 2

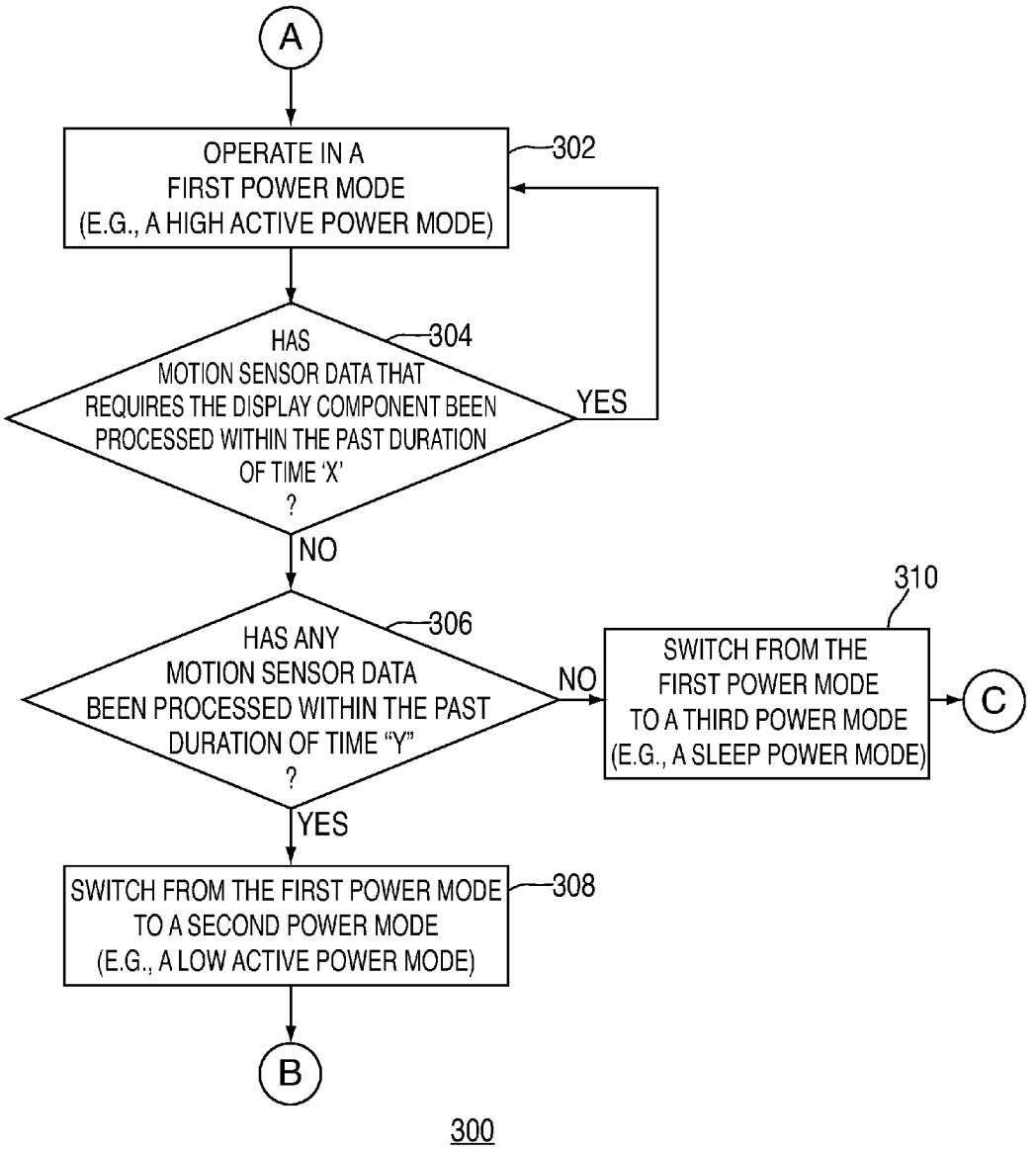
A
OPERATE IN A FIRST POWER MODE (E.G., A HIGH ACTIVE POWER MODE)
302
HAS MOTION SENSOR DATA THAT REQUIRES THE DISPLAY COMPONENT BEEN PROCESSED WITHIN THE PAST DURATION OF TIME 'X' ?
304
YES
NO
HAS ANY MOTION SENSOR DATA BEEN PROCESSED WITHIN THE PAST DURATION OF TIME "Y" ?
306
NO
SWITCH FROM THE FIRST POWER MODE TO A THIRD POWER MODE (E.G., A SLEEP POWER MODE)
310
C
YES
SWITCH FROM THE FIRST POWER MODE TO A SECOND POWER MODE (E.G., A LOW ACTIVE POWER MODE)
308
B
300

FIG. 3A

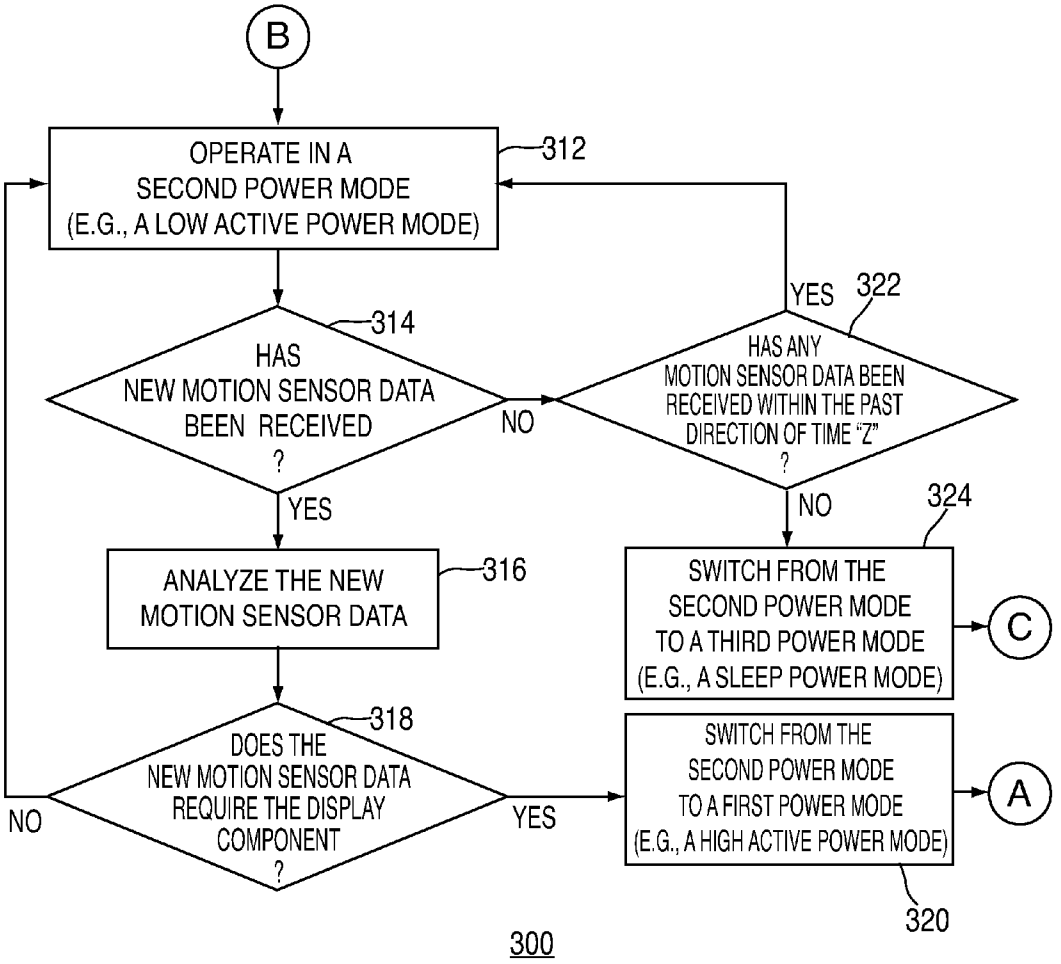
B
OPERATE IN A SECOND POWER MODE (E.G., A LOW ACTIVE POWER MODE)
312
HAS NEW MOTION SENSOR DATA BEEN RECEIVED ?
314
NO
YES
HAS ANY MOTION SENSOR DATA BEEN RECEIVED WITHIN THE PAST DIRECTION OF TIME "Z" ?
322
YES
NO
ANALYZE THE NEW MOTION SENSOR DATA
316
SWITCH FROM THE SECOND POWER MODE TO A THIRD POWER MODE (E.G., A SLEEP POWER MODE)
324
C
DOES THE NEW MOTION SENSOR DATA REQUIRE THE DISPLAY COMPONENT ?
318
NO
YES
SWITCH FROM THE SECOND POWER MODE TO A FIRST POWER MODE (E.G., A HIGH ACTIVE POWER MODE)
A
320
300

FIG. 3B

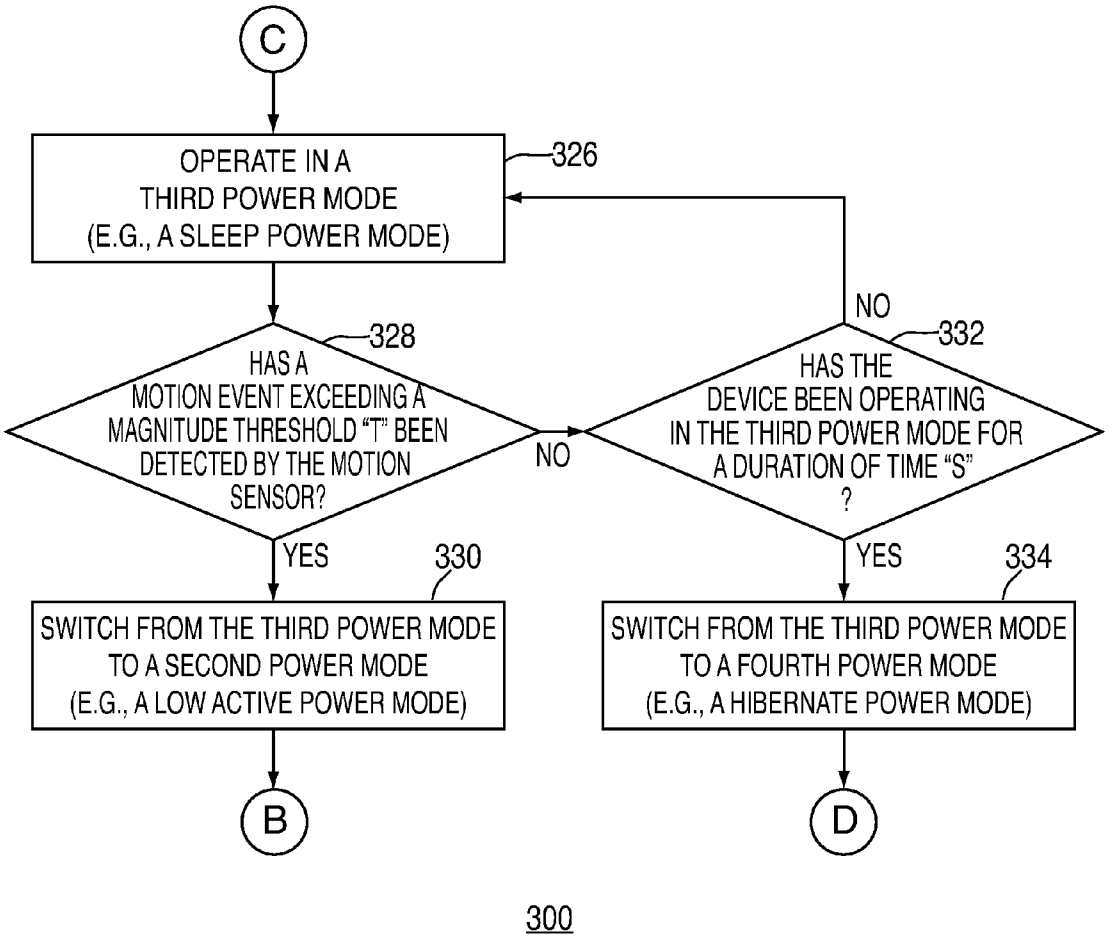
C
OPERATE IN A THIRD POWER MODE (E.G., A SLEEP POWER MODE)
326
HAS A MOTION EVENT EXCEEDING A MAGNITUDE THRESHOLD "T" BEEN DETECTED BY THE MOTION SENSOR?
328
NO
HAS THE DEVICE BEEN OPERATING IN THE THIRD POWER MODE FOR A DURATION OF TIME "S" ?
332
NO
YES
330
SWITCH FROM THE THIRD POWER MODE TO A SECOND POWER MODE (E.G., A LOW ACTIVE POWER MODE)
YES
334
SWITCH FROM THE THIRD POWER MODE TO A FOURTH POWER MODE (E.G., A HIBERNATE POWER MODE)
B
D
300

FIG. 3C

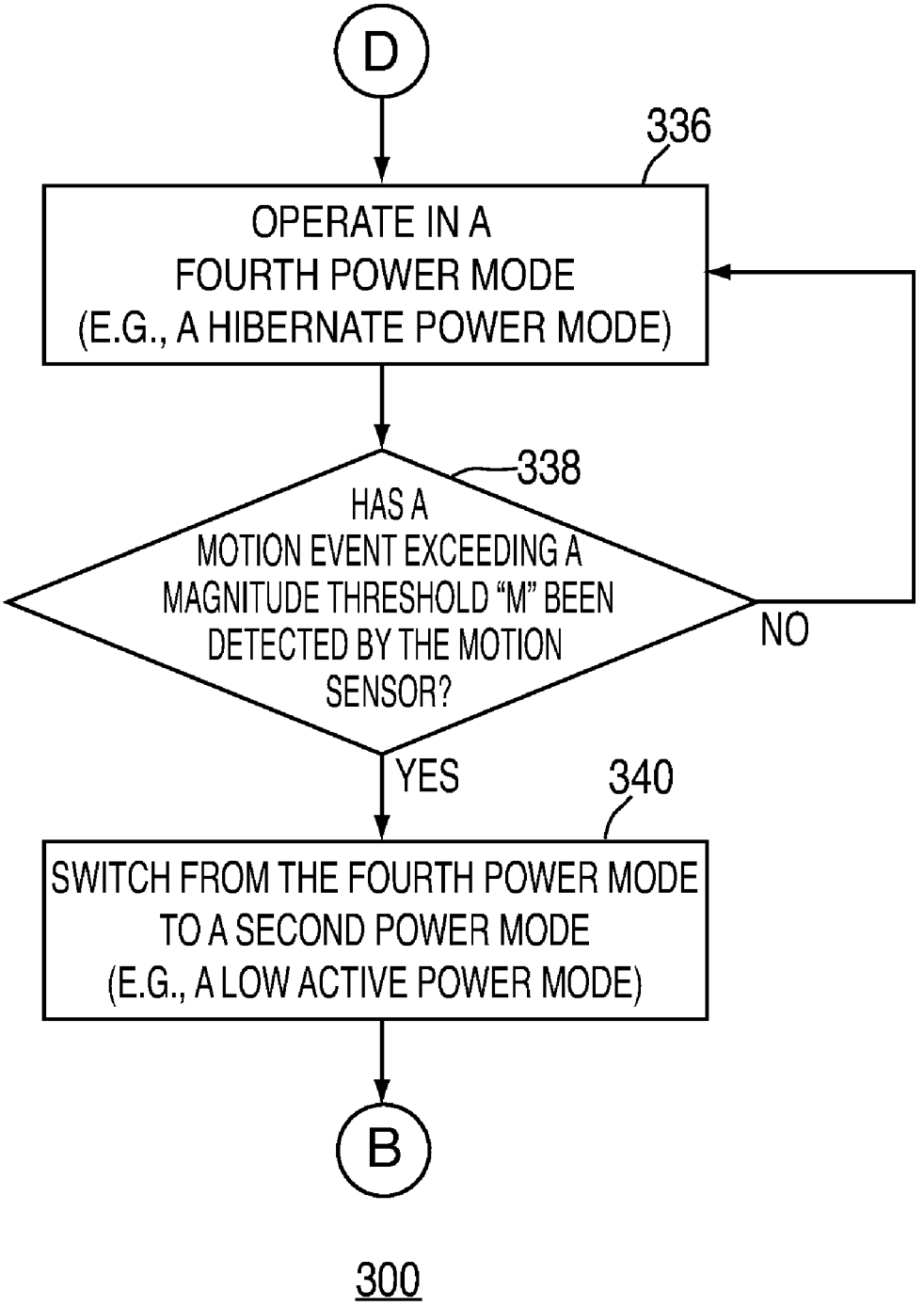
D
336
OPERATE IN A
FOURTH POWER MODE
(E.G., A HIBERNATE POWER MODE)
338
HAS A
MOTION EVENT EXCEEDING A
MAGNITUDE THRESHOLD "M" BEEN
DETECTED BY THE MOTION
SENSOR?
NO
YES
340
SWITCH FROM THE FOURTH POWER MODE
TO A SECOND POWER MODE
(E.G., A LOW ACTIVE POWER MODE)
B
300

FIG. 3D

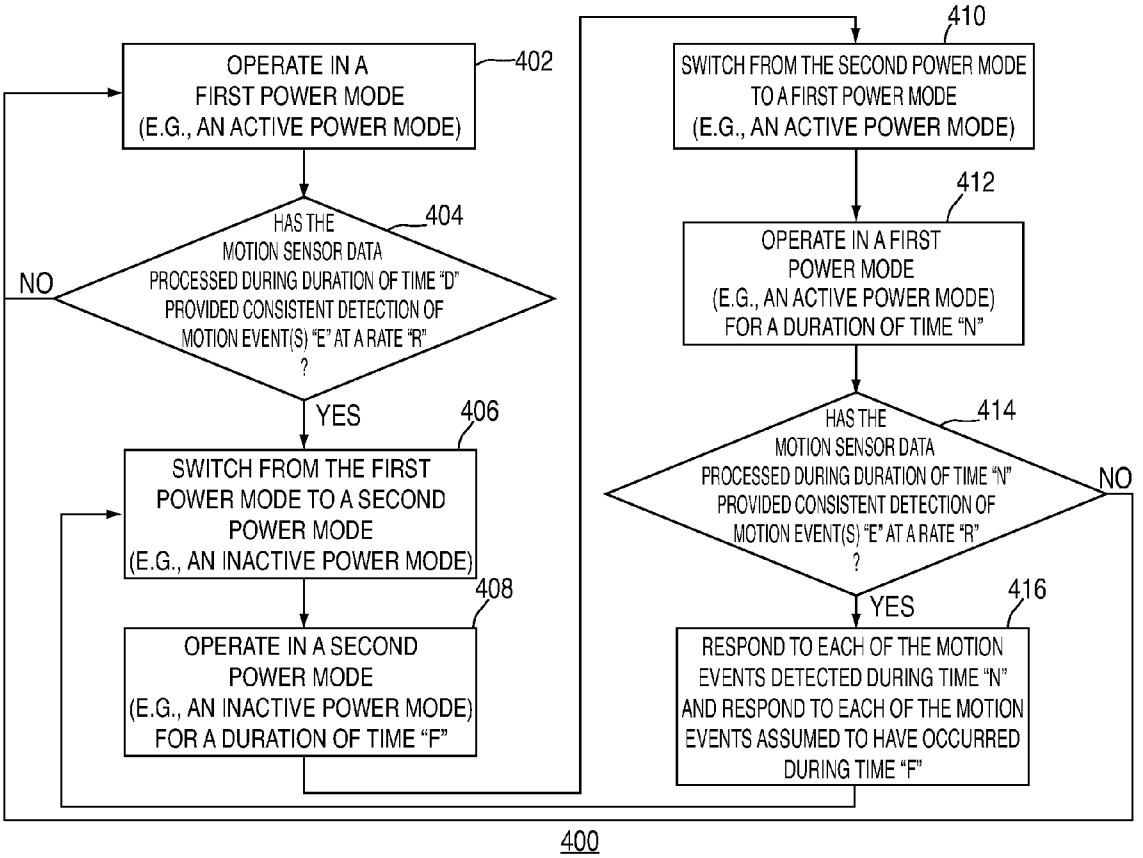
OPERATE IN A FIRST POWER MODE (E.G., AN ACTIVE POWER MODE)
402
HAS THE MOTION SENSOR DATA PROCESSED DURING DURATION OF TIME "D" PROVIDED CONSISTENT DETECTION OF MOTION EVENT(S) "E" AT A RATE "R" ?
404
NO
YES
SWITCH FROM THE FIRST POWER MODE TO A SECOND POWER MODE (E.G., AN INACTIVE POWER MODE)
406
OPERATE IN A SECOND POWER MODE (E.G., AN INACTIVE POWER MODE) FOR A DURATION OF TIME "F"
408
SWITCH FROM THE SECOND POWER MODE TO A FIRST POWER MODE (E.G., AN ACTIVE POWER MODE)
410
OPERATE IN A FIRST POWER MODE (E.G., AN ACTIVE POWER MODE) FOR A DURATION OF TIME "N"
412
HAS THE MOTION SENSOR DATA PROCESSED DURING DURATION OF TIME "N" PROVIDED CONSISTENT DETECTION OF MOTION EVENT(S) "E" AT A RATE "R" ?
414
NO
YES
RESPOND TO EACH OF THE MOTION EVENTS DETECTED DURING TIME "N" AND RESPOND TO EACH OF THE MOTION EVENTS ASSUMED TO HAVE OCCURRED DURING TIME "F"
416
400

FIG. 4

MOTION SENSOR DATA PROCESSING USING VARIOUS POWER MANAGEMENT MODES

FIELD OF THE INVENTION

This can relate to systems and methods for processing motion sensor data and, more particularly, to systems and methods for processing motion sensor data using various power management modes of an electronic device.

BACKGROUND OF THE DISCLOSURE

Electronic devices, and in particular portable electronic devices (e.g., portable media players and cellular telephones), often include one or more sensors for detecting characteristics of the device and its surroundings. For example, an electronic device may include one or more motion sensors, such as an accelerometer or gyroscope, for detecting the orientation and/or movement of the device. The electronic device may process the data generated by the motion sensors and may be operative to perform particular operations based on the processed motion sensor data. For example, an electronic device may process motion sensor data to determine the number of steps taken by a user carrying the device, thereby providing a pedometer application. This type of pedometer application may be utilized by the device over a long period of time in order to detect every step taken by a user, even when the user may not be actively interacting with the device. However, keeping certain device components active during utilization of such a pedometer application may consume a significant amount of the power available to the device.

SUMMARY OF THE DISCLOSURE

Systems, methods, and computer-readable media for processing motion sensor data using various power management modes of an electronic device are provided.

For example, in some embodiments, there is provided a method for controlling power consumption of an electronic device. The method may include providing power to a motion sensor of the device during a first inactive power mode of the device. Next, the method may include switching from the first inactive power mode to a first active power mode of the device in response to detecting a magnitude of a motion event that exceeds a threshold using the motion sensor. After the switching, the method may include returning from the first active power mode to the first inactive power mode in response to determining that the motion event is not associated with an intentional user input.

For example, the switching may include activating at least a portion of a processor of the device and loading the processor with a motion sensing application. The switching may also include instructing the processor to bypass a device component activation step of the application, such as a device component activation step that instructs the processor to at least partially activate a display output component of the device. The returning may include unloading the motion sensing application from the processor and deactivating at least a portion of the processor.

In other embodiments, there is provided a method for controlling power consumption of an electronic device. The method may include processing first motion sensor data for a first duration of time during a first active power mode of the device. Next, the method may include switching from the first active power mode to a first inactive power mode of the device in response to detecting that the first processed motion sensor data identifies a first motion event occurring a first number of times during the first duration of time at a first rate. Then, the method may include returning from the first inactive power mode to the first active power mode after a second duration of time. Next, the method may include processing second motion sensor data for a third duration of time and determining that the second processed motion sensor data identifies the first motion event occurring a second number of times during the third duration of time at the first rate. Finally, the method may include responding to a third number of the first motion event. The third number may equal the second number plus the product of the second duration of time and the rate.

For example, the second duration of time may be longer than the third duration of time. In some embodiments, the first motion event may be a user stepping event and the method may include storing the third number in a counter indicative of the amount of steps taken by a user of the device. In some embodiments, the switching from the first active power mode to the first inactive power mode may include unloading a motion sensing application from a processor of the device and deactivating at least a portion of the processor.

BRIEF DESCRIPTION OF THE DRAWINGS

The above and other aspects of the invention, its nature, and various features will become more apparent upon consideration of the following detailed description, taken in conjunction with the accompanying drawings, in which like reference characters refer to like parts throughout, and in which:

FIGS. **1** and **2** are schematic views of an illustrative electronic device in accordance with some embodiments of the invention;

FIGS. **3**A-**3**D are a flowchart of an illustrative process for processing motion sensor data using various power management modes in accordance with some embodiments of the invention; and

FIG. **4** is a flowchart of an other illustrative process for processing motion sensor data using various power management modes in accordance with some embodiments of the invention.

DETAILED DESCRIPTION OF THE DISCLOSURE

Systems, methods, and computer-readable media for processing motion sensor data using various power management modes of an electronic device are provided and described with reference to FIGS. **1**-**4**.

An electronic device may be operative to receive motion sensor data generated by a motion sensor and the motion sensor data may be used to control a function of the electronic device. For example, a user of the device may perform a certain motion event (e.g., a walking event or a shaking event) that may cause the motion sensor to detect a particular movement and thereby generate particular motion sensor data. A motion sensing application may be utilized by the device to process the generated motion sensor data. For example, a processor running a motion sensing application may analyze the motion sensor data to distinguish the specific type of motion event that caused the motion sensor to generate the motion sensor data. Then the application may determine if that specific type of motion event is associated with an instruction to control a function of the device and, if so, the application may carry out that instruction.

The electronic device may be able to operate in various power management modes in order to conserve power during certain situations. For example, an electronic device may be

configured to switch from an active power mode to a sleep power mode when certain device components have not been used and/or certain instructions have not been received within a certain period of time. Various components may be at least partially deactivated by the device when switching to the sleep mode. However, in some embodiments, a motion sensor may remain at least partially activated when the device is operating in a lower power mode, such as a sleep mode, so that certain user motion events may still be detected and appropriately utilized by the device. For example, a motion sensor may be utilized as a pedometer for continuously detecting user step motion events despite the device switching between various power management modes for conserving power.

FIG. **1** is a schematic view of an illustrative electronic device **100** for detecting a user's steps using one or more motion sensors in accordance with some embodiments of the invention. Electronic device **100** may perform a single function (e.g., a device dedicated to detecting a user's steps) and, in other embodiments, electronic device **100** may perform multiple functions (e.g., a device that detects a user's steps, plays music, and receives and transmits telephone calls). Moreover, in some embodiments, electronic device **100** may be any portable, mobile, or hand-held electronic device configured to detect a user's motions (e.g., steps) wherever the user travels. Electronic device **100** may include any suitable type of electronic device having one or more motion sensors operative to detect a user's motions. For example, electronic device **100** may include a media player (e.g., an iPod™ available by Apple Inc. of Cupertino, Calif.), a cellular telephone (e.g., an iPhone™ available by Apple Inc.), a personal e-mail or messaging device (e.g., a Blackberry™ available by Research In Motion Limited of Waterloo, Ontario), any other wireless communication device, a pocket-sized personal computer, a personal digital assistant ("PDA"), a laptop computer, a music recorder, a still camera, a movie or video camera or recorder, a radio, medical equipment, any other suitable type of electronic device, and any combinations thereof.

Electronic device **100** may include a processor or control circuitry **102**, memory **104**, communications circuitry **106**, power supply **108**, input/output ("I/O") circuitry **110**, and one or more motion sensors **112**. Electronic device **100** may also include a bus **103** that may provide a data transfer path for transferring data, to, from, or between various other components of device **100**. In some embodiments, one or more components of electronic device **100** may be combined or omitted. Moreover, electronic device **100** may include other components not combined or included in FIG. **1**. For example, electronic device **100** may also include various other types of components, including, but not limited to, light sensing circuitry, camera lens components, or global positioning circuitry, as well as several instances of one or more of the components shown in FIG. **1**. For the sake of simplicity, only one of each of the components is shown in FIG. **1**.

Electronic device **100** may also be provided with a housing **101** that may at least partially enclose one or more of the components of device **100** for protecting them from debris and other degrading forces external to device **100**. In some embodiments, all of the components of electronic device **100** may be provided within the same housing **101**. In other embodiments, one or more of the components may be provided within its own housing (e.g., a motion sensor **112** may be provided within its own housing and may communicate wirelessly or through a wire with a processor **102**, which may be provided within its own housing).

Memory **104** may include one or more storage mediums, including, for example, a hard-drive, solid-state drive, flash memory, permanent memory such as read-only memory ("ROM"), semi-permanent memory such as random access memory ("RAM"), any other suitable type of storage component, or any combination thereof. Memory **104** may include cache memory, which may be one or more different types of memory used for temporarily storing data for electronic device applications. Memory **104** may store media data (e.g., music, image, and video files), software (e.g., for implementing functions on device **100**), firmware, preference information (e.g., media playback preferences), lifestyle information (e.g., food preferences), exercise information (e.g., information obtained by exercise monitoring equipment), transaction information (e.g., information such as credit card information), wireless connection information (e.g., information that may enable device **100** to establish a wireless connection), subscription information (e.g., information that keeps track of podcasts or television shows or other media a user subscribes to), contact information (e.g., telephone numbers and e-mail addresses), calendar information, any other suitable data, or any combination thereof.

Communications circuitry **106** may be provided to allow device **100** to communicate with one or more other electronic devices or servers (not shown) using any suitable communications protocol. For example, communications circuitry **106** may support Wi-Fi (e.g., an 802.11 protocol), Ethernet, Bluetooth™, high frequency systems (e.g., 900 MHz, 2.4 GHz, and 5.6 GHz communication systems), cellular networks (e.g., GSM, AMPS, GPRS, CDMA, EV-DO, EDGE, 3GSM, DECT, IS-136/TDMA, iDen, LTE, or any other suitable cellular network or protocol), infrared, transmission control protocol/internet protocol ("TCP/IP") (e.g., any of the protocols used in each of the TCP/IP layers), hypertext transfer protocol ("HTTP"), BitTorrent™, file transfer protocol ("FTP"), real-time transport protocol ("RTP"), real-time streaming protocol ("RTSP"), secure shell protocol ("SSH"), voice over internet protocol ("VOIP"), any other communications protocol, or any combination thereof. Communications circuitry **106** may also include circuitry that can enable device **100** to be electrically coupled to another device (e.g., a computer or an accessory device) and communicate with that other device, either wirelessly or via a wired connection.

Power supply **108** can include any suitable circuitry for receiving and/or generating power, and for providing such power to one or more components of electronic device **100**. In some embodiments, power supply **108** can be coupled to a power grid (e.g., when device **100** is not acting as a portable device or when a battery of the device is being charged at an electrical outlet with power generated by an electrical power plant). As another example, power supply **108** can be configured to generate power from a natural source (e.g., solar power using solar cells). In some embodiments, power supply **108** can include one or more batteries for providing power (e.g., when device **100** is acting as a portable device). For example, power supply **108** can include one or more of a battery (e.g., a gel, nickel metal hydride, nickel cadmium, nickel hydrogen, lead acid, or lithium-ion battery), an uninterruptible or continuous power supply ("UPS" or "CPS"), and circuitry for processing power received from a power generation source (e.g., power generated by an electrical power plant and delivered to the user via an electrical socket or otherwise).

The power can be provided by power supply **108** as alternating current or direct current, and may be processed to transform power or limit received power to particular characteristics. For example, the power can be transformed to or

from direct current, and constrained to one or more values of average power, effective power, peak power, energy per pulse, voltage, current (e.g., measured in amperes), or any other characteristic of received power. Power supply **108** can be operative to request or provide particular amounts of power at different times, for example, based on the needs or requirements of electronic device **100** or periphery devices that may be coupled to electronic device **100** (e.g., to request more power when charging a battery than when the battery is already charged).

Input/output circuitry **110** may be operative to convert, and encode/decode, if necessary, analog signals and other signals into digital data. In some embodiments, I/O circuitry **110** may convert digital data into any other type of signal, and vice-versa. For example, I/O circuitry **110** may receive and convert physical contact inputs (e.g., using a multi-touch screen), physical movements (e.g., using a mouse or sensor), analog audio signals (e.g., using a microphone), or any other input. The digital data can be provided to and received from processor **102**, memory **104**, or any other component of electronic device **100**. Although I/O circuitry **110** is illustrated in FIG. **1** as a single component of electronic device **100**, several instances of I/O circuitry can be included in electronic device **100**.

Input/output circuitry **110** may include any suitable mechanism or component for allowing a user to provide inputs for interacting or interfacing with electronic device **100**. For example, an input component of I/O circuitry **110** may include any suitable user input component or mechanism and can take a variety of forms, including, but not limited to, an electronic device pad, dial, click wheel, scroll wheel, touch screen, one or more buttons (e.g., a keyboard), mouse, joy stick, track ball, and combinations thereof. In some embodiments, I/O circuitry **110** may include a multi-touch screen. Each input component of I/O circuitry **110** can be configured to provide one or more dedicated control functions for making selections or issuing commands associated with operating electronic device **100**.

Input/output circuitry **110** may also include any suitable output mechanism or component for presenting information (e.g., textual, graphical, audible, and/or tactile information) to a user of electronic device **100**. For example, I/O circuitry **110** may include any suitable output component or mechanism and can take a variety of forms, including, but not limited to, audio speakers, headphones, audio line-outs, visual displays, antennas, infrared ports, rumblers, vibrators, or combinations thereof.

In some embodiments, I/O circuitry **110** may include image display circuitry (e.g., a screen or projection system) as an output component for providing a display visible to the user. For example, the display circuitry may include a screen (e.g., a liquid crystal display ("LCD"), a light emitting diode ("LED") display, an organic light-emitting diode ("OLED") display, a surface-conduction electron-emitter display ("SED"), a carbon nanotube display, a nanocrystal display, any other suitable type of display, or combination thereof) that is incorporated in electronic device **100**. As another example, the display circuitry may include a movable display or a projecting system for providing a display of content on a surface remote from electronic device **100** (e.g., a video projector, a head-up display, or a three-dimensional (e.g., holographic) display).

In some embodiments, display circuitry of I/O circuitry **110** can include a coder/decoder ("CODEC") to convert digital media data into analog signals. For example, the display circuitry, or other appropriate circuitry within electronic device **100**, may include video CODECS, audio CODECS, or any other suitable type of CODEC. Display circuitry also can include display driver circuitry, circuitry for driving display drivers, or both. The display circuitry may be operative to display content (e.g., media playback information, application screens for applications implemented on the electronic device, information regarding ongoing communications operations, information regarding incoming communications requests, or device operation screens) under the direction of processor **102**.

It should be noted that one or more input components and one or more output components of I/O circuitry **110** may sometimes be referred to collectively herein as an I/O interface **110**. It should also be noted that an input component and an output component of I/O circuitry **110** may sometimes be a single I/O component, such as a touch screen that may receive input information through a user's touch of a display screen and that may also provide visual information to a user via that same display screen.

Motion sensor **112** may include any suitable motion sensor operative to detect movements of electronic device **100**. For example, motion sensor **112** may be operative to detect a motion event of a user carrying device **100**. In some embodiments, motion sensor **112** may include one or more three-axis acceleration motion sensors (e.g., an accelerometer) operative to detect linear acceleration in three directions (i.e., the x or left/right direction, the y or up/down direction, and the z or forward/backward direction). As another example, motion sensor **112** may include one or more single-axis or two-axis acceleration motion sensors which may be operative to detect linear acceleration only along each of the x or left/right direction and the y or up/down direction, or along any other pair of directions. In some embodiments, motion sensor **112** may include an electrostatic capacitance (e.g., capacitance-coupling) accelerometer that is based on silicon micro-machined micro electro-mechanical systems ("MEMS") technology, including a heat-based MEMS type accelerometer, a piezoelectric type accelerometer, a piezoresistance type accelerometer, or any other suitable accelerometer.

In some embodiments, motion sensor **112** may be operative to directly detect rotation, rotational movement, angular displacement, tilt, position, orientation, motion along a non-linear (e.g., arcuate) path, or any other non-linear motions. For example, if motion sensor **112** is a linear motion sensor, additional processing may be used to indirectly detect some or all of the non-linear motions. For example, by comparing the linear output of motion sensor **112** with a gravity vector (i.e., a static acceleration), motion sensor **112** may be operative to calculate the tilt of electronic device **100** with respect to the y-axis. In some embodiments, motion sensor **112** may alternatively or additionally include one or more gyro-motion sensors or gyroscopes for detecting rotational movement. For example, motion sensor **112** may include a rotating or vibrating element. Although the following discussion generally describes sensing motion in the context of a three-axis accelerometer, it will be understood that the discussion may be applied to any suitable sensing mechanism or combination of sensing mechanisms provided by motion sensor **112** of electronic device **100** for generating motion sensor data in response to detecting movement.

Processor **102** may include any processing circuitry operative to control the operations and performance of electronic device **100**. For example, processor **102** may be used to run operating system applications, firmware applications, media playback applications, media editing applications, or any other application. In some embodiments, processor **102** may receive input signals from an input component of I/O circuitry **110** and/or drive output signals through an output component

(e.g., a display) of I/O circuitry **110**. Processor **102** may load a user interface program (e.g., a program stored in memory **104** or another device or server) to determine how instructions or data received via an input component of I/O circuitry **110** or one or more motion sensors **112** may manipulate the way in which information is provided to the user via an output component of I/O circuitry **110**. Processor **102** may associate different metadata with any of the motion data captured by motion sensor **112**, including, for example, global positioning information, a time code, or any other suitable metadata (e.g., the current mode of device **100** or the types of applications being run by device **100** when the motion data was captured).

To enhance a user's experience interacting with electronic device **100**, the electronic device may provide the user with an ability to generate useful device information by moving the electronic device (i.e., a motion sensor of the electronic device) in one of various ways. For example, motion sensor **112** may detect movement caused by a particular type of user motion event (e.g., a user shaking sensor **112** or a user walking with sensor **112**), and sensor **112** may then generate a particular motion sensor data signal based on the detected movement. In some embodiments, motion sensor **112** may be a three-axis accelerometer, and the detected movement may include, for example, movement along one or more particular axes of the accelerometer caused by a particular user motion event (e.g., a tilting motion detected in a z-y plane, or a shaking motion detected along any of the accelerometer axes). Sensor **112** may then generate motion sensor data in response to the detected movement. Next, device **100** may analyze this generated motion sensor data for distinguishing a particular type of user motion event associated with the sensor data and for determining whether or not to perform a specific device operation based on the distinguished type of user motion event (e.g., using rules or settings provided by an application run by processor **102**).

There may be various types of user motion events that can be detected by motion sensor **112** for generating motion sensor data to be analyzed by device **100**. For example, user "input" motion events may be any suitable type of user motion event associated with a user attempting to actively interact with device **100**, such as a user shaking or tilting sensor **112** to navigate a menu hierarchy of an application or to control the play of a video game being provided by device **100**. Alternatively, user "step" motion events may be any suitable type of user motion event associated with a user attempting to have device **100** track his or her exercise efforts, such as a user walking or running with sensor **112** so that the amount of steps taken may be counted by device **100**. Of course, other types of user motion events detectable by motion sensor **112** may not be intended by the user (e.g., when a user unintentionally bumps the device) or may not be caused by the user at all (e.g., when an earthquake moves the device).

Electronic device **100** may use any suitable approach or algorithm for analyzing and interpreting motion sensor data generated by motion sensor **112**. Device **100** may analyze the motion sensor data to distinguish the particular type of user motion event that caused the movement detected by sensor **112** (e.g., by distinguishing between two or more different types of user motion event that may have caused the movement) and to determine whether or not to perform a specific device operation in response to the distinguished type of user motion event.

In some embodiments, processor **102** may load a motion sensing application (e.g., an application stored in memory **104** or provided to device **100** by a remote server via communications circuitry **106**). The motion sensing application may provide device **100** with rules for utilizing the motion sensor data generated by sensor **112**. For example, the rules may determine how device **100** analyzes the motion sensor data in order to distinguish the particular type of user motion event that caused the movement detected by sensor **112** (e.g., a user step event, a user input event, or perhaps an event not necessarily intended by the user (e.g., an unintentional motion)). For example, the motion sensing application may determine whether or not the particular type of user motion event that caused the movement detected by sensor **112** is associated with an intentional user input (e.g., a user step event or a user input event). Additionally or alternatively, the rules may determine how device **100** handles the distinguished type of motion event (e.g., whether or not device **100** changes a function or setting in response to detecting the distinguished type of motion event).

For example, device **100** may analyze generated motion sensor data to determine a specific user input motion event associated with the sensor data and may shuffle a media playlist, skip to a previous or next media item (e.g., song), change the volume of played back media, or perform any other suitable operation based on the determination. In some embodiments, electronic device **100** may be configured to allow a user's specific input motion event to navigate menus or access functions contextually based on currently displayed menus (e.g., on an output display component of I/O circuitry **110**) or based on otherwise known states of the device. For example, electronic device **100** may display a "Now Playing" display, navigate a cover flow display (e.g., display a different album cover), scroll through various options, pan or scan to a radio station (e.g., move across preset radio stations when in a "radio" mode), or display a next media item (e.g., scroll through images) based on the analysis of a particular motion sensor data signal generated by motion sensor **112** in response to motion sensor **112** detecting a particular movement caused by a particular user input motion event (e.g., a shaking motion event or a tilting motion event).

Device **100** may be configured to handle user step motion events differently than user input motion events. For example, device **100** may analyze the generated motion sensor data to determine a specific user step motion event associated with the sensor data, may record the step event, and may then make various "exercise" determinations based on the step event, such as the current step count of the user, the distance traveled by the user, the pace of the user, and the like. In some embodiments, electronic device **100** may then use these step event exercise determinations to perform any suitable device operation, such as playing media having a tempo similar to the detected pace of the user.

Electronic device **100** can include different power management modes for controlling and managing power consumption by the components of the device and any periphery devices that may be coupled to the device. In particular, electronic device **100** can include one or more particular power management modes for reducing power consumption when the device is not connected to a remote power supply (e.g., when the electronic device is not plugged into a wall socket). For example, a particular power management mode of device **100** can prevent non-essential power intensive processes from being performed by the device while the device is being powered by a battery. In some embodiments, electronic device **100** can refrain from providing power to particular device components after a certain period of non-use. For example, electronic device **100** can turn off a hard drive (e.g., memory **104**), dim or turn off a display (e.g., an output component of I/O circuitry **110**), or place a processor (e.g., pro-

cessor **102**) in a low-power "sleep" or "hibernate" mode. Some or all of the power management settings can be set automatically or by a user of device **100** (e.g., the user may define the duration or condition before device **100** switches between particular power management modes).

For example, as shown in FIG. **2**, power supply component **108** of device **100** may include a power management unit ("PMU") **118** coupled to at least one source of power, such as battery **120** via PMU-battery power line **119**. In some embodiments, PMU **118** may include a microcontroller and can be configured to govern the power functions of device **100**. PMU **118** may include its own memory (e.g., loaded with software and/or firmware), processor with input/output functionality and timers, as well as one or more converters for measuring the power provided by battery **120**. In some embodiments, PMU **118** may also include a backup power source that can power components of PMU **118** even when device **100** is completely shut down, such that, for example, the current time of a real-time clock is maintained. PMU **118** may be responsible for coordinating certain functions of device **100**, including, but not limited to, monitoring power connections and battery charges, controlling power provided to other components of the device, shutting down certain components of the device when they are left idle or deemed to be currently unnecessary to properly operate the device, regulating a real-time clock of the device, and controlling various power management modes of the device.

As mentioned, PMU **118** may provide power and communicate other information to various components of device **100**. For example, as shown in FIG. **2**, PMU **118** may be able to provide power to processor **102** via a PMU-processor power line **131**, to memory **104** via a PMU-memory power line **133**, to I/O circuitry **110** via a PMU-I/O power line **135**, and to motion sensor **112** via a PMU-sensor power line **137**. PMU **118** may also exchange information with various components, such as with processor **102** via a PMU-processor data line **141**, with memory **104** via a PMU-processor data line **143**, with I/O circuitry **110** via a PMU-I/O data line **145**, and with motion sensor **112** via a PMU-sensor data line **147**, for example. Similarly, data may be exchanged between processor **102** and memory **104** via a processor-memory data line **151**, between processor **102** and I/O circuitry **110** via a processor-I/O data line **153**, and between processor **102** and motion sensor **112** via a processor-sensor data line **155**. In some embodiments, certain power lines and data lines may be combined into a single communications line.

FIGS. **3**(A-D) show a flowchart of an illustrative process **300** for utilizing motion sensor data in various power management modes to reduce the amount of power required by an electronic device. Process **300** may include two or more power management modes, each of which may be employed by an electronic device in certain situations. For example, as shown in FIG. **3**, process **300** may provide for a device to operate in one of four different power management modes (e.g., a high active power mode at steps **302-310** of FIG. **3**A, a low active power mode at steps **312-324** of FIG. **3**B, a sleep power mode at steps **326-334** of FIG. **3**C, and a hibernate power mode at steps **336-340** of FIG. **3**D), although in other embodiments there may be more or fewer power management modes.

Process **300** is described with reference to the various device components of electronic device **100** of FIGS. **1** and **2**, although any other suitable electronic device may operate according to the power mode management of process **300**. Moreover, process **300** is often described with specific reference to a motion sensing application that may or may not require utilization of a display output component of I/O circuitry **110** of device **100**, although process **300** may be followed by a device running any suitable application that may or may not use any suitable device component.

Because device **100** may be constantly switching between various power modes, process **300** may not have a distinct beginning and ending (e.g., device **100** may always be switching between power modes, may not always begin in the same mode, and may be turned off when in any of the modes). However, device **100** may begin in a high active mode (e.g., at step **302**) when first turned on. For example, at step **302**, an electronic device may be operating in a first power management mode, such as a high active power mode. In some embodiments, electronic device **100** may be operating in a high active power mode when power is being provided to some or all of the components of device **100**. For example, with respect to FIG. **2**, device **100** may be operating in a high active power mode when PMU **118** is providing power (e.g., from battery **120**) to processor **102**, memory **104**, I/O circuitry **110**, and motion sensor **112** via respective power lines **131**, **133**, **135**, and **137**.

While device **100** is operating in the high active power mode, one or more applications may be run by processor **102**, such as an application loaded into processor **102** from memory **104** via data line **151**. As mentioned, processor **102** may include any processing circuitry operative to control the operations and performance of electronic device **100**. For example, processor **102** may be used to run operating system applications, firmware applications, media playback applications, media editing applications, or any other application. In some embodiments, processor **102** may receive input signals from an input component (e.g., a scroll wheel or touch screen) of I/O circuitry **110** and/or drive output signals through an output component (e.g., a display) of I/O circuitry **110**. Processor **102** may load a user interface program (e.g., a program stored in memory **104** or another device or server) to determine how instructions or data received via an input component of I/O circuitry **110** or one or more motion sensors **112** may manipulate the way in which information is provided to the user via an output component of I/O circuitry **110**.

For example, with respect to embodiments involving the use of motion sensor data generated by motion sensor **112**, a motion sensing application (e.g., an application stored in memory **104** or provided to device **100** by a remote server via communications circuitry **106**) may be run by processor **102** while device **100** operates in the high active power mode. The motion sensing application may provide device **100** with rules for processing the motion sensor data generated by sensor **112**. For example, the rules may determine how device **100** analyzes the motion sensor data in order to distinguish the particular type of user motion event that caused the movement detected by sensor **112** (e.g., a user step event, a user input event, or perhaps an event not necessarily intended by the user (e.g., an unintentional motion event)). Additionally or alternatively, the rules may determine how device **100** handles the distinguished type of motion event (e.g., whether or not device **100** changes a function or setting of the device in response to detecting the distinguished type of motion event, such as updating a display screen presented to the user or updating the count of user steps detected). Therefore, at step **302**, an application (e.g., a motion sensing application) may be run by processor **102** and processor **102** may analyze application inputs and determine appropriate application outputs.

For example, when in the high active power mode at step **302**, processor **102** may be loaded with a motion sensing application and may receive application inputs, such as motion sensor data from sensor **112** via data line **155**. Pro-

cessor **102** may use the motion sensing application to analyze the motion sensor data in order to distinguish the particular type of user motion event that caused the movement detected by sensor **112**. Then processor **102** may use the motion sensing application to determine how device **100** should handle the distinguished type of motion event. For example, processor **102** may distinguish from the motion sensor data a specific user input event (e.g., a tilting event), and processor **102** may also determine that the specific user input event requires that device **100** display a particular menu screen. Therefore, processor **102** may generate the particular menu screen, for example, in conjunction with data provided by memory **104** via data line **151**, and may then send that menu screen data to a display screen output component of I/O circuitry **110** (e.g., display output component **111** of FIG. **2**) via data line **153** for display to the user.

It is to be understood that various other types of applications may also be run by processor **102** during the high active power mode and utilized at step **302**. For example, user inputs generated by an input component of I/O circuitry **110** (e.g., keyboard input component **109** of FIG. **2**) may also be received by processor **102** and used to dictate certain device responses. For example, when operating in the high active power mode or any of the other power modes of process **300**, specific user inputs may be received that may instruct or require device **100** to switch to any other power management mode. For example, at any suitable point during process **300**, device **100** may receive a user input associated with a user instruction to enter a sleep mode.

At certain points, however, device **100** may switch from the first power management mode (e.g., the high active power mode of step **302**) to another type of power management mode. For example, it may be determined that one or more certain components of device **100** are not currently being utilized by the type or types of applications being run by processor **102**. In some embodiments, it may be determined that processor **102** is running an application that does not currently require the use of display output component **111** of I/O circuitry **110**. Therefore, device **100** may stop providing power to display output component **111**, or may otherwise at least partially deactivate that output component, until it is determined that the output component may once again be required by processor **102**.

Keeping with the specific example of a motion sensing application being used by processor **104**, in order to determine whether or not a component (e.g., a display output component **111**) is not currently required, process **300** may advance to step **304**. At step **304**, device **100** may determine whether or not motion sensor data has recently been distinguished by processor **102** as a motion event requiring use of display **111**. For example, at step **304**, it may be determined whether or not received motion sensor data that requires display **111** has been processed within the past duration of time "X" (e.g., whether or not display **111** has been altered based on received motion sensor data at any point within the last 5 minutes or any other suitable duration of time). The duration of time X may be any suitable duration of time for which the non-use of display **111**, or any other suitable component, by the motion sensing application may trigger device **100** to exit its current power management mode (e.g., its high active power mode). If it is determined at step **304** that display **111** has been utilized by the motion sensing application of processor **102** within the past duration of time X, process **300** may return from step **304** back to the normal operation of device **100** within the high active power mode at step **302**.

However, if it is determined at step **304** that display **111** has not been utilized by the motion sensing application of processor **102** within the past duration of time X, process **300** may proceed from step **304** to step **306**. At step **306**, it may be determined whether or not any motion sensor data has been processed by the motion sensing application of processor **102** within the past duration of time "Y". The duration of time Y may be any suitable duration of time for which the non-use of processor **102** for analyzing motion sensor data from sensor **112** may trigger device **100** to enter a particular new power management mode. Time Y may be less than, equal to, or greater than time X. Both time X and time Y may be defined by the motion sensing application, by other programs or components of device **100**, by the user of device **100**, or by any other suitable mechanism.

If it is determined at step **306** that processor **102** has analyzed certain motion sensor data within the past duration of time Y, process **300** may proceed to step **308**, where device **100** may prepare to enter a second power management mode (e.g., a low active power mode). However, if it is determined at step **306** that processor **102** has not analyzed any motion sensor data within the past duration of time Y, process **300** may proceed to step **310**, where device **100** may prepare to enter a third power management mode (e.g., a sleep power mode).

First, if process **300** proceeds from step **306** to step **308**, processor **102** and a motion sensing application may still be actively processing motion sensor data (e.g., at least with respect to a cut-off frequency based on time Y), but may not be actively processing motion sensor data utilized for manipulating display **111** (e.g., at least with respect to a cut-off frequency based on time X). Therefore, at step **308**, device **100** may prepare to enter a second power management mode (e.g., a low active power mode) by stopping to provide power to display **111** or by otherwise at least partially deactivating display **111** in order to reduce the power requirements of device **100**. For example, PMU **118** may stop providing power to at least portions of display **111** via power line **135**. Alternatively or additionally, processor **102** and/or PMU **118** may stop providing data to at least portions of display **111** via respective data lines **153** and **145**. Process **300** may then proceed to step **312** of FIG. **3**B, and the motion sensing application may continue to be run by processor **102** while device **100** operates in a low active power mode with display **111** at least partially deactivated.

Alternatively, if process **300** proceeds from step **306** to step **310**, processor **102** and a motion sensing application may not be actively processing motion sensor data (e.g., at least with respect to a cut-off frequency based on time Y), and thus may not be actively processing motion sensor data utilized for manipulating display **111** or any other component of device **100**. Therefore, at step **310**, device **100** may prepare to enter a third power management mode (e.g., a sleep power mode) in order to reduce the power requirements of device **100** by stopping to provide power to at least a portion of display **111** or by otherwise at least partially deactivating display **111**, as well as by at least partially deactivating some or all of the other components that may be active due to the motion sensing application. For example, at step **310**, device **100** may prepare to enter the sleep power management mode by unloading the motion sensor application from processor **102** (e.g., via data line **151** back into memory **104**), and by at least partially deactivating or powering down processor **102** and/or memory **104**. PMU **118** may stop providing power to at least portions of processor **102** and/or memory **104** via respective power lines **131** and **133**. Alternatively or additionally, PMU **118** may stop providing data to at least portions of processor **102** and/or memory **104** via respective data lines **141** and **143**.

Process **300** may then proceed to step **326** of FIG. **3**C, and device **100** may operate in the sleep power mode.

Continuing now with device **100** operating in a low active power mode at step **312**, processor **102** may be running the motion sensing application and may receive application inputs, such as motion sensor data from sensor **112** via data line **155**. Step **312** may be similar to step **302** of FIG. **3**A, but one or more components may be at least partially deactivated for reducing the power requirements of device **100** (e.g., display **111**, as described with respect to step **308**). At step **314**, device **100** may determine whether or not new motion sensor data has been received by processor **102**. If new motion sensor data has been received, process **300** may advance to step **316** and processor **102** may use the motion sensing application to analyze the motion sensor data in order to distinguish the particular type of user motion event that caused the movement detected by sensor **112**. Processor **102** may then use the motion sensing application to determine how device **100** should handle the distinguished type of motion event and advance to step **318**.

At step **318**, device **100** may determine whether or not processor **102** has distinguished from the received motion sensor data (e.g., at step **316**) a user motion event that requires utilization of one or more device components that are not appropriately activated in the current power management mode (i.e., the low active power mode). For example, device **100** may determine at step **318** whether or not processor **102** has distinguished a user motion event that requires utilization of display **111**, such as a user motion event that is determined to require device **100** to display a particular menu screen on display **111**. If it is determined at step **318** that processor **102** has distinguished from the new motion sensor data a user motion event that requires display **111**, process **300** may proceed to step **320** and device **100** may prepare to enter first power management mode (e.g., high active power mode). However, if it is determined at step **318** that the motion event distinguished by processor **102** does not require display **111**, process **300** may return to step **312** and device **100** may respond to the distinguished motion event while the device remains in its low active power mode.

First, if process **300** proceeds from step **318** to step **320**, a motion sensing application and processor **102** may be actively distinguishing user motion events from received motion sensor data, but one or more particular device components required to respond to a certain distinguished user motion event (e.g., display **111**) may not be properly activated. Therefore, at step **320**, device **100** may prepare to enter the first power management mode (e.g., the high active power mode) by starting to provide power to display **111** or by otherwise at least partially activating display **111** in order to allow the motion sensing application to properly process the distinguished user motion event requiring utilization of display **111**. For example, PMU **118** may begin providing power to at least portions of display **111** via power line **135**. Alternatively or additionally, processor **102** and/or PMU **118** may start providing data to at least portions of display **111** via respective data lines **153** and **145**. Process **300** may then proceed to step **302** of FIG. **3**A, and the motion sensing application may continue to be run by processor **102** while device **100** operates in the high active power mode with display **111** activated for proper use by the motion sensing application.

Alternatively, if process **300** returns from step **318** to step **312**, the motion sensing application and processor **102** may be actively distinguishing user motion events from received motion sensor data, but the one or more particular device components required to respond to the recently distinguished user motion event may already be appropriately activated in the current power management mode (i.e., the low active power mode). For example, device **100** may determine at step **318** that the recently distinguished user motion event does not require utilization of display **111**, such as a user step motion event that may be determined by the motion sensing application only to require device **100** to update a counter indicative of the number of user steps that have been detected. Therefore, at step **312**, the motion sensing application may continue to be run by processor **102** while device **100** remains operating in the low active power mode.

It is to be reiterated that process **300** is presented to describe specific embodiments for utilizing multiple power management modes with respect to a motion sensing application that may or may not utilize display **111**. However, it is to be understood that process **300** may alternatively be followed for various other types of applications that may or may not use various other types of device components. Moreover, a motion sensing application may or may not use various other types of device components in addition to or as opposed to display **111**. For example, various other components may be deactivated for entering the low active power mode at step **308** and it may be determined whether or not one or more of these other deactivated components are utilized by the distinguished motion event at step **318** and need to be reactivated at step **320**. However, the specific embodiments relating to a motion sensing application and the optional use of display **111** are referenced only to more clearly describe the features of process **300**.

However, if at step **314** it is determined that new motion sensor data has not been received by processor **102**, process **300** may advance to step **322**. At step **322**, it may be determined whether or not any motion sensor data has been processed by the motion sensing application of processor **102** within the past duration of time "Z". The duration of time Z may be any suitable duration of time for which the non-use of processor **102** for analyzing motion sensor data from sensor **112** may trigger device **100** to enter a particular new power management mode. Time Z may be less than, equal to, or greater than time X of step **304** and/or time Y of step **306**. Like time X and time Y, time Z may be defined by the motion sensing application, by other programs or components of device **100**, by the user of device **100**, or by any other suitable mechanism. If it is determined at step **322** that processor **102** has analyzed motion sensor data within the past duration of time Z, process **300** may return to step **312**, where the motion sensing application may continue to be run by processor **102** while device **100** remains operating in the low active power mode.

However, if it is determined at step **322** that processor **102** has not analyzed any motion sensor data within the past duration of time Z, process **300** may proceed to step **324**, where device **100** may prepare to enter a third power management mode (e.g., a sleep power mode or a standby power mode). For example, if process **300** proceeds from step **322** to step **324**, processor **102** and a motion sensing application may not be actively processing motion sensor data (e.g., at least with respect to a cut-off frequency based on time Z), and thus may not still be actively processing motion sensor data utilized for manipulating display **111** or any other component of device **100**. Therefore, at step **324**, device **100** may prepare to enter the sleep power mode in order to reduce the power requirements of device **100** by at least partially deactivating some or all of the other components that may be active due to the motion sensing application. For example, at step **324**, device **100** may prepare to enter the sleep power management mode by unloading the motion sensor application from pro-

cessor **102** (e.g., via data line **151** back into memory **104**), and by at least partially deactivating or powering down processor **102** and/or memory **104**. PMU **118** may stop providing power to at least portions of processor **102** and/or memory **104** via respective power lines **131** and **133**. Alternatively or additionally, PMU **118** may stop providing data to at least portions of processor **102** and/or memory **104** via respective data lines **141** and **143**. Process **300** may then proceed to step **326** of FIG. **3**C, and device **100** may operate in the sleep power mode.

Continuing now with device **100** operating in a sleep power mode at step **326**, processor **102** may not be running a motion sensing application and at least portions of processor **102** may be deactivated. The sleep power mode may be a power mode that requires less, and often significantly less, power than the low active power mode. The sleep mode may save significant electrical consumption as compared to leaving many or all of the device components fully powered and idle, but may also allow the user to avoid having to reset programming codes or wait for the device to completely reboot. When operating in the sleep mode, device **100** may discontinue power to most of the device components (e.g., using PMU **118**). However, certain components may still be activated in sleep mode, such as a RAM component of memory **104** that may be used to restore device **100** to its previous configuration once the sleep mode is exited. At least portions of PMU **118** may also remain activated during the sleep power mode such that device **100** may properly wake up from the sleep mode in response to certain events (e.g., a user input via input component **109** of I/O circuitry **110**).

In some embodiments, one or more additional components may also remain activated during the sleep power mode. For example, at least portions of motion sensor **112** may remain active during the sleep power mode such that certain user motion events may be detected. PMU **118** may provide power to at least a portion of motion sensor **112** via power line **137**. Alternatively or additionally, motion sensor **112** may be provided with its own independent source of power **113** (i.e., not battery **120** via PMU **118**) that may allow at least portions of sensor **112** to remain activated during the sleep power mode or any other power management mode of device **100**.

Process **300** may proceed to step **328** when device **100** is operating in the sleep power mode. At step **328**, it may be determined whether or not motion sensor **112** has recently detected a motion event of a magnitude that exceeds a certain motion magnitude threshold "T". The magnitude of threshold T may be any suitable magnitude threshold above which the detected motion event may generate motion sensor data to be analyzed by a motion sensing application for potential device operation and thus may trigger device **100** to enter a particular new power management mode. Threshold T may be defined by motion sensor **112**, by a motion sensing application, by other programs or components of device **100**, by the user of device **100**, or by any other suitable mechanism. Threshold T may be set to avoid processing minor incidental movements of motion sensor **112** but such that other types of movement of motion sensor **112** may be detected when device **100** is in the sleep mode and then properly analyzed.

If it is determined at step **328** that motion sensor **112** has recently detected a motion event of a magnitude that exceeds threshold T, process **300** may advance to step **330**. Therefore, at step **330**, device **100** may prepare to enter the second power management mode (e.g., the low active power mode) for analyzing with a motion sensing application the motion sensor data generated in response to the recently detected motion event. For example, motion sensor **112** may send a signal to PMU **118** (e.g., via power line **137** and/or data line **147**) that may prompt PMU **118** to allow a proper motion sensing application to be loaded by device **100**. For example, PMU **118** may provide data and/or power to at least portions of processor **102** via respective lines **131** and **141** and/or to at least portions of memory **104** via respective lines **133**/**143** in order for a proper motion sensing application to be loaded into processor **102**. Moreover, a portion of memory **104** (e.g., a RAM component of memory **104** as described with respect to step **324**) may be utilized to restore device **100** to its previous configuration before the sleep mode had been entered. Process **300** may then proceed to step **312** of FIG. **3**B, where device **100** operates in the low active power mode and the motion sensing application may be run by processor **102** for analyzing (e.g., at step **316**) the motion sensor data generated by motion sensor **112** in response to the motion event recently detected at step **328**. In some embodiments, if this recently detected motion event is analyzed at step **316** to be an event not associated with an intentional user input, process **300** may return device **100** directly to the sleep mode.

However, if at step **328** it is determined that motion sensor **112** has not recently detected a motion event of a magnitude that exceeds threshold T, process **300** may advance to step **332**. At step **332**, it may be determined whether or not device **100** has been operating in the sleep mode for a duration of time "S". The duration of time S may be any suitable duration of time for which the non-detection of a motion event of a magnitude exceeding threshold T may trigger device **100** to enter a particular new power management mode, for example. Time S may be less than, equal to, or greater than time X of step **304**, time Y of step **306**, and/or time Z of step **322**. Like times X, Y, and Z, time S may be defined by motion sensor **112**, by a motion sensing application, by other programs or components of device **100**, by the user of device **100**, or by any other suitable mechanism. If it is determined at step **332** that device **100** has not yet been operating in the sleep mode for the duration of time S, process **300** may return to step **326** and device **100** may remain in the sleep mode.

However, if it is determined at step **332** that device **100** has been operating in the sleep mode for the duration of time S, process **300** may proceed to step **334**, where device **100** may prepare to enter a fourth power management mode (e.g., a hibernate power mode). For example, if process **300** proceeds from step **332** to step **334**, motion sensor **112** may not be actively detecting motion events of a magnitude that exceed threshold T (e.g., at least with respect to a cut-off frequency based on time S), and thus may be considered inactive with respect to the sleep power mode. Therefore, at step **334**, device **100** may prepare to enter the hibernate power mode in order to reduce the power requirements of device **100** even more by deactivating some or all of the device components that may still be at least partially activated in the sleep power mode. For example, PMU **118** may stop providing power to a RAM component of memory **104** that may have been used to restore device **100** to its previous configuration once the sleep mode is exited (e.g., as described with respect to step **324** and step **330**). However, before that is done, at least portions of the contents of the RAM may be written to a non-volatile storage portion of memory **104** as a file or a separate partition such that device **100** may properly be restored from the hibernate mode in response to certain events (e.g., a user input via input component **109** of I/O circuitry **110**). Process **300** may then proceed to step **336** of FIG. **3**D, and device **100** may operate in the hibernate power mode.

Continuing now with device **100** operating in a hibernate power mode at step **336**, PMU **118** may not be activating at least a portion of RAM, for example, and the hibernate power mode may be a power mode that requires even less power than

the sleep power mode. In some embodiments, at least a portion of PMU **118** may remain activated during the hibernate power mode such that device **100** may properly wake up from the hibernate mode in response to certain events (e.g., a user input via input component **109** of I/O circuitry **110**).

In some embodiments, one or more additional components may also remain activated during the hibernate power mode. For example, at least portions of motion sensor **112** may remain active during the hibernate power mode such that certain user motion events may still be detected. PMU **118** may provide power to at least a portion of motion sensor **112** via power line **137**. Alternatively or additionally, motion sensor **112** may be provided with its own independent source of power **113** (i.e., not battery **120** via PMU **118**) that may allow at least portions of sensor **112** to remain activated during the hibernate power mode or any other power management mode of device **100**.

Process **300** may proceed to step **338** when device **100** is operating in the hibernate power mode. At step **338**, it may be determined whether or not motion sensor **112** has recently detected a motion event of a magnitude that exceeds a certain motion magnitude threshold "M". In some embodiments, motion sensor **112** and PMU **118** may be the only components of device **100** that are not completely deactivated in the hibernate power mode (e.g., processor **102** may be completely deactivated and no software applications may be running in the hibernate power mode). Therefore, only sensor **112** itself may be able to determine whether or not it has detected a motion event of a magnitude that exceeds threshold M. Moreover, in some embodiments, motion sensor **112** may only be provided with enough power in hibernate power mode to detect motion events of a magnitude that exceeds threshold M, but not enough power to correctly log all the motion parameters detected, for example. Therefore, in response to detecting a motion event of a magnitude that exceeds threshold M, motion sensor **112** may generate a "wake up" signal and transmit such a signal to PMU **118** (e.g., via line **137** and/or line **147**). In response to receiving such a signal, PMU **118** may wake up other portions of device **100** to analyze motion sensor data generated in response to the motion event that woke up the PMU unit.

The magnitude of threshold M may be any suitable magnitude threshold above which motion events may be detected and thus may trigger device **100** to enter a particular new power management mode (e.g., by triggering motion sensor **112** to generate and transmit a wake up signal to PMU **118**). Threshold M may be less than, equal to, or greater than threshold T of step **328**, and threshold M may be defined by motion sensor **112**, by a motion sensing application, by other programs or components of device **100**, by the user of device **100**, or by any other suitable mechanism. Threshold M may be set to avoid processing minor incidental movements of motion sensor **112** but such that other types of movement of motion sensor **112** may be detected when device **100** is in the hibernate mode and then properly analyzed.

If it is determined at step **338** that motion sensor **112** has recently detected a motion event of a magnitude that exceeds threshold M (e.g., if motion sensor **112** has generated and transmitted a wake up signal to PMU **118**), process **300** may advance to step **340**. Therefore, at step **340**, device **100** may prepare to enter the second power management mode (e.g., the low active power mode) for analyzing with a motion sensing application the motion sensor data generated in response to the recently detected motion event. For example, motion sensor **112** may send a wake up signal to PMU **118** (e.g., via power line **137** and/or data line **147**) that may prompt PMU **118** to allow a proper motion sensing application to be loaded by device **100**. In response to receiving such a wake up signal, for example, PMU **118** may provide data and/or power to at least portions of processor **102** via respective lines **131** and **141** and/or to at least portions of memory **104** via respective lines **133**/**143** in order for a proper motion sensing application to be loaded into processor **102**.

Moreover, a portion of memory **104** (e.g., a file or a separate partition of a non-volatile storage portion of memory **104** as described with respect to step **334**) may be utilized to restore device **100** to its previous configuration before the hibernate mode had been entered. Process **300** may then proceed to step **312** of FIG. **3**B, where device **100** operates in the low active power mode and the motion sensing application may be run by processor **102** for analyzing (e.g., at step **316**) the motion sensor data generated by motion sensor **112** in response to the motion event recently detected at step **338**. In some embodiments, if this recently detected motion event is analyzed at step **316** to be an event not associated with an intentional user input, process **300** may return device **100** directly to the hibernate mode.

However, if at step **338** it is determined that motion sensor **112** has not recently detected a motion event of a magnitude that exceeds threshold M, process **300** may return to step **336** and device **100** may remain in the hibernate mode.

It is understood that the steps shown in process **300** of FIGS. **3**A-**3**D are merely illustrative and that existing steps may be modified or omitted, additional steps may be added, and the order of certain steps may be altered.

As mentioned, when switching to the low active power mode either from the sleep power mode (e.g., at step **330**) or from the hibernate power mode (e.g., at step **340**), motion sensor **112** may send a signal to PMU **118** that may prompt PMU **118** to allow a proper motion sensing application to be loaded by device **100**. For example, PMU **118** may provide data and/or power to at least portions of processor **102** and/or to at least portions of memory **104** in order for a proper motion sensing application to be loaded into processor **102**. In some embodiments, when a motion sensing application or various other types of applications are loaded and run by processor **102**, the application may provide device **100** with rules for initially or automatically or otherwise activating one or more device components. For example, when a motion sensing application is initially loaded into processor **102**, the motion sensing application may be configured to instruct device **100** to activate display output component **111** of I/O circuitry **110**.

However, in order for device **100** to operate in the low power mode, in accordance with some embodiments, display **111** should remain at least partially deactivated. Therefore, when switching to the low active power mode either from the sleep power mode (e.g., at step **330**) or from the hibernate power mode (e.g., at step **340**), motion sensor **112** may send a signal to PMU **118** (e.g., via power line **137** and/or data line **147**) that may prompt PMU **118** to allow a proper motion sensing application to be loaded by device **100** while also providing motion sensing application with information for maintaining at least a portion of display **111** deactivated. For example, when switching to the low active power mode either from the sleep power mode or from the hibernate power mode, motion sensor **112** may send a flag signal to PMU **118** that may set a flag in a flag register of PMU **118** (e.g., flag register **117** of PMU **118** of FIG. **2**). This flag signal may also prompt PMU **118** to allow the proper motion sensing application to be loaded by device **100**. Alternatively, this flag signal may be a different signal than a signal sent by motion sensor **112** for prompting PMU **118** to allow the proper motion sensing application to be loaded by device **100**. Flag

register **117** may be any suitable type of register provided by PMU **118**, such as a scratch register.

Once PMU **118** is prompted to direct the motion sensing application to be loaded, processor **102** may detect the status of flag register **117** of PMU **118** (e.g., via line **131** and/or line **141**) and may determine whether or not to selectively ignore a rule of the motion sensing application instructing processor **102** to activate display **111**. Moreover, when switching from the low active power mode either to the high active power mode (e.g., at step **320**) or to the sleep power mode (e.g., at step **324**), flag register **117** may be cleared. Therefore, when switching to the low active power mode, motion sensor **112** may provide device **100** with the ability to selectively ignore certain instructions of a motion sensing application loaded into processor **102** in order to maintain certain components at least partially deactivated in the low power management mode.

In some embodiments, a process for utilizing motion sensor data in various power management modes may avoid operating in an active power mode for processing all usable motion sensor data. For example, once a particular motion event or set of motion events is distinguished by a motion sensing application at a consistent rate for a particular period of time, a device may enter an inactive power mode (e.g., a sleep or hibernate mode) and may only enter an active power mode (e.g., a high active power mode or a low active power mode) to analyze motion sensor data during certain intervals of time. If a motion sensing application has detected user step motion events that consistently indicate that a user is walking at a particular rate (e.g., 60 steps per minute), the device may stop analyzing all generated motion sensor data and may enter an inactive power mode. The device may then re-enter an active power mode at particular intervals (e.g., for 15 seconds every minute) to analyze the motion sensor data generated during that interval. If the sensor data analyzed during that interval also indicates that the user is walking at the same particular rate (e.g., if 15 steps are detected during that 15 second interval), the motion sensor application may proceed as if it had analyzed sensor data for the entire minute and may act accordingly. For example, device **100** may record that the user has taken 60 steps in the past minute, even though the motion sensing application may have only detected the 15 steps taken during the last 15 seconds of that minute. This may allow the device to operate in an active mode for only 15 seconds out of a minute and in an inactive mode for 45 seconds out of the minute, while recording or otherwise operating in response to motion events that may occur during the entire minute.

FIG. **4** shows a flowchart of an illustrative process **400** for utilizing motion sensor data in various power management modes to reduce the amount of power required by an electronic device based on consistent detection of a particular motion event. Process **400** may include two or more power management modes, each of which may be employed by an electronic device in certain situations. For example, as shown in FIG. **4**, process **400** may provide for a device to operate in one of two different power management modes (e.g., an active power mode (e.g., at steps **402-406** and **412-416**) and an inactive power mode (e.g., at steps **408** and **410**) of FIG. **4**, although in other embodiments there may be more or fewer power management modes.

Process **400** is described with reference to the various device components of electronic device **100** of FIGS. **1** and **2**, although any other suitable electronic device may operate according to the power mode management of process **400**. Moreover, process **400** is often described with specific reference to a motion sensing application that may detect user stepping motion events, although process **400** may be followed by a device running any suitable application for detecting any suitable motion event.

Because device **100** may be constantly switching between various power modes, process **400** may not have a distinct beginning and ending (e.g., device **100** may always be switching between power modes, may not always begin in the same mode, and may be turned off when in any of the modes). However, device **100** may begin in an active mode (e.g., at step **402**) when first turned on. For example, at step **402**, an electronic device may be operating in a first power management mode, such as an active power mode. The active power mode of process **400** may be similar to both the high active power mode and the low active power mode of process **300**. For example, with respect to embodiments involving the use of motion sensor data generated by motion sensor **112**, a motion sensing application (e.g., an application stored in memory **104** or provided to device **100** by a remote server via communications circuitry **106**) may be run by processor **102** while device **100** operates in the active power mode of process **400**. Certain device components may be at least partially deactivated in the active power mode of process **400** (e.g., as display **111** may be at least partially deactivated in the low active power mode of process **300**).

At certain points, however, device **100** may switch from the active power mode to another type of power management mode. For example, it may be determined that the motion sensor data processed during a certain interval of time has provided the same user motion events at a consistent rate. For example, it may be determined from the processed motion sensor data that a user has been taking steps at a consistent rate for a certain period of time. Therefore, the device may be wasting power resources by constantly analyzing motion sensor data that has become consistent and predictable.

Keeping with the specific example of a motion sensing application being used by processor **104**, in order to determine whether or not the processed motion sensor data is providing consistent results, process **400** may advance to step **404**. At step **404**, device **100** may determine whether or not the processed motion sensor data has provided consistent detection of a certain motion event or a certain set of motion events "E" occurring at a rate "R" for at least a particular duration of time "D". The duration of time D may be any suitable duration of time during which detection of a certain motion event E at a consistent rate R may trigger device **100** to exit its current power management mode (e.g., its active power mode). Similarly, the rate "R" may be any suitable rate at which consistent detection of a certain motion event E over a duration of time D may trigger device **100** to exit its current active power management mode.

Both rate R and time D may be defined by the motion sensing application, by other programs or components of device **100**, by the user of device **100**, or by any other suitable mechanism. The motion event or set of motion events E may be any suitable motion event, such as a stepping motion event or set of stepping motion events (e.g., a left foot lifting motion event and a right foot landing motion event). If it is determined at step **404** that the processed motion sensor data has not provided consistent detection of motion events E occurring at a rate R for at least a particular duration of time D, process **400** may return from step **404** back to the normal operation of device **100** within the active power mode at step **402**.

However, if it is determined at step **404** that the processed motion sensor data has provided consistent detection of motion events E occurring at a rate R for at least a particular duration of time D, process **400** may proceed from step **404** to

step **406**. At step **406**, device **100** may prepare to enter a second power management mode (e.g., an inactive power mode). The inactive power mode of process **400** may be similar to the sleep mode or the hibernate mode of process **300**. Device **100** may prepare to enter the inactive power mode at step **406** of process **400** in order to reduce the power requirements of device **100** by at least partially deactivating some or all of the device components that may be active due to the motion sensing application in the active power mode. For example, at step **406**, device **100** may prepare to enter the inactive power management mode by unloading the motion sensor application from processor **102** (e.g., via data line **151** back into memory **104**), and by at least partially deactivating or powering down processor **102** and/or memory **104**. PMU **118** may stop providing power to at least portions of processor **102** and/or memory **104** via respective power lines **131** and **133**. Alternatively or additionally, PMU **118** may stop providing data to at least portions of processor **102** and/or memory **104** via respective data lines **141** and **143**. Process **400** may then proceed to step **408**, and device **100** may operate in the inactive power mode.

At step **408**, device **100** may operate in the inactive power mode for a duration of time "F". Then, process **400** may proceed to step **410** where device **100** may prepare to reenter the active power mode for continuing to analyze with a motion sensing application the motion sensor data being generated by motion sensor **112**. For example, PMU **118** may allow a proper motion sensing application to be loaded by device **100** at step **410**. For example, PMU **118** may provide data and/or power to at least portions of processor **102** via respective lines **131** and **141** and/or to at least portions of memory **104** via respective lines **133**/**143** in order for a proper motion sensing application to be loaded into processor **102**. Process **400** may then proceed to step **412**, where device **100** may operate in the active power mode for a duration of time "N" and the motion sensing application may be run by processor **102** for processing the motion sensor data generated by motion sensor **112**.

Process **400** may then proceed from step **412** to step **414**. At step **414**, device **100** may determine whether or not the motion sensor data processed during the past duration of time N has provided consistent detection of the motion events E occurring at the rate R (i.e., the same motion events E and the same rate R as described with respect to step **404**). The duration of time N may be at least equal to any suitable duration of time during which a determination of consistent detection of motion events E at rate R may be made. If it is determined at step **414** that the processed motion sensor data has not provided consistent detection of motion events E occurring at rate R during the past duration of time N, process **400** may return back to the normal operation of device **100** within the active power mode at step **402**. This may occur if motion events E are detected to occur at a rate not substantially similar to R or if other types of motion events not substantially similar to events E are detected.

However, if it is determined at step **414** that the motion sensor data processed during the past duration of time N has provided consistent detection of motion events E occurring at rate R, process **400** may proceed from step **414** to step **416**. At step **416**, device **100** may not only respond to each one of the number of motion events E detected during time N at rate R, but device **100** may also respond to the number of motion events E assumed to have occurred at rate R during time F (i.e., the duration of time that device **100** operated in the inactive power mode at step **408**). For example, the number of motion events E detected during time N may equal the product of time N and rate R, and the number of motion events E assumed to have occurred at rate R during time F may equal the product of time F and rate R.

For example, if **15** user stepping events E were detected during a time N equal to 15 seconds (i.e., such that rate R equals one step per second), and time F equals 45 seconds, the number of motion events E assumed to have occurred at rate R during time F would be 45 (i.e., the product of 45 seconds and the rate of 1 step per second). Therefore, device **100** may operate at step **416** as if 60 user stepping events E were detected during the previous 60 seconds (i.e., the duration of time equal to N+F, which may be the duration of time for process **400** to advance from step **406** to step **414**). In some embodiments, the motion sensing application may be configured to direct device **100** at step **416** to store this step count in a counter for later use. In other embodiments, the motion sensing application may be configured to direct device **100** at step **416** to display this step count to a user (e.g., on display **111**). Time F of step **408** may be less than, equal to, or greater than time N of step **412**. Times N and F may be defined by motion sensor **112**, by a motion sensing application, by other programs or components of device **100**, by the user of device **100**, or by any other suitable mechanism. More power may be conserved using the power mode management of process **400** as time F is increased with respect to time N. That is, the longer device **100** is operating in the inactive mode as compared to the amount of time device is operating in the active mode, more power may be conserved. After step **416**, process **400** may return to step **406** and steps **406**-**414** may be repeated.

It is understood that the steps shown in process **400** of FIG. **4** are merely illustrative and that existing steps may be modified or omitted, additional steps may be added, and the order of certain steps may be altered.

The processes described with respect to FIGS. **3**A-**3**D and **4**, as well as any other aspects of the invention, may each be implemented by software, but can also be implemented in hardware or a combination of hardware and software. They each may also be embodied as computer readable code recorded on a computer readable medium. The computer readable medium may be any data storage device that can store data which can thereafter be read by a computer system. Examples of the computer readable medium include read-only memory, random-access memory, flash memory, CD-ROMs, DVDs, magnetic tape, and optical data storage devices. The computer readable medium can also be distributed over network-coupled computer systems so that the computer readable code is stored and executed in a distributed fashion.

Insubstantial changes from the claimed subject matter as viewed by a person with ordinary skill in the art, now known or later devised, are expressly contemplated as being equivalently within the scope of the claims. Therefore, obvious substitutions now or later known to one with ordinary skill in the art are defined to be within the scope of the defined elements.

The above-described embodiments of the invention are presented for purposes of illustration and not of limitation.

What is claimed is:

1. A method for controlling power consumption of an electronic device, the method comprising:

providing power to a motion sensor of the device during a first inactive power mode of the device;

detecting a magnitude of a motion event that exceeds a threshold using the motion sensor;

switching from the first inactive power mode to a first active power mode of the device in response to the detecting;

determining whether the motion event is associated with an intentional user input; and

returning from the first active power mode to the first inactive power mode in response to a determination that the motion event is not associated with an intentional user input, wherein the switching comprises the motion sensor instructing a processor of the device to ignore an instruction of an application.

2. The method of claim **1**, wherein the instructing comprises:

generating a wake up signal using the motion sensor in response to the detecting; and

receiving the wake up signal using a power management unit of the device, wherein the switching comprises switching from the first inactive power mode to the first active power mode in response to the receiving.

3. The method of claim **1**, wherein the switching further comprises:

activating at least a portion of the processor of the device; and

loading the processor with the application.

4. The method of claim **1**, wherein the first inactive power mode is a hibernate power mode, and wherein the returning comprises powering down the processor.

5. The method of claim **1**, wherein the returning comprises:

unloading the application from the processor of the device; and

deactivating at least a portion of the processor.

6. The method of claim **1**, wherein the application is a motion sensing application.

7. The method of claim **1**, wherein the instructing comprises:

generating a flag signal using the motion sensor; and

receiving the flag signal using a power management unit of the device.

8. The method of claim **1**, wherein the instruction of the application instructs the processor to at least partially activate a component of the device.

9. The method of claim **8**, wherein the component is a display output component of the device.

10. The method of claim **1**, wherein the instructing comprises setting a register of a power management unit of the device.

11. The method of claim **10**, wherein the processor detects the status of the register when running the application.

12. The method of claim **10**, wherein the returning comprises resetting the register.

13. The method of claim **10**, wherein the register is a scratch register.

14. A method for controlling power consumption of an electronic device, the method comprising:

providing power to a motion sensor of the device during a first inactive power mode of the device;

detecting a magnitude of a motion event that exceeds a threshold using the motion sensor; and

switching from the first inactive power mode to a first active power mode of the device in response to the detecting, wherein the switching comprises the motion sensor sending first information to a first component of the device to prompt:

loading a motion sensing application into a processor of the device; and

instructing the processor to bypass a device component activation step of the application.

15. The method of claim **14**, wherein the device component activation step instructs the processor to at least partially activate a display output component of the device.

16. The method of claim **14**, further comprising:

determining whether the motion event is associated with an intentional user input using the application; and

returning from the first active power mode to the first inactive power mode in response to a determination that the motion event is not associated with an intentional user input.

17. The method of claim **14**, wherein the first information comprises a wake up signal and a flag signal.

18. The method of claim **14**, wherein the first component is a power management unit.

19. The method of claim **14**, wherein the switching further comprises the motion sensor generating the first information before sending the first information to the first component.

20. The method of claim **14**, wherein the device component activation step is an initial device component activation step of the application.

21. The method of claim **14**, wherein the device component activation step is an automatic device component activation step of the application.

22. The method of claim **14**, wherein the instructing comprises setting a register of a power management unit of the device.

23. The method of claim **22**, further comprising:

resetting the register; and

returning from the first active power mode to the first inactive power mode.

24. The method of claim **22**, wherein the instructing comprises the processor detecting the status of the register.

25. The method of claim **22**, wherein the power management unit is the first component.

26. The method of claim **22**, wherein the register is a scratch register.

* * * * *