US00RE44884E

(19) **United States**
(12) **Reissued Patent**
Lambarth

(10) **Patent Number: US RE44,884 E**
(45) **Date of Reissued Patent: May 13, 2014**

(54) **AMBULANCE COT WITH PINCH SAFETY FEATURE**

(75) Inventor: **Clifford E. Lambarth**, Portage, MI (US)

(73) Assignee: **Stryker Corporation**, Kalamazoo, MI (US)

(21) Appl. No.: **13/068,358**

(22) Filed: **May 9, 2011**

Related U.S. Patent Documents

Reissue of:
(64) Patent No.: **7,540,047**
Issued: **Jun. 2, 2009**
Appl. No.: **12/002,958**
Filed: **Dec. 19, 2007**

U.S. Applications:
(62) Division of application No. 11/172,434, filed on Jun. 30, 2005, now Pat. No. 7,398,571.

(60) Provisional application No. 60/613,151, filed on Sep. 24, 2004.

(51) **Int. Cl.**
A61G 1/02 (2006.01)
A61G 15/06 (2006.01)

(52) **U.S. Cl.**
USPC **5/611**; 5/86.1

(58) **Field of Classification Search**
USPC ..... 5/11, 611, 118, 86.1; 108/145, 147.2, 108/147.22, 144.11, 147; 254/2 R, 8 R, 9 R
See application file for complete search history.

(56) **References Cited**

U.S. PATENT DOCUMENTS

1,221,327 A 4/1917 Honold
2,538,993 A 1/1951 Travis
2,632,898 A 3/1953 Pardoe
2,687,536 A 8/1954 Miller
2,833,587 A 5/1958 Saunders
2,908,916 A 10/1959 Fischer et al.
2,958,873 A 11/1960 Ferneau
3,034,341 A 5/1962 Golubovic
3,099,020 A 7/1963 Garfield et al.

(Continued)

FOREIGN PATENT DOCUMENTS

GB 2 302 672 A 1/1997
GB 2 368 317 A 5/2002

(Continued)

OTHER PUBLICATIONS

Defendant Monster Medic, Inc.'s Prior Art Disclosure dated Sep. 10, 2010 (5 pages): Case No. 1:09-cv-1142.

Primary Examiner — Michael Trettel
(74) *Attorney, Agent, or Firm* — Flynn, Thiel, Boutell & Tanis, P.C.

(57) **ABSTRACT**

An ambulance cot is disclosed and the ambulance cot has, if desired, a wheel supported base and a litter raisable and lowerable by a powered elevating mechanism oriented between the base and the litter. The ambulance cot also has wireless communication capability to facilitate communication between the ambulance cot and a loading system on an ambulance as well as facilitating wireless troubleshooting via a handheld wireless unit. The ambulance cot also has a longitudinally extendable head section. The ambulance cot also has several accessories, such as an accessory hook mounted to the underside of the fowler, and a collapsible pouch accessory fastened to the retractable head section and the litter frame as well as a pinch safety feature.

6 Claims, 61 Drawing Sheets

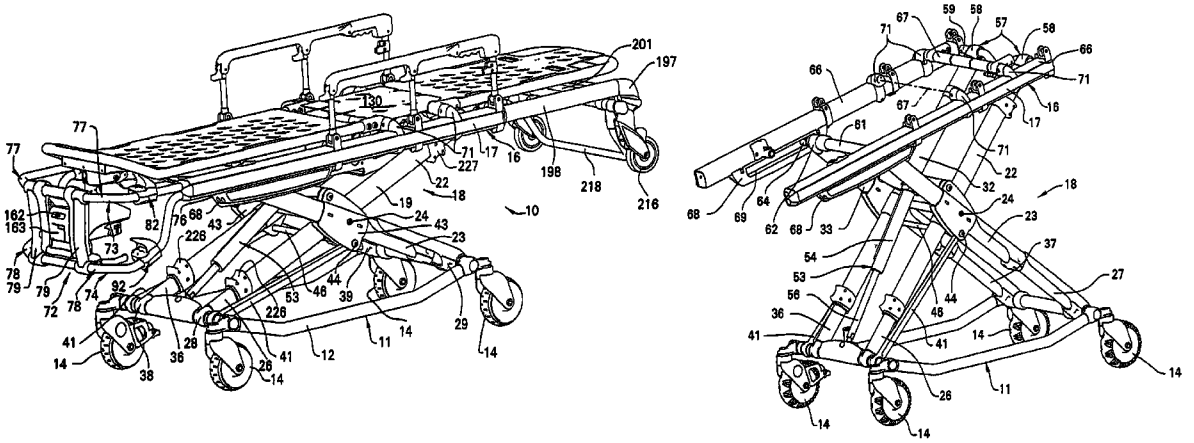

(56) **References Cited**

U.S. PATENT DOCUMENTS

3,174,722 A * 3/1965 Alm ..... 254/93 HP
3,203,670 A 8/1965 Farris
3,208,432 A 9/1965 Fisk
3,220,020 A 11/1965 Nelson
3,282,566 A 11/1966 Clarke
3,304,116 A 2/1967 Stryker
3,373,453 A 3/1968 Goodman
3,386,067 A 5/1968 Costanzo
3,393,004 A 7/1968 Williams
3,571,826 A 3/1971 Burst
3,630,565 A 12/1971 Lehmann
3,644,944 A * 2/1972 Bourgraf et al. 5/610
3,673,620 A 7/1972 Saunders
3,711,876 A 1/1973 Kirkland et al.
3,742,527 A 7/1973 Johnston et al.
3,743,344 A 7/1973 Jameson
3,805,712 A 4/1974 Taylor et al.
3,814,414 A 6/1974 Chapa
3,815,164 A 6/1974 Smith
3,820,838 A 6/1974 Limpach
3,826,528 A 7/1974 East
3,831,996 A 8/1974 Layer
3,836,900 A 9/1974 Mansfield
3,917,076 A 11/1975 Campbell
3,918,554 A 11/1975 Bourgraf et al.
3,980,334 A 9/1976 Ferneau et al.
4,071,222 A 1/1978 Wright
4,078,269 A 3/1978 Weipert
4,097,941 A 7/1978 Merkel
4,125,242 A 11/1978 Meiller et al.
4,149,762 A 4/1979 Olsson et al.
4,164,355 A 8/1979 Eaton et al.
4,175,783 A 11/1979 Pioth
4,192,541 A * 3/1980 Ferneau 296/20
4,222,132 A 9/1980 Crim et al.
4,227,269 A 10/1980 Johnston
4,271,545 A 6/1981 Christian, III
4,327,453 A 5/1982 Sefton
4,407,543 A 10/1983 Mashuda
4,435,862 A 3/1984 King et al.
4,449,262 A 5/1984 Jahsman et al.
4,489,449 A 12/1984 Failor et al.
4,534,077 A 8/1985 Martin
4,539,560 A 9/1985 Fleck et al.
4,556,198 A 12/1985 Tominaga
4,558,847 A 12/1985 Coates
4,559,656 A 12/1985 Foster
4,567,894 A 2/1986 Bergman
4,576,539 A 3/1986 Williams
4,613,122 A 9/1986 Manabe
4,624,437 A 11/1986 Sakamoto
4,667,354 A 5/1987 Carey, Jr. et al.
4,671,728 A 6/1987 Clark et al.
4,675,926 A 6/1987 Lindblom et al.
4,682,810 A 7/1987 Zarka
4,751,754 A 6/1988 Bailey et al.
4,767,148 A 8/1988 Ferneau et al.
4,858,482 A 8/1989 Knudsen
4,860,394 A 8/1989 Benessis et al.
4,912,787 A 4/1990 Bradcovich
4,927,127 A 5/1990 Lock
4,934,468 A 6/1990 Koerber, Sr. et al.
4,939,801 A 7/1990 Schaal et al.
4,953,244 A 9/1990 Koerber, Sr. et al.
4,959,957 A 10/1990 Schmale et al.
4,961,470 A 10/1990 Koerber, Sr.
4,967,557 A 11/1990 Izumi et al.
4,984,774 A 1/1991 Zupancic et al.
5,022,105 A 6/1991 Catoe
5,054,141 A 10/1991 Foster et al.
5,063,624 A 11/1991 Smith et al.
5,074,000 A 12/1991 Soltani et al.
5,083,331 A 1/1992 Schnelle et al.
5,083,625 A 1/1992 Bleicher
5,084,922 A 2/1992 Louit
5,135,350 A 8/1992 Eelman et al.
5,172,442 A 12/1992 Bartley et al.
5,220,698 A 6/1993 Hannant
5,249,421 A 10/1993 Lunzman
5,271,113 A 12/1993 White
5,365,622 A 11/1994 Schirmer
5,435,027 A 7/1995 Bourgraf et al.
5,490,703 A 2/1996 Hewko
5,495,914 A 3/1996 DiMucci et al.
5,520,091 A 5/1996 Chromik
5,537,700 A * 7/1996 Way et al. 5/611
5,572,921 A 11/1996 Krumbeck
5,575,026 A 11/1996 Way et al.
5,586,349 A 12/1996 Hannant
5,611,096 A 3/1997 Bartlett et al.
5,613,255 A 3/1997 Bish et al.
5,666,806 A 9/1997 Dietz
5,687,655 A 11/1997 Weinschenk, Jr. et al.
5,697,471 A 12/1997 DiMucci et al.
5,701,618 A 12/1997 Brugger
5,738,306 A 4/1998 Moss et al.
5,740,884 A 4/1998 DiMucci et al.
5,779,296 A 7/1998 Hewko
5,806,111 A 9/1998 Heimbrock et al.
5,861,582 A 1/1999 Flanagan et al.
5,887,302 A 3/1999 DiMucci et al.
5,983,425 A 11/1999 DiMucci et al.
5,992,562 A 11/1999 Boeckman et al.
6,016,580 A 1/2000 Heimbrock et al.
6,024,528 A 2/2000 Taylor
6,205,601 B1 3/2001 Nessmann et al.
6,219,864 B1 4/2001 Ellis et al.
6,226,816 B1 5/2001 Webster et al.
6,230,343 B1 5/2001 Buiskool et al.
6,240,579 B1 6/2001 Hanson et al.
6,264,006 B1 7/2001 Hanson et al.
6,325,363 B1 12/2001 Sakamoto
6,332,638 B1 12/2001 Menna
6,352,240 B1 3/2002 Eckstein et al.
6,389,623 B1 5/2002 Flynn et al.
6,421,854 B1 7/2002 Heimbrock
6,526,611 B2 3/2003 Flynn et al.
6,654,973 B2 12/2003 Van Den Heuvel et al.
6,701,554 B2 3/2004 Heimbrock
6,752,224 B2 6/2004 Hopper et al.
6,772,456 B2 8/2004 Votel
6,792,633 B1 9/2004 Ito
6,862,759 B2 3/2005 Hand et al.
6,868,567 B2 3/2005 Edgerton
6,886,200 B2 5/2005 Blyshak et al.
6,902,019 B2 6/2005 Heimbrock et al.
6,908,133 B1 6/2005 Morton et al.
6,942,226 B2 9/2005 Walkingshaw
6,951,034 B2 10/2005 Shiery et al.
6,976,696 B2 12/2005 O'Krangley et al.
7,000,828 B2 2/2006 Jones
7,007,330 B2 3/2006 Kuiper et al.
7,014,000 B2 3/2006 Kummer et al.
7,017,208 B2 3/2006 Weismiller et al.
7,124,456 B2 10/2006 Palmatier et al.
7,131,151 B2 11/2006 Ferneau et al.
7,150,056 B2 12/2006 Lemire
7,191,854 B2 3/2007 Lenkman
7,389,552 B1 * 6/2008 Reed et al. 5/86.1
7,398,571 B2 * 7/2008 Souke et al. 5/611
7,515,059 B2 4/2009 Price et al.
7,521,891 B2 4/2009 Choy et al.
7,533,429 B2 5/2009 Menkedick et al.
7,540,047 B2 * 6/2009 Lambarth 5/611
7,540,547 B2 6/2009 Lambarth et al.
7,610,637 B2 11/2009 Menkedick et al.

(56) **References Cited**

U.S. PATENT DOCUMENTS

2001/0036397	A1	11/2001	Pierrou et al.
2002/0005300	A1	1/2002	Saleem
2003/0079288	A1	5/2003	Cook et al.
2005/0006155	A1	1/2005	Lenkman

FOREIGN PATENT DOCUMENTS

GB	2 390 062	A	12/2003
WO	WO 98/04228		2/1998
WO	WO 2004/064698	A2	8/2004
WO	WO 2005/122989	A1	12/2005

* cited by examiner

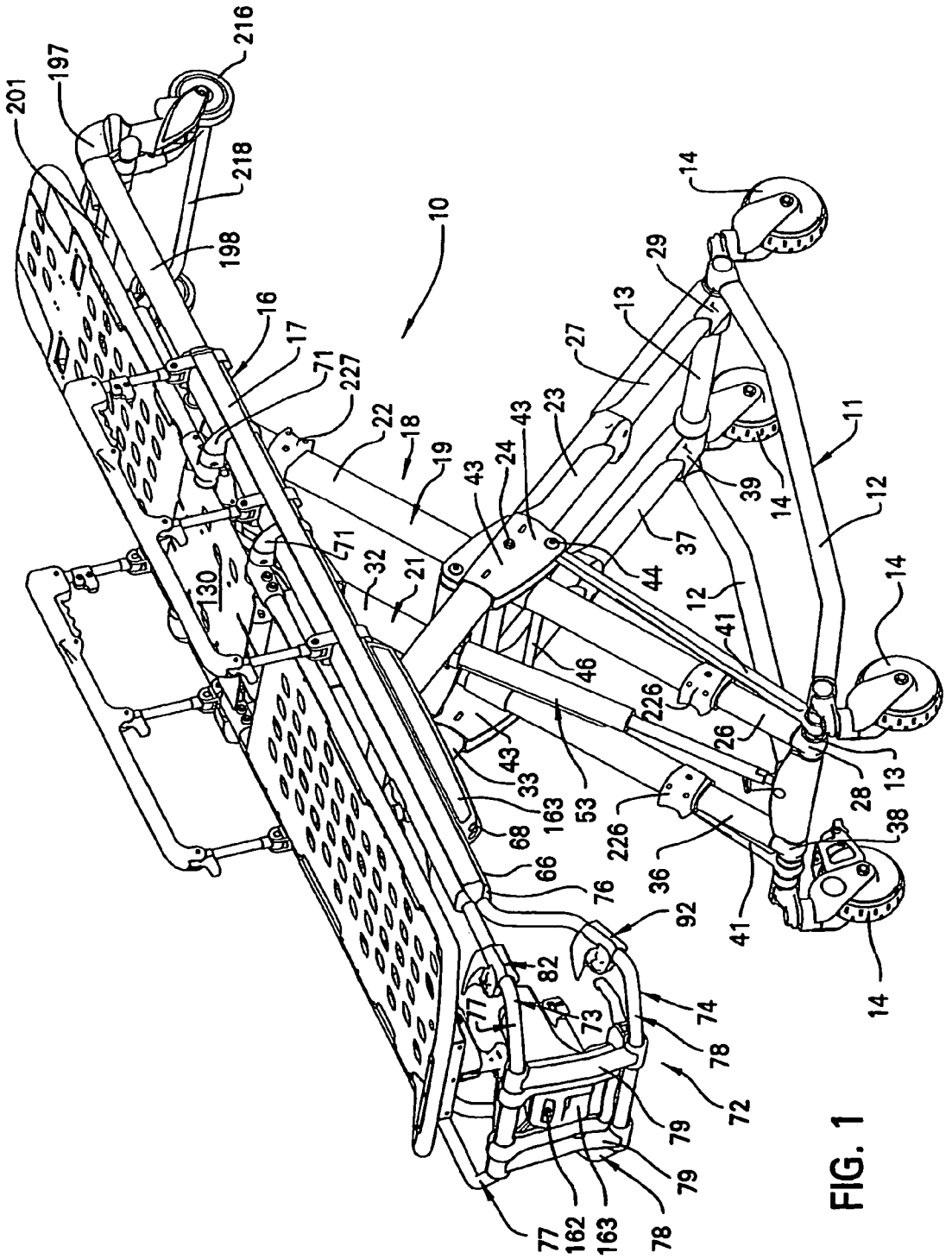
10
11
12
13
14
16
17
18
19
21
22
23
24
26
27
28
29
32
33
36
37
38
39
41
43
44
46
53
66
68
71
72
73
74
76
77
78
79
82
92
130
162
163
163
197
198
201
216
218
226
226
227

FIG. 1

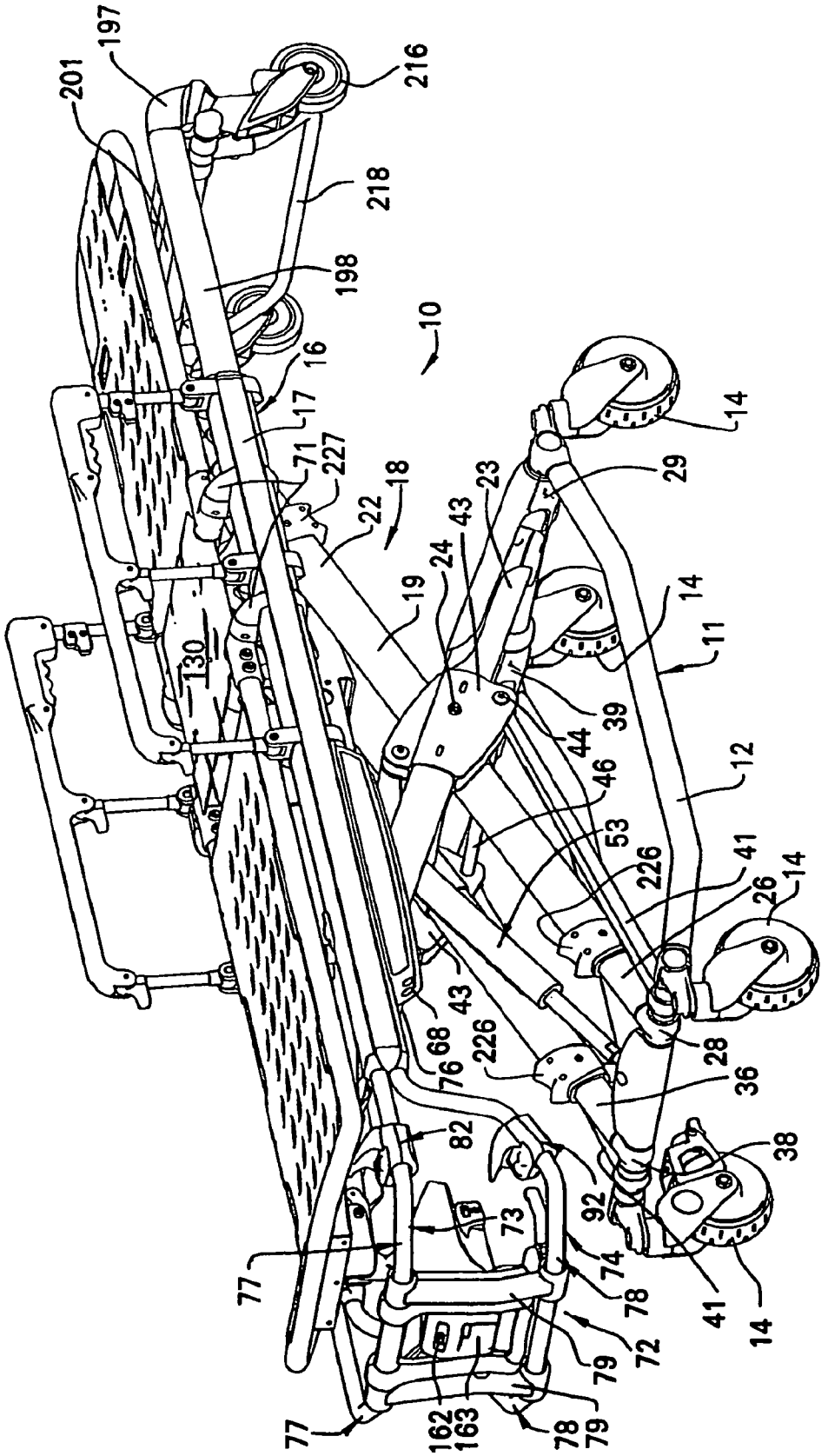
197
201
216
218
198
10
16
17
71
227
18
22
19
24
43
23
29
14
11
39
44
46
12
53
226
41
26
14
130
43
68
76
226
28
36
82
92
38
73
74
78
77
41
14
72
79
77
162
163
78
79

FIG. 2

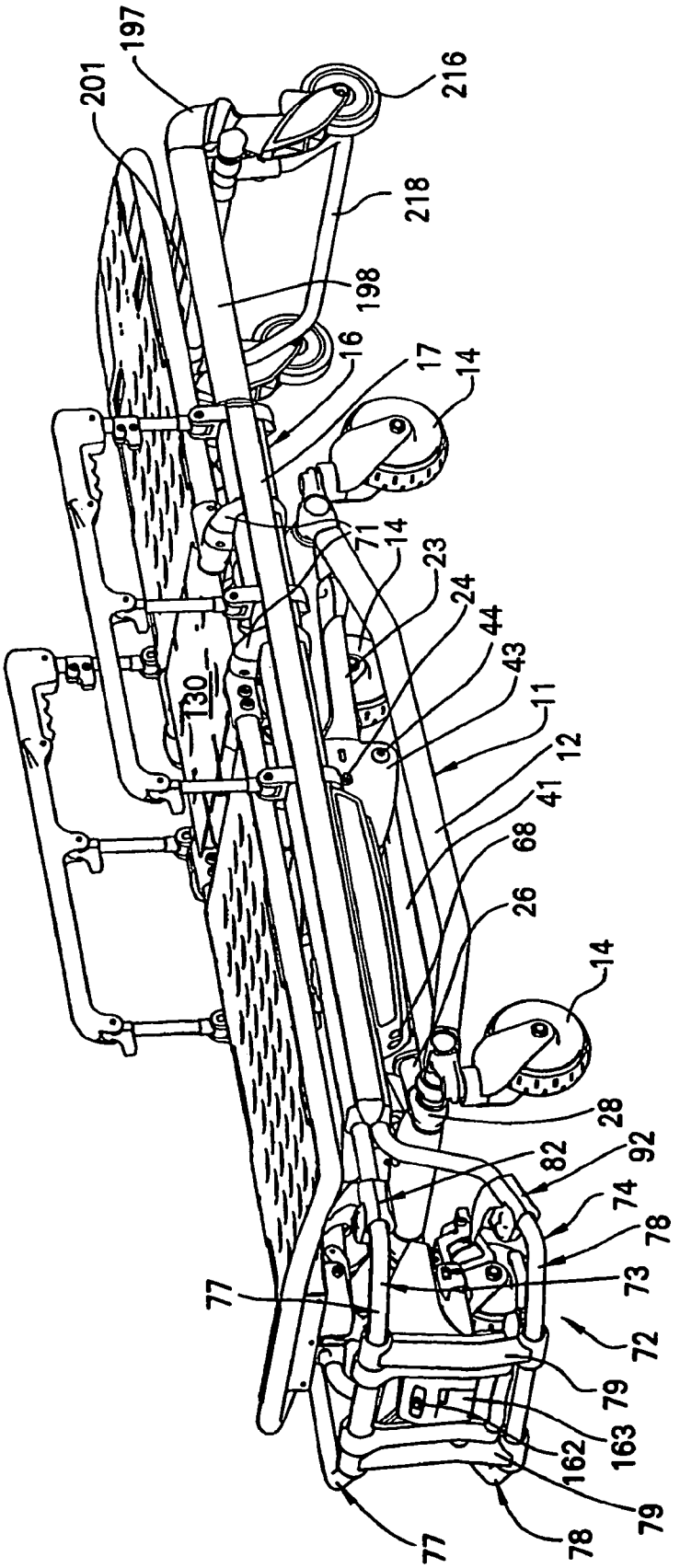
197
201
216
218
198
16
17
14
71
14
23
24
44
43
11
12
41
68
26
130
14
28
82
92
74
78
73
77
72
79
163
162
79
78
77

FIG. 3

FIG. 15

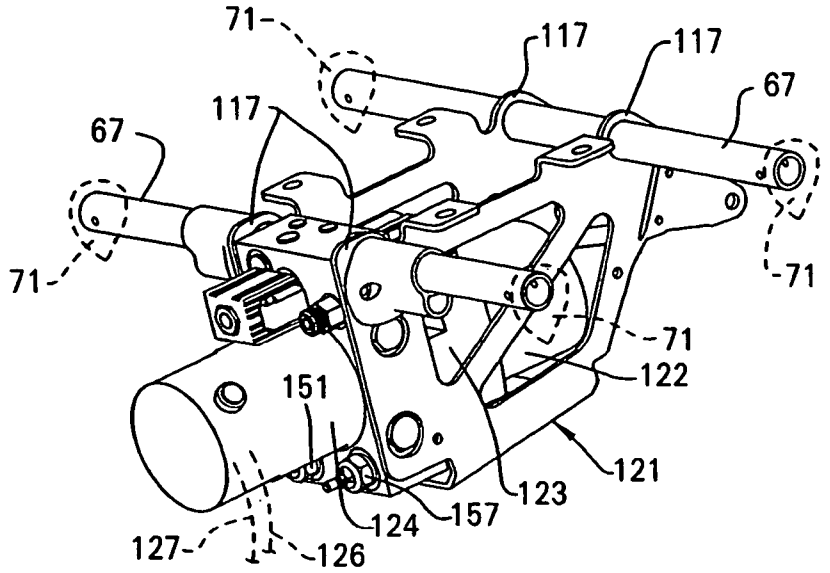
71
117
117
67
117
67
71
71
71
122
151
121
123
157
124
127
126

FIG. 4

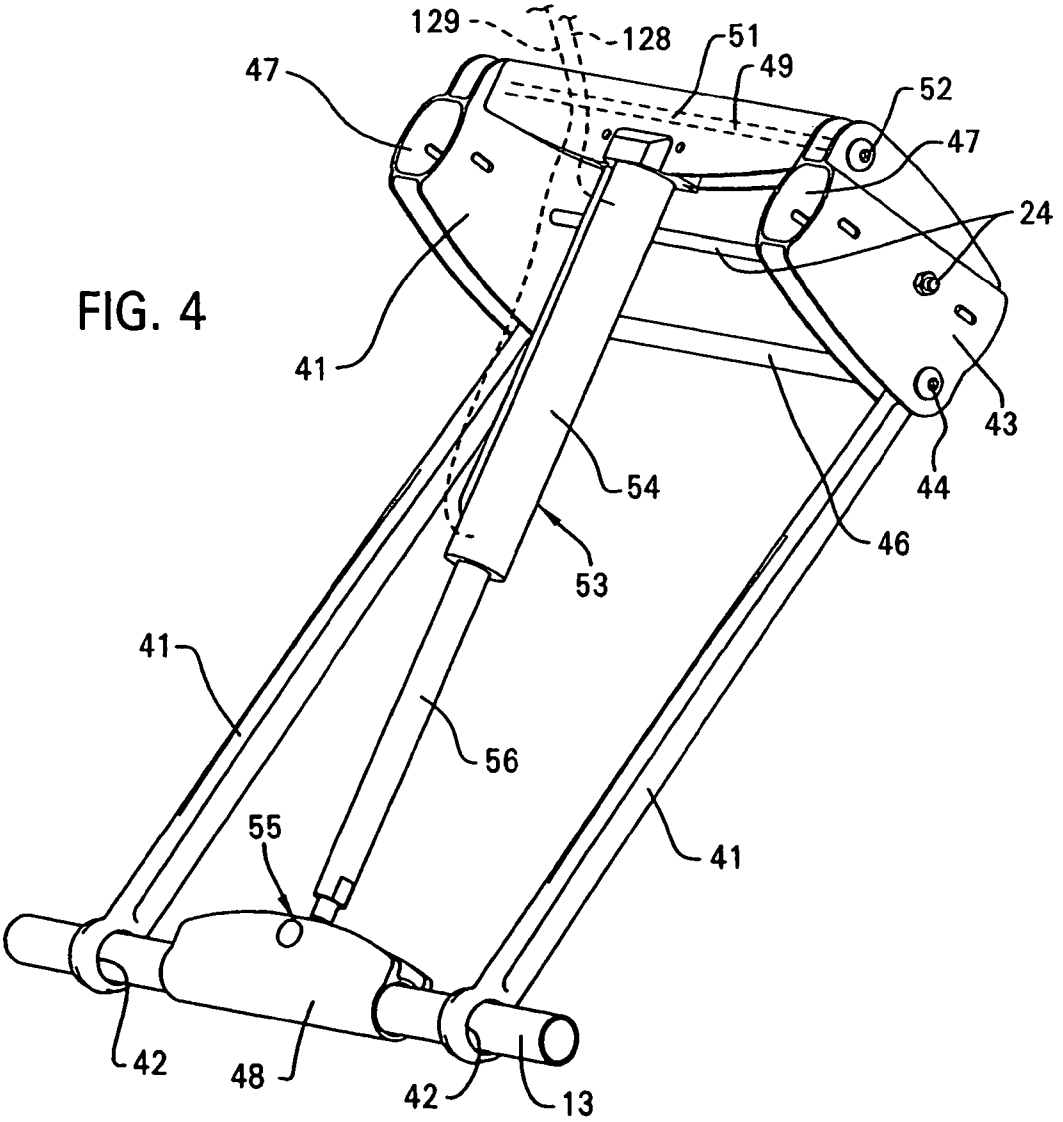
129
128
51
49
47
52
47
24
41
43
44
54
46
53
41
56
55
41
42
48
42
13

FERNO: IPR2024-00042
EXHIBIT 1001 PAGE0008

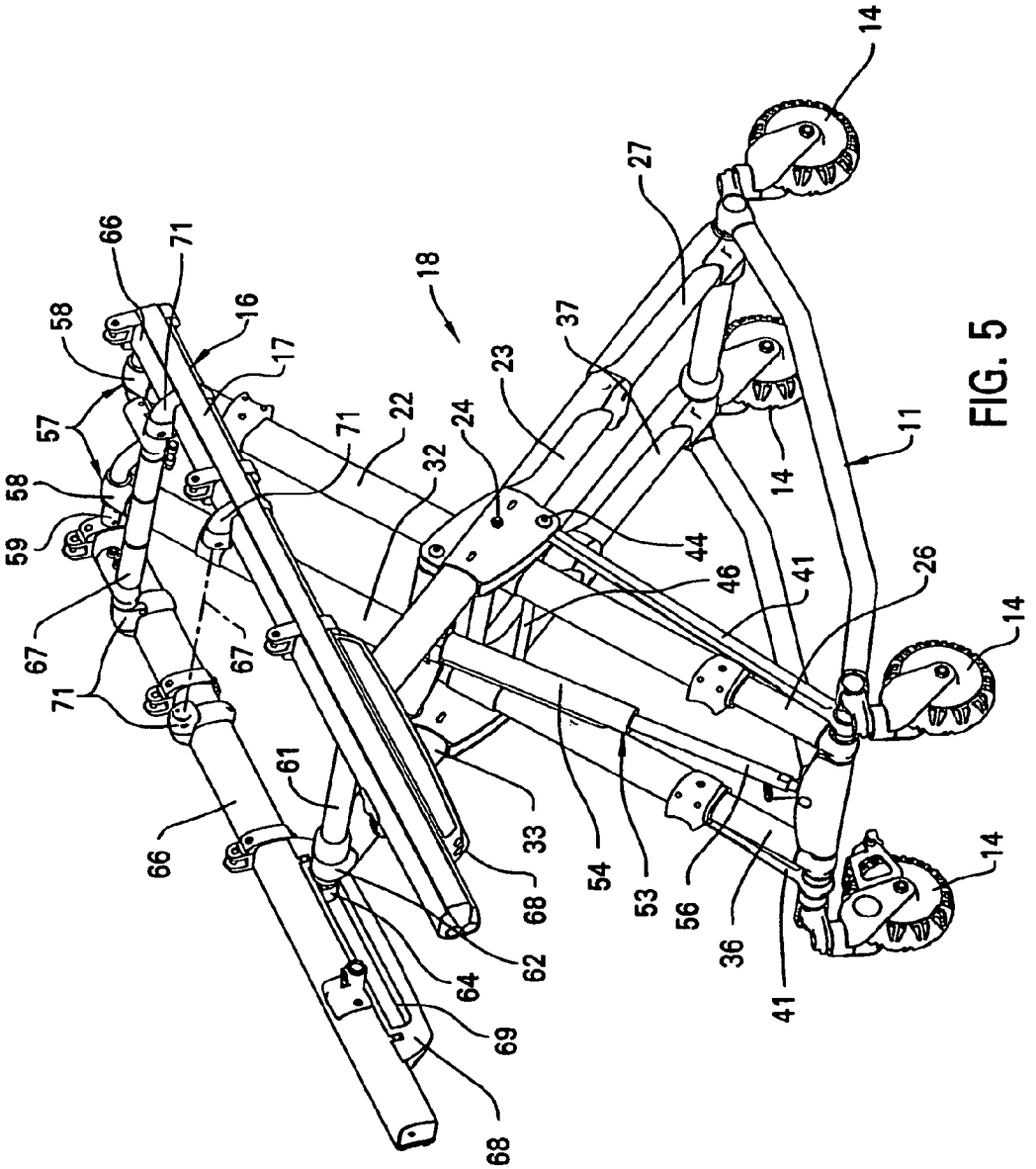

FIG. 5

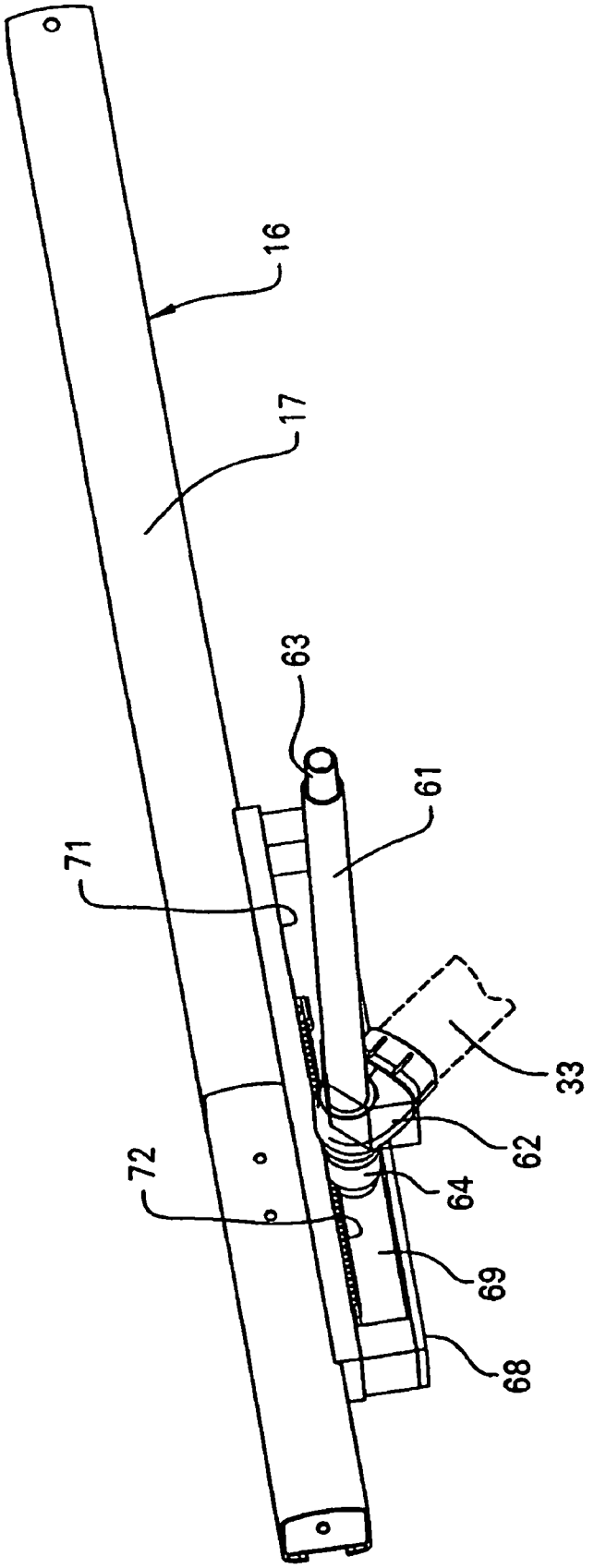

FIG.6

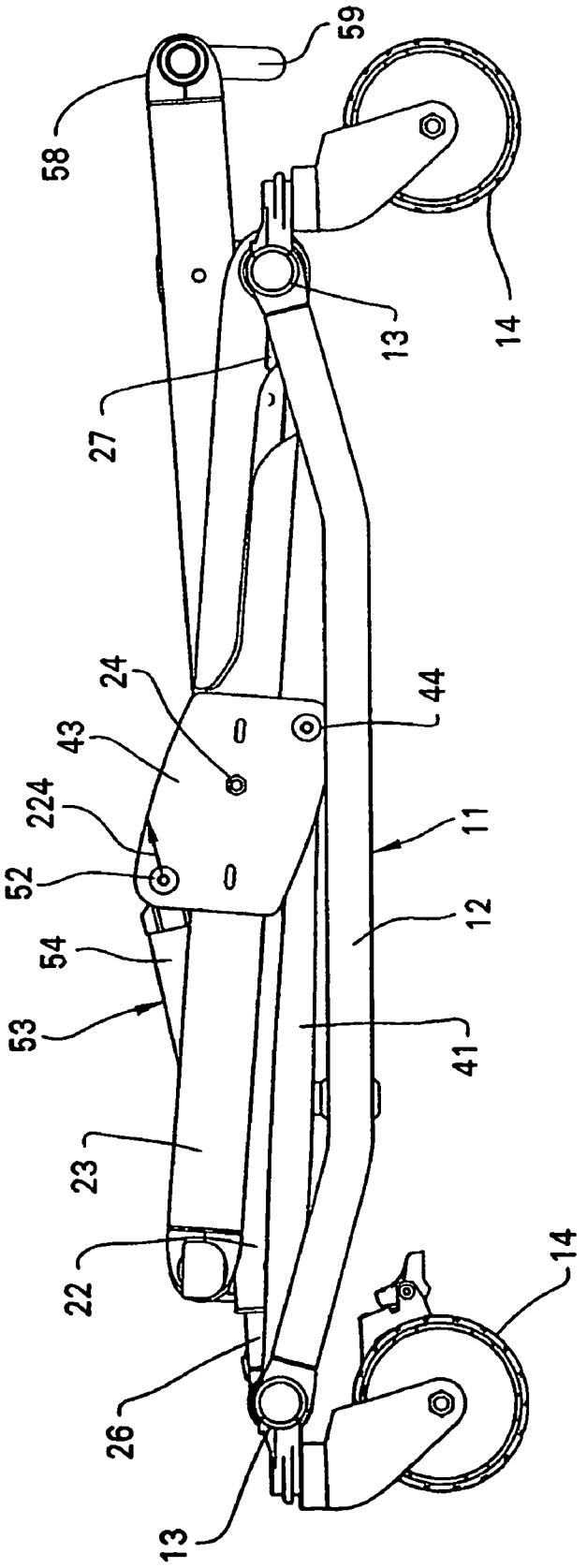

FIG. 7

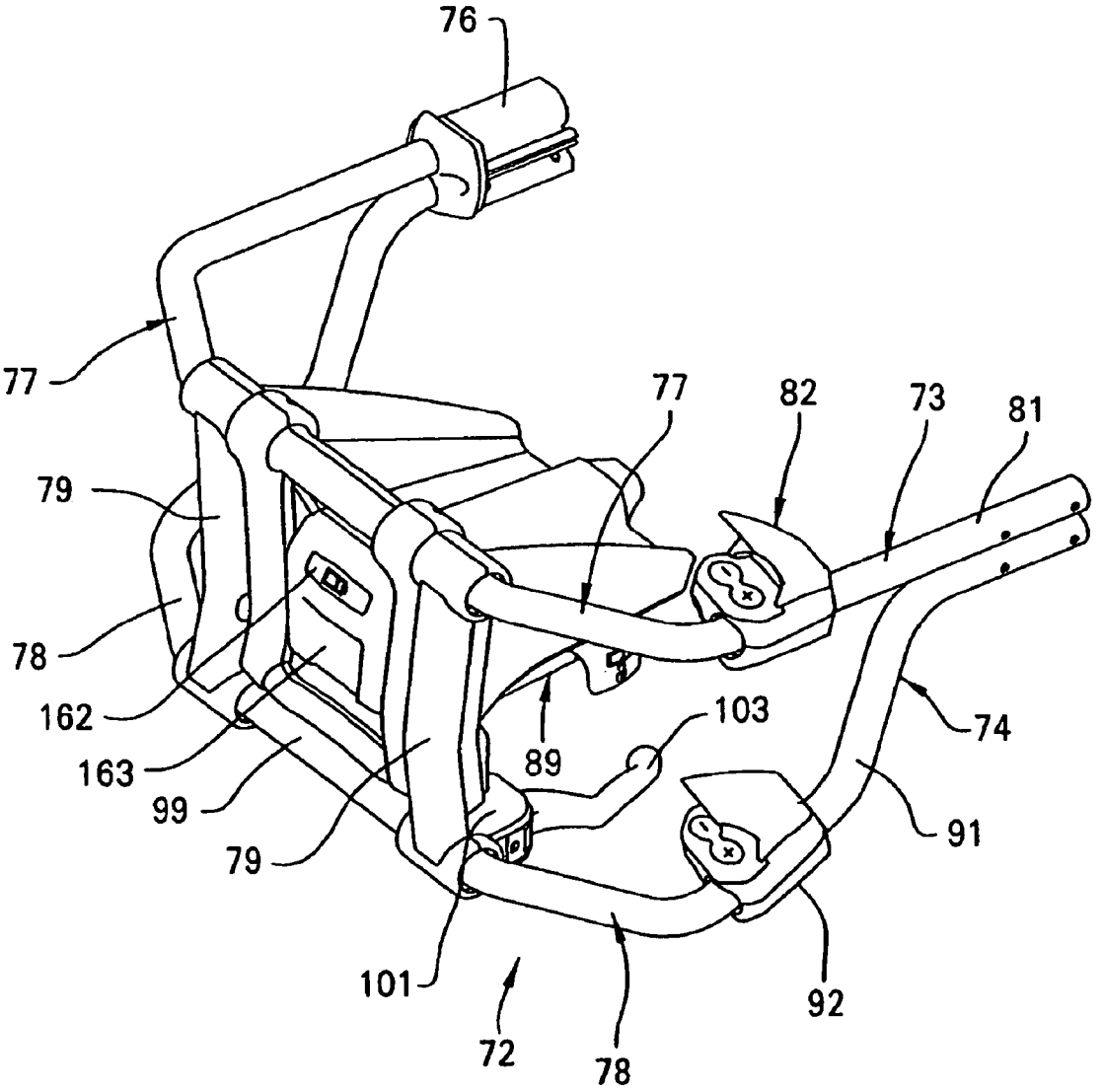

FIG. 8

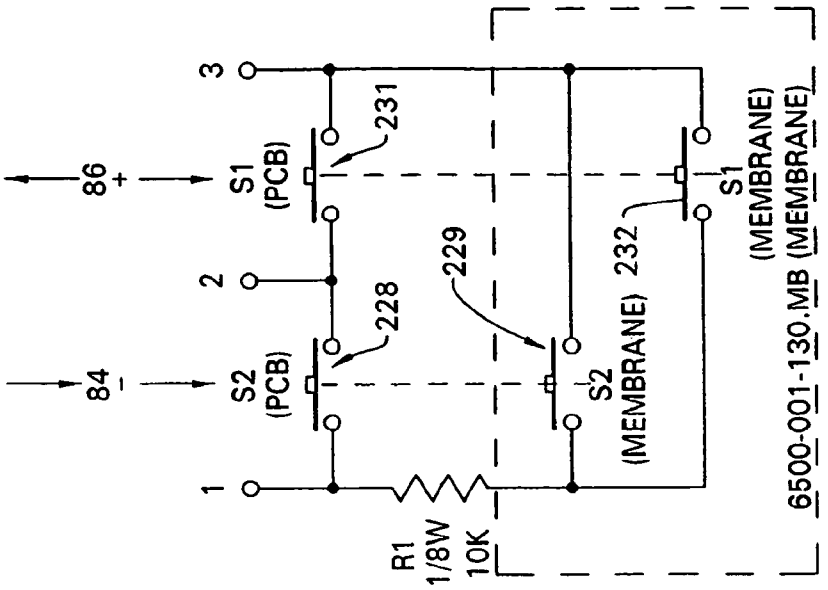
86
+
84
-
3
2
1
S1
(PCB)
S2
(PCB)
231
228
229
232
S2
(MEMBRANE)
S1
(MEMBRANE)
R1
1/8W
10K
6500-001-130.MB (MEMBRANE)

FIG. 11

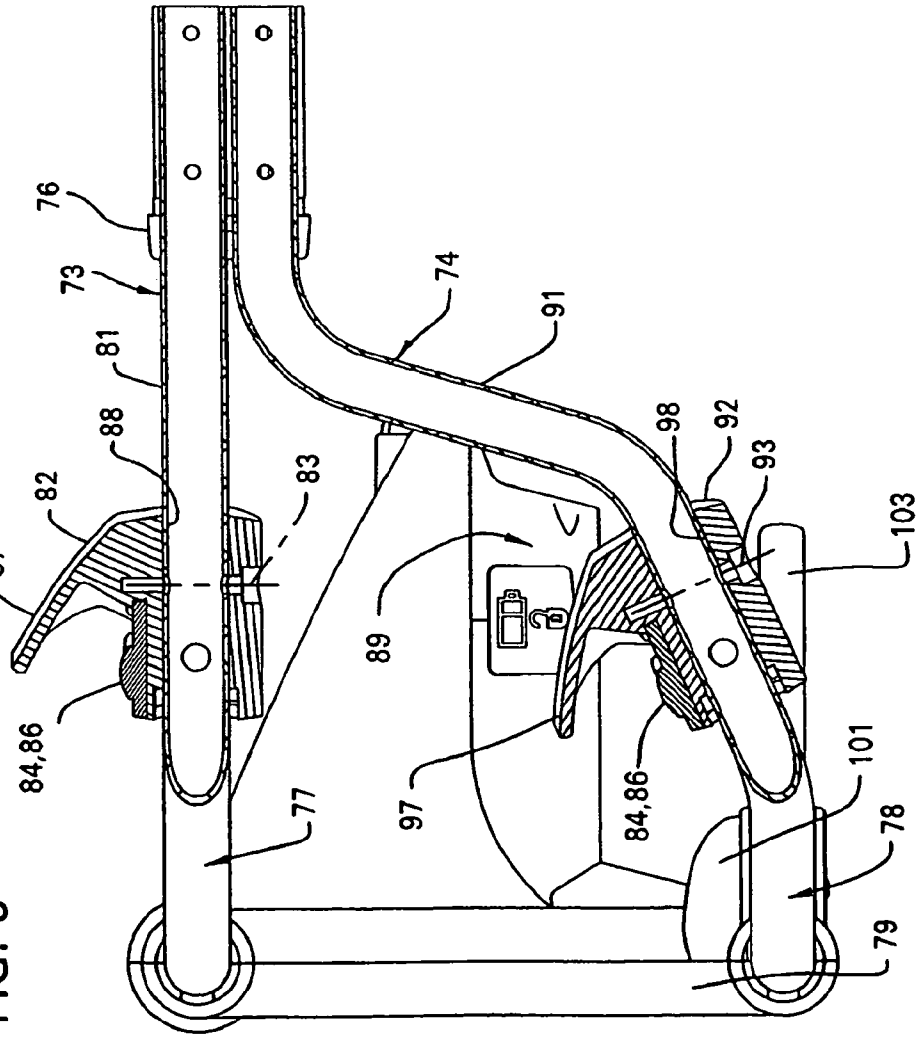
76
73
81
88
82
87
84,86
83
77
74
91
89
97
98
92
93
103
84,86
101
78
79

FIG. 9

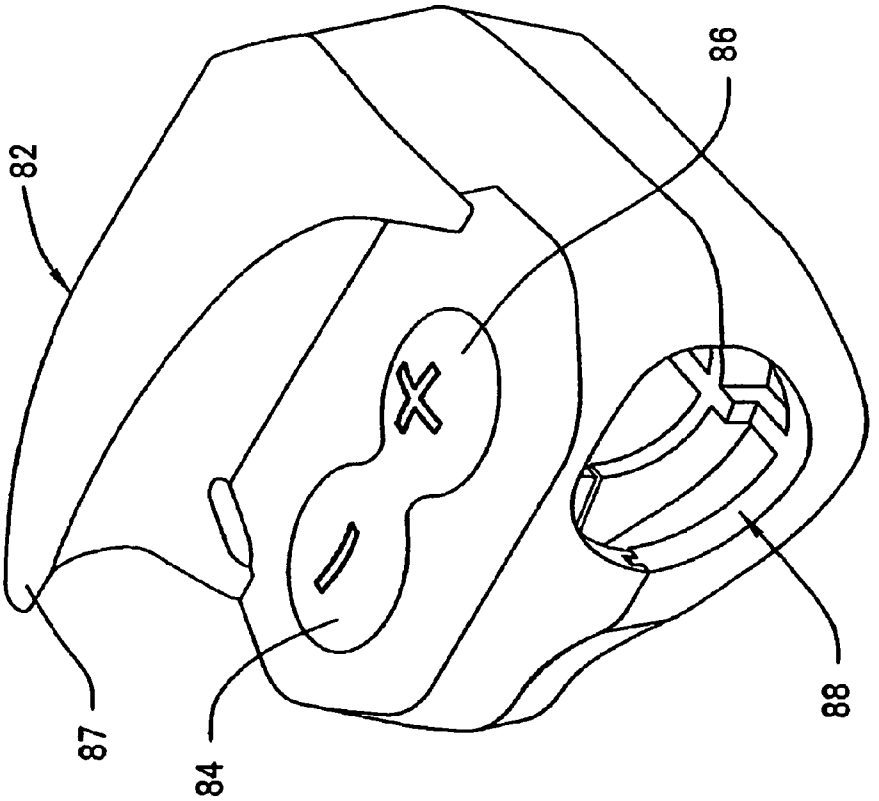

FIG. 10

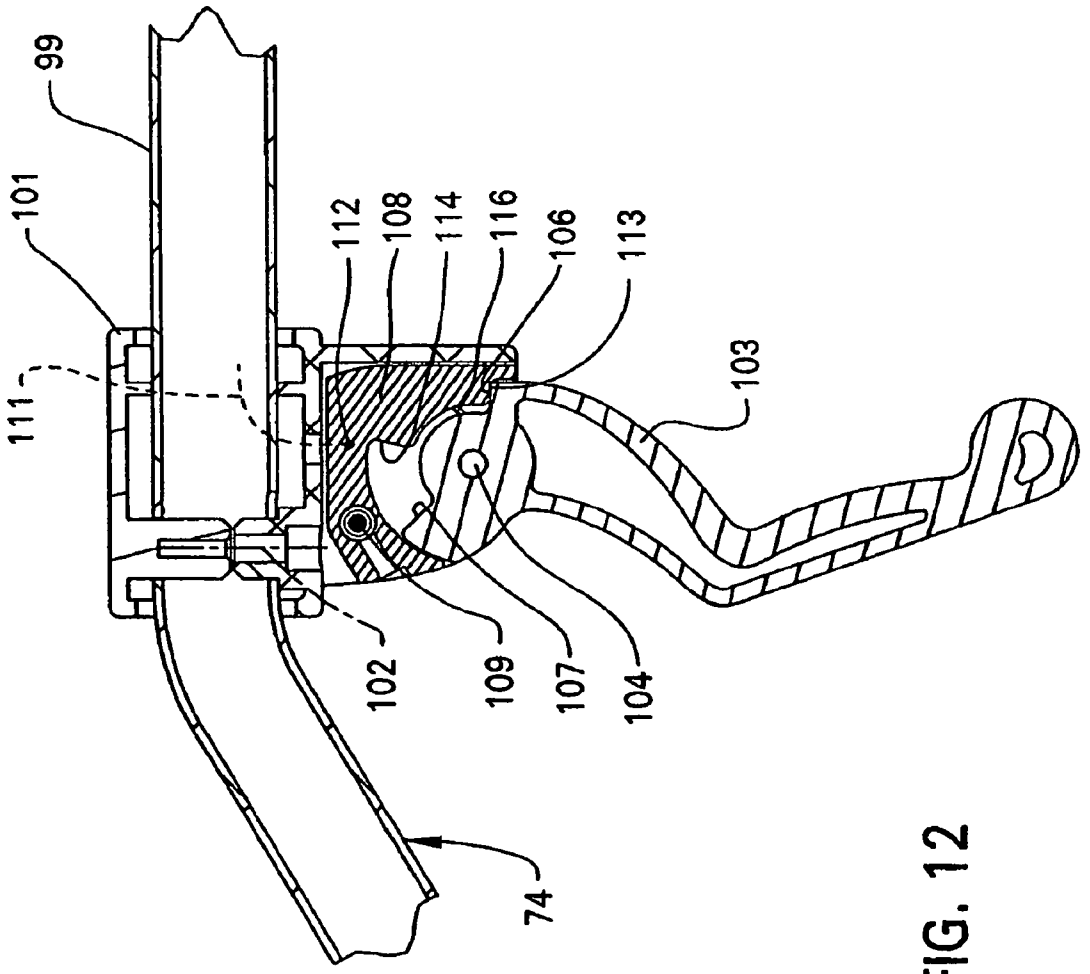

FIG. 12

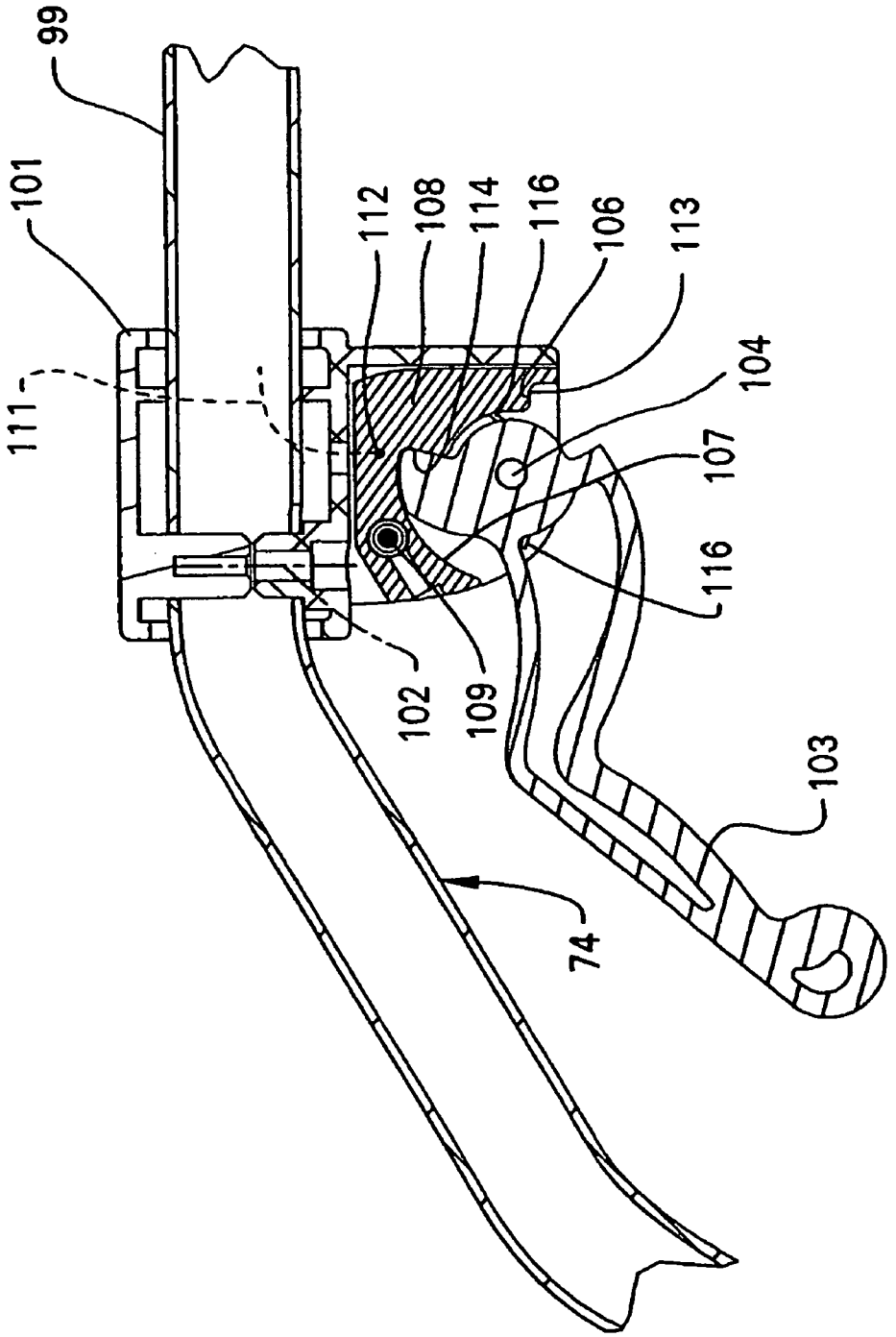

FIG. 13

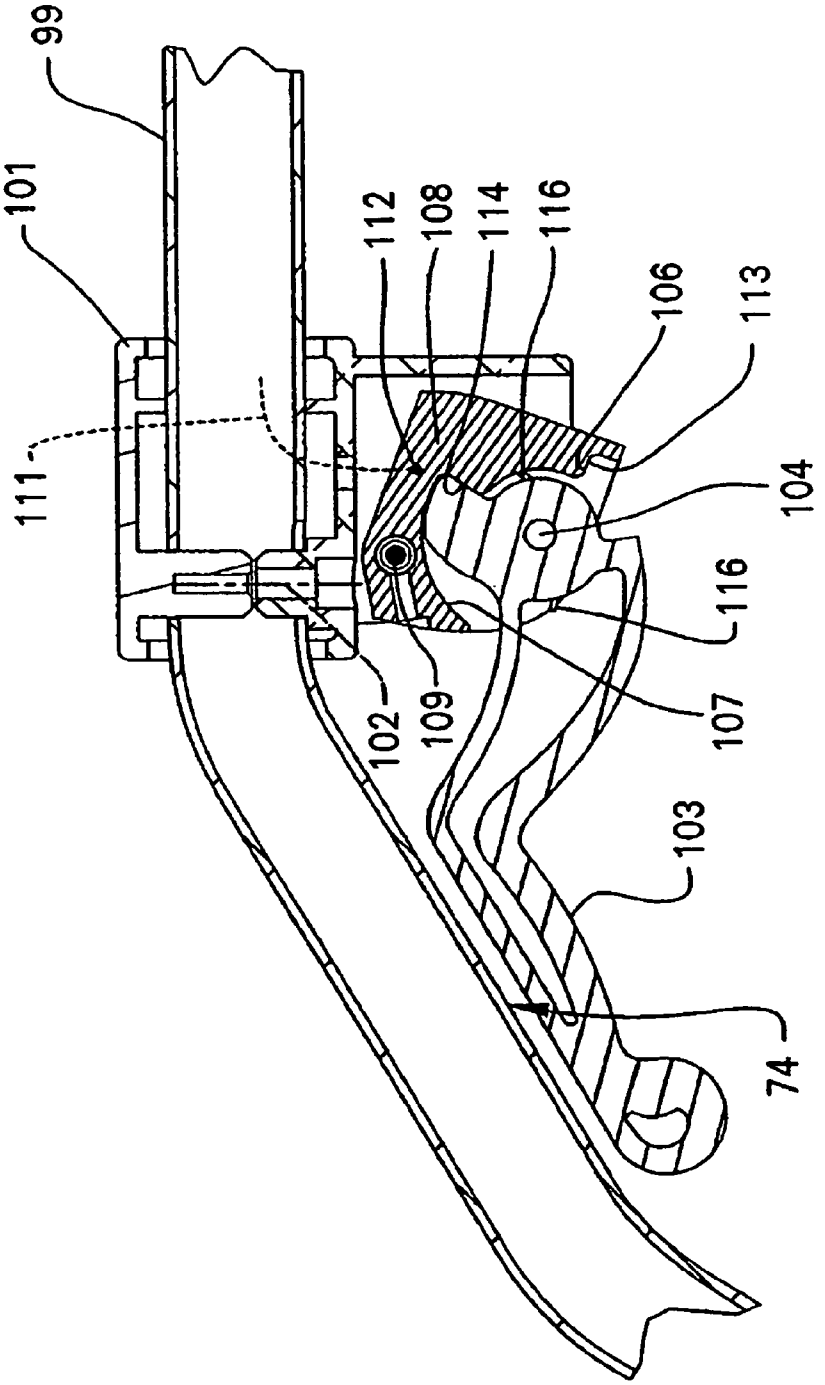

FIG. 14

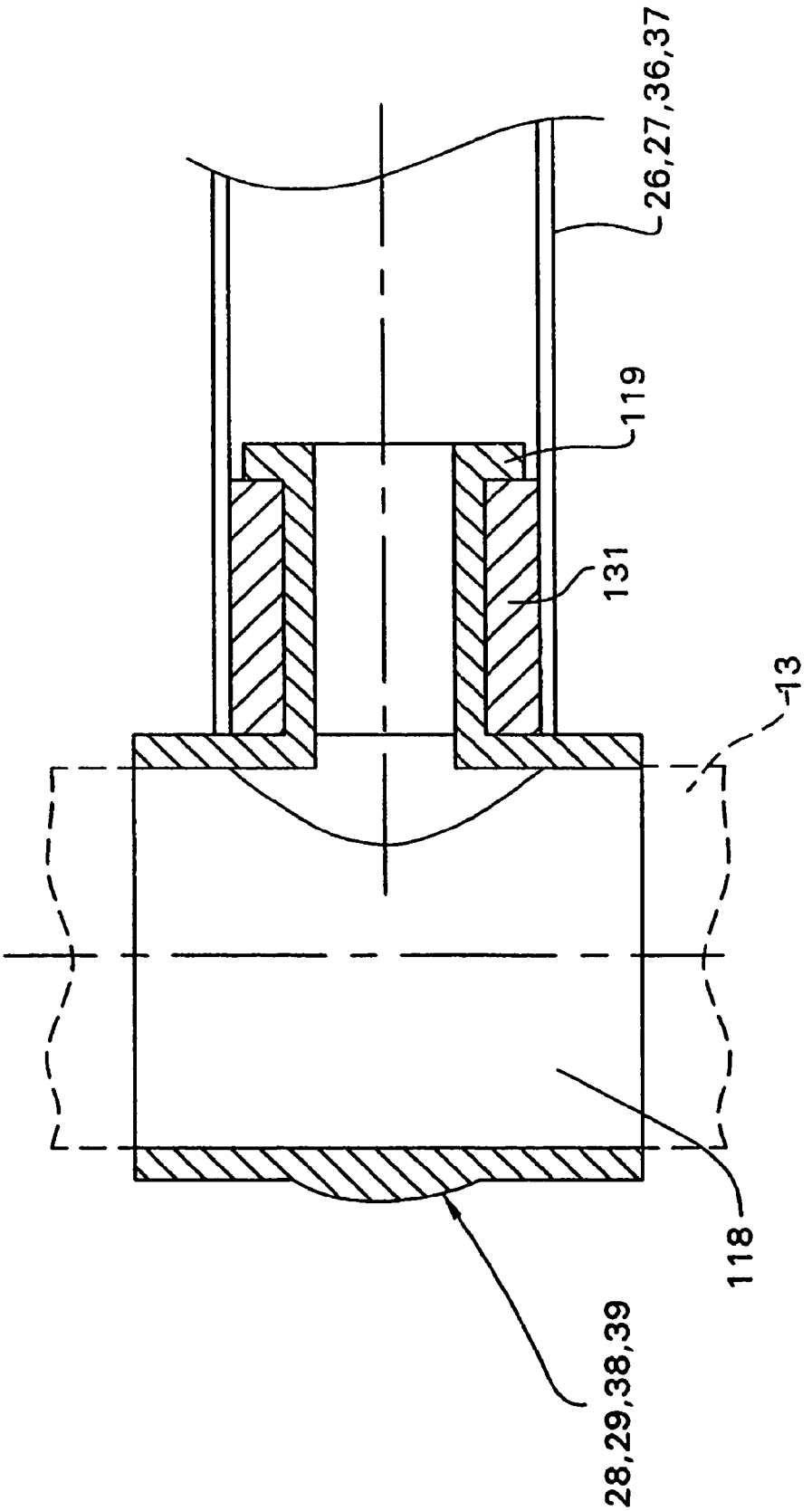

FIG. 16

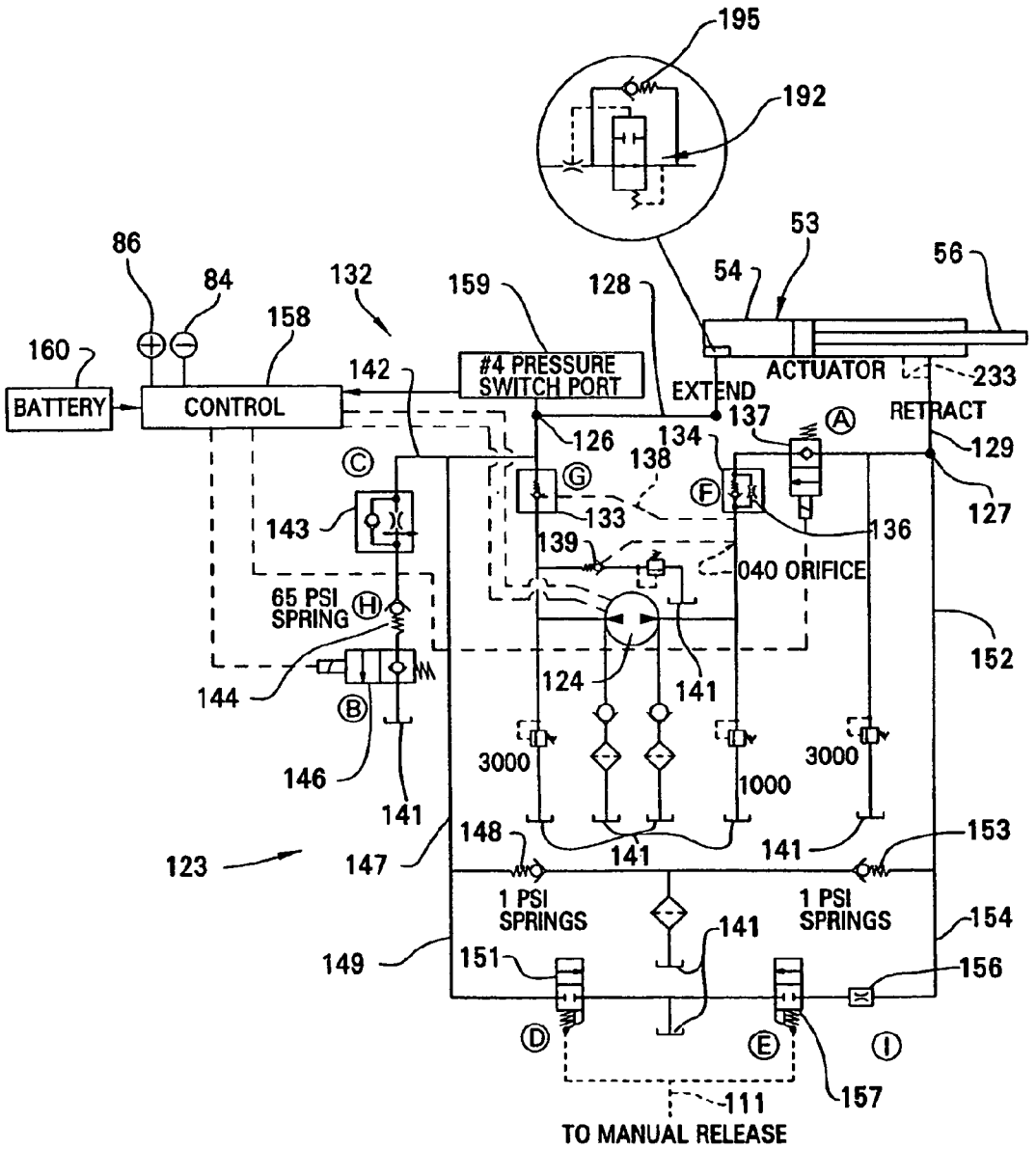
195
192
53
54
56
86
84
132
159
128
158
160
BATTERY
CONTROL
142
#4 PRESSURE SWITCH PORT
EXTEND
ACTUATOR
233
137
RETRACT
126
134
138
129
127
143
133
136
139
040 ORIFICE
65 PSI SPRING
152
124
141
144
146
3000
1000
3000
141
148
153
123
147
141
141
1 PSI SPRINGS
1 PSI SPRINGS
154
149
151
141
156
157
111
TO MANUAL RELEASE

FIG. 17

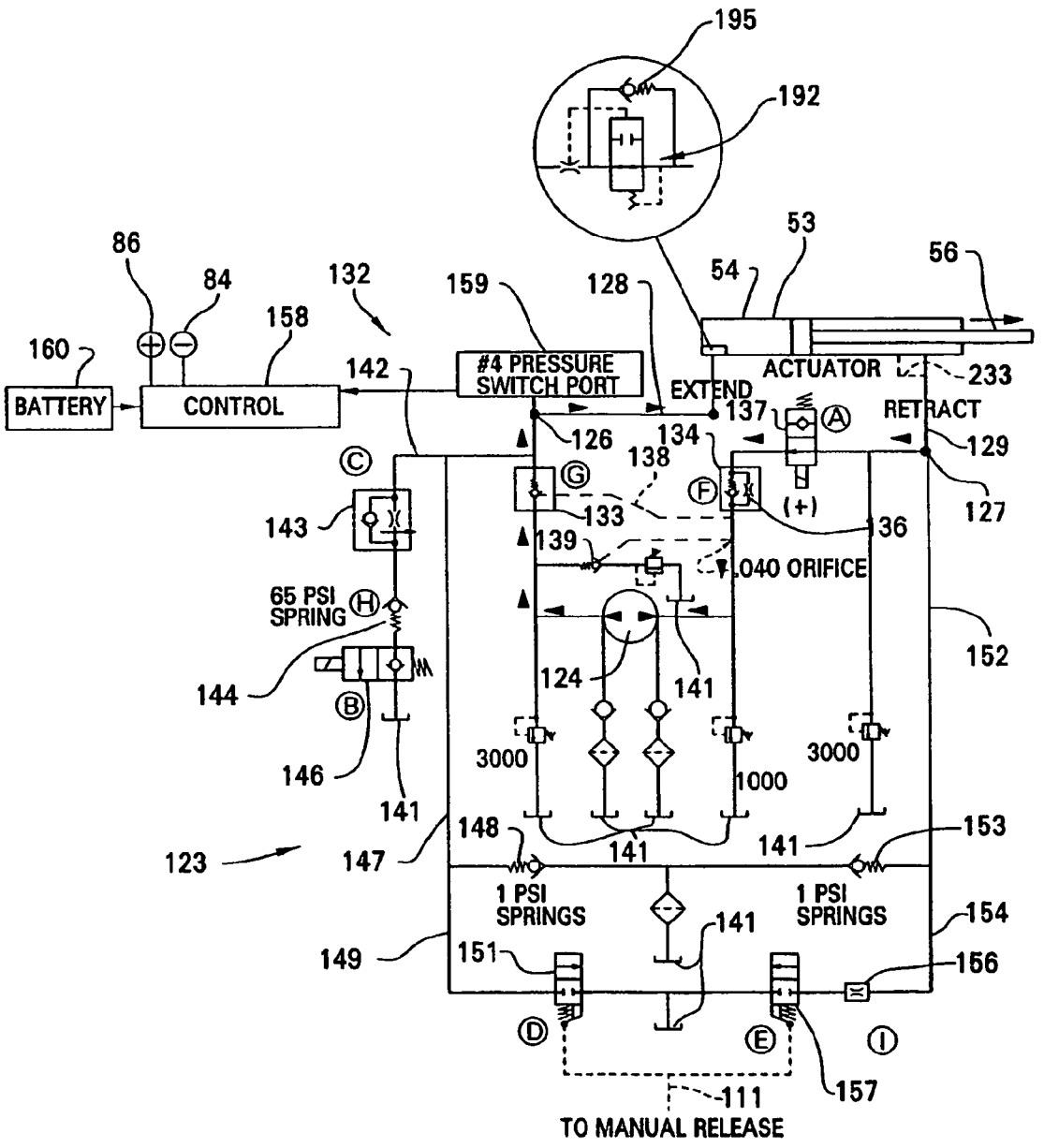
195
192
53
54
56
86
84
132
159
128
158
160
142
#4 PRESSURE SWITCH PORT
ACTUATOR
233
BATTERY
CONTROL
EXTEND
137
RETRACT
126
134
129
138
143
133
36
127
139
.040 ORIFICE
65 PSI SPRING
152
144
124
141
146
3000
1000
3000
141
148
153
123
147
141
141
1 PSI SPRINGS
1 PSI SPRINGS
154
149
151
141
156
157
111
TO MANUAL RELEASE

FIG. 18

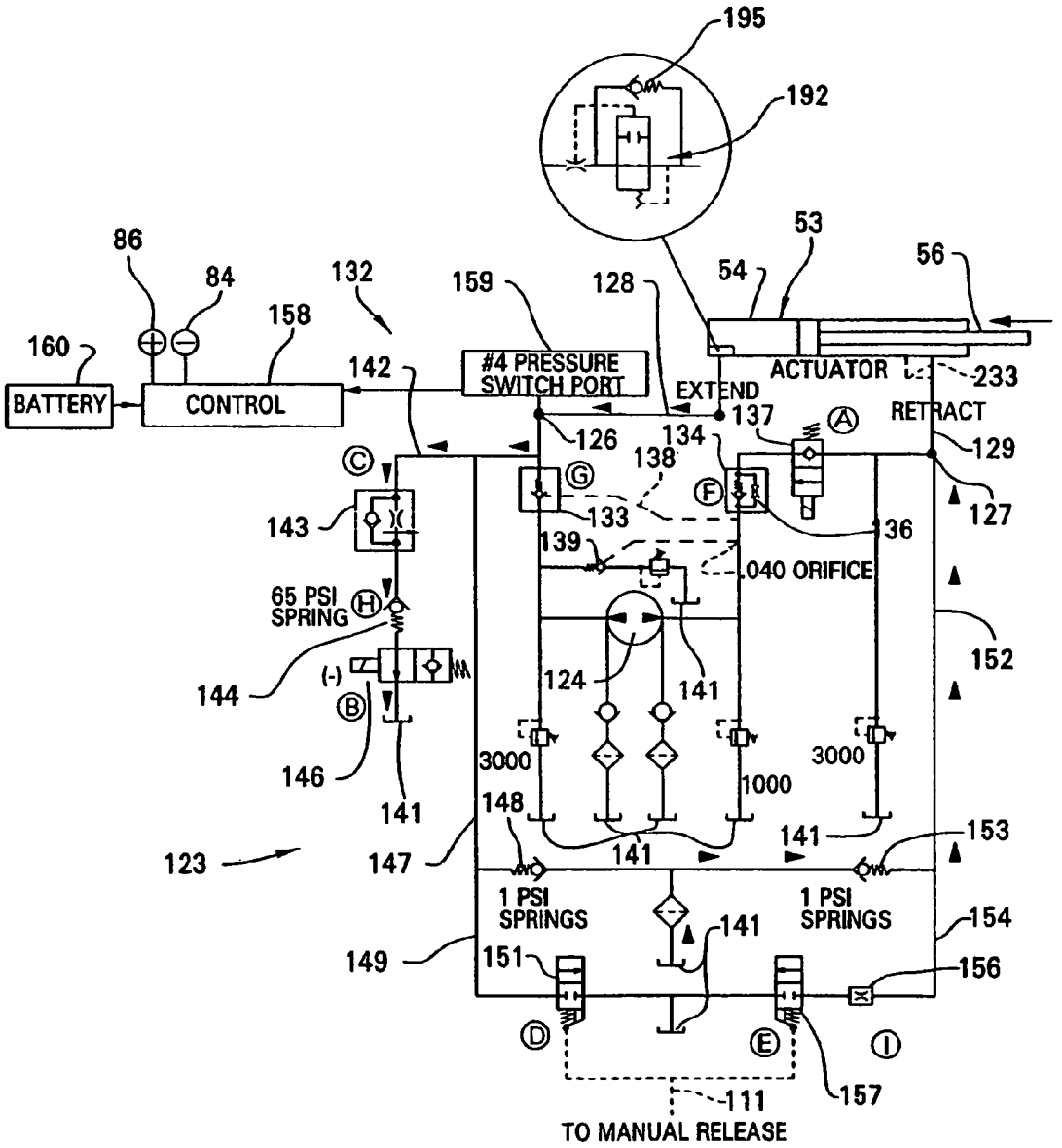
195
192
53
54
56
86
84
132
159
128
158
160
142
#4 PRESSURE SWITCH PORT
ACTUATOR
233
BATTERY
CONTROL
EXTEND
137
RETRACT
126
134
129
138
127
143
133
36
139
.040 ORIFICE
65 PSI SPRING
152
144
124
141
146
3000
1000
3000
141
148
141
153
123
147
141
1 PSI SPRINGS
1 PSI SPRINGS
154
149
151
141
156
157
111
TO MANUAL RELEASE

FIG. 19

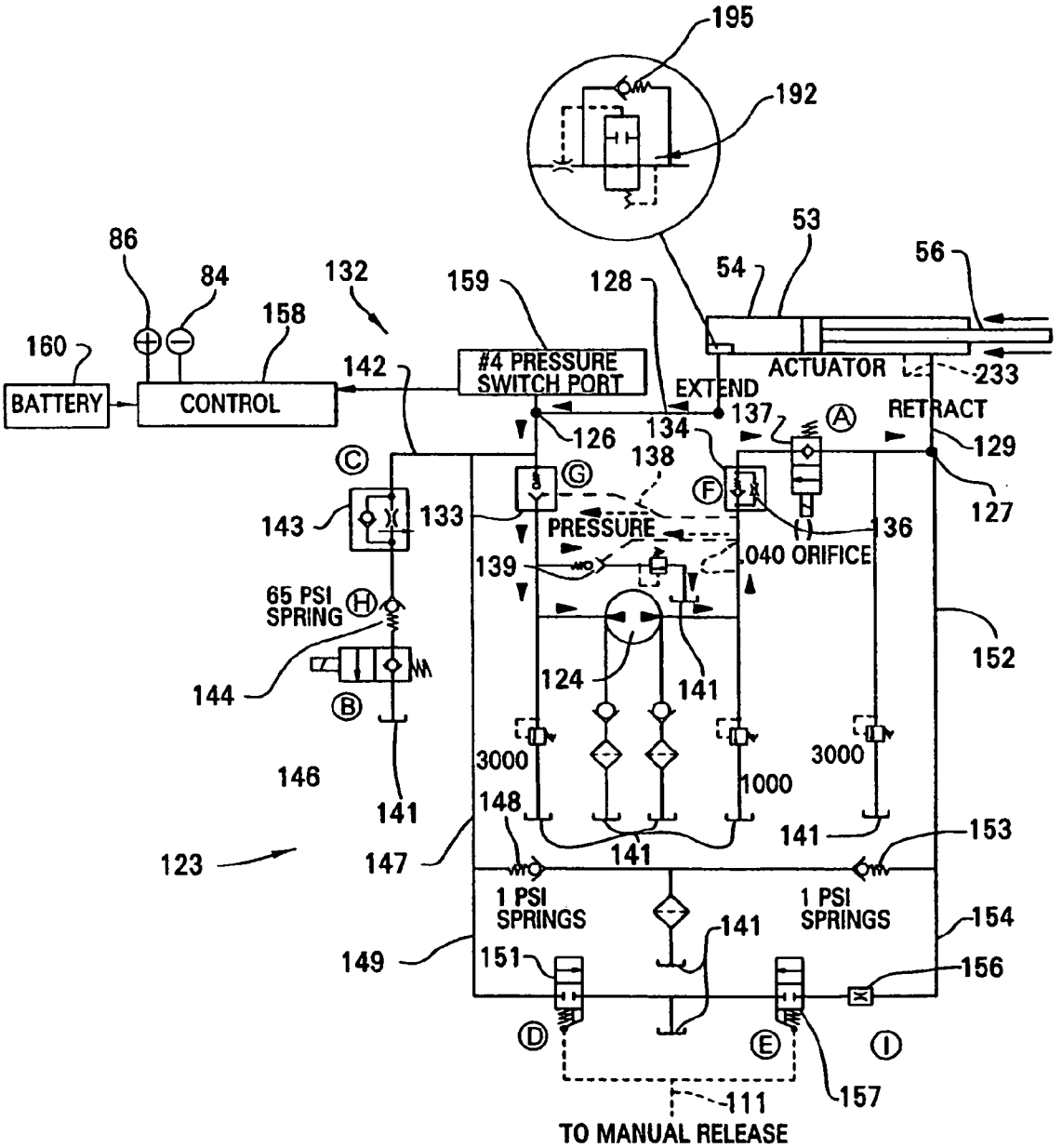
195
192
53
54
56
86
84
132
159
128
158
160
142
#4 PRESSURE SWITCH PORT
ACTUATOR
233
BATTERY
CONTROL
EXTEND
RETRACT
126
134
137
129
138
127
143
133
PRESSURE
136
139
.040 ORIFICE
65 PSI SPRING
152
144
124
141
146
3000
1000
3000
148
141
153
123
147
141
1 PSI SPRINGS
1 PSI SPRINGS
154
149
151
141
156
157
111
TO MANUAL RELEASE

FIG. 20

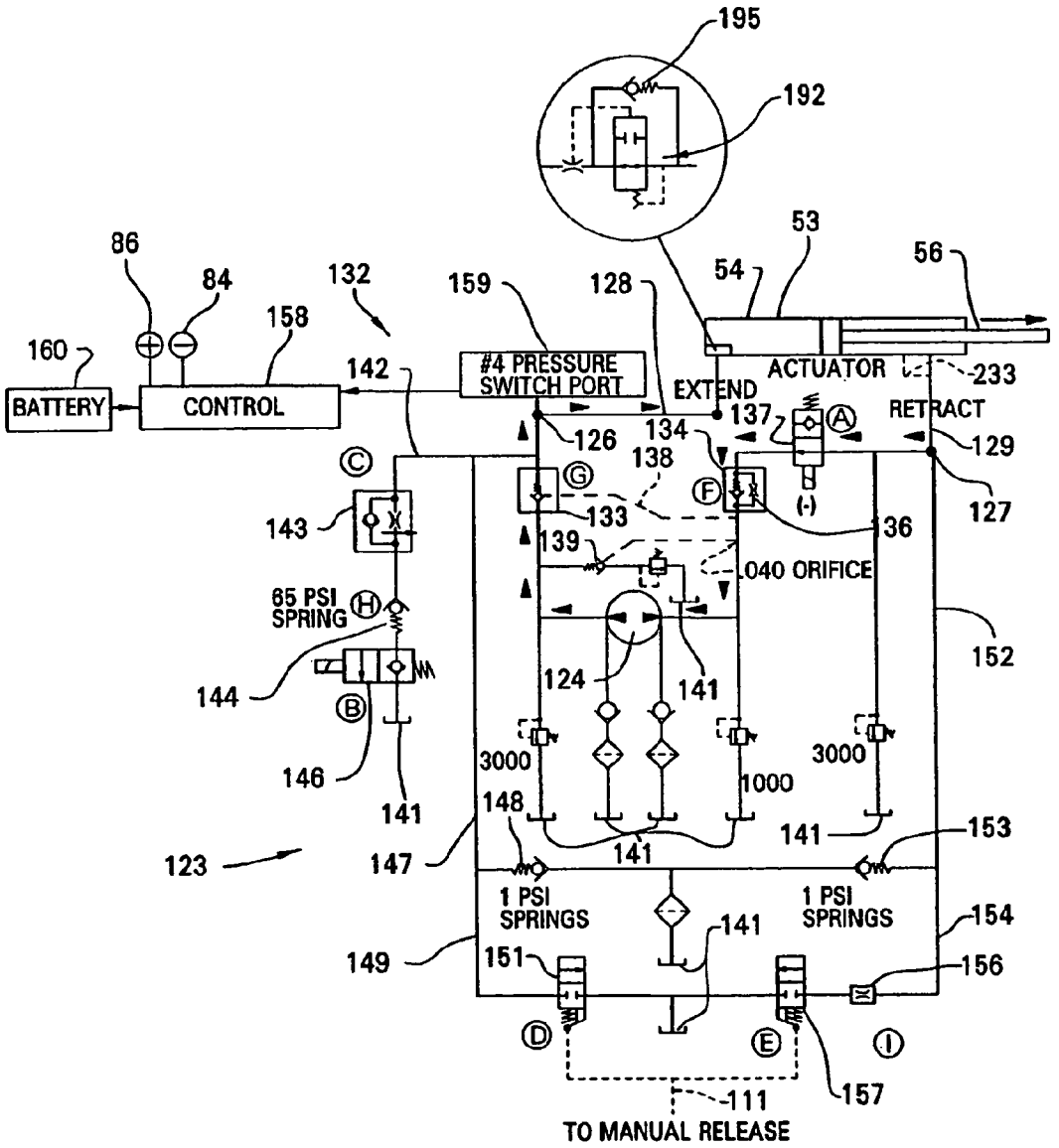
195
192
53
54
56
86
84
132
159
128
158
160
142
#4 PRESSURE SWITCH PORT
ACTUATOR
233
BATTERY
CONTROL
EXTEND
137
RETRACT
126
134
129
138
127
143
133
136
139
.040 ORIFICE
65 PSI SPRING
152
144
124
141
146
3000
1000
3000
148
141
153
123
147
141
1 PSI SPRINGS
1 PSI SPRINGS
154
149
151
141
156
157
111
TO MANUAL RELEASE

FIG. 21

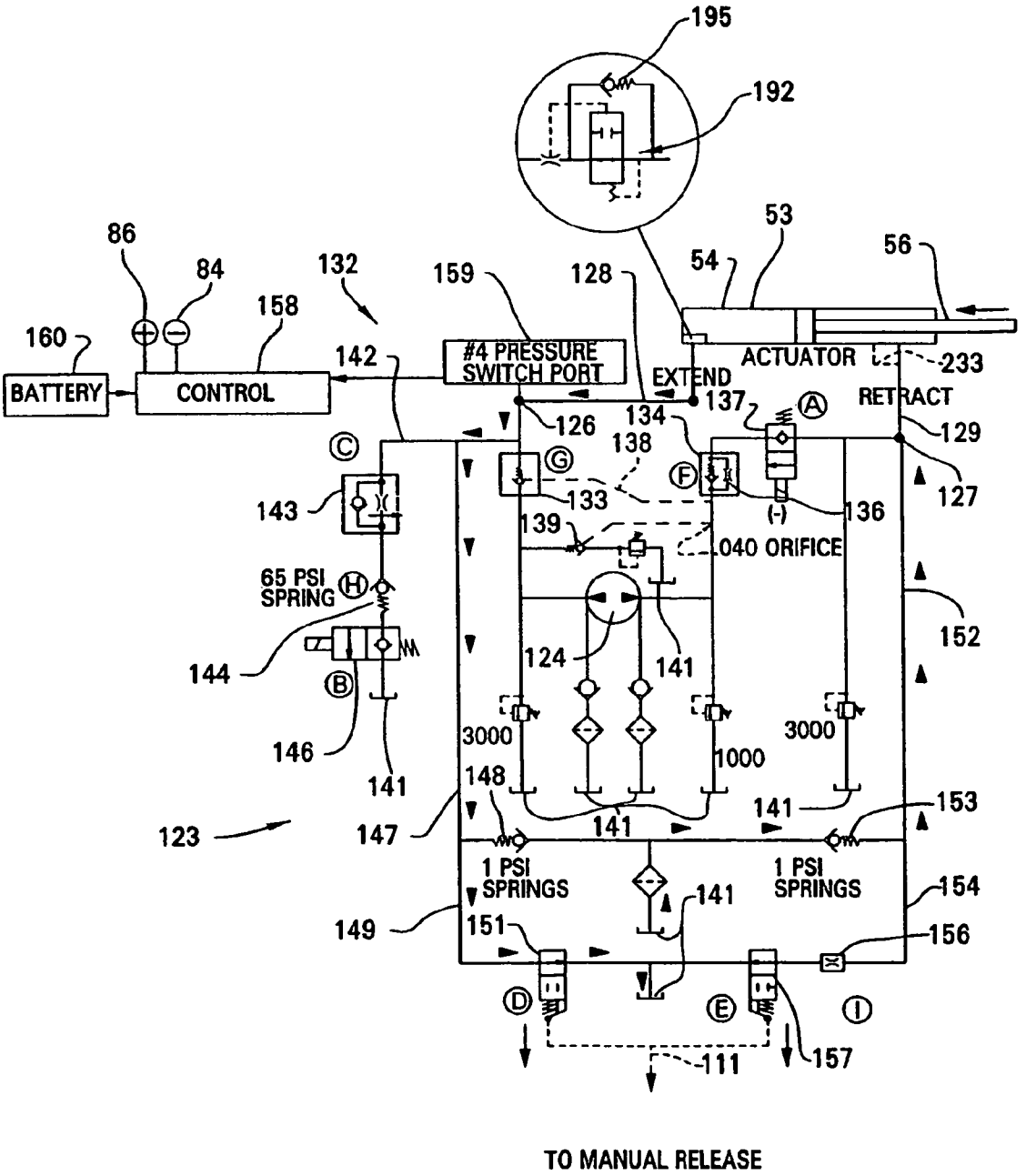
195
192
53
54
56
86
84
132
159
128
158
160
142
#4 PRESSURE SWITCH PORT
ACTUATOR
233
BATTERY
CONTROL
EXTEND
137
RETRACT
126
134
129
138
127
143
133
136
139
040 ORIFICE
65 PSI SPRING
152
144
124
141
146
3000
1000
3000
148
141
153
123
147
141
1 PSI SPRINGS
1 PSI SPRINGS
154
149
151
141
156
157
111
TO MANUAL RELEASE

FIG. 22

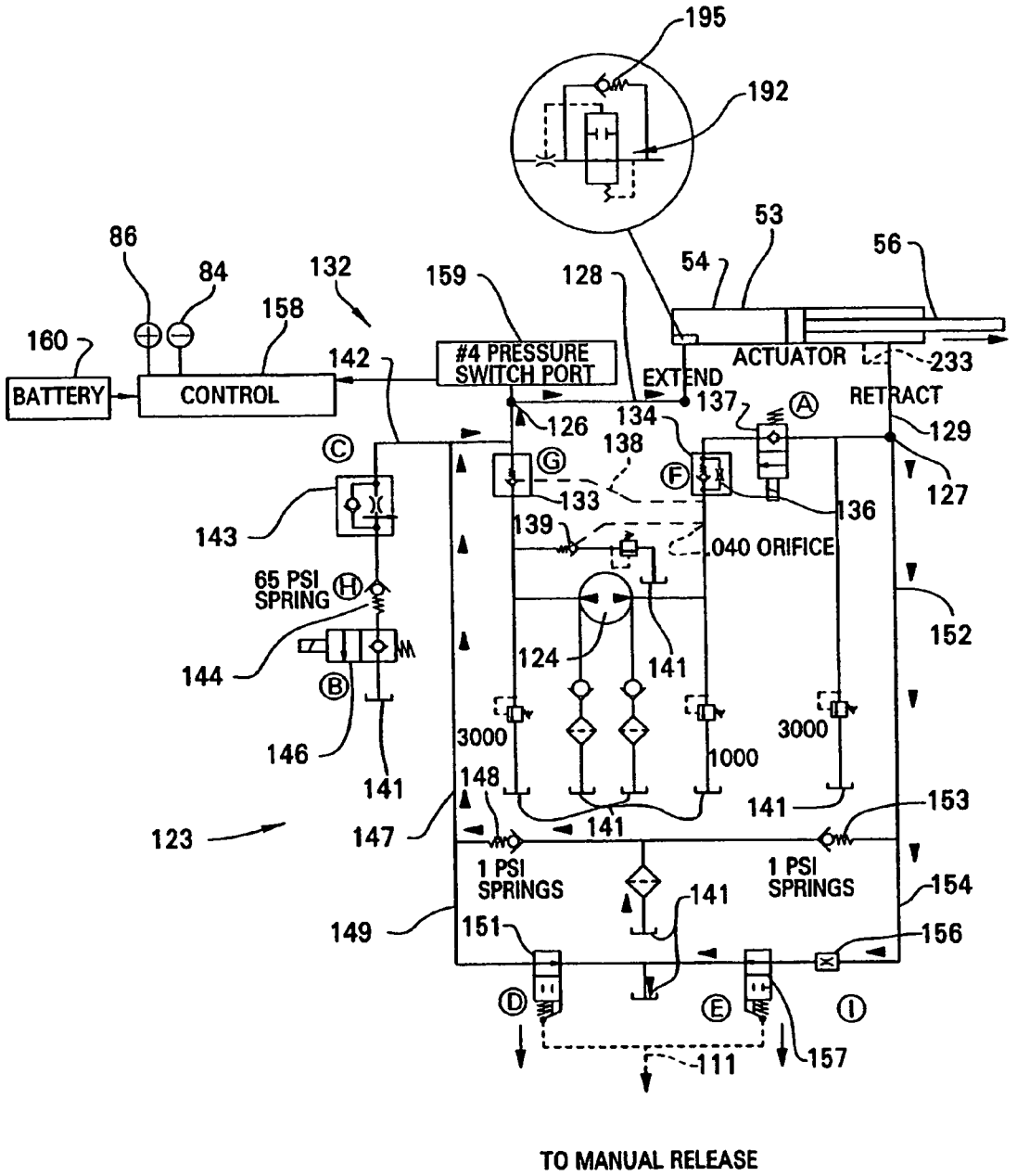
195
192
53
54
56
86
84
132
159
128
158
160
142
#4 PRESSURE SWITCH PORT
ACTUATOR
233
BATTERY
CONTROL
EXTEND
137
RETRACT
126
134
129
138
127
133
136
143
139
.040 ORIFICE
65 PSI SPRING
152
124
141
144
146
3000
1000
3000
148
141
153
123
147
141
1 PSI SPRINGS
1 PSI SPRINGS
154
149
151
156
157
111
TO MANUAL RELEASE

FIG. 23

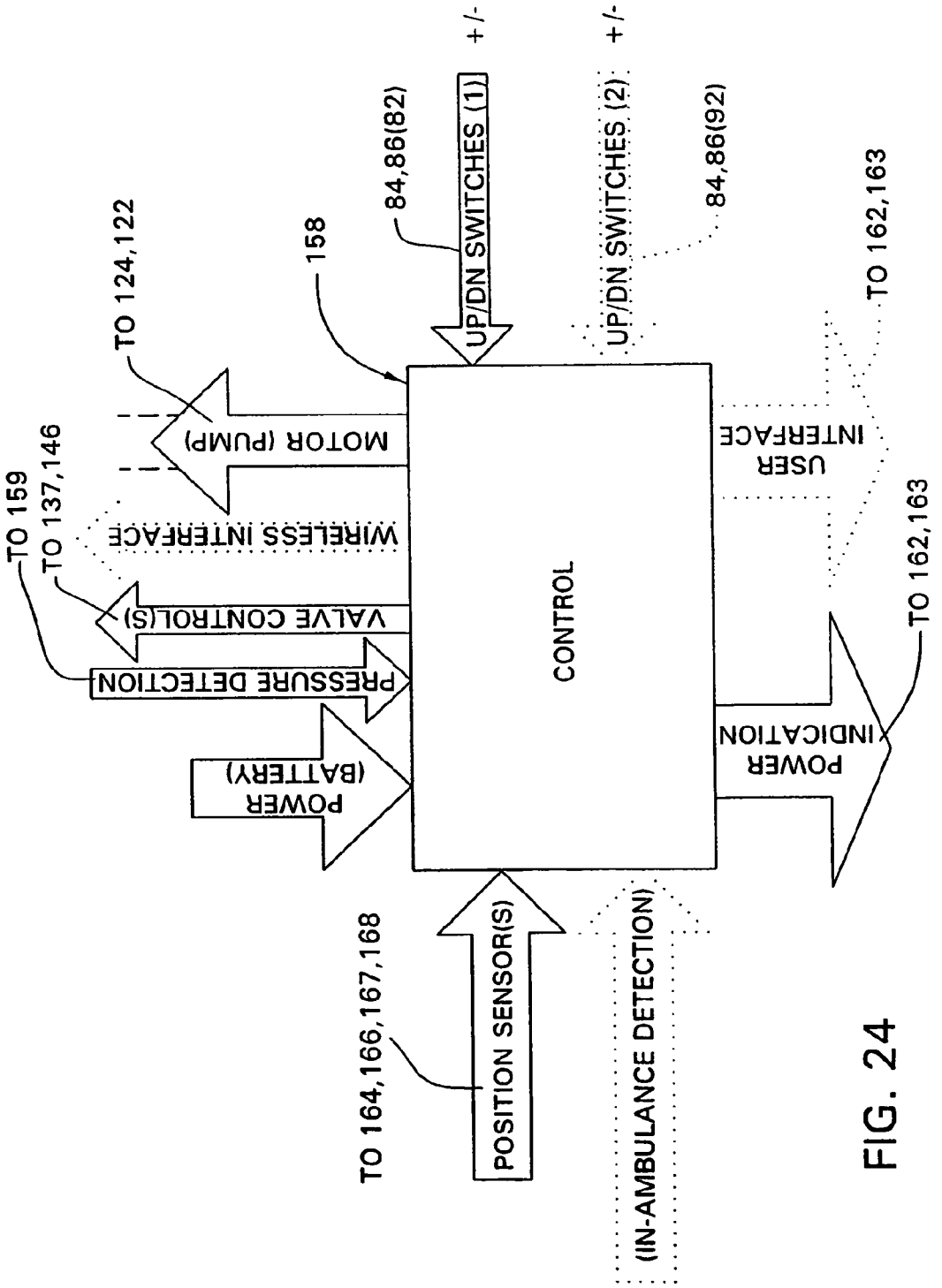
TO 124,122
158
84,86(82)
UP/DN SWITCHES (1)
+/-
UP/DN SWITCHES (2)
+/-
84,86(92)
TO 162,163
MOTOR (PUMP)
USER INTERFACE
TO 159
TO 137,146
WIRELESS INTERFACE
VALVE CONTROL(S)
CONTROL
PRESSURE DETECTION
POWER (BATTERY)
POWER INDICATION
TO 162,163
TO 164,166,167,168
POSITION SENSOR(S)
(IN-AMBULANCE DETECTION)

FIG. 24

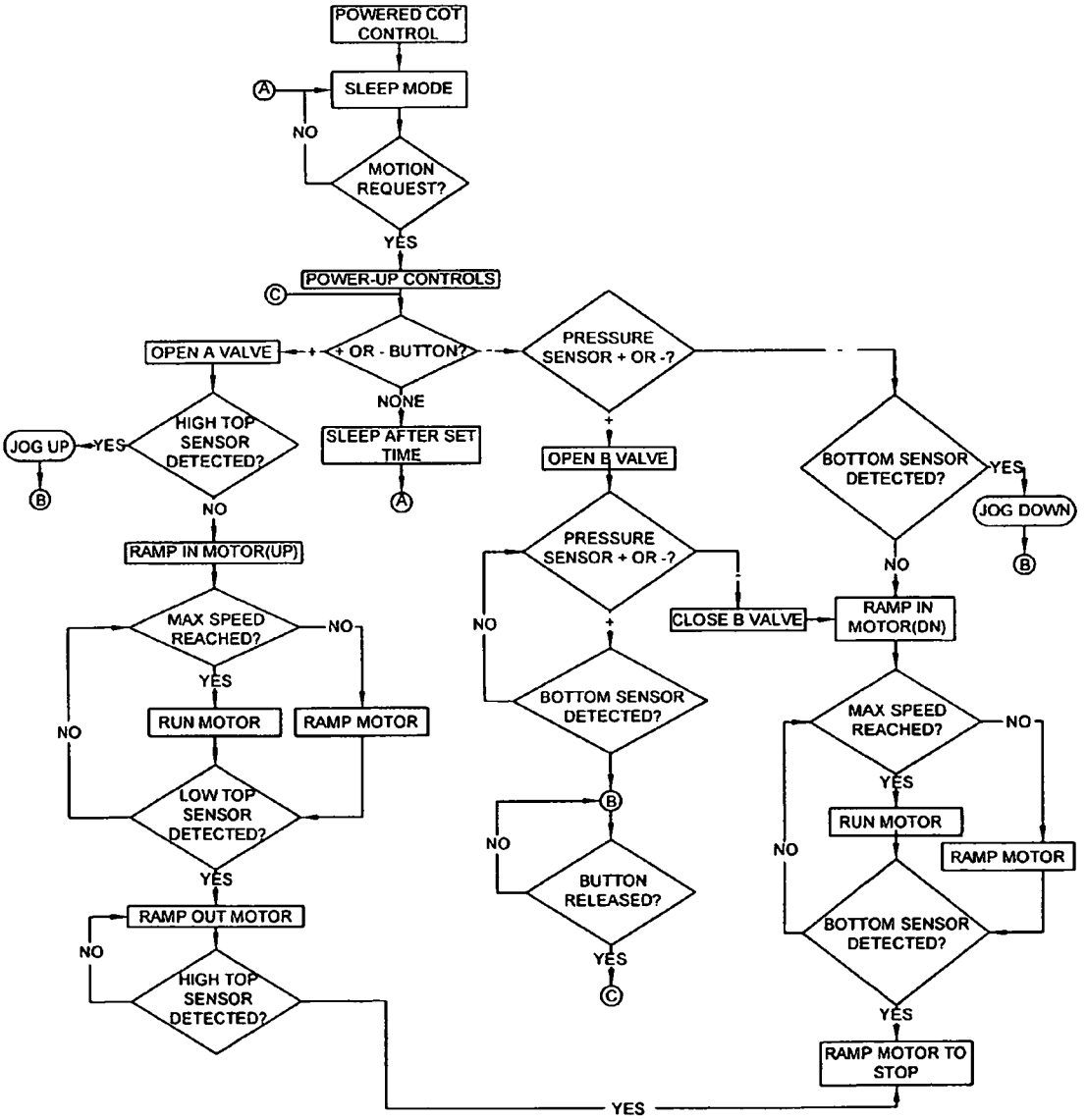
POWERED COT CONTROL
SLEEP MODE
A
NO
MOTION REQUEST?
YES
POWER-UP CONTROLS
C
+ OR - BUTTON?
OPEN A VALVE
NONE
SLEEP AFTER SET TIME
A
HIGH TOP SENSOR DETECTED?
JOG UP
YES
B
NO
RAMP IN MOTOR(UP)
MAX SPEED REACHED?
NO
YES
RUN MOTOR
RAMP MOTOR
NO
LOW TOP SENSOR DETECTED?
YES
RAMP OUT MOTOR
NO
HIGH TOP SENSOR DETECTED?
YES
PRESSURE SENSOR + OR -?
OPEN B VALVE
PRESSURE SENSOR + OR -?
NO
CLOSE B VALVE
BOTTOM SENSOR DETECTED?
B
NO
BUTTON RELEASED?
YES
C
BOTTOM SENSOR DETECTED?
YES
JOG DOWN
B
NO
RAMP IN MOTOR(DN)
MAX SPEED REACHED?
NO
YES
RUN MOTOR
RAMP MOTOR
NO
BOTTOM SENSOR DETECTED?
YES
RAMP MOTOR TO STOP

FIG. 25

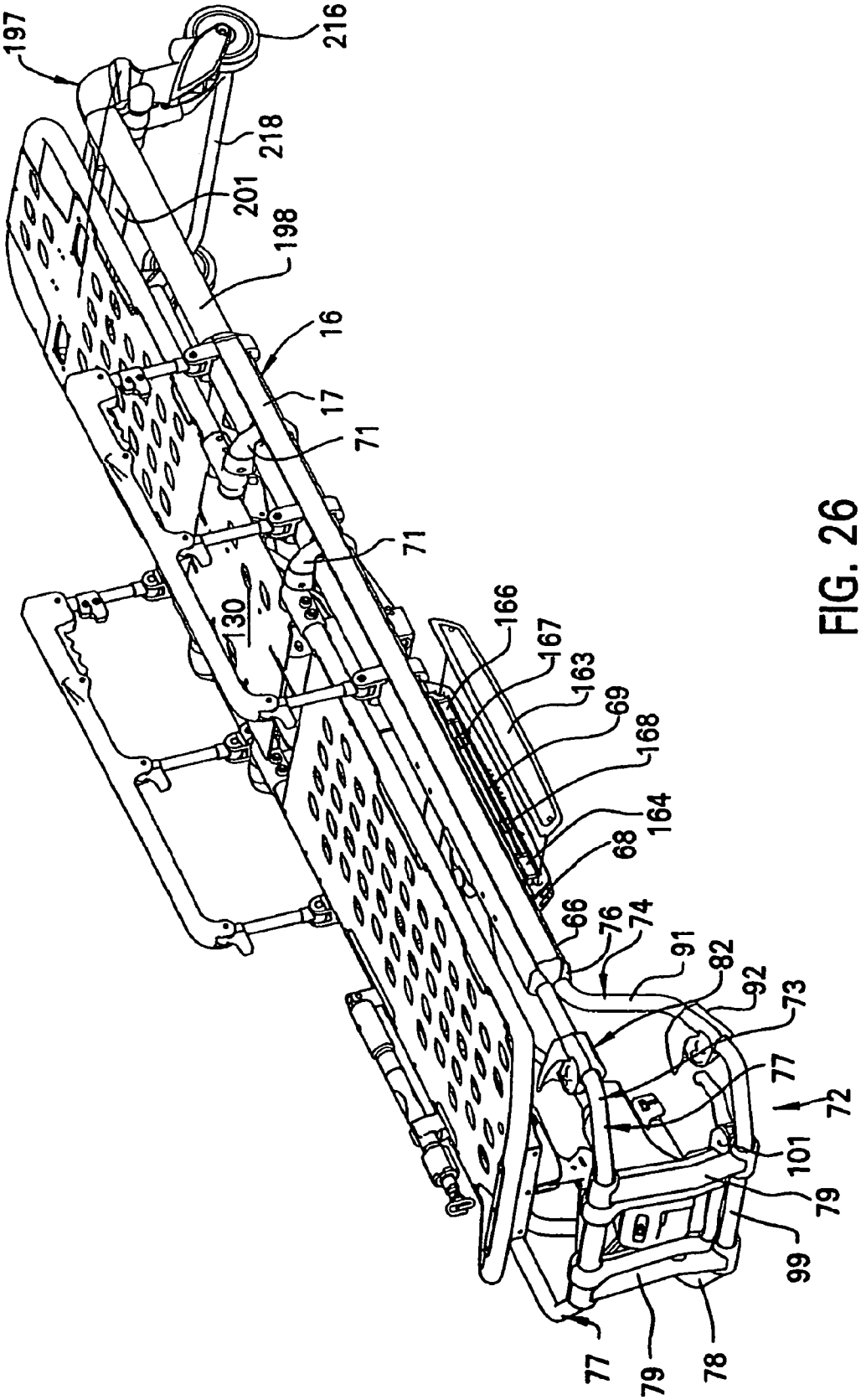
197
216
218
201
198
16
17
71
71
130
166
167
163
69
168
164
68
66
76
74
91
82
92
73
77
72
101
79
99
77
79
78

FIG. 26

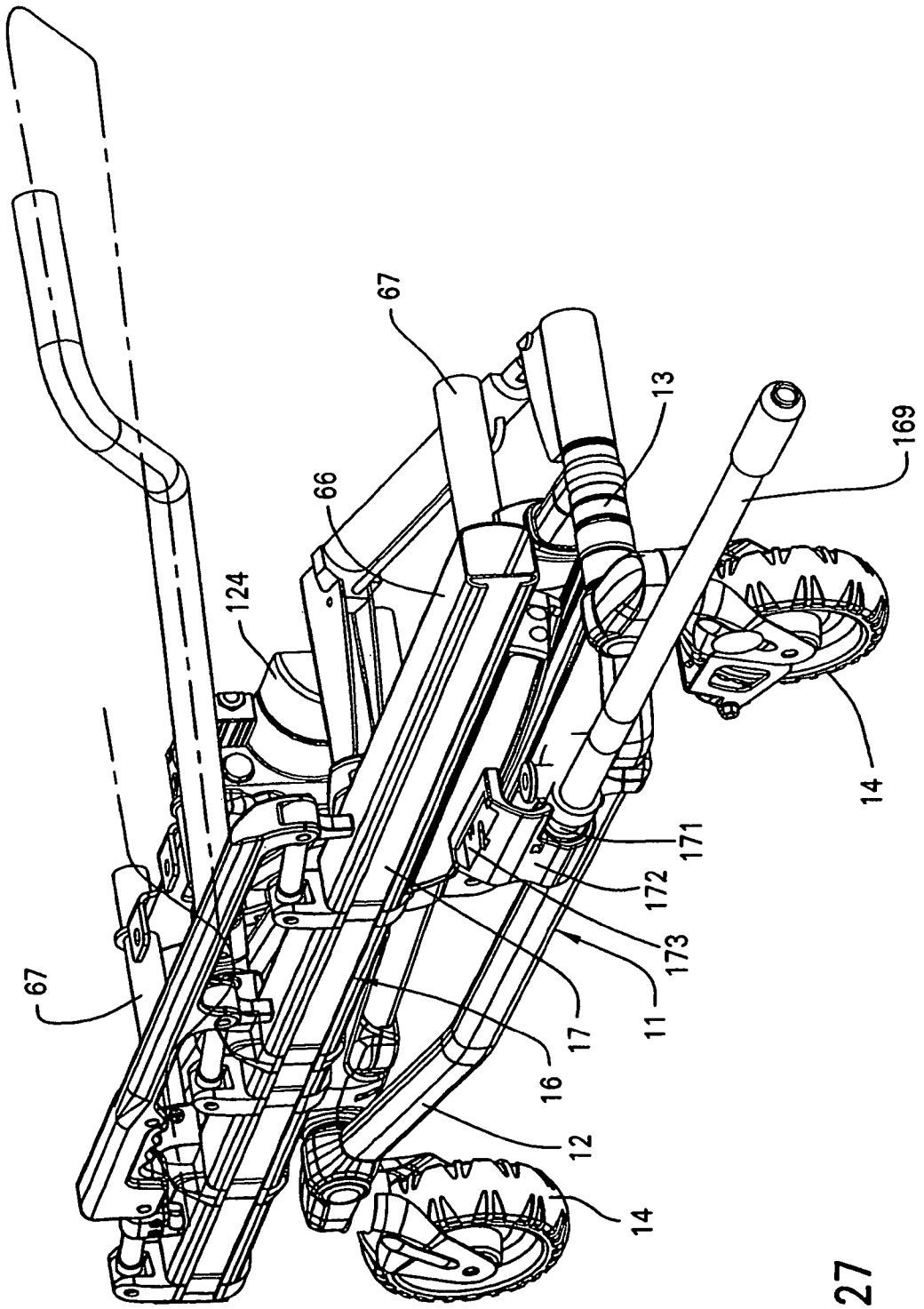

FIG. 27

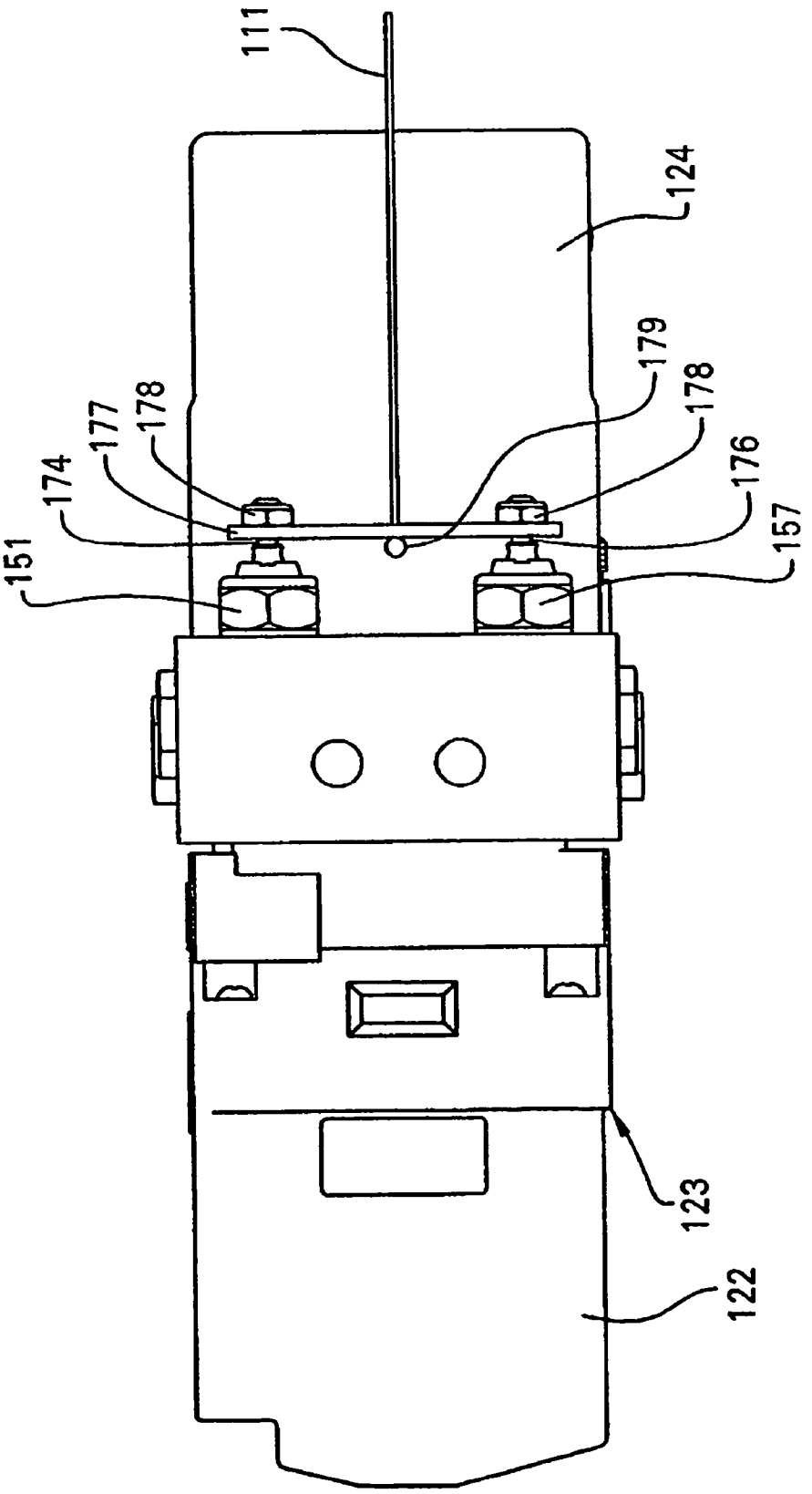

FIG. 28

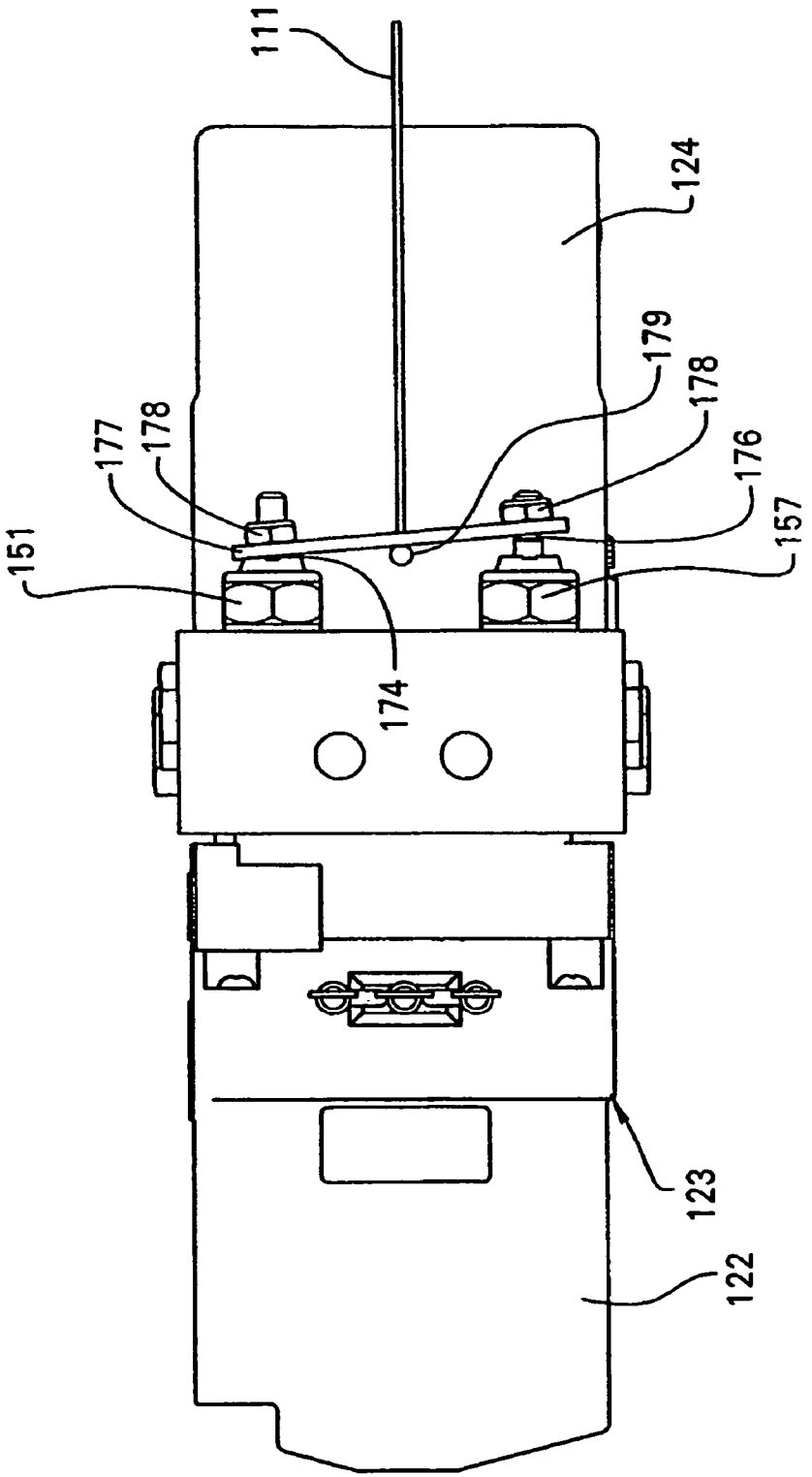

FIG. 29

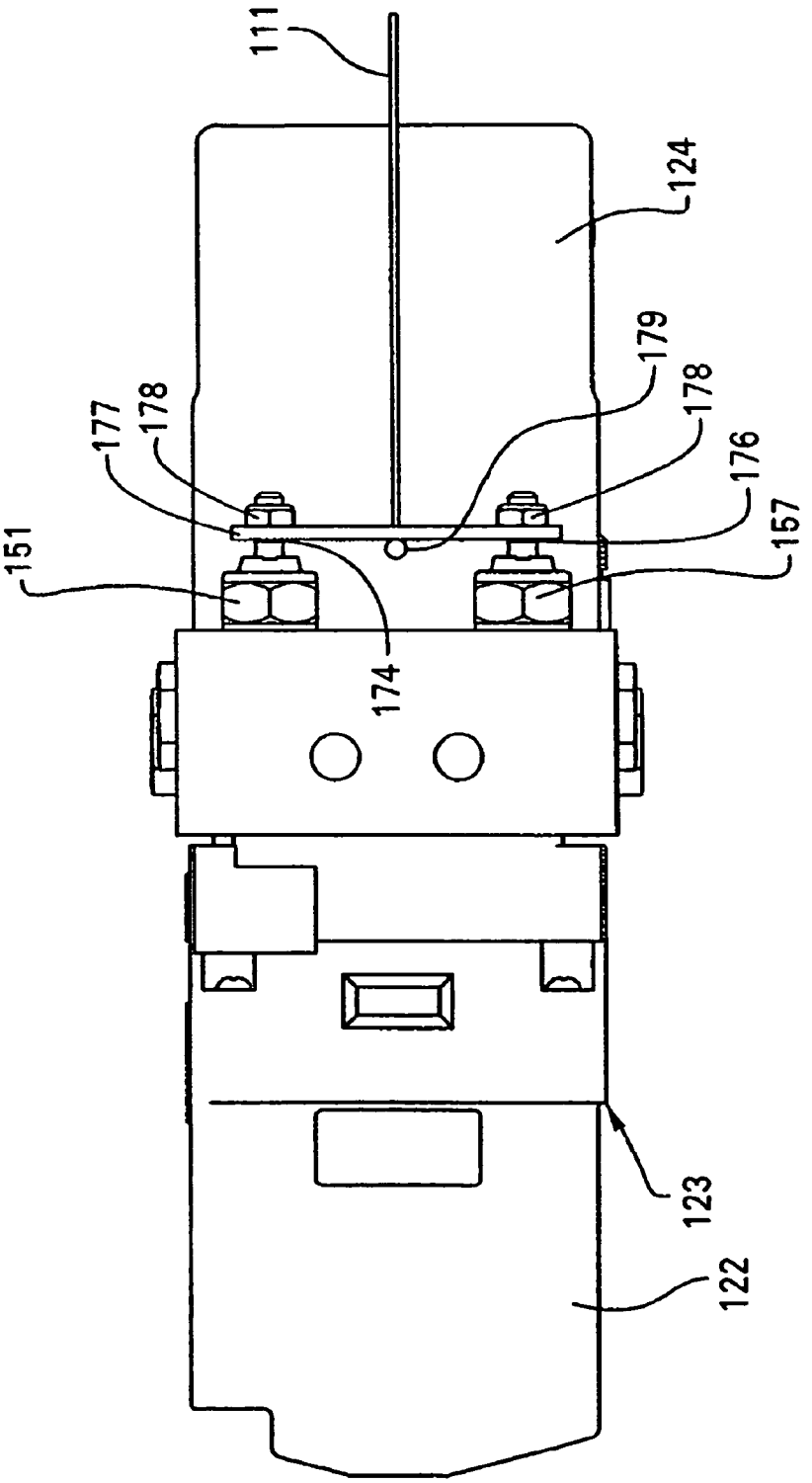

FIG. 30

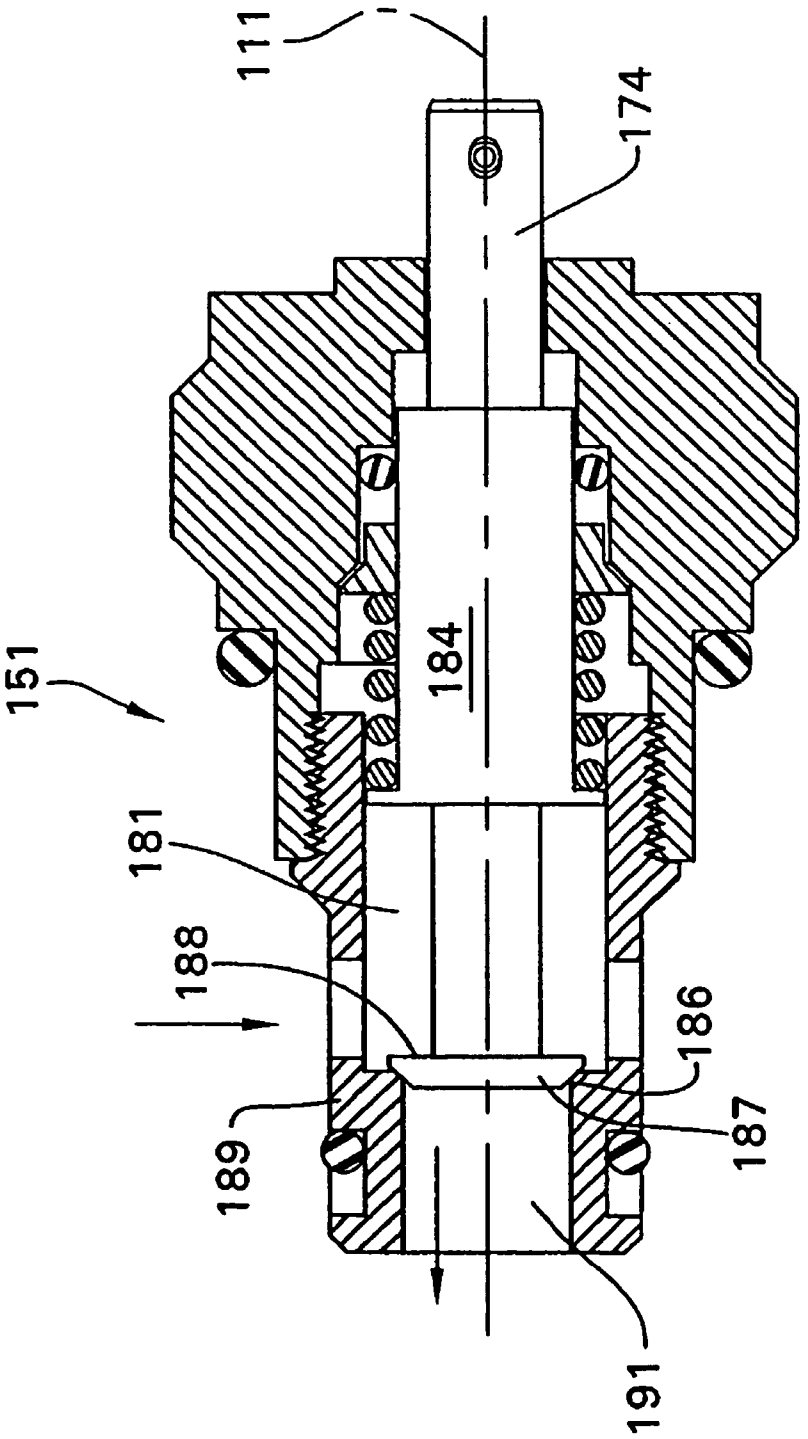

FIG. 31

FIG. 32

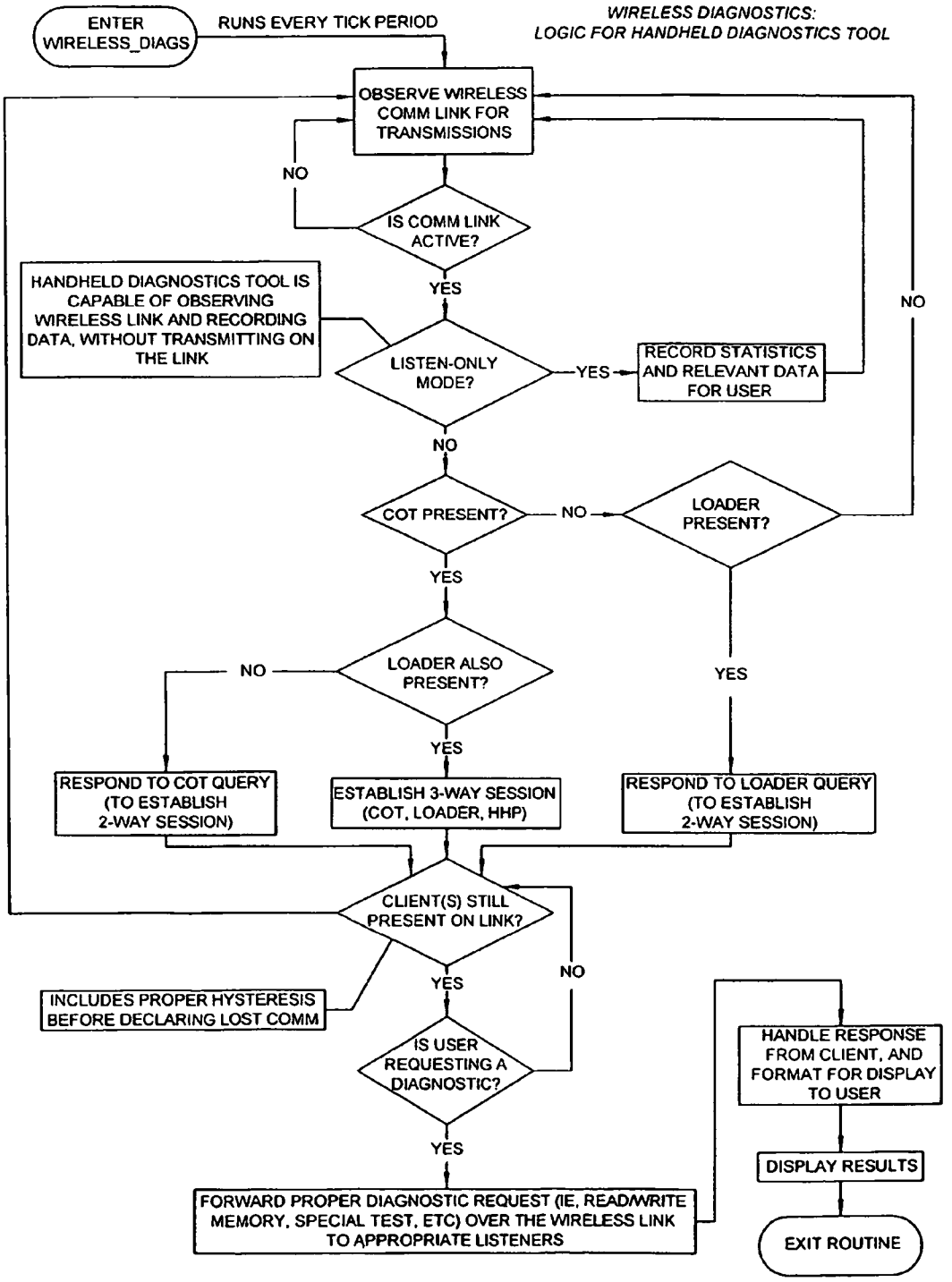
ENTER WIRELESS_DIAGS
RUNS EVERY TICK PERIOD
WIRELESS DIAGNOSTICS: LOGIC FOR HANDHELD DIAGNOSTICS TOOL
OBSERVE WIRELESS COMM LINK FOR TRANSMISSIONS
NO
IS COMM LINK ACTIVE?
YES
HANDHELD DIAGNOSTICS TOOL IS CAPABLE OF OBSERVING WIRELESS LINK AND RECORDING DATA, WITHOUT TRANSMITTING ON THE LINK
LISTEN-ONLY MODE?
YES
RECORD STATISTICS AND RELEVANT DATA FOR USER
NO
NO
COT PRESENT?
NO
LOADER PRESENT?
YES
LOADER ALSO PRESENT?
NO
YES
YES
RESPOND TO COT QUERY (TO ESTABLISH 2-WAY SESSION)
ESTABLISH 3-WAY SESSION (COT, LOADER, HHP)
RESPOND TO LOADER QUERY (TO ESTABLISH 2-WAY SESSION)
CLIENT(S) STILL PRESENT ON LINK?
NO
YES
INCLUDES PROPER HYSTERESIS BEFORE DECLARING LOST COMM
IS USER REQUESTING A DIAGNOSTIC?
YES
FORWARD PROPER DIAGNOSTIC REQUEST (IE, READ/WRITE MEMORY, SPECIAL TEST, ETC) OVER THE WIRELESS LINK TO APPROPRIATE LISTENERS
HANDLE RESPONSE FROM CLIENT, AND FORMAT FOR DISPLAY TO USER
DISPLAY RESULTS
EXIT ROUTINE

FIG. 33

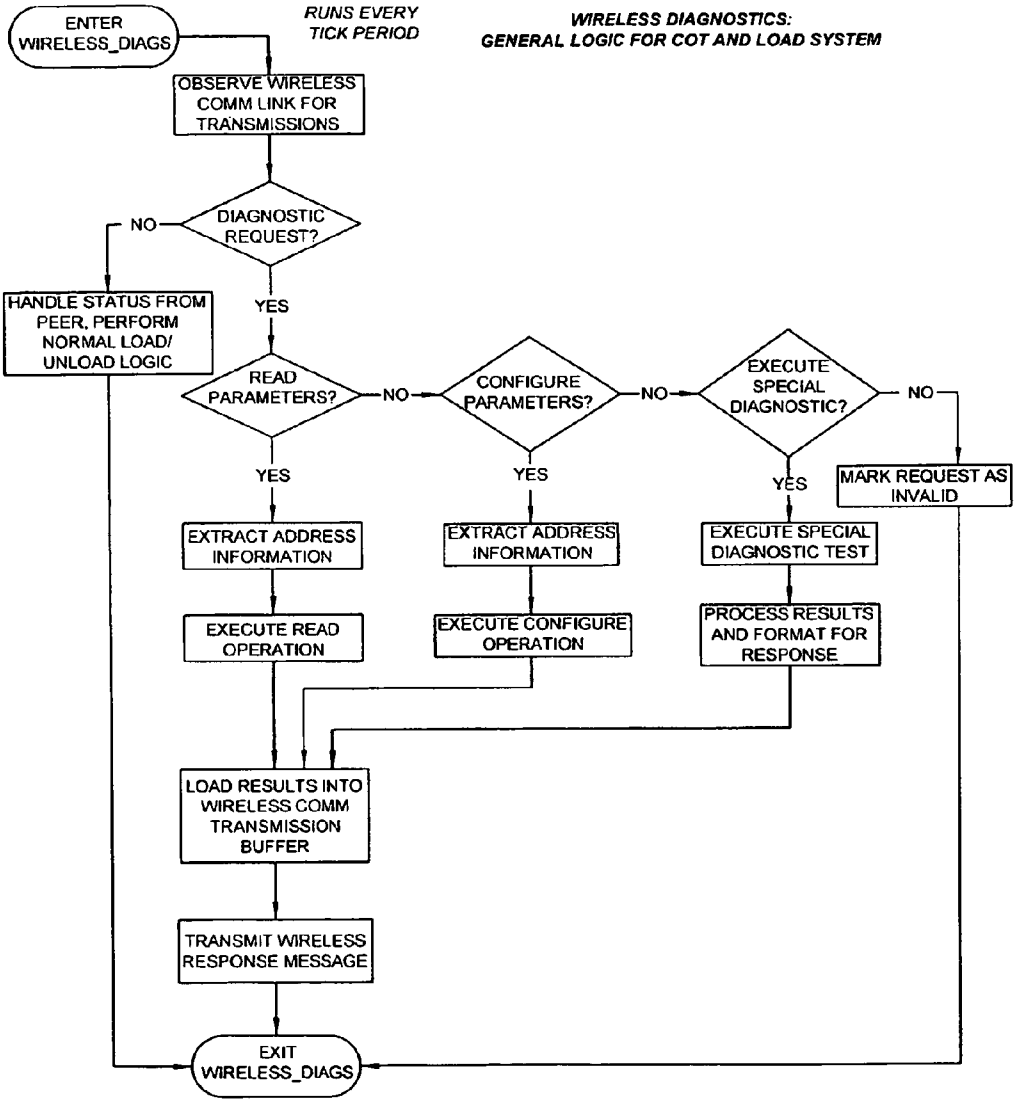
ENTER WIRELESS_DIAGS
RUNS EVERY TICK PERIOD
WIRELESS DIAGNOSTICS: GENERAL LOGIC FOR COT AND LOAD SYSTEM
OBSERVE WIRELESS COMM LINK FOR TRANSMISSIONS
DIAGNOSTIC REQUEST?
NO
HANDLE STATUS FROM PEER, PERFORM NORMAL LOAD/ UNLOAD LOGIC
YES
READ PARAMETERS?
NO
CONFIGURE PARAMETERS?
NO
EXECUTE SPECIAL DIAGNOSTIC?
NO
MARK REQUEST AS INVALID
YES
YES
YES
EXTRACT ADDRESS INFORMATION
EXTRACT ADDRESS INFORMATION
EXECUTE SPECIAL DIAGNOSTIC TEST
EXECUTE READ OPERATION
EXECUTE CONFIGURE OPERATION
PROCESS RESULTS AND FORMAT FOR RESPONSE
LOAD RESULTS INTO WIRELESS COMM TRANSMISSION BUFFER
TRANSMIT WIRELESS RESPONSE MESSAGE
EXIT WIRELESS_DIAGS

FIG. 33A

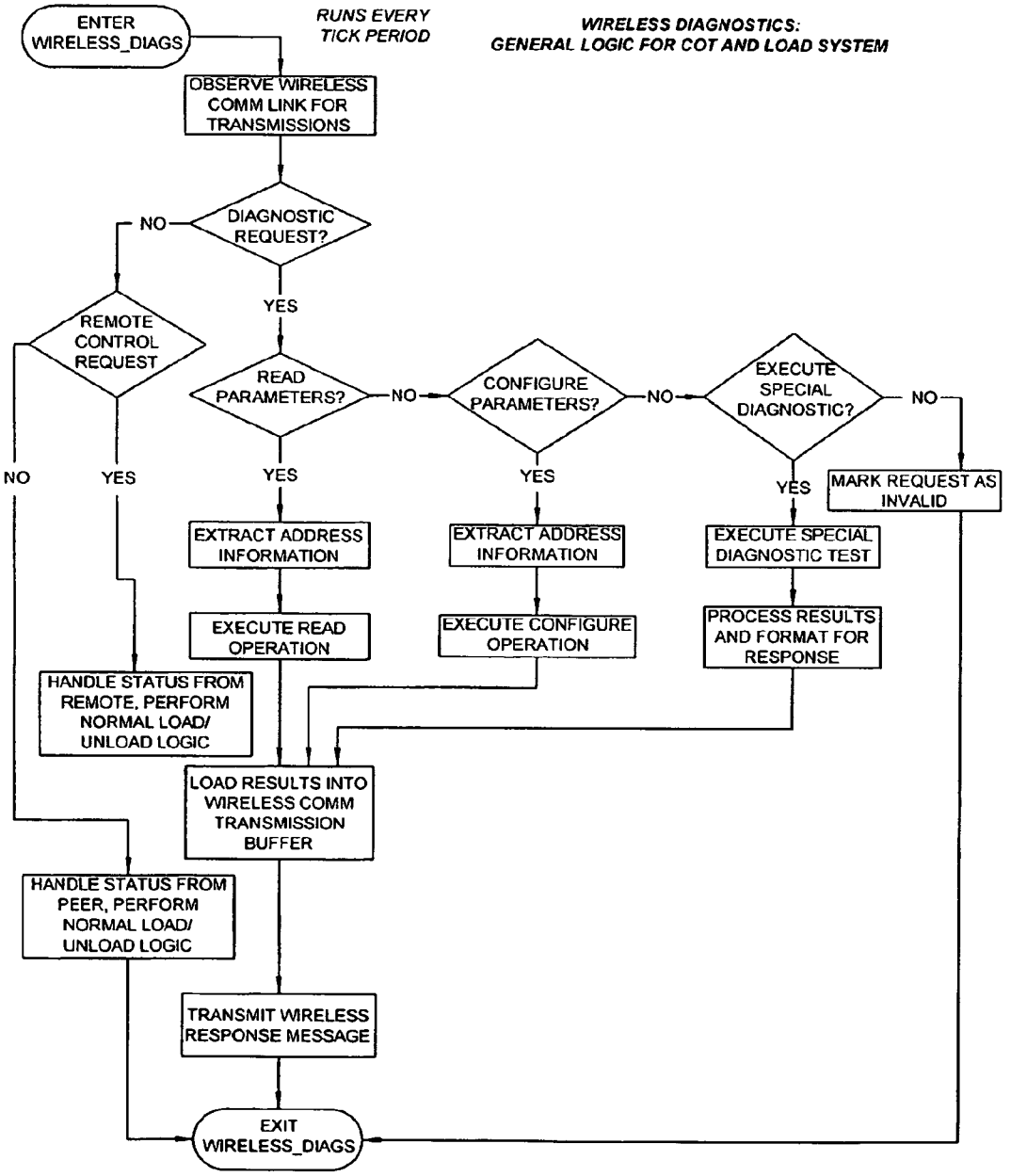
ENTER WIRELESS_DIAGS
RUNS EVERY TICK PERIOD
WIRELESS DIAGNOSTICS: GENERAL LOGIC FOR COT AND LOAD SYSTEM
OBSERVE WIRELESS COMM LINK FOR TRANSMISSIONS
DIAGNOSTIC REQUEST?
NO
YES
REMOTE CONTROL REQUEST
READ PARAMETERS?
NO
CONFIGURE PARAMETERS?
NO
EXECUTE SPECIAL DIAGNOSTIC?
NO
NO
YES
YES
YES
YES
MARK REQUEST AS INVALID
EXTRACT ADDRESS INFORMATION
EXTRACT ADDRESS INFORMATION
EXECUTE SPECIAL DIAGNOSTIC TEST
EXECUTE READ OPERATION
EXECUTE CONFIGURE OPERATION
PROCESS RESULTS AND FORMAT FOR RESPONSE
HANDLE STATUS FROM REMOTE, PERFORM NORMAL LOAD/ UNLOAD LOGIC
LOAD RESULTS INTO WIRELESS COMM TRANSMISSION BUFFER
HANDLE STATUS FROM PEER, PERFORM NORMAL LOAD/ UNLOAD LOGIC
TRANSMIT WIRELESS RESPONSE MESSAGE
EXIT WIRELESS_DIAGS

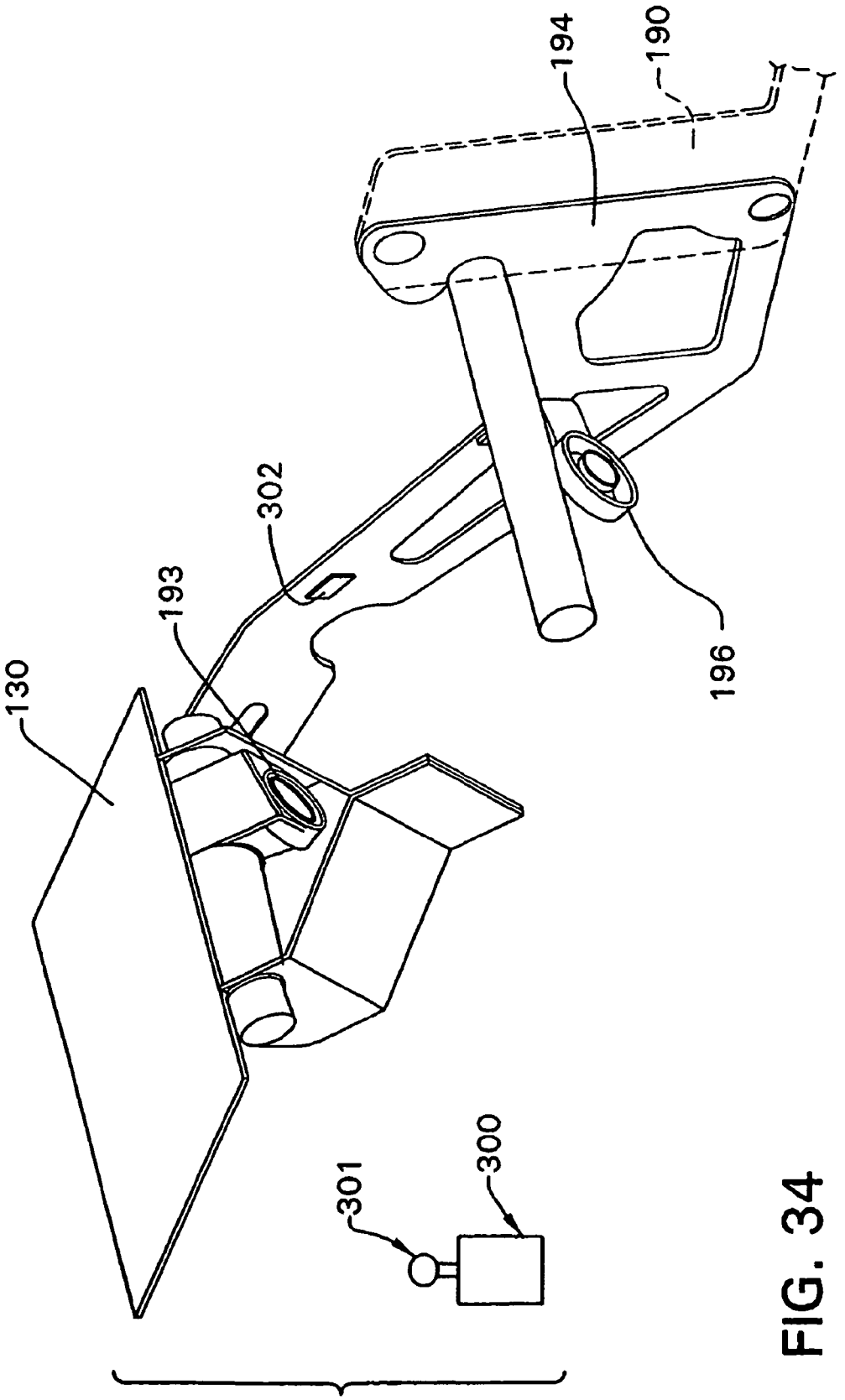

FIG. 34

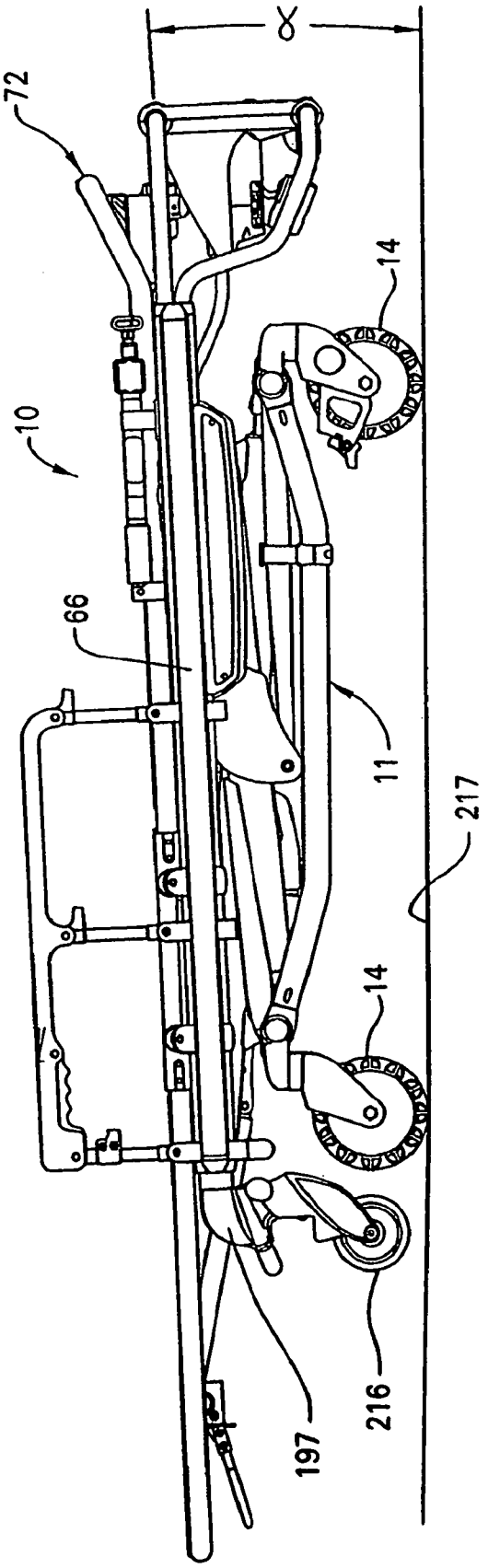

FIG. 35

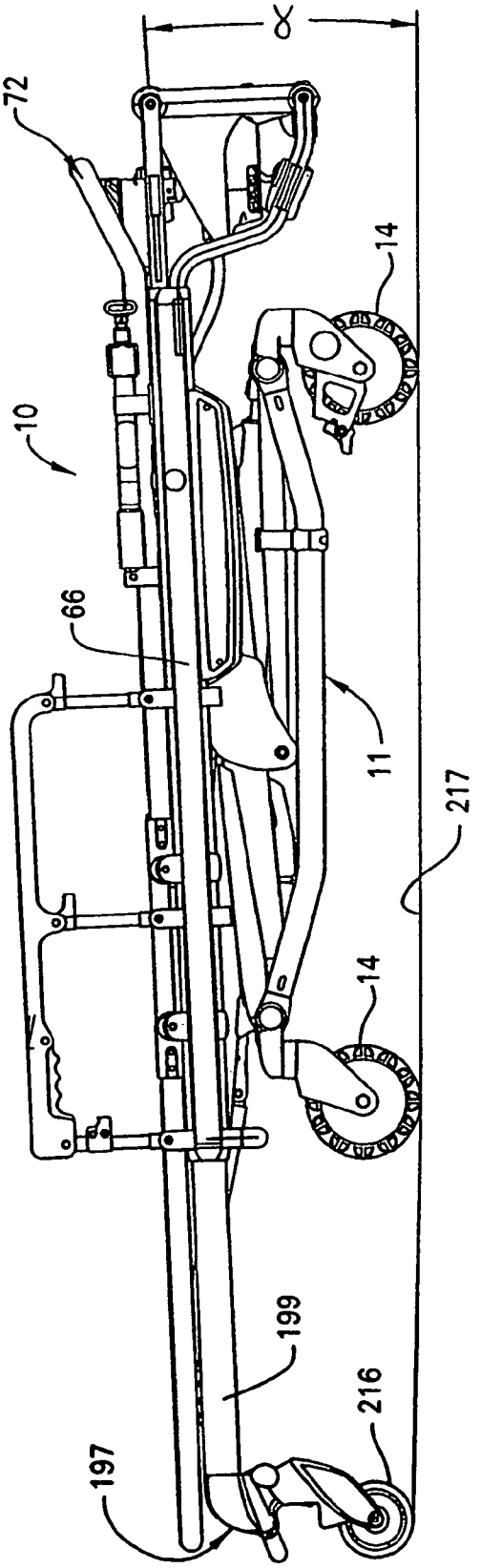

FIG. 36

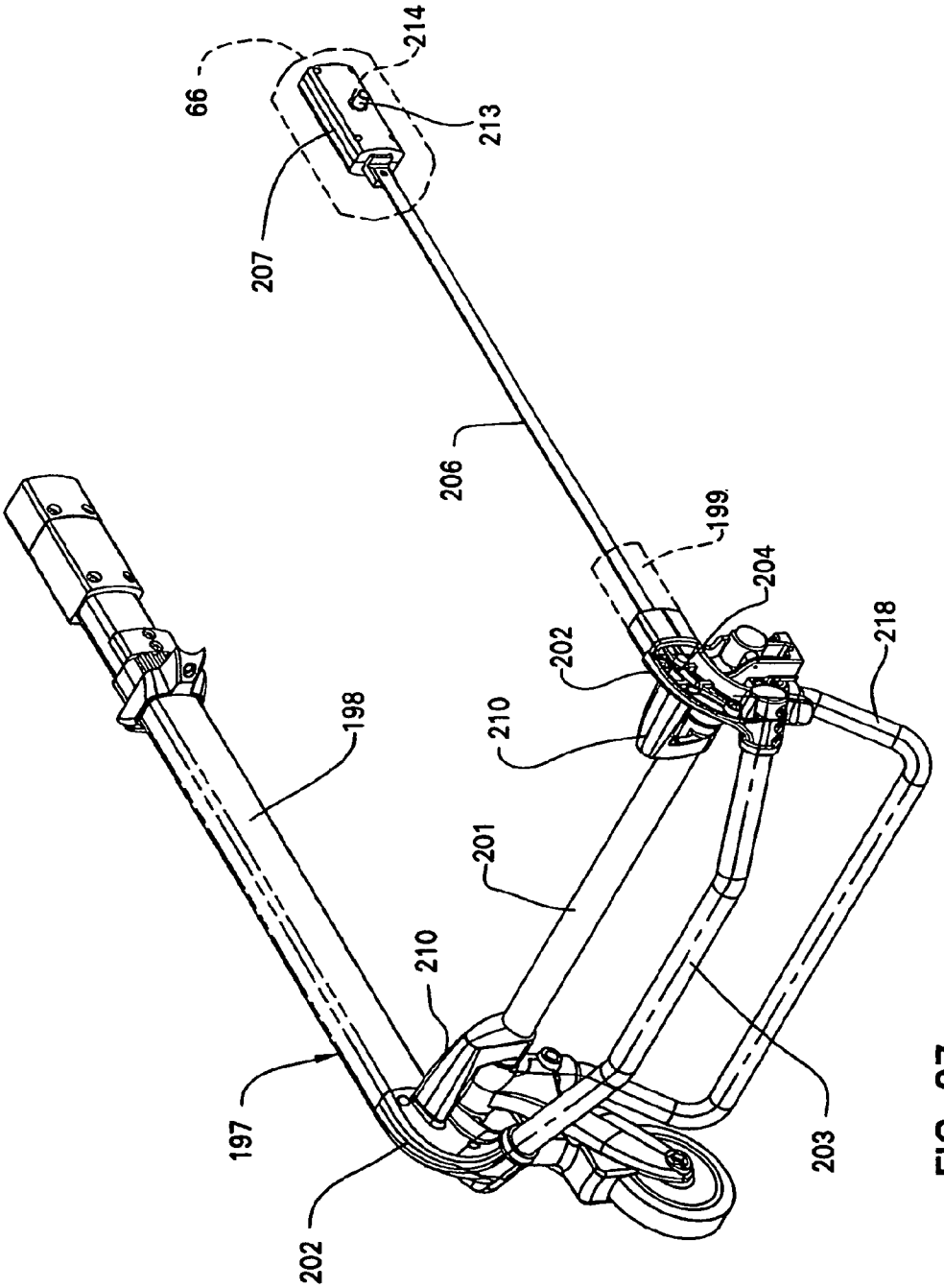

FIG. 37

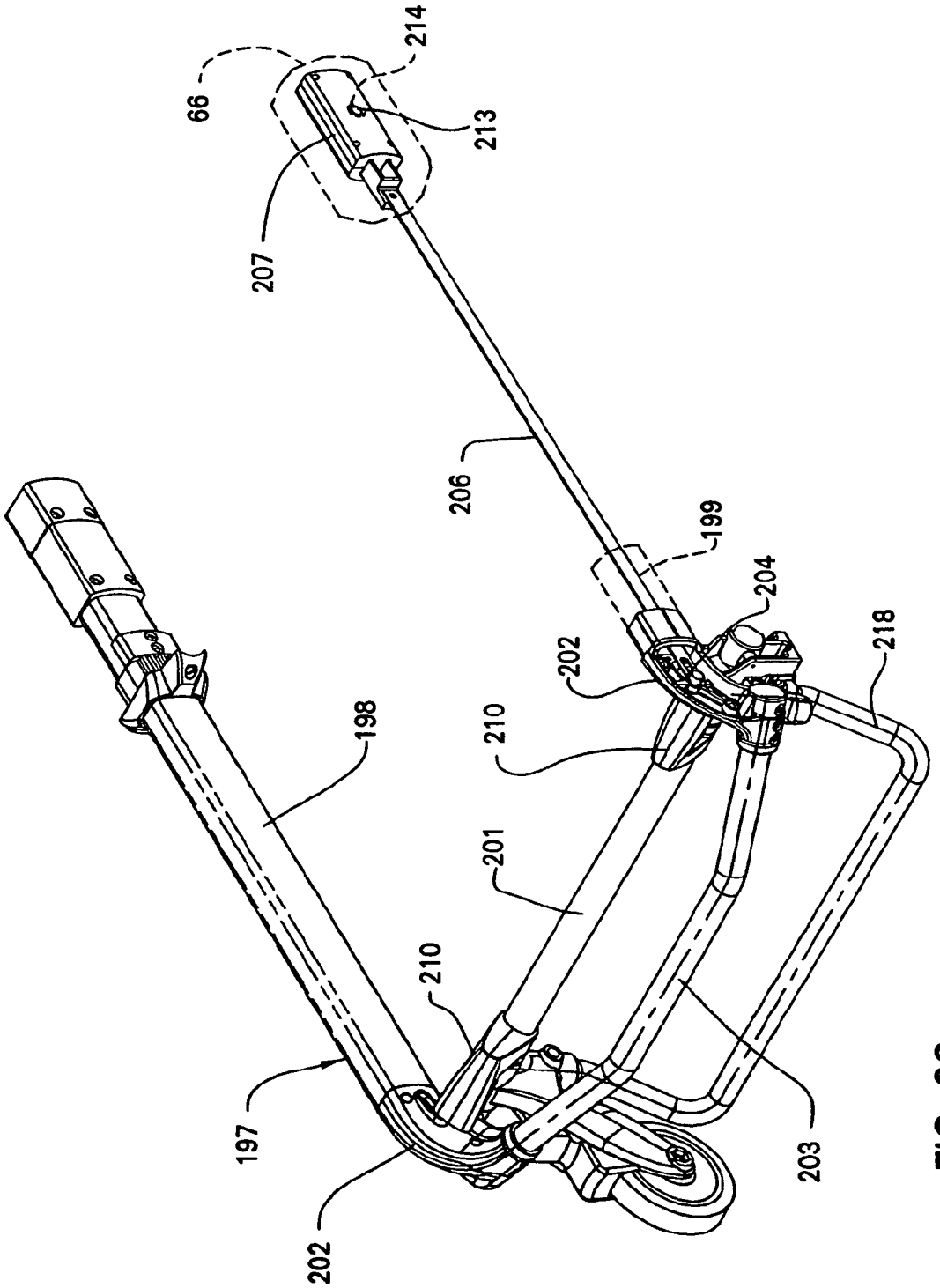

FIG. 38

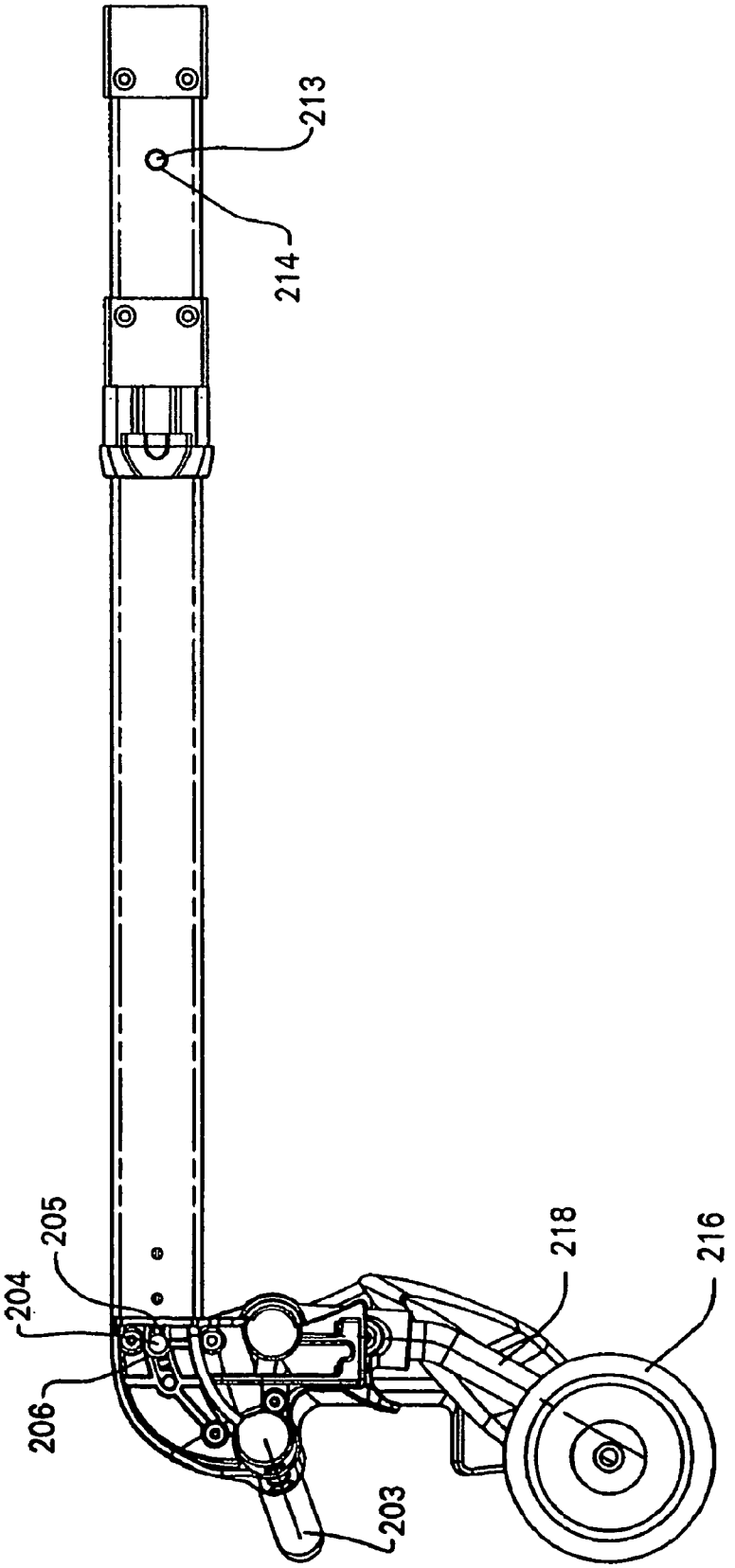

FIG. 39

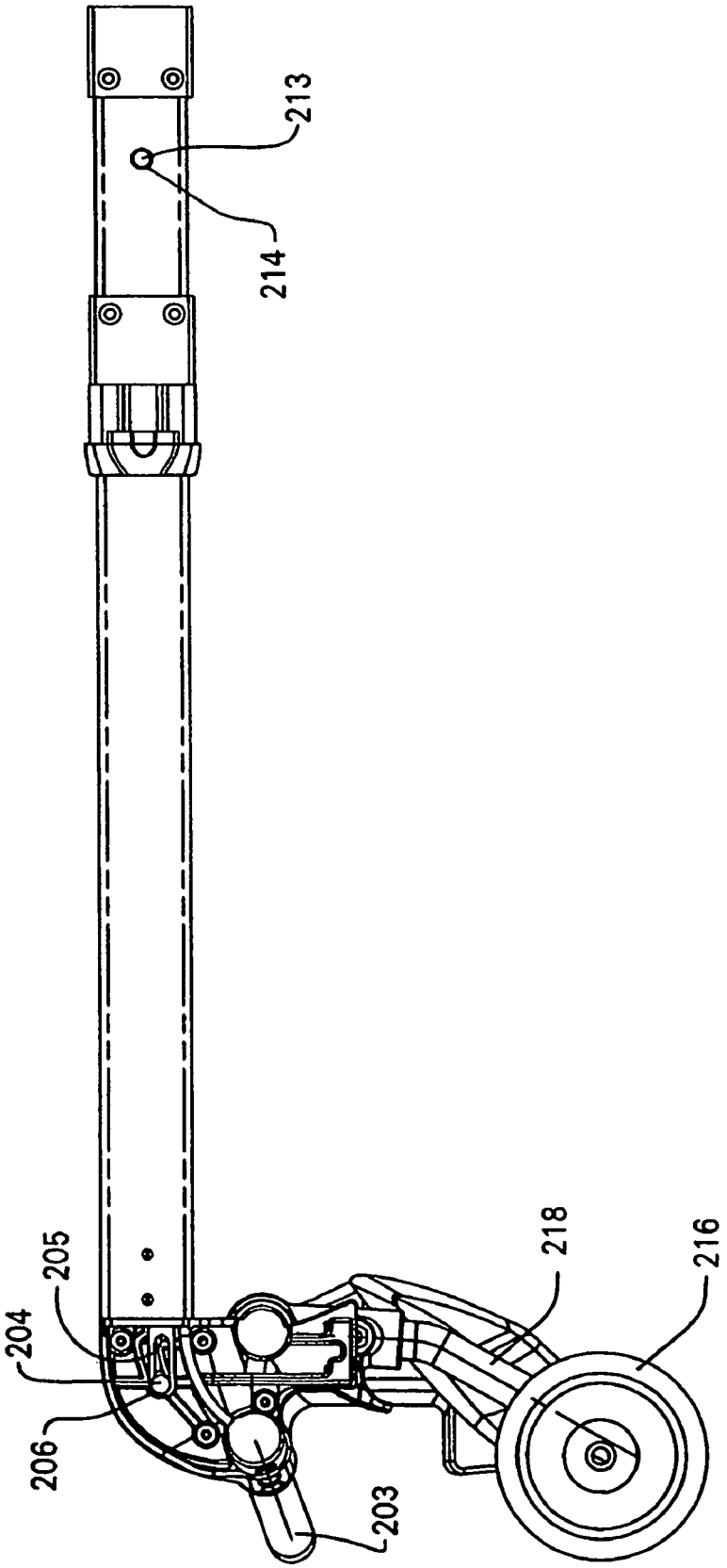

FIG. 40

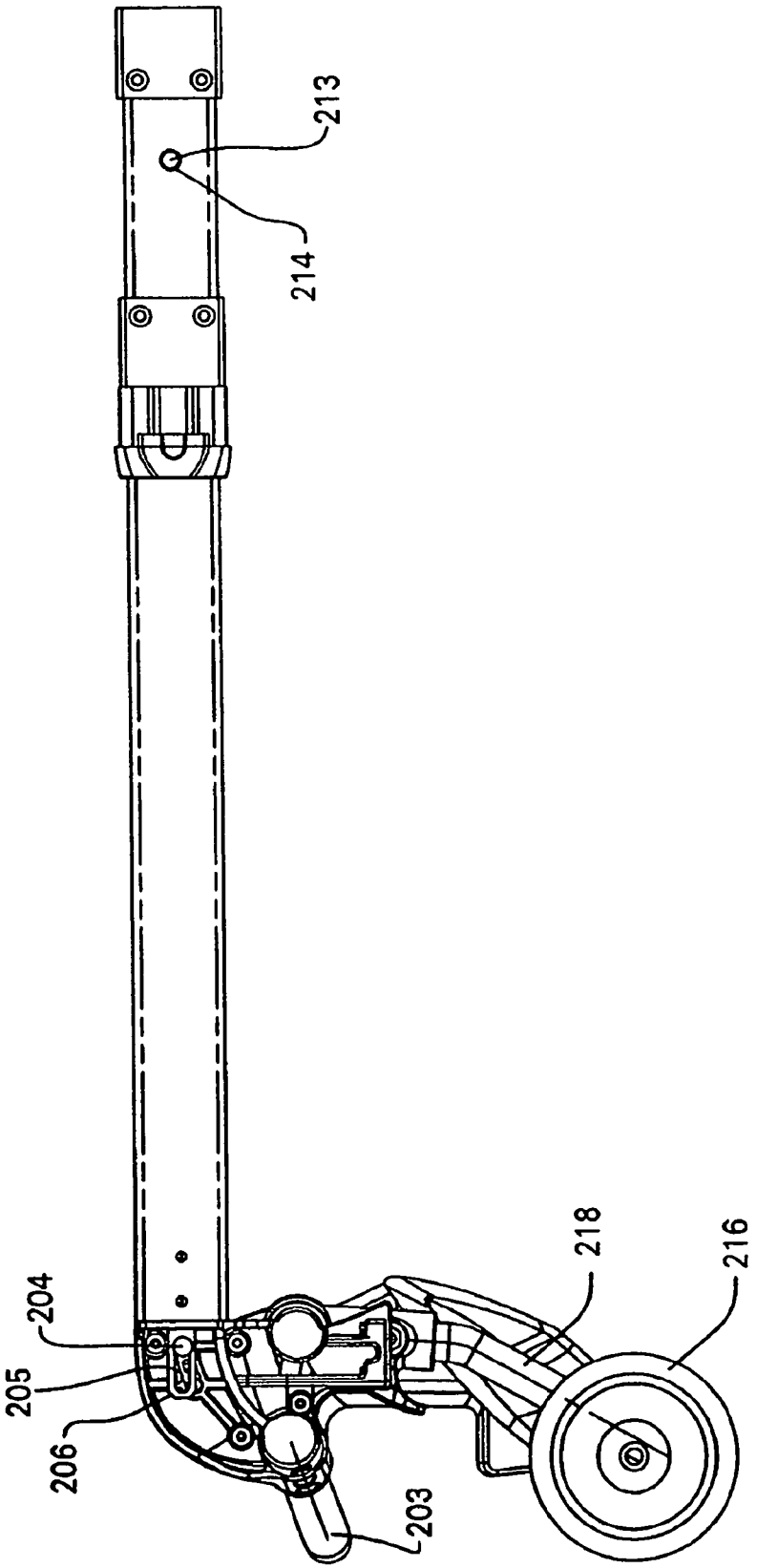

FIG. 41

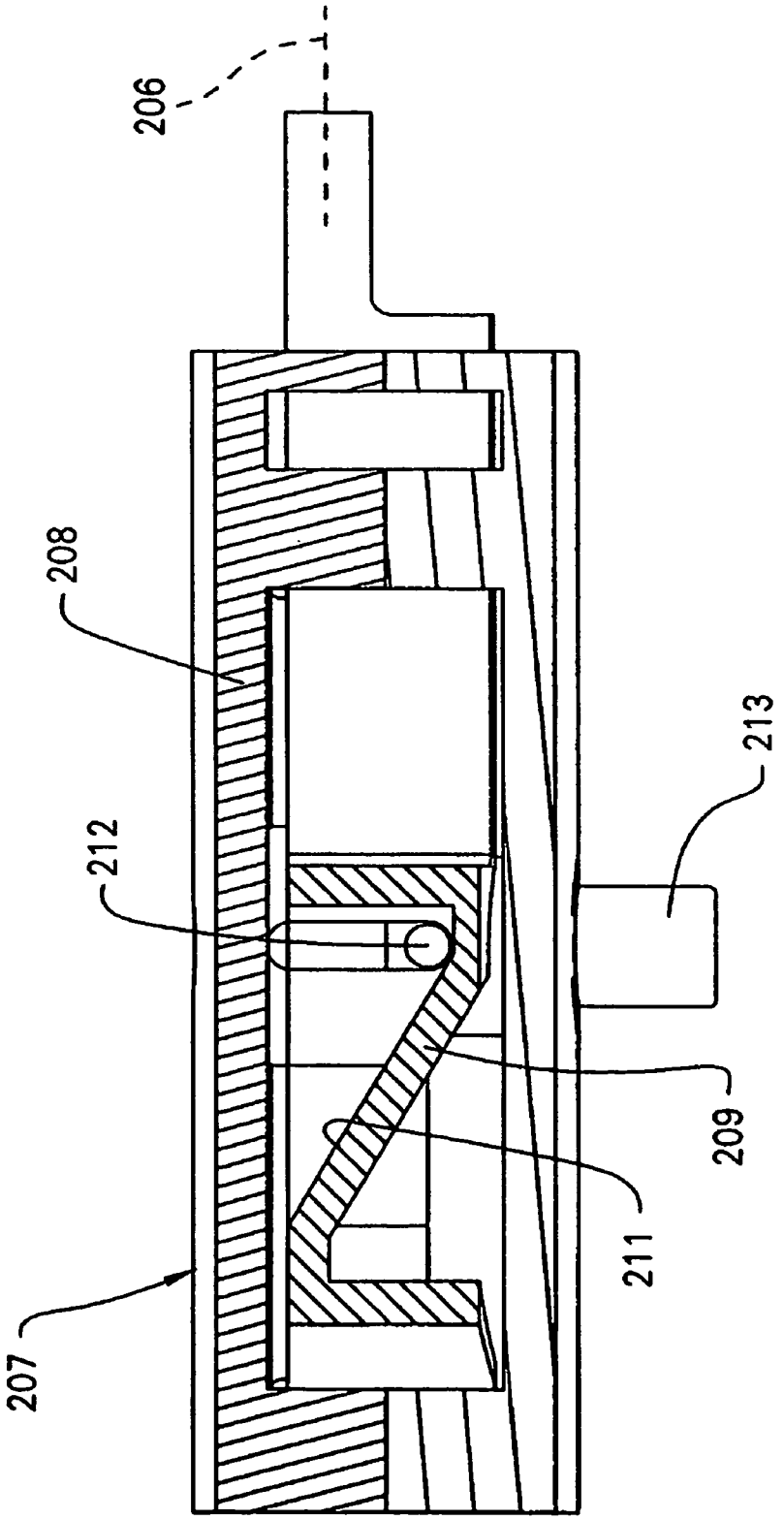

FIG. 42

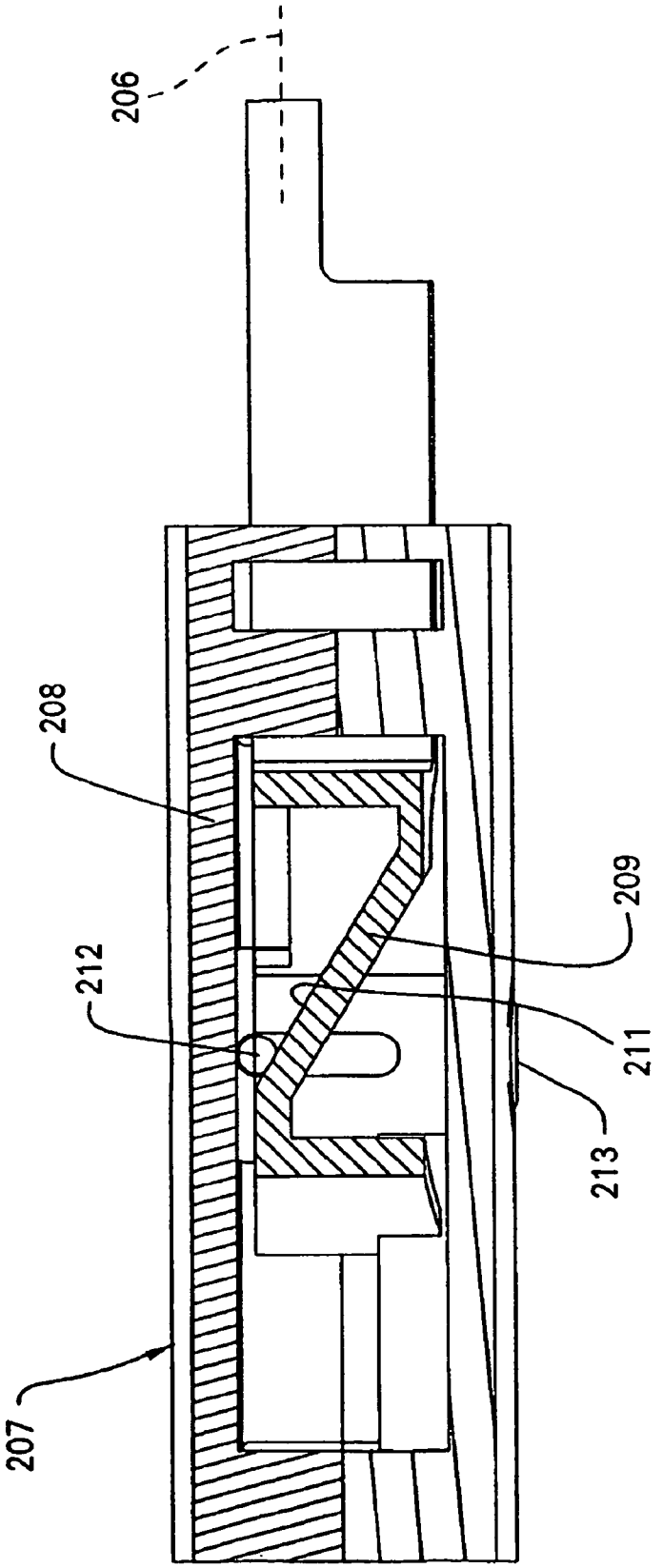

FIG. 43

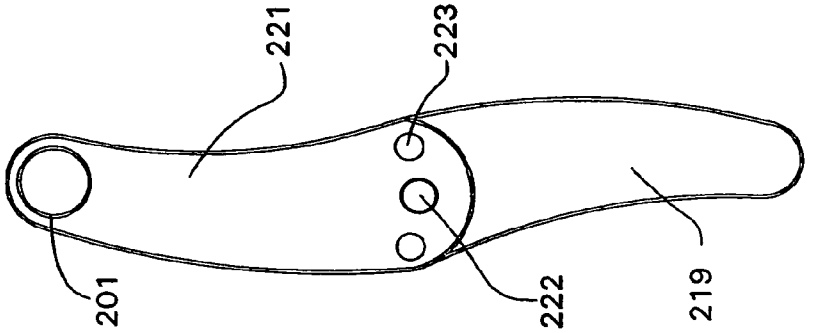

FIG. 46

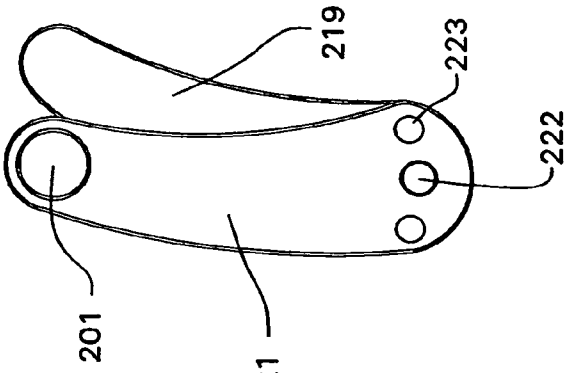

FIG. 45

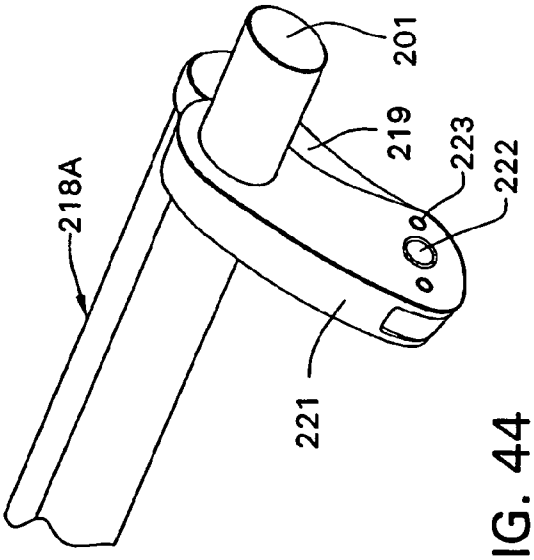

FIG. 44

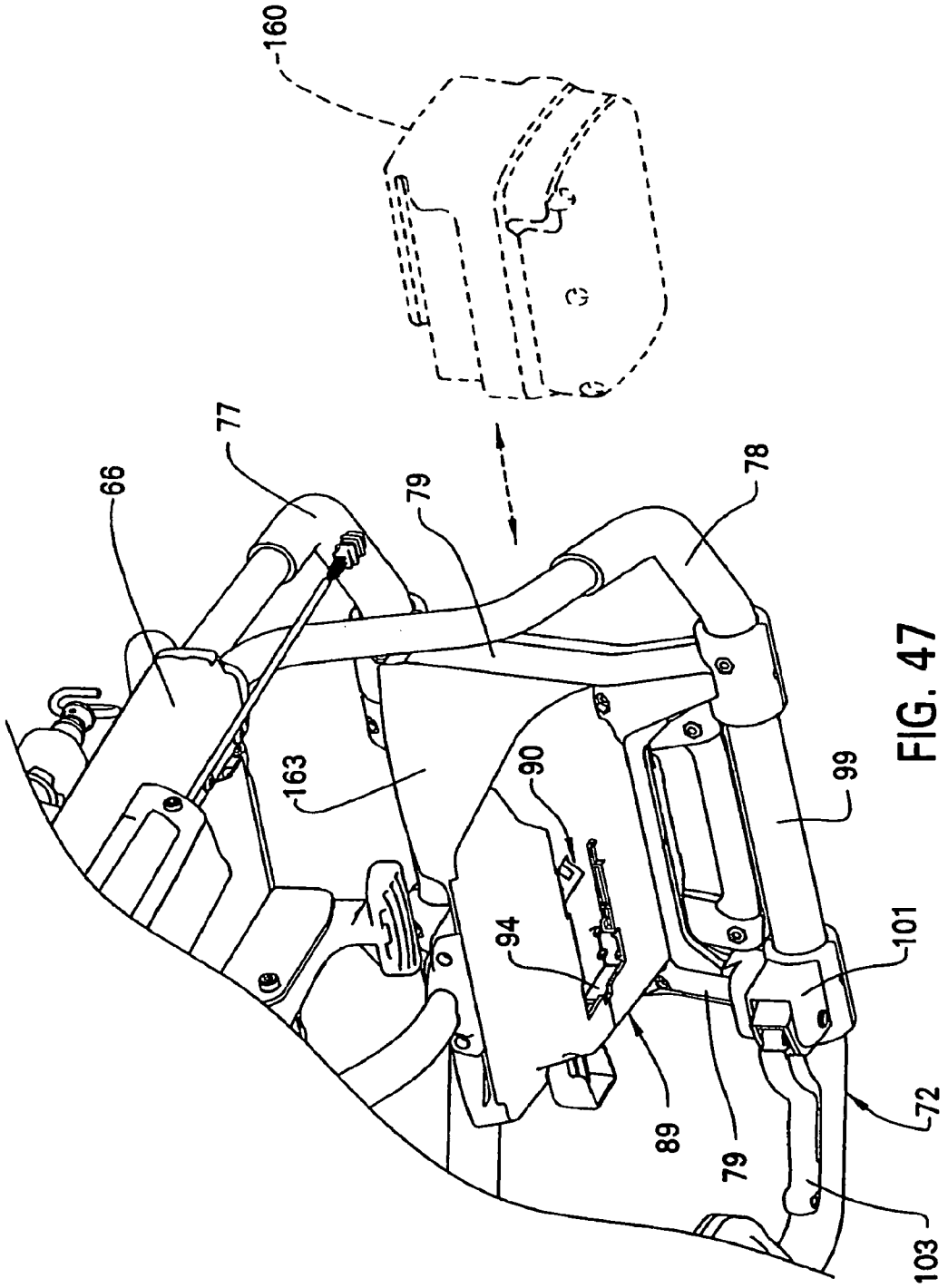

FIG. 47

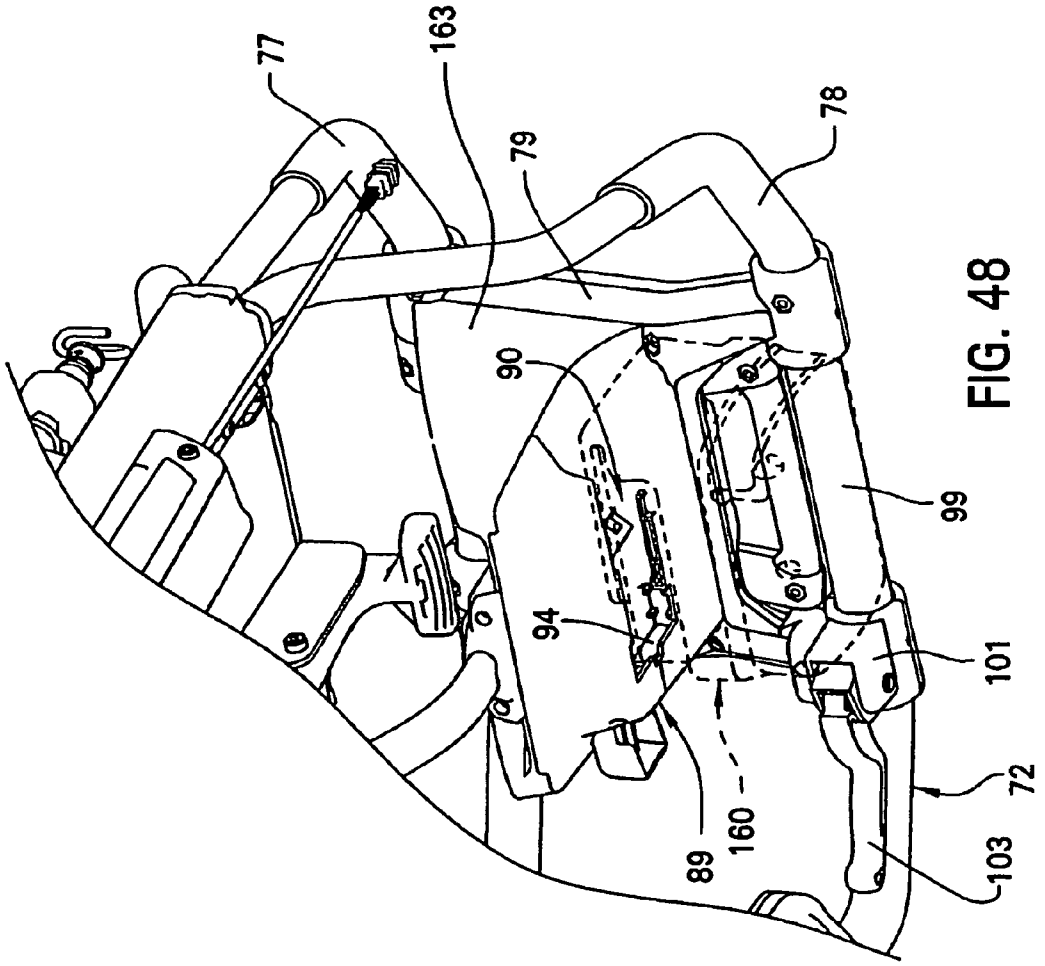

FIG. 48

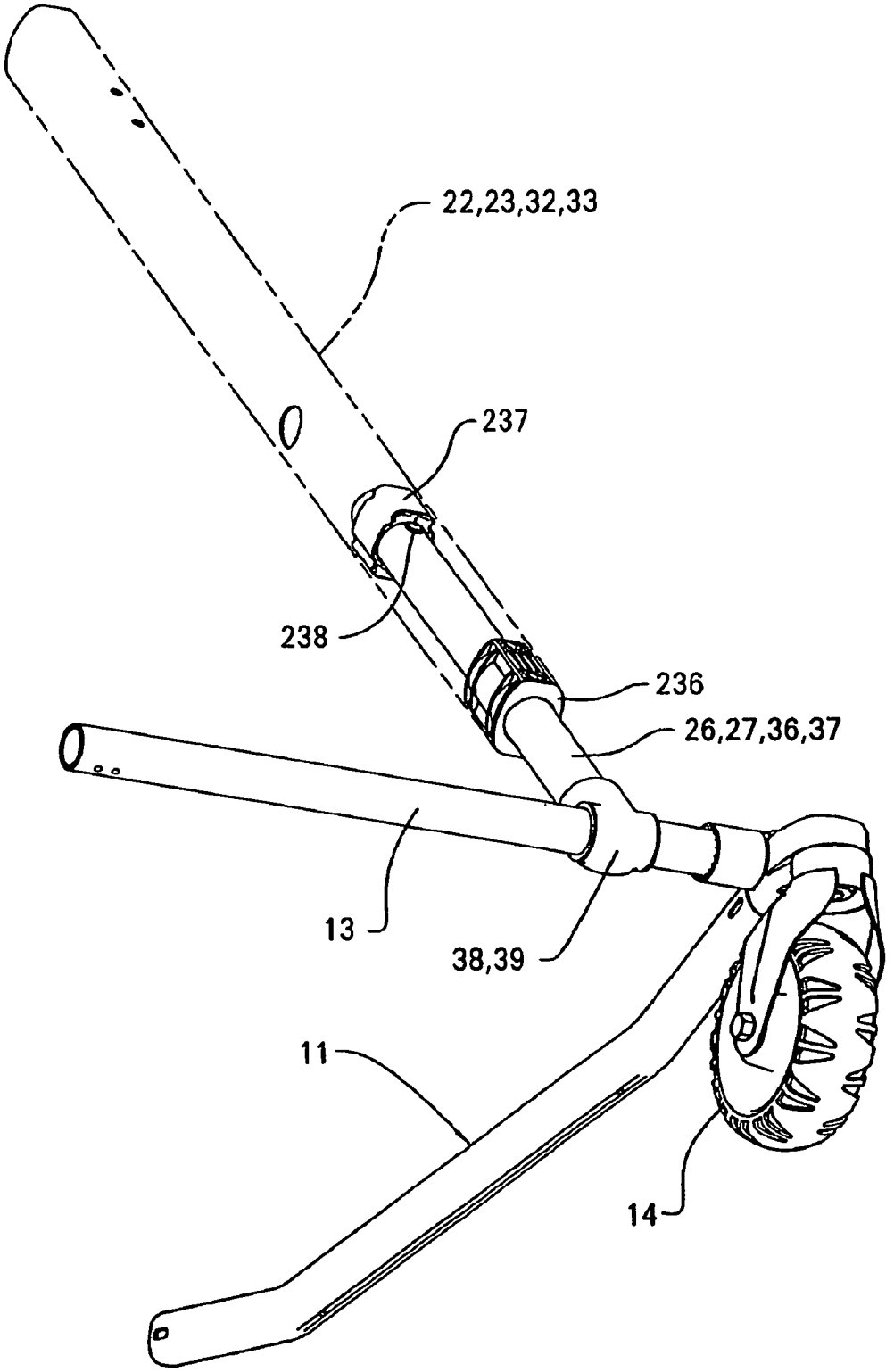

FIG. 49

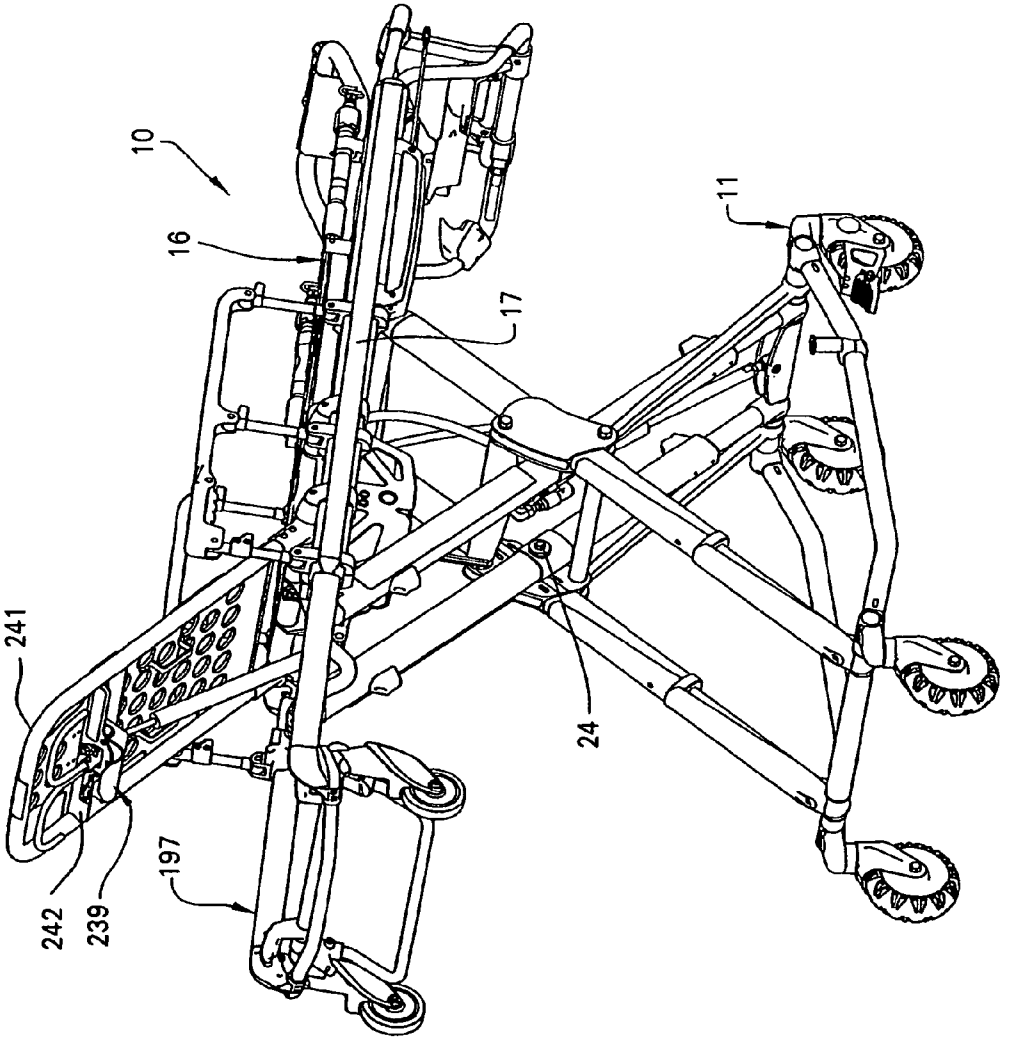

FIG. 50

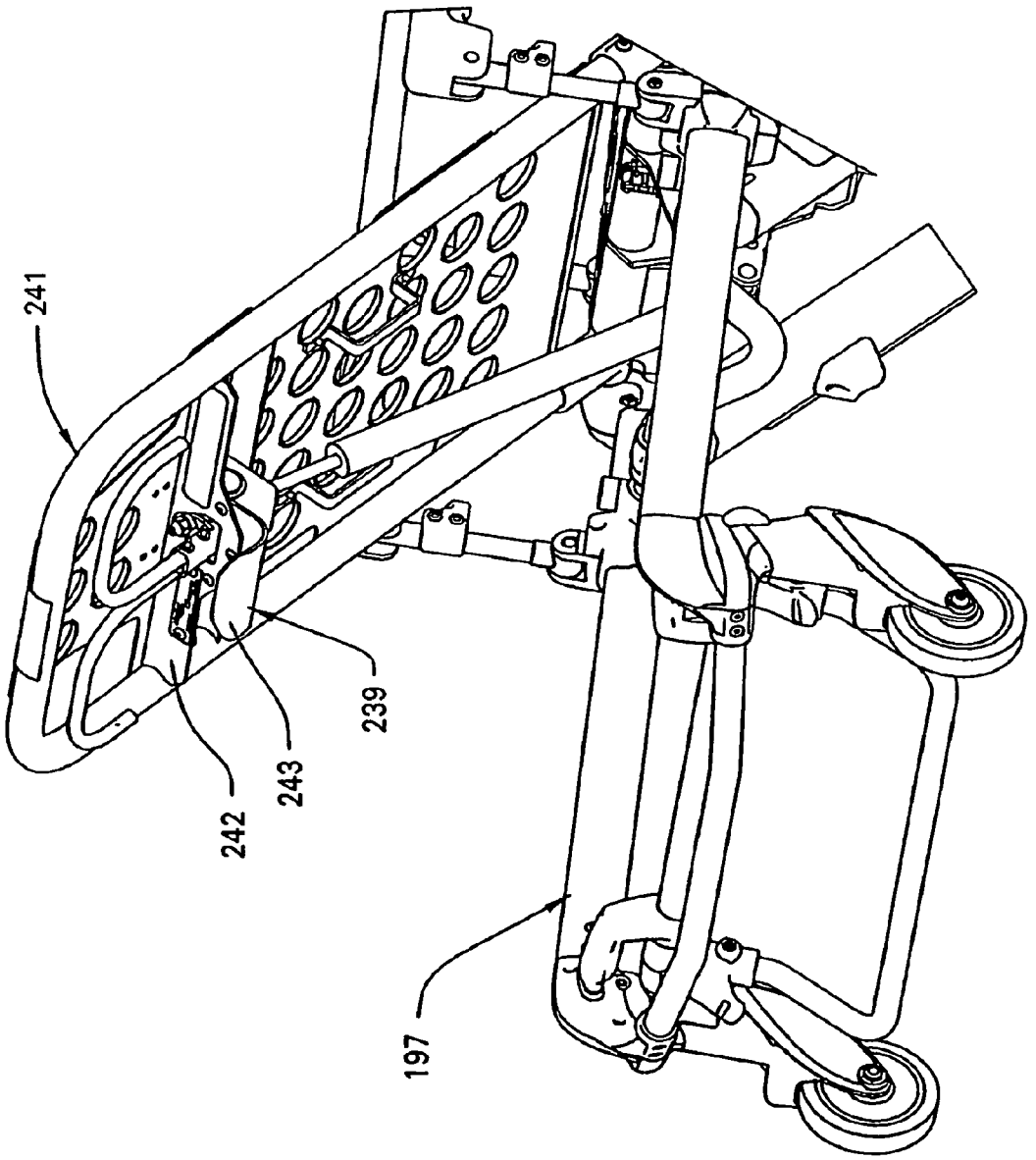

FIG. 51

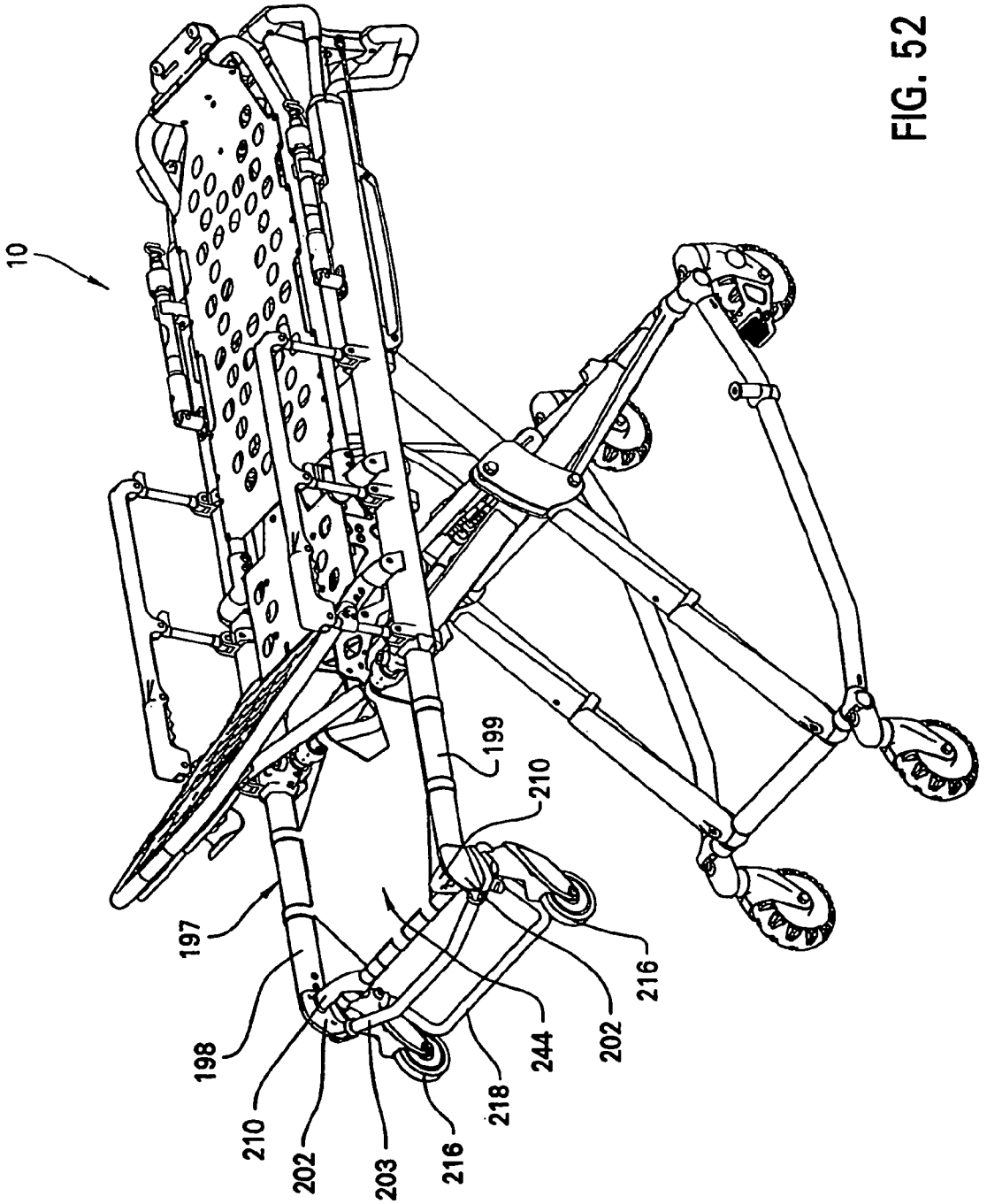

FIG. 52

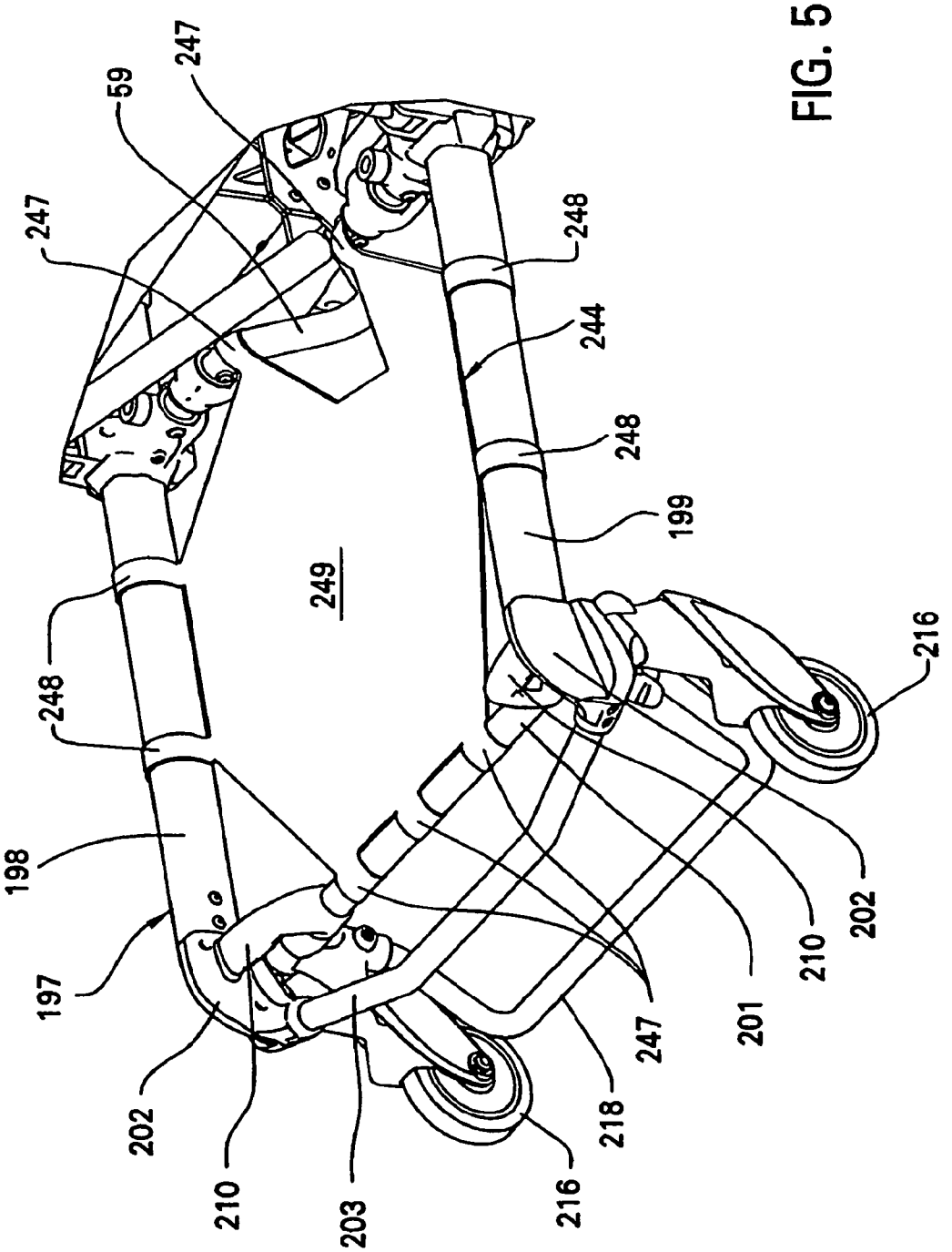
247
59
247
248
244
248
199
249
248
198
197
202
210
203
216
218
247
201
210
202
216

FIG. 53

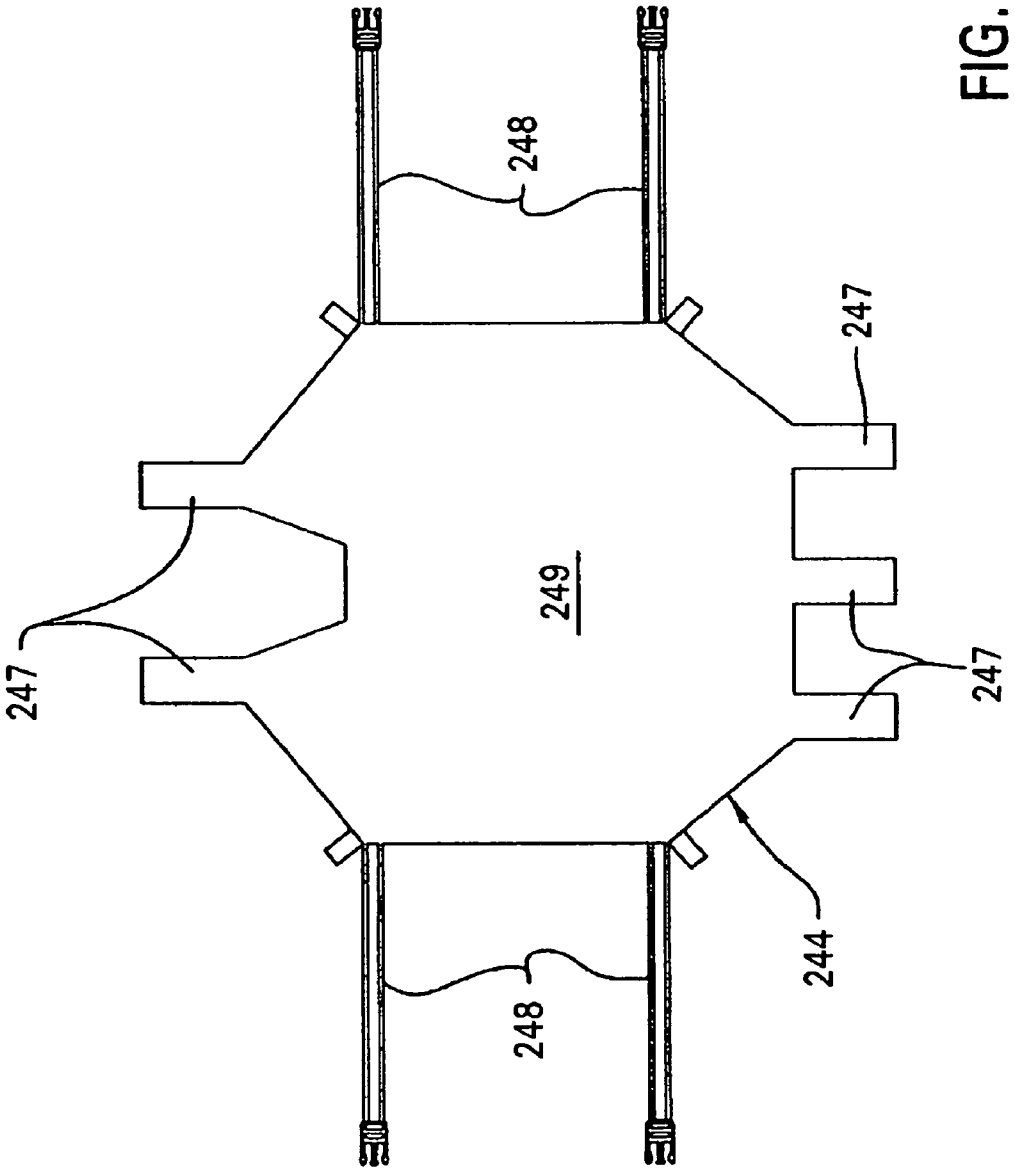

FIG. 54

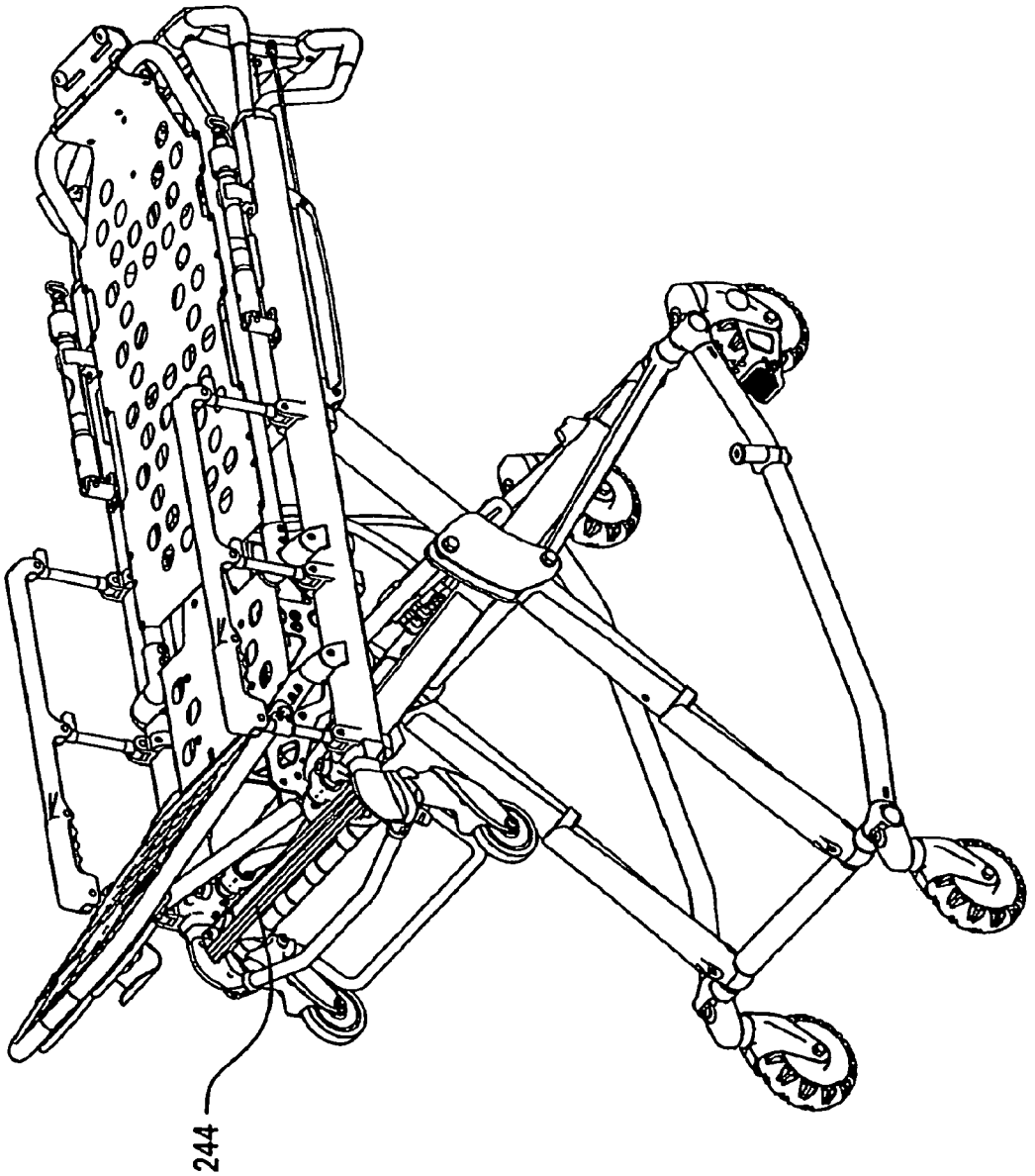

FIG. 55

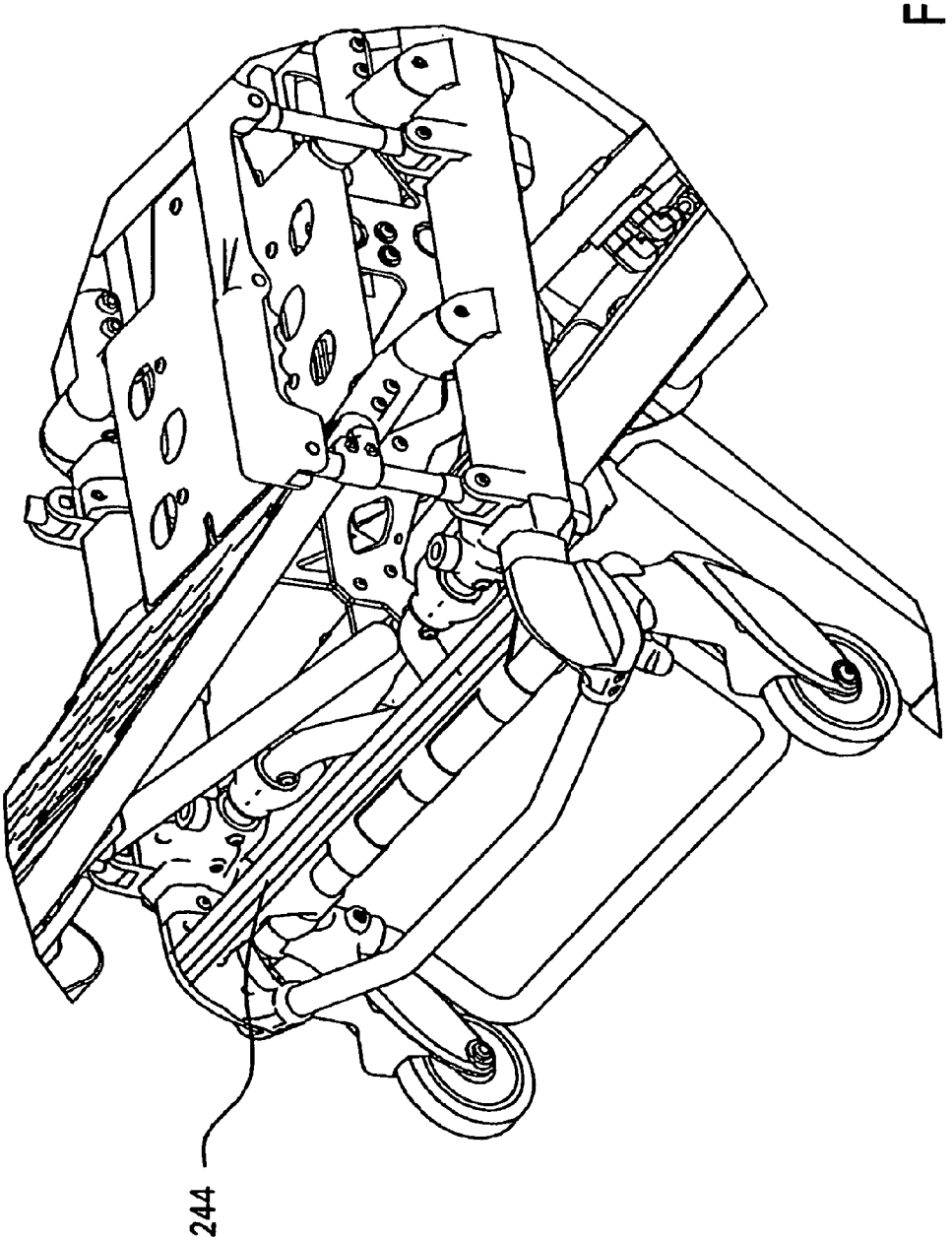

FIG. 56

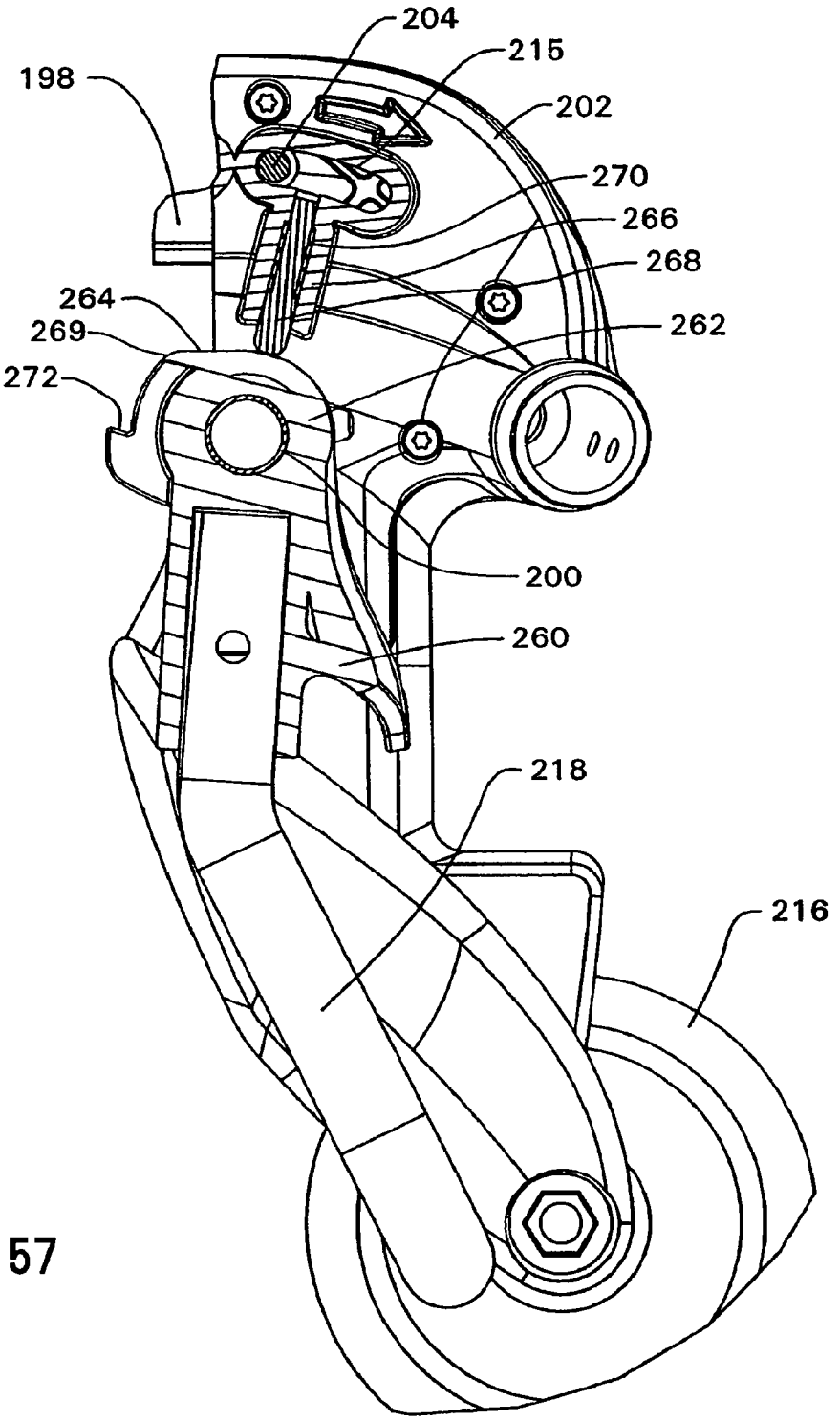

FIG. 57

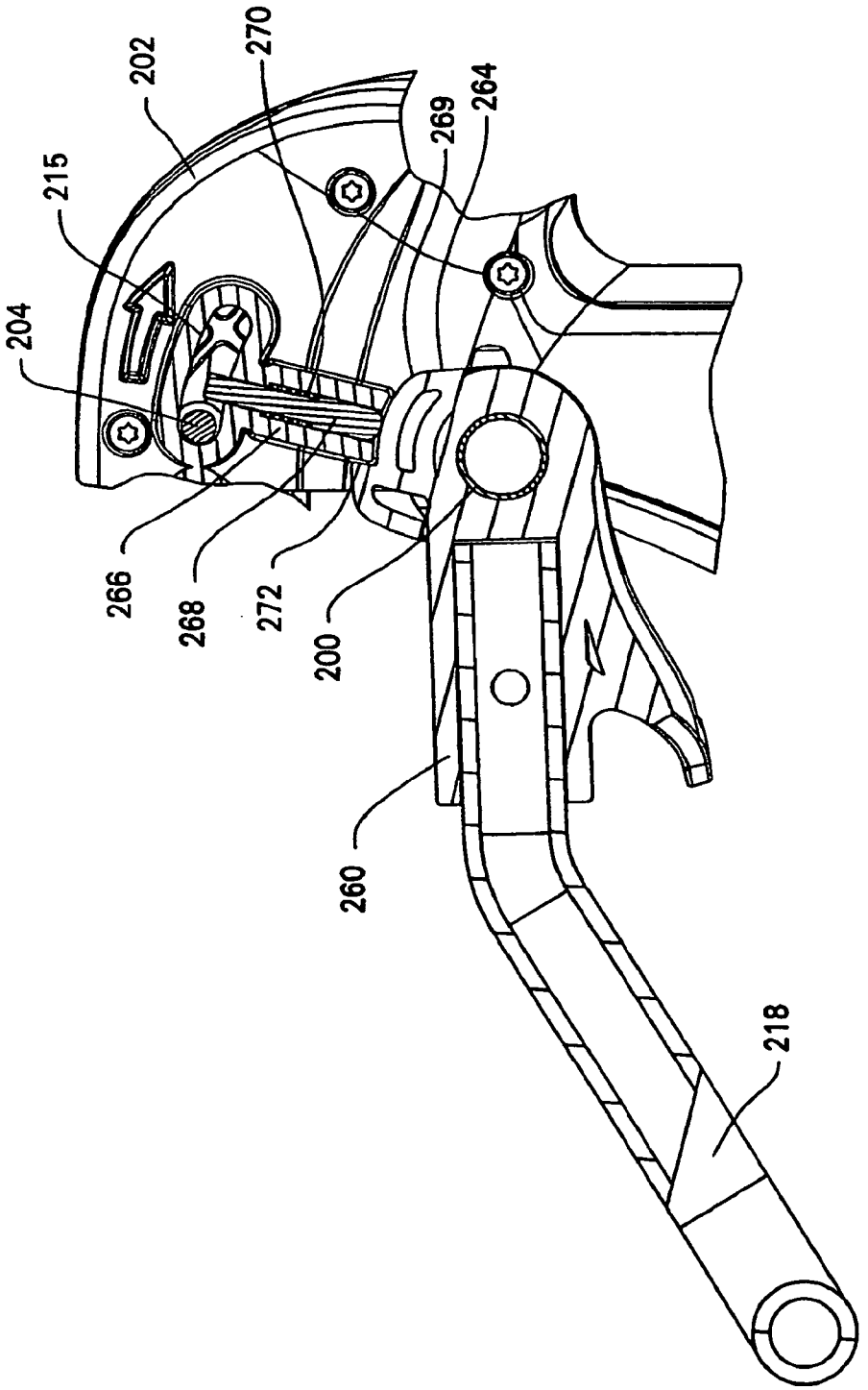

FIG. 58

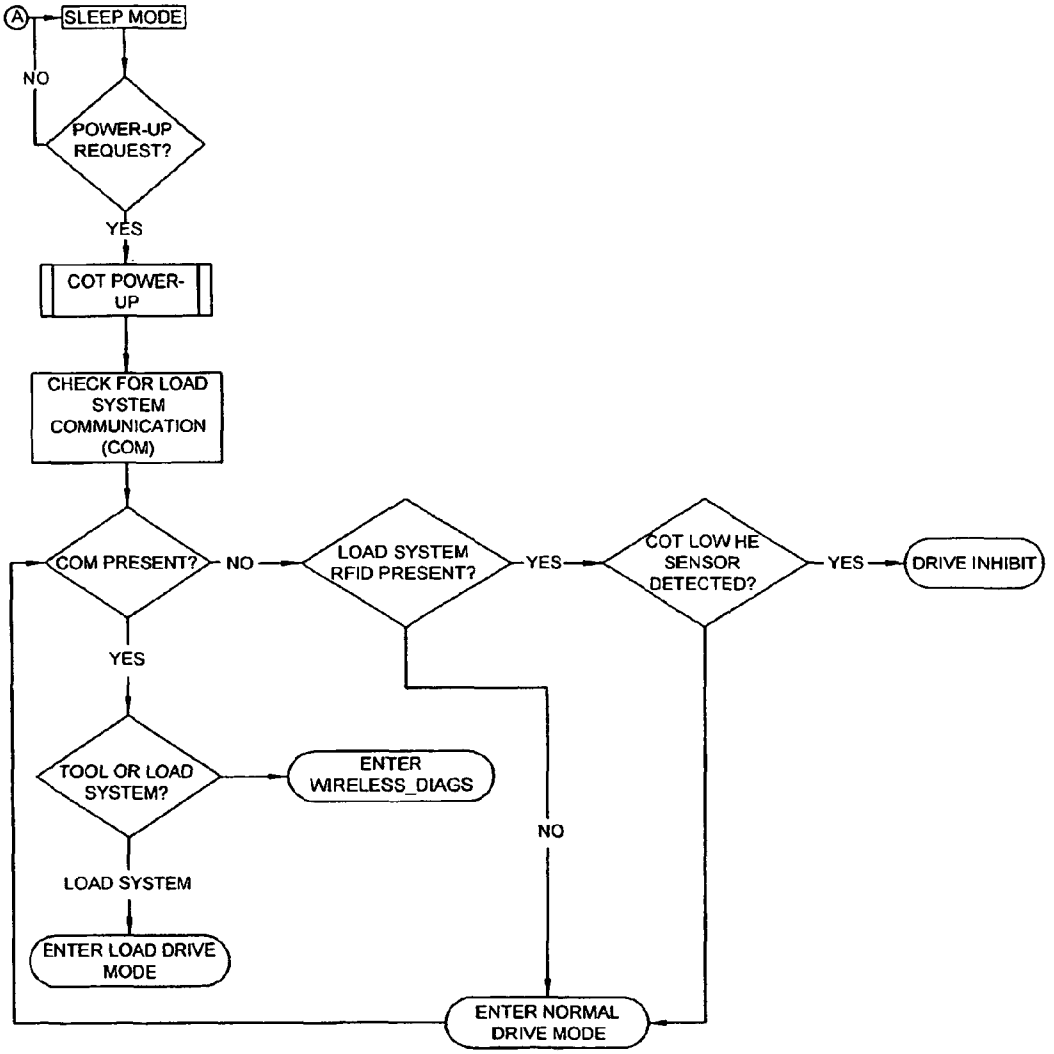
A
SLEEP MODE
NO
POWER-UP REQUEST?
YES
COT POWER-UP
CHECK FOR LOAD SYSTEM COMMUNICATION (COM)
COM PRESENT?
NO
LOAD SYSTEM RFID PRESENT?
YES
COT LOW HE SENSOR DETECTED?
YES
DRIVE INHIBIT
YES
TOOL OR LOAD SYSTEM?
ENTER WIRELESS_DIAGS
NO
LOAD SYSTEM
ENTER LOAD DRIVE MODE
ENTER NORMAL DRIVE MODE

FIG. 59

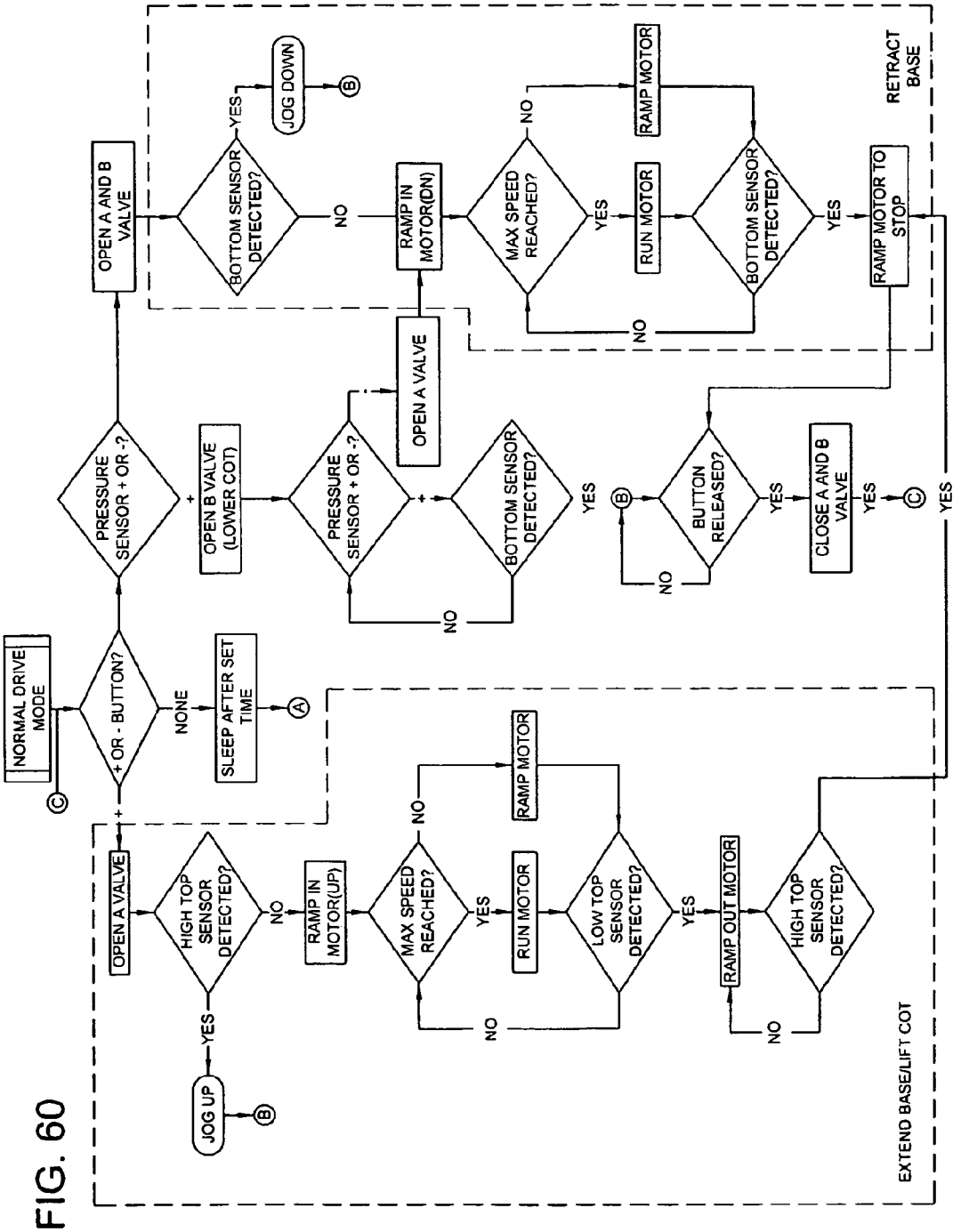
NORMAL DRIVE MODE
C
+ OR - BUTTON?
NONE
SLEEP AFTER SET TIME
A
PRESSURE SENSOR + OR -?
OPEN A AND B VALVE
OPEN B VALVE (LOWER COT)
PRESSURE SENSOR + OR -?
OPEN A VALVE
BOTTOM SENSOR DETECTED?
YES
NO
BOTTOM SENSOR DETECTED?
YES
JOG DOWN
B
NO
RAMP IN MOTOR(DN)
MAX SPEED REACHED?
NO
RAMP MOTOR
YES
RUN MOTOR
BOTTOM SENSOR DETECTED?
YES
NO
RAMP MOTOR TO STOP
RETRACT BASE
BUTTON RELEASED?
B
NO
YES
CLOSE A AND B VALVE
YES
C
YES
OPEN A VALVE
HIGH TOP SENSOR DETECTED?
YES
JOG UP
B
NO
RAMP IN MOTOR(UP)
MAX SPEED REACHED?
NO
RAMP MOTOR
YES
RUN MOTOR
LOW TOP SENSOR DETECTED?
YES
RAMP OUT MOTOR
HIGH TOP SENSOR DETECTED?
NO
EXTEND BASE/LIFT COT

FIG. 60

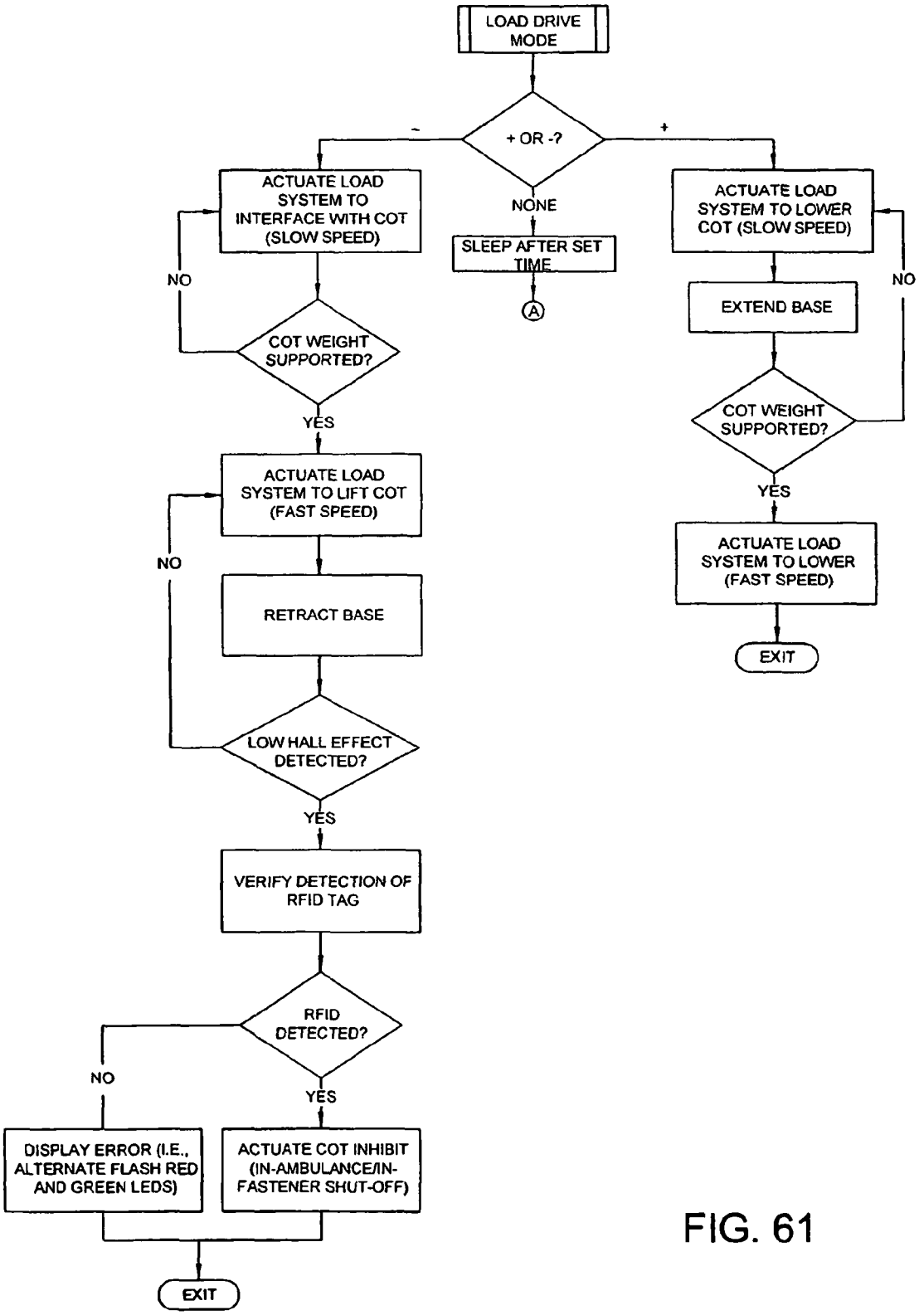
LOAD DRIVE MODE
+ OR -?
-
+
NONE
SLEEP AFTER SET TIME
A
ACTUATE LOAD SYSTEM TO INTERFACE WITH COT (SLOW SPEED)
NO
COT WEIGHT SUPPORTED?
YES
ACTUATE LOAD SYSTEM TO LIFT COT (FAST SPEED)
NO
RETRACT BASE
LOW HALL EFFECT DETECTED?
YES
VERIFY DETECTION OF RFID TAG
RFID DETECTED?
NO
YES
DISPLAY ERROR (I.E., ALTERNATE FLASH RED AND GREEN LEDS)
ACTUATE COT INHIBIT (IN-AMBULANCE/IN-FASTENER SHUT-OFF)
EXIT
ACTUATE LOAD SYSTEM TO LOWER COT (SLOW SPEED)
NO
EXTEND BASE
COT WEIGHT SUPPORTED?
YES
ACTUATE LOAD SYSTEM TO LOWER (FAST SPEED)
EXIT

FIG. 61

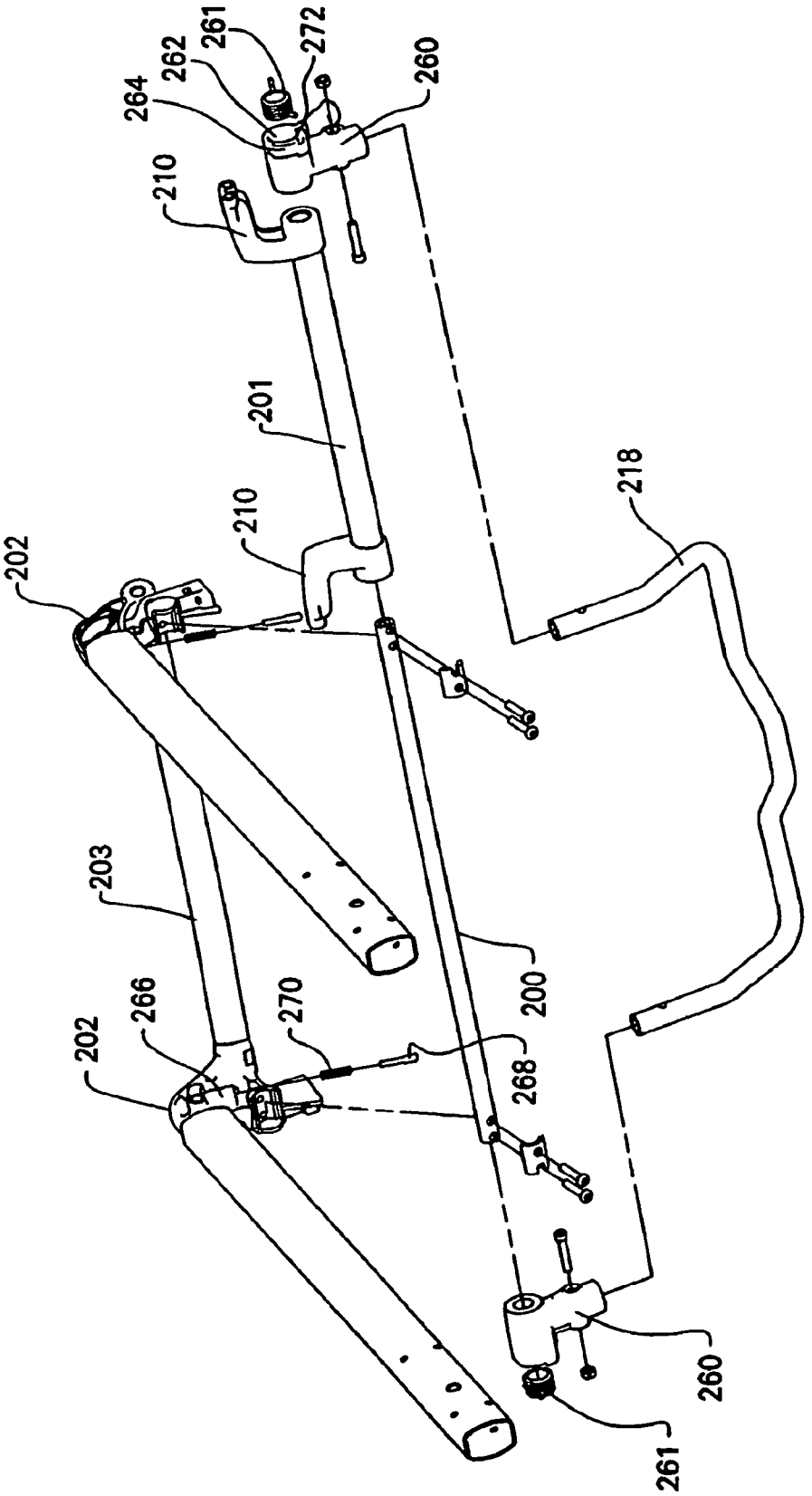
264
262
261
272
260
210
201
210
202
218
203
200
266
270
202
268
260
261

FIG. 62

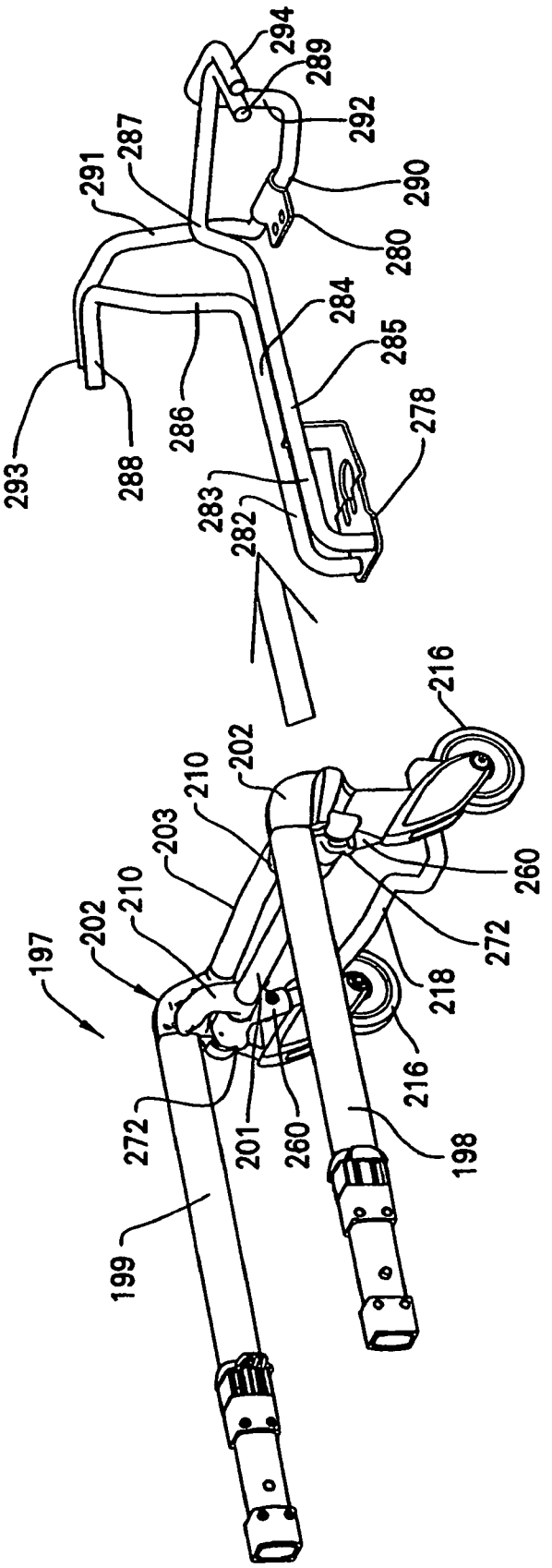
294
289
292
290
280
287
291
284
285
278
293
288
286
283
282
216
202
210
203
260
272
218
197
202
210
216
272
201
260
198
199

FIG. 63

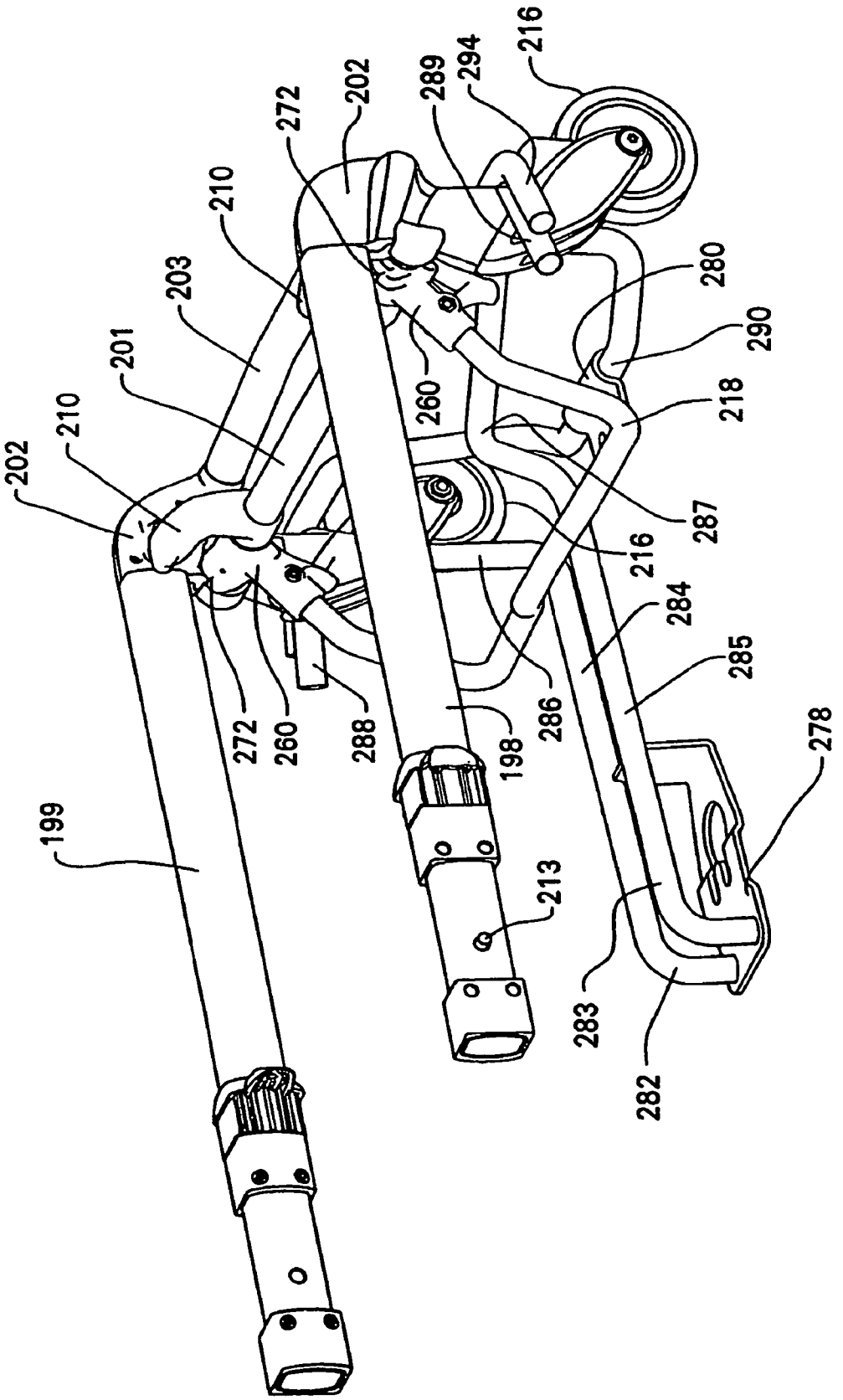
216
294
289
202
272
210
203
201
210
202
280
290
218
287
260
216
284
285
278
286
198
288
260
272
199
213
283
282

FIG. 64

AMBULANCE COT WITH PINCH SAFETY FEATURE

Matter enclosed in heavy brackets [ ] appears in the original patent but forms no part of this reissue specification; matter printed in italics indicates the additions made by reissue.

This application is a reissue application of U.S. Ser. No. 12/002,958, filed Dec. 19, 2007, now U.S. Pat. No. 7,540,047, issued on Jun. 2, 2009.

CROSS REFERENCE TO RELATED APPLICATIONS

This application is a division of U.S. application Ser. No. 11/172,434, filed Jun. 30, 2005, now U.S. Pat. No. 7,398,571, and claims the benefit of U.S. Provisional Application No. 60/613,151, filed Sep. 24, 2004.

FIELD OF THE INVENTION

This invention relates to an ambulance cot and accessories. This invention also relates to an ambulance cot having a wheel supported base and a litter raisable and lowerable by a powered elevating mechanism oriented between the base and the litter. This invention also relates to an ambulance cot having a wireless communication capability to facilitate communication between the ambulance cot and a loading system on an ambulance as well as facilitating wireless troubleshooting via a handheld wireless unit. This invention also relates to an ambulance cot having a longitudinally extendable head section with a latching mechanism to fix it in selected locations.

BACKGROUND OF THE INVENTION

Emergency Medical Service (EMS) personnel are required to handle the combined weight of a patient and the ambulance cot during various stages of maneuvering of the ambulance cot while separated from the ambulance. This cot manipulation often requires that the patient supported on the litter be lifted to various elevated heights above the floor. In some instances, the weight factor can cause EMS personnel injury that requires medical treatment.

As the inclusion of more and more sophisticated technology onto ambulance cots continues to occur, there is an increasing need to be able to quickly and accurately diagnose the complex equipment without requiring the ambulance cot to be removed from service.

Accordingly, it is advantageous to provide an ambulance cot equipped with an elevating mechanism to facilitate a lifting and lowering of the litter as well as an ability of the ambulance cot to communicate diagnostic issues in a convenient way without requiring removal of the ambulance cot from a field of use for a prolonged period of time.

SUMMARY OF THE INVENTION

This invention relates to an ambulance cot and accessories. This invention also relates to an ambulance cot having a wheel supported base and a litter raisable and lowerable by a powered elevating mechanism oriented between the base and the litter. This invention also relates to an ambulance cot having a wireless communication capability to facilitate communication between the ambulance cot and a loading system on an ambulance as well as facilitating wireless troubleshooting via a handheld wireless unit. This invention also relates to an ambulance cot having a longitudinally extendable head section with a latching mechanism to fix it in selected locations.

BRIEF DESCRIPTION OF THE DRAWINGS

Various objects and purposes of the invention will become apparent based upon a review of the following specification and upon a review of the several drawings, in which:

FIG. **1** is an isometric view of an ambulance cot embodying the invention, which ambulance cot is in the fully raised position;

FIG. **2** is an isometric view of an ambulance cot similar to FIG. **1**, except that the ambulance cot is in a mid-height position;

FIG. **3** is an isometric view of an ambulance cot similar to FIG. **1**, except that the ambulance cot is in the fully collapsed and lowered position;

FIG. **4** is an isometric view of a fragment of the hydraulic elevating mechanism on the ambulance cot;

FIG. **5** is a fragmentary isometric view of the base, elevating mechanism and a fragment of the litter on the ambulance cot;

FIG. **6** is an isometric view of a fragment of the litter frame;

FIG. **7** is a side view of a collapsed base and elevating mechanism on the ambulance cot;

FIG. **8** is an isometric view of a foot end lift handle assembly on the ambulance cot;

FIG. **9** is a side elevational sectional view of the foot end lift handle assembly sectioned through the switches;

FIG. **10** is an isometric view of a switch housing that is mounted on the foot end lift handle assembly;

FIG. **11** is an electrical schematic of a switch mounted on the switch housing illustrated in FIG. **10**;

FIG. **12** is a bottom view of a release handle mechanism mounted on the foot end lift handle assembly, which handle is in the stowed position;

FIG. **13** is a view similar to FIG. **12**, except that the handle has been shifted to an operative position;

FIG. **14** is a view similar to FIG. **13**, except that the handle has been moved to an operated position;

FIG. **15** is an isometric view of a mounting assembly on the ambulance cot for the hydraulic circuit;

FIG. **16** is a fragmentary sectional view of a portion of the base whereat the base connects to an X frame member;

FIG. **17** is a hydraulic circuit diagram embodied on the ambulance cot;

FIGS. **18-23** are additional illustrations of the hydraulic circuit diagram illustrated in FIG. **17**, except that various valves have been shifted to demonstrate operation of the hydraulic circuit;

FIG. **24** is a schematic representation of a control for the hydraulic circuit;

FIG. **25** is a decision tree diagram representative of the operational characteristics of the control illustrated in FIG. **24** and the hydraulic circuit of FIGS. **17-23**;

FIG. **26** is an isometric view of the litter and similar to the illustration in FIG. **1**;

FIG. **27** is an isometric view of a fragment of the ambulance cot in the collapsed and lowered position inside a cargo area of an ambulance;

FIG. **28** is a bottom view of the hydraulic assembly illustrated in FIG. **15** (minus the mounting assembly);

FIG. **29** is a view similar to FIG. **28**, except that one of the valves has been actuated;

FIG. **30** is a view similar to FIG. **29**, except that both of the valves have been actuated;

FIG. **31** is a sectional view of one of the valves illustrated in FIGS. **28-30**;

FIG. **32** is a decision tree diagram for the logic employed on a handheld diagnostics tool;

FIG. **33** is a decision tree diagram for the general logic employed on the cot and load system in an ambulance to facilitate wireless diagnostics;

FIG. **33**A is a modified decision tree diagram for the logic employed on a handheld tool used for wireless programming, remote control and diagnostics.

FIG. **34** is a fragmentary isometric view of an antenna system on the ambulance cot as well as an antenna system on a load arm provided on the ambulance;

FIG. **35** is a side elevational view of the ambulance cot in the fully collapsed position with the head section retracted;

FIG. **36** is a view similar to FIG. **35**, except that the head section on the ambulance cot has been moved to the fully deployed position;

FIG. **37** is a fragmentary isometric view of the head section on the ambulance cot;

FIG. **38** is a view similar to FIG. **37**, except that a handle has been shifted to a fully operated position;

FIG. **39** is a side view of the head section with the handle in a first position;

FIG. **40** is a view similar to FIG. **39**, except that the handle has been moved to the fully operated second position;

FIG. **41** is a view similar to FIG. **40**, except that the handle has been shifted back to its first position illustrated in FIG. **39**;

FIG. **42** is a sectional view of a latch mechanism on the head section;

FIG. **43** is a view similar to FIG. **42**, except that the latch mechanism has been shifted to its fully operated position;

FIG. **44** is an isometric view of a fully folded foldable safety bar on the head section;

FIG. **45** is a side elevational view of the safety bar in the fully folded position as illustrated in FIG. **44**;

FIG. **46** is a view of the safety bar in the unfolded position;

FIG. **47** is a bottom isometric view of the foot end lift handle assembly with a battery locked into an operating position;

FIG. **48** is a view similar to FIG. **47** except that the battery has been moved to an inoperative position;

FIG. **49** is a fragmentary isometric view of a non-circular X frame member receiving therein a circular further X frame member;

FIG. **50** is an isometric view of the head end of the cot and showing on the underside of the fowler an accessory hook;

FIG. **51** is an enlarged view of a fragment of FIG. **50**;

FIG. **52** is an isometric view of the cot having a collapsible pouch accessory thereon, which pouch is in the extended position of use in response to an extension of the head section;

FIG. **53** is an enlarged view of a fragment of FIG. **52**;

FIG. **54** is a plan view of the pouch accessory;

FIG. **55** is a view similar to FIG. **52** but with the pouch in the collapsed condition in response to a retraction of the head section;

FIG. **56** is an enlarged view of a fragment of FIG. **55**;

FIG. **57** is a partial cross-sectional view of a retractable head section latch disabler in a disengaged position;

FIG. **58** is a partial cross-sectional view according to FIG. **57** of the latch disabler in an engaged position;

FIG. **59** is a decision tree diagram for the logic employed in environments utilizing a Radio Frequency Identification tag;

FIG. **60** is an enhanced decision tree diagram for FIG. **59** presenting the general logic employed during a normal drive mode;

FIG. **61** is a decision tree diagram for the logic employed in the FIG. **59** environment, particularly during a loading of the ambulance cot onto the load mechanism on the ambulance;

FIG. **62** is an exploded perspective view of the retractable head section and latch disabler of FIGS. **57-58**;

FIG. **63** is a perspective view of the head section of the ambulance cot aligned with an antler system for an ambulance cargo area; and

FIG. **64** is a perspective view of the head section engaged with the antler system of FIG. **63**.

DETAILED DESCRIPTION

Ambulance Cot

An ambulance cot **10** embodying the invention is illustrated in the drawings. The ambulance cot **10** is similar to the ambulance cots disclosed in U.S. Pat. No. 5,537,700 and WO 2004/064698, the subject matters thereof being incorporated herein by reference. The ambulance cot **10** includes a base frame **11** composed of longitudinally extending side rails **12** and crosswise extending rails **13** interconnected at the ends thereof to the side rails **12** to form a rectangle. Castered wheels **14** are operatively connected to each corner of the rectangle base frame formed by the rails **12** and **13**.

The ambulance cot **10** includes a litter **16** comprising a litter frame **17**. An elevating mechanism **18** is provided between the base frame **11** and the litter frame **17** in order to facilitate a lifting and lowering of the litter **16** relative to the ground. More specifically, the elevating mechanism **18** includes a pair of side-by-side oriented "X" frames **19** and **21**. The X frame **19** includes a pair of X frame members **22** and **23** connected together adjacent their midlength portions by means of a pivot axle **24**. Each of the X frame members **22** and **23** is hollow and telescopingly receives therein a further X frame member **26** and an X frame member **27**, respectively. The further X frame members **26** and **27** are supported for movement into and out of the respective X frame members **22** and **23**. The distal end of the further X frame member **26** is secured via a connection **28** to the cross rail **13** at the left end (foot end) of the base frame illustrated in FIG. **1** whereas the distal end of the further X frame member **27** is connected via a connection **29** to the cross rail **13** at the right end of the base frame **11**.

The X frame **21** is similarly constructed and includes a pair of X frame members **32** and **33** which are connected together at about their midlength portions by the aforesaid axle **24**. While the axle **24** is illustrated to extend laterally between the X frames **19** and **21**, it is to be understood that separate axles **24** can, if desired, be employed (as shown in FIG. **50**). The X frame members **32** and **33** are hollow and telescopingly receive therein a further X frame member **36** telescopingly received in the X frame member **32** whereas a further X frame member **37** is telescopingly received in the X frame member **33**. The distal end of the further X frame member **36** is connected via a connector **38** to the cross rail **13** at the foot end of the base frame **11** and the distal end of the further X frame member **37** is connected via a connector **39** to the cross rail **13** at the head end of the base frame **11**. The X frame members **22**, **26** extend parallel to the X frame members **32**, **36** whereas the X frame members **23**, **27** extend parallel to the X frame members **33**, **37**.

Referring to FIG. **4**, the cross rail **13** at the foot end of the base frame **11** is illustrated. To the cross rail **13** there is

pivotally connected a pair of laterally spaced linkage members **41**. In this particular embodiment, each of the linkage members **41** includes at the end thereof adjacent the cross rail **13** a bore **42** which encircles the cross rail **13** to facilitate the pivotal connection of each of the linkages **41** about the longitudinal axis of the cross rail **13**. The ends of each of the linkages **41** remote from the cross rail **13** are connected to respective laterally spaced brackets **43** by means of a fastener **44**. In this particular embodiment, a sleeve **46** extends between the respective brackets **43** and receives therein the respective fastener **44** to facilitate the connection of the linkages **41** to the brackets **43**. The axle **24** also facilitates a connection of the respective brackets **43**. Each of the brackets **43** includes a receptacle **47** into which is received a respective X frame member **23** and **33** as illustrated in FIG. **1**. In this particular embodiment, the axle **24** passes through an opening provided in each of the respective X frame members **23** and **33**.

A first bracket **48** (FIG. **4**) is fixedly secured to the cross rail **13**. A second bracket **49** is secured to a rod **51** that is connected to and extends between the respective brackets **43**. In this particular embodiment, the rod **51** is connected to each bracket by a respective fastener **52**. It is to be noted that there is a spacing between the axle **24** and the respective rods **46** and **51**. The purpose of this spacing will become apparent below.

At least one linear actuator **53** (two, if desired to provide improved stability) is connected to and extends between the respective brackets **48** and **49**. In this particular embodiment, the linear actuator **53** includes a hydraulic cylinder housing **54** fastened to the bracket **49**, which cylinder housing **54** includes a reciprocal rod **56** having a piston (not illustrated) at one end thereof located within the cylinder housing **54**. The distal end of the reciprocal rod **56** is connected in a conventional manner by a universal-like joint **55** to the bracket **48**. That is, the universal joint allows pivotal movement about two orthogonally related axes. As will be evident from FIG. **4**, extension and retraction of the reciprocal rod **56** will facilitate movement of the brackets **43** about the axis of the rod **46**. The end of the rod is lengthwise adjustable to accommodate tolerances encountered during production.

As is illustrated in FIG. **5**, the ends of the X frame members **22** and **32** remote from the base frame **11** are each pivotally secured to a cross rail **59** adjacent the head end of the litter frame **17** as at **57** and by respective connectors **58**. The connectors **58** are each relatively movable with respect to the cross rail **59**. In one embodiment (FIG. **6**), on the other hand, the ends of the X frame members **23** and **33** remote from the base frame **11** are connected by a hollow pivot tube **61** via connectors **62**. Only one of the connectors **62** is illustrated in FIG. **6**, it being understood that the end of the X frame member **23** remote from the base frame **11** also has a connector **62** thereon. A slide bearing (not shown) can, if desired, be provided to allow longitudinal movement of the X frame member **33** along the litter rail **66**. Alternatively, a timing rod **63** can be relatively rotatably received inside the pivot tube **61**. Opposite ends of the timing rod **63** have a pinion gear **64** fastened thereto and rotatable therewith. The purpose of the timing rod and the pinion gear **64** oriented at the opposite ends thereof will become apparent below. If desired, the X frame members **23**, **33** and the pivot tube **61** can be welded together to enhance the overall strength and resistance to twisting characteristics.

As is shown in FIG. **5**, the litter **16** comprises a litter frame **17** which consists of a pair of lengthwise extending side rails that are laterally spaced from one another, which side rails **66** are connected at the head end by the aforesaid cross rail **59**, further cross rails **67** and other cross rails not illustrated. A housing **68** (see also FIG. **6**) is secured to the underside of each of the side rails **66** at a location spaced from the head ends thereof. Each housing **68** has an inwardly opening recess **69** therein, the openings in each of the housings **68** opposing one another. In one embodiment, the openings **69** each have a downwardly facing upper wall **71** to which is secured a toothed rack **72** extending lengthwise of each of the respective side rails **66**. The teeth of each of the pinion gears **64** are configured to mesh with the teeth of the toothed rack **72**. Since the pinion gears **64** are fixedly secured to the timing rod **63**, the mating teeth on the pinion gear **64** and the rack **72** will prevent twisting of the elevating mechanism **18** as it raises and lowers the litter **16** relative to the base frame **11**.

In this particular embodiment, the longitudinally extending side rails **66** of the litter frame **17** are hollow. Thus, the cross rails **59** and **67** as well as others not specifically described are secured by brackets to the exterior surface of each of the side rails **66**. Several of the brackets **71** are illustrated in FIG. **5**.

A foot end lift handle mechanism **72** is illustrated in FIG. **8** and consists of a pair of vertically spaced U shaped frame members **73** and **74**. The legs of each of the U shaped frame members **73** and **74** are joined together by a bracket **76** (only one bracket being illustrated in FIG. **8**), which bracket **76** is fastened to the respective legs by fasteners not illustrated. Each bracket **76** is telescoped inside of the foot end of the respective side rail **66** as illustrated in FIG. **1**. Further, the legs of the lower frame member **74** diverge away from the legs of the frame member **73** so that there is provided pairs of vertically spaced hand grip areas as at **77** and **78** on the respective frame members **73** and **74**, respectively. Plural spacer brackets **79** are connected to the bight portions of each of the frame members **73** and **74** to maintain the vertical spacing between the grip areas **77** and **78**. Fasteners (not illustrated) facilitate a connection of the brackets **76** to the interior of each of the respective side rails **66**.

A battery mount **89** is secured to the foot end lift handle assembly **72**, preferably to the underside of the assembly as show in FIGS. **47** and **48**. The battery mount **89** includes a downwardly opening bayonet socket **90** having electrical contacts **94** exposed therein for connection to a properly configured battery **160** shown in broken lines. The manner in which the battery **160** connects to the electrical contacts **94** when the battery is in the broken line position shown in FIG. **48** is conventional and, therefore, further discussion about this connection is believed unnecessary. The electrical contacts **94** on the battery mount **89** are connected to the control **158** as schematically shown in FIG. **24**. In order to connect the battery **160** into place in the battery mount **89**, the battery is moved leftwardly from the FIG. **47** disconnected inactive position to the FIG. **48** connected and active position. The battery **160** in the installed position of FIG. **48** is releasably locked in place and is capable of withstanding excessive acceleration forces that will occur during an accident to remain locked in place in the FIG. **48** position.

One leg **81** of the frame member **73** includes a switch housing **82** fastened thereto by at least one fastener **83** (FIG. **9**). The switch housing **82** is located in an ergonomically advantageous position to the obvious grasping point of the user. An enlarged isometric view of the switch housing **82** is illustrated in FIG. **10**. The switch housing has a pair of manually engageable buttons **84** and **86** thereon. The manually engageable buttons **84** and **86** are shielded from above by a shroud **87** and are of a low profile membrane design so as to prevent inadvertent actuation of the buttons **84** and **86** by a patient lying on the upper surface of the litter **16**. That is, the

shroud **87** is oriented at the head end of the switch housing **82**. The switch housing **82** includes an opening **88** extending therethrough and through which the leg **81** of the frame **73** extends. The fastener **83** extends through a hole in the leg **81** to facilitate a connection of the housing **82** to the leg **81** extending through the opening **88**.

Similarly, the leg **91** of the frame member **74** includes a further switch housing **92**, located in an ergonomically advantageous position to the obvious grasping point for the user, having an opening **98** extending therethrough and through which the leg **91** extends. A fastener **93** facilitates a connection of the switch housing **92** to the leg **91** that extends through the opening **98**. The switch housing **92** includes a construction identical to the switch housing **82** illustrated in FIG. **10** and it includes a pair of manually engageable buttons **84** and **86** which, as will be explained in more detail below, provide a redundant operation with respect to the buttons in the switch housing **82**. The switch housing **92** also includes a shroud **97** similar to the shroud **87** and it is provided for the same purpose, namely, to shield the buttons **84**, **86** from inadvertent actuation by a patient lying on the litter **16**. In addition to the safety shrouds **87** and **97** preventing inadvertent actuation of the push buttons **84** and **86**, each of the push button switches **84**, **86** have a dual switch closing feature requiring both switch contacts to be closed (see FIG. **11**) in order to effect the desired operation as will be explained in more detail below.

The bight section **99** of the frame member **74**, particularly at the base of one of the spacers **79**, there is provided a bracket **101** secured to the bight section by a fastener **102** (FIG. **12**). A manually engageable handle **103** is pivotally secured to the bracket **102** by a pivot axle **104**. The handle includes a pair of arcuately spaced shoulders **106** and **107**. A cable support member **108** is pivotally secured to the bracket **101** by a pivot axle **109**. A cable, here a Bowden cable **111**, is fastened as at **112** to the cable support **108** (at one end) while the other end is fastened to a valve actuation device which will be explained in more detail below. The cable **111** extends into and through the hollow interior of the frame member **74**. The cable support member **108** has a pair of arcuately spaced shoulders **113** and **114** that operatively cooperate with the arcuate shoulders **106** and **107**, respectively, as will be explained in more detail below. The handle **103** as illustrated in FIG. **12**, is in a stowed out of the way position. When it is desired to move the handle and use it for operation of the ambulance cot, it is shifted clockwise in its position from the position illustrated in FIG. **12** to the position illustrated in FIG. **13** at which time the shoulder **107** engages the shoulder **114** on the cable support member **108**. When the handle **103** is further pivoted clockwise about the axle **104** to the position illustrated in FIG. **14**, the cable support member **108** will pivot about the axle **109** to effect a pulling of the cable **111** to effect actuation of a valve structure that will be described in more detail below. A torsional spring **116** (only the ends of which are illustrated in FIGS. **12-14**) serves to continually urge the handle **103** counterclockwise to the stowed position so that the shoulders **106** and **113** will engage one another.

Referring to FIG. **5**, and as stated above, there is provided a pair of longitudinally spaced brackets **71** on each of the side rails **66**. Between laterally spaced ones of the brackets **71**, there extends a respective cross rail **67**. Referring to FIG. **15**, these cross rails **67** support a hydraulic assembly bracket **121**. More specifically, the hydraulic assembly bracket **121** includes several ears **117** which operatively engage the respective cross rails **67** and from which ears is suspended the hydraulic assembly bracket **121**. The hydraulic assembly bracket **121** is generally U shaped with the bight section forming a base upon which is mounted a variable speed electric motor **122**, a hydraulic manifold plate **123** and a hydraulic pump **124**. The hydraulic pump **124** has two outlets **126** and **127**. The hydraulic outlets **126** and **127** are connected through hydraulic conduits **128**, **129**, respectively (FIG. **4**), to respective opposite ends of the hydraulic cylinder housing **54**. In this particular embodiment, the cross rails **67** also provide a support for a seat section **130** (FIG. **1**) on the litter **16**.

Referring to FIGS. **1** and **16**, the further X frame members **26**, **27**, **36** and **37** are all connected through respective connectors **28**, **29**, **38** and **39** to a cross rail **13**. FIG. **16** illustrates a representative example of the connectors **28**, **29**, **38** and **39**. That is, each connector includes a sleeve **118** that encircles the cross rail **13** and includes a stem **119** that is telescoped inside the interior of each of the respective further X frame members **26**, **27**, **36**, **37**. A bearing assembly **131** is provided between the stem **119** and the interior surface of the further X frame members **26**, **27**, **36**, **37**. Thus during normal use, off center loads and flex in the aluminum frame members may cause some twisting in the geometry of the frame members which will cause a binding of the mechanism. In order to accommodate this twist, the bearing assembly **131** will facilitate a relative rotation between the sleeve **118** and the further X frame members **26**, **27**, **36**, **37**. The bearing assembly **131** becomes particularly important when the X frame members **22**, **23**, **32**, **33** are not circular in cross section and the further X frame members **26**, **27**, **36**, **37** are circular in cross section (as depicted in FIG. **49**). That is, a bushing **236** is fixedly positioned inside the non-circular X frame members **22**, **23**, **32**, **33**, which bushing **236** has a circular opening therethrough through which the further X frame members **26**, **27**, **36**, **37** slidably extend. The end of the further X frame members **26**, **27**, **36**, **37** remote from the base **11** have a further bushing **237** longitudinally slidably disposed in the X frame members **22**, **23**, **32**, **33**. The bushing **237** is relatively moveably secured to the respective further X frame members **26**, **27**, **36**, **37**, such as through the use of a rivet and washer mechanism **238** being secured to the further X frame members **26**, **27**, **36**, **37** on opposite sides of the bushing **237** so as to prevent a relative longitudinal movement of the bushing **237** along the length of the further X frame members and so that the further X frame members can rotate about their respective longitudinal axes relative to the bushing **237**.

Hydraulic Circuit

A hydraulic circuit **132**, illustrated in FIGS. **17-23**, is included in the manifold plate **123** (FIG. **15**). It is to be understood that the pump **124** and the linear actuator **53** and the conduits carrying hydraulic fluid to the linear actuator **53** are preferably always filled with hydraulic fluid. Further, the pump **124** is reversible and the electric motor **122** driving same is also reversible. As a result, there will be no delay in actuation of the linear actuator in response to an operation of the pump **124** by the electric motor **122**. The output of the pump **124**, in one direction of operation, will supply hydraulic fluid through a pilot operated check valve **133** to the outlet **126** connected through the hydraulic conduit **128** to the end of the cylinder housing **54** remote from the reciprocal rod **56**. Operation of the pump **124** in the opposite direction will direct fluid through a poppet valve **134** having in parallel therewith an orifice or fluid throttle **136** and a two way poppet valve **137** to the outlet **127** which in turn is connected through a conduit **129** to the end of the cylinder housing **54** adjacent the reciprocal rod **56**. The fluid controlling the pilot operated check valve **133** is delivered to it through a conduit **138** connected to the fluid path intermediate the poppet valve **134**

and the pump **124**. There is also provided a pressure relief operated check valve **139** connected at one end between the pilot operated check valve **133** and the pump **124** and, at the other end, to a tank or reservoir for the hydraulic fluid. Intermediate the pilot operated check valve **133** and the outlet **126**, there is provided a fluid passageway **142** extending to a series connected pressure compensated flow controller **143**, a spring controlled check valve **144** and a two way poppet valve **146** connected to the tank **141**. The spring is sized in this check valve so as to provide a dampening against a surge of fluid when passively lowering. This prevents a lurch in the lowering action providing increased comfort to the patient during lowering. The passageway **142** includes a further passageway **147** connected through a spring biased check valve **148** to tank **141**, on the one hand and through a passageway **149** to a manual release valve **151** also connected to tank **141**. The outlet **127** is connected through a passageway **152** to a spring biased check valve **153** connected to the tank **141**, on the one hand, and through a passageway **154** to a series connected fluid throttle **156** and thence to a further manual release valve **157** connected to the tank **141**.

The hydraulic circuit **132** is controlled by a control mechanism **158**, which control mechanism is also schematically represented in FIGS. **24** and **25**. A hydraulic fluid pressure monitoring mechanism **159** is connected to the outlet **126** and provides a signal indicative of the magnitude of the fluid pressure to the control mechanism **158**. The battery **160** (FIGS. **47** and **48**) on board the ambulance cot provides power to the control mechanism **158**. The charged status of the battery **160** is linked to a display **161** on a user interface **162** mounted on the foot end lift handle assembly **72** near the battery mount **89**, particularly between the spacer members **79**. The user interface **162** also includes a mode switch (not illustrated) for allowing the user interface to display a multitude of different functions, one of which can be an hour meter indicative of the total elapsed time that the electrical motor **122** has been operated, such as "HH:MM", where H is hour and M is minute or in tenths of an hour such as "HH.H hours". Any other indication of total elapsed time from a set point is contemplated. In addition, it is also possible for the user interface to display the elapsed amount of time that the control **158** has been on, the elapsed amount of time a certain switch is activated, the elapsed amount of time certain valves have been actuated or the elapsed amount of time a certain pressure has been maintained on the system. These values may be combined to a suitable display to accurately determine the amount of wear that can be expected on the system. As a result, ambulance attendants can more accurately determine what preventative maintenance is required based upon the aforesaid displays. Additionally, a symbol (preferably iconic) can be provided at pre-programmed interval(s) to indicate when service may be necessary.

The control mechanism **158** also receives signals from position sensors provided on the ambulance cot. More specifically, and referring to FIG. **26**, a cover **163** has been removed from the housing **68** to reveal the opening **69** inside the housing. A first transducer **164** is provided inside the opening **69**, particularly at the foot end of the opening **69** whereas a second transducer **166** is oriented at the head end of the opening **69**. These transducers **164** and **166** are, in this embodiment, Hall effect sensors which are used to indicate the low and high heights of the ambulance cot. Alternatively, proximity sensors or reed switches can be employed in place of the Hall effect sensors. These transducers are adjustably positioned in the opening **69** such that they detect a magnetic field of a magnet mounted, for example, on one end of the pivot tube **61** (FIG. **5**) or on the slide bearing thereat (not shown) and oriented on the outboard side of the pinion gear **64** or slide bearing located thereat. Thus, as the pinion gear **64** approaches either one of the transducers **164** or **166**, the magnetic field of the magnet will saturate the respective transducer to create an appropriate signal to the control mechanism **158** that is indicative of the height position of the cot. The position of the transducers **164**, **166** are variable lengthwise of the opening **69** so as to provide an ability to effect a height adjustment for the ambulance cot in both its collapsed and its uppermost position. A specific advantage of having a movable second transducer **166** is that the high height of the ambulance cot can be adjusted to provide a stopping point custom adjusted to a specific ambulance for ease of loading the cot into the ambulance. A further transducer **167** is provided adjacent the second transducer **166** so as to cause an additional signal to be sent to the control mechanism **158**. This additional signal is supplied as feedback to the control mechanism **158** to subsequently control motor speed to effect a smooth stop of the litter **16** in the uppermost position. Similarly, a further transducer **168** can be provided adjacent the first transducer **164** so as to cause a further signal in the form of feedback to be sent to the control mechanism **158** to effect a subsequent controlling of motor speed to effect a smooth stop of the litter **16** in the lowered position. This smooth stopping operation is provided for patient comfort.

The control mechanism **158** also receives signals indicative of the presence of the ambulance cot inside the ambulance. In the preferred embodiment and referring to FIG. **27**, an ambulance cot latching mechanism inside the ambulance includes a rod **169** that extends along one side of the ambulance cot and has adjacent its distal end **171** a bracket **172** which has a magnet **173** provided thereon. The magnet **173** becomes positioned adjacent a transducer (not shown) to send a signal to the control mechanism **158** to effect a total and complete deactivation of the hydraulic lift or lower operation capabilities of the hydraulic circuit. This transducer may optionally be the position transducer **164**.

FIGS. **28-30** are a bottom view of the manifold plate **123** having mounted thereon the reversible electric motor **122** and the reversible pump **124**. If desired, the motor **122** could be driven in one direction and a transmission utilized to effect a reverse operation of the pump **124**. The release valves **151** and **157** are mounted on the manifold plate **123**. The release valve **151** includes a reciprocal stem **174** which, when moved to the right in the aforesaid figures, effects an opening of the valve to allow fluid flow to pass therethrough. Similarly, the release valve **157** has a stein **176** which, when moved to the right in the aforesaid drawing figures, also effects an opening of the valve **157** to allow hydraulic fluid to pass therethrough. Incrementally opening the valve will effect a variable flow through the valve, allowing variable drop rates of the litter. Additionally, the orifice **156** may be sized to control the drop rate of the base **11** when the litter **16** is supported by an attendant or plural attendants. A plate **177** is provided and has holes therethrough which receive the respective stems **174** and **176** therethrough so that an appropriate fastener **178** can effect a fastening of the respective stems **174** and **176** to the plate **177**. The cable **111** is connected to the plate as at **179**. The opposite end of the cable **111** is connected to the release handle mechanism illustrated in FIGS. **12-14**.

In this particular embodiment, and referring to FIG. **31**, the release valves **151** and **157** each have a fluid chamber **181** therein into which hydraulic fluid directly from the outlet port **126** is fed through an inlet port **183**. The valves **151** and **157** each have a reciprocal spool **184** therein, the movement of which is controlled by the tension applied to the stems **174**, **176** by the cable **111**. The spool **184** includes a land **186**

having a valve seat surface **187** thereon which mates with a valve seat surface **188** provided on the body **189** of the release valve **151**. A spring (not illustrated) serves to urge the valve seat surface **187** against the valve seat surface **188**, especially when no fluid pressure is applied to the chamber **181**. Once the fluid pressure inside the chamber **181** has been reduced to a desired level, tension applied to the cable **111** urging the spool **184** to the right (FIG. **31**) against the urging of the return spring, the seat surface **187** will be separated from the seat surface **188** to allow fluid to flow from the inlet port **183** to an outlet port **191** and thence to tank **141**. The purpose of the aforesaid construction of the valves **151** and **157** will facilitate it being necessary that the ambulance cot attendants lift the cot prior to activation of the manual release valves **151** and **157** so that the fluid pressure in the chamber **181** will be reduced to facilitate a rightward movement of the spool **184**.

A conventional velocity fuse **192** (FIG. **17**) is provided in the inlet port to the end of the cylinder housing **54** of the linear actuator **53**, particularly at the end thereof remote from the reciprocal rod **56**. The velocity fuse can also be an integral component of the cylinder housing **54**. This conventional velocity fuse is Model No. 8506 available from Vonberg Valve, Inc. of Rolling Meadows, Ill. The purpose of the velocity fuse is to prevent a rapid lowering of the cot when there is a sudden loss of hydraulic pressure as in the case of a severed hydraulic hose, or accidental manual release with a patient on the cot. A check-valve **195** is provided in parallel to the velocity fuse in order to affect an increased speed of extending of the base. This allows the same or similar speed in powered, and manual mode such that the manual mode may be used in normal use to extend the base when unloading the cot from the ambulance.

Wireless Diagnosis

The ambulance cot and load system electronics for facilitating a loading of the cot into an ambulance (see also WO 2004/064698, the subject matter of which is to be incorporated herein) contain the capability to interact with a handheld diagnostics tool over a wireless communication link. This tool allows manufacturing and maintenance personnel to perform basic configuration, troubleshooting and complex diagnostic operations on both the cot and load system, while remaining free from physical cable attachment to either unit. An example of the functional descriptions for each of the elements involved in wireless diagnostics are set forth below.

Wireless Diagnostic Tool

The handheld device or tool **300** (FIG. **34**) is self contained, and includes an antenna **301**, a wireless transmitter and receiver that operate under the same basic protocol as the wireless link connecting the cot and load system during normal operation. Operations such as collecting and configuring control parameters and initiating simple or complex diagnostics tests are supported through this interface. By design, this handheld device is capable of four main modes of operation:

- Two-way active communication mode: The handheld device interacts with one other wireless-capable unit;
- Multi-way active communication mode: The handheld device interacts with two or more wireless-capable units;
- Passive "listen only" mode: The handheld device observes the communication activity which exists near one or more wireless-capable units without disrupting it; and
- Power and at least one of read from and write to an RFID tag described below (can also be included in two-way communication).

Two-way active communication allows the handheld device to interact directly and exclusively with one cot (or one load system) in order to provide streamlined communication during programming or troubleshooting phases. Multi-way communication allows the handheld device to participate in communications with multiple other parties, and allows for more complex troubleshooting and diagnostics operations. For example, when a cot is docked in the load system and a handheld device is brought into proximity of the wireless communication field, it will be able to interact with both units to gather information or allow the user to invoke special tests to verify operation of the loading algorithm. For two-way and multi-way modes, the wireless diagnostic tool is capable of auto-detecting the proper mode in which to operate, which is based on the number of active participants it senses in the wireless communication field. The "listen only" mode is entered at the prompting of the user of the handheld device. This mode is passive in nature, and can be used to analyze communications coming from one unit (cot or load system), or multiple units which are in dialog with one another.

Cot

The ambulance cot's electronic controller contains software components to support wireless diagnostics capabilities. This software functionality is capable of detecting the difference between a load system that is trying to communicate and a wireless handheld device that is trying to initiate a diagnostic session. As this determination is made, the cot is able to enter into either a normal session with the load system, a dedicated session with the handheld device (if no load system is present), or a three-way session that involves both the handheld device and the load system. In the latter case, the cot software allows normal operation of the loading sequence, while simultaneously supporting a specific set of diagnostics that are useful in troubleshooting the overall system.

Load System

The load system's electronic controller is also capable of distinguishing between a basic communication session for loading and unloading, and a session which involves diagnostics operations. Using similar software components, the load system will participate in dedicated two-way communication with a handheld device, or allow the device to coexist during a load or unload operation with the cot being present. It is capable of detecting the difference between these various modes of operation, and react accordingly to provide the necessary functional behavior.

FIGS. **32** and **33** provide a further description of the software functionality used in the wireless control and diagnostics features. In FIG. **33**, the blocks entitled "Execute Configure Option" and "Transmit Wireless Response Message" include a read/write command to the RFID tag **302** (described below) when applicable in order to change the user statistics which may be coded on the RFID tag (Count of times programmer accessed, revision of software (if updated) etc).

Referring to FIG. **34**, beneath the seat section **130** there is provided a cot antenna **193**. The load arm on the ambulance (see WO 2004/064698, here in FIG. **34** the load arm **194**) includes a load arm antenna **196**. The two antennas **193** and **196** provide communication between the cot and the load system as well as communication with the handheld unit. The antennas also provide a controlled communication envelope to allow any cot to communicate with any load system or handheld trouble shooting device while not interfering with other load systems/cots in the area. In the preferred embodiment, the cot antenna **193** (FIG. **34**) consists of a loop of wire, as does the load antenna **196**, and the tool antenna **301**. It has been demonstrated that by passing a modulated current

through a loop of wire, an electro-magnetic field is produced that can be received by other loops of wire in the environment. It is further known that this modulated "carrier" can be added to a digital signal, allowing the transmission of the digital signal on the modulated carrier. This type of communication is commonly referred to as an active inductive link.

The cot antenna **193**, when configured as described, can additionally be used to remotely power and read a Radio Frequency Identification, or RFID tag **302** (FIG. **34**) mounted on the load arm **194** or a trolley **190** to which the load arm **194** is mounted. Thus, the cot can be configured to selectively communicate with one of the load system and the tool through an active, inductive link; and power and one of read from and write to the RFID tag **302**. The RFID tag **302** is useful in implementing the in-ambulance/in fastener shut-off feature (shown and described in more detail below) as well as for identifying the device for use with other specific RFID readers specifically as follows:

code (1 byte)	product code (2 bytes)	CRC (1 byte)	Product specific RFID tag . . .

More specifically:

Product name	Group name	Group (1 byte)	Product (2 bytes)	CRC
EMS_COT_LOADING_SYS	Medical_Beds	2	1	0x11

This information may be used to configure the hand-held tool, or provide contact information for service.

Additionally, other information may be at least one of written to and read from the RFID tag **302** including at least one of the following: Model, Serial number of the unit, Software revision, and Usage statistics (which may include at least one of a count of different powered cots used with the system, and a count of times diagnostic tools accessed or changed the cot or load system(s)).

One exemplary way of establishing communication between the cot and the fastener system or between the cot or load system and the troubleshooting handheld device, as well as communication therebetween, is set forth below.

Preamble	P0	P1	D0	P2	D1	D2	P3	D3	D4	D5	D6	D7	P

	Preamble for signal detection
Px	Parity bits for error detection (Hamming Code)
P	Parity bit for extra check of data integrity
Dx	Data bits

Preamble

The preamble is a special sequence to separate real data from the random noise. The preamble will contain special characters that are of 'illegal' length. This will cue the processor for a start of packet.

Error Correction Bits

The packet uses four bits for error correction (P**0**, P**1**, P**2**, P**3**). The error correction technique employs a Hamming code algorithm that will allow the processor to correct one bit that has been misinterpreted. Assuming a moderate bit error rate, the odds of a single bit being corrupted are relatively high while the odds of multiple bits being corrupted is relatively very low. Allowing for 1 bit to be corrected will result in an overall greater throughput at a relatively low cost of extra bits.

Parity Bit

The parity bit is an extra check to ensure data integrity. The parity bit is calculated using basic even parity checking; the parity bit is set so that the number of is in the packet will always be an even number. The parity bit will allow detection of a second bit error; however, it will not be able to correct it.

Data Bits

There are 8 data bits. The data bits communicate information about the cot status, an action request or diagnostic information. The most significant bit (D**7**) indicates whether the data is in diagnostic mode or not. If in diagnostic mode, remaining 7 bits indicate a diagnostic code or response. Otherwise each bit acts as an independent flag for a certain condition. If the transmission gets a response, the value is passed to the master controller; if no response is found, a value of '0'.

TABLE 1

Example of possible Ambulance to Cot Data Bits

Bit	Name	Value = 1	Value = 0
7	Normal/Diagnostic	In Normal Mode	In Diagnostic Mode
6	Arm Load	Detect load on arm	No load detected
5	Arm Up	Load arm is fully up	Load arm not fully up
4	Arm Down	Load arm is fully down	Load arm not fully down
3	Proximity Switch	Prox switch closed	Prox switch open
2	TBD		
1	TBD		
0	Comm present	Comm is active	No Comm

TABLE 2

Example of possible Cot to Ambulance Data Bits

Bit	Name	Value = 1	Value = 0
7	Normal/Diagnostic	In Normal Mode	In Diagnostic Mode
6	Cot load	Detect load on cot legs	No load detected
5	Cot legs up	Cot legs are fully up/not extended	legs not fully up
4	Cot legs down	Cot legs are fully down/extended	legs not fully down
3	Plus button	"+" button is pressed	"+" button not pressed
2	Minus button	"–" button is pressed	"–" button is not pressed
1	TBD		
0	Comm present	Comm is active	No Comm

TABLE 3

Example

Event	A → C	C → A	Comment
Cot "–" button pressed, turns on	—	111001xx	Patient on Cot, Ambulance not yet in range No response from Ambulance, a value of zero is passed to the cot controller
Cot moved within range of Ambulance	10010xxx	111001xx	"–" button is still pressed Prox switch is not set, Arm not bearing load

TABLE 3-continued

Event	Example A → C	C → A	Comment
Cot docked to prox switch	10011xxx	111001xx	"–" button is still pressed Prox switch is set, Arm not bearing load
Cot legs folding up, Cot drop slightly	11011xxx	110001xx	Arm starts to take weight, still down
Cot legs continue folding up	11001xxx	100001xx	Arm starts lifting up
Cot legs completely up	11001xxx	101001xx	Arm still lifting
Arm is all the Way up	11101xxx	101001xx	
Button is released Arm still up	11101xxx	101000xx	Waiting for cot to be pushed on

Further software may be provided for the in-ambulance/in-ambulance shut-off feature when used with an RFID tag **302**. When used with the load system (to detect the RFID tag), the upper-level software diagram may look like that illustrated in FIG. **59**.

In operation, and referring to FIG. **59**, upon power-up, the cot attempts communication with the load system in order to detect if it is present. If communication (com) is present, it executes function according to a specific and separate load protocol. If not, the cot communication will switch to check for the RFID tag. If it is not present, the cot drives according to the normal cot protocol. If the cot sees the RFID tag, it will then check for the low Hall Effect (HE) sensor (to determine if the cot legs are retracted). Once fully retracted, the cot inhibits driving (up), and thus activates the in-ambulance/in fastener shut-off feature. The advantages of looking for the Low HE sensor is allowing function of the cot while docked, but not fully loaded. It is reasonably assumed that once the cot is fully retracted, it is locked into the load system, and will be pushed into the ambulance. A further advantage is that normal drive function is returned by simply manually dropping the base such that the low HE sensor is no longer activated, thus allowing normal driving of the cot in the specific instance of a loss of load communication.

Driving normally is described in FIG. **25**, but FIGS. **60** and **61** illustrate the decision tree for the software when the RFID tag **302** is present in the overall system.

Retractable Head Section and Latch

By comparing FIGS. **35** and **36**, it will be noted that the ambulance cot **10** includes a retractable head section **197**. This feature can be provided on a manual lift cot or a power lift cot. In the power lift environment, and as is illustrated in FIG. **37**, the retractable head section **197** is generally U shaped, namely, having a pair of parallel legs **198** and **199** connected by a pair of brackets **202** to a head rail **203**. A cross brace **200** (FIG. **62**) also connects the brackets **202**. A tubular cross rail **201** is rotatably mounted to the cross brace **200**. The legs **198** and **199** are configured to be slidably received by, into the interior of (shown), next to, or below the respective longitudinally extending side rails **66** on the cot **10**. The handles **210** are fixed to the cross rail **201** for pivotal movement with the cross rail **201** about an axis corresponding to or parallel to the axis of the cross rail **201** in order to facilitate the movement of a pin **204** projecting from each handle **210** about an axis of rotation defined by or parallel to the axis of the cross rail **201**. The pin **204** extends through an arcuate slot **215** in the bracket **202**. The handles **210** are affixed such that actuation of one handle **210** effects a rotation of cross rail **201** and subsequent actuation of the other handle **210** so that the head section may be released by the actuation of a single handle **210**. The pin **204** is connected by a linkage **206** to a latch mechanism **207** on each leg **198** and **199**. The latch mechanism **207** is illustrated in more detail in FIGS. **42** and **43**. More specifically, the latch mechanism **207** includes a housing **208** in which a ramp mechanism **209** is slidably disposed lengthwise of the housing **208**. The ramp mechanism **209** includes a ramp surface **211** against which a pin **212** rests. The pin **212** includes a latch pin **213** that is configured to move laterally into and out of the housing **208**. The position located outside the housing is illustrated in FIGS. **37** and **42**. A spring (not illustrated) urges the pin **212** against the ramp surface **211**. When the handle **210** is rotated about the axis of rotation corresponding to or parallel to the longitudinal axis of the cross rail **201**, the pin **204** is moved from the position illustrated in FIG. **39** to the position illustrated in FIG. **40** to cause a leftward movement of the linkage **206** in each leg **198** and **199** to cause the pin **212** to shift in its position illustrated in FIG. **42** to the position illustrated in FIG. **43**, namely, a position wherein the latch pin **212** has been retracted laterally into the housing **208** of the latch mechanism **207**. A slot **205** in the link **206** is provided which allows independent, passive engagement of the latch pins **213** when the handles **210** are released. This is illustrated in FIG. **41**. A plurality of holes **214** are provided along the length of the side rails **66** and are configured to receive therein the latch pin **213** when in the extended position thereof as shown in FIG. **37**. These holes are located such that access to them is not possible, i.e., under a bumper provided on the exterior of the litter rail **66**. This is done for protection against inadvertent release, foreign matter, or potential pinching point. When the latch pin is received in an associated hole **214** provided in the side rail **66**, the retractable head section will be physically locked to the cot in either the retracted position (FIG. **35**) or the extended position (FIG. **36**).

In a further embodiment of the retractable head section **197**, shown in FIGS. **57-58** and **62**, the handles **210** are capable of being locked against rotation about the cross rail **201** to prevent release of the latch mechanism **207**. Referring to FIG. **57**, the safety bar **218** is fixed to a mounting bracket **260** that is pivotally mounted to the cross brace **200**. The mounting bracket **260** is biased into an at rest position by a torsion spring **261** mounted on the cross brace **200** and engaging the mounting bracket **260** and the bracket **202**. Reference is made to pending patent application Ser. No. 10/850,144, wherein the safety bar **218** can be rotated upwardly in a counterclockwise fashion, by an attendant, toward the head end of the ambulance cot to clear a hook mounted at the mouth of an ambulance cargo area. In the instant invention, the mounting bracket **260** is configured so that the safety bar **218** can also be rotated upwardly in a clockwise fashion toward the interior of the cot, and function as a "latch disabler" to prevent release of the latch mechanism **207**.

A head portion **262** of the mounting bracket **260** is received on the cross brace **200**. The head portion **262** is eccentrically configured about the cross brace **200** such that it includes a ramp portion **264** that extends toward the bracket **202** joining the leg **198** to the head rail **203**. The mounting bracket **260** is arranged underneath a shaft **266** formed in the bracket **202**. The shaft **266** is formed to extend into a central portion of the arcuate slot **215** that receives the pin **204** when the handle **210** is actuated. The shaft **266** is configured to received a pin **268** surrounded by a compression spring **270**. The pin **268** and spring **270** are arranged in the shaft **266** so that the pin is

biased out of the arcuate slot **215** by the spring **270**. The pin **268** is held within the shaft **266** by the head portion **262** of the mounting bracket **260**.

In FIGS. **57-58**, the pin **204** is shown in the at rest position, that is wherein the handles **210** are not actuated. In order for the handles **210** to be actuated, the pin **204** must travel along the arcuate slot **215**. During certain stages of transport, it is desirable to prevent the retractable head section **197** from changing its status from extended to retracted or vice versa. Therefore, it would be advantageous to prevent the inadvertent actuation of the handles **210**. This can be accomplished by preventing the travel of the pin **204** through the arcuate slot **215**, such as by pushing the pin **268** into the slot **215** to block the travel of the pin **204**.

Referring to FIG. **58**, the safety bar **218** has been rotated clockwise about the cross brace **200**. As the safety bar **218** rotates from the position shown in FIG. **57**, the pin **268** rides along the ramp portion **264** of the mounting bracket **260**. The ramp portion **264** is eccentrically configured, so that as the mounting bracket **260** rotates about the cross brace **200**, the radius of the head portion **262** increases, forcing the pin **268** through the shaft **266** and into a blocking position in the arcuate slot **215** as when the safety bar slides over an existing cot fastening mechanism in an ambulance. The safety bar **218** can rotate so that the pin **268** blocks the arcuate slot **215**, preventing the handles **210** from being actuated. Full engagement of the pin **268** occurs when the pin **268** reaches an end **269** of the ramp **264**. This occurs prior to a stop **272** of the mounting bracket **260** abutting the shaft **266**, which prevents further rotation of the safety bar **218**. The torsion springs **261** are mounted one on each side of the safety bar **218**, and act in torsion in opposing directions about cross brace **200**, urging the brackets **260** and the safety bar **218** to a downward, neutral position, whereby the latch disabler is disengaged.

Referring now to FIGS. **63-64**, the retractable head section **197** is configured to engage a portion of a cot fastening mechanism or "antler" system **276** configured for mounting to the floor of the cargo area of an ambulance. The antler system **276** includes a center yoke **278** and a forward yoke **280**. Both yokes **278**, **280** are mounted to the ambulance cargo area floor, with a centerline of the antler system **276** aligned in the fore-aft direction of the ambulance.

The center yoke **278** is formed of two rods **282**, **283** arranged as mirror images about the centerline of the antler system **276**. Each rod **282**, **283** includes a longitudinal segment **284**, **285** and an outwardly divergent segment **286**, **287**, each outwardly divergent segment rising to a rearwardly directed hook or "ear" **288**, **289**.

The forward yoke **280** includes a central segment **290** secured to the ambulance cargo floor and two outwardly divergent arms **291**, **292**. The arms each terminate in an "ear" **293**, **294** that is joined with a respective ear **288**, **289** of the center yoke **278**.

As the ambulance cot **10** is rolled into the ambulance cargo area head end first, as shown by the arrow in FIG. **63**, the safety bar **218** contacts the center yoke **278**. As the cot **10** is rolled further, the center yoke **278** forces the safety bar **218** rearwardly until the safety bar **218** rides on top of the longitudinal segments **284**, **285** of the rods **282**, **283** of the center yoke **278**. Again referring to FIG. **58**, the latch disabler is activated prior to the stop **272** reaching the shaft **266**. This enables use of the cot **10** with an antler system having a lower profile, while still activating the latch disabler. With the safety bar **218** in the rotated position of FIG. **64**, the latch disabler is activated, thereby locking the retractable head section **197** in the extended position. The latch disabler will remain activated until the ambulance cot **10** is removed from the antler system **276**. As the ambulance cot **10** is pushed further forward, the fixed wheels **216** roll between the ears **288**, **289** and **293**, **294** of the center and forward yokes **278**, **280** and the into the antler system **276**.

It is to be noted that the longitudinal axis of the side rails **66** are inclined to the horizontal at an angle α (see FIG. **35**) that is in the range of 1 to 10°. In this embodiment, the preferred angle is in the range of 2 to 3°. Thus, when the retractable head section **197** is retracted, the load wheels **216** on the retractable frame of the head section **197** are lifted from the ground surface **217** thereby enabling the cot to roll in any direction on the four castered wheels **14**. This is referred to as the "no steer" condition. When the retractable head section **197** is extended to the position illustrated in FIG. **36**, the load wheels **216** will engage the support surface **217** to provide a steering effect for the cot as it is moved over the surface **217** (a "steer" condition). In this particular embodiment, the load wheels **216** are each rotatable about a fixed horizontal axis of rotation. That is, the wheels **216** are not supported in a castered manner. The head section **197** must be in the extended position of FIG. **36** in order to be steered into the ambulance for engagement with the antler system **276**.

Folded Safety Bar

As is illustrated in FIG. **37**, the retractable head section **197** includes a safety bar **218**. The safety bar is configured to operatively engage a safety hook provided on the floor surface of a cargo area of an ambulance to prevent the cot from rolling completely out of the ambulance without an attendant being there to handle the head end of the cot. Reference is to be made to pending U.S. patent application Ser. No. 10/850,144, filed May 20, 2004, the subject matter of which is to be incorporated herein by reference. As is illustrated in FIGS. **44-46**, a modified safety bar **218**A can be provided which is foldable between the folded position illustrated in FIG. **45** and an unfolded position illustrated in FIG. **46**. That is, the safety bar **218**A includes two sections **219** and **221** interconnected by a pivot axle **222**. The safety bar sections **219** and **221** are approximately of the same length so that the pivot axle **222** is oriented at the midlength portion of the extended handle as is illustrated in FIG. **46**. Releasable locking pins **223** are provided to lock the handle sections **219** and **221** in the respective folded position (FIG. **45**) and the unfolded position (FIG. **46**). A push button release or removable pin or other means of release (not illustrated) is provided for facilitating an activation of the locking pins to unlock them and facilitate relative movement between the handle sections **219** and **221**.

Accessories

FIGS. **50-56** illustrate two accessories that can, if desired, be incorporated on the ambulance cot **10**. The first accessory is depicted in FIGS. **50-51** and is a hook **239** oriented within the cot perimeter and which, specifically, is secured to the underside of the raisable and lowerable fowler **241** on the ambulance cot **10**. The hook **239** consists of a sheet of material formed into a J with the stem of the J being secured to a cross rail **242** on the underside of the fowler **241** and the hook part **243** of the J facing toward the head end (left end) of the cot as depicted in FIGS. **50-51**. The hook **239** facilitates the hanging of various articles therefrom while the cot is in use.

The second accessory is depicted in FIGS. **52-56** and is a collapsible pouch **244** secured to and extending between the legs **198**, **199** of the head section **197** as well as to and extending between the cross rail **201** on the head section and

the cross rail **59** (FIG. **5**) on the litter frame **17**. As is shown in FIG. **54**, the pouch **244** consists of a planar sheet of fabric **237** to which are sewn plural fasteners **247** and **248** at spaced locations around the perimeter of the fabric sheet **246**. The fasteners **247** are looped around the cross rails **59** and **201** while the fasteners **248** are looped around the laterally space legs **198** on the head section. When the head section **197** is in the extended position shown in FIGS. **52** and **53**, the fabric sheet **246** is stretched between the longitudinally spaced cross rails **59** and **201** and laterally spaced legs **198** so as to provide a support surface **249**. When the head section **197** is retracted to the position illustrated in FIGS. **55** and **56**, the cross rails **59** and **201** become closely adjacent one another and the fabric sheet **246** is collapsed in an accordion style therebetween.

Operation

While the operative characteristics of the ambulance cot will be apparent to those skilled in the art upon reading the above set forth description and referring to the accompanying drawings, a discussion of the operational characteristics of the ambulance cot are set forth below for convenience.

When the ambulance cot is in the fully collapsed position, and referring to FIGS. **4** and **7**, an extension of the linear actuator **53** will cause a clockwise (FIG. **7**) rotation of the bracket **43** about the axis of the fastener **44**, the linear actuator being extended in the direction of the arrow **224**. The position of the fastener **44** (FIG. **4**) is determined by the fixed length linkage members **41**. As a result of this geometry, the amount of force in the direction of the arrow **224** is optimal and effects a rapid lifting of the litter **16** from the positions illustrated in FIGS. **3** and **4** through the mid-height position illustrated in FIG. **2** to the full height position of the litter illustrated in FIG. **1**. As the brackets **43** are lifted with continued extension of the linear actuator **53**, the further X frame members **32**, **33**, **36** and **37** will telescope outwardly to accommodate the changing height of the frame members **22** and **23** from the base **11**. In this particular embodiment, the pivot axle **24** for the two brackets **43** extend through the respective X frame members **22**, **23** and **32**, **33**. As a result, it is necessary to provide an elongate slot in each of the further X frame members **26**, **27** and **36**, **37** in order to accommodate the presence of the pivot axle **24**. It is to be recognized that a placement of the pivot axle **24** can be oriented at a location on the bracket **43** which will make it unnecessary to provide an axle receiving hole in each of the X frame members **23** and **33** as well as the elongate slots in the further X frame members **27** and **37**. This provides an advantage of increased strength and stiffness of the base. When the litter **16** is lowered to the position illustrated in FIG. **3**, mounts **226** (FIG. **1**) will operatively engage a cross rail provided on the underside of the litter **16** and additional mounts **227** will rest on the cross rail **13** on the base. The mounts **226** and **227** are oriented so that they are not readily accessible by attendants in the region of the ambulance cot and, therefore, pinching issues are avoided.

Referring to FIG. **11**, each push button switch **84**, **86** on the foot end lift handle assembly **72** requires two sets of switch contacts to be engaged in order to effect the desired command. That is, the set of contacts **228**, **229** must both be closed in order to effect, for example, a retraction of the reciprocal rod **56** into the cylinder housing **54**. Similarly, the two sets of contacts **231** and **232** of the switch **86** will effect an extension of the reciprocal rod **56** from the cylinder housing **54**.

Turning now to FIGS. **17-25**, the hydraulic circuit operation will now be described. Assuming the ambulance cot is in an ambulance and is now in the process of being removed from the ambulance, it is necessary to deploy the base from the position illustrated in FIG. **3** to the position illustrated in FIG. **1** and as taught in WO 2004/064698. Normally, the control **158** is in what is referred to as the "sleep" mode. Once a command is presented, such as by depressing the switch **86** to close the contacts **231** and **232**, such action is noted by the control **158** to effect a powering up of the circuit to effect an opening of the valve **137** (Valve A) to shift the valve from its FIG. **17** position to the FIG. **18** position. The control will also make inquiry concerning whether the high top sensors **166** and **167** have been detected (see FIG. **25**) and, if not, the electric motor **122** is ramped in to effect a driving of the hydraulic pump **124**. As soon as the motor reaches its maximum speed, the motor is continued to operate driving the pump at maximum speed until the sensor **167** is detected at which time the speed of the motor is ramped down or gradually slowed until the high top sensor **166** is detected, at which time the motor is brought to a stop. If the contacts **231** and **232** remain closed, the motor will remain stopped until the button **86** has been released by the attendant. Rapid uncontrolled deployment of the base from the FIG. **3** position to the FIG. **1** position is prevented by the orifice **136** in the valve **134** (Valve F). The attendant can thereafter "jog" the litter further upwardly by pressing the switch. In this case, the controller will activate the motor for a short interval of time, allowing incremental upward movement of the litter.

FIG. **19** illustrates a lowering of the litter from the FIG. **1** position toward the FIG. **3** position. In this instance, the switch **84** is actuated to close the contacts **228** and **229** to cause an opening of the valve **146** (Valve B). It will be noted that fluid flows out of the closed end of the linear actuator **53** through the pressure compensated flow control valve **143**, through the check valve **144**, through the opened Valve B to tank **141**. The hydraulic fluid enters the rod end of the linear actuator **53** by sucking same out of the tank **141** through a check valve **153**. In this particular situation, operation of the motor **122** is not required and hence is not activated. If the litter of the ambulance cot is lifted (no weight on the base of the ambulance cot), the pressure switch **159** will detect the lifting by reason of a reduced pressure and as long as the switch **84** and the contacts **228** and **229** thereof remain closed, the motor **122** will be activated and driven in the opposite direction of rotation to effect a rapid driving of fluid into the rod end of the linear actuator **53** to rapidly collapse the cot. Prior to this occurring, however, the Valve B will be returned to its initial position illustrated in FIG. **17** as will Valve A. Alternatively, a separate switch (not shown) can be provided for effecting the same rapid collapse of the cot. Since less hydraulic fluid is required in the rod end of the linear actuator **53** by reason of the presence of the reciprocal rod **56** than is required at the opposite end of the cylinder housing **54**, excess fluid will need to be bled from the closed end of the cylinder housing and this is accomplished through the high pressure side of the pump feeding a pressurized signal to open the check valve **133** and the check valve **139** to facilitate a bleeding of some of the hydraulic fluid to tank during the time that the base frame **11** is rapidly raised by the hydraulic circuit. Once the low position sensor is detected, the speed of the motor is gradually reduced until the lowermost sensor **164** is detected at which time the motor is brought to a halt. If the push button switch **84** remains activated, the motor will remain stopped until the attendant releases the manual engagement of the button **84**. The attendant can thereafter "jog" the litter further downwardly by pressing the switch. In this case, the controller will activate the motor for a short interval of time, allowing incremental downward movement of the litter.

The operative characteristics illustrated in FIG. **21** are similar to those depicted in FIG. **18**. Even when the motor **122** is activated to drive the pump **124**, the orifice or throttle **136** limits the amount of fluid that can be driven so that the base unit does not uncontrollably fall away from the litter when it is being lifted by the ambulance attendants.

In the situation where there is a loss of electrical function, it must be possible to operate the ambulance cot manually. In addition, a weep valve **233** is provided at the rod end of the cylinder housing **54** to cause a pressure relief to occur when the rod is fully extended. That is, hydraulic fluid inside the cylinder housing **54** will communicate with the outlet **127** to limit the pressure buildup inside the cylinder housing **54**. In view of the construction of the valves **151** and **157**, with weight on the cot **10**, the handle **103** and the valve **157** are allowed to operate, as FIGS. **12-14** and FIG. **29** indicate. Since the pressure is high in the chamber **181** of the valve **151**, the valve **151** will not shift (as shown in FIG. **29**) in response to an operative movement of the handle **103** and the litter **16** of the cot **10** will not lower. On the other hand, when weight on the litter **16** is removed by the attendant or plural attendants lifting the litter **16** away from the base frame **11**, the hydraulic pressure in the chamber **181** of the valve **151** is reduced to facilitate an easy movement of the land **186** and the valve seat surface **187** thereon (FIG. **31**) away from the valve seat surface **188** in order to facilitate the operation of the valve **151** simultaneously with the valve **157** (FIGS. **28-30**, particularly FIG. **30**). That is, fluid flows from the closed end of the linear actuator **53** to tank through the valve **151** whereas hydraulic fluid is siphoned from the tank **141** into the rod end of the linear actuator **53** to effect a lowering of the litter **16** relative to the base frame **11**. Similarly, and assuming that electrical function has still been disrupted and it is desired to deploy the base from the FIG. **3** position to the FIG. **1** position, the attendants will need to lift the cot while simultaneously operating the handle **103** causing the weight of the base frame **11** to effect a drawing of fluid from the tank into the closed end of the linear actuator **53** while the hydraulic fluid in the rod end of the linear actuator **53** extends through the open valve **157** to tank.

Although particular preferred embodiments of the invention have been disclosed in detail for illustrative purposes, it will be recognized that variations or modifications of the disclosed apparatus, including the rearrangement of parts, lie within the scope of the present invention.

What is claimed is:

1. An ambulance cot, comprising:

a base frame;

a litter frame; and

an X-frame support mechanism interconnecting said base frame and said litter frame and being configured to support said litter frame in one of a plurality of positions relative to said base frame, said support mechanism including at least one pair of frame members pivotally secured to each other proximate the mid-length thereof, said frame members each having opposite ends respectively secured to one of said base frame and said litter frame, said at least one of said pair of frame members having a first mount oriented between said mid-length thereof and said base, said at least one of said pair of frame members having a second mount oriented between said mid-length thereof and said litter frame, said first and second mounts being configured to respectively engage said **[**base**]** *litter* frame and said **[**litter**]** *base* frame in response to said litter frame becoming proximate said base frame; and

wherein said **[**base**]** *litter* frame has longitudinally extending side rails and at least one first crosswise member interconnecting said side rails **[**and**]** *of said litter frame, said first mount* being oriented in a path of movement of said first **[**mount**]** *crosswise member* as said litter frame becomes proximate said base frame so that said first **[**mount**]** *crosswise member* engages and rests upon said **[**at least one**]** first **[**crosswise member**]** *mount*, and wherein said **[**litter**]** *base* frame has longitudinally extending side rails and at least one second crosswise member interconnecting said side rails of said **[**litter**]** *base* frame and being oriented in a path of movement of said second mount as said litter frame becomes proximate said base frame so that said second mount engages and rests upon said at least one second crosswise member.

2. The ambulance cot according to claim **1**, wherein said first and second mounts each engage **[**and rest upon**]** respective ones of said at least one first and second crosswise members and between the respective said side rails of said litter frame and said base frame.

3. An ambulance cot, comprising:

a base frame;

a litter frame; and

an X-frame support mechanism interconnecting said base frame and said litter frame and being configured to support said litter frame in one of a plurality of positions relative to said base frame, said support mechanism including at least one pair of frame members pivotally secured to each other proximate the mid-length thereof, said at least one pair of frame members each having opposite ends respectively secured to one of said base frame and said litter frame, at least one of said pair of frame members having a first mount oriented between said mid-length thereof and said **[**base**]** *litter* frame, said first mount being configured to **[**respectively**]** engage said base frame in response to said litter frame becoming proximate said base frame; and

wherein said base frame has longitudinally extending side rails and at least one crosswise member interconnecting said side rails and being oriented in a path of movement of said first mount as said litter frame becomes proximate said base frame so that said first mount engages and rests upon said at least one crosswise member.

4. The ambulance cot according to claim **3**, wherein said first mount engages and rests upon said at least one crosswise member **[**and**]** between the respective said side rails of said base frame.

5. An ambulance cot, comprising:

a base frame;

a litter frame; and

an X-frame support mechanism interconnecting said base frame and said litter frame and being configured to support said litter frame in one of a plurality of positions relative to said base frame, said support mechanism including at least one pair of frame members pivotally secured to each other proximate the mid-length thereof, said at least one pair of frame members each having opposite ends respectively secured to one of said base frame and said litter frame, at least one of said pair of frame members having a first mount oriented between said mid-length thereof and said **[**litter**]** *base* frame, said first mount being configured to **[**respectively**]** engage said litter frame in response to said litter frame becoming proximate said base frame; and

wherein said litter frame has longitudinally extending side rails and at least one crosswise member interconnecting

said side rails [and], *said first mount* being oriented in a path of movement of said [first mount] *at least one crosswise member* as said litter frame becomes proximate said base frame so that said [first mount] *at least one crosswise member* engages and rests upon said [at least one crosswise member] *first mount*.

6. The ambulance cot according to claim **5**, wherein said first mount engages and rests upon said at least one crosswise member [and] between the respective said side rails of said litter frame.

* * * * *