UNITED STATES PATENT AND TRADEMARK OFFICE

BEFORE THE PATENT TRIAL AND APPEAL BOARD

AYLO FREESITES LTD and FUBOTV MEDIA INC.,
Petitioner,

v.

DISH TECHNOLOGIES L.L.C.,
Patent Owner.

IPR2024-00044
U.S. PATENT NO. 11,470,138 B2[1]
ATTORNEY DOCKET NO.: 081841.0167

PATENT OWNER'S NOTICE OF APPEAL

Mail Stop PATENT BOARD
Patent Trial and Appeal Board
United States Patent and Trademark Office
PO Box 1450
Alexandria, Virginia 22313-1450
Submitted Electronically via the Patent Trial and Appeal Case Tracking System

---

[1] fuboTV Media Inc., which filed a petition in IPR2024-00902, has been joined as a petitioner in this proceeding.

Please take notice that under 35 U.S.C. §§ 141(c), 142, 319 and 37 CFR §§ 90.2(a), 90.3(a), Patent Owner, DISH Technologies L.L.C. ("DISH") hereby appeals to the United States Court of Appeals for the Federal Circuit from the Patent Trial and Appeal Board's ("PTAB") Final Written Decision in IPR2024-00044, entered April 14, 2025 (Paper 60)[2] (the "Final Written Decision"). A request for Director Review of the Final Written Decision was denied on August 28, 2025 (Paper No. 67), and a request for Rehearing of Final Written Decision was denied on October 6, 2025 (Paper 70). This appeal is timely under 37 C.F.R. § 90.3(a) and Rule 4(a)(3) of the Federal Rules of Civil Procedure as it is filed no later than sixty-three (63) days of the Order denying the request for Rehearing of the Final Written Decision.

In accordance with 37 C.F.R. § 90.2(a)(3)(ii), Patent Owner identifies the following issues on appeal:

1. The Board's conclusion that claims 1, 3–5, 7, 14–17, 22–25, and 27–29 of U.S. Patent No. 11,470,138 (the "'138 patent) were shown to be unpatentable;
2. The Board's conclusion that neither Ogdon nor Allen teach away from their proposed combination;

[2] A public version of the Final Written Decision published as Paper 63.

3. The Board's conclusion that Patent Owner failed to establish a nexus between the merits of the claimed invention and the objective indicia of nonobviousness; and
4. Any Board or Director finding, determination, judgment, or order supporting or related to the Final Written Decision and decided adversely to DISH.

Simultaneous with this submission, a copy of this Notice of Appeal is being filed electronically with the Office of the General Counsel for the United States Patent and Trademark Office. In addition, a copy of this Notice of Appeal, along with the required docketing fees, are being electronically filed with the Clerk's Office for the United States Court of Appeals for the Federal Circuit.

Respectfully Submitted,

October 7, 2025

/s/ Eliot D. Williams

Eliot D. Williams (Reg. No. 50,822)
Andrew Wilson (Reg. No. 74,093)
Jamie R. Lynn (Reg. No. 63,666)
BAKER BOTTS L.L.P.
700 K Street, N.W.
Washington, D.C. 20001
202.639.1334
202.639.1312
202.639.7786

G. Hopkins Guy III (Reg. No. 35,886)
BAKER BOTTS L.L.P.
1001 Page Mill Road, Bldg. 1, Suite 200
Palo Alto, California 94304-1007
650.739.7500

Ali Dhanani (Reg. No. 66,233)
Thomas B. Carter Jr. (Reg. No. 76,040)
Zacharias E. Shepard (Reg. No. 83,358)
BAKER BOTTS L.L.P.
910 Louisiana St.
Houston, TX 77002
713.229.1108
713.229.1505
713.229.6234

Attorneys for Patent Owner, DISH Technologies L.L.C.

CERTIFICATE OF SERVICE

Pursuant to 37 C.F.R. §§ 42.6 and 90.2(a)(1)(ii), the undersigned certifies that on October 7, 2025, the foregoing **NOTICE OF APPEAL** was served on counsel of record for Petitioners by filing this document through P-TACTS, and by electronic mail sent to the following addresses:

FMGasparo@venable.com

IGPaquette@venable.com

PTSheng@venable.com

PGZimmerman@venable.com

Inge.osman@lw.com

Tara.elliott@lw.com

Rick.frenkel@lw.com

Rebecca.rabenstein@lw.com

Fubotv_masterclassiprs.lwteam@lw.com

Further, pursuant to 37 C.F.R. § 90.2(a)(1)(i), the undersigned certifies that a true and correct copy of this Notice of Appeal was filed with the Director of the USPTO by electronic mail sent to: efileSO@uspto.gov

Further, pursuant to 37 C.F.R. § 90.2(a)(2), the undersigned also certifies that a true and correct copy of this Notice of Appeal was filed electronically with the Clerk's Office of the United States Court of Appeals for the Federal Circuit.

October 7, 2025

/s/ Eliot D. Williams

Eliot D. Williams (Reg. No. 50,822)
Andrew Wilson (Reg. No. 74,093)
Jamie R. Lynn (Reg. No. 63,666)
BAKER BOTTS L.L.P.
700 K Street, N.W.
Washington, D.C. 20001
202.639.1334
202.639.1312
202.639.7786

G. Hopkins Guy III (Reg. No. 35,886)
BAKER BOTTS L.L.P.
1001 Page Mill Road, Bldg. 1, Suite 200
Palo Alto, California 94304-1007
650.739.7500

Ali Dhanani (Reg. No. 66,233)
Thomas B. Carter Jr. (Reg. No. 76,040)
Zacharias E. Shepard (Reg. No. 83,358)
BAKER BOTTS L.L.P.
910 Louisiana St.
Houston, TX 77002
713.229.1108
713.229.1505
713.229.6234

Attorneys for Patent Owner, DISH Technologies L.L.C.

Trials@uspto.gov
571-272-7822

Paper 60
Entered: April 14, 2025

UNITED STATES PATENT AND TRADEMARK OFFICE

BEFORE THE PATENT TRIAL AND APPEAL BOARD

AYLO FREESITES LTD and FUBOTV MEDIA INC.,
Petitioner,

v.

DISH TECHNOLOGIES L.L.C.,
Patent Owner.

IPR2024-00044[1]
Patent 11,470,138 B2

Before THU A. DANG, MICHELLE N. WORMMEESTER, and JOHN A. HUDALLA, *Administrative Patent Judges*.

HUDALLA, *Administrative Patent Judge*.

JUDGMENT
Final Written Decision
Determining Some Challenged Claims Unpatentable
Striking Certain Evidence and Arguments
Dismissing-in-Part Petitioner's Motion to Exclude
35 U.S.C. § 318(a); 37 C.F.R. §§ 42.23(b), 42.64(c)

---

[1] fuboTV Media Inc., which filed a petition in IPR2024-00902, has been joined as a petitioner in this proceeding.

Aylo Freesites Ltd ("Aylo") filed a Petition (Paper 1, "Pet.") requesting an *inter partes* review of claims 1, 3–12, 14–20, 22–25, and 27–29 ("the challenged claims") of U.S. Patent No. 11,470,138 B2 (Ex. 1001, "the '138 patent"). DISH Technologies L.L.C. ("Patent Owner") filed a Preliminary Response (Paper 6). Taking into account the arguments presented by Patent Owner in the preliminary record, we determined that the information presented in the Petition established that there was a reasonable likelihood that Aylo would prevail with respect to at least one of the challenged claims. Pursuant to 35 U.S.C. § 314, we instituted this proceeding on April 16, 2024, as to all challenged claims and all grounds of unpatentability presented in the Petition. Paper 9 ("Dec. on Inst.").

fuboTV Media Inc. ("fuboTV") subsequently filed a similar petition and motion for joinder in IPR2024-00902. *See* IPR2024-00902, Papers 2, 3. We instituted an *inter partes* review and joined fuboTV as a petitioner to this proceeding in a limited capacity. *See* IPR2024-00902, Paper 7. Henceforth, we refer collectively to Aylo and fuboTV as "Petitioner."

During the course of trial, Patent Owner filed a Patent Owner Response (Paper 19, "PO Resp."), and Petitioner filed a Reply to the Patent Owner Response (Paper 37, "Pet. Reply"). Patent Owner also filed a Sur-reply (Paper 47, "PO Sur-reply"). A consolidated oral hearing with IPR2024-00043, IPR2024-00045, IPR2024-00046, and IPR2024-00146 was held on January 16, 2025, and a transcript of the hearing is included in the record. Paper 59 ("Tr.").

Petitioner filed a motion to exclude certain evidence. Paper 49 ("Exclude Mot."). Patent Owner filed an opposition (Paper 50, "Exclude Opp.") and Petitioner filed a reply (Paper 51, "Exclude Reply").

Petitioner filed declarations of Henry Houh, Ph.D., with its Petition (Ex. 1003) and Reply (Ex. 1028). Patent Owner filed declarations of Dr. Kevin Jeffay (Ex. 2006) and Robert Drew Major (Ex. 2010) with its Response. Patent Owner also filed a declaration of David R. Ericson with its opposition to Petitioner's Motion to Exclude. Ex. 2090. The parties also filed the transcripts of the depositions of Dr. Houh (Exs. 2009, 2091), Dr. Jeffay (Ex. 1030), Mr. Major (Ex. 1021), and Mr. Ericson (Ex. 2092).

We have jurisdiction under 35 U.S.C. § 6. This decision is a Final Written Decision under 35 U.S.C. § 318(a) as to the patentability of claims 1, 3–12, 14–20, 22–25, and 27–29 of the '138 patent. For the reasons discussed below, Petitioner has demonstrated by a preponderance of the evidence that claims 1, 3–5, 7, 14–17, 22–25, and 27–29 of the '138 patent are unpatentable. Petitioner has not demonstrated by a preponderance of the evidence that claims 6, 8–13, and 18–20 of the '138 patent are unpatentable. We additionally strike certain materials in response to Petitioner's Motion to Exclude. Otherwise, we dismiss-as-moot Petitioner's Motion to Exclude.

I. BACKGROUND

A. Real Parties-in-Interest

Aylo identifies Aylo Freesites Ltd (f/k/a MG Freesites Ltd), Aylo Premium Ltd (f/k/a MG Premium Ltd), and Aylo Billing Limited (f/k/a MG Billing Limited) as the real parties-in-interest. Pet. 1. fuboTV identifies fuboTV Media Inc. as the real party-in-interest. IPR2024-00902, Paper 2, 1. Patent Owner identifies DISH Technologies L.L.C. and Sling TV L.L.C., as well as EchoStar Corporation, as the real parties-in-interest. Paper 4, 2; Paper 8, 2 (Patent Owner's Updated Mandatory Notices).

B. Related Matters

As required by 37 C.F.R. § 42.8(b)(2), the parties identify various related matters. Pet. 1–2; Paper 4, 2–4; Paper 8, 2–3; Paper 12, 1–3; Paper 13, 1; Paper 48, 1; Paper 56, 1.

Furthermore, both parties reference an investigation of the International Trade Commission (ITC) under 19 U.S.C. § 1337 styled *In the Matter of Certain Fitness Devices, Streaming Components Thereof, and Systems Containing Same*, Inv. No. 337-TA-1265 (ITC instituted May 13, 2021) ("the ITC Investigation"). *See* Pet. 10, 13–18, 60–61; PO Resp. 65–66; PO Sur-reply 20, 24–25. Petitioner states that iFIT, Inc. and Patent Owner were involved in the ITC Investigation, and Petitioner notes that it was not involved. Pet. 13. Petitioner also notes that the ITC Investigation involved "family members" of the '138 patent. *Id.*

C. The '138 Patent

The '138 patent is directed to "adaptive-rate shifting of streaming content" over packet-switched networks such as the Internet. Ex. 1001, 1:31–34. The '138 patent addresses a purported need to "utilize multiple connections between a source and destination, requesting varying bitrate streams depending upon network conditions." *Id.* at 2:64–67.

Figure 1 of the ’138 patent is reproduced below.

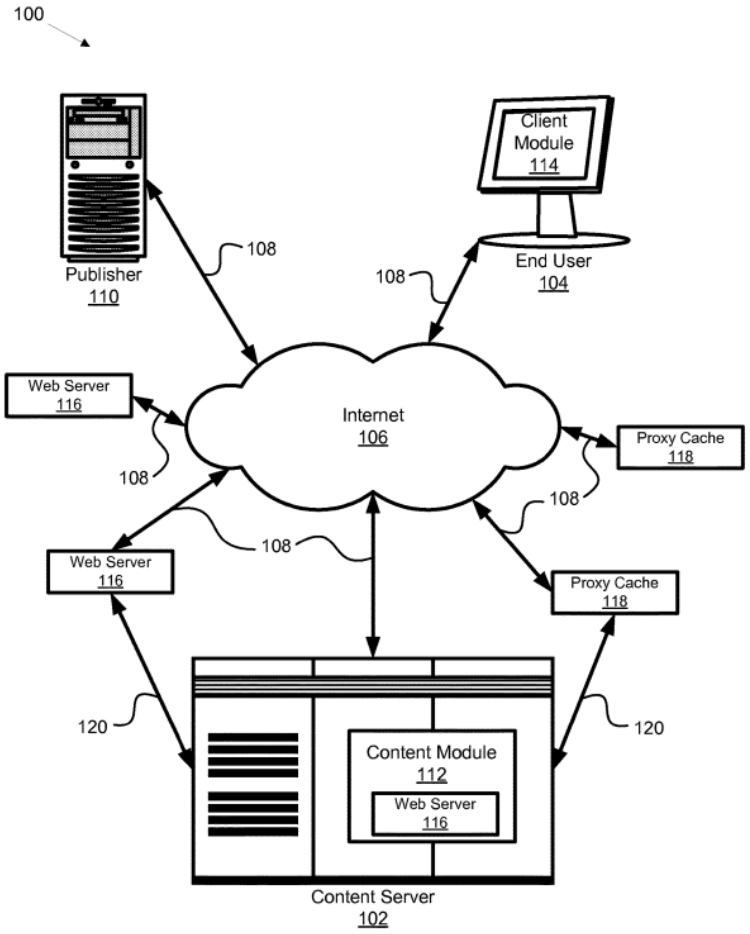

FIG. 1

Figure 1 depicts “system 100 for dynamic rate shifting of streaming content.” Ex. 1001, 6:33–35. System 100 includes content server 102, end user station 104, publisher 110, and web server 116. *Id.* at 6:36–52. Content may be transferred over Internet 106 to content server 102, and content from content server 102 may be replicated to other web servers 116. *Id.* at 6:56–58, 7:1–2.

Figure 2b of the ’138 patent is reproduced below.

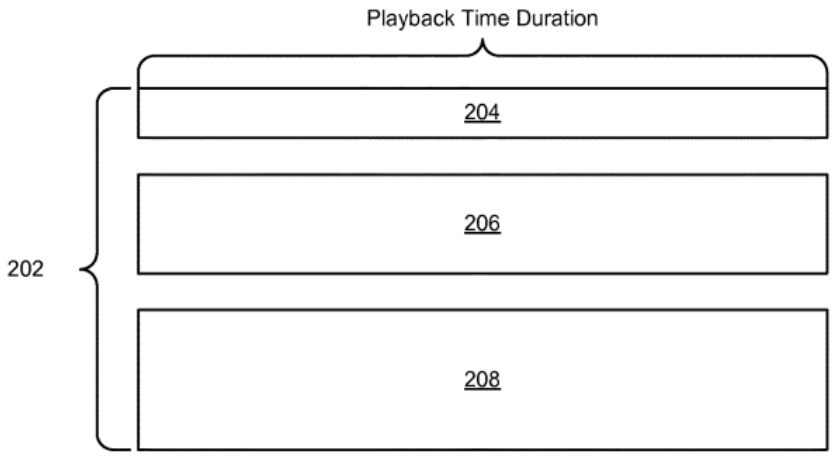

FIG. 2b

Figure 2b depicts “a plurality of streams 202 having varying degrees of quality and bandwidth.” Ex. 1001, 7:25–27. Streams 202 comprise low quality stream 204, medium quality stream 206, and high quality stream 208, and each of streams 204, 206, 208 is a copy of content file 200 encoded and compressed to varying bit rates. *Id.* at 7:27–31.

Figure 3a of the ’138 patent is reproduced below.

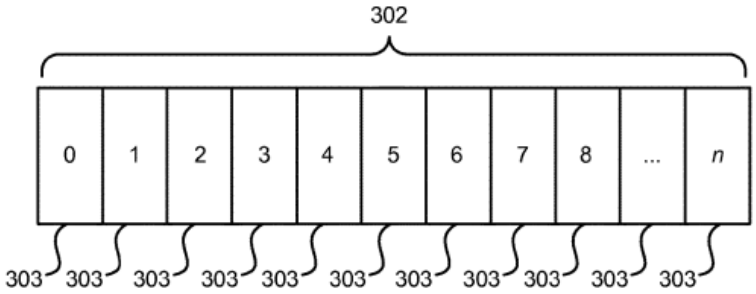

FIG. 3a

Figure 3a depicts "stream 302 divided into a plurality of source streamlets 303," which are "any sized portion[s] of the content file 200." Ex. 1001, 7:37–40.

Figure 3b of the '138 patent is reproduced below.

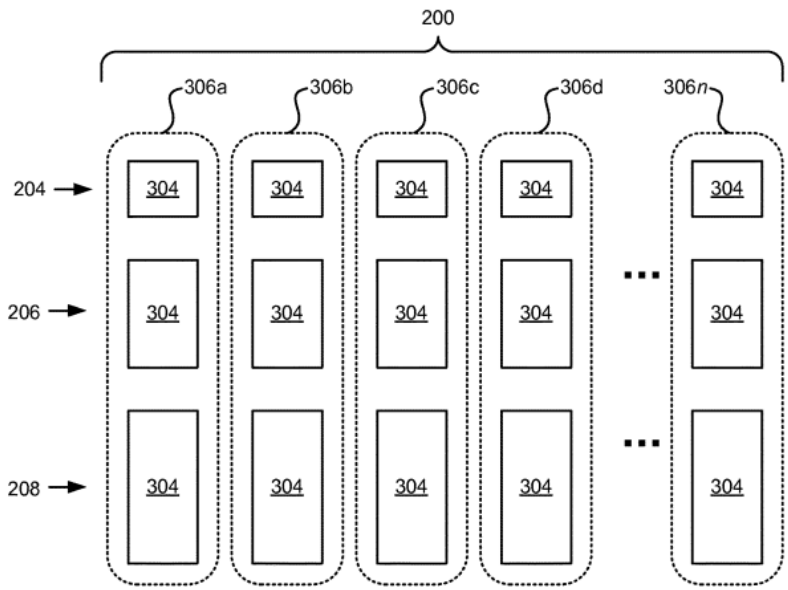

FIG. 3b

Figure 3b depicts "sets 306 of streamlets." Ex. 1001, 7:55–56. A "set" is a "group of streamlets having identical time indices and durations but varying bitrates." *Id.* at 7:57–59. For example, "set 306a includes encoded streamlets 304 having low, medium, and high 204, 206, 208 bitrates." *Id.* at 7:61–62.

The application that led to the '138 patent was filed on May 18, 2020, and claims priority to, *inter alia*, a provisional application that was filed on April 30, 2004. Ex. 1001, codes (22), (60); *see also* Pet. 8, 12 (noting same). Petitioner assumes a priority date of April 30, 2004, for purposes of this

proceeding (Pet. 12), so we apply that date for determining whether the asserted references qualify as prior art.

D. Illustrative Claim

Of the challenged claims, claims 1, 14, 23, and 28 are independent. Claims 3–12 depend directly or indirectly from claim 1, claims 15–20 and 22 depend directly or indirectly from claim 14, claims 24, 25, and 27 depend directly or indirectly from claim 23, and claim 29 depends directly or indirectly from claim 28. Claim 1 is illustrative of the challenged claims and recites:

> 1. A system for adaptive-rate content streaming of a video that is playable on one or more end user stations over the internet, the system comprising:
>
> at least one storage device storing the video, wherein the video is digitally encoded at a plurality of different bitrates creating a plurality of streams including a low quality stream, a medium quality stream, and a high quality stream, the low quality stream, the medium quality stream, and the high quality stream each comprising a group of streamlets, wherein each streamlet corresponds to a portion of the video, and wherein each streamlet in each group of streamlets is encoded at a respective one of the plurality of different bitrates, and wherein each group of streamlets comprises at least first and second streamlets;
>
> wherein at least one of the low quality stream, the medium quality stream, and the high quality stream is encoded at a bitrate of no less than 600 kbps; and
>
> wherein the first streamlet of each of the groups of streamlets has the same first duration and encodes the same first portion of the video in each of the low quality stream, the medium quality stream, and the high quality stream, and wherein the first streamlet of the low quality stream encodes the

> same first portion of the video at a lower bitrate than the first streamlet of the high quality stream and the first streamlet of the medium quality stream.

Ex. 1001, 18:24–50.

E. Prior Art

Petitioner relies on the following prior art:

U.S. Patent No. 6,161,137, filed Mar. 31, 1998, issued Dec. 12, 2000 (Ex. 1004, "Ogdon");

International Patent Publication No. WO 02/075482 A2, filed Mar. 15, 2002, published Sept. 26, 2002 (Ex. 1005, "Allen"); and

Synchronized Multimedia Integration Language (SMIL 2.0), published Aug. 7, 2001 (Ex. 1006, "SMIL 2.0").

F. The Instituted Grounds

We instituted *inter partes* review of claims 1, 3–12, 14–20, 22–25, and 27–29 of the '138 patent on the following grounds (Dec. on Inst. 43), which are all the grounds presented in the Petition (Pet. 3–4):

Claims Challenged	35 U.S.C. §	References
1, 3–12, 14–20, 22–25, 27–29	103(a)[2]	Ogdon, Allen
1, 3–12, 14–20, 22–25, 27–29	103(a)	Ogdon, Allen, SMIL 2.0

[2] The Leahy-Smith America Invents Act ("AIA"), Pub. L. No. 112-29, 125 Stat. 284, 287–88 (2011), amended 35 U.S.C. §§ 102 and 103. Because the '138 patent claims priority to an application filed before March 16, 2013 (the effective date of the relevant amendments), we assume that the pre-AIA versions of §§ 102 and 103 apply. However, our decision would be the same under the current version of the statutes.

II. ANALYSIS

A. Legal Standards

A claim is unpatentable under 35 U.S.C. § 103(a) if the differences between the claimed subject matter and the prior art are such that the subject matter, as a whole, would have been obvious at the time the invention was made to a person having ordinary skill in the art to which said subject matter pertains. *See KSR Int'l Co. v. Teleflex Inc.*, 550 U.S. 398, 406 (2007). The question of obviousness is resolved on the basis of underlying factual determinations, including (1) the scope and content of the prior art; (2) any differences between the claimed subject matter and the prior art; (3) the level of skill in the art; and (4) where in evidence, so-called secondary considerations. *See Graham v. John Deere Co.*, 383 U.S. 1, 17–18 (1966). We also recognize that prior art references must be "considered together with the knowledge of one of ordinary skill in the pertinent art." *In re Paulsen*, 30 F.3d 1475, 1480 (Fed. Cir. 1994) (citing *In re Samour*, 571 F.2d 559, 562 (CCPA 1978)).

B. Level of Ordinary Skill in the Art

Citing testimony from Dr. Houh, Petitioner contends a person of ordinary skill in the art "would have had at least a B.S. degree in computer science or electrical engineering (or comparable degree) and two years of experience in networking or streaming media, or a M.S. in computer science or electrical engineering (or comparable degree)." Pet. 12 (citing Ex. 1003 ¶ 45). Patent Owner does not present any arguments regarding the level of

ordinary skill in the art.[3] In our Decision on Institution, we adopted Petitioner's definition of the level of ordinary skill in the art. Dec. on Inst. 9–10.

We again adopt Petitioner's definition of the level of ordinary skill in the art. We are satisfied that this definition of the level of skill is consistent with the teachings of the '138 patent and the asserted prior art.

C. Claim Interpretation

In an *inter partes* review, we construe each claim

> using the same claim construction standard that would be used to construe the claim in a civil action under 35 U.S.C. [§] 282(b), including construing the claim in accordance with the ordinary and customary meaning of such claim as understood by one of ordinary skill in the art and the prosecution history pertaining to the patent.

37 C.F.R. § 42.100(b). Accordingly, our claim construction standard is the same as that of a district court. *See id.* Under the standard applied by district courts, claim terms are generally given their plain and ordinary meaning, as would have been understood by a person of ordinary skill in the art at the time of the invention and in the context of the entire patent disclosure. *Phillips v. AWH Corp.*, 415 F.3d 1303, 1313 (Fed. Cir. 2005) (en banc). "There are only two exceptions to this general rule: 1) when a patentee sets out a definition and acts as his own lexicographer, or 2) when the patentee disavows the full scope of a claim term either in the

[3] We note that Dr. Jeffay provides some testimony about the level of ordinary skill in the art (Ex. 2006 ¶¶ 38–40), but we decline to assume that Patent Owner adopts Dr. Jeffay's testimony as its position.

specification or during prosecution." *Thorner v. Sony Comput. Entm't Am. LLC*, 669 F.3d 1362, 1365 (Fed. Cir. 2012).

Although Petitioner states that "most terms require no construction," Petitioner proposes that the term "'virtual timeline' should be construed as 'a playlist of entire content files.'" Pet. 13–14 (citing Ex. 1003 ¶¶ 46–49). Patent Owner argues that "virtual timeline" does not require a specific construction because an ordinarily skilled artisan would have understood the meaning of this term from the plain language of the claims. PO Resp. 10 (citing Ex. 2006 ¶ 42).

We determine that no aspects of the challenged claims require explicit construction. *See, e.g.*, *Realtime Data, LLC v. Iancu*, 912 F.3d 1368, 1375 (Fed. Cir. 2019) ("The Board is required to construe 'only those terms . . . that are in controversy, and only to the extent necessary to resolve the controversy.'" (quoting *Vivid Techs., Inc. v. Am. Sci. & Eng'g, Inc.*, 200 F.3d 795, 803 (Fed. Cir. 1999))).

D. Obviousness Ground Based on Ogdon and Allen

Petitioner contends the subject matter of claims 1, 3–12, 14–20, 22–25, and 27–29 would have been obvious over Ogdon and Allen. Pet. 20–56; Pet. Reply 4–21. Patent Owner disputes Petitioner's contentions. PO Resp. 11–46, 52–66; PO Sur-reply 1–27.

1. Ogdon

Ogdon is a U.S. patent directed to "a presentation system wherein network transmission characteristics are utilized in determining the presentation materials presented at each client node during a performance of

the presentation." Ex. 1004, 1:12–15. Ogdon contemplates that video and audio portions of the presentation may be provided over the Internet. *Id.* at 2:8–10.

Figures 1A and 1B of Ogdon are reproduced below.

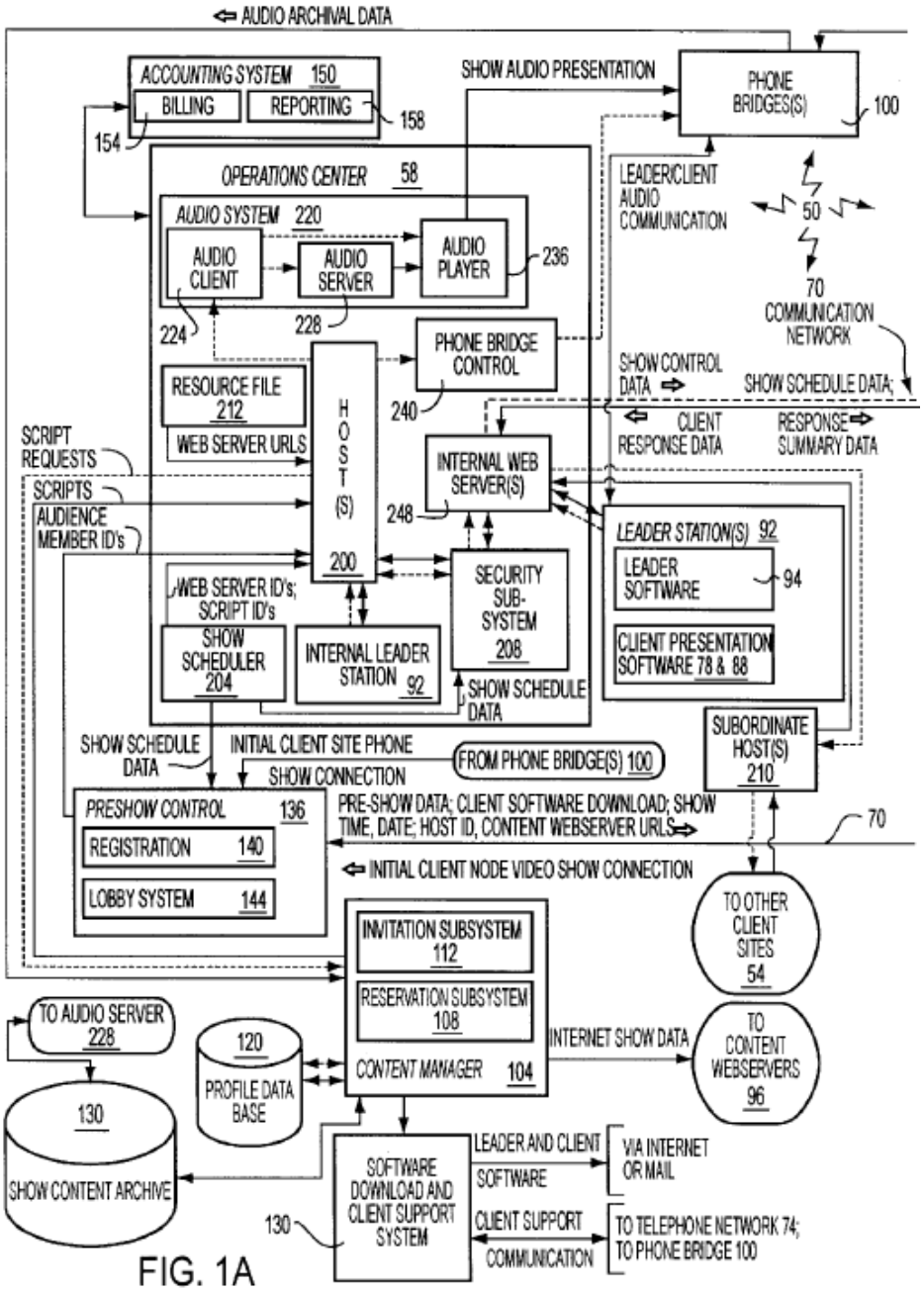

FIG. 1A

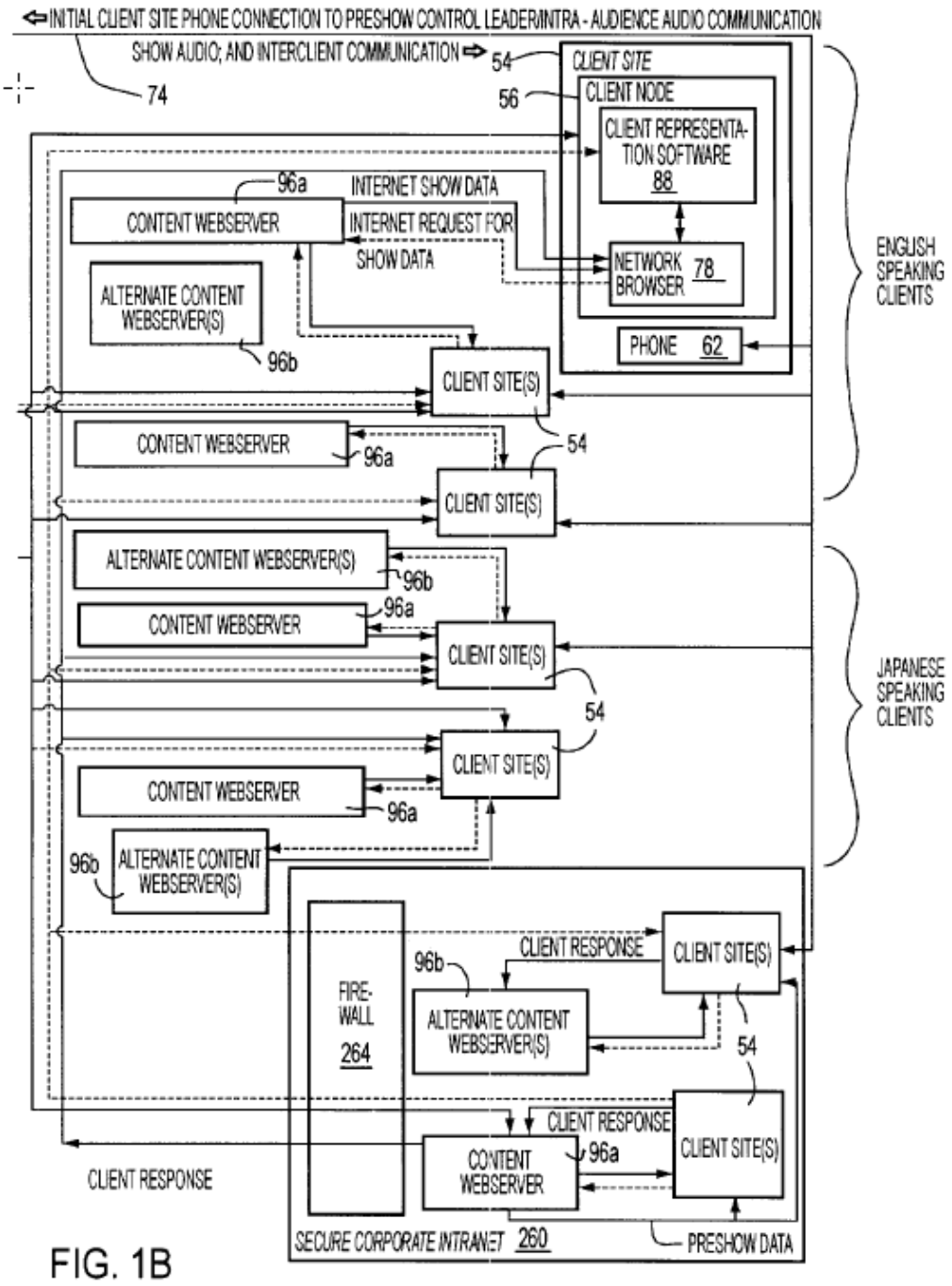

FIG. 1B

Together, Figures 1A and 1B illustrate presentation system 50 with solid arrows denoting presentation data flows and dashed arrows denoting control data flows. Ex. 1004, 7:34–37. Audience members receive a presentation at client sites 54. *Id.* at 7:40–41. Each client site 54 may have client node 56

(e.g., a personal computer) and telephone 62. *Id.* at 7:44–45. Client node 56 may receive video and audio information from communications network 70 (e.g., the Internet), and phone 62 may receive audio routed separately through voice grade telephony networks 74. *Id.* at 7:46–51.

Content manager system 104 manages presentation scripts and data, and logs and confirms the locations and addresses of content webservers 96 where the content for each presentation will reside. Ex. 1004, 9:27–31. Content manager 104 also distributes presentation content (e.g., presentation segments) to content webservers 96. *Id.* at 9:31–32, 9:44–46.

Different versions of the same presentation may be accessible from the content webservers, and each version may be tailored to a different group of audience members (e.g., Japanese-speaking audience members, or audience members affiliated with a particular organization). Ex. 1004, 2:30–35. Each presentation version may include one or more presentation segments that provide different portions of the presentation. *Id.* at 2:36–39. "[S]ubcollections each having one or more segments are provided as presentation 'elements' in that each such subcollection is intended to be an indivisible portion of a presentation performance." *Id.* at 2:39–42. Each presentation version typically includes a subcollection of segments (i.e., presentation elements) ordered according to their presentation sequence. *Id.* at 2:43–45. "[S]ubstantially every segment (or subcollections thereof) in one version corresponds with a segment (or subcollections thereof) having the same presentation order, in each of the other versions." *Id.* at 2:45–50. Such corresponding segments (or subcollections) in different versions may have approximately the same presentation duration, and one segment (or subcollection) may be presented as a replacement for another such

corresponding segment (or subcollection) during the presentation. *Id.* at 2:49–55. Corresponding alternative segments (or subcollections) also can be substituted for one another depending on the performance of the communications network. *Id.* at 2:55–61.

Petitioner notes that Ogdon issued on December 12, 2000, and contends that Ogdon qualifies as prior art under 35 U.S.C. § 102(b). Pet. 16. Patent Owner does not contest the prior art status of Ogdon. We determine that Ogdon qualifies as prior art under 35 U.S.C. § 102(b) because Ogdon's issue date of December 12, 2000, is more than one year before the earliest effective filing date of the challenged claims, which is April 30, 2004. Ex. 1001, code (60); Ex. 1004, code (45).

2. Allen

Allen is an international patent application publication directed to "techniques for the high-performance digital processing of video signals for use with a variety of streaming media encoders" that "allow content producers to produce streaming media in a flexible and scalable manner." Ex. 1005, 1:14–19. In particular, content producers may "supply the streaming media to multiple simultaneous users through a local facility, in a manner that tailors the delivery stream to the capabilities of the user's system." *Id.* at 1:18–21. In one disclosed example, a content producer produces, pre-processes, and encodes content "in RealSystem, Microsoft Windows Media, and Apple QuickTime formats, and . . . each format is encoded in three different bit rates, 56Kbps, 300Kbps, and 600Kbps." *Id.* at 12:1–5.

Petitioner notes that Allen issued on September 26, 2002, and contends that Allen qualifies as prior art under 35 U.S.C. § 102(b). Pet. 17. Patent Owner does not contest the prior art status of Allen. We determine that Allen qualifies as prior art under 35 U.S.C. § 102(b) because Allen's issue date of September 26, 2002, is more than one year before the earliest effective filing date of the challenged claims, which is April 30, 2004. Ex. 1001, code (60); Ex. 1005, code (43).

3. Claim 1

a. Preamble (1[Pre])

The preamble of claim 1 recites "[a] system for adaptive-rate content streaming of a video that is playable on one or more end user stations over the internet." Ex. 1001, 18:24–26. Petitioner cites Ogdon's teaching of a streaming a video presentation from content servers over the internet such that it is playable at various client nodes. Pet. 20–21 (citing Ex. 1003 ¶ 62; Ex. 1004, 3:38–41, 7:40–48, 7:53–63, 8:27–40, 22:10–23). For "adaptive-rate content," Petitioner cites Ogdon's teaching of "dynamically and adaptively switch[ing] between . . . versions of the presentation according to network transmission characteristics at each client network node." *Id.* at 21 (emphasis omitted; first alteration added) (quoting Ex. 1004, 3:38–41).

Patent Owner argues that an ordinarily skilled artisan "would have understood that 'adaptive-rate content streaming' requires the ability to adaptively select among different bitrate versions of content for streaming." PO Resp. 43 (citing Ex. 2006 ¶ 133). Pointing to our Decisions on Institution in IPR2024-00146 and other cases, Patent Owner argues that "the Board confirmed that Ogdon does not disclose providing multiple different

bitrate versions of the same video," so "Ogdon also cannot disclose the ability to adaptively select among different bitrate versions of the same video for streaming." *Id.* at 43 (citing, *inter alia*, Ex. 2006 ¶ 133; IPR2024-00146, Paper 9, 40); *see also id.* at 5, 16, 24–25 & n.4, 32, 34 (similar arguments); PO Sur-reply 4–6 (similar argument). According to Patent Owner, "Ogdon is directed to an ***adaptive content*** system where different ***types*** of content are provided to users," which is "fundamentally different from adaptively adjusting the bitrate of the same video content during streaming, as required by the challenged claim." PO Resp. 43–44 (citing, *inter alia*, Ex. 1004, 2:66–3:8, Ex. 2006 ¶ 134).

Patent Owner also argues that Ogdon teaches away from video streaming. PO Resp. 24–29; PO Sur-reply 13–14. That is, "[r]ather than encode the same video at ***different bitrates*** to account for changes in network conditions, Ogdon describes creating entirely ***different content*** 'for a different group of audience members' such as different corporate roles or different network connectivity." PO Resp. 24 (citing Ex. 1004, 2:30–35, 2:43–66, 22:42–47; Ex. 2006 ¶¶ 60, 74, 76). According to Patent Owner, "Ogdon's different 'versions' of a presentation are not 'streams.'" *Id.* at 25. Although Patent Owner acknowledges that "Ogdon uses the term 'stream' in its specification," Patent Owner argues that Ogdon is always referring to an audio stream, not a video stream. *Id.*

In its Reply, Petitioner argues that "Ogdon clearly teaches an adaptive-***rate*** system." Pet. Reply 11 (citing Ex. 1004, 3:38–44; Ex. 1028 ¶¶ 46–47). Specifically, Petitioner cites Ogdon's teachings "that its different video presentation versions are copies of the 'same' presentation and each includes segments that 'correspond' in content and are 'interchangeable' and

'replaceable' with one another." *Id.* at 5 (citing Ex. 1004, 2:30, 2:36–39, 2:49–55, 3:39–40, 3:43–44, 21:33–34, 22:63–64, 30:21–22, 32:36–38). Petitioner also cites Ogdon's claim 9, which "expressly recites 'a first ***video*** portion' and an alternate 'second ***video*** portion that ***corresponds in content*** with said first video portion'; and the first and second video portions 'have substantially different expected data transmission rates.'" *Id.* at 6 (quoting Ex. 1004, claim 9). Petitioner likewise cites Ogdon's claims 6 and 20, which both recite alternative video portions with "motion" and "reduced motion." *Id.* at 6 n.6 (citing Ex. 1004, claims 6, 20; Ex. 1028 ¶ 36).

Petitioner also disputes Patent Owner's teaching-away argument because Patent Owner "ignores Ogdon's express teaching that video and audio may be transmitted 'solely by a TCP/IP network' when 'there is sufficient communication bandwidth to synchronize presentation transmissions." *Id.* at 10 (citing Ex. 1004, 2:8–12). Furthermore, Petitioner highlights Ogdon's teaching that video can be transmitted to clients "in the same manner as audio," and Petitioner notes that "there is no dispute that Ogdon teaches streaming audio." *Id.* (citing Ex. 1004, 2:8–12, 5:16–18, 5:28–36, 7:44–48).

In its Sur-reply, Patent Owner disputes that the recitation "corresponds in content" in Ogdon's claim 9 means identical video content. PO Sur-reply 7–8. Based on testimony from Dr. Jeffay, Patent Owner argues that, in Ogdon, this refers to alternative content, such as content in different languages. *Id.* (citing Ex. 1004, 13:55–57; Ex. 2006 ¶ 60 n.7).

Based on the complete record presented, we are persuaded by Petitioner's contention that Ogdon teaches "adaptive-rate content streaming of a video" as recited in the preamble of claim 1.

As an initial matter, we agree with Petitioner that Ogdon discloses adaptive-rate shifting of presentation content that is transmitted over the Internet based on network conditions. Pet. 20–21; *see also*, *e.g.*, Ex. 1004, (57). Although Patent Owner argues that "Ogdon is directed to an ***adaptive content*** system where different ***types*** of content are provided to users" (PO Resp. 43–44), Ogdon teaches the provision of "[d]ifferent versions of the same presentation," with "any of the corresponding alternative segments (or subcollections thereof) from different versions can be presented as a replacement for another such corresponding segment (or subcollection) during the presentation. *See* Ex. 1004, 2:30–35, 2:49–55. In particular, Ogdon discloses that "it is an aspect of the present invention to dynamically and adaptively switch between content webservers and/or versions of the presentation according to network transmission characteristics at each client network node" so that "the clients at the client nodes have presented to them simultaneously, synchronously and in real time, corresponding (in content) segments of the presentation." *Id.* at 3:38–44. That is, Ogdon's segments having corresponding content are presented simultaneously at the various client nodes. *Id.*

In addition, claim 9 of Ogdon explicitly describes corresponding video portions tailored to different bitrates: "said second subcollection includes a different second video portion that corresponds in content with said first video portion," wherein "said first and second video portions have substantially different expected data transmission rates for being transmitted to said first client node." Ex. 1004, 30:1–10. Although Patent Owner and Dr. Jeffay interpret "corresponds in content" narrowly such that it cannot mean different versions of the same video (PO Sur-reply 7–8; Ex. 2006 ¶ 60

n.7), we are more persuaded by Petitioner's and Dr. Houh's view that "corresponds in content" teaches or at least suggests different versions of the same video. Pet. Reply 6–7; Ex. 1028 ¶¶ 31–36. This is supported by claims 6 and 20 of Ogdon, which each recite different versions of a video with motion and with "reduced motion." Ex. 1004, 29:45–47, 32:23–27. As explained by Dr. Houh, an ordinarily skilled artisan would have understood the "reduced motion" video to refer to low frame rate video. Ex. 1028 ¶ 36. Dr. Jeffay's cross-examination testimony is consistent. *See* Ex. 1030, 136:19–137:24, 293:16–294:1. We also note that Ogdon teaches presentation segments being a replacement for other corresponding segments during a presentation. Ex. 1004, 2:49–55, 32:36–38. Ogdon also discusses different "versions" of the video presentation. *See, e.g., id.* at 4:14–17, 4:29–36. Considering these teachings in conjunction with Ogdon's discussion of videos with motion and with reduced motion for different transmission rates, we find that Ogdon at least suggests different versions of the same video.

We also have considered Patent Owner's arguments about the applicability here of various preliminary findings that we made in our Decisions on Institution in IPR2024-00146 and other cases. *See* PO Resp. 5, 16, 24–25 & n.4, 32, 34, 43; PO Sur-reply 4–6. We note that a decision to institute trial is not a final decision as to patentability of any claim, and we are not bound by findings made in our institution decisions. *See TriVascular, Inc. v. Samuels*, 812 F.3d 1056, 1068 (Fed. Cir. 2016) (noting that "there is a significant difference between a petitioner's burden to establish a 'reasonable likelihood of success' at institution, and actually proving invalidity by a preponderance of the evidence at trial"). To the

extent that our present findings about Ogdon are perceived to conflict with prior decisions on institution, we note that our findings here are made on the fully developed trial record particular to this case. We also note that certain of the other cases that Patent Owner references presented different circumstances, such as different claim language and unpatentability grounds based on anticipation rather than obviousness.

Turning now to Patent Owner's arguments that Ogdon teaches away from video streaming (PO Resp. 24–29; PO Sur-reply 13–14), we are persuaded instead by Petitioner's contention that Ogdon teaches video streaming. Pet. 20–22; Pet. Reply 9–11. Specifically, Ogdon teaches that "both the video and audio portions of the presentation may be provided solely by a TCP/IP network such as the Internet, assuming that there is sufficient communication bandwidth to synchronize presentation transmissions to the presentation members." Ex. 1004, 2:8–12. As noted by Dr. Houh, "[t]hat is streaming." Ex. 1028 ¶ 42. We agree. In addition, Patent Owner does not dispute that Ogdon at least teaches audio streaming (PO Resp. 17) and that Ogdon's system is an "adaptive content streaming system" (*id.* at 5–6). Any distinction between audio and video streaming falls away in light of Ogdon's teachings that video can be transmitted to clients in the same manner as audio. *See* Ex. 1004, 2:8–12 (reproduced above), 5:16–18 ("both the video and audio portions of a presentation may be provided by the Internet"), 5:28–36 ("audience members may simultaneously receive a coordinated sequence of multimedia data . . . in real time at an audience member's browser"), 7:44–48 ("the client node 56 may receive video (and possibly audio as well) information from a communications network 70 such as the Internet").

For these reasons, and based on the full trial record, we find that Ogdon teaches or at least suggests the preamble.[4]

b. Limitation 1[A]

Claim 1 further recites "at least one storage device storing the video." Ex. 1001, 18:27. Petitioner cites Ogdon's webservers 96, which store presentation segments, for teaching the recited "storage device." Pet. 21 (citing Ex. 1003 ¶ 63; Ex. 1004, 9:30–31, 9:44–46, 10:7–13, Fig. 2C, claim 21). Patent Owner does not dispute Petitioner's analysis. We find that Ogdon teaches this limitation. *See, e.g.*, Ex. 1004, 9:30–31, 9:44–46, 10:7–13, Fig. 2C, claim 21.

c. Limitation 1[B] and Rationale for the Combination

Claim 1 further recites that "the video is digitally encoded at a plurality of different bitrates creating a plurality of streams including a low quality stream, a medium quality stream, and a high quality stream." Ex. 1001, 18:27–31. Petitioner cites Ogdon's teaching of "'[d]ifferent versions of the same presentation' with 'different network [transmission] requirements' such as 'a first version' requiring 'a network transmission rate sufficient for real time or animated video' and 'another version' requiring 'a transmission rate sufficient for graphic slides.'" Pet. 22 (second alteration added to reflect actual quotation) (quoting Ex. 1004, 2:30–66) (citing Ex. 1003 ¶ 64; Ex. 1004, 2:8–10, 13:47–49, 22:44–47, 24:55). Thus,

[4] Because Petitioner shows persuasively that Ogdon teaches or suggests the subject matter of the preamble, we need not determine whether the preamble is limiting. *See Realtime Data*, 912 F.3d at 1375.

according to Petitioner, "Ogdon discloses that the video (video presentation) is digitally encoded at a plurality of different bitrates (different versions or quality levels) creating a plurality of streams." *Id.*

Petitioner additionally cites Allen's teaching of "encod[ing] video content into at least three different quality levels (or bitrates) for streaming in order to allow streaming to various clients with different network requirements including, for example, at 56 kbps, at 300 kbps, and at 600 kbps." Pet. 22–23 (citing Ex. 1005, 12:1–5). In particular, Petitioner maps the recited low, medium, and high quality streams to Allen's 56 kbps, 300 kbps, and 600 kbps bitrate streams, respectively. *Id.* at 23 (citing Ex. 1003 ¶¶ 65–66). Petitioner contends that an ordinarily skilled artisan

> would have been motivated to encode the video presentation of Ogdon, including each sequential segment of the video, into each of a low quality, medium quality, and high quality level bitrate stream, as taught by Allen, because providing three different quality levels (low at 56 kbps, medium at 300 kbps, and high at 600 kbps) would enable user client nodes with a wide variety of network bandwidth requirements to stream the video presentation—a stated goal of Ogdon.

Pet. 23 (citing Ex. 1003 ¶ 67; Ex. 1004, code (57)). Petitioner also contends an ordinarily skilled artisan reasonably would have expected success in making the proposed combination because "both Ogdon and Allen are drawn to similar systems of client-server based streaming and because simply encoding another copy at an additional quality level would have been a simple and straightforward modification." *Id.* at 23–24 (citing Ex. 1003 ¶ 67).

Patent Owner argues that Allen teaches away from dividing a video stream into streams of different bitrates. PO Resp. 29–32; PO Sur-reply 17–

18. According to Patent Owner, Allen's background section disparages the use of multiple bitrates for many different reasons. PO Resp. 30 (citing Ex. 1005, 4:8–25, 5:1–3, 6:3–20, 9:12–10:8, 116:13); PO Sur-reply 17–18 (similar argument). In contrast, "Allen's actual solution is to ***avoid*** multi-bitrate encoding" such that encoding is done "at only a ***single bitrate***" and at "the 'last mile,' or 'edge' of the network." PO Resp. 31 (citing Ex. 1005, 104:9–11, 116:15–21). Patent Owner also argues that Petitioner's combination changes Ogdon's principle of operation "by ***reverting*** Ogdon's non-streaming solution ***back into*** a video streaming solution—the exact thing Ogdon sought to avoid." *Id.* at 32 (citing Ex. 2006 ¶ 109).

Petitioner replies that it is only relying on teachings from Allen's background section. Pet. Reply 17. Beyond Allen's background teachings, Petitioner argues that "Allen's system still encodes a video into multiple streams and bitrates but moves the encoding process to the 'edge' servers closest to users, instead of at servers near the video source." *Id.* at 18 (citing Ex. 1005, 24:19–25:23).

We are persuaded that the proposed combination of Ogdon and Allen teaches encoding video into a low quality stream, a medium quality stream, and a high quality stream. First, for reasons similar to those discussed above, we find that Ogdon teaches video streaming, and we disagree that Ogdon is limited to substituting wholly different types of content. *See supra* § II.D.3.a. As such, Petitioner's proposed combination is supported by Ogdon's teachings of adaptively switching between presentation versions, including versions of a streamed video, based on transmission characteristics. *See, e.g.*, Ex. 1004, 2:8–12, 3:38–44, 30:1–10. Second, Allen teaches formatting a video at three different bitrates. *See* Ex. 1005,

12:1–5. The fact that this teaching appears in a background section does not detract from Allen's usefulness in the proposed combination because we must consider Allen "for everything it *teaches* by way of technology," which is "not limited to the particular *invention* it is describing and attempting to protect." *EWP Corp. v. Reliance Universal Inc.*, 755 F.2d 898, 907 (Fed. Cir. 1985). And, even if we were to look to Allen's particular invention, Petitioner establishes that Allen teaches the encoding at edge servers of video into various "formats and bit rates matched to . . . each viewer." Ex. 1005, 24:19–25:23. Thus, Allen also supports Petitioner's proposed combination. We find that neither Ogdon nor Allen teaches away from the proposed combination.

Regarding Petitioner's rationale for the combination, we are persuaded by Dr. Houh's testimony that an ordinarily skilled artisan would have had reason to combine Allen with Ogdon to enable streaming video presentations for a variety of different available bandwidths. Ex. 1003 ¶¶ 66–67; *see also id.* ¶ 70 (Dr. Houh testifying that, in light of Allen, an ordinarily skilled artisan "would have been motivated to encode each recorded video segment of Ogdon into each quality level in parallel in real-time"). In particular, Ogdon's teaching of retrieving alternatively sized presentations based on transmission data rates corresponds with Allen's teaching of encoding video at different bitrates. *See* Ex. 1004, code (57) (stating that a greater-sized presentation for a "higher transmission rate" has "corresponding enhanced quality of presentation" compared to a reduced-sized version for a "low transmission data rate"), 22:42–47 (stating that "as the expected amount of time for retrieving one or more presentation elements lengthens, . . . better presentation quality presentation elements

may be retrieved (e.g., the presentation quality may be enhanced from limited or no animation to full animation)"). We agree with Petitioner that an ordinarily skilled artisan reasonably would have expected success in making the proposed combination, particularly given that Ogdon already contemplates alternative presentations and versions for different transmission rates. *See*, *e.g.*, Ex. 1003 ¶¶ 65, 67; Ex. 1004, code (57).

For these reasons, Petitioner has persuasively shown that the proposed combination of Ogdon and Allen teaches that "the video is digitally encoded at a plurality of different bitrates creating a plurality of streams including a low quality stream, a medium quality stream, and a high quality stream." In addition, we are persuaded that Petitioner's proffered reasoning for combining Ogdon and Allen supports the legal conclusion of obviousness.

d. Limitation 1[C]

Claim 1 further recites

> the low quality stream, the medium quality stream, and the high quality stream each comprising a group of streamlets, wherein each streamlet corresponds to a portion of the video, and wherein each streamlet in each group of streamlets is encoded at a respective one of the plurality of different bitrates, and wherein each group of streamlets comprises at least first and second streamlets.

Ex. 1001, 18:31–38. Petitioner maps the recited "streamlets" to Ogdon's segments, and Petitioner contends that the recited "group of streamlets" comprises elements, collections, or subcollections of such segments. Pet. 24 (citing Ex. 1003 ¶ 68; Ex. 1004, 2:43–55). For the recited groups comprising "at least first and second streamlets," Petitioner cites Ogdon's teaching that each subcollection of segments is ordered according to a

presentation sequence. *Id.* at 25 (citing Ex. 1003 ¶ 69; Ex. 1004, 2:44–45, 3:46–47, Fig. 2C (step 508)). Petitioner references the same teachings from Allen discussed above regarding the low, medium, and high quality levels. *Id.*; *see supra* § II.D.3.c. Petitioner contends that an ordinarily skilled artisan "would have been motivated to encode each recorded video segment of Ogdon into each quality level in parallel in real-time prior to storing at the webservers," which Petitioner calls "a convenient and practical way to generate different quality levels for each segment in real-time for distribution to client nodes." *Id.* at 25–26 (citing Ex. 1003 ¶ 70; Ex. 1005, 3:16–18, 5:15–21). Petitioner also contends an ordinarily skilled artisan would have expected success in making this modification "because Ogdon teaches corresponding segments at different quality levels" and an ordinarily skilled artisan "would have known how to encode each raw video segment into a corresponding quality level (bitrate) on a segment-by-segment basis in parallel." *Id.* at 26 (citing Ex. 1003 ¶ 71); *see also* Pet. Reply 16 (arguing that "Ogdon is already a client-pull adaptive-rate video streaming system" and that "the modification taught by Allen simply encodes three segmented versions of the same video presentation stream").

Patent Owner argues that the '138 patent "recites that video 'streams' of different bitrates are divided into time-aligned 'streamlets' of the same video to permit adaption to changing network conditions," whereas "Ogdon describes a fundamentally different approach to this problem that does not involve streamlets." PO Resp. 13 (citing Ex. 2006 ¶¶ 53–65). According to Patent Owner, Ogdon "purports to overcome the 'drawbacks' of videoconferencing by separating the audio and visual portions of a slideshow presentation from each other" and then "synchronously provid[ing

the] audio and video portions of the presentation through different communication channels." *Id.* (citing Ex. 1004, 2:66–3:8, 3:64–4:10).

Although Patent Owner acknowledges that Ogdon divides each audio or video portion "into different 'presentation elements,' or 'segments,' that 'play[] over a set period of time,'" Patent Owner argues that "this results in different users potentially viewing different 'versions' of the presentation with different visual content as network conditions change." PO Resp. 14–15 (citing Ex. 2006 ¶ 119); *see also* PO Sur-reply 3–4 (similar argument). Patent Owner also argues that Ogdon "substitutes entirely different content in and out of a presentation when network conditions change, rather than switching between segments of the same video having different qualities but identical content, as required by the challenged claims." PO Resp. 16; *see also* PO Sur-reply 14 (similar argument). According to Patent Owner, "each of Ogdon's 'segments' is a distinct, stand-alone piece of content, like a PowerPoint slide." PO Resp. 16. Patent Owner also argues that "[t]he types of content that Ogdon distributes (*e.g.*, images, audio, and video clips) also are entirely inconsistent with the claimed streaming video content," and that "Ogdon refers only to 'video' as a type of 'multimedia element' that could be included as part of a presentation." *Id.* at 17 (citing Ex. 1004, 2:66–3:8; Ex. 2006 ¶ 58). Thus, according to Patent Owner, "Ogdon's 'segments' are not 'streamlets,' or portions of a stream, because the 'unique (multi)media elements' that make up those 'segments' are not 'video ***streams***,'" and thus are not video "subdivided into time-aligned portions of different bitrates, as recited in the challenged claims." *Id.* at 18–19; *see also* PO Sur-reply 10–13 (similar argument).

Patent Owner also argues that Petitioner does not rely on Allen to disclose "segmentation" of Ogdon's presentation materials, but rather "relies on Allen only to suggest encoding ***each of Ogdon's 'segments'*** at different bitrates." PO Resp. 19 (citing Pet. 25–26). According to Patent Owner, Petitioner fails to show "***further dividing*** the 'raw video segments' of allegedly different quality into smaller portions of ***the same video***." *Id.* at 22 (citing Ex. 2006 ¶ 99). Patent Owner also argues that Allen teaches away from dividing a video stream into streams of different bitrates. *Id.* at 29. According to Patent Owner, Allen's solution "involves encoding the video at only a ***single bitrate***," and "rather than allowing a client to choose the optimal bitrate for its current network conditions, Allen would have the edge network operator determine a bitrate for its network customers." *Id.* at 31 (citing Ex. 1005, 100:4–10, 104:9–16, 116:6–21; Ex. 2006 ¶ 106). Thus, Patent Owner argues that "Petitioner fails to articulate a modification to the Ogdon–Allen combination that would meet the 'streamlet' limitation in each of the challenged claims." *Id.* at 22.

In its Reply, Petitioner points out that the claims "do not recite 'dividing'" and "only require the segments to make up a video stream." Pet. Reply 12 (citing Ex. 1001, claim 1). Petitioner cites the testimony of Mr. Major, a named inventor of the '138 patent, that "'streamlets' are 'segments,'" and that "segments, even from different videos, could be arranged to 'make up a larger video presentation.'" *Id.* at 12–13 (citing Ex. 1021, 50:11–17, 53:7–11, 51:6–14. 51:15–52:5). Petitioner also cites Dr. Jeffay's admission that Ogdon "describes ***dividing*** a presentation into different 'segments,'" and argues that the '138 patent's architecture similarly uses "a web server hosting sets of content files where each set represented

segments ('streamlets') of a larger media presentation." *Id.* at 13 (quoting Ex. 2006 ¶¶ 35, 46). Petitioner also disputes Patent Owner's argument that Ogdon's segments are each "unique" standalone pieces of content with no relation between segments. *Id.* (citing PO Resp. 16). Petitioner notes that the challenged claims do not require a relationship between segments. *Id.* And, even if they did, Petitioner cites Ogdon's teachings that "segments are 'ordered' and collectively make up a larger video presentation." *Id.* (citing Ex. 1004, 3:11–14, 3:46–50, 18:42–43; Ex. 1028 ¶¶ 50–52).

We are persuaded that, in the proposed combination, Ogdon's presentation segments teach the recited "streamlets," and that a collection or subcollection of presentation segments teaches the recited "group of streamlets." *See, e.g.*, Ex. 1004, 2:43–55, 3:46–47, Fig. 2C, claim 21. Ogdon's presentation segments comprise video. *See, e.g.*, Ex. 1004, Fig. 2C (step 508 describing a "next collection of one or more (video) segments"). Further, Ogdon teaches that "each version of a presentation typically has its subcollections of segments (i.e., presentation elements) ordered according to their presentation sequence" (Ex. 1004, 2:43–45), which supports that each of Ogdon's video segments corresponds to a portion of the video. *See* Ex. 1003 ¶ 69. In addition, the inventor, Mr. Major, acknowledged during his testimony that "streamlets" and "segments" can be used interchangeably, with "streamlets" being a word that another inventor "came up with." *See* Ex. 1021, 50:11–21 (testifying that he "will call them sometimes video chunks or video streamlets or video segments" and that "streamlets" is a word that "Mark Hurst came up with."), 53:7–11 ("Q. So – your invention, . . . you're creating video streamlets or segments, which are the same thing,

right? A. Yeah."). This also supports Petitioner's mapping of the claimed "streamlets" to Ogdon's segments.

Furthermore, as discussed above (*see supra* § II.D.3.c), Allen teaches encoding a video at three different bitrates: 56 kbps, 300 kpbs, and 600 kbps. *See* Ex. 1005, 12:1–5. Given that Ogdon teaches alternative presentations and versions for different transmission rates (*see*, *e.g.*, Ex. 1004, code (57)), we are persuaded by Dr. Houh's testimony that an ordinarily skilled artisan would have been motivated to encode Ogdon's real-time video segments (i.e., "streamlets") based on Allen's teachings at each of these three bitrates in parallel for sending to client nodes. *See* Ex. 1003 ¶¶ 70–71; Ex. 1004, 2:8–10, 2:30–66. This testimony is supported by Allen's teaching of a plurality of encoders simultaneously processing video to provide output "in a particular popular format and bit rate." *See* Ex. 1005, 3:16–18.

Based on the complete trial record, we find that the proposed combination of Ogdon and Allen teaches limitation 1[C]. We also are persuaded that Petitioner's proffered reasoning for combining Ogdon and Allen supports the legal conclusion of obviousness.

e. Limitation 1[D]

Claim 1 further recites "wherein at least one of the low quality stream, the medium quality stream, and the high quality stream is encoded at a bitrate of no less than 600 kbps." Ex. 1001, 18:39–41. Petitioner cites the same analysis discussed above based on Ogdon and Allen for teaching a high quality stream with a bitrate of 600 kbps. Pet. 26 (citing Ex. 1003 ¶ 72). Patent Owner does not dispute Petitioner's analysis for this limitation apart from its arguments discussed above. We are persuaded that the

proposed combination of Ogdon and Allen teaches a high quality stream encoded at 600 kbps. *See, e.g.*, Ex. 1003 ¶ 72; Ex. 1005, 12:1–5; *see also supra* § II.D.3.c.

f. Limitation 1[E]

Claim 1 further recites

> wherein the first streamlet of each of the groups of streamlets has the same first duration and encodes the same first portion of the video in each of the low quality stream, the medium quality stream, and the high quality stream, and wherein the first streamlet of the low quality stream encodes the same first portion of the video at a lower bitrate than the first streamlet of the high quality stream and the first streamlet of the medium quality stream.

Ex. 1001, 18:42–50. Petitioner cites Ogdon's teaching that "corresponding segments (or subcollections thereof) in different versions have approximately the same presentation duration" and that "any of the corresponding **alternative segments (or subcollections thereof) from different versions** can be presented as a **replacement** for another such corresponding segment (or subcollection) during the presentation." Pet. 27 (emphasis by Petitioner) (quoting Ex. 1004, 2:49–55). Petitioner contends that an ordinarily skilled artisan would have understood "'approximately the same presentation duration' . . . not to be limited to only durations that are close but not exactly the same, but rather encompassing durations that are either the same, or approximately the same." *Id.* at 27–28 (citing Ex. 1003 ¶¶ 73–74). And, as discussed above, Petitioner contends that an ordinarily skilled artisan "would have been motivated to encode each segment of Ogdon into each corresponding quality level bitrate in real-time—which

would generate corresponding segments of equal duration." *Id.* at 28–29 (citing Ex. 1003 ¶ 76).

Patent Owner repeats its argument that Ogdon's different "versions" of "segments" are "different types of content altogether." PO Resp. 34. According to Patent Owner, Ogdon's "different types of content" are, for example, "a video versus a single image—that, by their very nature, have different lengths (or no length whatsoever)." *Id.* (citing Ex. 2006 ¶ 113). Patent Owner also argues that Ogdon's "'segments' are only '***approximately*** the same presentation duration,' and even then, this is only an 'assum[ption]' Ogdon makes in discussing a possible use of its approach." *Id.* at 36 (citing Ex. 1004, 2:49–55). Thus, Patent Owner argues that Ogdon's segments having approximately the same duration do not teach the "'streamlets' of the 'same [] duration' or 'equal play back duration' recited in the challenged claims." *Id.* (citing Ex. 2006 ¶ 120).

In its Reply, Petitioner disputes Patent Owner's argument that Ogdon's presentation elements (e.g., slides) do not have a duration because it allegedly "ignores Ogdon's teaching that an 'element' can be any 'combination of one or more of . . . audio, images, animation or video, wherein such a multimedia element plays over a set period of time.'" Pet. Reply 13–14 (citing Ex. 1004, 2:66–3:6). Regarding Patent Owner's argument that Ogdon's disclosure of "approximately the same" duration does not teach the same duration (PO Resp. 36–37), Petitioner contends that "[m]odifiers like 'approximately,' 'about,' and 'substantially' are frequently used in patents to include 'exactly' and nearly.'" Pet. Reply 14 (citing *Halliburton Servs. v. Smith Int'l, Inc.*, 2004 WL 305722, at *6 (E.D. Tex. 2004) ("approximately the same" means "nearly or exactly the same");

Janssen Pharms., Inc. v. Tolmar, Inc., 2024 WL 834762, at *10 (D. Del. 2024) ("'approximately once a month' as used in the specification . . . mean[s] that once a month is the ideal timing")).

Based on the full trial record, we find that Ogdon in view of Allen teaches limitation 1[E]. In particular, we are persuaded that an ordinarily skilled artisan considering Ogdon's teachings of corresponding segments (1) as having approximately the same duration and (2) as being replacements for one another (*see, e.g.*, Ex. 1004, 2:49–55) would have known to make video segments in different streams the same duration. *See, e.g.*, Ex. 1003 ¶¶ 73–74. We disagree with Patent Owner's (PO Resp. 36–37) and Dr. Jeffay's (Ex. 2006 ¶¶ 120–121) wooden interpretation that Ogdon's teaching of "segments . . . in different versions hav[ing] approximately the same presentation duration" somehow would not encompass segments with the same duration. Their interpretation is premised on other teachings in Ogdon of regarding skipping the visual portion of a segment and of pacing of presentation materials. *See* PO Resp. 36–37 (citing Ex. 1004, 6:40–47, 24:28–39). But these teachings—which focus on other aspects of Ogdon's system—do not undermine Ogdon's other teachings on different video portions for different expected transmission rates, as we have discussed above. *See supra* § II.D.3.a. In addition, Ogdon's segments can include "animation or video, wherein such a multimedia element plays over a set period of time," and Ogdon's system can switch among versions of the presentation that "correspond[] (in content) . . . in real time" to achieve "an ordered series of presentation segments." Ex. 1004, 2:66–3:6, 3:38–51. Considering these teachings in conjunction with Ogdon's disclosure of segments having "approximately the same presentation duration," we find

that Ogdon teaches segments of video (i.e., the recited "streamlets") in different steams having the same duration, as is recited in limitation 1[E].

For similar reasons to those discussed above, we find that the proposed combination of Ogdon and Allen teaches the recited encoding of the same portion of video. As discussed above, Ogdon teaches transmission of different versions of the same video that correspond in content. *See, e.g.*, Ex. 1004, 2:49–55, 3:38–44, 29:45–47, 30:1–10, 32:23–27. Petitioner proposes combining this teaching with Allen's teaching of encoding video at three different bitrates. *See, e.g.*, Ex. 1005, 3:16–18, 12:1–5. In light of these teachings, we are persuaded that the proposed combination teaches that streamlets in the various streams encode the same portion of video, as is recited in limitation 1[E]. *See, e.g.*, Ex. 1003 ¶¶ 70–71, 76.

Based on the complete trial record, we find that the proposed combination of Ogdon and Allen teaches limitation 1[E].

g. Secondary Considerations of Nonobviousness

"[E]vidence rising out of the so-called 'secondary considerations' must always when present be considered en route to a determination of obviousness." *Transocean Offshore Deepwater Drilling, Inc. v. Maersk Drilling USA, Inc.*, 699 F.3d 1340, 1349 (Fed. Cir. 2012) (quoting *Stratoflex, Inc. v. Aeroquip Corp.*, 713 F.2d 1530, 1538 (Fed. Cir. 1983)). "For objective evidence of secondary considerations to be accorded substantial weight, its proponent must establish a nexus between the evidence and the merits of the *claimed invention.*" *In re Huai-Hung Kao*, 639 F.3d 1057, 1068 (Fed. Cir. 2011) (quoting *Wyers v. Master Lock Co.*, 616 F.3d 1231, 1246 (Fed. Cir. 2010)).

Patent Owner cites certain evidence of secondary considerations related to the MOVE Media Player, a product of MOVE Networks, Inc. ("MOVE Networks").[5] PO Resp. 52–65; PO Sur-reply 20–27. In particular, Patent Owner contends that the MOVE Media player embodied the adaptive-bitrate ("ABR") technology of the challenged claims. PO Resp. 52. Patent Owner also notes that the Administrative Law Judge (ALJ) in the ITC Investigation found that some of the same evidence of secondary considerations supported a finding of nonobviousness.[6] *Id.* at 65–66 (citing Ex. 1009, 213–17; Ex. 2005, 2 (Commission adopting ALJ findings)); PO Sur-reply 20.

Petitioner disputes that there is a nexus between the challenged claims and the asserted secondary considerations. Pet. Reply 22–25. Further, even if there were a nexus, Petitioner argues that Patent Owner's evidence of secondary considerations does not overcome Petitioner's evidence of obviousness. *Id.* at 25–27.

---

[5] According to Patent Owner, one of Patent Owner's subsidiaries acquired MOVE Networks, including the challenged patent, in 2010. PO Resp. 53 (citing Ex. 2080).

[6] We have considered the discussion of secondary considerations of nonobviousness in the ALJ's Initial Determination. We note that the ALJ's finding of a presumption of nexus was premised on the Respondents' concession about an invalidating public use of the MOVE Media Player. Ex. 1009, 212–13. In contrast, the instant record includes no such concession. Otherwise, we have no way of knowing what other similarities and differences exist between the records of the ITC Investigation and the instant case. Accordingly, we find the discussion in the Initial Determination to be of little moment, and we form our own opinion about the evidence presented in this case, as discussed below.

(1) Nexus

A patent owner is entitled to a presumption of nexus when it shows that the asserted objective evidence is tied to a specific product that "embodies the claimed features, and is coextensive with them." *Brown & Williamson Tobacco Corp. v. Philip Morris, Inc.*, 229 F.3d 1120, 1130 (Fed. Cir. 2000). A patent owner is further "afforded an opportunity to prove nexus by showing that the evidence of secondary considerations is the direct result of the unique characteristics of the claimed invention." *Fox Factory, Inc. v. SRAM, LLC*, 944 F.3d 1366, 1373–74 (Fed. Cir. 2019) (internal quotation omitted).

Patent Owner contends that "MOVE's contemporaneous documents show that the MOVE Media Player practiced the challenged claims." PO Resp. 53 (citing, *inter alia*, Exs. 2011, 2012). In support of this contention, Patent Owner cites Dr. Jeffay's testimony, which allegedly shows that the MOVE Media Player "practices each limitation of the challenged claims on an element-by-element basis and that the player is co-extensive with the claimed invention." *Id.* (citing Ex. 2006 ¶¶ 164–188). As part of that testimony, Dr. Jeffay provides a claim chart analyzing the MOVE Media Player that is keyed to claim 14 of the '138 patent.[7] *See* Ex. 2062 (claim chart); *see also* Ex. 2006 ¶ 165 (citing same). Based on this analysis, Patent

[7] For purposes of this Decision, we consider Patent Owner's evidence of secondary considerations relative to all of the challenged claims even though Patent Owner has only put forth a "representative claim chart" comparing the MOVE Media Player with claim 14 of the '138 patent. Ex. 2006 ¶ 165; Ex. 2062.

Owner argues that it is entitled to a presumption of nexus.[8] PO Resp. 54; PO Sur-reply 21. Patent Owner also contends that certain secondary considerations related to the MOVE Media Player are directly linked to claimed features. PO Resp. 53–54, 60; PO Sur-reply 26.

Petitioner disputes that Patent Owner is entitled to a presumption of nexus. Pet. Reply 22–24. In particular, Petitioner cites one of the same nexus documents from Patent Owner as stating that the "secret" of the MOVE Media Player is the use of multiple TCP connections for requesting streamlets in parallel. *Id.* at 22 (quoting Ex. 2011, 4) (citing Ex. 2059, 11). Petitioner characterizes this as a critical unclaimed feature that undermines Patent Owner's evidence of nexus. *Id.* at 22–23. Petitioner also cites the use of HTTP and standard web servers as being critical unclaimed features. *Id.* at 23 (citing Ex. 2012, 22; Ex. 2062, 3). Petitioner additionally attacks Patent Owner's "brief conclusory arguments" on direct nexus as being based on features that were already in the prior art. *Id.* at 24 (citing PO Resp. 53–54; *Kao*, 639 F.3d at 1069).

---

[8] Patent Owner also makes tangential references to "Sling TV" in its arguments in favor of a presumption of nexus. *See* PO Resp. 54; PO Sur-reply 21. But Patent Owner never develops any basis for alleging such a presumption relative to Sling TV. At best, Patent Owner cites the Initial Determination of the ALJ in the ITC Investigation. *See* PO Resp. 54 (citing Ex. 1009, 112–13, 133, 151–52, 165–66). We decline to credit the ALJ's analysis in the absence of any developed argument in Patent Owner's papers relative to Sling TV. This also is the epitome of improper incorporation by reference. *See* 37 C.F.R. § 42.6(a)(3). Finally, we note that Patent Owner's evidence of secondary considerations is tied almost exclusively to the MOVE Media Player.

We start with Patent Owner's contention that it is entitled to a presumption of nexus, which is its primary argument on nexus. As evidence that the MOVE Media Player practices the challenged claims, Patent Owner cites, *inter alia*, a document titled "Overview of MoveNetwork's Streaming Media Technology" at Exhibit 2011. *See* PO Resp. 53. Dr. Jeffay also cites this document in support of his analysis that the MOVE Media Player embodies the claimed invention. *See* Ex. 2006 ¶¶ 163, 165–167, 169–171, 173–175. Yet, as highlighted by Petitioner (Pet. Reply 22), the same document states that the "secret" of MOVE's technology "lies in [its] use of multiple TCP connections between the client and the origin web server," in contrast to "[o]ther streaming solutions [that] use a single connection." Ex. 2011, 6; *see also* Ex. 2059, 11 (similar statement in another MOVE document). We agree with Petitioner (Pet. Reply 22) that the plain language of this document—which Patent Owner itself put forth as evidence of nexus—indicates that using multiple TCP connections is a critical unclaimed feature of the MOVE Media Player. Nor does the fact that Patent Owner "***publicly*** disclosed this feature" (PO Sur-reply 24 (citing Ex. 1001, 14:29)) undermine how critical multiple TCP connections were to MOVE's technology.

Further, Petitioner puts forth evidence that the use of multiple parallel TCP connections is claimed in a different patent owned by Patent Owner, U.S. Patent No. 10,225,304. Pet. Reply 22–23 (citing Ex. 1027). This scenario—where a "'critical' unclaimed feature . . . is claimed by a different patent"—is an indicator that the challenged claims are not coextensive with the MOVE Media Player. *Fox Factory*, 944 F.3d at 1375. We also disagree with Patent Owner's argument that claims 6, 8, 9, and 28 of the '138 patent

are drawn to multiple TCP connections. PO Sur-reply 24–25. These claims do not include any limitations directed to TCP.

Although Patent Owner argues that "the existence of one or two unclaimed features, standing alone, [does not] mean[] that nexus may not be presumed" (PO Sur-reply 21 (quoting *Fox Factory*, 944 F.3d at 1374 (alterations added))), Patent Owner's own documents state that multiple TCP connections, an unclaimed feature, is the "secret" of the technology. Ex. 2011, 6; Ex. 2059, 11. Thus, we decline to minimize the importance of multiple TCP connections to the MOVE Media Player. We also have considered Patent Owner's argument that "MOVE [Networks'] and [Patent Owner]'s successes are attributable to more than the mere optional use of multiple TCP connections and HTTP web servers" because "it was precisely the claimed 'streamlets' that enabled clients to request the video portions via simple HTTP request over multiple TCP connections rather than from specialized media servers." PO Sur-reply 23 (quoting Ex. 2011, 3, 7). Yet the very evidence Patent Owner cites for this proposition suggests that any alleged success is due to more than just the streamlets. *See* Ex. 2011, 3 ("The use of streamlets *combined with our other innovative concepts* makes possible" certain enumerated benefits (emphasis added)), 7 (crediting only "the elimination of the need for specialized media servers" as "[a] key and far reaching conceptional and practical innovation" (emphasis omitted)).

Petitioner also has cited evidence that the use of HTTP and standard (non-specialized) servers were other critical unclaimed features of the MOVE Media Player. *See* Ex. 2012, 22; Ex. 2062, 3. Indeed, Patent Owner cites some of these aspects of the MOVE Media Player in support of its commercial success (PO Resp. 61), copying (*id.* at 63), and industry praise

arguments (*id.* at 59–60, 65). The record includes at least some evidence suggesting that these features also were considered significant features of MOVE's technology. *See* Ex. 2006 ¶¶ 46–47 (Dr. Jeffay testifying that he "was impressed by the use of HTTP in the [adaptive bitrate] patents"); Ex. 1021, 145:13–20 (Mr. Major, a named inventor, agreeing that the use of ordinary web servers over HTTP was a core feature of MOVE's adaptive streaming patent technology).

We are mindful that "[a] patent claim is not coextensive with a product that includes a 'critical' unclaimed feature that is claimed by a different patent and that materially impacts the product's functionality." *Fox Factory*, 944 F.3d at 1375. Given that Petitioner has shown multiple TCP connections to be a critical unclaimed feature of the MOVE Media Player that is associated with a different patent (*see* Ex. 1027; Ex. 2011, 6; Ex. 2059, 11), we find that Petitioner has successfully rebutted any presumption of nexus. *See WBIP, LLC v. Kohler Co.*, 829 F.3d 1317, 1329 (Fed. Cir. 2016) (stating that the presumption of nexus can be rebutted when the objective evidence is tied to unclaimed features). Record evidence supporting the significance of HTTP-based video delivery to MOVE's technology (*see* Ex. 2006 ¶¶ 46–47; Ex. 1021, 145:13–20) also tends to rebut any presumption of nexus. For these reasons, we find that Patent Owner is not entitled to a presumption of nexus.

Next, we turn to Patent Owner's evidence of direct nexus. Patent Owner argues that the MOVE Media Player's "real-world benefits . . . are a 'direct result of the unique characteristics of the claimed invention.'" PO Resp. 53 (quoting *Fox Factory*, 944 F.3d at 1373–74) (citing Ex. 2006 ¶¶ 164–186; Ex. 2011). In particular, Patent Owner argues that certain

evidence of praise is tied to "the expressly claimed features, such as 'actively adjusting . . . video quality to the bandwidth available' and delivering 'pieces of content progressively.'" *Id.* at 53–54 (citing Ex. 2023). Patent Owner argues that other evidence of "surprising results and praise are directly tied to the claimed features of the patented ABR technology." *Id.* at 60 (citing Ex. 2006 ¶¶ 185, 198–204). Patent Owner also makes the following general statement regarding direct nexus: "Even without the presumption [of nexus], MOVE's strong commercial success, the surprising results and praise MOVE received, and other secondary considerations directly tied to the MOVE system confirm non-obviousness." PO Sur-reply 26.

Petitioner argues that alleged "unique characteristics" of "actively adjusting . . . video quality to the bandwidth available" and "delivering pieces of content progressively" were already in the prior art, such as Ogdon and a reference known as Leaning,[9] and cannot support a finding of nexus. Pet. Reply 24 (citing *Kao*, 639 F.3d at 1069; Ex. 1004, 3:38–41, 22:10–23; Ex. 1028 ¶¶ 77–80). Otherwise, Petitioner relies on the same arguments discussed above about critical unclaimed features undermining nexus. *Id.* at 22–24.

We agree with Petitioner that "actively adjusting . . . video quality to the bandwidth available" and "delivering pieces of content progressively" were taught by the prior art, namely, Ogdon and Leaning. *See* Ex. 1004,

[9] International Patent Publication No. WO 02/49343 A1, filed Dec. 14, 2001, published June 20, 2002 (Ex. 1024, "Leaning").

3:38–41 (Ogdon teaching "dynamically and adaptively switch[ing] between . . . versions of the presentation according to network transmission characteristics"), 22:10–23 (Ogdon teaching a client node that "select[s] an appropriate content webserver and an appropriate version off the next collection of segments to be retrieved" when the next collection of segments is not cached); Ex. 1024, code (57) (Leaning teaching "switching between alternative sub-file sets representing alternative delivery modes of data rates"), 1:12–19 (Leaning teaching "control means responsive to the state of the buffer to generate request messages for further files for replenishment of the buffer"); *see also* Ex. 1028 ¶¶ 77–80 (Dr. Houh's testimony regarding Ogdon and Leaning). And nexus cannot be predicated on aspects of the technology that are already in the prior art. *See Kao*, 639 F.3d at 1069. Thus, Patent Owner's attempt to establish a direct nexus based on these alleged "unique characteristics" is fatally flawed, and we accord these arguments little or no weight.

In addition, we note that certain other of Patent Owner's statements regarding direct nexus rely on arguments made in exhibits. Specifically, Patent Owner cites broad swaths of Dr. Jeffay's testimony. *See, e.g.*, PO Resp. 53 (citing Ex. 2006 ¶¶ 164–186), 60 (citing Ex. 2006 ¶¶ 185, 198–204). 37 C.F.R. § 42.6(a)(3) states that "[a]rguments must not be incorporated by reference from one document into another document." Further, "parties that incorporate expert testimony by reference in their petitions, motions, or replies without providing explanation of such testimony risk having the testimony not considered by the Board." Patent Trial and Appeal Board Consolidated Trial Practice Guide at 35–36 (Nov. 2019) ("Consolidated Trial Practice Guide"), *available at*

https://www.uspto.gov/sites/default/files/documents/tpgnov.pdf (citing *Cisco Systems, Inc. v. C-Cation Techs., LLC*, IPR2014-00454 (PTAB Aug. 29, 2014) (Paper 12) (informative)). Patent Owner's failure to fully explain its arguments about direct nexus in its main papers represents a separate, independent reason for according such arguments little to no weight.

Despite our determination that Patent Owner's arguments regarding nexus lack merit, we nonetheless briefly discuss Patent Owner's alleged evidence regarding objective indicia of nonobviousness.

(2) Long-Felt Need/Failure of Others

Patent Owner contends that "[t]he claimed invention solved a long-felt need for streaming live and on-demand content over the Internet." PO Resp. 54; *see also* PO Sur-reply 27 (citing Ex. 2006 ¶¶ 189–197; Ex. 2010 ¶¶ 8–13). In particular, Patent Owner cites evidence related to the need for "video content in higher quality," "HD video," "online HDTV," and "high quality, full-screen video content." PO Resp. 55, 57–58. According to Patent Owner, "[c]ompeting technologies attempted but failed to meet this same need." *Id.* at 56 (citing Ex. 2010 ¶¶ 7–10; Ex. 2006 ¶¶ 191–197). In particular, Patent Owner cites evidence of then-existing video streaming failures due to "buffering, hesitancy, delays, stalling, freezing, and unresponsiveness." *Id.* at 55; *see also id.* at 56–57 (citing, *inter alia*, Ex. 2006 ¶¶ 191–197) (similar argument). Patent Owner also argues that entities such as ABC.com and Microsoft eschewed inferior technologies and adopted adaptive bitrate streaming technology with MOVE Networks' "technique of detecting a watcher's bandwidth and CPU capabilities in real

time and then adjusting the quality of a video stream." *Id.* at 57 (quoting Ex. 2036, 1) (citing Ex. 2026, 2; Exs. 2032–2333).[10]

Petitioner argues that any satisfaction of a long-felt need was due to increased Internet bandwidth and advances in computing technology. Pet. Reply 25 (citing Ex. 1028 ¶¶ 81–84).

Patent Owner posits a long-felt need for online high-definition video over the internet (PO Resp. 54; PO Sur-reply 27), and Patent Owner cites various articles in support of that theory. *See, e.g.*, Ex. 2027, 1. Yet Patent Owner also cites evidence that at least one competitor's product, Adobe Flash, was already providing video over the internet, albeit using different technology and for shorter average session times. *See, e.g.*, Ex. 2006 ¶¶ 191, 193; Ex. 2024, 1; Ex. 2028, 1; Ex. 2034. This tends to undermine that Patent Owner's posited need was unmet, or that others had failed. At the same time, Patent Owner's evidence tends to show that MOVE Networks' technology was regarded as superior to Adobe's insofar as it overcame certain problems (e.g., buffering) that users experienced with Adobe's technology. *See, e.g.*, Ex. 2034. This allowed for longer average streaming sessions. *See, e.g.*, Ex. 2024; Ex. 2025, 1; Ex. 2026, 2; Ex. 2038.

Still, even if Patent Owner had defined the alleged long-felt need as a need for improved long-duration, high-definition video over the internet—it did not—we would still find that Patent Owner's evidence tied to the MOVE Media Player lacks a nexus to the claimed invention for the reasons

[10] As discussed below, Petitioner moves to exclude certain emails between MOVE Networks and Microsoft that Patent Owner cites for this proposition. *See infra* § II.F.4. Notwithstanding, we consider these emails as part of our analysis and dismiss the motion to exclude these emails as moot. *See id.*

mentioned above. *See supra* § II.D.3.g.(1). Specifically, Patent Owner's arguments keyed to the "patented ABR [adaptive bitrate] technology" (PO Resp. 54–59) are not sufficient to establish a nexus to the challenged claims. *See supra* § II.D.3.g.(1). In addition, adaptive bitrate streaming was already known in the art. *See id.*

On balance, MOVE Networks' technology was at least associated with desired improvements to longer-duration, high-definition video, but Patent Owner's evidence of nexus is lacking. Thus, we accord Patent Owner's evidence little to no weight.

(3) Unexpected Results

Patent Owner argues that the MOVE Media Player "achieved what many thought impossible, and contributed to a major shift in the industry away from cable/satellite packages to internet streaming (*i.e.*, cord-cutting)." PO Resp. 58 (Ex. 2006 ¶ 198; Ex. 2022; Ex. 2027); *see also* PO Sur-reply 27 (similar argument). In particular, Patent Owner puts forth certain articles expressing surprise at how well the MOVE Media Player performed at the time of its introduction. PO Resp. 58–60 (citing Ex. 2006 ¶¶ 199–202; Exs. 2022, 2027). Patent Owner puts forth some evidence that the MOVE Media Player was regarded as being superior to other streaming technologies at the time. *Id.* at 59 (citing Ex. 2006 ¶¶ 201–202; Ex. 2039).

"Unexpected results that are probative of nonobviousness are those that are 'different in kind and not merely in degree from the results of the prior art.'" *Galderma Lab'ys, L.P. v. Tolmar, Inc.*, 737 F.3d 731, 739 (Fed. Cir. 2013) (quoting *Iron Grip Barbell Co. v. USA Sports, Inc.,* 392 F.3d 1317, 1322 (Fed. Cir. 2004)). Although Patent Owner puts forth some

evidence of users' surprise at the higher quality of the MOVE Media Player's streaming video, the record does not establish that MOVE's streaming video results were of a different and unexpected kind consistent with the holding of *Iron Grip*. The results were still streaming video, as had already existed, albeit at a better quality or degree according to Patent Owner's telling. Further, Patent Owner's evidence suffers from a lack of nexus to the claimed invention, as discussed above. *See supra* § II.D.3.g.(1). For these reasons, we accord Patent Owner's evidence of unexpected results little to no weight.

(4) Commercial Success

Patent Owner argues that, "[w]ithin months of its 2006 commercial launch, the MOVE Media Player was being used to deliver roughly as much data as YouTube and more data than the web sites of CNN, NBC, and CBS, none of which used the MOVE Media Player." PO Resp. 60 (citing Ex. 2006 ¶ 206). Patent Owner also contends that a number of companies adopted MOVE's technology after it was made commercially available. *Id.* at 61 (citing Ex. 2006 ¶¶ 211–229); *see also* PO Sur-reply 26–27 (similar argument). Patent Owner also cites certain investments made in MOVE Networks as being indicative of commercial success. PO Resp. 61–62. Patent Owner additionally cites evidence of various licenses for its adaptive bitrate patents as an indicator of nonobviousness. *Id.* at 62 (citing Ex. 2053, 23 n.100; Exs. 2083–2085).[11]

[11] Patent Owner also cites an Exhibit 2054, but there is no such exhibit in this case.

Petitioner contends that any commercial success was "simply due to increased Internet bandwidth and advances in computing technology, such as interoperability standards and availability of low-cost, large-scale solid state memory—***not*** MOVE's player." Pet. Reply 25 (citing Ex. 1028 ¶¶ 81–84). Petitioner further contends that MOVE later became a commercial failure "[a]s soon as others were able to leverage those advancements with their own streaming products." *Id.* (citing Ex. 2015). Petitioner also discounts Patent Owner's "ability to extract some licenses as part of patent assertion settlements" as objective evidence of nonobviousness. *Id.* at 26 (citing *Iron Grip*, 392 F.3d at 1324).

The evidence of record shows that MOVE Networks as an entity experienced some commercial success, at least initially. By May 2007, MOVE Networks was delivering as much streaming data as YouTube and more streaming data than the CNN, NBC, and CBS websites. *See* Ex. 2024, 1. MOVE Networks also collaborated with industry leaders such as ABC, Microsoft, Fox, Level 3, and ESPN. *See, e.g.,* Exs. 2024, 2029, 2030, 2034; Ex. 2060, 4–5. This evidence tends to undermine Petitioner's argument that MOVE's successes were solely due to improved bandwidth and computing technology, which is based on nothing more than Dr. Houh's generalized view of the state of the art in the mid-1990s. *See* Ex. 1028 ¶ 83.

Notwithstanding, as discussed above, Patent Owner's evidence suffers from a lack of nexus to the claimed invention. *See supra* § II.D.3.g.(1). Indeed, Dr. Jeffay attributes at least some of the success of MOVE Networks' technology to its use of standard web servers, rather than media servers, which is outside the scope of the challenged claims. *See* Ex. 2006 ¶ 209. Further, to the extent that Patent Owner's evidence of commercial

success is tied to MOVE Networks as an entity, or to MOVE's "technology" or "ABR [adaptive bitrate] technology" generally (*see, e.g.*, *id.* ¶¶ 206–210, 212–213, 215–216, 219, 225), it is not sufficiently tied to the claimed invention of the '138 patent to merit significant weight. *See supra* § II.D.3.g.(1).

We also have considered Patent Owner's evidence of licenses for its adaptive bitrate patents. *See* Ex. 2053, 23 n.100; Exs. 2083–2085. We agree with Petitioner (Pet. Reply 26) that licensing evidence is entitled to little weight as an indicator of commercial success where, as here, Patent Owner has not demonstrated a nexus between the invention of the '138 patent and these licenses. *See Iron Grip*, 392 F.3d at 1324 (holding that "the existence of licenses is of little significance" in the absence of nexus evidence).

On balance, we are mindful of our reviewing court's holding that "[i]t is not necessary . . . that the patented invention be solely responsible for the commercial success, in order for this factor to be given weight appropriate to the evidence, along with other pertinent factors." *Cont'l Can Co. USA v. Monsanto Co.*, 948 F.2d 1264, 1273 (Fed. Cir. 1991). Based on the foregoing discussion, we accord some weight, but not significant weight, to Patent Owner's evidence of commercial success.

(5) Copying

Patent Owner contends that, after disclosing its technology to Apple under non-disclosure agreements, Apple developed the "HLS Standard," which was similar to MOVE's technology. PO Resp. 62–63 (citing Exs. 2055, 2056; Ex. 2063, 38:20–40:7); *see also* PO Sur-reply 27 (similar argument). Patent Owner also contends that Microsoft implemented its own

version of "HTTP-based ABR [adaptive bitrate] streaming technology." PO Resp. 63 (citing Exs. 2032, 2033, 2057).[12]

Petitioner replies that Patent Owner's "innuendo that Microsoft and Apple stole and copied its invention after entering into NDAs is unsupported and undermined by the fact that ***[Patent Owner] never sued either company for patent infringement or breach of the NDAs***—litigious as [Patent Owner] is." Pet. Reply 26.

Patent Owner's alleged evidence of copying related to Apple includes non-disclosure agreements (Exs. 2055, 2056) and David Ericson's testimony from the ITC in which he states that the HLS Standard "is very similar to what Move had developed and was using as a proposed standard." Ex. 2063, 38:23–39:7. Mr. Ericson goes on to discuss certain similarities related to "indexing the video encoded segments." *Id.* at 39:11–40:7. We do not discern how this testimony pertains to the claims of the '138 patent, and Patent Owner does not explain as much. We accord it little to no weight. Otherwise, Dr. Jeffay cites an article suggesting that Apple was turning to adaptive bitrate technology. Ex. 2006 ¶ 233 (citing Ex. 2036). But adaptive bitrate technology was already in the prior art, as discussed above. *See supra* § II.D.3.g.(1).

Regarding Microsoft, Patent Owner adduces evidence of collaboration between MOVE Networks and Microsoft. *See* Exs. 2032, 2050. Patent Owner's allegations of copying hinge on Microsoft's "Smooth Streaming"

---

[12] As discussed below, Petitioner moves to exclude certain emails between MOVE Networks and Microsoft that Patent Owner cites for this proposition. *See infra* § II.F.4. Notwithstanding, we consider these emails as part of our analysis and dismiss the motion to exclude these emails as moot. *See id.*

extension implementing adaptive bitrate technology. PO Resp. 63; Ex. 2006 ¶ 234; Ex. 2057. Yet Patent Owner does not establish any particular link between "Smooth Streaming" and the claims of the '138 patent other than the use of adaptive bitrate video streaming (*see* Ex. 2006 ¶ 234; Ex. 2057), which was in the prior art. *See supra* § II.D.3.g.(1)

For these reasons, we accord Patent Owner's evidence of copying little to no weight.

(6) Industry Praise[13]

Patent Owner cites certain articles that use superlative language to describe the MOVE Media Player's performance due to its ability to stream video at an adaptive rate on standard web servers. PO Resp. 59–60 (citing, *inter alia*, Exs. 2024, 2026, 2038, 2040–2043). Other evidence touts the ability of the MOVE Media Player to create streamlets by breaking up the video into bits. *Id.* (citing, *inter alia*, Ex. 2024; Ex. 2026, 2; Ex. 2040). As discussed above, however, the concepts of adaptive rate streaming and dividing the data stream into slices were already in the prior art. *See supra* § II.D.3.g.(1). Further, as also discussed above, the use of standard web servers is an unclaimed feature. *See id.* As such, Patent Owner's evidence tying these features to various laudatory comments lacks a nexus to the claimed invention.

[13] Patent Owner's Response includes two different sections with evidence of industry praise. *See* PO Resp. 58–60 ("Surprising Results and Praise"), 63–65 ("Industry Praise and Peer Recognition"). We discuss both sections together.

Patent Owner also cites a 2020 Emmy award[14] recognizing SlingTV[15] as evidence of industry praise. PO Resp. 63–64 (citing Ex. 2010 ¶ 21; Ex. 2013). Yet SlingTV's own press release states that this award relates to SlingTV's "over-the-top television service" that was "launched February 9, 2015." Ex. 2013. Patent Owner has made no attempt to show a nexus to any SlingTV product (*see supra* note 8), and we find Patent Owner's statement that SlingTV "implemented the patented ABR [adaptive bitrate] technology after [Patent Owner] acquired MOVE [Networks] and the ABR Patents" (PO Resp. 63–64) is insufficient to establish nexus.

Patent Owner also puts forth evidence of other awards: AlwaysOn's OnHollywood 100 (Exs. 2016, 2017), AlwaysOn's OnMedia 100 (Ex. 2018), Red Herring's Global 100[16] (Ex. 2019), and TechCrunchies (Ex. 2020). We have reviewed the underlying evidence of these awards, and we find that none of them relates specifically to the technology claimed in the '138 patent. Indeed, all of these awards appear to have been conferred on MOVE Networks as a business entity. *See, e.g.*, Ex. 2016 ("The OnHollywood 100 was selected from more than 1000 companies").

Patent Owner also cites certain laudatory statements made by "content distributors and competitors," i.e., Televisa (Ex. 2042), Level 3 (Ex. 2044),

---

[14] As discussed below, we strike Patent Owner's arguments regarding an unrelated 2006 Emmy award that appear in Patent Owner's Sur-reply. *See infra* § II.F.2.

[15] Patent Owner states that "Sling TV L.L.C. [is] the exclusive licensee of the '138 patent." Paper 4, 2.

[16] Patent Owner also cites a "Red Herring 100" award (PO Resp. 63), but no evidence of such an award appears in the record aside from Dr. Jeffay's testimony. *See* Ex. 2006 ¶ 243.

and Microsoft (Ex. 2060). PO Resp. 64–65. Of these statements, only Microsoft's arguably relates in part to the patented technology. *Id.* at 64 (quoting Ex. 2060, 4) (discussing "adaptive streaming technology that seamlessly adjusts image quality to fit available bandwidth on each viewer's Internet connection"). And Microsoft's general statement about adaptive streaming technology lacks a nexus to the claimed for the same reasons discussed above. *See supra* § II.D.3.g.(1).

Finally, Patent Owner cites the statements of certain "users" of MOVE's technology. PO Resp. 65 (citing Exs. 2023, 2026, 2043). The evidence backing these statements appears to be certain blog posts from the internet. *See* Exs. 2023, 2026, 2043. The blog posts, along with Dr. Jeffay's supporting testimony (*see* Ex. 2006 ¶¶ 236–238), do not establish why the cited "users" are representative of the views of the industry as a whole. In the absence of such information, we find these statements to be of little evidentiary value.

Having considered Patent Owner's alleged evidence of industry praise, and having considered the deficiencies discussed above in Patent Owner's showing of nexus (*see supra* § II.D.3.g.(1)), we accord this evidence little or no weight.

(7) Conclusion Regarding Secondary Considerations of Nonobviousness

We accord Patent Owner's evidence of commercial success some weight, but not significant weight. We accord Patent Owner's evidence of long-felt need/failure of others, unexpected results, copying, and industry praise little to no weight. In general, Patent Owner's failure to establish a

nexus between the merits of the claimed invention and the alleged secondary considerations undermines the probative value of Patent Owner's evidence as indicia of nonobviousness.

h. Conclusion Regarding Claim 1

Petitioner has shown that the proposed combination of Ogdon and Allen teaches all limitations of claim 1. Petitioner also has put forth a persuasive rationale for combining Allen with Ogdon with a reasonable expectation of success. We find that Patent Owner's evidence of secondary considerations of nonobviousness does not outweigh Petitioner's persuasive obviousness showing under the other *Graham* factors. Thus, we determine that Petitioner has shown by a preponderance of the evidence that the subject matter of claim 1 would have been obvious over the proposed combination of Ogdon and Allen.

4. Claim 3

Claim 3 depends from claim 1 and recites that "the video includes archived content." Ex. 1001, 18:53–54. Petitioner cites Ogdon's teaching that video may include segments that previously have been archived. Pet. 29–30 (citing Ex. 1004, 3:12–14, 10:5–19, Fig. 1A).

Patent Owner relies on the same arguments discussed above. Ogdon teaches that segments can be presented, archived, and "subsequently represented."[17] Ex. 1004, 3:12–14. As such, we are persuaded that Ogdon teaches the limitation in claim 3. Our analysis regarding secondary

[17] We understand this to mean "re-presented."

considerations of nonobviousness discussed above for claim 1 applies equally to this claim. *See supra* § II.D.3.g. Thus, we determine that Petitioner has shown by a preponderance of the evidence that the subject matter of claim 3 would have been obvious over the proposed combination of Ogdon and Allen.

5. Claim 4

Claim 4 depends from claim 1 and recites that

> the second streamlet of each of the groups of streamlets each has the same second duration and corresponds to the same second portion of the video in the low quality stream, the medium quality stream, and the high quality stream, the second streamlet of the low quality stream having the same bitrate as the first streamlet of the low quality stream

Ex. 1001, 18:55–61. Petitioner relies on the same analysis from limitation 1[E]. Pet. 30.

Patent Owner relies on the same arguments discussed above. For the same reasons discussed above, we are persuaded that the proposed combination of Ogdon and Allen teaches claim 4. *See supra* § II.D.3.f. Our analysis regarding secondary considerations of nonobviousness discussed above for claim 1 applies equally to this claim. *See supra* § II.D.3.g. Thus, we determine that Petitioner has shown by a preponderance of the evidence that the subject matter of claim 4 would have been obvious over the proposed combination of Ogdon and Allen.

6. Claim 5

Claim 5 depends from claim 4 and recites that "the first and second durations are different." Ex. 1001, 18:62–63. Petitioner contends that an ordinarily skilled artisan would have known that "it was desirable to 'reduce[] the start-up' for streaming content to beneficially allow the user to view the stream more quickly." Pet. 31 (citing Ex. 1003 ¶ 80; Ex. 1013, 3:29–54). Accordingly, Petitioner contends that an ordinarily skilled artisan would have been motivated to make the duration of the first segment shorter than the duration of the second segment

> because a shorter first segment when requested by the client (*e.g.*, at a low quality) can be more quickly downloaded and played back for the user while the client makes a determination of an appropriate quality level to select for the second streamlet based on a bandwidth determination from receiving the first segment.

Id. Petitioner also contends that it would have been obvious to try different durations because there are only two possible scenarios: segments with the same duration and segments with different durations. *Id.* at 31–32 (citing Ex. 1003 ¶ 81).

Patent Owner relies on the same arguments discussed above. We are persuaded by Petitioner's unrebutted rationale that an ordinarily skilled artisan considering Ogdon's teachings would have known to make the duration of the first segment shorter than that of the second segment to allow for a quicker startup of streaming. *See* Ex. 1003 ¶ 80. This makes sense in Ogdon's adaptive transmission system, which must account for the initial detection of the transmission rate when the connection is relatively slow. *See* Ex. 1004, 3:38–63, code (57). We also agree with Petitioner's obvious-

to-try rationale given that only two possible variations exist. *See* Ex. 1003 ¶ 81. Our analysis regarding secondary considerations of nonobviousness discussed above for claim 1 applies equally to this claim. *See supra* § II.D.3.g. Thus, we determine that Petitioner has shown by a preponderance of the evidence that the subject matter of claim 5 would have been obvious over the proposed combination of Ogdon and Allen.

7. Claim 6

Claim 6 depends from claim 1 and recites that the system further comprises:

> a plurality of web servers located at different locations across the internet, each web server configured to:
>
> receive at least one streamlet request over one or more internet connections from a respective one of the one or more end user stations to retrieve the first streamlet, wherein the at least one streamlet request from the respective one of the one or more end user stations includes a request for a currently selected first streamlet from one of the low quality stream, the medium quality stream, and the high quality stream based upon a determination by the respective one of the one or more end user stations to select a higher or lower bitrate version of a respective one of the plurality of streams;
>
> retrieve from the at least one storage device the requested first streamlet from the currently selected one of the low quality stream, the medium quality stream, and the high quality stream; and
>
> send the retrieved first streamlet to the respective one of the one or more end user stations over the one or more internet connections.

Ex. 1001, 18:64–19:15 (formatting applied). For the "plurality of web servers located at different locations across the internet," Petitioner cites

Ogdon's content webservers 96 (including content webservers 96a and alternate content webservers 96b) "for providing presentation data to client sites 54." Pet. 32 (quoting Ex. 1004, 8:27–31). For the recited "receiv[ing]," Petitioner cites Ogdon's teaching of content webservers 96 receiving requests for presentation segments from clients. *Id.* at 33–34 (citing Ex. 1003 ¶ 83; Ex. 1004, 6:41–44, 7:10–13, 7:59–63, 19:54–59, 21:40–45, 22:12–17). Based on an analysis similar to that of limitation 1[B] (*see supra* § II.D.3.c), Petitioner contends that the proposed combination of Ogdon and Allen teaches client nodes (i.e., the recited "end user stations") selecting stream quality based on their determination that a higher or lower bitrate version is needed. *Id.* at 34–35 (citing Ex. 1003 ¶ 84; Ex. 1004, 23:41–50, 23:51–24:6, 24:50–55). For the recited "retriev[ing]," Petitioner contends that Ogdon's webservers 96 retrieve from the storage device the requested segment (i.e., "streamlet") from the currently selected stream. *Id.* at 35 (citing Ex. 1003 ¶ 85; Ex. 1004, 19:54–67, Fig. 2C). For the recited "send[ing]," Petitioner cites Ogdon's teaching of the webservers sending the requested segments to the client node over an Internet connection. *Id.* at 36 (citing Ex. 1003 ¶ 86; Ex. 1004, 7:59–63, 24:48–49, 25:25–27).

According to Patent Owner, "Claim 6 requires ***different webservers*** that, in response to client requests, each retrieve ***the same*** content from ***the same*** central storage device." PO Resp. 45. Patent Owner likens the recitations in claim 6 to the proxy cache servers described in the '138 patent. *Id.* at 46 (citing Ex. 1001, 7:1–6). Patent Owner argues that, in contrast, "Ogdon's separate webservers each retrieve ***different*** content from their ***own local storage device***; they do not each retrieve content from ***the same central storage device***, as claimed." *Id.* at 45–46 (citing Ex. 2006 ¶ 138).

We agree with Patent Owner. Petitioner already has mapped the recited "at least one storage device" to Ogdon's webservers 96 in its analysis for claim 1. *See* Pet. 21. For claim 6, Petitioner maps the recited "plurality of web servers" to the same elements in Ogdon, i.e., webservers 96. *See id.* at 32. Petitioner's analysis for claim 6 then breaks down for the following recitation: "retrieve from the at least one storage device the requested first streamlet." *See id.* at 35. Petitioner essentially relies on one of Ogdon's webservers 96 retrieving the streamlet from itself. *Id.* ("[T]he webserver(s) 96 retrieve from the storage device the requested streamlet (segment)."). Petitioner does not provide any explanation as to how this could be interpreted in a coherent way consistent with Ogdon's teachings. Thus, we are not persuaded by Petitioner's analysis for claim 6. We determine that Petitioner has not shown by a preponderance of the evidence that the subject matter of claim 6 would have been obvious over the proposed combination of Ogdon and Allen.

8. Claim 7

Claim 7 depends from claim 1 and recites that "each of the first streamlets has a first duration that is the range of 0.1 to 5 seconds." Ex. 1001, 19:16–18. Citing testimony from Dr. Houh, Petitioner contends that an ordinarily skilled artisan

> would have been motivated to make the first duration (of each of the first segments) 1 second or 2 seconds because this would minimize download time and allow playback to begin quickly while also allowing the client to make a bandwidth determination and provide sufficient time for the client to request further sequential segments to queue for playback.

Pet. 36–37 (citing Ex. 1003 ¶ 87). Petitioner also contends it would have been obvious to try a duration in the range of 0.1 to 5 seconds because an ordinarily skilled artisan

> would have to assign some duration to the first segment such that the segments are sufficiently long to allow for quick playback but sufficiently short in duration to allow for rapid switching to different quality levels as necessary—this duration would have to be on the order of single digit seconds (*e.g.*, 1-5 seconds), double digit seconds, or minutes.

Id. at 37 (citing Ex. 1003 ¶ 87). Petitioner additionally contends that an ordinarily skilled artisan would have expected success in implementing these time frames "because the segments all have *some* duration and merely adjusting the duration the first segment so that the first segment duration between 0.1 to 5 seconds in duration would have been a simple and straightforward modification." *Id.* Petitioner also argues that it would have been obvious to try a duration of the first segment between 0.1 to 5 seconds as allegedly being among a finite number of possible solutions. *Id.*

Patent Owner relies on the same arguments discussed above. Petitioner's contentions are premised on the same startup considerations in Ogdon's system discussed above with respect to claim 5, which allegedly would have led an ordinarily skilled artisan to implement a first video segment duration in the range of 0.1 to 5 seconds. *See* Ex. 1003 ¶ 87; *see also id.* ¶ 80; Ex. 1004, 3:38–63, code (57); Ex. 1013, 3:29–54; *supra* § II.D.6. In particular, Petitioner contends that the first segment must be "sufficiently long to allow for quick playback but sufficiently short in duration to allow for rapid switching to different quality levels as necessary." Pet. 37 (citing Ex. 1003 ¶ 87). Although we agree with this

reasoning, we are not persuaded that these considerations would have rendered obvious the particular range of 0.1 to 5 seconds as the recited "first duration." Petitioner has presented no evidence of a particular time interval and instead relies on the *ipse dixit* of Dr. Houh, which we find insufficient to carry Petitioner's burden of persuasion. *See* Ex. 1003 ¶ 87. We also disagree that this range would have been obvious to try because the potential first interval time frames are not finite.

Thus, we determine that Petitioner has not shown by a preponderance of the evidence that the subject matter of claim 7 would have been obvious over the proposed combination of Ogdon and Allen.

9. Claim 8

Claim 8 depends from claim 1 and recites that the system of claim 1 further comprises:

> a first web server configured to:
>
> receive at least one streamlet request over one or more internet connections from the one or more end user stations to retrieve the first streamlet storing the first portion of the video, wherein the at least one streamlet request from the one or more end user stations includes a request for a currently selected first streamlet from one of the low quality stream, the medium quality stream, and the high quality stream based upon a determination by the end user station to select a higher or lower bitrate version of the video;
>
> retrieve from the storage device the requested first streamlet from the currently selected one of the low quality stream, the medium quality stream, and the high quality stream; and
>
> send the retrieved first streamlet from the currently selected one of the low quality stream, the medium quality

> stream, and the high quality stream to the requesting one of the end user stations over the one or more network connections.

Ex. 1001, 19:19–37 (formatting applied). Petitioner relies on the same analysis from claim 6. Pet. 37–38. Thus, for the reasons discussed above, we are not persuaded by Petitioner's analysis for claim 8. *See supra* § II.D.7. We determine that Petitioner has not shown by a preponderance of the evidence that the subject matter of claim 8 would have been obvious over the proposed combination of Ogdon and Allen.

10. Claims 9–13

Claims 9–13 depend directly or indirectly from claim 8. *See* Ex. 1001, 19:38–54. Petitioner's analysis for claims 9–13 builds upon and incorporates the same deficiencies discussed above with respect to claim 8. *See* Pet. 38–42; *supra* §§ II.D.7, II.D.9. Thus, we determine that Petitioner has not shown by a preponderance of the evidence that the subject matter of claims 9–13 would have been obvious over the proposed combination of Ogdon and Allen.

11. Claim 14

a. Preamble (14[Pre])

The preamble of claim 14 recites "[a]n end user station to stream a video over a network from a server for playback of the video." Ex. 1001, 19:55–57. Petitioner relies on the same analysis from the preamble of claim 1 to establish that "Ogdon discloses an end user station (client node(s) 56) to stream a video (video presentation) over a network (Internet) from a server (content webserver(s) 96) for playback of the video." Pet. 42–

43. Patent Owner relies on the same arguments discussed above. For the same reasons discussed above with respect to the preamble of claim 1, we find that Ogdon teaches or at least suggests the preamble. *See supra* § II.D.3.a.

b. Limitation 14[A] and 14[B]

Claim 14 further recites "a processor" and "a digital processing apparatus memory device." Ex. 1001, 19:58–60. The recited digital processing apparatus memory device comprises "non-transitory machine-readable instructions that, when executed, cause the processor to" perform steps similar to the recited functionalities of the system of claim 1. *Id.* at 19:60–20:29. For the recited processor, Petitioner cites Ogdon's teaching that a client node can be a personal computer. Pet. 43 (citing Ex. 1004, 7:45). Petitioner further cites Ogdon's teachings of software running on a client node and contends that and ordinarily skilled artisan "would have understood that a client node personal computer running software, as disclosed in Ogdon discloses a digital processing apparatus memory device comprising non-transitory machine-readable instructions." *Id.* at 43–44 (citing Ex. 1003 ¶¶ 104–105; Ex. 1004, 7:45, 7:53–63). Patent Owner does not dispute Petitioner's analysis. We are persuaded by Petitioner's analysis and find that Ogdon teaches limitations 14[A] and 14[B].

c. Limitation 14[C][1]

Claim 14 further recites that the instructions cause the processor to "establish an internet connection between the end user station and the server." Ex. 1001, 19:62–63. Petitioner cites Ogdon's teaching of the

webservers and the clients being connected by an internet connection. Pet. 45 (citing Ex. 1004, 2:1–10, 7:59–63, 19:34–44, 19:53–58, claim 7). Patent Owner does not dispute Petitioner's analysis. We are persuaded by Petitioner's analysis and find that Ogdon teaches limitation 14[C][1].

d. Limitation 14[C][2]

Claim 14 further recites that "the server is configured to access at least one of a plurality of groups of streamlets." Ex. 1001, 19:63–65. Petitioner cites Ogdon's teaching of the webservers accessing collections or subcollections of segments. Pet. 46 (citing Ex. 1004, 2:43–49, 9:30–31, 9:44–46). Patent Owner does not dispute Petitioner's analysis. We are persuaded by Petitioner's analysis and find that Ogdon teaches limitation 14[C][2].

e. Limitations 14[C][3] through 14[C][6]

Claim 14 further recites:

> wherein the video is encoded at a plurality of different bitrates to create a plurality of streams including at least a low quality stream, a medium quality stream, and a high quality stream, each of the low quality stream, the medium quality stream, and the high quality stream comprising a group of streamlets encoded at the same respective one of the different bitrates, each group comprising at least first and second streamlets, each of the streamlets corresponding to a portion of the video;
>
> wherein at least one of the low quality stream, the medium quality stream, and the high quality stream is encoded at a bitrate of no less than 600 kbps; and wherein the first streamlets of each of the low quality stream, the medium quality stream and the high quality stream each has an equal playback duration

> and each of the first streamlets encodes the same portion of the video at a different one of the different bitrates.

Ex. 1001, 19:66–20:17 (Limitations 14[C][3] through 14[C][6]). Petitioner relies on the same analysis from limitations 1[B] through 1[E] discussed above for claim 1. Pet. 46–47. Patent Owner relies on the same arguments discussed above. For the same reasons discussed above, we find that the proposed combination of Ogdon and Allen teaches limitations 14[C][3] through 14[C][6] and that a person of ordinary skill in the art would have had reason to combine Allen with Ogdon in the manner suggested by Petitioner. *See supra* §§ II.D.3.c–f.

f. Limitation 14[D]

Claim 14 further recites that the instructions cause the processor to "select a specific one of the low quality stream, the medium quality stream, and the high quality stream based upon a determination by the end user station to select a higher or lower bitrate version of the streams." Ex. 1001, 20:18–22. Petitioner relies in part on its analysis for limitation 14[C][3], which in turn relies on the analysis for limitation 1[B]. Pet. 46–47. Petitioner additionally cites Ogdon's teaching of a client requesting particular quality of segments based on data transmission characteristics at the client node. Pet. 47–49 (citing Ex. 1004, 6:41–44, 7:10–13, 7:59–63, 13:47–49, 19:54–59, 21:40–45, 22:12–17, 22:44–47, 23:41–50, 23:51–24:6, 24:50–55, code (57)).

Patent Owner argues that "Petitioner relies ***solely*** on Ogdon as allegedly disclosing th[is] limitation[]." PO Resp. 44. Patent Owner also

rehashes various arguments alleging deficiencies with Ogdon and Allen. *Id.* at 44–45.

As a point of clarification, we do not agree with Patent Owner that Petitioner relies solely on Ogdon for limitation 14[D]; Petitioner also cites its analysis based on "Ogdon in view of Allen" for limitation 14[C][3], which in turn relies on the analysis for limitation 1[B]. *See* Pet. 46–47. Petitioner's analysis for limitation 1[B] proposes a combination of Ogdon and Allen (*see* Pet. 22–24), and we find the analysis persuasive above. *See supra* II.D.3.c. As such, we do not agree with Patent Owner's arguments to the extent they attempt to limit Petitioner's analysis to Ogdon alone.

Otherwise, Patent Owner relies on the same arguments discussed above. We are persuaded by Petitioner's showing regarding limitation 14[D] for the same reasons discussed above with respect to limitation 1[B]. *See supra* § II.D.3.c.

g. Limitation 14[E]

Claim 14 further recites that the instructions cause the processor to "place a streamlet request to the server over the internet connection for the first streamlet of the selected stream." Ex. 1001, 20:23–25. Petitioner cites Ogdon's teaching of client nodes requesting segments from a content webserver. Pet. 49–50 (citing Ex. 1004, 6:41–44, 7:10–13, 7:59–63). Patent Owner argues that Ogdon does not teach a "streamlet request" because "Ogdon describes making ***batch*** requests to retrieve an entire 'collection' of segments." PO Resp. 40–41 (citing Ex. 1004, 2:39–42, 22:55–58, 23:41–54, 24:17–21, 24:40–49, 24:60–65; Ex. 2006 ¶¶ 124–129).

In its Reply, Petitioner argues that nothing in the claim language requires the recited "streamlet request" to cover only one streamlet and no more. Pet. Reply 11. Petitioner further notes that Ogdon teaches that a requested collection of segments can include "***one*** or more" segments. *Id.* at 12 (citing Ex. 1004, 21:15, 22:30–33; Ex. 1028 ¶¶ 48–49). Patent Owner characterizes this argument from Petitioner's Reply as contradicting Petitioner's mapping of the recited "group of streamlets" to Ogdon's "subcollection of [multiple] segments." PO Sur-reply 10 (alteration by Patent Owner) (citing Pet. 24).

We are persuaded by Petitioner's showing that Ogdon teaches the recited "streamlet request." *See, e.g.*, Ex. 1004, 6:41–44, 7:10–13, 7:59–63. We agree with Petitioner that nothing in the claim language limits a "streamlet request" to requesting a single streamlet. Thus, even if Ogdon's client requests more than one streamlet including the "first streamlet," we find that Ogdon teaches limitation 14[E]. We also are persuaded by Petitioner's argument that a request for subcollection with a single segment in Ogdon would also teach limitation 14[E] even under Patent Owner's narrow interpretation of this limitation. *See* Ex. 1004, 21:15, 22:30–33. Contrary to Patent Owner's argument (PO Sur-reply 10), we do not find Petitioner's argument to be inconsistent with its mapping of "group of streamlets" because Petitioner's cited teachings from Ogdon are broad enough to cover all manner of "collections," "subcollections," etc.

For these reasons, we are persuaded by Petitioner's analysis and find that Ogdon teaches limitation 14[E].

h. Limitation 14[F]

Claim 14 further recites that the instructions cause the processor to "receive the requested first streamlet from the server via the internet connection; and provide the received first streamlet for playback of the video." Ex. 1001, 20:26–29. Petitioner cites Ogdon's teaching of a client node receiving a requested segment and displaying the segment as appropriate. Pet. 50 (citing Ex. 1004, 7:59–63, 23:45–50). Patent Owner does not dispute Petitioner's analysis. We are persuaded by Petitioner's analysis and find that Ogdon teaches limitation 14[F].

i. Conclusion Regarding Claim 14

Petitioner has shown that the proposed combination of Ogdon and Allen teaches all limitations of claim 14. Petitioner also has put forth a persuasive rationale for combining Allen with Ogdon with a reasonable expectation of success. *See supra* § II.D.3.c. We find that Patent Owner's evidence of secondary considerations of nonobviousness does not outweigh Petitioner's persuasive obviousness showing under the other *Graham* factors. *See supra* § II.D.3.g. Thus, we determine that Petitioner has shown by a preponderance of the evidence that the subject matter of claim 14 would have been obvious over the proposed combination of Ogdon and Allen.

12. Claims 15 and 16

Claims 15 and 16 are similar in scope to claims 4 and 5, respectively. *Compare* Ex. 1001, 20:30–38, *with id.* at 18:55–63. Petitioner relies on the same analysis for these claims that we have discussed above. Pet. 51.

Patent Owner relies on the same arguments discussed above. For the same reasons discussed above, we are persuaded that the proposed combination of Ogdon and Allen teaches claims 15 and 16. *See supra* §§ II.D.5–6. Our analysis regarding secondary considerations of nonobviousness discussed above for claim 1 applies equally to this claim. *See supra* § II.D.3.g. Thus, we determine that Petitioner has shown by a preponderance of the evidence that the subject matter of claims 15 and 16 would have been obvious over the proposed combination of Ogdon and Allen.

13. Claim 17

Claim 17 is similar in scope to claim 7. *Compare* Ex. 1001, 20:39–41, *with id.* at 19:16–18. Petitioner relies on the same analysis from claim 7 that we have discussed above. Pet. 51. As such, Petitioner's analysis for claims 17 incorporates the same deficiencies discussed above with respect to claim 7. *See supra* § II.D.8. Thus, we determine that Petitioner has shown by a preponderance of the evidence that the subject matter of claim 17 would have been obvious over the proposed combination of Ogdon and Allen.

14. Claim 18

Claim 18 depends from claim 14 and recites that "the end user station is further configured to: request and receive a virtual timeline; and wherein one or more streamlet requests are based on the received virtual timeline." Ex. 1001, 20:42–45. Petitioner relies on its analysis with respect to claim 9

(Pet. 51), which we will now discuss.[18] Petitioner contends that Ogdon's client nodes send requests for a playlist to webserver 96, and webserver 96 sends the playlist to the client nodes. Pet. 38–39 (citing Ex. 1003 ¶ 92). Petitioner contends alternatively that Ogdon's "scripts" teach the virtual timeline. *Id.* at 39. Petitioner cites Ogdon's teachings of "ordering of predefined segments (or subcollections thereof) . . . presented and archived, and subsequently represented" and that "sequentially-ordered scripts can be created." *Id.* (citing Ex. 1004, 3:11–23, 9:27–33, claim 16).

Patent Owner argues that "Ogdon's 'scripts' cannot be read onto the claimed 'virtual timeline' because the challenged claims require that a server (*e.g.*, a 'web server') send the 'virtual timeline' to the ***client*** (*e.g.*, an 'end user station')." PO Resp. 39. Patent Owner explains that Ogdon's content manager 104 "distributes presentation data, such as scripting information for a presentation," and that a host must "request the one or more scripts for the presentation from the content manager 104" before providing them to "client nodes 56" for "presentation performance to their respective audience members." *Id.* (quoting Ex. 1004, 9:31–33, 18:37–40, 21:50–58). Thus, according to Patent Owner, "Ogdon's server sends a script to hosts—not clients," and "Ogdon fails to disclose or suggest a client requesting its 'script' or a server response to the client." *Id.* (citing Ex. 2006 ¶ 141).

---

[18] We determine above that Petitioner has not has shown by a preponderance of the evidence that the subject matter of claim 9 would have been obvious over the proposed combination of Ogdon and Allen. *See supra* § II.D.10. This determination is based on Petitioner's analysis incorporating deficiencies from its analysis for claim 8, from which claim 9 depends. *See id.* Thus, we consider the merits of Petitioner's arguments regarding the subject matter of claim 9 for the first time in this Decision.

In its Reply, Petitioner argues that "Ogdon teaches a client request for a virtual timeline in at least the same level of detail as the '138 Patent," and that Dr. Jeffay confirmed that "there is no disclosure [in the '138 patent] concerning how a 'virtual timeline' is requested or received between a client or server." Pet. Reply 20 (citing Ex. 1001, 12:31–13:2; Ex. 1030, 251:9–252:10). Petitioner further notes Dr. Jeffay's cross-examination testimony that no such description was necessary because it would have been "incredibly straightforward" for an ordinarily skilled artisan to configure "a web server configured to receive a virtual timeline request over an internet connection from one or more end user stations." *Id.* at 20–21 (quoting Ex. 1030, 253:10–23). Petitioner also cites testimony from Dr. Houh's reply declaration supporting that it would have been obvious and "incredibly straightforward" to have a client request a virtual timeline rather than a host. *Id.* at 21 (citing Ex. 1028 ¶¶ 65–68).

In its Sur-reply, Patent Owner argues that Petitioner's proposed "incredibly straightforward" modification from the Reply is an improper new theory that is not in the Petition. PO Sur-reply 19. Patent Owner also argues that this modification is flawed in light of the role of Ogdon's host to resolve placeholders and identifiers in generic scripts into specific content resources. *Id.* at 19–20 (citing Ex. 1004, 12:44–52, 21:30–39).

Based on the entire trial record, we find that Petitioner has not persuasively shown that Ogdon teaches the recited end user station requesting and receiving a virtual timeline. First, Petitioner's initial position—that Ogdon's webserver 96 receives requests from client nodes and then sends a virtual timeline in response—does not appear to be based on any particular teaching in Ogdon. Pet. 38–39 (citing Ex. 1003 ¶ 92).

Dr. Houh's cited testimony likewise includes no citations to Ogdon and, rather, relies on a separate patent publication. *See* Ex. 1003 ¶ 92 (citing Ex. 1008, 7:10–8:15, 10:15–22). As such, this theory is not persuasive because it is not grounded in any particular teaching from Ogdon. And Petitioner appears to have shifted away from this theory.

Second, Petitioner's alternative theory from the Petition based on Ogdon's scripts seemingly ignores the fact that Ogdon's host, rather than the client nodes, requests the scripts. As noted by Patent Owner (PO Resp. 39), "the host 200 . . . request[s] the one or more scripts for the presentation from the content manager 104." Ex. 1004, 18:37–40. The host then transmits presentation commands to the client nodes. *Id.* at 21:50–58. Thus, Ogdon's scripts do not teach claim 18 at least because (1) the end user station does not make the request; and (2) the host's presentation commands, rather than the end user station's streamlet requests, drive the presentation.

Third, we agree with Patent Owner (PO Sur-reply 19) that Petitioner's "incredibly straightforward" modification based on Dr. Jeffay's cross-examination testimony is an improper new theory that is presented for the first time in the Reply. *See* 37 C.F.R. § 42.23(b) ("A reply may only respond to arguments raised in the corresponding . . . patent owner response."); *see also* Consolidated Trial Practice Guide at 74 ("'Respond,' in the context of 37 C.F.R. § 42.23(b), does not mean proceed in a new direction with a new approach as compared to the positions taken in a prior filing."). Thus, we decline to entertain Petitioner's new theory. And, even if we were to entertain such a modification, Petitioner's theory does not account for Ogdon's host's role in resolving placeholders and identifiers in

generic scripts. *See* Ex. 1004, 12:44–52, 21:30–39. This potential flaw tends to undermine Petitioner's new theory.

We have considered Petitioner's shifting and varied positions with respect to claim 18, and we are not persuaded by them. We determine that Petitioner has shown by a preponderance of the evidence that the subject matter of claim 18 would have been obvious over the proposed combination of Ogdon and Allen.

15. Claims 19 and 20

Claims 19 and 20 each depend from claim 18. *See* Ex. 1001, 20:46–51. Petitioner's analysis for claims 19 and 20 builds upon and incorporates the same deficiencies discussed above with respect to claim 18. *See* Pet. 41–42, 51; *supra* §§ II.D.14. Thus, we determine that Petitioner has not shown by a preponderance of the evidence that the subject matter of claims 19 and 20 would have been obvious over the proposed combination of Ogdon and Allen.

16. Claim 22

Claim 22 depends from claim 14 and recites that "the video includes archived content." Ex. 1001, 20:54–55. Petitioner relies on the same analysis discussed above for claim 3. Pet. 52. Patent Owner relies on the same arguments discussed above. We are persuaded that Ogdon teaches the limitation in claim 22 for the same reasons discussed above with respect to claim 3. *See supra* § II.D.4. Our analysis regarding secondary considerations of nonobviousness discussed above for claim 1 applies equally to this claim. *See supra* § II.D.3.g. Thus, we determine that

Petitioner has shown by a preponderance of the evidence that the subject matter of claim 22 would have been obvious over the proposed combination of Ogdon and Allen.

17. Claim 23

Independent claim 23 recites "[a] process executable by one or more servers to stream a video for playback by one or more end user stations, the process comprising" steps similar to the functionalities recited in claims 1 and 6. Ex. 1001, 20:56–21:32. Petitioner relies on the same analysis from claims 1 and 6. Pet. 52–53. For example, Petitioner maps the recited "end user stations" to Ogdon's client nodes and the recited "servers" to Ogdon's content webservers. *See, e.g., id.* at 20–21. For the limitations of claim 23 that rely on the analysis for claim 1 (designated by Petitioner as the preamble (23[Pre]) and limitations 23[A] through 23[D]; *see id.* at 52–53), we are persuaded by Petitioner's analysis for the same reasons mentioned above. *See supra* § II.D.3. For the limitations of claim 23 that rely on the analysis for claim 6, we make the following additional findings.

Claim 23 recites "receiving at least one streamlet request over an internet connection from a respective one of the one or more end user stations to retrieve the first streamlet storing the first portion of the video." Ex. 1001, 21:12–15 ("limitation 23[E]"). Petitioner cites its analysis from claim 6 regarding Ogdon's webservers 96 receiving requests for presentation segments from clients. *See, e.g.*, Pet. 33–34 (citing Ex. 1003 ¶ 83; Ex. 1004, 6:41–44, 7:10–13, 7:59–63, 19:54–59, 21:40–45, 22:12–17), 53; *see also supra* § II.D.7. We already have considered Patent Owner's arguments disputing that Ogdon teaches an individual "streamlet request" (PO Resp.

40–43), and we disagree with them for the reasons discussed above. *See supra* § II.D.11.g. We find that Ogdon teaches limitation 23[E].

Claim 23 further recites

> wherein the at least one streamlet request from the respective one of the one or more end user stations includes a request for a currently selected first streamlet from one of the low quality stream, the medium quality stream, and the high quality stream based upon a determination by the respective one of the one or more end user stations to select a higher or lower bitrate version of the video.

Ex. 1001, 21:16–23 ("limitation 23[F]"). Petitioner cites its analysis based on the combination of Ogdon and Allen from claim 6 for teaching that client nodes select stream quality based on their determination that a higher or lower bitrate version is needed. *See, e.g.*, Pet. 34–35 (citing Ex. 1003 ¶ 84; Ex. 1004, 23:41–50, 23:51–24:6, 24:50–55), 53; *see also supra* § II.D.7. Patent Owner relies on the same arguments discussed above. We find that Ogdon teaches limitation 23[F].

Claim 23 further recites "retrieving from the one or more servers the requested first streamlet from the currently selected one of the low quality stream, the medium quality stream, and the high quality stream." Ex. 1001, 21:24–27 ("limitation 23[G]"). Petitioner cites its analysis from claim 6 regarding Ogdon's webservers 96 retrieving from the storage device the requested segment from the currently selected stream. *See, e.g.*, Pet. 35 (citing Ex. 1003 ¶ 85; Ex. 1004, 19:54–67, Fig. 2C), 53; *see also supra* § II.D.7. Patent Owner's arguments discussed above (*see supra* § II.D.7) regarding separate web servers performing the role of proxy cache servers (PO Resp. 45–46) do not apply to claim 23, which does not have the same

requirements for a "web server[]" retrieving a streamlet from a separate "storage device" like claim 6. We find that Ogdon teaches limitation 23[G].

Claim 23 further recites "sending the retrieved first streamlet from the currently selected one of the low quality stream, the medium quality stream, and the high quality stream to the respective one of the one of the end user stations over the internet connection." Ex. 1001, 21:28–32 ("limitation 23[H]"). Petitioner cites its analysis from claim 6 regarding Ogdon's webservers sending the requested segments to the client node over an Internet connection. *See, e.g.*, Pet. 36 (citing Ex. 1003 ¶ 86; Ex. 1004, 7:59–63, 24:48–49, 25:25–27), 53; *see also supra* § II.D.7. Patent Owner relies on the same arguments discussed above. We find that Ogdon teaches limitation 23[H].

Petitioner has shown that the proposed combination of Ogdon and Allen teaches all limitations of claim 23. Petitioner also has put forth a persuasive rationale for combining Allen with Ogdon with a reasonable expectation of success. *See supra* § II.D.3.c. We find that Patent Owner's evidence of secondary considerations of nonobviousness does not outweigh Petitioner's persuasive obviousness showing under the other *Graham* factors. *See supra* § II.D.3.g. Thus, we determine that Petitioner has shown by a preponderance of the evidence that the subject matter of claim 23 would have been obvious over the proposed combination of Ogdon and Allen.

18. Claim 24

Claim 24 is similar in scope to claims 4 and 15. *Compare* Ex. 1001, 18:55–61, *with id.* at 20:30–36, *and id.* at 21:33–39. Petitioner cites its

analysis from claim 15, which in turn cites the analysis from claim 4. Pet. 51, 54.

Patent Owner relies on the same arguments discussed above. For the same reasons discussed above, we are persuaded that the proposed combination of Ogdon and Allen teaches claim 24. *See supra* §§ II.D.5. Our analysis regarding secondary considerations of nonobviousness discussed above for claim 1 applies equally to this claim. *See supra* § II.D.3.g. Thus, we determine that Petitioner has shown by a preponderance of the evidence that the subject matter of claim 24 would have been obvious over the proposed combination of Ogdon and Allen.

19. Claim 25

Claim 25 is similar in scope to claim 5. *Compare* Ex. 1001, 18:62–63, *with id.* at 21:40–41. Petitioner cites its analysis from claim 5. Pet. 54.

Patent Owner relies on the same arguments discussed above. For the same reasons discussed above, we are persuaded that the combination of Ogdon and Allen teaches claim 25. *See supra* §§ II.D.6. Our analysis regarding secondary considerations of nonobviousness discussed above for claim 1 applies equally to this claim. *See supra* § II.D.3.g. Thus, we determine that Petitioner has shown by a preponderance of the evidence that the subject matter of claim 25 would have been obvious over the proposed combination of Ogdon and Allen.

20. Claim 27

Claim 27 is similar in scope to claim 3. *Compare* Ex. 1001, 18:53–54, *with id.* at 21:44–45. Petitioner cites its analysis from claim 3. Pet. 54.

Patent Owner relies on the same arguments discussed above. For the same reasons discussed above, we are persuaded that the combination of Ogdon and Allen teaches claim 27. *See supra* §§ II.D.4. Our analysis regarding secondary considerations of nonobviousness discussed above for claim 1 applies equally to this claim. *See supra* § II.D.3.g. Thus, we determine that Petitioner has shown by a preponderance of the evidence that the subject matter of claim 27 would have been obvious over the proposed combination of Ogdon and Allen.

21. Claim 28

Independent claim 28 recites "[a] process executable by a content player device to stream a video over a network from a server for playback of the video by the content player device, the process comprising" steps similar to those recited in claim 14. Ex. 1001, 22:1–39. Petitioner relies on the same analysis from claim 14. Pet. 54–56. For example, Petitioner maps the recited "content player device" to Ogdon's client nodes and the recited "server" to Ogdon's content webservers. *See, e.g., id.* at 42–43.

Patent Owner relies on the same arguments discussed above. We are persuaded by Petitioner's analysis that the proposed combination of Ogdon and Allen teaches all limitations of claim 28 for the same reasons mentioned above. *See supra* § II.D.11. We find that Patent Owner's evidence of secondary considerations of nonobviousness does not outweigh Petitioner's persuasive obviousness showing under the other *Graham* factors. *See supra* § II.D.3.g. Thus, we determine that Petitioner has shown by a preponderance of the evidence that the subject matter of claim 28 would have been obvious over the proposed combination of Ogdon and Allen.

22. Claim 29

Claim 29 is similar in scope to claim 3. *Compare* Ex. 1001, 18:53–54, *with id.* at 22:40–41. Petitioner cites its analysis from claim 3. Pet. 56.

Patent Owner relies on the same arguments discussed above. For the same reasons discussed above, we are persuaded that the combination of Ogdon and Allen teaches claim 29. *See supra* §§ II.D.4. Our analysis regarding secondary considerations of nonobviousness discussed above for claim 1 applies equally to this claim. *See supra* § II.D.3.g. Thus, we determine that Petitioner has shown by a preponderance of the evidence that the subject matter of claim 29 would have been obvious over the proposed combination of Ogdon and Allen.

E. Obviousness Grounds Based on Ogdon, Allen, and SMIL 2.0

Petitioner contends the subject matter of claims 1, 3–12, 14–20, 22–25, and 27–29 would have been obvious over the proposed combination Ogdon, Allen, and SMIL 2.0. Pet. 56–60; Pet. Reply 21. Patent Owner disputes Petitioner's contentions. PO Resp. 47–66; PO Sur-reply 20–27.

We already have determined that Petitioner has shown, by a preponderance of the evidence, that the subject matter of claims 1, 3–5, 14–16, 22–25, and 27–29 would have been obvious over the proposed combination of Ogdon and Allen. Thus, we do not reach Petitioner's challenges of these claims based on the combination of Ogdon, Allen, and SMIL 2.0. *See SAS Inst. Inc. v. Iancu*, 138 S. Ct. 1348, 1359 (2018) (holding a petitioner "is entitled to a final written decision addressing all of the claims it has challenged"); *Bos. Sci. Scimed, Inc. v. Cook Grp. Inc.*, 809 F. App'x 984, 990 (Fed. Cir. 2020) (non-precedential) (recognizing that

"[t]he Board has the discretion to decline to decide additional instituted grounds once the petitioner has prevailed on all its challenged claims"). Accordingly, we only address Petitioner's challenges in this ground for claims 6–13 and 17–20.

1. SMIL 2.0

SMIL 2.0 is a technical specification titled *Synchronized Multimedia Integration Language (SMIL 2.0)* that is directed to "an XML-based language that allows authors to write interactive multimedia presentations." Ex. 1006, Abstract. The language allows users to "describe the temporal behavior of a multimedia presentation, associate hyperlinks with media objects and describe the layout of the presentation on a screen." *Id.*

Petitioner contends that SMIL 2.0 was publicly accessible on the World Wide Web Consortium's website at least as of November 9, 2001, and, as such, is prior art under at least 35 U.S.C. § 102(b). Pet. 18. In support of its argument, Petitioner provides printouts from the Internet Archive along with a declaration from Nathaniel E. Frank-White, an Internet Archive employee. Ex. 1011. Patent Owner does not contest the prior art status of SMIL 2.0. We determine that SMIL 2.0 qualifies as a prior art printed publication under 35 U.S.C. § 102(b) because SMIL 2.0's public accessibility date of November 9, 2001, is more than one year before the earliest effective filing date of the challenged claims, which is April 30, 2004. Ex. 1001, code (60); Ex. 1011.

2. Claims 6 and 8–13

We determine above that Petitioner has not shown by a preponderance of the evidence that the subject matter of claims 6 and 8–13 would have been obvious over the proposed combination of Ogdon and Allen. *See supra* §§ II.D.7, II.D.9, II.D.10. Our determination is based on a discrepancy in Petitioner's mapping whereby it maps both the recited "storage device" and the recited "web server" to the same element in Ogdon, webserver 96. *See supra* § II.D.7. Petitioner does not explain how Ogdon's webserver could "retrieve the requested first streamlet" from itself consistent with the claim language. *See id.*

Petitioner's further contentions based on SMIL 2.0 for these claims pertain to the "same first duration" and "virtual timeline" limitations. Pet. 56–60. They do not cure the deficiencies discussed above. Thus, we determine that Petitioner has not shown by a preponderance of the evidence that the subject matter of claims 6 and 8–13 would have been obvious over the proposed combination of Ogdon, Allen, and SMIL 2.0.

3. Claims 7 and 17

Claim 7 depends from claim 1 and recites that "each of the first streamlets has a first duration that is the range of 0.1 to 5 seconds." Ex. 1001, 19:16–18. Building upon its analysis in the Ogdon–Allen ground, Petitioner cites "a SMIL element called '<switch>' that 'allows an author to specify a set of alternative elements encoded at different quality levels from

which only the first acceptable element is chosen.'"[19] Pet. 57 (quoting Ex. 1006, 61). Petitioner also cites "a SMIL element called '<seq>' which 'defines a sequence' such that 'media elements play one after the other' . . . and control[s] duration of such media elements using the 'dur' attribute." *Id.* (quoting Ex. 1006, 158) (citing Ex. 1006, 125–28). Petitioner additionally cites an example from SMIL 2.0 using "<seq>" and "dur" that allegedly shows alternative segments of an equal duration, 5 seconds. *Id.* at 57–58 (citing Ex. 1003 ¶¶ 146–149; Ex. 1006, 273); *see also id.* at 59 (referencing same).

Based on these teachings, Petitioner contends that an ordinarily skilled artisan

> would have been motivated to ensure that each alternative segment in Ogdon had the same (equal) duration, *e.g.*, 5 seconds as taught by SMIL 2.0, in order to ensure that when a switch is made to an alternative segment the alternative segment is a perfect replacement for preferred segment and so that when switching to a different version during the presentation the user still experiences a seamless presentation.

Pet. 58 (citing Ex. 1003 ¶ 149). Petitioner also argues that an ordinarily skilled artisan would have expected success in making this "straightforward modification" because "both Ogdon and SMIL 2.0 are drawn to similar

[19] This quotation from the Petition does not appear to accurately reflect the language in SMIL 2.0. The actual language in SMIL 2.0 is: "The switch element allows an author to specify a set of alternative elements from which only the first acceptable element is chosen." Ex. 1006, 61. Notwithstanding, the surrounding discussion in SMIL 2.0 supports Petitioner's premise. *See id.* at 61–62.

systems of client-server based streaming including allowing the client to determine which alternative files to choose based on system attributes." *Id.*

Patent Owner relies on the same arguments discussed above. We are persuaded that SMIL 2.0 teaches alternative media elements having a duration of 5 seconds, which is included in the range recited in claim 7. *See* Ex. 1006, 273. We also are persuaded by Petitioner's rationale for implementing alternative segments of equal duration in the Ogdon–Allen system, i.e., to ensure a seamless presentation when switching between presentation versions. *See, e.g.*, Ex. 1003 ¶ 149. We also are persuaded that an ordinarily skilled artisan would have expected success in implementing the 5-second duration in the Ogdon–Allen system. *See id.* Our analysis regarding secondary considerations of nonobviousness discussed above for claim 1 of the Ogdon–Allen ground applies equally to this claim. *See supra* § II.D.3.g.

Thus, we determine that Petitioner has shown by a preponderance of the evidence that the subject matter of claim 7 would have been obvious over the proposed combination of Ogdon, Allen, and SMIL 2.0.

Claim 17 depends from claim 14 and is similar in scope to claim 7. *Compare* Ex. 1001, 20:39–41, *with id.* at 19:16–18. Petitioner relies on the same analysis from claim 7 that we have discussed above. Pet. 59. For the same reasons discussed directly above, we determine that Petitioner has shown by a preponderance of the evidence that the subject matter of claim 17 would have been obvious over the proposed combination of Ogdon, Allen, and SMIL 2.0.

4. Claims 18–20

We find above that Petitioner has not persuasively shown that Ogdon teaches the recited end user station requesting and receiving a virtual timeline, as is recited in claims 18–20. *See supra* § II.D.13–14. In particular, we determined that Petitioner has not persuasively shown that Ogdon teaches the recited end user station requesting and receiving a virtual timeline. *See id.*

Building on its analysis from the Ogdon–Allen ground, Petitioner contends that SMIL 2.0 teaches a "virtual timeline" in the form of "a playlist of entire content files." Pet. 59. In particular, Petitioner cites SMIL 2.0's teaching of generating a playlist of entire content files, e.g., "vid2.mpg" followed by "vid3.mpg," using the "<seq>" element. *Id.* (citing Ex. 1006, 207). But these additional contentions characterize the recited virtual timeline itself; they do not cure the deficiencies in Petitioner's analysis for claim 18 in the Ogdon–Allen ground, which pertain to a failure to show how the end user station requests and receives a virtual timeline. Thus, the same deficiencies remain in the instant ground for claim 18, as well as for claims 19 and 20, which depend from claim 18. For these reasons, we determine that Petitioner has not shown by a preponderance of the evidence that the subject matter of claims 18–20 would have been obvious over the proposed combination of Ogdon, Allen, and SMIL 2.0.

F. Petitioner's Motion to Exclude

Petitioner moves to exclude several groupings of information under 37 C.F.R. § 42.64(c):[20] (1) Patent Owner's purported supplemental evidence comprising testimony from David R. Ericson at Exhibits 2090 and 2092; (2) portions of the deposition transcript of Dr. Houh at Exhibit 2091; (3) Patent Owner's citation to an Emmy website in its Sur-reply; and (4) a collection of email chains from non-declarants and third parties at Exhibits 2031–2033, 2049, 2057, 2071, 2078, 2079, and 2081. Exclude Mot. 1–2 & n.1. We now consider the parties' arguments regarding these materials.

1. Exhibits 2090 (Ericson Declaration) and 2092 (Ericson Deposition Transcript)

Exhibit 2090 is a declaration of David R. Ericson that Patent Owner served on Petitioner as supplemental evidence on August 9, 2024. *See* Paper 23, 1. At the very least, this supplemental evidence relates to Petitioner's evidentiary objections for Exhibit 2063, which is an excerpt of Mr. Ericson's deposition transcript from the related ITC matter.[21] *See* Paper 21, 2. In response to Patent Owner's service of Exhibit 2090,

[20] We note that certain aspects of Petitioner's motion to exclude would be characterized more precisely as a motion to strike. *See* Consolidated Trial Practice Guide at 80 (noting that a motion to strike is appropriate where a brief "raises new issues, is accompanied by belatedly presented evidence, or otherwise exceeds the proper scope of reply or sur-reply"). To the extent necessary, and as discussed below, we exercise our discretion to treat these aspects of Petitioner's motion to exclude as a motion to strike.

[21] At the oral hearing, Patent Owner asserted that this supplemental evidence also pertains to Petitioner's evidentiary objections to certain email exhibits. *See* Tr. 81:17–83:15. We reject that argument below.

Petitioner noticed and took the deposition of Mr. Ericson. *See* Paper 29. Notwithstanding, Petitioner never ultimately moved to exclude Exhibit 2063, the underlying evidence to which Petitioner objected.

Despite there being no motion to exclude Exhibit 2063, Patent Owner still filed Mr. Ericson's declaration as Exhibit 2090 and a transcript of Mr. Ericson's deposition as Exhibit 2092 with Patent Owner's opposition to Petitioner's motion to exclude. *See* Exclude Opp. 8 n.4, 13 n.7. As such, Petitioner moves to exclude Exhibits 2090 and 2092 because, *inter alia*, this evidence is moot given the lack of a motion to exclude for Exhibit 2063. Exclude Mot. 2 n.1;[22] Exclude Reply 3. Patent Owner argues that Petitioner is seeking to suppress the supplemental evidence, and Patent Owner contends we should infer the evidence is unfavorable to Petitioner. Exclude Opp. 8 n.4, 13 n.7; *see also* PO Sur-reply 22 n.6 (similar argument).

We agree with Petitioner that Patent Owner's filing of Exhibits 2090 and 2092 purportedly as supplemental evidence is improper given that Petitioner never moved to exclude the underlying evidence to which Petitioner objected, which is Exhibit 2063. "Supplemental evidence . . . is filed only in support of an opposition to a motion to exclude." Consolidated Trial Practice Guide at 79; *see also* Rules of Practice for Trials Before the Patent Trial and Appeal Board and Judicial Review of Patent Trial and Appeal Board Decisions, 77 Fed. Reg. 48,612, 48,624 (Aug. 14, 2012) ("The Board will not ordinarily address an objection, unless the objecting party

[22] As noted by Patent Owner (Exclude Opp. 13 n.7), Petitioner misidentifies Exhibit 2063 as "Exhibit 2036" in its Motion to Exclude. *See* Exclude Mot. 2 n.1.

filed a motion to exclude under § 42.64(c), because the objection might have been cured or might prove unimportant in light of subsequent developments."). Although Patent Owner filed Exhibits 2090 and 2092 with its opposition to Petitioner's motion to exclude, Patent Owner references these exhibits in relation to other evidentiary objections that are unrelated to Exhibit 2063. *See* Exclude Opp. 8 (mentioning, but not citing, Mr. Ericson's deposition in relation to Petitioner's evidentiary objections for certain emails), 12–14 (citing Mr. Ericson's deposition testimony in relation to Petitioner's evidentiary objections for an Emmy Award website citation). In this way, Patent Owner's filing and use of Exhibit 2090 and 2092 is not apt.

Patent Owner could have, but did not, offer initial direct testimony from Mr. Ericson in this proceeding, and Patent Owner instead chose to rely on the excerpt of his testimony from the ITC at Exhibit 2063 when it filed its Response. After being challenged with evidentiary objections to Exhibit 2063, Patent Owner not only used the declaration at Exhibit 2090 to overcome the objections (*see, e.g.*, Ex. 2090 ¶ 5), but also sought to fill out the record on a number of other matters that are not mentioned in the ITC transcript. *See, e.g.*, *id.* ¶¶ 8 (testimony regarding 2020 SlingTV Emmy award), 16 (testimony regarding commercial success with respect to "Disney, FOX, and Discovery"), 18 (testimony regarding Microsoft's "Smooth Streaming" solution). Some of these topics—most particularly the 2020 SlingTV Emmy award—came up in the subsequent deposition taken by Petitioner. At that time, Mr. Ericson recalled another, different 2006 Emmy award for ABC.com. *See* Ex. 2092, 131:20–132:11. Subsequently, Patent Owner sought to use Mr. Ericson's testimony about the 2006 ABC.com Emmy award as new evidence of objective indicia of

nonobviousness. *See* Exclude Opp. 12–15 (arguing the merits of Patent Owner's evidence of objective indicia based in part on Mr. Ericson's deposition testimony); PO Sur-reply 22–23 (citing Patent Owner's counsel reading Mr. Ericson's deposition testimony during the deposition of Dr. Houh). This goes far beyond the intended use of the supplemental evidence process, which is to provide an opportunity for a party to cure an evidentiary objection. *See* 37 C.F.R. § 42.64(b)(2).

Nor do we agree with Patent Owner that Petitioner "opened the door" to new evidence (Exclude Opp. 13–14) by deposing Mr. Ericson on his declaration that was served as supplemental evidence. Petitioner had a right to cross-examine Mr. Ericson on his new declaration before deciding whether to move to exclude the underlying ITC testimony (Exhibit 2063) to which Petitioner objected. *See* 37 C.F.R. § 42.51(b)(1)(ii). The deposition was not a vehicle for Patent Owner to develop new and different evidence or for Patent Owner to advance its case-in-chief.[23] And, once Petitioner decided not to move to exclude Exhibit 2063, neither the new declaration (Exhibit 2090) nor the deposition transcript (Exhibit 2092) was admissible.

Finally, we have considered Patent Owner's assertion at the oral hearing that Mr. Ericson's declaration at Exhibit 2090 also was offered to respond Petitioner's objections regarding certain MOVE Networks emails. *See* Tr. 81:17–83:15. We find this assertion to be baseless. First, no part of Mr. Ericson's testimony addresses the emails, and no emails are cited in his declaration. *See generally* Ex. 2090. Second, Patent Owner provides no

[23] Again, Patent Owner could have prepared and filed a declaration from Mr. Ericson for this proceeding with its Response. It did not.

specific argument based on Mr. Ericson's declaration in its response to Petitioner's motion to exclude the emails. *See* Exclude Opp. 8 (merely mentioning the deposition of Mr. Ericson). Third, Patent Owner itself characterizes Mr. Ericson's declaration as "supplemental evidence following [Petitioner's] objection to EX2063." *Id.* at 13 n.7. Thus, Patent Owner's *ex post* rationale based on email objections is spurious.

For these reasons, we strike Exhibits 2090 and 2092 as being improperly filed supplemental evidence.[24]

2. Information Related to 2006 ABC.com Emmy Award

Petitioner moves to exclude two portions of Dr. Houh's second deposition transcript (Ex. 2091, 91:9–94:21, 104:23–106:14) as improper sur-reply evidence under 37 C.F.R. § 42.23(b). Exclude Mot. 10. Patent Owner cites these two deposition portions to support its contention that ABC.com won an Emmy award in 2006. PO Sur-reply 22–23 (citing Ex. 2091, 94:8–21, 105:16–106:14). Petitioner also asks us to disregard Patent Owner's Sur-reply arguments based on this evidence. Exclude Mot. 10.

Petitioner explains that the two portions of the deposition transcript comprise Patent Owner's "counsel paraphrasing and quoting from an unadmitted document into the record." Exclude Mot. 10. Petitioner also moves to exclude a citation to an Emmy website that is introduced for the

[24] Although we strike certain materials for purposes of rendering this Decision, we nonetheless maintain a complete record of the evidence to facilitate review.

first time in Patent Owner's Sur-reply. *Id.* at 12 (citing PO Sur-reply 24 n.7). This citation relates to Patent Owner's argument that "ABC's use of MOVE's technology resulted in an Emmy Award in 2006, shortly after the priority date of the challenged patent." PO Sur-reply 24.

Patent Owner argues that the details surrounding the 2006 Emmy award are admissible because they were elicited by Petitioner during cross-examination of Mr. Ericson. Exclude Opp. 12. Patent Owner also argues that Petitioner and Dr. Houh attempted to undercut Patent Owner's proffered evidence about a 2020 Emmy award by suggesting that the award is attributable to unclaimed features. *Id.* (citing Pet. Reply 25).[25] As such, Patent Owner states that it "raised the 2006 Emmy at Dr. Houh's deposition in direct response to [Petitioner's] mischaracterizations of the technology driving MOVE's and Sling TV's industry praise." *Id.*

We agree with Petitioner that Patent Owner's allusions to the alleged 2006 ABC.com Emmy award amount to improper argument for a sur-reply under 37 C.F.R. § 42.23(b). Patent Owner could have, but did not, cite the 2006 award in its Response as evidence of secondary considerations of nonobviousness. Instead, Patent Owner attempts to place the 2006 Emmy award at issue in its Sur-reply simply because Petitioner allegedly "attempted to undercut the 2020 Emmy."[26] Exclude Opp. 12. But

---

[25] Patent Owner mistakenly cites to "Paper 36, at 29," but the context makes clear that Patent Owner intended to cite to Paper 37 (Petitioner's Reply) at 25.

[26] Contrary to Patent Owner's assertions (Exclude Opp. 12), we do not discern any particular reply argument by Petitioner or Dr. Houh that "attempted to undercut the 2020 Emmy." Instead, the passage cited by Patent Owner is general argument related to "any supposed commercial

ABC.com's 2006 award is wholly different from SlingTV's 2020 award. The only connection between the two is that they both appear to be Emmy awards for similar technology. In other words, we do not understand how assertions about the 2006 award could be deemed responsive to arguments made against the 2020 award. *See* 37 C.F.R. § 42.23(b) ("A sur-reply may only respond to arguments raised in the corresponding reply."). Thus, we find Patent Owner's allusions to the 2006 award to be "a new direction with a new approach as compared to the positions taken in a prior filing." Consolidated Trial Practice Guide at 74.

Further, Patent Owner's questioning regarding the 2006 ABC.com Emmy award during Dr. Houh's second deposition amounts to an awkward and improper attempt by Patent Owner to avail itself of 37 C.F.R. § 42.23(b)'s safe haven for "deposition transcripts of the cross-examination of any reply witness." The portion of testimony at issue comprises Patent Owner's counsel asking Dr. Houh about Mr. Ericson's deposition testimony. *See* Ex. 2091, 92:2–15 (Patent Owner's counsel presenting Dr. Houh with "Exhibit 5," which he represents as "a deposition of Dave Ericson taken in these proceedings"). During the line of questioning, Dr. Houh never testifies as to any personal knowledge or previous consideration of Mr. Ericson's testimony. *See id.* at 104:23–105:6. Instead, Patent Owner's counsel merely paraphrased Mr. Ericson's testimony and asked Dr. Houh if he saw the

---

success, long-felt need, or surprising results." Pet. Reply 25. Still, we assume for purposes of this analysis that Petitioner directly sought to "undercut the 2020 Emmy."

testimony in the transcript. *See id.* at 93:4–5 ("[T]he reference is an Emmy. Do you see that?"), 93:21–23 ("[Y]ou see that Mr. Ericson says the Emmy was awarded in 2020, correct?"), 94:10–12 ("[D]o you see that Mr. Ericson in an answer begins describing an Emmy award that ABC won?"), 94:14–16 ("And do you see he says the Emmy was for ABC.com that was obviously using Move's technology?"). We decline to allow new sur-reply evidence of the 2006 Emmy award simply because Patent Owner uses Dr. Houh as a mouthpiece for such evidence. Thus, we strike these portions of Dr. Houh's deposition (Ex. 2091, 91:9–94:21, 104:23–106:14) as improper sur-reply evidence and the related portions of the Sur-reply (PO Sur-reply 22–23) as improper sur-reply argument.

Petitioner also moves to exclude a citation to the Emmy website that appears in a footnote of Patent Owner's Sur-reply in support of Patent Owner's arguments about the 2006 Emmy award. Exclude Mot. 1, 12 (citing PO Sur-reply 24 n.7). In particular, Petitioner argues that the cited website is not an exhibit in this proceeding and that it is part of Patent Owner's improper sur-reply argument under 37 C.F.R. § 42.23(b). *Id.* at 12. We agree with Petitioner for reasons similar to those above. In particular, Patent Owner's allusions to the 2006 Emmy award amount to improper sur-reply argument. In addition, the cited Emmy website is not an exhibit; we only consider evidence filed in the form of an exhibit. *See* 37 C.F.R. § 42.63(a). Thus, we strike Patent Owner's reference to the Emmy website (PO Sur-reply 24 n.7) and do not consider the website as part of this Decision.

3. Information Related to Microsoft M.Show Commercial Product

Petitioner moves to exclude another portion of Dr. Houh's second deposition transcript (Ex. 2091, 21:16–24:4) as improper sur-reply evidence under 37 C.F.R. § 42.23(b). Exclude Mot. 7–8. Patent Owner cites this portion to support an argument related to a Microsoft product known as M.Show. PO Sur-reply 8 (citing Ex. 2091, 21:16–24:4). Petitioner contends that the cited testimony amounts to Patent Owner's "counsel reading from an unadmitted document during Dr. Houh's deposition while asking Dr. Houh repeatedly, '[d]o you see that?'" Exclude Mot. 7 (citing Ex. 2091, 22:16–24:4). Petitioner also asks us to exclude this portion of Dr. Houh's deposition transcript under various Federal Rules of Evidence. *Id.* at 8–9. Petitioner additionally asks us to disregard Patent Owner's Sur-reply arguments based on this deposition testimony. Exclude Mot. 8.

Patent Owner argues that this portion of the deposition related to Patent Owner "challeng[ing] Dr. Houh's opinions" about M.Show (*see* Ex. 1028 ¶ 44) "by confronting him with contradictory evidence during his deposition." Exclude Opp. 10–11.

In rendering this Decision, we rely on neither Dr. Houh's testimony elicited by Patent Owner's counsel using the unadmitted exhibit (Ex. 2091, 21:16–24:4), nor Dr. Houh's underlying testimony to which it allegedly relates (Ex. 1028 ¶ 44). Thus, we dismiss as moot Petitioner's motion to exclude this portion of Dr. Houh's second deposition transcript and the related argument in the Sur-reply.

4. Exhibits 2031–2033, 2049, 2057, 2071, 2078, 2079, and 2081

Petitioner moves to exclude Exhibits 2031–2033, 2049, 2057, 2071, 2078, 2079, and 2081 under various Federal Rules of Evidence. Exclude Mot. 3–6. According to Patent Owner, these exhibits are confidential business records that consist of "e-mails between executives from MOVE [Networks] and Microsoft or Level 3 Communications." Exclude Opp. 5, 9. Patent Owner cites Exhibits 2031–2033, 2049, and 2057 in support of its assertions of long-felt need (*see, e.g.*, PO Resp. 56–57), commercial success (*see, e.g.*, *id.* at 61), and copying (*see, e.g.*, *id.* at 63). As noted by Petitioner (Exclude Mot. 5), Exhibits 2071, 2078, 2079, and 2081 are only cited in Dr. Jeffay's declaration in support of Patent Owner's assertions of various secondary considerations of nonobviousness. *See* Ex. 2006 ¶¶ 219, 221, 223.

We have determined that certain challenged claims are unpatentable despite this evidence. *See supra* §§ II.D.3–6, 11–12, 16–19, 20–22, II.E.3. Under these circumstances, we find the better course of action is to maintain a complete record of the evidence to facilitate review rather than to exclude these exhibits. Thus, we dismiss as moot Petitioner's motion to exclude Exhibits 2031–2033, 2049, 2057, 2071, 2078, 2079, and 2081.

III. CONCLUSION[27]

Petitioner has shown, by a preponderance of the evidence, that (1) the subject matter of claims 1, 3–5, 14–16, 22–25, 27–29 of the '138 patent would have been obvious over the proposed combination of Ogdon and Allen; and (2) the subject matter of claims 7 and 17 of the '138 patent would have been obvious over the proposed combination of Ogdon, Allen, and SMIL 2.0. Petitioner has not shown, by a preponderance of the evidence, that (3) the subject matter of claims 6–13 and 17–20 of the '138 patent would have been obvious over the proposed combination of Ogdon and Allen; and (4) the subject matter of claims 6, 8–13, and 18–20 of the '138 patent would have been obvious over the proposed combination of Ogdon, Allen, and SMIL 2.0. We also strike the following materials in response to Petitioner's Motion to Exclude: (1) Exhibits 2090 (Ericson Declaration) and 2092 (Ericson Deposition Transcript); (2) Testimony elicited from Dr. Houh regarding a 2006 ABC.com Emmy award (Ex. 2091, 91:9–94:21, 104:23–106:14) and related argument in Patent Owner's Sur-reply (PO Sur-reply 22–23); and (3) Patent Owner's reference to the Emmy website in Patent

[27] Should Patent Owner wish to pursue amendment of the challenged claims in a reissue or reexamination proceeding subsequent to the issuance of this Decision, we draw Patent Owner's attention to the April 2019 *Notice Regarding Options for Amendments by Patent Owner Through Reissue or Reexamination During a Pending AIA Trial Proceeding*. *See* 84 Fed. Reg. 16,654 (Apr. 22, 2019). If Patent Owner chooses to file a reissue application or a request for reexamination of the challenged patent, we remind Patent Owner of its continuing obligation to notify the Board of any such related matters in updated mandatory notices. *See* 37 C.F.R. § 42.8(a)(3), (b)(2).

Owner's Sur-reply (PO Sur-reply 24 n.7). Otherwise, we dismiss-as-moot Petitioner's Motion to Exclude.

In summary:

Claim(s)	35 U.S.C. §	Reference(s)/Basis	Claim(s) Shown Unpatentable	Claim(s) Not shown Unpatentable
1, 3–12, 14–20, 22–25, 27–29	103(a)	Ogdon, Allen	1, 3–5, 14–16, 22–25, 27–29	6–13, 17–20
1, 3–12, 14–20, 22–25, 27–29	103(a)	Ogdon, Allen, SMIL 2.0[28]	7, 17	6, 8–13, 18–20
Overall Outcome			1, 3–5, 7, 14–17, 22–25, 27–29	6, 8–13, 18–20

[28] We do not reach Petitioner's challenges for claims 1, 3–5, 14–17, 22–25, and 27–29 in this ground because we have determined that these claims are unpatentable under the Ogdon–Allen ground. *See supra* § II.D.

IV. ORDER

Accordingly, it is

ORDERED that claims 1, 3–5, 7, 14–17, 22–25, and 27–29 of the ’138 patent are unpatentable;

FURTHER ORDERED that claims 6, 8–13, and 18–20 of the ’138 patent are not unpatentable;

FURTHER ORDERED that, in response to Petitioner’s Motion to Exclude (Paper 49), the following materials are stricken from the record: (1) Exhibits 2090 (Ericson Declaration) and 2092 (Ericson Deposition Transcript); (2) Testimony elicited from Dr. Houh regarding a 2006 ABC.com Emmy award (Ex. 2091, 91:9–94:21, 104:23–106:14) and related argument in Patent Owner’s Sur-reply (PO Sur-reply 22–23); and (3) Patent Owner’s reference to the Emmy website in Patent Owner’s Sur-reply (PO Sur-reply 24 n.7);

FURTHER ORDERED that Petitioner’s Motion to Exclude (Paper 49) is *dismissed as moot* in all other respects; and

FURTHER ORDERED that, because this is a Final Written Decision, parties to this proceeding seeking judicial review of our decision must comply with the notice and service requirements of 37 C.F.R. § 90.2.

For PETITIONER:

Frank Gasparo
Ian Paquette
Philip Sheng
Parker G. Zimmerman
VENABLE LLP
fmgasparo@venable.com
igpaquette@venable.com
ptsheng@venable.com
PGZimmerman@Venable.com

Inge Osman
Tara Elliott
Richard Frenkel
Rebecca Rabenstein
Steven Peters
LATHAM & WATKINS LLP
inge.osman@lw.com
tara.elliott@lw.com
rick.frenkel@lw.com
rebecca.rabenstein@lw.com
steven.peters@lw.com

For PATENT OWNER:

Eliot D. Williams
G. Hopkins Guy III
Ali Dhanani
Thomas B. Carter Jr.
Andrew Wilson
Jamie R. Lynn
BAKER BOTTS L.L.P.
DishvMindGeek@BakerBotts.com
Eliot.williams@bakerbotts.com

Hop.guy@bakerbotts.com
Ali.dhanani@bakerbotts.com
Thomas.carter@bakerbotts.com
Andrew.wilson@bakerbotts.com
Jamie.lynn@bakerbotts.com

Director_PTABDecision_Review@uspto.gov
571.272.7822

Paper 67
Date: August 28, 2025

UNITED STATES PATENT AND TRADEMARK OFFICE

BEFORE THE OFFICE OF THE UNDER SECRETARY OF COMMERCE FOR INTELLECTUAL PROPERTY AND DIRECTOR OF THE UNITED STATES PATENT AND TRADEMARK OFFICE

AYLO FREESITES LTD and FUBOTV MEDIA INC.,
Petitioner,

v.

DISH TECHNOLOGIES L.L.C.,
Patent Owner.

IPR2024-00043 (Patent 11,677,798 B2)
IPR2024-00044 (Patent 11,470,138 B2)
IPR2024-00045 (Patent 10,469,554 B2)
IPR2024-00046 (Patent 10,951,680 B2)
IPR2024-00146 (Patent 10,469,555 B2)[1]

Before COKE MORGAN STEWART, *Acting Under Secretary of Commerce for Intellectual Property and Acting Director of the United States Patent and Trademark Office.*

ORDER

---

[1] This order applies to each of the above-listed proceedings. fuboTV Media Inc. filed a petition in each of IPR2024-00901, IPR2024-00902, IPR2024-00903, IPR2024-00904, and IPR2024-00905, and has been joined as a petitioner to each of the above-listed proceedings.

The Office received a request for Director Review of the Final Written Decision in each of the above-captioned cases and an authorized response to each request. *See* Papers 64, 65.[2]

Having considered the requests and responses, it is:

ORDERED that the requests for Director Review are denied.

[2] Citations are to the record in IPR2024-00043. The parties filed similar papers in IPR2024-00044, IPR2024-00045, IPR2024-00046, and IPR2024-00146.

IPR2024-00043 (Patent 11,677,798 B2)
IPR2024-00044 (Patent 11,470,138 B2)
IPR2024-00045 (Patent 10,469,554 B2)
IPR2024-00046 (Patent 10,951,680 B2)
IPR2024-00146 (Patent 10,469,555 B2)

FOR PETITIONER:

Frank M. Gasparo
Ian G. Paquette
Philip T. Sheng
Parker G. Zimmerman
VENABLE LLP
fmgasparo@venable.com
igpaquette@venable.com
ptsheng@venable.com
pgzimmerman@venable.com

For PETITIONER (IPR2024-00901 Joined)

Inge Osman
Tara Elliott
Richard Frenkel
Rebecca Rabenstein
Steven Peters
LATHAM & WATKINS LLP
inge.osman@lw.com
tara.elliott@lw.com
rick.frenkel@lw.com
rebecca.rabenstein@lw.com
steven.peters@lw.com

For PATENT OWNER:

Eliot D. Williams
G. Hopkins Guy III
Ali Dhanani
Thomas B. Carter Jr.
Andrew Wilson
Jamie R. Lynn
BAKER BOTTS L.L.P.
eliot.williams@bakerbotts.com
hop.guy@bakerbotts.com

IPR2024-00043 (Patent 11,677,798 B2)
IPR2024-00044 (Patent 11,470,138 B2)
IPR2024-00045 (Patent 10,469,554 B2)
IPR2024-00046 (Patent 10,951,680 B2)
IPR2024-00146 (Patent 10,469,555 B2)

ali.dhanani@bakerbotts.com
thomas.carter@bakerbotts.com
andrew.wilson@bakerbotts.com
jamie.lynn@bakerbotts.com

Trials@uspto.gov
571-272-7822

Paper 70
Date: October 6, 2025

UNITED STATES PATENT AND TRADEMARK OFFICE

BEFORE THE PATENT TRIAL AND APPEAL BOARD

AYLO FREESITES LTD and FUBOTV MEDIA INC.,
Petitioner,

v.

DISH TECHNOLOGIES L.L.C.,
Patent Owner.

IPR2024-00044[1]
Patent 11,470,138 B2

Before THU A. DANG, MICHELLE N. WORMMEESTER, and JOHN A. HUDALLA, *Administrative Patent Judges*.

HUDALLA, *Administrative Patent Judge*.

DECISION
Denying Petitioner's Request for Rehearing
of Final Written Decision
37 C.F.R. § 42.71(d)

---

[1] fuboTV Media Inc., which filed a petition in IPR2024-00902, has been joined as a petitioner in this proceeding.

I. INTRODUCTION

On May 14, 2025, Aylo Freesites Ltd ("Petitioner") filed a request for rehearing (Paper 64, "Req. Reh'g") of our Final Written Decision (Paper 60, "Final Dec.), in which the we held that, *inter alia*, Petitioner had not shown by a preponderance of the evidence that claims 6 and 8 of U.S. Patent No. 11,470,138 B2 (Ex. 1001, "the '138 patent") are unpatentable.[2] Final Dec. 58–60, 62–63, 82, 96–97. For the reasons explained below, Petitioner's request for rehearing is *denied*.

II. ANALYSIS

The party requesting rehearing has the burden of showing the decision should be modified, which includes specifically identifying all matters the party believes we misapprehended or overlooked, and the place where each matter was previously addressed in a motion, an opposition, or a reply. *See* 37 C.F.R. § 42.71(d).

In our Final Written Decision, we determined that Petitioner had not shown by a preponderance of the evidence that (1) the subject matter of claims 6 and 8[3] is unpatentable over the combination of U.S. Patent No. 6,161,137 (Ex. 1004, "Ogdon") and International Patent Publication No. WO 02/075482 A2 (Ex. 1005, "Allen"); and (2) the subject matter of claims 6 and 8 is unpatentable over the combination of Ogdon, Allen, and *Synchronized Multimedia Integration Language (SMIL 2.0)* (Ex. 1006, "SMIL 2.0"). Final

[2] Separately, Patent Owner filed a Request for Director Review of the Final Written Decision on the same day. Paper 65. The Acting Director subsequently denied Patent Owner's Request (Paper 67), which returned jurisdiction to us to dispose of the instant request for rehearing.

[3] Claims 6 and 8 each depend from claim 1.

Dec. 58–60, 62–63, 82. In particular, we were not persuaded by Petitioner's analysis based on Ogdon regarding the recited "at least one storage device" in claim 1 and the following recitations in claim 6: "plurality of web servers" and "retrieve from the at least one storage device the requested first streamlet." Dec. 58–60. We were not persuaded by Petitioner's analysis for claim 8 for similar reasons. *See id.* at 62–63.

In the Petition, Petitioner mapped the "at least one storage device" of claim 1, the "plurality of web servers" of claim 6, and the "first web server" of claim 8 to Ogdon's webservers 96. Pet. 21 (citing Ex. 1003 ¶ 63; Ex. 1004, 9:30–31, 9:44–46, 10:7–13, Fig. 2C, claim 21), 32 (citing Ex. 1003 ¶ 82; Ex. 1004, 8:27–31), 37 (relying on claim 6 analysis). We explained in our Decision that Petitioner's analysis for claim 6 breaks down when it relies on a "web server" (i.e., Ogdon's webservers 96) retrieving a requested first streamlet from "the at least one storage device" (i.e., also Ogdon's webservers 96). Dec. 60. We found that "Petitioner does not provide any explanation as to how this could be interpreted in a coherent way consistent with Ogdon's teachings." *Id.* We noted that the same deficiencies applied to Petitioner's contentions for claim 8. *Id.* at 63.

Petitioner presents two major arguments in its request for rehearing, the substance of which is the same for both claims 6 and 8 despite minor differences in claim language (e.g., "plurality of web servers" vs. "first web server"). First, Petitioner argues that "the Petition did not map 'the at least one storage device' and the 'plurality of web servers' / 'first web server' to the ***same*** element." Req. Reh'g 9. According to Petitioner, the Petition's analysis for the "at least one storage device" stated that "Ogdon discloses the webserver(s) store the video," which Petitioner now interprets as "stor[ing] to a

local or network accessible storage device" using "the necessary hard disk or cache." *Id.* (citing Pet. 21, 35; Ex. 1004, 19:54–67). Petitioner also argues that Ogdon's webservers 96, i.e., the "plurality of web servers" in claim 6 and the "first web server" in claim 8, "necessarily access at least one storage device (either local or network accessible) where segments are pre-stored—the same arrangement as described in the '138 Patent." *Id.* (citing Ex. 1001, Fig. 1). According to Petitioner, "Ogdon discloses that the webservers access at least one storage device to retrieve segments in response to client requests, and Petitioner's mapping to the 'at least one storage device' included both local storage devices at each of Ogdon's webservers as well as a central network accessible storage device." *Id.* at 9–10 (citing Pet. 21; Ex. 1004, 9:30–31, claim 21).

Yet the Petition never discusses how Ogdon's webservers 96 may include a "necessary hard disk or cache" as a "storage device" subcomponent. Indeed, Petitioner's argument that Ogdon's webservers store video "to a local or network accessible storage device" such as a "hard disk or cache" (Req. Reh'g 9) appears for the first time in the request for rehearing. As such, we could not have misapprehended or overlooked such a mapping. Nor does the Petition delineate how such a storage subcomponent might be located locally, centrally, or on a network as part of the interplay of the limitations in claim 1 and claims 6 or 8. For example, the Petition did not address how any particular webserver 96 in Ogdon might retrieve a streamlet from the alleged "necessary hard disk or cache" located at any other (or perhaps even the same) webserver 96. Accordingly, as mentioned in the Decision, the Petition lacks a coherent explanation of Petitioner's intended mapping. *See* Dec. 60. We decline to

entertain Petitioner's *ex post* rationales that are presented for the first time in the request for rehearing.

Second, Petitioner argues that we erred in adopting a claim construction limited to the proxy cache server embodiment of the '138 patent whereby "the claimed 'web servers' do not retrieve streamlets from their own storage devices but instead act as an intermediary, i.e., a proxy, that requests streamlets from a central storage device." Req. Reh'g 2 (citing PO Resp. 45–46; Ex. 1001, 7:3–6). Petitioner argues that this is merely an alternative embodiment. *Id.* at 2–3. Petitioner instead urges us to construe claims 6 and 8 such that "each of the 'first' or 'plurality' of web server(s) [is] configured to retrieve streamlets from ***at least one*** storage device, regardless of whether it is the webserver's own storage device or remote from the respective webserver." *Id.* at 3.

We are not persuaded by Petitioner's arguments because our disposition of these claims was not based on any particular claim construction. Rather, our analysis was based on Petitioner failing to carry its burden of proof regardless of whether the claims are limited to the proxy server embodiment. Specifically, we found that Petitioner failed to explain how its claim mapping to Ogdon could be interpreted in a coherent way consistent with Ogdon's teachings. *See* Dec. 60. Thus, we need not, and did not, construe claims 6 and 8 relative to any particular embodiment. *See, e.g.*, *Realtime Data, LLC v. Iancu*, 912 F.3d 1368, 1375 (Fed. Cir. 2019) ("The Board is required to construe 'only those terms . . . that are in controversy, and only to the extent necessary to resolve the controversy.'" (quoting *Vivid Techs., Inc. v. Am. Sci. & Eng'g, Inc.*, 200 F.3d 795, 803 (Fed. Cir. 1999))).

III. CONCLUSION

For the reasons above, we conclude that Petitioner has not met its burden of showing that we misapprehended or overlooked any of Petitioner's arguments.

IV. ORDER

Accordingly, it is

ORDERED that Petitioner's Request for Rehearing is *denied*.

FOR PETITIONER:

Frank Gasparo
William Hector
Philip Sheng
Ian Paquette
VENABLE LLP
fmgasparo@venable.com
wahector@venable.com
ptsheng@venable.com
igpaquette@venable.com

Inge Osman
Tara Elliott
Richard Frenkel
Rebecca Rabenstein
Steven Peters
LATHAM & WATKINS LLP
inge.osman@lw.com
tara.elliott@lw.com
rick.frenkel@lw.com
rebecca.rabenstein@lw.com
steven.peters@lw.com

FOR PATENT OWNER:

Eliot Williams
George Guy
Ali Dhanani
Thomas Carter
BAKER BOTTS L.L.P.
eliot.williams@bakerbotts.com
hop.guy@bakerbotts.com
ali.dhanani@bakerbotts.com
thomas.carter@bakerbotts.com