Trials@uspto.gov
571-272-7822

Paper 8
Date: April 16, 2024

UNITED STATES PATENT AND TRADEMARK OFFICE

BEFORE THE PATENT TRIAL AND APPEAL BOARD

AYLO FREESITES LTD,
Petitioner,

v.

DISH TECHNOLOGIES L.L.C.,
Patent Owner.

IPR2024-00045
Patent 10,469,554 B2

Before THU A. DANG, JOHN A. HUDALLA, and
JULIET MITCHELL DIRBA, *Administrative Patent Judges*.

HUDALLA, *Administrative Patent Judge*.

DECISION
Granting Institution of *Inter Partes* Review
35 U.S.C. § 314

Aylo Freesites Ltd ("Petitioner") filed a Petition (Paper 1, "Pet.") requesting an *inter partes* review of claims 1–5, 7, 8, 10–14, 16–20, 22–28, and 30 ("the challenged claims") of U.S. Patent No. 10,469,554 B2 (Ex. 1001, "the '554 patent"). Petitioner filed a Declaration of Henry Houh, Ph.D. (Ex. 1003) with its Petition. DISH Technologies L.L.C. ("Patent Owner") filed a Preliminary Response (Paper 6, "Prelim. Resp."), along with a Declaration of Dr. Kevin Jeffay (Ex. 2001).

We have authority to determine whether to institute an *inter partes* review. *See* 35 U.S.C. § 314 (2018); 37 C.F.R. § 42.4(a) (2023). Under 35 U.S.C. § 314(a), we may not authorize an *inter partes* review unless the information in the petition and the preliminary response "shows that there is a reasonable likelihood that the petitioner would prevail with respect to at least 1 of the claims challenged in the petition." For the reasons that follow, we institute an *inter partes* review as to claims 1–5, 7, 8, 10–14, 16–20, 22–28, and 30 of the '554 patent on all grounds of unpatentability presented.

I. BACKGROUND

A. Real Parties-in-Interest

Petitioner identifies Aylo Freesites Ltd (f/k/a MG Freesites Ltd), Aylo Premium Ltd (f/k/a MG Premium Ltd), and Aylo Billing Limited (f/k/a MG Billing Limited) as the real parties-in-interest. Pet. 1. Patent Owner identifies DISH Technologies L.L.C. and Sling TV L.L.C., as well as EchoStar Corporation, as the real parties-in-interest. Paper 4, 2; Paper 7, 2 (Patent Owner's Updated Mandatory Notices).

B. Related Matters

As required by 37 C.F.R. § 42.8(b)(2), the parties identify various related matters. Pet. 1–2; Paper 4, 2–4; Paper 7, 2–3.

In particular, both parties state that the ’554 patent was involved in an investigation of the International Trade Commission (ITC) under 19 U.S.C. § 1337 styled *In the Matter of Certain Fitness Devices, Streaming Components Thereof, and Systems Containing Same*, Inv. No. 337-TA-1265 (ITC instituted May 13, 2021) (“the ITC Investigation”). Pet. 2; Paper 4, 3. Petitioner also states that iFIT, Inc. and Patent Owner were involved in the ITC Investigation. Pet. 10.

C. The ’554 Patent

The ’554 patent is directed to “adaptive-rate shifting of streaming content” over packet-switched networks such as the Internet. Ex. 1001, 1:31–34. The ’554 patent addresses a purported need to “utilize multiple connections between a source and destination, requesting varying bitrate streams depending upon network conditions.” *Id.* at 2:64–67.

Figure 1 of the ’554 patent is reproduced below.

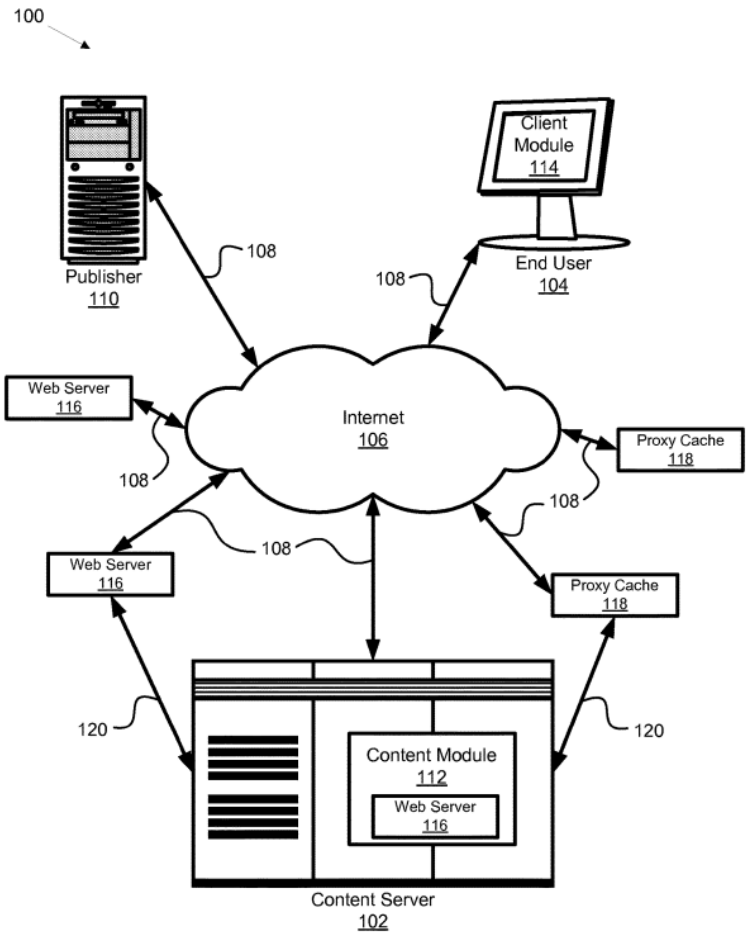

FIG. 1

Figure 1 depicts "system 100 for dynamic rate shifting of streaming content." Ex. 1001, 6:33–35. System 100 includes content server 102, end user station 104, publisher 110, and web server 116. *Id.* at 6:36–52. Content may be transferred over Internet 106 to content server 102, and content from content server 102 may be replicated to other web servers 116. *Id.* at 6:56–58, 7:1–2.

Figure 2b of the '554 patent is reproduced below.

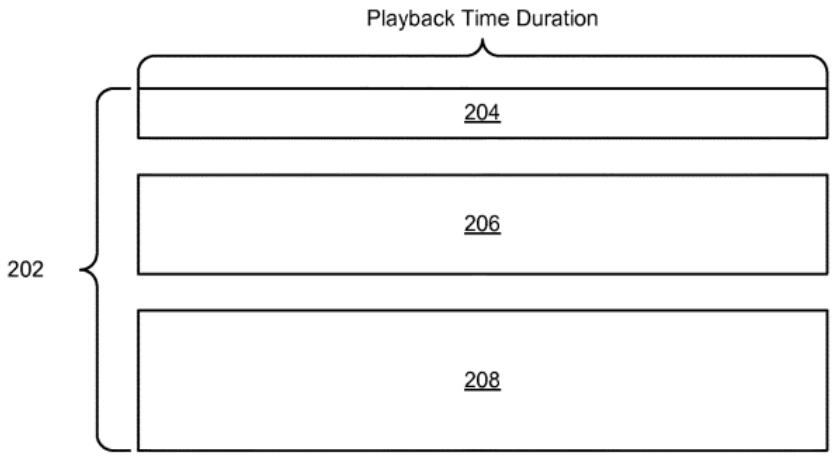

FIG. 2b

Figure 2b depicts "a plurality of streams 202 having varying degrees of quality and bandwidth." Ex. 1001, 7:25–27. Streams 202 comprise low quality stream 204, medium quality stream 206 and high quality stream 208, and each of streams 204, 206, 208 is a copy of content file 200 encoded and compressed to varying bit rates. *Id.* at 7:27–31.

Figure 3a of the '554 patent is reproduced below.

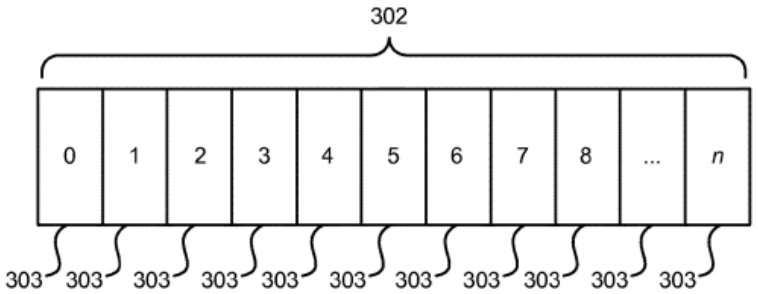

FIG. 3a

Figure 3a depicts "stream 302 divided into a plurality of source streamlets 303," which are "any sized portion[s] of the content file 200." Ex. 1001, 7:37–39.

Figure 3b of the '554 patent is reproduced below.

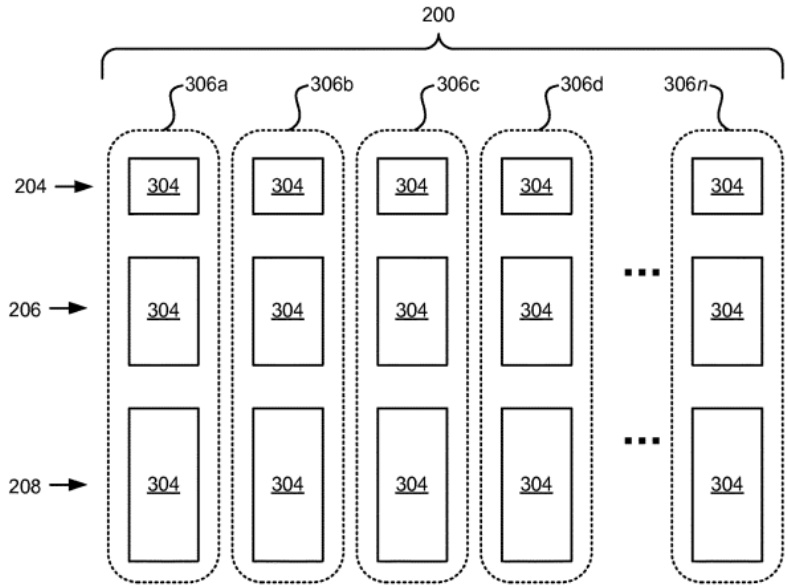

FIG. 3b

Figure 3b depicts "sets 306 of streamlets." Ex. 1001, 7:55–56. A "set" is a "group of streamlets having identical time indices and durations but varying bitrates." *Id.* at 7:57–59. For example, "set 306a includes encoded streamlets 304 having low, medium, and high 204, 206, 208 bitrates." *Id.* at 7:61–62.

The application that led to the '554 patent was filed on January 18, 2019, and claims priority to, *inter alia*, a provisional application that was filed on April 30, 2004. Ex. 1001, codes (22), (60). Petitioner assumes a priority date of April 30, 2004, for purposes of this proceeding (Pet. 9), so we apply that date for determining whether the asserted references qualify as prior art.

D. Illustrative Claim

Of the challenged claims, claims 1, 16, 26, and 30 are independent. Claims 2–5, 7, 8, and 10–14 depend directly or indirectly from claim 1,

claims 17–20 and 22–25 depend directly or indirectly from claim 16, and claims 27 and 28 depend directly or indirectly from claim 26. Claim 1 is illustrative of the challenged claims and recites:

> 1. A system for adaptive-rate content streaming of live event video playable on one or more end user stations over the Internet, the system comprising:
>
> at least one storage device storing live event video, the live event video encoded at a plurality of different bitrates creating a plurality of streams including a low quality stream, a medium quality stream, and a high quality stream, the low quality stream, the medium quality stream, and the high quality stream each comprising a group of streamlets encoded at a respective one of the plurality of different bitrates, each group of streamlets comprising at least first and second streamlets, each of the streamlets corresponding to a portion of the live event video;
>
> wherein at least one of the low quality stream, the medium quality stream, and the high quality stream is encoded at a bitrate of no less than 600 kbps; and
>
> wherein the first streamlet of each of the groups of streamlets has the same first duration and encodes the same first portion of the live event video in each of the low quality stream, the medium quality stream, and the high quality stream, and wherein the first streamlet of the low quality stream encodes the same first portion of the live event video at a different bitrate than the first streamlet of the high quality stream and the first streamlet of the medium quality stream.

Ex. 1001, 18:24–49.

E. Prior Art

Petitioner relies on the following prior art:

> U.S. Patent No. 6,161,137, filed Mar. 31, 1998, issued Dec. 12, 2000 (Ex. 1004, "Ogdon");

International Patent Publication No. WO 02/075482 A2, filed Mar. 15, 2002, published Sept. 26, 2002 (Ex. 1005, "Allen"); and

Synchronized Multimedia Integration Language (SMIL 2.0), published Aug. 7, 2001 (Ex. 1006, "SMIL 2.0").

F. The Asserted Grounds

Petitioner challenges claims 1–5, 7, 8, 10–14, 16–20, 22–28, and 30 of the '554 patent based on the following grounds (Pet. 3–4):

Claims Challenged	35 U.S.C. §	References
1–5, 7, 8, 10–14, 16–20, 22–28, 30	103(a)[1]	Ogdon, Allen
1–5, 7, 8, 10–14, 16–20, 22–28, 30	103(a)	Ogdon, Allen, SMIL 2.0

II. ANALYSIS

We now consider Petitioner's asserted grounds and Patent Owner's arguments to determine whether Petitioner has met the "reasonable likelihood" standard for institution under 35 U.S.C. § 314(a).

A. Legal Standards

A claim is unpatentable under 35 U.S.C. § 103(a) if the differences between the claimed subject matter and the prior art are such that the subject

[1] The Leahy-Smith America Invents Act ("AIA"), Pub. L. No. 112-29, 125 Stat. 284, 287–88 (2011), amended 35 U.S.C. §§ 102 and 103. Because the '554 patent claims priority to an application filed before March 16, 2013 (the effective date of the relevant amendments), we assume that the pre-AIA versions of §§ 102 and 103 apply. However, our decision would be the same under the current version of the statutes.

matter, as a whole, would have been obvious at the time the invention was made to a person having ordinary skill in the art to which said subject matter pertains. *See KSR Int'l Co. v. Teleflex Inc.*, 550 U.S. 398, 406 (2007). The question of obviousness is resolved on the basis of underlying factual determinations, including (1) the scope and content of the prior art; (2) any differences between the claimed subject matter and the prior art; (3) the level of skill in the art; and (4) where in evidence, so-called secondary considerations. *See Graham v. John Deere Co.*, 383 U.S. 1, 17–18 (1966). We also recognize that prior art references must be "considered together with the knowledge of one of ordinary skill in the pertinent art." *In re Paulsen*, 30 F.3d 1475, 1480 (Fed. Cir. 1994) (citing *In re Samour*, 571 F.2d 559, 562 (CCPA 1978)).

B. Level of Ordinary Skill in the Art

Citing testimony from Dr. Houh, Petitioner contends a person of ordinary skill in the art "would have had at least a B.S. degree in computer science or electrical engineering (or comparable degree) and two years of experience in networking or streaming media, or a M.S. in computer science or electrical engineering (or comparable degree)." Pet. 9–10 (citing Ex. 1003 ¶ 45). Patent Owner "disputes Petitioner's definition," but does not explain what it disputes. Prelim. Resp. 2. Notwithstanding, Patent Owner asserts that "resolution of such dispute is not necessary for the Board to make a determination regarding institution." *Id.*

For purposes of this Decision, we adopt Petitioner's definition of the level of ordinary skill in the art. On the present record, we are satisfied that

this definition of the level of skill is consistent with the teachings of the ’554 patent and the asserted prior art.

C. Claim Interpretation

In an *inter partes* review, we construe each claim

> using the same claim construction standard that would be used to construe the claim in a civil action under 35 U.S.C. [§] 282(b), including construing the claim in accordance with the ordinary and customary meaning of such claim as understood by one of ordinary skill in the art and the prosecution history pertaining to the patent.

37 C.F.R. § 42.100(b). Accordingly, our claim construction standard is the same as that of a district court. *See id.* Under the standard applied by district courts, claim terms are generally given their plain and ordinary meaning, as would have been understood by a person of ordinary skill in the art at the time of the invention and in the context of the entire patent disclosure. *Phillips v. AWH Corp.*, 415 F.3d 1303, 1313 (Fed. Cir. 2005) (en banc). “There are only two exceptions to this general rule: 1) when a patentee sets out a definition and acts as his own lexicographer, or 2) when the patentee disavows the full scope of a claim term either in the specification or during prosecution.” *Thorner v. Sony Comput. Entm’t Am. LLC*, 669 F.3d 1362, 1365 (Fed. Cir. 2012).

Although Petitioner states that “most terms require no construction,” Petitioner proposes that the term “‘virtual timeline’ should be construed as ‘a playlist of entire content files.’” Pet. 10–11 (citing Ex. 1003 ¶¶ 43–46). Petitioner also references certain of Patent Owner’s claim construction positions from the ITC Investigation and various constructions made by the

Administrative Law Judge (ALJ) in the ITC Investigation. *Id.* at 10–12. Patent Owner does not propose any terms for construction. Prelim. Resp. 2.

For purposes of this Decision, we determine that no aspects of the challenged claims require explicit construction. *See, e.g.*, *Realtime Data, LLC v. Iancu*, 912 F.3d 1368, 1375 (Fed. Cir. 2019) ("The Board is required to construe 'only those terms . . . that are in controversy, and only to the extent necessary to resolve the controversy.'" (quoting *Vivid Techs., Inc. v. Am. Sci. & Eng'g, Inc.*, 200 F.3d 795, 803 (Fed. Cir. 1999))).

D. Obviousness Ground Based on Ogdon and Allen

Petitioner contends the subject matter of claims 1–5, 7, 8, 10–14, 16–20, 22–28, and 30 would have been obvious over Ogdon and Allen. Pet. 17–54. Patent Owner disputes Petitioner's contentions. Prelim. Resp. 3–29.

1. Ogdon

Ogdon is a U.S. patent directed to "a presentation system wherein network transmission characteristics are utilized in determining the presentation materials presented at each client node during a performance of the presentation." Ex. 1004, 1:12–15. Ogdon contemplates that video and audio portions of the presentation may be provided over the Internet. *Id.* at 2:8–10.

Figures 1A and 1B of Ogdon are reproduced below.

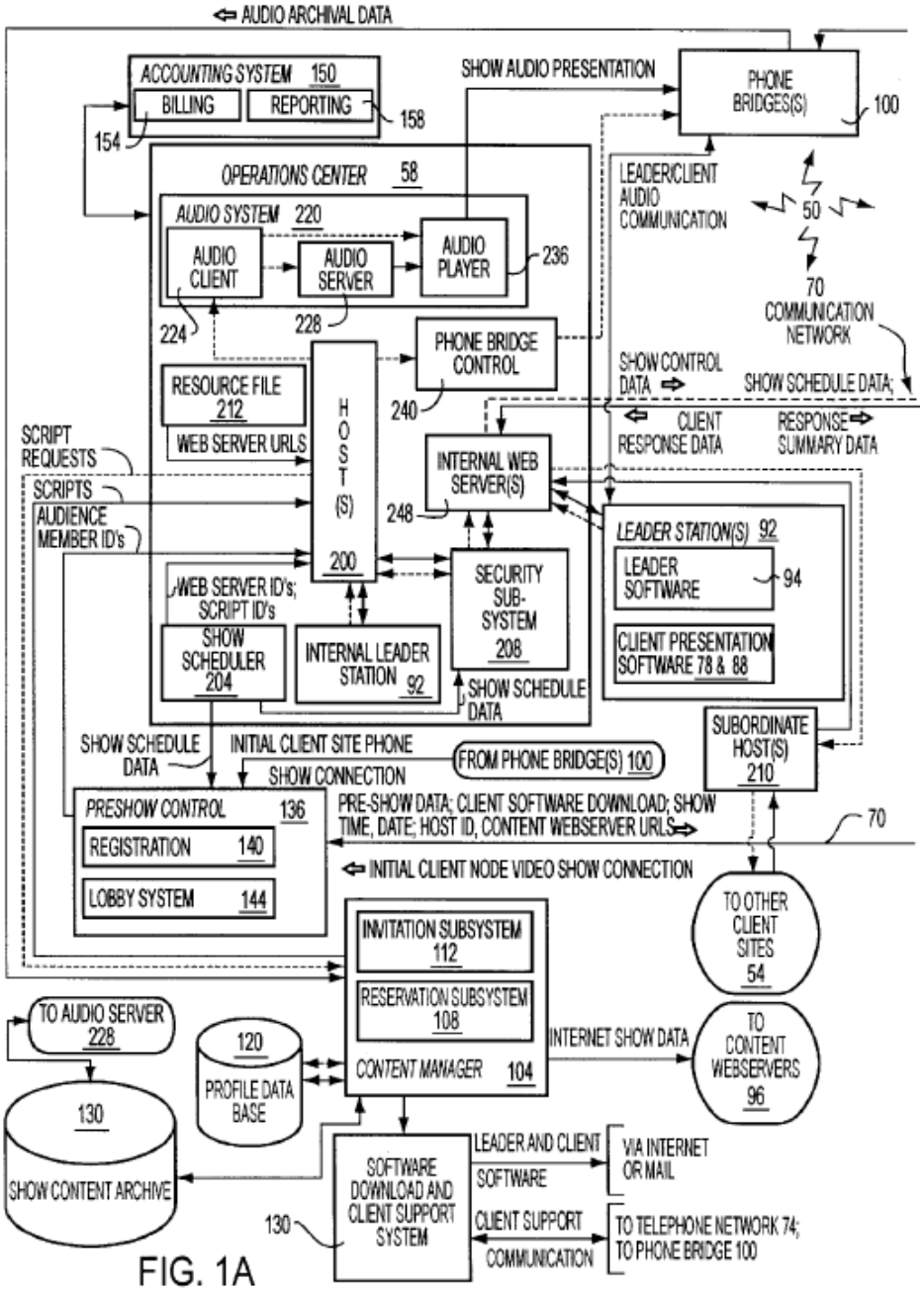
AUDIO ARCHIVAL DATA
ACCOUNTING SYSTEM 150
BILLING
REPORTING
158
154
SHOW AUDIO PRESENTATION
PHONE BRIDGES(S)
100
OPERATIONS CENTER 58
AUDIO SYSTEM 220
AUDIO CLIENT
AUDIO SERVER
AUDIO PLAYER
236
224
228
LEADER/CLIENT AUDIO COMMUNICATION
50
70 COMMUNICATION NETWORK
PHONE BRIDGE CONTROL
240
SHOW CONTROL DATA
SHOW SCHEDULE DATA;
RESOURCE FILE 212
WEB SERVER URLS
HOST(S) 200
CLIENT RESPONSE DATA
RESPONSE SUMMARY DATA
SCRIPT REQUESTS
SCRIPTS
AUDIENCE MEMBER ID's
INTERNAL WEB SERVER(S)
248
LEADER STATION(S) 92
LEADER SOFTWARE
94
WEB SERVER ID's; SCRIPT ID's
SECURITY SUB-SYSTEM 208
CLIENT PRESENTATION SOFTWARE 78 & 88
SHOW SCHEDULER 204
INTERNAL LEADER STATION 92
SHOW SCHEDULE DATA
SUBORDINATE HOST(S) 210
SHOW SCHEDULE DATA
INITIAL CLIENT SITE PHONE
FROM PHONE BRIDGE(S) 100
SHOW CONNECTION
PRESHOW CONTROL 136
PRE-SHOW DATA; CLIENT SOFTWARE DOWNLOAD; SHOW TIME, DATE; HOST ID, CONTENT WEBSERVER URLS
70
REGISTRATION 140
LOBBY SYSTEM 144
INITIAL CLIENT NODE VIDEO SHOW CONNECTION
TO OTHER CLIENT SITES 54
INVITATION SUBSYSTEM 112
RESERVATION SUBSYSTEM 108
TO AUDIO SERVER 228
120
PROFILE DATA BASE
CONTENT MANAGER 104
INTERNET SHOW DATA
TO CONTENT WEBSERVERS 96
130
SHOW CONTENT ARCHIVE
SOFTWARE DOWNLOAD AND CLIENT SUPPORT SYSTEM
LEADER AND CLIENT SOFTWARE
VIA INTERNET OR MAIL
130
CLIENT SUPPORT COMMUNICATION
TO TELEPHONE NETWORK 74; TO PHONE BRIDGE 100
FIG. 1A

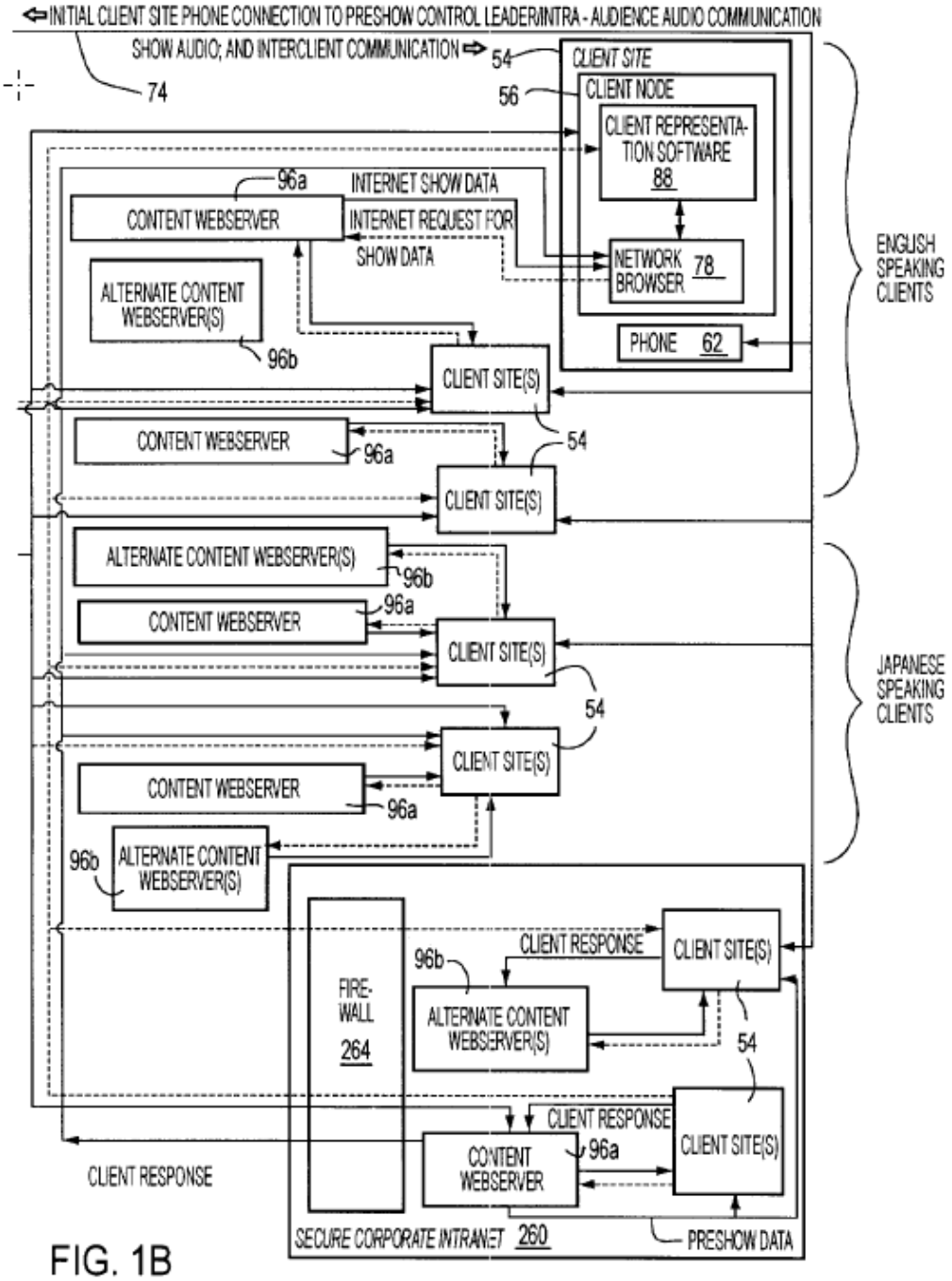

FIG. 1B

Together, Figures 1A and 1B illustrate presentation system 50 with solid arrows denoting presentation data flows and dashed arrows denoting control data flows. Ex. 1004, 7:34–37. Audience members receive a presentation at client sites 54. *Id.* at 7:40–41. Each client site 54 may have client node 56 (e.g., a personal computer) and telephone 62. *Id.* at 7:44–45. Client node 56

may receive video and audio information from communications network 70 (e.g., the Internet), and phone 62 may receive audio routed separately through voice grade telephony networks 74. *Id.* at 7:46–51.

Content manager system 104 manages presentation scripts and data, and logs and confirms the locations and addresses of content webservers 96 where the content for each presentation will reside. Ex. 1004, 9:27–31. Content manager 104 also distributes presentation content (e.g., presentation segments) to content webservers 96. *Id.* at 9:31–32, 9:44–46.

Different versions of the same presentation may be accessible from the content webservers, and each version may be tailored to a different group of audience members (e.g., Japanese-speaking audience members, or audience members affiliated with a particular organization). Ex. 1004, 2:30–35. Each presentation version may include one or more presentation segments that provide different portions of the presentation. *Id.* at 2:36–39. "[S]ubcollections each having one or more segments are provided as presentation 'elements' in that each such subcollection is intended to be an indivisible portion of a presentation performance." *Id.* at 2:39–42. Each presentation version typically includes a subcollection of segments (i.e., presentation elements) ordered according to their presentation sequence. *Id.* at 2:43–45. "[S]ubstantially every segment (or subcollections thereof) in one version corresponds with a segment (or subcollections thereof) having the same presentation order, in each of the other versions." *Id.* at 2:45–50. Such corresponding segments (or subcollections) in different versions may have approximately the same presentation duration, and one segment (or subcollection) may be presented as a replacement for another such corresponding segment (or subcollection) during the presentation. *Id.*

at 2:49–55. Corresponding alternative segments (or subcollections) also can be substituted for one another depending on the performance of the communications network. *Id.* at 2:55–61.

Petitioner notes that Ogdon issued on December 12, 2000, and contends that Ogdon qualifies as prior art under 35 U.S.C. § 102(b). Pet. 13. Patent Owner argues that Ogdon is not analogous art. Prelim. Resp. 7–9. According to Patent Owner, "the '554 Patent is in the field of 'video streaming' a single video to users over changing network conditions . . . , whereas Ogdon is in the field of presenting presentation materials to clients wherein the content itself varies based on bandwidth." *Id.* at 8 (citing Ex. 1001, 1:31–34; Ex. 1004, 1:9–15). Patent Owner does not dispute that Ogdon would qualify as prior art based on its issue date if it is deemed analogous.

"Two separate tests define the scope of analogous prior art: (1) whether the art is from the same field of endeavor, regardless of the problem addressed and, (2) if the reference is not within the field of the inventor's endeavor, whether the reference still is reasonably pertinent to the particular problem with which the inventor is involved." *In re Bigio*, 381 F.3d 1320, 1325 (Fed. Cir. 2004). Our inquiry begins and ends with the first test pertaining to the field of the endeavor.

Patent Owner is correct that the '554 patent is in the field of video streaming over the internet with shifting of streaming content based on network conditions. *See* Ex. 1001, 1:31–34. Similarly, Ogdon discloses shifting presentation content that is transmitted over the internet based on network conditions. *See, e.g.*, Ex. 1004, 1:9–15. The only potential discrepancy appears to be whether Ogdon's disclosed presentation content

can include streaming video. And Ogdon discloses an example where a presentation version may include "real time or animated video." *Id.* at 2:61–66; *see also infra* § II.D.3.a (discussing Ogdon's disclosure of video presentations). We find that Ogdon's disclosure of transmitting real-time video as part of a presentation is the same as video streaming. Thus, we conclude that Ogdon is analogous art because it is in the same field of endeavor as the '554 patent.

For purposes of this Decision, we determine that Ogdon qualifies as prior art under 35 U.S.C. § 102(b) because Ogdon's issue date of December 12, 2000, is more than one year before the earliest effective filing date of the challenged claims, which is April 30, 2004. Ex. 1001, code (60); Ex. 1004, code (45).

2. Allen

Allen is an international patent application publication directed to "techniques for the high-performance digital processing of video signals for use with a variety of streaming media encoders" that "allow content producers to produce streaming media in a flexible and scalable manner." Ex. 1005, 1:14–19. In particular, content producers may "supply the streaming media to multiple simultaneous users through a local facility, in a manner that tailors the delivery stream to the capabilities of the user's system." *Id.* at 1:18–21. In one disclosed example, a content producer produces, pre-processes, and encodes content "in RealSystem, Microsoft Windows Media, and Apple QuickTime formats, and . . . each format is encoded in three different bit rates, 56Kbps, 300Kbps, and 600Kbps." *Id.* at 12:1–5.

Petitioner notes that Allen issued on September 26, 2002, and contends that Allen qualifies as prior art under 35 U.S.C. § 102(b). Pet. 14. Patent Owner does not contest the prior art status of Allen at this juncture. For purposes of this Decision, we determine that Allen qualifies as prior art under 35 U.S.C. § 102(b) because Allen's issue date of September 26, 2002, is more than one year before the earliest effective filing date of the challenged claims, which is April 30, 2004. Ex. 1001, code (60); Ex. 1005, code (45).

3. Claim 1

a. Preamble (1[Pre])

The preamble of claim 1 recites "[a] system for adaptive-rate content streaming of live event video playable on one or more end user stations over the Internet." Ex. 1001, 18:24–26. Petitioner cites Ogdon's teaching of a streaming a video presentation from content servers over the internet such that it is playable at various client nodes. Pet. 17–18 (citing Ex. 1003 ¶ 59; Ex. 1004, 3:38–41, 7:40–48, 7:53–63, 8:27–40, 22:10–23). For "adaptive-rate content," Petitioner cites Ogdon's teaching of "dynamically and adaptively switch[ing] between . . . versions of the presentation according to network transmission characteristics at each client network node." *Id.* at 18 (emphasis omitted; first alteration added) (quoting Ex. 1004, 3:38–41). Regarding the "live event video" recitation, Petitioner cites various references in Ogdon to "real-time," "live," or "performed" presentations. *Id.* (citing Ex. 1004, 1:62–2:1, 6:2–5, 10:7, code (57)). According to Petitioner, the patentees also admitted that "that it was known to use streaming 'to

deliver content on demand (previously recorded) or from live broadcasts.'" *Id.* at 12 (quoting Ex. 1001, 1:56–57), 18.

Patent Owner argues that Ogdon does not teach streaming a video, but rather "conveying only meeting presentation materials and ***live audio*** (via a telephone line)." Prelim. Resp. 7 (citing Ex. 2001 ¶ 55). According to Patent Owner, "Ogdon makes clear that video may not be presented to some users ***at all***, and emphasizes the availability of, e.g., fully audio versions to replace the video version in order to accommodate users with lower bandwidths." *Id.* at 8. Patent Owner also argues that "Ogdon criticizes video streaming and teaches replacement solutions that ***do not stream a 'video'***" such as "wholly different types of content (e.g., an audio presentation without video) when network transmission rates are insufficient to convey the original-quality video." *Id.* at 8–9 (citing Ex. 2001 ¶ 63).

Based on the present record, we are persuaded preliminarily that Ogdon teaches the preamble.[2] Specifically, Ogdon teaches the use of video, including real-time streamed video, as part of a presentation that is sent from content webservers to client sites. *See, e.g.*, Ex. 1004, 3:38–41, 7:40–48, 7:53–63, 8:27–40; *see also id.* at 2:30–66 (discussing "real time or animated video" as a presentation version). In addition, Ogdon's various mentions of "real-time," "live," or "performed" presentations teach the "live event" aspect of the preamble. *See, e.g.*, *id.* at 1:62–2:1, 2:30–66, 6:2–5, 10:7, code (57). Patent Owner's arguments about Ogdon's other versions or types of presentations (Prelim. Resp. 7–9) do not undermine Ogdon's teaching of

[2] Because Petitioner shows sufficiently for purposes of institution that Ogdon teaches the subject matter of the preamble, we need not determine whether the preamble is limiting. *See Realtime Data*, 912 F.3d at 1375.

video presentations. Ogdon also teaches that the rate of content streaming is adaptive insofar as Ogdon's system switches between presentation versions based on network transmission characteristics. *See, e.g.*, Ex. 1004, 3:38–41.

b. Limitation 1[A]

Claim 1 further recites "at least one storage device storing live event video." Ex. 1001, 18:27. Petitioner cites Ogdon's webservers 96, which store presentation segments, for teaching the recited "storage device." Pet. 18–19 (citing Ex. 1003 ¶ 60; Ex. 1004, 9:30–31, 9:44–46, 10:7–13, Fig. 2C, claim 21). Patent Owner does not dispute Petitioner's analysis. At this juncture, we find Petitioner's analysis of this limitation to be sufficient for institution.

c. Limitation 1[B] and Rationale for the Combination

Claim 1 further recites "the live event video encoded at a plurality of different bitrates creating a plurality of streams including a low quality stream, a medium quality stream, and a high quality stream." Ex. 1001, 18:27–31. Petitioner cites Ogdon's teaching of "'[d]ifferent versions of the same presentation' with 'different network [transmission] requirements' such as 'a first version' requiring 'a network transmission rate sufficient for real time or animated video' and 'another version' requiring 'a transmission rate sufficient for graphic slides.'" Pet. 19–20 (second alteration added to reflect actual quotation) (quoting Ex. 1004, 2:30–66) (citing Ex. 1003 ¶¶ 61–62; Ex. 1004, 2:8–10, 13:47–49, 22:44–47, 24:55). Thus, according to Petitioner, "Ogdon discloses that the live event video (video presentation) is

encoded at a plurality of different bitrates (different versions or quality levels) creating a plurality of streams." *Id.*

Petitioner additionally cites Allen's teaching of "encod[ing] video content into at least three different quality levels (or bitrates) for streaming in order to allow streaming to various clients with different network requirements including, for example, at 56 kbps, at 300 kbps, and at 600 kbps." Pet. 20 (citing Ex. 1005, 12:1–5). In particular, Petitioner maps the recited low, medium, and high quality streams to Allen's 56 kbps, 300 kbps, and 600 kbps bitrate streams, respectively. *Id.* at 20 (citing Ex. 1003 ¶ 63). Petitioner contends that an ordinarily skilled artisan

> would have been motivated to encode the video presentation of Ogdon, including each sequential segment of the video, into each of a low quality, medium quality, and high quality level bitrate stream, as taught by Allen, because providing three different quality levels (low at 56 kbps, medium at 300 kbps, and high at 600 kbps) would enable user client nodes with a wide variety of network bandwidth requirements to stream the video presentation—a stated goal of Ogdon.

Pet. 20–21 (citing Ex. 1003 ¶ 64; Ex. 1004, code (57)). Petitioner also contends an ordinarily skilled artisan reasonably would have expected success in making the combination because "both Ogdon and Allen are drawn to similar systems of client-server based streaming and because simply encoding another copy at an additional quality level would have been a simple and straightforward modification." *Id.* at 21 (citing Ex. 1003 ¶ 64).

Patent Owner argues that Ogdon teaches different presentation variations, e.g., in different languages or directed to different audiences, so Ogdon "refer[s] to altogether **different** content, customized based on language preferences of the audience or organization affiliation, not even hinting at a variation based on streaming quality." Prelim. Resp. 16–17

(Ex. 1004, 2:30–35, 25:38–42; Ex. 2001 ¶ 67). Thus, Patent Owner argues that Ogdon's "[c]ustomized versions of presentation materials do not disclose or suggest the claimed '***plurality of streams***' . . . at least because the underlying content– not simply the content's quality – in each presentation is different, rather than being a copy of the live event video." *Id.* at 17 (citing Ex. 2001 ¶ 67); *see also id.* at 18–22 (similar argument). Patent Owner also disputes that Ogdon teaches encoding even its customized versions of a presentation at different bitrates. *Id.* at 17–18.

Based on the present record, we are persuaded that Petitioner has a reasonable likelihood of prevailing in showing that an ordinarily skilled artisan would have been motivated to combine Ogdon and Allen to yield this limitation. Ogdon teaches different quality versions of a presentation that may include video (*see, e.g.*, Ex. 1004, 2:8–10, 2:30–66, 13:47–49, 22:44–47, 24:55), and Allen expressly teaches encoding the same content at bitrates of 56 kbps, 300 kbps, and 600 kbps (*see, e.g.*, Ex. 1005, 12:1–5). Based on these teachings, Petitioner shows sufficiently, on this record, that it would have been obvious to encode streaming video into low, medium, and high quality streams. *See, e.g.*, Ex. 1003 ¶¶ 62–64.

We also are sufficiently persuaded on this record that an ordinarily skilled artisan would have combined Allen with Ogdon to enable streaming video presentations for a variety of different available bandwidths. *See, e.g.*, Ex. 1003 ¶ 64; Ex. 1004, code (57). In particular, Ogdon's teaching of retrieving alternatively sized presentations based on transmission data rates supports Petitioner's proposed combination with Allen's teaching of encoding video at different bitrates. *See* Ex. 1004, code (57) (stating that a greater-sized presentation for a "higher transmission rate" has

"corresponding enhanced quality of presentation" compared to a reduced-sized version for a "low transmission data rate"), 22:44–47 (stating that "as the expected amount of time for retrieving one or more presentation elements lengthens, . . . better presentation quality presentation elements may be retrieved (e.g., the presentation quality may be enhanced from limited or no animation to full animation)"). And Petitioner establishes sufficiently that an ordinarily skilled artisan reasonably would have expected success in making the combination, particularly given that Ogdon already contemplates alternative presentations for different transmission rates. *See, e.g.*, Ex. 1003 ¶¶ 62, 64; Ex. 1004, code (57).

Patent Owner's arguments are directed to Ogdon alone and do not account for Petitioner's proposed modification based on Allen.[3] Such arguments do not show nonobviousness where Petitioner's obviousness ground is based on a combination of references. *See In re Keller*, 642 F.2d 413, 426 (CCPA 1981). Furthermore, to the extent Patent Owner argues that an ordinarily skilled artisan would not have been motivated to modify Ogdon as proposed, it fails to sufficiently explain this contention. For example, we do not read Ogdon to indicate that its presentation versions *must be* wholly different types of presentation materials, i.e., presentations in different languages or presentations tailored for different audiences. We also do not agree with Patent Owner (Prelim. Resp. 20–22) that Ogdon fails to teach or suggest video streaming for the same reasons discussed above.

---

[3] Patent Owner additionally puts forth a generalized argument against Petitioner's proposed combination of Ogdon and Allen. *See* Prelim. Resp. 28–29. As discussed below, we find Patent Owner's argument unavailing because it also is based on alleged deficiencies in the teachings of Ogdon alone. *See infra* § II.D.3.g.

See supra §§ II.D.1, II.D.3.a. Thus, based on the present record, Patent Owner's arguments regarding this limitation are unavailing.

d. Limitation 1[C]

Claim 1 further recites

> the low quality stream, the medium quality stream, and the high quality stream each comprising a group of streamlets encoded at a respective one of the plurality of different bitrates, each group of streamlets comprising at least first and second streamlets, each of the streamlets corresponding to a portion of the live event video.

Ex. 1001, 18:31–38. Petitioner maps the recited "streamlets" to Ogdon's segments, and Petitioner contends that the recited "group of streamlets" comprises elements, collections, or subcollections of such segments. Pet. 21–22 (citing Ex. 1003 ¶ 65; Ex. 1004, 2:43–55). For the recited groups comprising "at least first and second streamlets," Petitioner cites Ogdon's teaching that each subcollection of segments is ordered according to a presentation sequence. *Id.* at 22 (citing Ex. 1003 ¶ 66; Ex. 1004, 2:44–45, 3:46–47, Fig. 2C (step 508)). Petitioner references the same teachings from Allen discussed above regarding the low, medium, and high quality levels. *Id.* Petitioner contends that an ordinarily skilled artisan "would have been motivated to encode each recorded video segment of Ogdon into each quality level in parallel in real-time prior to storing at the webservers," which Petitioner calls "a convenient and practical way to generate different quality levels for each segment in real-time for distribution to client nodes." *Id.* at 22–23 (citing Ex. 1003 ¶ 67; Ex. 1005, 3:16–18, 5:15–21). Petitioner also contends an ordinarily skilled artisan would have expected success in making this modification "because Ogdon teaches corresponding segments

at different quality levels" and an ordinarily skilled artisan "would have known how to encode each raw video segment into a corresponding quality level (bitrate) on a segment-by-segment basis in parallel." *Id.* at 23 (citing Ex. 1003 ¶ 68).

Patent Owner argues that "Ogdon's 'presentation sequence' is a list of presentation elements (i.e., slides) that the human presenter assembles in a 'script' for changing on the fly (i.e., 'in the middle of a presentation')" that does not teach "creating a source video or live video feed with a plurality of streams, each having streamlets or files that yield a different portion of the video on playback." Prelim. Resp. 22–23 (citing Ex. 1004, 3:16–18; Ex. 2001 ¶ 76). Patent Owner also argues again that "Ogdon's 'presentation versions' are not a 'video encoded at a plurality of different bitrates.'" *Id.* at 24 (citing Ex. 1003 ¶ 77). Patent Owner additionally argues that one of Ogdon's alternative segments is a "graphic slide," which does not teach or suggest a video stream at a different bitrate. *Id.* at 25–26 (citing Ex. 2001 ¶¶ 79–80).

We are sufficiently persuaded that, in the proposed combination, Ogdon's presentation segments teach the recited "streamlets," and that a collection or subcollection of presentation segments teaches the recited "group of streamlets." *See, e.g.*, Ex. 1004, 2:43–55. Petitioner also establishes that Ogdon's presentation segments can comprise video (*see, e.g.*, *id.* at Fig. 2C (step 508 describing a "next collection of one or more (video) segments")), and in light of Ogdon's teaching that "each version of a presentation typically has its subcollections of segments (i.e., presentation elements) ordered according to their presentation sequence" (*id.* at 2:43–45), we are sufficiently persuaded that the Ogdon–Allen combination renders

obvious "a first and a second streamlet (segment) corresponding to different portions of the video presentation." Ex. 1003 ¶ 66. Moreover, based on Dr. Houh's testimony, we find Petitioner's showing sufficient on this record that an ordinarily skilled artisan would have been motivated, in view of Allen, to encode Ogdon's video segments at various quality levels in parallel in real-time with a reasonable expectation of success. *See, e.g.*, *id.* ¶¶ 67–68. This testimony is supported by Allen's teaching of a plurality of encoders simultaneously processing video to "provide output in a particular popular format and bit rate." Ex. 1005, 3:16–18.

We do not agree with Patent Owner that Ogdon only discloses ordering of segments by a presentation leader. Prelim. Resp. 22–23 (citing Ex. 1004, 3:16–18). The fact that Ogdon's system optionally allows a presentation leader to reorder or change a presentation does not detract from Ogdon's teaching that segments are ordered "according to their presentation sequence." Ex. 1004, 2:43–49. Thus, based on the present record, we find preliminarily that Ogdon teaches an ordering of presentation segments, i.e., that "each group of streamlets comprises at least first and second streamlets."

e. Limitation 1[D]

Claim 1 further recites "wherein at least one of the low quality stream, the medium quality stream, and the high quality stream is encoded at a bitrate of no less than 600 kbps." Ex. 1001, 18:39–41. Petitioner cites the same analysis discussed above based on Ogdon and Allen for teaching a high quality stream with a bitrate of 600 kbps. Pet. 23 (citing Ex. 1003 ¶ 69). Patent Owner does not dispute Petitioner's analysis for this limitation

apart from its arguments discussed above. At this juncture, we are persuaded preliminarily that the combination of Ogdon and Allen teaches a high quality stream encoded at 600 kbps. *See, e.g.*, Ex. 1003 ¶ 69; Ex. 1005, 12:1–5; *see also supra* § II.D.3.c.

f. Limitation 1[E]

Claim 1 further recites

> wherein the first streamlet of each of the groups of streamlets has the same first duration and encodes the same first portion of the live event video in each of the low quality stream, the medium quality stream, and the high quality stream, and wherein the first streamlet of the low quality stream encodes the same first portion of the live event video at a different bitrate than the first streamlet of the high quality stream and the first streamlet of the medium quality stream.

Ex. 1001, 18:42–50. Petitioner cites Ogdon's teaching that "corresponding segments (or subcollections thereof) in different versions have approximately the same presentation duration" and that "any of the corresponding **alternative segments (or subcollections thereof) from different versions** can be presented as a **replacement** for another such corresponding segment (or subcollection) during the presentation." Pet. 24 (emphasis by Petitioner) (quoting Ex. 1004, 2:49–55). Petitioner contends that an ordinarily skilled artisan would have understood "'approximately the same presentation duration' . . . not to be limited to only durations that are close but not exactly the same, but rather encompassing durations that are either the same, or approximately the same." *Id.* at 25 (citing Ex. 1003 ¶¶ 70–71). And, as discussed above, Petitioner contends that an ordinarily skilled artisan "would have been motivated to encode each segment of Ogdon into each corresponding quality level bitrate in real-time—which

would generate corresponding segments of equal duration." *Id.* at 26 (citing Ex. 1003 ¶ 73).

Patent Owner criticizes Petitioner's analysis of Ogdon's alleged "corresponding segments" insofar as "Ogdon does not disclose [that] each corresponding 'segment' is the same duration, nor does it disclose a way to ensure they are." Prelim. Resp. 23. According to Patent Owner, Ogdon teaches only that the segments are "*approximately* the same presentation duration." *Id.* (citing Ex. 1004, 2:49–55).

Based on the present record, we find preliminarily that Ogdon in view of Allen teaches the "same first duration" limitation of claim 1. In particular, we are persuaded preliminarily that an ordinarily skilled artisan considering Ogdon's teachings of corresponding segments (1) as having approximately the same duration and (2) as being replacements for one another (*see, e.g.*, Ex. 1004, 2:49–55) would have known to make the segments the same duration. *See, e.g.*, Ex. 1003 ¶¶ 70–71. Otherwise, we are sufficiently persuaded by Petitioner's contentions, as discussed above (*see supra* § II.D.1.d), that an ordinarily skilled artisan would have known to encode Ogdon's video segments into corresponding quality level bitrates in real-time. *See, e.g.*, Ex. 1003 ¶¶ 67–68, 73.

g. Patent Owner's Argument Regarding the Rationale for the Combination

Patent Owner argues that an ordinarily skilled artisan would not have been motivated to combine Allen with Ogdon "because nothing in either reference supports Petitioner's attempt to change Ogdon's system from a presentation distribution system to a video streaming system." Prelim.

Resp. 28–29.[4] In conjunction with this argument, Patent Owner references the same arguments discussed above about alleged deficiencies with Ogdon's teachings. *See id*. Patent Owner does not make any arguments specific to the combinability of Ogdon and Allen.

We already have addressed Patent Owner's arguments about alleged deficiencies with Ogdon above. These arguments do not undermine Petitioner's rationale for the combination for the same reasons discussed above.

h. Secondary Considerations of Nonobviousness

Both parties reference certain findings of the ALJ in the ITC Investigation related to secondary considerations of nonobviousness. *See* Pet. 58–60; Prelim. Resp. 38–42. According to Patent Owner, the ALJ found that Patent Owner's evidence had "demonstrated long-felt but unresolved need and failure of others," and that Patent Owner had "adduced evidence demonstrating surprising results," "commercial success," and "praise by others."[5] Prelim. Resp. 40–41 (citing Ex. 1009, 213–17). Patent Owner argues that Petitioner fails to adequately address these findings and, as a result, we should exercise our discretion to deny the Petition. *Id.* at 39–40, 42.

---

[4] Patent Owner cites "EX 2001 at ¶15" in support of this argument. *See* Prelim. Resp. 28–29. Yet paragraph 15 of Dr. Jeffay's declaration pertains to certain of Dr. Jeffay's biographical details. We have considered Dr. Jeffay's testimony that arguably supports Patent Owner's argument (*see, e.g.*, Ex. 2001 ¶¶ 90, 92), and we find that it does not meaningfully affect our analysis.

[5] Patent Owner contends that these findings from the ALJ were "adopted in relevant part by the ITC." Prelim. Resp. 40–42 (citing Ex. 2005, 2).

Petitioner contends that Patent Owner cannot establish a nexus between evidence of secondary considerations and the claim language here. Pet. 58. Although Petitioner acknowledges that the ’554 patent was at issue in the ITC investigation, Petitioner states that Patent Owner’s evidence of a nexus in the ITC investigation hinged on the respondents’ concession that Patent Owner’s “Move Media Player embodied the claimed invention” given the respondents’ argument that “a public use of Move Media Player in 2005 was an invalidating use meeting each and every element of the asserted claims.” *Id.* (citing Ex. 1009, 212–13). Petitioner argues that it has made no such concession here, and that the respondents’ concession in the ITC Investigation should not apply to Petitioner. *Id.* at 59.

Petitioner also argues that the ALJ ascribed the Move Media Player’s success to certain unique characteristics that are not claimed in the ’554 patent. Pet. 58–59. Petitioner also disputes the ALJ’s findings because “the purportedly unique and successful aspects of the Move system that the ALJ relied on to find a nexus were already in existence in the prior art and thus cannot form the basis of any nexus to the claimed invention.” *Id.* at 59. Petitioner cites certain teachings from Ogdon to support this argument. *Id.* at 59–60 (citing Ex. 1001, claim 16; Ex. 1004, 14:46–49, 22:48–63).

Patent Owner disputes Petitioner’s arguments. *See* Prelim. Resp. 41–42. Patent Owner argues that “[n]othing suggests that the ITC relied exclusively, or even at all, on [Patent Owner’s] argument that respondents conceded the nexus point.” *Id.* at 41. Patent Owner also disputes that Petitioner’s citations to Ogdon teach the successful aspects of the Move Media Player because, according to Patent Owner, Ogdon does not disclose video streaming. *Id.* at 41–42 (citing Ex. 1004, 2:61–66).

Based on the present record, we find that the secondary considerations findings from the ITC Investigation do not undermine the sufficiency of Petitioner's obviousness showing at this stage.[6] We note that Patent Owner "bears the burden of production with respect to evidence of secondary considerations of nonobviousness." *ZUP, LLC v. Nash Mfg., Inc.*, 896 F.3d 1365, 1373 (Fed. Cir. 2018). At this stage, Patent Owner merely references the findings of the ITC rather than adducing evidence of objective indica of nonobviousness in the first instance and attempting to establish a nexus to the invention of the '554 patent. Further, Petitioner has adduced at least some evidence that the allegedly unique features of the Move Media Player were known in Ogdon, which tends to undermine the ITC's nexus analysis. *See, e.g.*, Ex. 1004, 14:46–49, 22:48–63. We also disagree with Patent Owner (Prelim. Resp. 41–42) that Ogdon does not disclose streaming video for the same reasons mentioned above. *See supra* §§ II.D.1, II.D.3.a.

For these reasons, we find that the evidence of secondary considerations in the present record does not undermine Petitioner's showing for purposes of institution. We also decline to exercise our discretion to deny institution based on Petitioner's alleged failure to address secondary considerations. Patent Owner will have the opportunity at trial to produce evidence related to secondary considerations of nonobviousness.

---

[6] Patent Owner also argues that Dr. Houh's testimony is unreliable because he failed to consider evidence of secondary considerations from the ITC Investigation. Prelim. Resp. 42–43. We decline to discount Dr. Houh's testimony on this basis. Regardless of whether Dr. Houh addressed secondary considerations, we find his testimony relevant at this stage to our consideration of (1) the scope and content of the prior art; (2) any differences between the claimed subject matter and the prior art; and (3) the level of skill in the art. *See Graham*, 383 U.S. at 17–18.

i. Conclusion Regarding Claim 1

Petitioner has shown sufficiently at this juncture that the combination of Ogdon and Allen teaches all limitations of claim 1. Petitioner also has put forth a sufficient rationale for combining Allen with Ogdon with a reasonable expectation of success. Based on the present record, we determine that Petitioner has established a reasonable likelihood that it would prevail in showing that the subject matter of claim 1 would have been obvious over the combination of Ogdon and Allen.

4. Claim 4

Claim 4 depends from claim 1 and recites, *inter alia*, that web servers

> receive at least one streamlet request over one or more internet connections from the one or more end user stations to retrieve the first streamlet storing a portion of the video, wherein the at least one streamlet request from the one or more end user stations includes a request for a currently selected first streamlet from one of the low quality stream, the medium quality stream, and the high quality stream based upon a determination by the end user station to select a higher or lower bitrate version of the streams.

Ex. 1001, 18:62–19:4. Petitioner cites Ogdon's teaching of content webservers 96 receiving requests for presentation segments. Pet. 29–31 (citing Ex. 1003 ¶ 79; Ex. 1004, 6:41–44, 7:10–13, 7:59–63, 19:54–59, 21:40–45, 22:12–17). Petitioner also cites Ogdon's teaching of client nodes 56 (i.e., the recited "end user stations") selecting stream quality based on their determination that a higher or lower bitrate version is needed. *Id.* at 31 (citing Ex. 1003 ¶ 80; Ex. 1004, 23:41–50, 23:51–24:6, 24:50–55).

Patent Owner disputes Petitioner's analysis based on its contention that, in Ogdon, "client requests are 'controlled' by a 'presentation leader' via

a server or 'host' that 'transmit[s] presentation controlling commands.'" Prelim. Resp. 27–28 (alteration by Patent Owner) (quoting Ex. 1004, 4:30–38[7]) (citing Ex. 1004, 3:16–23; Ex. 2001 ¶ 83). Yet, even if Ogdon does teach some control by a presentation leader, it also teaches that client nodes 56 monitor network transmission times and may determine that an alternative (e.g., smaller) segment collection should be selected. *See, e.g.*, Ex. 1004, 23:41–50, 23:51–24:6, 24:50–55. We find this teaching to be sufficient for institution based on the present record.

We have reviewed the rest of Petitioner's analysis for claim 4. Other than the arguments discussed directly above, Patent Owner relies on the same arguments we have discussed above with respect to claim 1. Based on the present record, Petitioner has established a reasonable likelihood that it would prevail in showing that the subject matter of claim 4 would have been obvious over the combination of Ogdon and Allen.

5. Claims 2, 3, 5, 7, 8, and 10–14

We have reviewed Petitioner's analysis for claims 2, 3, 5, 7, 8, and 10–14, which depend directly or indirectly from claim 1. Pet. 27–29, 33–40. Patent Owner relies on the same arguments we have discussed above with respect to claim 1. Based on the present record, Petitioner has established a reasonable likelihood that it would prevail in showing that the subject matter of claims 2, 3, 5, 7, 8, and 10–14 would have been obvious over the combination of Ogdon and Allen.

[7] Patent Owner mistakenly cites to "Ex. 1004 at 3:30-38," but the context makes clear that Patent Owner intended to cite column 4 of Ogdon.

6. Claim 16

Claim 16 is an independent claim that recites "[a]n end user station to stream a live event video over a network from a server for playback of the video," which comprises "a processor" and "a digital processing apparatus memory device." Ex. 1001, 20:3–7. The recited digital processing apparatus memory device comprises "non-transitory machine-readable instructions that, when executed, cause the processor to" perform steps similar to the recited functionalities of the system of claim 1. *Id.* at 20:8–47.

For the recited processor, Petitioner cites Ogdon's teaching that a client node can be a personal computer. Pet. 40 (citing Ex. 1004, 7:45). Petitioner further cites Ogdon's teachings of software running on a client node and contends that and ordinarily skilled artisan "would have understood that a client node personal computer running software, as disclosed in Ogdon, discloses a digital processing apparatus memory device comprising non-transitory machine-readable instructions." *Id.* at 41–42 (citing Ex. 1003 ¶¶ 102–103; Ex. 1004, 7:45, 7:53–63). The remainder of claim 16 recites process steps similar to the recited functionalities of claim 1. Accordingly, Petitioner's analysis for the rest of claim 16 is somewhat similar to claim 1, though claim 16 also recites process steps related to establishing network connections and sending and receiving streamlets for playback. *See id.* at 42–48.

Patent Owner relies on the same arguments discussed above for claim 1. To the extent claim 16 differs from claim 1, we are persuaded preliminarily by Petitioner's analysis. Based on the present record, Petitioner has established a reasonable likelihood that it would prevail in

showing that the subject matter of claim 16 would have been obvious over the combination of Ogdon and Allen.

7. Claims 17–20 and 22–25

Claims 17–20 and 22–25 depend directly or indirectly from claim 16, and Petitioner relies on the same analysis from claims 2, 3, 5, 8, and 10–13, respectively. Pet. 49–50. Patent Owner relies on the same arguments we have discussed above with respect to claim 1. Having reviewed Petitioner's analysis, and based on the present record, we determine that Petitioner has established a reasonable likelihood that it would prevail in showing that the subject matter of claims 17–20 and 22–25 would have been obvious over the combination of Ogdon and Allen.

8. Claims 26–28

Claim 26 recites "[a] process executable by one or more servers to stream a live event video for playback by one or more end user stations, the process comprising" steps similar to the functionalities recited in claims 1 and 4. Ex. 1001, 21:16–18. Petitioner relies on the same analysis from claims 1 and 4. Pet. 50–52. Claims 27 and 28 depend from claim 26, and Petitioner relies on the same analysis from claims 17 and 3, respectively. *Id.* at 52.

Patent Owner relies on the same arguments we have discussed above with respect to claims 1 and 4. Having reviewed Petitioner's analysis, and based on the present record, we determine that Petitioner has established a reasonable likelihood that it would prevail in showing that the subject matter

of claims 26–28 would have been obvious over the combination of Ogdon and Allen.

9. Claim 30

Claim 30 is an independent claim that recites "[a] process executable by a content player device to stream a live event video over a network from a server for playback of the video by the content player device, the process comprising" steps similar to those recited in claim 16. Ex. 1001, 22:17–55. Petitioner relies on the same analysis from claim 16. Pet. 52–54.

Patent Owner relies on the same arguments we have discussed above with respect to claim 1. Having reviewed Petitioner's analysis, and based on the present record, we determine that Petitioner has established a reasonable likelihood that it would prevail in showing that the subject matter of claim 30 would have been obvious over the combination of Ogdon and Allen.

E. Obviousness Grounds Based on Ogdon, Allen, and SMIL 2.0

Petitioner contends the subject matter of claims 1–5, 7, 8, 10–14, 16–20, 22–28, and 30 would have been obvious over the combination Ogdon, Allen, and SMIL 2.0. Pet. 54–58. Patent Owner disputes Petitioner's contentions. Prelim. Resp. 29.

1. SMIL 2.0

SMIL 2.0 is a technical specification titled *Synchronized Multimedia Integration Language (SMIL 2.0)* that is directed to "an XML-based language that allows authors to write interactive multimedia presentations."

Ex. 1006, Abstract. The language allows users to "describe the temporal behavior of a multimedia presentation, associate hyperlinks with media objects and describe the layout of the presentation on a screen." *Id.*

Petitioner contends that SMIL 2.0 was publicly accessible on the World Wide Web Consortium's website at least as of November 9, 2001, and, as such, is prior art under at least 35 U.S.C. § 102(b). Pet. 15. In support of its argument, Petitioner provides printouts from the Internet Archive along with a declaration from Nathaniel E. Frank-White, an Internet Archive employee. Ex. 1011. Patent Owner does not contest the prior art status of SMIL 2.0 at this juncture. For purposes of this Decision, we determine that SMIL 2.0 qualifies as a prior art printed publication under 35 U.S.C. § 102(b) because SMIL 2.0's public accessibility date of November 9, 2001, is more than one year before the earliest effective filing date of the challenged claims, which is April 30, 2004. Ex. 1001, code (60); Ex. 1011.

2. Discussion

Building on its contentions in the Ogdon–Allen ground, Petitioner cites SMIL 2.0 "[t]o the extent it is argued that Ogdon in view of Allen lacks certain limitations, for example that each corresponding first streamlet has the same or equal first duration." Pet. 55. In particular, Petitioner cites "a SMIL element called '<switch>' that 'allows an author to specify a set of alternative elements encoded at different quality levels from which only the first acceptable element is chosen.'"[8] *Id.* (quoting Ex. 1006, 61). Petitioner

[8] This quotation from the Petition does not appear to accurately reflect the language in SMIL 2.0. The actual language in SMIL 2.0 is: "The switch

also cites "a SMIL element called '<seq>' which 'defines a sequence' such that 'media elements play one after the other' . . . and control[s] duration of such media elements using the 'dur' attribute." *Id.* (quoting Ex. 1006, 158) (citing Ex. 1006, 125–28). Petitioner additionally cites an example from SMIL 2.0 using "<seq>" and "dur" that allegedly shows alternative segments of equal duration. *Id.* at 55–56 (citing Ex. 1003 ¶¶ 143–146; Ex. 1006, 273).[9]

Based on these teachings, Petitioner contends that an ordinarily skilled artisan

> would have been motivated to ensure that each alternative segment in Ogdon had the same or equal duration, *e.g.*, 5 seconds as taught by SMIL 2.0, in order to ensure that when a switch is made to an alternative segment the alternative segment is a perfect replacement for preferred segment and so that when switching to a different version during the presentation the user still experiences a seamless presentation.

Pet. 56 (citing Ex. 1003 ¶ 146). Petitioner also argues that an ordinarily skilled artisan would have expected success in making this "straightforward modification" because "both Ogdon and SMIL 2.0 are drawn to similar systems of client-server based streaming including allowing the client to determine which alternative files to choose based on system attributes." *Id.*

Patent Owner relies on the same arguments discussed above for the Ogdon–Allen ground, and Patent Owner does not dispute Petitioner's

---

element allows an author to specify a set of alternative elements from which only the first acceptable element is chosen." Ex. 1006, 61. Notwithstanding, the surrounding discussion in SMIL 2.0 supports Petitioner's premise. *See id.* at 61–62.

[9] Petitioner also cites SMIL 2.0 for teaching certain "virtual timeline" limitations in the challenged claims. *See* Pet. 57–58.

rationale for combining SMIL 2.0 with Ogdon and Allen. *See* Prelim. Resp. 29. Based on the present record, we are persuaded preliminarily that Petitioner's cited disclosures in SMIL 2.0 about the "<switch>" and "<seq>" elements and the "dur" attribute teach the limitations in the challenged claims directed to streamlets of the same duration. *See, e.g.*, Ex. 1003 ¶¶ 143–146; Ex. 1006, 61, 125–28, 158, 273. We also are persuaded preliminarily that an ordinarily skilled artisan would have had reason to combine SMIL 2.0 with Ogdon and Allen with expected success. *See, e.g.*, Ex. 1003 ¶ 146. For these reasons and the reasons discussed above with respect to the Ogdon–Allen ground, we determine based on the record at this time that Petitioner has established a reasonable likelihood that it would prevail in showing that the subject matter of the challenged claims would have been obvious over the combination of Ogdon, Allen, and SMIL 2.0.

F. Patent Owner's Arguments Regarding Discretionary Denial Under 35 U.S.C. § 325(d)

Although Patent Owner acknowledges that the prior art references asserted in this case were not analyzed by the Office during prosecution of the '554 patent, Patent Owner argues that Ogdon, "is cumulative to (and even less relevant than) Carmel,[10] which was already considered" during prosecution of related U.S. Patent No. 11,470,138 B2 ("the '138 patent").[11]

---

[10] U.S. Patent No. 6,389,473 B1, filed Mar. 24, 1999, issued May 14, 2002 (Ex. 2004, "Carmel").

[11] We have entered a copy of the '138 patent in the record as Exhibit 3001. Concurrent with this Decision, we institute an *inter partes* review of certain claims of the '138 patent in IPR2024-00044.

Prelim. Resp. 30. Accordingly, Patent Owner urges us to exercise our discretion to deny institution under 35 U.S.C. § 325(d). *Id.* at 38.

The Board uses a two-part framework in determining whether to exercise its discretion under § 325(d), specifically:

> (1) whether the same or substantially the same art previously was presented to the Office or whether the same or substantially the same arguments previously were presented to the Office; and (2) if either condition of [the] first part of the framework is satisfied, whether the petitioner has demonstrated that the Office erred in a manner material to the patentability of challenged claims.

Advanced Bionics, LLC v. Med-El Elektromedizinische Geräte GmbH, IPR2019-01469, Paper 6 at 8 (PTAB Feb. 13, 2020) (precedential). In applying the two-part framework, we consider several non-exclusive factors, including:

> (a) the similarities and material differences between the asserted art and the prior art involved during examination; (b) the cumulative nature of the asserted art and the prior art evaluated during examination; (c) the extent to which the asserted art was evaluated during examination, including whether the prior art was the basis for rejection; (d) the extent of the overlap between the arguments made during examination and the manner in which Petitioner relies on the prior art or Patent Owner distinguishes the prior art; (e) whether Petitioner has pointed out sufficiently how the Examiner erred in its evaluation of the asserted prior art; and (f) the extent to which additional evidence and facts presented in the Petition warrant reconsideration of the prior art or arguments.

Becton, Dickinson & Co. v. B. Braun Melsungen AG, IPR2017-01586, Paper 8 at 17–18 (PTAB Dec. 15, 2017) (precedential as to Section III.C.5, first paragraph; otherwise informative) ("*Becton, Dickinson*"). If, after review of factors (a), (b), and (d), we determine that the same or

substantially the same art or arguments previously were presented to the Office, then factors (c), (e), and (f) relate to whether the petitioner demonstrates that the Office erred in a manner material to the patentability of the challenged claims. *Advanced Bionics*, Paper 6 at 10.

Carmel is a U.S. patent directed to "real-time multimedia broadcasting over a network." Ex. 2004, 1:10–12. Carmel discloses "a transmitting computer generates a data stream and broadcasts the data stream via a network server to a plurality of clients" by dividing the data stream "into a sequence of segments or slices of the data, preferably time slices, wherein the data are preferably compressed." *Id.* at 2:1–6. Carmel's "slices are provided by the server at multiple resolution or quality levels," and "[e]ach such level has a different degree of data compression, and thus corresponds to a different data bandwidth requirement." *Id.* at 3:5–8. "The client or the server monitors the data transfer rate of a data link opened therebetween and selects the level that is appropriate to the link bandwidth." *Id.* at 3:8–11.

Patent Owner contends that "all of the relevant Ogdon disclosures are substantially similar, (albeit even less relevant to the Challenged Claims), compared to the disclosures of Carmel." Prelim. Resp. 33. In support of this contention, Patent Owner provides a chart showing similarities between Ogdon and Carmel related to various "Claimed Feature[s]," including "Streaming," "Streamlet," and "Switching between qualities." *Id.* at 33–36. Notwithstanding, Patent Owner acknowledges the Examiner's conclusion that "Carmel taught away from the combination of claim limitations [in the claims of the '138 patent] because Carmel focused on maintaining the same size of a streamlet rather than the same duration." *Id.* at 36 (citing Ex. 2002, 1264–67). According to Patent Owner, Ogdon's teachings of segments with

different versions having "approximately the same presentation duration" do not fare better than Carmel and do not suggest the claimed "streamlets" of the '554 patent having the same length. *Id.* at 36–37 (emphasis omitted) (quoting Ex. 1004, 2:43–55). Patent Owner also contends that "the analysis of Carmel in the '138 Patent's prosecution is relevant here" based on, *inter alia*, "the close relationship of the family of patents." *Id.* at 32.

Petitioner argues that "[d]enial under § 325(d) is not warranted . . . because the specific grounds here were not considered during prosecution of the '554 Patent" and none of the asserted references are cited on the face of the '554 patent. Pet. 62.

Turning to the first stage of the *Advanced Bionics* framework, we consider "whether the same or substantially the same art previously was presented to the Office." *Advanced Bionics*, Paper 6 at 8. We note that Carmel is listed as cited art on the '554 patent (*see* Ex. 1001, code (56); *see also* Ex. 1002, 426 (Information Disclosure Statement listing Carmel that was filed during prosecution of the '554 patent)), though Carmel was not applied by the Examiner during prosecution of the '554 patent. In contrast, Carmel was applied by the Examiner during prosecution of the '138 patent. Ex. 2002, 1264–67. Thus, although we agree with Petitioner (Pet. 63–64) that Ogdon was not cited during prosecution of the '554 patent, we nonetheless consider whether Ogdon is substantially the same as Carmel given Carmel's citation on the '554 patent.

We determine that Ogdon is not substantially the same as Carmel because there are differences between them material to the way the Office previously considered the art. *See Nokia of Am. Corp. v. Soto*, IPR2023-00680, Paper 18 at 6 (Vidal Mar. 28, 2024) ("[P]rior art references are not

'substantially the same' when there are differences between them that are material to the Office's prior consideration of the art." (citing *Wolfspeed, Inc. v. Trustees of Purdue University*, IPR2022-00761, Paper 13 at 7–8 (Vidal Mar. 30, 2023)). Patent Owner acknowledges that, during prosecution of the '138 patent, the Examiner distinguished Carmel because it did not teach streamlets of the same duration. Prelim. Resp. 36 (citing Ex. 2002, 1264–67). In contrast, Petitioner cites Ogdon in the Petition for teaching, *inter alia*, segments that have "approximately the same presentation duration." *See, e.g.*, Pet. 24 (quoting Ex. 1004, 2:49–55). For the same reasons discussed above (*see supra* § II.D.3.f), and based on the present record, we disagree with Patent Owner (Prelim. Resp. 36–37) that this disclosure does not teach streamlets of the same length. As such, we find that Petitioner applies Ogdon in a manner that is distinguishable from the way Carmel was understood by the Examiner, as shown by the prosecution of the '138 patent. Thus, we find that the same or substantially the same art or arguments were not previously presented, so we need not proceed past the first stage of the *Advanced Bionics* framework with respect to Ogdon. *Advanced Bionics*, Paper 6 at 8.

Patent Owner's arguments related to SMIL 2.0 (Prelim. Resp. 37–38) rely on the same arguments discussed above with respect to Ogdon, and are distinguishable on the same basis.

Accordingly, we do not exercise our discretion to deny the Petition under 35 U.S.C. § 325(d).

III. CONCLUSION

After considering the evidence and arguments presented in the current record, we determine that Petitioner has demonstrated a reasonable likelihood that it would prevail with respect to at least one of the claims challenged in the Petition. Accordingly, we institute an *inter partes* review on all of the challenged claims and all grounds presented in the Petition. At this stage of the proceeding, we have not made a final determination as to the patentability of the challenged claims.

IV. ORDER

Accordingly, it is

ORDERED that pursuant to 35 U.S.C. § 314, *inter partes* review is instituted as to claims 1–5, 7, 8, 10–14, 16–20, 22–28, and 30 of the ’554 patent with respect to all grounds of unpatentability presented in the Petition; and

FURTHER ORDERED that *inter partes* review is commenced on the entry date of this Order, and pursuant to 35 U.S.C. § 314(c) and 37 C.F.R. § 42.4, notice is hereby given of the institution of a trial.

PETITIONER:

Frank Gasparo
William Hector
VENABLE LLP
fmgasparo@venable.com
wahector@venable.com

PATENT OWNER:

Eliot Williams
George Guy
Ali Dhanani
Thomas Carter
BAKER BOTTS L.L.P.
eliot.williams@bakerbotts.com
hop.guy@bakerbotts.com
ali.dhanani@bakerbotts.com
thomas.carter@bakerbotts.com

kis