Brent O. Hatch (5715)
hatch@hatchpc.com
Adam M. Pace (14278)
pace@hatchpc.com
HATCH LAW GROUP, P.C.
22 East 100 South, Suite 400
Salt Lake City, Utah 84111
Telephone: (801) 869-1919

IN THE UNITED STATES DISTRICT COURT

DISTRICT OF UTAH, CENTRAL DIVISION

DISH TECHNOLOGIES L.L.C. and SLING TV L.L.C. Plaintiffs, v. MG PREMIUM LTD, MG BILLING LTD, and MG BILLING IRELAND LTD, SONESTA TECHNOLOGIES, s.r.o., SONESTA MEDIA, s.r.o., and YELLOW PRODUCTION, s.r.o. Defendants.	**MOTION FOR PRELIMINARY INJUNCTION** Case: 2:23-cv-552-BSJ Judge: The Honorable Bruce S. Jenkins

Pursuant to Federal Rule of Civil Procedure ("Rule") 65 and 35 U.S.C. § 283, Plaintiffs DISH Technologies L.L.C. and Sling TV L.L.C. (collectively, "DISH") move the Court to enter a preliminary injunction against Defendants MG Premium Ltd, MG Billing Ltd, MG Billing Ireland Ltd, Sonesta Technologies, s.r.o., Sonesta Media, s.r.o., and Yellow Production, s.r.o. (collectively, the "MG Defendants"), enjoining them from infringing DISH's adaptive bitrate patents pending a final judgment on the merits.

TABLE OF CONTENTS

Page

I. INTRODUCTION 1

II. STATEMENT OF FACTS 4

a. DISH's Patented ABR Technology 5

b. Background of the HTTP Live Streaming ("HLS") Protocol 6

c. The ITC ABR Litigation 8

d. Technology in the Accused Websites 9

e. MG Defendants' Corporate Structure 9

f. MG Defendants' Pending Lawsuits 12

g. DISH's Efforts to License the ABR Patents 12

III. ARGUMENT 13

a. The Court Should Enter a Preliminary Injunction to Prevent the MG Defendants' Ongoing Infringement of DISH's Asserted Patents 13

i. DISH Has a High Likelihood of Success on the Merits. 13

1. The Accused Websites Infringe the Asserted Patents 14

a. Claim Construction 14

b. Infringement Analysis 14

c. Induced Infringement 17

2. The Asserted Patents are Presumptively Valid 19

ii. DISH Will Suffer Irreparable Harm If Injunctive Relief Is Not Granted to Prevent Ongoing Infringement by the MG Defendants. 19

iii. The Balance of Hardships Weighs in Favor of an Injunction. 23

iv. Public Interest Favors an Injunction. 24

b. Bond 24

c. Entities Bound.....24

IV. CONCLUSION.....25

TABLE OF AUTHORITIES

Page(s)

CASES

Abbott v. Sandoz, Inc.,

544 F.3d 1341 (Fed. Cir. 2008).....23

Aevoe Corp. v. AE Tech Co.,

727 F.3d 1375 (Fed. Cir. 2013).....25

Aevoe Corp. v. Shenzhen Membrane Precise Electron Ltd.,

No. 2:12-CV-00054, 2012 WL 1532308 (D. Nev. May 1, 2012) 19

Akzo Nobel Coatings, Inc. v. Dow Chem. Co.,

811 F.3d 1334 (Fed. Cir. 2016).....15

Biagro v. Grow More,

423 F.3d 1296 (Fed. Cir. 2005).....14

Blocher v. MindGeek USA Inc.,

No. 3:23-CV-00209-MMD (D. Nev.).....12

Bushnell, Inc. v. Brunton Co.,

673 F. Supp. 2d 1241 (D. Kan. 2009).....20

In re Certain Fitness Devices, Streaming Components Thereof, and Systems Containing Same,

Inv. No. 337-TA-1265 .....3, 9, 14, 15, 17, 19

Coquina Oil Corp. v. Transwestern Pipeline Co.,

825 F.2d 1461 (10th Cir. 1987) 24

Cordelia Lighting, Inc. v. Zhejiang Yankon Grp. Co.,

No. 14-cv-881, 2015 WL 12656241 (C.D. Cal. Apr. 27, 2015).....20

CV1 Mother v. Franklin,

No. 2:22-cv-605-ECM (M.D. Ala) 12

DISH Technologies L.L.C. et al. v. Jadoo TV, Inc.,

No. 5-18-CV-05214, Dkt. 97 (N.D. Cal. May 28, 2021).....23

DJ Direct, Inc. v. Margaliot,

512 F. Supp. 3d 396 (E.D.N.Y. 2021), *appeal withdrawn sub nom. DJ Direct, Inc. v. JCB Max LLC*, 2021 WL 3555968 (2d Cir. Jul. 13, 2021).....24

Doe et al. v. MG Freesites, Ltd.,

No. 7:21-cv-220-LSC (N.D. Al) 12

Doe v. Mindgeek USA Inc.,

No. 2:22-cv-1016-DMG, Dkt. No. 29-3 (C.D. Cal.) 10

Doe v. Mindgeek USA Inc.,

No. 21-cv-338-CJC (C.D. Cal.) 12

DSU Med. Corn. v. JMS Co.,

471 F.3d 1293 (Fed. Cir. 2006).....18

Enercon v. Int'l Trade Comm'n,

151 F.3d 1376 (Fed. Cir. 1998).....15

Fleites v. MG Freesites, Ltd.,

No. 2:21-cv-04920-CJC-ADS (C.D. Cal.), Dkt. No. 70-2.....5, 11, 22

Fleites v. MindGeek S.à.r.l,

No. 2:21-cv-04920-CJC (C.D. Cal) 12

FMC Corp. v. United States,

3 F.3d 424 (Fed. Cir. 1993).....14

Hand & Nail Harmony, Inc. v. Guangzhou Cocome Cosmetics Co.,

No. 2:14-cv-01106-RFB-CWH, 2014 WL 4809928 (D. Nev. Sept. 26 2014).....20

HDMI Licensing Adm'r Inc. v. Chunghsin Tech. Grp. Co.,

No. 20-CV-00028, 2020 WL 364121 (D. Nev. Jan. 21, 2020).....19

High Tech Med. Instrumentation, Inc. v. New Image Indus., Inc.,

49 F.3d 1551 (Fed. Cir. 1995).....13

Hybritech Inc. v. Abbott Lab'ys,

849 F.2d 1446 (Fed. Cir. 1988).....23, 24

Jane Doe Nos. 1 through 40 v. MG Freesites, Ltd.,

No. 3:20-cv-02440-WQH (S.D. Cal.).....12

Jane Does 1-9 v. Murphy,

No. 7:20-cv-00947, Dkt. No. 233 (D.S.C.).....10

MEMC Elec. Materials, Inc. v. Mitsubishi Materials Silicon Corp.,

420 F.3d 1369 (Fed. Cir. 2005).....18

MG Freesites, Ltd v. Dish Techs. L.L.C.,

No. 3:23-cv-3674 (N.D. Cal. Jul. 25, 2023) 13

Phillips v. AWH.

415 F.3d 1303 (Fed. Cir. 2015).....14

Revision Military, Inc. v. Balboa Mfg. Co.,

700 F.3d 524 (Fed Cir. 2012).....13, 14

Sanofi-Sythelabo v. Apotex, Inc.,

470 F.3d 1368 (Fed. Cir. 2006).....24

Scalia v. Paragon Contractors Corp.,

796 F. App'x 962 (10th Cir. 2019) 25

Tinnus v. Telebrands,

846 F.3d 1190 (Fed. Cir. 2017).....14

Titan v. Case New Holland,

566 F.3d 1372 (Fed. Cir. 2009).....19

Unwired Planet, LLC v. Apple Inc.,

829 F.3d 1353 (Fed. Cir. 2016).....18

Windsurfing Int'l, Inc. v. AMF, Inc.,

782 F.2d 995 (Fed. Cir. 1986).....24

XY, LLC v. Trans Ova Genetics, L.C.,

No. 13-cv-00876, 2014 WL 12982679 (D. Colo. 2014).....20

STATUTES

35 U.S.C. § 271(a) 15

35 U.S.C. § 283.....13

I. INTRODUCTION

DISH seeks immediate injunctive relief to enforce its U.S. Patents. DISH requests this extraordinary preliminary relief because traditional forms of monetary relief appear very unlikely in the future. In connection with recent motions to defeat jurisdiction, the MG Defendants provided sworn testimony claiming they have no presence in the United States. Indeed, the majority of the MG Defendants reside in the Republic of Cyprus—a known haven for asset protection—at an address appearing to be little more than a mail drop. In short, DISH has little hope of ever collecting any money judgment in Cyprus, and thus consistent with controlling case law, this Court should issue a preliminary injunction now.[1]

DISH, through Sling TV, provides streaming media over the Internet. DISH owns and uses U.S. Patent Nos. 10,469,554, 11,677,798, 9,407,564, 10,951,680, 8,868,772, and 11,470,138 (collectively, "Asserted ABR Patents")[2] covering Adaptive Bit Rate ("ABR") technology. ABR technology significantly improves video streaming over the Internet. Using these ABR inventions, a website can provide the highest resolution video images that an available network connection allows using low-cost data servers.

MindGeek's empire collectively represents the second largest portfolio of adult and pornographic streaming websites in the United States. The parent, MindGeek S.à.r.l., segregates every conceivable component of its adult content offerings into a complicated conglomerate of over 200 active or dormant corporate entities. One subsidiary offers free adult content through Pornhub, a platform that cleverly embeds hyper-links and content to strategically lead free site viewers to the subscription-based Accused Websites that are owned and operated by other MindGeek subsidiaries, including the MG Defendants. Payment for paid subscriptions appears to

[1] *See* Ex. EEE, *Cyprus: Searching for the money of Russian Oligarchs*, App'x 1344.
[2] *See* Dkt. Nos. 1-1, 1-2, 1-3, 1-4, 1-5, 1-6, respectively.

occur through an Ireland entity doing business in Cyprus (MG Billing Ltd), yet paid content is handled by MG Premium Ltd. However, all Defendants rely extensively on the ABR technology to provide at least forty-seven different subscription-based adult content websites[3] to customers across the United States, many of which are linked to the free Pornhub website.[4] A user would never know that these sites belong to different entities since all work from the Pornhub website.

All the MG Defendants make extensive use of DISH's ABR technology in delivering their adult videos. Without DISH's ABR technology, high resolution video images often stall or freeze during streaming, with the user typically seeing only a spinning wheel or hourglass image while the video is being downloaded. Freezing or stalling during a movie typically disrupts the flow of the movie and is annoying. In the case of adult content, the MG Defendants' videos that are expressly advertised as high-definition or "HD," 2K or 4K are typically sold at higher subscription rates. The MG Defendants therefore charge higher rates for using DISH's ABR inventions. No doubt, high-definition, non-freezing video is critical to Defendants' sales of adult content.

DISH's need for preliminary relief is not unique. Cyprus is a known haven for those seeking to hide assets. From Russian oligarchs to dictators, corporate entities and individuals have used Cyprus as a pirates' cove to hide assets and avoid judgments, and, with respect to Russian oligarchs, to avoid criminal and economic sanctions.[5] Recent attempts to enforce judgments in Cyprus by the United States government itself demonstrates this difficulty (or near impossibility)

---

3 Exhibit DDD, App'x 1340, is a list of the currently-known subscription-based websites offered by the Defendants using ABR technology.

[4] Utah's Senate Bill 287 took effect in May 2023, prompting the MG Defendants to voluntarily cease providing their adult videos to users accessing their sites from Internet Protocol addresses within Utah. *See* Ex. E, *Utah's Porn Crackdown Has a VPN Problem*, App'x 0169. As Exhibit E notes, Utahans can—and many still do—access and stream the adult videos on the MG Defendants' sites through Virtual Private Networks ("VPNs"). *See id.*

[5] *See* Ex. EEE, *Cyprus: Searching for the money of Russian Oligarchs*, App'x 1346-1351.

to collect.[6]

Unique to DISH is the fact that many of its patents expire on April 30, 2025. At that point, even if DISH obtains a monetary judgment, it will most likely be worthless. Yet, the MG Defendants will have infringed DISH's ABR patents for the intervening years and will have caused irreparable harm to DISH. A preliminary injunction avoids this inequitable result.

With this background, DISH requests, and meets the elements for, preliminary injunctive relief. *First*, DISH is likely to succeed on the merits of validity and infringement of the Asserted Patents. Two of the Asserted Patents recently prevailed in a validity challenge before the U.S. International Trade Commission ("ITC") in *Certain Fitness Devices, Streaming Components Thereof, and Systems Containing Same*, Inv. No. 337-TA-1265 ("the ITC Action"). DISH also established infringement of the Asserted Patents against three different entities in the heavily-contested ITC Action—Peloton Interactive, Inc. ("Peloton"); iFIT, Inc.; and Lululemon Athletica Inc. (collectively, "ITC Respondents")—using the exact same methodologies it used to test and confirm infringement here. Indeed, the MG Defendants use the same streaming protocol—HTTP Live Streaming ("HLS")—that the ITC expressly found to infringe two Asserted Patents.

Second, DISH faces irreparable harm if the MG Defendants' infringement is not halted immediately. Even greater recovery than the $75 million in licensing royalties DISH collected from Peloton in the ITC Action is warranted here due to the MG Defendants' substantially larger U.S. userbase. But despite that U.S. userbase, the MG Defendants appear to have no domestic presence. Instead, the MG Defendants hide behind an intentionally complex web of foreign entities to avoid ever having to pay a judgment in the U.S. Without an injunction now, the MG Defendants, or other entities within the MG corporate structure, will be able to continue providing infringing

[6] *Id.*

content throughout the U.S. with little to no certainty that DISH will be able to recover any legal judgment against them. DISH's inability to collect damages for the MG Defendants' ongoing infringement would cause DISH irreparable harm.

Third, the unlikelihood that DISH will be able to recover monetary damages from the MG Defendants' while the MG Defendants continue infringing DISH's patent rights tips the balance of the hardships in DISH's favor. Adding to this hardship is the fact that the Asserted Patents begin expiring in April 2025, such that postponing their enforcement would effectively provide DISH no relief. On the other hand, the MG Defendants would suffer only insubstantial harm if they were to license the Asserted Patents or modify their websites to use non-adaptive streaming. Other entities already have successfully pursued each of these options.

Lastly, the public interest is best served by protecting valid and enforceable patent rights. Any alleged public interest in consuming the MG Defendants' infringing content during the pendency of this lawsuit does not amount to a critical public interest and certainly does not outweigh the overarching public interest in enforcing DISH's patent rights.

Given these concerns and the fact that certain of the Asserted Patents will expire in April 2025, the only remedy available is a preliminary injunction lasting until the earlier of the expiration of the Asserted Patents or the entry of final judgment in this matter.

II. STATEMENT OF FACTS

1. DISH is an American company, founded by Charlie Ergen, his wife, and his best friend in rural Colorado in 1980. Since launching their first satellites in 1995, DISH and its affiliated companies have invested millions of dollars in the U.S. for research and development and the acquisition of novel technologies to resolve long felt problems across its industry. One such investment was the acquisition of Utah-based MOVE Networks ("Move"), inventor of the patented ABR technology at issue. As explained by Forbes in May 2007, Move, with its ABR

technology, was "at the forefront" of Internet streaming.[7] This disruptive technology embodied in the Asserted Patents revolutionized streaming and has won wide-ranging accolades.[8]

2. In contrast, the MG Defendants own the second largest number of pornographic aggregator "tube sites" in the world, which are so named because they mimic YouTube's format of generating revenue from user-created content that is uploaded for free. They have no discernable U.S. assets or presence, which they have claimed repeatedly in prior litigations.[9] Instead, they employ a foreign corporate structure that obfuscates and conceals the true nature and scope of their operations. MG's founder and former managing partner was arrested and sent to prison for tax evasion.[10] Recently, MG rebranded all of its entities, including the MG Defendants, as "Aylo"[11] due to their tremendous exploitative behavior and bad press.[12]

a. DISH's Patented ABR Technology

3. Located in American Fork, Utah, three inventors at Move invented HTTP-based ABR streaming to improve the quality of video content delivered over the Internet. Prior to this innovative technology, users were left with two mediocre choices: (1) waiting for content to download before playback; or (2) unreliable, glitchy, and/or low-resolution streaming.[13]

---

[7] Ex. F, *Better Than YouTube*, App'x 0175.
[8] *See, e.g.*, Ex. G, *Here Comes More HD Video*, App'x 0178; Ex. H, *Pushing to Bring TV to the Internet*, App'x 0181-0182; Ex. I, *ABC.com makes watching TV at work better*, App'x 0184; Ex. J, *Online HD*, App'x 0188.
[9] *See* Ex. K, Decl. of A. Andreou, *Fleites v. MG Freesites, Ltd.*, No. 2:21-cv-04920-CJC-ADS (C.D. Cal.), Dkt. 70-2 ("*Fleites* Andreou Dec."), at ¶ 6, App'x 0193.
[10] Ex. L, *Fabian Thylmann, 'the ruler of the Realms of Lust', is arrested for alleged tax evasion*, App'x 0200; Ex. M, *Fabian Thylmann Sentenced for Tax Evasion in Germany*, App'x 0208.
[11] Ex. N, *MindGeek Becomes Aylo*, App'x 0211; Ex. O, *MindGeek becomes Aylo: Battling lawsuits, Pornhub parent gets a name change*, App'x 0216-0218. Due to the MG Defendant's ongoing rebranding efforts, and to avoid confusion, DISH will refer to entities within the MG corporate structure with their names prior to the "Aylo" name change.
[12] *See generally* Ex. P, *Congressional briefing on MindGeek's Pornhub Empire*, App'x 0228-0237; Ex. Q, *The Real Pornhub Story*, App'x 0239-0254; Ex. R, *Class-action lawsuit filed in Quebec against Pornhub parent company*, App'x 0257-0259.
[13] Dkt. 1-3, '564 Patent at 1:52-54.

4. Move's HTTP-based ABR streaming addressed the "need ... for an [invention] that alleviate[s] the problems of reliability, efficiency, and latency" in then-available streaming[14] by using intelligent end-user clients that "pull" content from a server as opposed to servers that "push" content to the clients. Rather than downloading simple content files in their entirety during or before playback, the operator must segment the files into sets of streamlets of different qualities (*e.g.*, high, medium, and low), where the streamlets are aligned by start time and duration, as shown below, and can be requested and presented sequentially:[15]

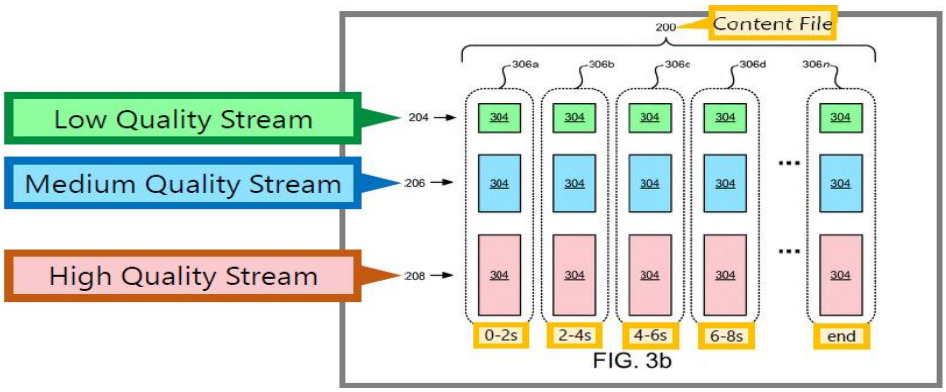

5. The alignment of the streamlets across the sets allows a client device to switch between the different quality streamlets on-the-fly in response to changing network conditions by simply requesting different streamlets. For example, when the bandwidth of the user's network is constrained, the client can request lower bitrate streamlets to maintain playback at a lower quality instead of buffering or freezing. The claimed inventions thus enable users to watch content at the highest possible bitrate as the media is streamed, while reducing overall latency.

b. Background of the HTTP Live Streaming ("HLS") Protocol

6. The claimed inventions may be implemented through the "HTTP Live Streaming,"

[14] *See, e.g.*, *id.* at 2:39-41.
[15] *Id.*, '564 Patent at Fig. 3b (annotations added). The image above is a content file for a 30-minute video. The file is segmented into two-second streamlets for three qualities of streams for the video—low-, medium-, and high-quality streams, which creates 2,700 accessible streamlets.

or "HLS," protocol.[16] Under this protocol, long-form video programs are broken up into several streamlets of different resolutions (*e.g.*, 1280x1080, 1080x720, 640x360) and identified by a Uniform Resource Identifier ("URI") in a Media Playlist or Master Manifest.[17] The URIs in the Master Manifest correspond to video bandwidths or qualities (128, 256, and 768 kbps) supporting three resolutions ("low," "mid," and "hi").[18]

7. For example, according to the HLS protocol, a video program offering low-, medium-, and high-quality resolutions will have: one Master Manifest specifying the three resolutions offered for the video program and three Variant Playlists (one for each resolution).[19]

8. Importantly, the Asserted Patents teach that each streamlet within each Variant Playlist has a corresponding streamlet in the other Variant Playlists encoding the same portion of the video program and the same first few seconds, but at a different bitrate.[20] An exemplary relationship between the Master Manifest, Variant Playlists, and streamlets is shown below:

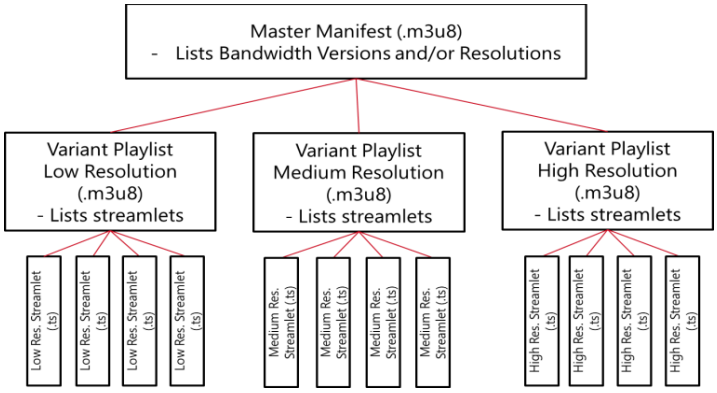

9. Because multiple Media Segments, or streamlets, of different streaming quality are

[16] Ex. C, Expert Declaration of Kevin J. Negus, Ph.D. In Support of Preliminary Injunction ("Negus Dec."), Section IV, App'x 0027-0030.
[17] Ex. S, HTTP Live Streaming, Independent Submission, Request for Comments, RFC 8216, R. Pantos and W. May, August 2017 ("RFC 8216"), App'x 0266-0267 (annotations added).
[18] Ex. C, Negus Dec., Section IV, App'x 0027-0030.
[19] *See id*; *see generally* Ex. S, RFC 8216, App'x 0312-0313.
[20] Ex. C, Negus Dec., Section IV, App'x 0027-0030.

provided and readily downloadable, a streaming device can automatically switch its requests for the streamlet at the highest supportable resolution as network connections improve or worsen.[21] The result is uninterrupted video playback, such that all a user may notice is a change in resolution of the video program being viewed.[22] In the case where a user's network connection worsens, for example, the user's display may look "fuzzy" or "granular" in subsequent segments.[23] In the case where the connection improves, on the other hand, the user's display may look "sharper" or "clearer" in subsequent segments.[24]

c. The ITC ABR Litigation

10. In the ITC Action, DISH asserted claims 1, 3, 4, and 5 of the '564 Patent and claims 16, 17, and 20 of '554 Patent against each of the ITC Respondents.[25] A five-day evidentiary hearing was held in March of 2022.[26] And on September 9, 2022, in a lengthy 262-page Order, the Chief Administrative Law Judge ("ALJ") found that the patents were valid and found infringement of the asserted claims, which the ITC confirmed on March 23, 2023.[27]

11. Each of the three ITC Respondents' devices were found to infringe two Asserted Patents in the ITC Action by using the HLS protocol to stream video from servers to end-user devices.[28]

12. At least claim 16 of the '554 Patent is infringed here by the MG Defendants, and for the same reason—specifically, they use the HLS protocol in the same manner. Ex. C ¶ 59.

---

[21] *Id.*
[22] *Id.*
[23] *Id.*
[24] *Id.*
[25] Ex. T, ITC Action Initial Determination (Sept. 9, 2022) ("ID"), at 1, App'x 0331.
[26] *Id.*, at 3, App'x 0333.
[27] *Id.*, at 262, App'x 0592; Ex. U, ITC Action Commission Opinion ("Comm'n Op."), at 4-5, 33, 93, App'x 0599-0600, 0623.
[28] Ex. T, ID, at 20, App'x 0350.

d. Technology in the Accused Websites

13. The MG Defendants stream adult content through subscription platforms, including the forty-seven platforms identified in DISH's Complaint.[29] In a 2019 interview, the MG Defendants stated that they strive to mimic the seamless ABR streaming system taught by HLS, "otherwise the video would constantly stutter and have artifacts."[30]

14. An example of MG Defendants' accused streaming services and products is Brazzers, which offers an adult content subscription offering live and on-demand videos through the Brazzers website on web browsers, such as Microsoft Edge, Google Chrome, or iOS Safari.[31]

15. DISH's technical expert, Dr. Negus, confirmed that Brazzers provides ABR streams using the HLS protocol.[32] An end-user station accessing the Brazzers website through a web browser makes streaming content available using HLS.[33] Tests conducted using Charles Proxy, a service that enables positive or negative throttling of the available bandwidth, demonstrated that Brazzers responded to lower and higher bandwidths in an infringing manner.[34]

e. MG Defendants' Corporate Structure

16. The MG Defendants either: (1) are incorporated abroad and appear to purposely have no operations, bank accounts, or collectible assets located in the U.S.; or (2) have no traceable assets to satisfy a judgment, as they receive no income from and have no public affiliation with other MG entities that collect revenues from subscription fees and/or advertisement revenue. And while, in other lawsuits, the MG Defendants' representatives have repeatedly used the same unfailingly cryptic language to describe their alleged liquidity—namely, that each of the MG

[29] Dkt. 1, ¶¶ 1, 4-6, 8-10.
[30] *See* Dkt. 1-7, *Interview with a Pornhub Web Developer*, DWB, dated Oct. 7, 2019.
[31] Ex. V, *Terms of Service, Brazzers*, App'x 0690.
[32] Ex. C, Negus Dec. at ¶¶ 57-60, App'x 0036.
[33] *Id.*
[34] *Id.*

Defendants is "adequately capitalized, possessing [their] own bank accounts … and serving as a party to and responsible for fulfilling [their] own contracts"[35]—the MG Defendants have provided no evidence or other indication that "adequately capitalized" means anything more than the least amount of capital sufficient to fulfill current operational obligations, much less a judgment for damages proportional to those suffered by DISH here.[36]

17. All MG Defendants either exist within the MG corporate umbrella or are in partnerships with MG and work collectively to provide the infringing websites.[37] Despite being separate on paper, the MG Defendants are controlled and operated by overlapping directors, officers, and employees and thus operate a united partnership.[38] As a result, the org chart for the MG entities is a dizzying web of complex relationships.[39]

18. The top MG entity, MindGeek S.à.r.l., "is nothing more than a holding company" and "does not exercise any control over the day-to-day decisions of [any] MindGeek corporate entit[y]."[40] According to sworn declarations by MG officers, MindGeek S.à.r.l. is incorporated in Luxembourg and has no offices or employees in the U.S. or elsewhere.[41]

19. MG Premium is organized in Cyprus; MG Billing and MG Billing Ireland are

---

[35] *See, e.g.*, Ex. W, Decl. of A. Andreou, *Doe v. Mindgeek USA Inc.*, No. 2:22-cv-1016-DMG, Dkt. 29-3 at ¶¶ 6, 8, 12, 15, 19, 24, 28 (C.D. Cal.), App'x 0700-0703.

[36] To be clear, DISH seriously questions the meaning of "adequately capitalized" as it is used in these declarations. DISH also believes that excess funds are disbursed throughout MG's corporate web for shielding from any third-party liability.

[37] Ex. X, Decl. of A. Andreou, *Jane Does 1-9 v. Murphy*, No. 7:20-cv-00947, Dkt. 233, ¶¶2-7, 16-19 (D.S.C.) ("*Jane Does* Andreou Dec."), App'x 0706-0708; Ex. Y, *Terms and Conditions, ProBiller Online Payment*, App'x 0713 (providing access to MG sites); Ex. B, Decl. of Don Aviv of Interfor Internal ("Interfor Dec."), ¶¶ 38-40,43-49, App'x 0013-0015.

[38] *See* Ex. B, ¶¶ 15, 21, App'x 0010-0011; Ex. RR, Decl. of A. Andreou, *Fleites v. MG Freesites Ltd*, 2:21-cv-04920-CJC-ADS, Dkt. 139-3, ¶ 26, App'x 1018.

[39] Ex. Z, *Offensive OSINT s01e05 - OSINT & Corporate espionage. Tentacles of Mindgeek part 1*, at 16, App'x 0735.

[40] Ex. K, *Fleites* Andreou Dec., ¶ 6, App'x 0193; Ex. X, *Jane Does* Andreou Dec., ¶6, App'x 0706.

[41] Ex. K, *Fleites* Andreou Dec., ¶ 6, App'x 0193.

organized in Ireland; and Sonesta Technologies, Sonesta Media, and Yellow Production are organized in the Czech Republic.[42] MG Premium, MG Billing, and MG Billing Ireland share the same physical address in Cyprus, while Sonesta Technologies, Sonesta Media, and Yellow Production each maintain a physical presence in the Czech Republic.[43] It is no coincidence that each of these locations, including Luxembourg, is a known tax haven.

20. Unlike MindGeek S.à.r.l., the MG Defendants play an active role in the infringing activities. MG Premium and Sonesta Technologies are listed as the "controller[s]" of numerous "paysites" offering paid subscriptions to their adult content.[44] MG Billing facilitates the collection of subscription fees for at least these websites, and its related entity, MG Billing Ireland, assists in the collection of these fees.[45] MG Premium's leaders include many of the same directors and officers for other MG entities, including the MG Defendants.[46]

21. On information and belief, the paysites operated by MG Premium include, but are not limited to: Brazzers, FAKETaxi, Bang Bros, FAKEHub, and more.[47] Sonesta Technologies holds itself out as the operator of the subscription-based adult site BangBros.[48] Sonesta Media owns certain intellectual property rights to content available on BangBros and, through licenses, other infringing sites operated by the MG Defendants.[49] Yellow Production produces and owns certain intellectual property rights to content available on infringing sites, such as FAKETaxi and

---

[42] Ex. AA, *Free Speech Coalition v. Colmenero*, No. 23-cv-917, Dkt. 1 at ¶¶ 16-17, App'x 0747.
[43] Ex. B, ¶¶ 14, 27, 34, 35, 41, 42, App'x 0011-0014.
[44] *See, e.g.*, Ex. K, *Fleites* Andreou Dec. ¶ 17, App'x 0195; Ex. BB, Terms of Service, BangBros, App'x 0772-0778.
[45] *See generally* Ex. B, at ¶¶26-33, App'x 0012-0013.
[46] Ex. B, at ¶¶ 15, 21, App'x 0010-0011.
[47] Ex. DDD, List of Known Streaming Services and Accused Sites, App'x 1341-1343.
[48] The BangBros website lists MG Premium's successor, AYLO Premium, as the site's "controller." Ex. BB, App'x 0772; *see also* Ex. AA, at ¶ 16, App'x 0747.
[49] Ex. AA, ¶¶ 16-17, 0747.

FAKEHub.[50] Yellow Production also licenses some of its rights to be uploaded to other infringing sites. These websites are collectively referenced as the "Accused Websites."

f. MG Defendants' Pending Lawsuits

22. Several MG entities, including certain MG Defendants, have been accused of participating in sex trafficking ventures, profiting from child sexual abuse, as well as engaging in RICO violations and other nefarious conduct.[51] The plaintiffs in these lawsuits have expressed serious doubts regarding the prospect of recovering a judgment against any MG entity.[52]

g. DISH's Efforts to License the ABR Patents

23. On March 17, 2023, prior to instituting the present action, DISH sent a letter to MindGeek S.à.r.l., informing MindGeek of its infringement of DISH's ABR patents, including the Asserted Patents ("DISH's Notice Letter").[53] MindGeek's outside lawyer, Frank Gasparo, responded requesting that further correspondence be directed to him.[54] After hearing nothing from Mr. Gasparo or MindGeek for nearly three months, on July 7, 2023, DISH sent "exemplary claim charts" showing infringement and requesting a meeting to discuss a license.[55]

24. On July 25, 2023, DISH and Mr. Gasparo set a call for the next day.[56] Hours after setting the call, but before the call could take place, an MG entity called MG Freesites Ltd, with

---

[50] *Id.*
[51] *See, e.g., Jane Doe Nos. 1 through 40 v. MG Freesites, Ltd.*, 3:20-cv-02440-WQH (S.D. Cal.); *Doe et al. v. MG Freesites, Ltd.*, 7:21-cv-220-LSC (N.D. Al); *Fleites v. MindGeek S.à.r.l*, 2:21-cv-04920-CJC (C.D. Cal); *Doe v. Mindgeek USA Inc.*, 21-cv-338-CJC (C.D. Cal.); *Blocher v. MindGeek USA Inc.*, No. 3:23-CV-00209-MMD (D. Nev.); *CV1 Mother v. Franklin*, 2:22-cv-605-ECM (M.D. Ala); *Doe v. Aylo Global Entertainment Inc.*, 2:23-cv-07488-MWF-AGR (C.D. Cal. 2023).
[52] *See e.g., Jane Doe Nos. 1 through 40*, 3:20-cv-02440-WQH, Dkt. 23 at ¶¶ 57, 59; *Doe*, 7:21-cv-220-LSC, Dkt. 22 at ¶¶ 24.
[53] *See* Dkt. 1-8. DISH's Notice Letter was sent to Anthony Penhale, the Chief Legal Officer of MindGeek. *See* Ex. CC, Anthony Penhale, LinkedIn, App'x 0779.
[54] *See* Dkt. 1-9.
[55] Dkt. 1-10.
[56] Dkt. 1-11.

Mr. Gasparo as its counsel, filed a declaratory judgment action against DISH.[57]

III. ARGUMENT

a. The Court Should Enter a Preliminary Injunction to Prevent the MG Defendants' Ongoing Infringement of DISH's Asserted Patents

"Congress has authorized district courts in patent cases to grant injunctions 'in accordance with the principles of equity to prevent the violation of any right secured by patent.'" *High Tech Med. Instrumentation, Inc. v. New Image Indus., Inc.*, 49 F.3d 1551, 1554 (Fed. Cir. 1995) (quoting 35 U.S.C. § 283). "[T]he standards applied to the grant of preliminary injunctions are the same in patent cases as in other areas of the law." *Id.*[58]

Courts consider the following four factors in determining whether to issue a preliminary injunction: "(1) whether the moving party is likely to succeed on the merits; (2) whether the moving party will suffer irreparable harm if a preliminary injunction is not granted; (3) whether the balance of hardships tips in favor of the moving party or the opponent; and (4) whether the grant of preliminary injunctive relief will adversely affect the public interest." *High Tech Med. Instrumentation*, 49 F.3d at 1553. "'No one factor, taken individually, is necessarily dispositive,' and 'the weakness of the showing regarding one factor may be overborne by the strength of the others.'" *FMC Corp. v. United States*, 3 F.3d 424, 427 (Fed. Cir. 1993)).

Here, all four factors weigh in favor of granting a preliminary injunction to prevent irreparable harm from the MG Defendants' ongoing infringement of DISH's Asserted Patents.

i. DISH Has a High Likelihood of Success on the Merits.

To demonstrate a likelihood of success on the merits, DISH "must show that it will likely

---

57 *See* Ex. DD, *MG Freesites, Ltd v. Dish Techs. L.L.C.*, 3:23-cv-3674, (N.D. Cal. Jul. 25, 2023), App'x 0790.

58 Federal Circuit law governs a preliminary injunction that involves substantive questions of patent law. *See Revision Military, Inc. v. Balboa Mfg. Co.*, 700 F.3d 524, 525 (Fed Cir. 2012).

prove infringement, and that it will likely withstand challenges, if any, to the validity of the patent[s].” *Tinnus v. Telebrands*, 846 F.3d 1190, 1202 (Fed. Cir. 2017) (internal citations and quotations omitted). It is enough to show that “success is more likely than not.” *Revision Military v. Balboa*, 700 F.3d 524, 526 (Fed. Cir. 2012). Here, the alleged infringement by the MG Defendants is substantially similar to the infringement by the ITC Respondents. Specifically, the Accused Websites use HLS to stream content in the same manner as was found to infringe in the ITC Action, which makes success on the merits highly likely.

1. The Accused Websites Infringe the Asserted Patents

An infringement analysis requires: (1) “claim construction to determine the scope and meaning of the asserted claims,” and (2) “a comparison of the properly construed claims with the allegedly infringing product.” *Biagro v. Grow More*, 423 F.3d 1296, 1301 (Fed. Cir. 2005).

a. Claim Construction

Claim construction begins with the words of the claims, which “are generally given their ordinary and customary meaning.” *Phillips v. AWH*. 415 F.3d 1303, 1312 (Fed. Cir. 2015). The ITC Action involving two Asserted Patents resulted in the following construction:[59]

Term	Construction in ITC Action	Evidence
Streamlet(s)	Any sized portion of a content file each of which is stored separately	Ex. T, ID, at 38-43

The remaining claim terms each have a readily apparent ordinary meaning.[60]

b. Infringement Analysis

Direct infringement consists of making, using, or selling a patented invention in the U.S. 35 U.S.C. § 271(a). A patentee bears the burden of proving infringement by a “preponderance of

[59] Ex. EE, Joint Claim Construction Chart, App’x 0807.
[60] Ex. T, ID, at 46-53, 65-75 (refuting arguments for construction in favor of plain meaning), App’x 0376-0383, 0395-495.

the evidence." *See, e.g., Enercon v. Int'l Trade Comm'n*, 151 F.3d 1376, 1384 (Fed. Cir. 1998). Literal infringement occurs when every limitation recited in the claim appears in the accused device. *Akzo Nobel Coatings, Inc. v. Dow Chem. Co.*, 811 F.3d 1334, 1341 (Fed. Cir. 2016).

(1) HLS for Adaptively Streaming Video was Found to Infringe DISH's ABR Patents in the ITC Action

In an 80-page infringement analysis[61] confirmed by the full ITC,[62] the Chief ALJ found that the ITC Respondents' accused streaming fitness equipment "that implement the HLS Standard" infringed several claims of the '554 and '564 Patents and claims of two other ABR Patents not asserted here.[63] Notably, the ITC Respondents' use of the standard HLS protocol was found to specifically infringe claim 16—the same claim asserted against the MG Defendants here.

(2) MG Defendants' Accused Websites Use HLS to Adaptively Stream Video in an Infringing Manner

The MG Defendants offer and operate the Accused Websites, such as Brazzers, to consumers within the U.S. through web browsers, media players, mobile devices, and streaming media servers.[64] Critically, the Accused Websites use the same HLS protocol used by the ITC Respondents' infringing devices without deviating from the standard HLS protocol.[65] More specifically, the Accused Websites use HLS to break up their video content into portions, encode variants having different qualities, and allow an end-user device to request a specific variant based on bandwidth limitations, as claimed in the Asserted Patents.[66]

---

[61] The Chief ALJ's lengthy 262-page opinion is unquestionably sound as it followed extensive discovery, expert reports, motions, a five-day evidentiary hearing during which both parties presented expert witnesses, and hundreds of pages of post-hearing briefing by all parties that identified issues for the ITC's consideration. Ex. T, ID, at 3, App'x 0333.
[62] Ex. U, Comm'n Op., App'x 0688.
[63] Ex. T, ID, at 135-144, App'x 0465-0474.
[64] *See supra*, ¶14; Ex. FF, Brazzers Live Videos, App'x 0822-0823.
[65] Ex. C, Negus Dec., at ¶¶ 57-62, App'x 0036-0037.
[66] Ex. WW-BBB.

DISH's testing confirmed that at least Brazzers infringes the Accused Patents by using the HLS protocol.[67] For example, as shown in the detailed infringement charts attached as Exhibits WW-BBB, when an end-user device made a request to view a video on the Brazzers site, the media player used by the Brazzers site requested and received a Master Manifest (*i.e.*, a "master.m3u8" file) according to the HLS protocol. This playlist file demonstrates that at least five different qualities, versions, or variants, of the video are available at varying bandwidths to perform ABR streaming on the Brazzers site using HLS.[68] Each of the five "Variant Streams" includes segments that encode the same portion of the video at various qualities. For example, the **1654630 Bandwidth** version can be considered a low-quality stream, the **3023543 Bandwidth** version can be considered a medium-quality stream, and the **4816531 Bandwidth** version can be considered a high-quality stream.

The device accessing the Brazzers site makes a determination to select a Variant Stream for a portion of the video, and then it requests and receives a link from the Master Manifest to a playlist for the specified Variant Stream.[69] In every subsequent request for the next portion of the video, if network conditions have changed, such as network congestion or a drop in bandwidth, the device can request a different (*e.g.*, lower quality) Variant Stream.[70]

DISH verified this was occurring by intentionally restraining the bandwidth to the Brazzers site. After initially requesting a higher bandwidth Variant Manifest, DISH observed that the device downshifted to request a lower bandwidth file.[71] DISH then lifted the restraints and observed that the computer returned to requesting the higher bandwidth Variant Manifest.[72] This use of HLS to

---

[67] *See supra*, ¶ 15.
[68] *See, e.g.*, Ex. ZZ ('554 Patent Claims Chart Against Brazzers), App'x 1213.
[69] *See, e.g.*, *id.* at App'x 1215.
[70] *See generally id.*
[71] *See, e.g.*, *id.* at App'x 1237-1239.
[72] *Id.*

perform ABR streaming tracks the claims of the Asserted Patents.

DISH is highly likely to succeed on infringement given the Accused Websites' confirmed use of the HLS protocol in the same manner found to infringe in the ITC Action.

(3) MG Defendants' Non-Infringement Arguments Were Rejected in the ITC Action and Have No Likelihood of Success Here

In its declaratory judgment action against DISH, MG Freesites Ltd argues that its websites, namely Pornhub, do not infringe because they "do[] not request multiple streamlets in a single request."[73] The ITC already rejected a similar defense by the ITC Respondents because the Asserted Patents are not limited to placing a single request.[74,75] Certain claims do not require placing a request for streamlets at all.[76] Other claims make clear that the request is for a single streamlet.[77] Further, this argument ostensibly disregards that claims that require "requesting a plurality of sequential files" could also be met by issuing a single streamlet request for each of the plurality of sequential files, consistent with the intrinsic evidence.[78] Accordingly, whether the MG Defendants place only a single request for multiple streamlets is irrelevant.

c. Induced Infringement

To establish induced infringement under 35 U.S.C. § 271(b), one must show "that the alleged infringer knowingly induced infringement and possessed specific intent to encourage another's infringement." *MEMC Elec. Materials, Inc. v. Mitsubishi Materials Silicon Corp.*, 420 F.3d 1369, 1378 (Fed. Cir. 2005) (internal citations and quotations omitted). Intent can be shown

[73] Ex. DD, at ¶ 50, App'x 0802.
[74] Ex. T, ID, at 45, 121, App'x 0375, 0451.
[75] The Chief ALJ rejected numerous arguments from the ITC Respondents that claim 16 of the '554 Patent was limited to a single processor and required segmenting videos ***before*** the individual segments are encoded, and that HLS does not select or request by quality. Ex. T, ID, at 135-144, App'x 0465, 0476.
[76] *See, e.g.*, Ex. XX ('798 Patent Claim Chart Against Brazzers), App'x 1082-1114.
[77] *See, e.g.*, Ex. BBB ('138 Patent Claim Chart Against Brazzers), App'x 1301-1337.
[78] *See, e.g.*, Ex. YY ('564 Patent Claims Chart Against Brazzers), App'x 1116-1158.

by demonstrating "that [an infringer] knew or should have known his actions would induce actual infringements." *DSU Med. Corn. v. JMS Co*., 471 F.3d 1293, 1306 (Fed. Cir. 2006) (en banc in relevant part) (internal citations and quotations omitted). "Direct evidence is not required; rather, circumstantial will suffice." *Id*. (internal citations and quotations omitted).

The MG Defendants have known about the Asserted Patents at least since DISH's Notice Letter, *supra* ¶ 23, and thereafter knew or were willfully blind to the fact that their actions induced infringement by third-party U.S. customers. This knowledge is sufficient for induced infringement. *See Unwired Planet, LLC v. Apple Inc.*, 829 F.3d 1353, 1364 (Fed. Cir. 2016). The MG Defendants' third-party U.S. customers have directly infringed the Asserted Patents by using the Accused Websites, and the MG Defendants encouraged this infringement in various ways. For example, the MG Defendants induced their customers' direct infringement by supplying them with the Accused Websites and instructing them to use the Accused Websites in a manner that infringes the Asserted Patents.[79] The MG Defendants further provide technical support for U.S. customers for help in infringing by use of the Accused Websites.[80]

It is implausible that the MG Defendants do not know of their U.S. customers' actions in performing the infringement. Indeed, having customers consume content is the very purpose of the Accused Websites. The MG Defendants also specifically target U.S. customers. For example, they successfully obtained a preliminary injunction to stop a Texas law that would impact their services.[81] Further, upon passage of Utah Senate Bill 287, which requires various adult websites

[79] *See, e.g.*, Ex. V, Terms of Service, Brazzers, App'x 0690; Ex. GG, Terms of Service, SpiceVids, 0824; Ex. HH, Terms of Service, FAKETaxi, App'x 0841; Ex. II, Terms of Service, DigitalPlayground, App'x 0848.
[80] *See, e.g.*, Ex. JJ, Technical Support, Brazzers, App'x 0855.
[81] Ex. KK, Plaintiff's Motion for Preliminary Injunction, *Free Speech Coalition v. Colmenero*, No. 23-cv-917, Dkt. 5 (W.D. Tex. Aug. 4, 2023), App'x 0858; Ex. LL, Order Granting Plaintiff's Motion for Preliminary Injunction, *Free Speech Coalition v. Colmenero*, No. 23-cv-917, Dkt. 36 (W.D. Tex. Aug. 4, 2023), App'x 0889.

to verify the adult age of viewers, the MG Defendants instructed Utah residents on the landing page of their websites to contact their representatives to repeal the law.[82] The MG Defendants are well aware of the actions of their customers on their websites.

2. The Asserted Patents are Presumptively Valid

The Asserted Patents are presumed valid under 35 U.S.C. § 282 for purposes of resolving this motion. *See Titan v. Case New Holland*, 566 F.3d 1372, 1377 (Fed. Cir. 2009). The USPTO allowed the Asserted Patents over hundreds of prior art references. Moreover, two of the Asserted Patents underwent a substantial validity challenge in the ITC Action, and their validity again was confirmed.[83]

ii. DISH Will Suffer Irreparable Harm If Injunctive Relief Is Not Granted to Prevent Ongoing Infringement by the MG Defendants.

A likelihood of success on the merits alone may establish irreparable harm "where an infringer and its assets are abroad, and the plaintiff would likely be unable to enforce a money judgment." *HDMI Licensing Adm'r Inc. v. Chunghsin Tech. Grp. Co.*, No. 20-CV-00028, 2020 WL 364121, at *2 (D. Nev. Jan. 21, 2020). The fact that "it may be difficult or impossible to collect on a money judgment because [the defendant] [] is a foreign entity," like the MG Defendants here, "***alone is sufficient to show that [the plaintiff] will likely be irreparably harmed***." *Aevoe Corp. v. Shenzhen Membrane Precise Electron Ltd.*, No. 2:12-CV-00054, 2012 WL 1532308, at *6 (D. Nev. May 1, 2012) (emphasis added).[84]

In this regard, DISH expects the value of any judgment issued against the MG Defendants

[82] Dkt. 1, ¶ 14.
[83] Ex. T, ID, at 217, App'x 0547. Indeed, the ITC Action found that a substantial record of secondary considerations supported non-obviousness. Ex. T, ID, at 211-217, App'x 0541-0547.
[84] *See also, e.g., Hand & Nail Harmony, Inc. v. Guangzhou Cocome Cosmetics Co.*, No. 2:14-cv-01106-RFB-CWH, 2014 WL 4809928 at *7 (D. Nev. Sept. 26 2014); *Cordelia Lighting, Inc. v. Zhejiang Yankon Grp. Co.*, No. 14-cv-881, 2015 WL 12656241, at * 24 (C.D. Cal. Apr. 27, 2015); *Bushnell, Inc. v. Brunton Co.*, 673 F. Supp. 2d 1241, 1263 (D. Kan. 2009).

to be on the order of hundreds of millions of dollars. For example, Peloton licensed the patented ABR technology from DISH for $75 million in May 2023, when it was generating approximately $140.6 million in monthly revenue.[85] The MG Defendants appear to be generating approximately $144.9 million in monthly revenue from just one of their forty-seven known platforms, www.brazzers.com.[86] Thus, assuming comparable damages are appropriate for comparable revenue, damages here could exceed $3.5 billion.[87]

Troublingly, DISH has no way of confirming the location and availability of any assets to collect on any judgment against the MG Defendants, much less the significant judgment expected here.[88] *See XY, LLC v. Trans Ova Genetics, L.C.*, No. 13-cv-00876, 2014 WL 12982679 at *4 (D. Colo. 2014) (considering "(1) the defendant's resources, and (2) the potential magnitude of eventual damages" in deciding whether irreparable harm is likely from inability to pay). Indeed, any efforts to recover these highly likely and substantial damages could prove futile considering the MG Defendants' complex corporate structure and complete lack of U.S. assets.

The MG Defendants have orchestrated a complex web of shell entities, operating out of Cyprus, Ireland, and the Czech Republic, specifically designed to insulate their corporate leadership and profits from liabilities, including liability for patent infringement.[89] According to preliminary findings, the MG Defendants are nestled within an MG empire comprising over 200 entities across foreign jurisdictions, with many of those entities based at the same address in Cyprus.[90] The unfortunate truth is that Cyprus has long been known as a haven for tax evaders,

---

[85] *See* Ex. D, Declaration of Thomas D. Vander Veen, at ¶¶ 15-16, App'x 0042.
[86] *Id.* at ¶¶ 17-32, App'x 0042-0045.
[87] This considers the willful infringement of the at least forty-seven Accused Websites, a conservative floor of $25 per subscriber, and a conservative estimate of 1 million subscriber per Accused Website.
[88] *See generally* Ex. B, ¶¶ 51-60, App'x 0016-0018.
[89] *See supra* ¶¶ 16-21.
[90] *See* Ex. B, ¶ 14, App'x 0010.

DISH TECHNOLOGIES L.L.C., Exhibit 2053, p. 27
Aylo Freesites Ltd. v. Dish Technologies L.L.C., IPR2024-00046

such as Russian oligarchs looking to shelter their assets.[91] Often referred to as "Moscow on the Med,"[92] even the United States government has found tremendous difficulties in its efforts to enforce its sanctions against Russian elites whose assets are parked within well-guarded asset shelters offered in Cyprus.[93] If the United States has had to undertake such substantial efforts in its attempts to enforce its sanctions, then DISH has little hope of recovering monetary damages against the MG Defendants' intricate network of Cyprus-based companies.

The MG Defendants are neither the highest-level parent entities nor the lowest-level subsidiary entities in their respective corporate web of shell entities. Instead, each of the MG Defendants performs discrete tasks, purportedly from its Cyprus address, in furtherance of providing the MG Defendants' infringing websites to American viewers. Take Fake Taxi, an infringing website, for example. According to Fake Taxi's home page and Terms of Service, Yellow Production s.r.o. owns the trademarks and logos used on the website, MG Premium Ltd operates the website, and MG Billing Ltd collects and processes subscription payments for the website.[94] All are needed to provide the infringing content to consumers, while none provide any of the other's tasks. And, like the ultimate parent of all of these entities, MindGeek S.à.r.l.—which is "nothing more than a holding company"—the MG Defendants have no U.S. employees or

[91] *Id.*, ¶¶ 52-53, App'x 0015; Ex. GGG, Cyprus Firm Helped Sanctioned Russian Oligarch Move Funds, Organized Crime and Corruption Project, App'x 1367 (Although Cyprus passed a law in 2016 making the violation of EU and U.N. sanctions punishable by imprisonment and fines … it ***has long had a reputation for lenient enforcement….“Cyprus is very well known as a jurisdiction that's got pretty lax anti-money laundering regulations," Kenyon told OCCRP. "That's why the Russians love it."***).

[92] Ex. HHH, Cyprus Braces For New US and UK Sanctions (greekreporter.com).

[93] Ex. B, ¶¶52-53, App'x 0016; Ex. EEE, App'x 1350. Even after the United States deployed sanctions, it went through tremendous difficulty and efforts to enforce even a fraction of the sanctions, with any recovery touted as an achievement because of the nest of shell entities and trusts available to hide assets.

[94] *See, e.g.*, Ex. HH, App'x 0841.

facilities despite directing a substantial portion of their services to the U.S.[95] Thus, even if DISH were able to locate assets against which to enforce the likely judgment in its favor, DISH would need to go abroad to collect against them.

Recovery of monetary damages from each foreign MG Defendant will be costly, time-consuming, and undoubtedly prejudicial, if at all possible. *First*, assuming DISH or the Court can locate where the liable MG Defendants keep their assets, DISH will have to separately file petitions in Cyprus, Ireland, and the Czech Republic, seeking each MG Defendant's compliance with this Court's judgment. *Second*, recovering a judgment in those countries is not likely to happen for years beyond normal litigation timelines, as the MG Defendants are almost certain to challenge any judgment in DISH's favor, including in the MG Defendants' resident countries.[96] And while each of these countries is a member of the European Union ("EU"), none is obligated to enforce American judgments against resident entities.[97] *Third*, the MG entities have shown a willingness to change their name in the face of adversity, which may further complicate enforcing a judgment against them.[98] *Fourth*, the Asserted Patents will begin expiring in April 2025, such that DISH may lose the advantage of an injunction to enforce its patent rights.

In sum, the MG Defendants are unlikely to satisfy a judgment against them because none have collectible U.S. assets. As such, DISH will continue to suffer irreparable harm from the MG Defendants' continued willful infringement unless they are enjoined now.

---

[95] *See* Ex. K, *Fleites* Andreou Dec., ¶ 6, App'x 0193.

[96] In the Czech Republic, for example, the approximate time required to register and enforce a foreign judgment, if opposed, is two years for non-EU judgments. Ex. NN, *Cross-Border Enforcement Center – Czech Republic — Judgments*, Baker McKenzie, App'x 0994.

[97] *See, e.g.*, Ex. MM *Enforcement of Foreign Judgments - Cyprus*, Latham & Watkins LLP, App'x 0980-0986 (Cypriot courts' have the ability to determine enforceability of non-EU member judgments for non-merits reasons, such as public policy and/or personal jurisdiction).

[98] *See supra* ¶¶ 2; *see also* Ex. N, App'x 0210.

iii. The Balance of Hardships Weighs in Favor of an Injunction.

The balance of hardships entails a relative comparison of the "harm that will occur to the moving party from the denial of the preliminary injunction with the harm that the non-moving party will incur if the injunction is granted." *Hybritech Inc. v. Abbott Lab'ys*, 849 F.2d 1446, 1457 (Fed. Cir. 1988). Without an injunction now, the MG Defendants will be able to continue offering their infringing services throughout the U.S. while DISH has little to no certainty that it will be able to ever collect any judgment against them. In other words, DISH's patent rights will be flagrantly flouted without interruption while DISH is left without an adequate remedy at law.

By contrast, the MG Defendants have several options for maintaining their operations without continued infringement of DISH's patent rights. *First*, the MG Defendants could stop using the ABR patents, as at least one other entity purports to have done.[99] *Second*, the MG Respondents could voluntarily license the ABR patents from DISH, as other entities also have done.[100] Or, *third*, the MG Defendants could simply stipulate to a permanent injunction and consent to further litigation in the event of subsequent infringement.[101] Any harm to the MG Defendants from pursuing these options would be insubstantial, particularly in view of the well-settled edict that "[o]ne who elects to build a business on a product [or service] found to infringe cannot be heard to complain if an injunction against continuing infringement destroys the business." *Windsurfing Int'l, Inc. v. AMF, Inc.*, 782 F.2d 995, 1003 n.12 (Fed. Cir. 1986).

---

[99] Ex. A, ¶ 10, App'x 0004.

[100] Numerous companies, including Univision Communications, Inc., ViacomCBS Inc., Peloton, and lululemon have taken licenses to DISH's ABR patents. *Id.* at ¶¶ 11-13, App'x 0004. DISH's licensing efforts, *see supra* ¶ 23, do not outweigh the need for a preliminary injunction here. *Abbott v. Sandoz, Inc.*, 544 F.3d 1341, 1362 (Fed. Cir. 2008) ("We agree that the fact that a patentee has licensed others under its patent does not mean that unlicensed infringement must also be permitted while the patents are litigated."). To the contrary, DISH has obtained injunctions for companies not willing to license its ABR patents. Ex. A, at ¶¶ 9-10, 13, App'x 0004.

[101] Ex. OO, *DISH Technologies L.L.C. et al. v. Jadoo TV, Inc.*, No. 5-18-CV-05214, Dkt. 97 at ¶¶ 5-7 (N.D. Cal. May 28, 2021) (the "Jadoo Injunction"), App'x 0996.

iv. Public Interest Favors an Injunction.

In considering public interest, courts have typically "acknowledged the importance of the patent system in encouraging innovation." *Sanofi-Sythelabo v. Apotex, Inc.*, 470 F.3d 1368, 1383-84 (Fed. Cir. 2006). Thus, there is significant public interest in protecting DISH's exclusionary rights under its valid patents. Conversely, issuance of a preliminary injunction would not injure any "critical public interest," *see Hybritech*, 849 F.2d at 1458, especially given that the MG Defendants have non-infringing ways of streaming their content.

b. Bond

A trial court may, in its discretion, determine that a bond is unnecessary to secure a preliminary injunction "if there is an absence of proof showing a likelihood of harm." *Coquina Oil Corp. v. Transwestern Pipeline Co.*, 825 F.2d 1461, 1462 (10th Cir. 1987). The Court should dispense with Rule 65(c)'s bond requirement here because the MG Defendants will not be able to prove they are likely to suffer harm given the available alternatives.[102]

c. Entities Bound

Rule 65(d)(2)(C) enjoins "persons who are in active concert or participation" with the parties themselves when those persons have notice of the injunction. "Active concert or participation has been interpreted to include both aiders and abettors of, and privies of, an enjoined party," which "recognize[s] that the objectives of an injunction may be thwarted by the conduct of parties not specifically named in its text." *Aevoe Corp. v. AE Tech Co.*, 727 F.3d 1375, 1384 (Fed. Cir. 2013); *see also Scalia v. Paragon Contractors Corp.*, 796 F. App'x 962, 968 (10th Cir. 2019). Here, all MG Defendants are in active concert and participation in providing at least 47 infringing

[102] The MG Defendants have the burden to prove a likelihood of harm if the injunction were to issue. *See DJ Direct, Inc. v. Margaliot*, 512 F. Supp. 3d 396, 422 (E.D.N.Y. 2021), *appeal withdrawn sub nom. DJ Direct, Inc. v. JCB Max LLC*, 2021 WL 3555968 (2d Cir. Jul. 13, 2021).

websites. Yellow Production, Sonesta Techs, and Sonesta Media provide adult content to the Accused Websites. MG Premium delivers that content to subscribers. And MG Billing and MG Billing Ireland collect the proceeds. Meanwhile, the other MG entities involved in infringement of DISH's patent rights hide behind the intentional murkiness and complexity of MG's corporate structure to such a degree that it is impossible to decipher where one entity ends and another begins. As a result, any injunction against just the named MG Defendants could be effectively nullified, as infringement could continue at the hands of MG entities not specifically named in this suit or injunction order, subjecting DISH to an endless and unfair game of whack-a-mole.

Notwithstanding the foregoing, it is at least clear that the MG Defendants have a corporate relationship and are under common control with numerous other MG entities. For example, Andreas A. Andreou is a Director at both Defendants MG Premium and MG Billing as well as, at least, the parent MindGeek S.à.r.l. Mr. Andreou has represented that he is intimately familiar with MG's corporate structure and deals "[a]lmost every day … with issues involving the corporate structure and operations of the MindGeek corporate entities."[103] As a result, where one MG entity receives actual notice of an injunction for their infringing conduct, all MG entities receive actual notice. An injunction against all MG Defendants, including any unnamed affiliates, is thus necessary under Rule 65(d)(2).

IV. CONCLUSION

For these reasons, DISH requests that the Court enter a preliminary injunction that enjoins the MG Defendants and all others acting in concert with them from infringing, including inducing and/or contributing the infringement of, DISH's Asserted Patents.

Dated: September 13, 2023 Respectfully submitted,

[103] Ex. K, at ¶ 2, App'x 0193.

By: /s/Brent O. Hatch
HATCH LAW GROUP
Brent O. Hatch

G. Hopkins Guy, III (*pro hac vice* to be filed)
hop.guy@bakerbotts.com
1001 Page Mill Road
Building One, Suite 200
Palo Alto, CA 94304
Telephone: 650.739.7510
Facsimile: 650.739.7699

Ali Dhanani (*pro hac vice* to be filed)
ali.dhanani@bakerbotts.com
910 Louisiana St.,
Houston, TX 77002
Telephone: 281.250.2294
Facsimile: 713.229.2808

Kurt Pankratz (*pro hac vice* to be filed)
kurt.pankratz@bakerbotts.com
2001 Ross Ave., Suite 900
Dallas, TX 75201
(214) 953-6584
Telephone: 214.953.6584
Facsimile: 214.661.4584

Attorneys for Plaintiffs