UNITED STATES PATENT AND TRADEMARK OFFICE

BEFORE THE PATENT TRIAL AND APPEAL BOARD

AYLO FREESITES LTD and FUBOTV MEDIA INC.,
Petitioners
v.

DISH TECHNOLOGIES L.L.C.,
Patent Owner

U.S. Patent 10,951,680
Issue Date: March 16, 2021
Title: APPARATUS, SYSTEM, AND METHOD FOR MULTI-BITRATE CONTENT STREAMING

Inter Partes Review No. IPR2024-00046[1]

PETITIONER AYLO FREESITES LTD'S
NOTICE OF CROSS-APPEAL

Mail Stop PATENT BOARD
Patent Trial and Appeal Board
United States Patent and Trademark Office
PO Box 1450
Alexandria, Virginia 22313-1450
Submitted Electronically via PTAB P-TACTS

---

[1] fuboTV Media Inc. filed a petition in IPR2024-00904 and was joined as a petitioner in this proceeding.

Pursuant to 35 U.S.C. §§ 141, 142, and 319, and 37 C.F.R. §§ 90.2-90.3, notice is hereby given that Petitioner Aylo Freesites Ltd ("Aylo") hereby cross-appeals to the United States Court of Appeals for the Federal Circuit from the Final Written Decision of the Patent Trial and Appeal Bord ("Board") entered April 14, 2025 (Paper 60) ("Final Written Decision"), and from all underlying orders, decisions, opinions, and rulings adverse to Aylo in the above captioned matter. Patent Owner DISH Technologies L.L.C. ("DISH") filed a Notice of Appeal in this case on October 7, 2025 (Paper 70).[2] A copy of the Final Written Decision is attached as **Exhibit A**.

In accordance with 37 C.F.R. § 90.2(a)(3)(ii), the expected issues on cross-appeal include, but are not limited to:

1. the Board's determination that Aylo failed to demonstrate by a preponderance of the evidence that claims 7–9, 22–25, and 27 of U.S. Patent 10,951,680 ("the '680 Patent") are unpatentable as obvious over U.S. Patent No. 6,161,137 ("Ogdon") in view of International Patent Publication No. WO 02/075482 ("Allen");

---

[2] DISH's request for Director Review of the Final Written Decision was denied on August 28, 2025 (Paper 67). Aylo's request for Rehearing of the Final Written Decision was denied on October 6, 2025 (Paper 69).

2. the Board's determination that Aylo failed to demonstrate by a preponderance of evidence that claims 7–9, 22–25, and 27 of the '680 Patent are unpatentable as obvious over Ogdon in view of Allen and *Synchronized Multimedia Integration Language 2.0* ("SMIL 2.0"); and

3. the Board's factual findings, conclusions of law, or other determinations supporting or relating to the aforementioned issues, including the Board's application of the applicable burdens of proof and production and its application of the law of obviousness, along with any finding or determination, including, but not limited to, claim construction supporting or related to those issues, and all other issues decided adversely to Aylo in any orders, decisions, opinions, and rulings.

A copy of this Notice of Cross-Appeal is being concurrently filed with the Board. In addition, a copy of this Notice of Cross-Appeal, along with the required docketing fees, are being filed with the Clerk's Office for the United States Court of Appeals for the Federal Circuit.

DATED: October 20, 2025

Respectfully submitted,

By: /Frank M. Gasparo/

Frank M. Gasparo (Reg. No. 44,700)
Attorney for Petitioner
VENABLE LLP
151 W. 42nd Street, 49th Floor
New York, NY 10036
T 212-370-6273
F 212-307-5598
fmgasparo@Venable.com

CERTIFICATE OF FILING

I certify that, in addition to being electronically filed with the Patent and Trial Board, the original version of the foregoing Aylo's Notice of Cross-Appeal was filed by email with the Director of the United States Patent and Trademark Office at efileSO@uspto.gov.

I certify that a true and correct copy of the foregoing Patent Owner's Notice of Cross-Appeal was filed electronically with the Clerk's Office of the United States Court of Appeals for the Federal Circuit on this 20th day of October, 2025.

CERTIFICATE OF SERVICE

I hereby certify that on October 20, 2025 I caused a true and correct copy of the foregoing Aylo's Notice of Cross-Appeal to be served via email to the counsel of record:

Lead Counsel:	Backup Counsel:
Eliot D. Williams (Reg. No. 50,822) BAKER BOTTS L.L.P. 700 K Street, N.W. Washington, D.C. 20001 T: 202.639.1334 F:202.639.1167 eliot.williams@bakerbotts.com DishvMindGeek@BakerBotts.com	G. Hopkins Guy III (Reg. No. 35,866) BAKER BOTTS L.L.P. 1001 Page Mill Road, Bldg. 1, Suite 200 Palo Alto, California 94304-1007 T: 650.739.7500 F: 650.739.7610 hop.guy@bakerbotts.com DishvMindGeek@BakerBotts.com Ali Dhanani (Reg. No. 66,233) BAKER BOTTS L.L.P. 910 Louisiana St. Houston, TX 77002 T: 713.229.1108

	F:713.229.2808 ali.dhanani@bakerbotts.com DishvMindGeek@BakerBotts.com Thomas B. Carter Jr. (Reg. No. 76,040) BAKER BOTTS L.L.P. 910 Louisiana St. Houston, TX 77002 T: 713.229.1505 F: 713.229.7805 thomas.carter@bakerbotts.com DishvMindGeek@BakerBotts.com Andrew Wilson (Reg. No. 74,093) BAKER BOTTS L.L.P. 700 K Street, N.W. Washington, D.C. 20001 T: 202.639.1312 F: 202.508-9336 andrew.wilson@bakerbotts.com DishvMindGeek@BakerBotts.com Jamie R. Lynn (Reg. No. 63,666) BAKER BOTTS L.L.P. 700 K Street, N.W. Washington, D.C. 20001 T: 202.639.7786 F: 202.585.1026 jamie.lynn@bakerbotts.com DishvMindGeek@BakerBotts.com Zacharias E. Shepard (Reg. No. 83,358) BAKER BOTTS L.L.P. 910 Louisiana Street Houston, TX 77002 T: 713.229.6234 F: 713.220.6134 zach.shepard@bakerbotts.com DishvMindGeek@BakerBotts.com

DATED: October 20, 2025

Respectfully submitted,

By: /Frank M. Gasparo/
Frank M. Gasparo (Reg. No. 44,700)
Attorney for Petitioner
VENABLE LLP
151 W. 42nd Street, 49th Floor
New York, NY 10036
T 212-370-6273
F 212-307-5598
fmgasparo@Venable.com

Exhibit A

PUBLIC VERSION

Trials@uspto.gov
Tel: 571-272-7822

Paper 60
Date: April 14, 2025

UNITED STATES PATENT AND TRADEMARK OFFICE

BEFORE THE PATENT TRIAL AND APPEAL BOARD

AYLO FREESITES LTD and FUBOTV MEDIA INC.,
Petitioner,

v.

DISH TECHNOLOGIES L.L.C.,
Patent Owner.

IPR2024-00046[1]
Patent 10,951,680 B2

Before THU A. DANG, MICHELLE N. WORMMEESTER, and JOHN A. HUDALLA, *Administrative Patent Judges.*

DANG, *Administrative Patent Judge*.

JUDGMENT
Final Written Decision
Determining Some Challenged Claims Unpatentable
Striking Certain Evidence and Arguments
Dismissing-in-Part Petitioner's Motion to Exclude
35 U.S.C. § 318(a); 37 C.F.R. §§ 42.23(b), 42.64(c)

---

[1] fuboTV Media Inc., which filed a petition in IPR2024-00904, has been joined as a petitioner in this proceeding.

I. INTRODUCTION

A. Background

In response to a Petition (Paper 1, "Pet.") filed by Aylo Freesites Ltd ("Aylo"), we instituted *inter partes* review of claims 1, 2, 4–12, 14–19, 21–25, and 27–29 (the "challenged claims") of U.S. Patent No. 10,951,680 B2 (Ex. 1001, "the '680 patent"). *See* Paper 8 ("Dec. Inst.").

fuboTV Media Inc. ("fuboTV") subsequently filed a similar petition and motion for joinder in IPR2024-00904. *See* IPR2024-00904, Papers 2, 3. We instituted an *inter partes* review and joined fuboTV as a petitioner to this proceeding in a limited capacity. *See* IPR2024-00904, Paper 7. Henceforth, we refer collectively to Aylo and fuboTV as "Petitioner."

During trial, DISH Technologies L.L.C. ("Patent Owner") filed a Response (Paper 18 ("PO Resp.")), to which Petitioner filed a Reply (Paper 37 ("Pet. Reply")). In turn, Patent Owner filed a Sur-reply. Paper 47 ("PO Sur-reply"). An oral hearing was held with the parties on January 16, 2025. A transcript of the hearing has been entered into the record. Paper 59 ("Tr.").

Petitioner also filed a motion to exclude certain evidence. Paper 49 ("Exclude Mot."). Patent Owner filed an opposition (Paper 50, "Exclude Opp.") and Petitioner filed a reply to the opposition (Paper 51, "Exclude Reply").

We have jurisdiction under 35 U.S.C. § 6. This Decision is a Final Written Decision under 35 U.S.C. § 318(a) as to the patentability of the claims on which we instituted trial. Based on the record before us, Petitioner has shown by a preponderance of the evidence that claims 1, 2, 4–6, 10–12,

14–19, 21, 28, and 29 of the ’680 patent are unpatentable. We also determine that Petitioner has not demonstrated by a preponderance of the evidence that claims 7–9, 22–25, and 27 of the ’680 patent are unpatentable. We additionally strike certain materials in response to Petitioner’s Motion to Exclude. Otherwise, we dismiss-as-moot Petitioner’s Motion to Exclude.

B. Real Parties in Interest

Aylo identifies Aylo Freesites Ltd (f/k/a MG Freesites Ltd), Aylo Premium Ltd (f/k/a MG Premium Ltd), and Aylo Billing Limited (f/k/a MG Billing Limited) as the real parties-in-interest. Pet. 1. fuboTV identifies fuboTV Media Inc. as the real party-in-interest. IPR2024-00904, Paper 2, 1. Patent Owner identifies DISH Technologies L.L.C. and Sling TV L.L.C. (Paper 4, 2), as well as EchoStar Corporation (Paper 7 (Patent Owner’s Updated Mandatory Notices), 2), as the real parties-in-interest.

C. Related Proceedings

The parties indicate that the ’680 patent is the subject of: *DISH Technologies LLC et al. v. MG Premium Limited et al.*, No. 2:23-cv-00552 (D. Utah); *DISH Technologies L.L.C. et al. v. Aylo Freesites Ltd et al.*, No. 2:24-cv-0066 (D. Utah); *DISH Technologies LLC et al. v. WebGroup Czech Republic A.S. et al.*, No. 2:23-cv-00553 (D. Utah); DISH Technologies LLC et al v. Vidgo Inc., No. 2:23-cv-00624 (D. Utah); *DISH Technologies LLC et al v. A Parent Media Co. Inc. et al.*, No. 1:23-cv-01000 (D. Del.); *DISH Technologies LLC et al v. fuboTV Media Inc.*, No. 1:23-cv-00986 (D. Del.); *DISH Technologies LLC v. BritBox, LLC*, No. 1:23-cv-08971 (S.D.N.Y.); and *DISH Technologies L.L.C. v. Yanka Industries, Inc. d/b/a/ MasterClass*, No. 1:23-cv-01305 (D. Del.). Paper 11, 1–2; Paper 7, 2–3.

The parties also reference *inter partes* reviews of the ’680 patent: *Aylo Freesites Ltd f/k/a MG Freesites Ltd v. DISH Technologies L.L.C.*, IPR2024-00516 (Paper 7, 2; Paper 11, 1); *fuboTV Media Inc. f/k/a fuboTV Inc. v. DISH Technologies L.L.C.*, IPR2024-00904 (Paper 12, 1); and *WebGroup Czech Republic, A.S. v. DISH Technologies L.L.C.*, IPR2025-00468 (Paper 56, 1)

Furthermore, Petitioner references an investigation of the International Trade Commission (“ITC”) under 19 U.S.C. § 1337 styled *In the Matter of Certain Fitness Devices, Streaming Components Thereof, and Systems Containing Same*, Inv. No. 337-TA-1265 (ITC instituted May 13, 2021) (“the ITC Investigation”) (Ex. 1009). *See* Pet. 8–11, 58–60. Petitioner states that iFIT, Inc. and Patent Owner were parties to the ITC Investigation, which involved “family members of the ’680 patent.”[2] *Id.* at 8–9.

D. The ’680 Patent

The ’680 patent, titled “Apparatus, System, and Method for Multi-Bitrate Content Streaming,” issued on March 16, 2021. Ex. 1001, codes (45), (54). The application that led to the ’680 patent was filed on May 18, 2022, and claims priority to, *inter alia*, a provisional application that was filed on April 30, 2004. Ex. 1001, codes (22), (60). Petitioner “assumes” a priority date of April 30, 2004 (Pet. 8), and, for purposes of this Decision, we apply April 30, 2004 for determining whether the asserted references qualify as prior art.

[2] Although the ’680 patent was initially asserted in the ITC Investigation, all asserted claims of the ’680 patent were later terminated from the investigation prior to the issuance of any substantive determinations. *See* Ex. 1009, 1–3; Ex. 2005, 4–5.

The ’680 patent relates to adaptive-rate shifting of streaming content over packet switched networks such as the Internet. Ex. 1001, 1:31–34. The ’680 patent recognizes that “[s]treaming offers the advantage of immediate access to the content” (*id.* at 2:1–2), wherein “a need exists for an apparatus, system, and method [that] would offer instantaneous viewing along with the ability for fast forward, rewind, direct seed, and browse multiple streams.” *Id.* at 2:58–63. Accordingly, the ’680 patent addresses a purported need to “utilize multiple connections between a source and destination, requesting varying bitrate streams depending upon network conditions.” *Id.* at 2:64–67.

An illustration of the “system for dynamic rate shifting of streaming content” (*id.* at 4:48–50) is depicted in Figure 1 of the ’680 patent, reproduced below:

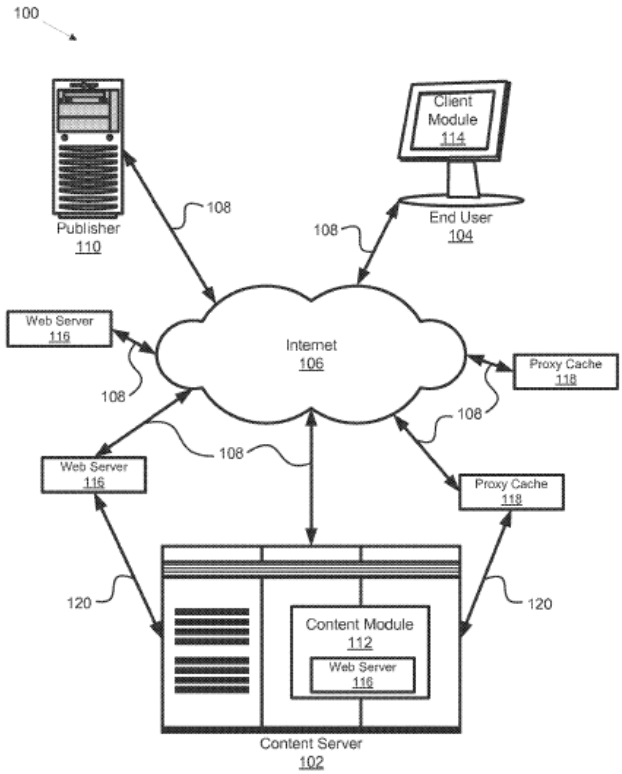

FIG. 1

Figure 1 of the ’680 patent shows system 100 comprising content server 102, end user station 104, publisher 110, and web server 116. *Id.* at 6:36–37, 51–52. Content is transferred over Internet 106 to content server 102, and content from content server 102 may be replicated to other web servers 116. *Id.* at 6:56–57, 7:1–3.

An illustration of “a plurality of streams having varying degrees of quality and bandwidth” (*id.* at 4:53–55) is depicted in Figure 2b of the ’680 patent, reproduced below.

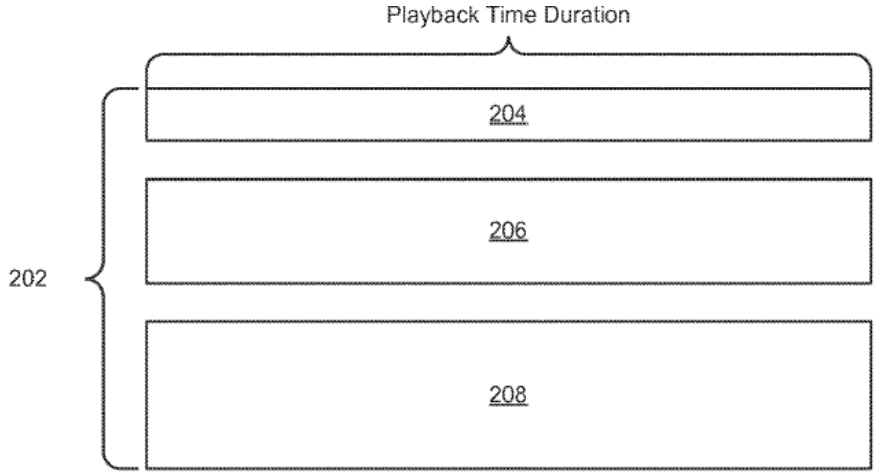

FIG. 2b

Figure 2b shows a plurality of streams 202 comprising low quality stream 204, medium quality stream 206, and high quality stream 208, wherein each of streams 204, 206, 208 is a copy of content file 200 encoded and compressed to varying bit rates. *Id.* at 7:27–31. Content file 200 may comprise uncompressed video and audio, or alternatively, video or audio. *Id.* at 7:17–18.

An illustration of a stream "divided into a plurality of source streamlets" (*id.* at 4:56–58) is depicted in Figure 3a of the '680 patent, reproduced below.

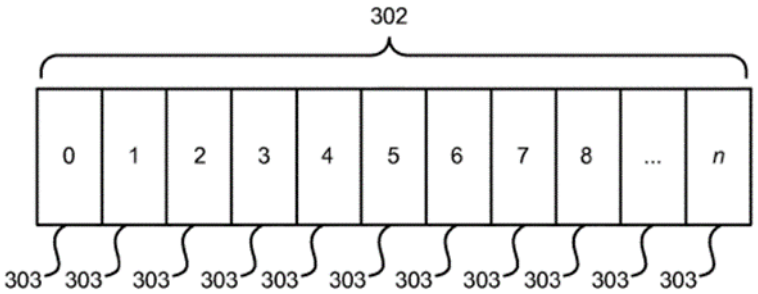

FIG. 3a

Figure 3a shows stream 302 divided into a plurality of source streamlets 303, wherein a "streamlet" is "any sized portion of the content file." *Id.* at 7:37–40.

An illustration of "sets of streamlets" (*id.* at 4:59–61) is depicted in Figure 3b of the '680 patent, reproduced below.

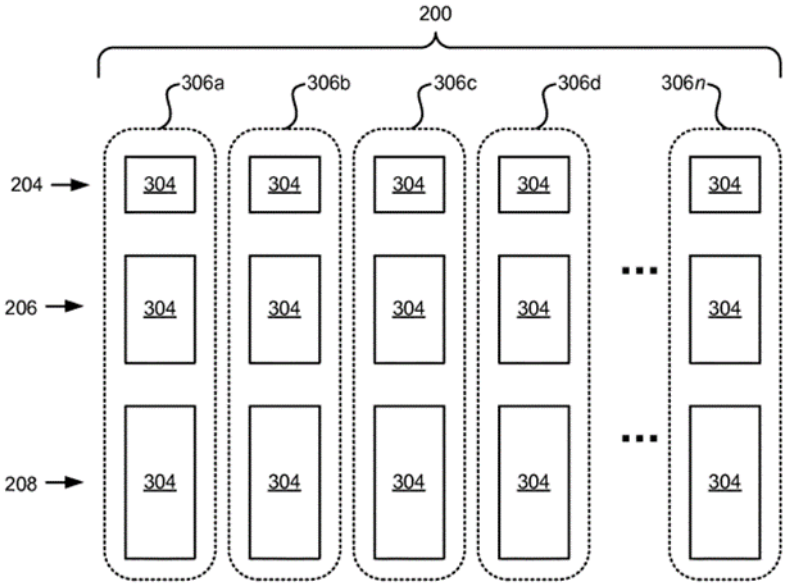

FIG. 3b

Figure 3b shows sets 306 of streamlets, wherein a "set" is a "group of streamlets having identical time indices and durations but varying bitrates." *Id.* at 7:55–59. As shown in Figure 3b, set 306a includes encoded streamlets 304 having "low, medium, and high 204, 206, 208 bitrates." *Id.* at 7:61–62.

E. The Challenged Claims

Of the challenged claims, claims 1, 14, 22, and 28 are the independent claims. Claims 2 and 4–12 depend from claim 1, claims 15–19 and 21 depend from claim 14, claims 23–25 and 27 depend from claim 22, and claim 29 depends from claim 28. Claim 1 is illustrative, and is reproduced below:

> 1. A system for adaptive-rate content streaming of video playable on one or more end user stations over the Internet, the system comprising:
>
> at least one processor executing non-transitory executable instructions for generating at least one virtual timeline corresponding to the video;
>
> wherein the video encoded at a plurality of different bitrates creating a plurality of streams including a low quality stream, a medium quality stream, and a high quality stream, the low quality stream, the medium quality stream, and the high quality stream each comprising a group of streamlets encoded at a respective one of the plurality of different bitrates, each group of streamlets comprises at least first and second streamlets, each of the streamlets corresponding to a portion of the video;
>
> wherein at least one of the low quality stream, the medium quality stream, and the high quality stream is encoded at a bitrate of no less than 600 kbps; and
>
> wherein the first streamlet of each of the groups of streamlets has the same first duration and encodes the same first

> portion of the video in each of the low quality stream, the medium quality stream, and the high quality stream, and wherein the first streamlet of the low quality stream encodes the same first portion of the video at a different bitrate than the first streamlet of the high quality stream and the first streamlet of the medium quality stream.

Ex. 1001, 18:24–51; *see also* Pet. xi–xviii (numbering the claim limitations).

F. Asserted Grounds of Unpatentability

Petitioner challenges the patentability of claims 1, 2, 4–12, 14–19, 21–25, and 27–29 of the '680 patent on the following grounds (Pet. 3):

Claim(s) Challenged	35 U.S.C. §[3]	Reference(s)/Basis
1, 2, 4–12, 14–19, 21–25, 27–29	103	Ogdon,[4] Allen[5]
1, 2, 4–12, 14–19, 21–25, 27–29	103	Ogdon, Allen, SMIL 2.0[6]

Petitioner relies on the declarations of Henry Houh, Ph.D. Ex. 1003 (in support of the Petition); Ex. 1028 (in support of Petitioner's Reply).

---

[3] The Leahy-Smith America Invents Act ("AIA"), Pub. L. No. 112-29, 125 Stat. 284, 287–88 (2011), amended 35 U.S.C. § 103. Because the '680 patent claims priority to applications that were filed before March 16, 2013, the effective date of the relevant amendment, we assume that the pre-AIA version of § 103 applies. However, our decision would be the same under the current version of the statutes.

[4] U.S. Patent No. 6,161,137, issued Dec. 12, 2000, filed Mar. 31, 1998 (Ex. 1004, "Ogdon").

[5] PCT Publication No. WO 02/075482 A2, published Sept. 26, 2002, filed Mar. 15, 2002 (Ex. 1005, "Allen").

[6] *Synchronized Multimedia Integration Language (SMIL 2.0)*, published Aug. 7, 2001 (Ex. 1006, "SMIL 2.0").

Patent Owner relies on the declarations of Kevin Jeffay, Ph.D. (Ex. 2006), and Robert Drew Major (Ex. 2010) in support of the Patent Owner Response. Patent Owner further relies on the declaration of David R. Ericson (Ex. 2090). Patent Owner then deposed Dr. Houh and entered the transcript of the deposition into record. Ex. 2091. Petitioner deposed Dr. Jeffay and entered the transcript of the deposition into record. Ex. 1030. Petitioner also deposed Mr. Ericson, and Patent Owner entered the transcript of the deposition into record. Ex. 2092.

II. ANALYSIS

A. Level of Ordinary Skill in the Art

In determining whether an invention would have been obvious at the time it was made, we consider the level of ordinary skill in the pertinent art at the time of the invention. *Graham v. John Deere Co.*, 383 U.S. 1, 17 (1966). In our analysis, various factors may be considered, including the "type of problems encountered in the art; prior art solutions to those problems; rapidity with which innovations are made; sophistication of the technology; and educational level of active workers in the field." *In re GPAC, Inc.*, 57 F.3d 1573, 1579 (Fed. Cir. 1995) (quotation marks omitted). Furthermore, the prior art itself can reflect the appropriate level of ordinary skill in the art. *Okajima v. Bourdeau*, 261 F.3d 1350, 1355 (Fed. Cir. 2001).

Relying on the declaration of Dr. Houh, Petitioner contends that a person of ordinary skill in the art (POSITA) at the time of the invention of the '680 patent would have had "at least a [bachelor of science] degree in computer science or electrical engineering (or comparable degree) and two years of experience in networking or streaming media, or a [master of science] in computer science or electrical engineering (or comparable

degree)," wherein "[a] higher level of education or specific skill might make up for less experience." Pet. 8 (citing Ex. 1003 ¶ 41). Patent Owner does not contest Petitioner's proposal or offer an alternative. *See generally* PO Resp.

We apply Petitioner's definition of a POSITA at the time of the claimed invention because, based on the record, this proposal is consistent with the '680 patent, the asserted prior art, and is supported by the testimony of Dr. Houh.

B. Claim Construction

We construe each claim "in accordance with the ordinary and customary meaning of such claim as understood by one of ordinary skill in the art and the prosecution history pertaining to the patent." 37 C.F.R. § 42.100(b). Under this standard, claim terms are generally given their plain and ordinary meaning as would have been understood by a person having ordinary skill in the art (POSITA) at the time of the invention and in the context of the entire patent disclosure. *Phillips v. AWH Corp.*, 415 F.3d 1303, 1313 (Fed. Cir. 2005) (en banc).

Petitioner contends that, although "most terms require no construction," "'virtual timeline' may require construction." Pet. 8–9. In particular, Petitioner contends that "virtual timeline" should be construed as "a playlist of entire content files." *Id.* at 9. Patent Owner responds that "virtual timeline" does not require a specific construction because an ordinarily skilled artisan would readily understand the meaning of this term from the plain language of the claims which is consistent with the use of the term in the description of the '680 patent. PO Resp. 10. For purposes of this Decision, we conclude that no claim term requires express interpretation to

resolve the disputed issues before us. *See, e.g.*, *Realtime Data, LLC v. Iancu*, 912 F.3d 1368, 1375 (Fed. Cir. 2019) ("The Board is required to construe 'only those terms . . . that are in controversy, and only to the extent necessary to resolve the controversy.'" (quoting *Vivid Techs., Inc. v. Am. Sci. & Eng'g, Inc.*, 200 F.3d 795, 803 (Fed. Cir. 1999) (holding that "only those terms need to be construed that are in controversy, and only to the extent necessary to resolve the controversy"))); *see also Nidec Motor Corp. v. Zhongshan Broad Ocean Motor Co.*, 868 F.3d 1013, 1017 (Fed. Cir. 2017) (applying *Vivid Techs.* in the context of an *inter partes* review).

C. Obviousness of Claims 1, 2, 4–12, 14–19, 21–25, and 27–29

Petitioner contends that claims 1, 2, 4–12, 14–19, 21–25, and 27–29 of the '680 patent would have been obvious over Ogdon and Allen (Pet. 15–56) (ground 1). Petitioner also contends that claims 1, 2, 4–12, 14–19, 21–25, and 27–29 would have been obvious over Ogdon and Allen in further view of SMIL 2.0 (Pet. 56–58) (ground 2).

In response, Patent Owner disputes Petitioner's contentions. PO Resp. 11–66.

1. Principles of Law

A patent claim is unpatentable under 35 U.S.C. § 103(a) if the differences between the claimed subject matter and the prior art are such that the subject matter, as a whole, would have been obvious at the time the invention was made to a person having ordinary skill in the art to which said subject matter pertains. *KSR Int'l Co. v. Teleflex Inc.*, 550 U.S. 398, 406 (2007). The question of obviousness is resolved on the basis of underlying factual determinations: (1) the scope and content of the prior art; (2) any differences between the claimed subject matter and the prior art; (3) the level

of ordinary skill in the art; and (4) objective evidence of nonobviousness. *Graham*, 383 U.S. at 17–18.

2. Ogdon

Ogdon, titled "Method and System for Providing a Presentation on a Network," issued on December 12, 2000. Ex. 1004, codes (45), (54). Ogdon discloses a "presentation system" for "distributing a performance of a presentation synchronously to a plurality of client nodes on a network" such as the Internet. *Id.* at code (57). The retrieval of presentation data depends upon the transmission characteristics of the network such as data transmission rate. *Id.* For example, if a low transmission data rate is detected at a client node, presentation elements of a reduced size can be retrieved, whereas if a higher transmission rate is detected, presentation elements of a greater size (and corresponding enhanced quality of presentation) can be retrieved. *Id.* According to Ogdon, an aspect of the invention is "to dynamically and adaptively switch between content webservers and/or versions of the presentation according to network transmission characteristics at each client network node" so that "the clients at the client nodes have presented to them simultaneously, synchronously and in real time, corresponding (in content) segments of the presentation." *Id.* at 3:38–44.

Both the video and audio portions of the presentation may be provided solely by the Internet (e.g., TCP/IP ("transmission control protocol/internet protocol") network), "assuming that there is sufficient communication bandwidth to synchronize presentation transmissions to the presentation members." *Id.* at 2:1–12. A version of the presentation may be accessed synchronously from different network server nodes, or different versions of

the presentation may be accessed synchronously from one or more of the network server nodes. *Id.* at 2:13–23. For example, different versions of the same presentation may be accessible from various content webservers, wherein each version may be for a different group of audience members (e.g., Japanese-speaking audience members, or audience members affiliated with a particular organization). *Id.* at 2:30–35.

Each presentation version includes one or more presentation segments that provide different portions of the presentation, wherein "subcollections," each having "one or more segments" are provided as "presentation 'elements' in that each such subcollection is intended to be an indivisible portion of a presentation performance." *Id.* at 2:36–42. Each version of a presentation typically includes a subcollection of segments (i.e., presentation elements) ordered according to their presentation sequence, and "substantially every segment (or subcollections thereof) in one version corresponds with a segment (or subcollections thereof) having the same presentation order, in each of the other versions." *Id.* at 2:43–49. Assuming corresponding segments (or subcollections thereof) in different versions have approximately the same presentation duration, any corresponding alternative segment (or subcollection thereof) from different versions can be presented as a replacement for another such corresponding segment (or subcollection) during the presentation. *Id.* at 2:49–55. Thus, corresponding alternative segments (or subcollections thereof) having substantially different network transmission requirements can be substituted for one another depending on the performance of the communications network. *Id.* at 2:55–61.

Of a set of corresponding segments (subcollections), one segment (subcollection) may be a multimedia presentation element that is a combination of one or more of: audio, images, animation or video, wherein such a multimedia element plays over a set period of time can be as simple as a single image or as complex as a combination of images, audio, animation and video. *Id.* at 2:66–3:8.

An illustration of Ogdon's presentation system is depicted in Figures 1A–1B, reproduced below.

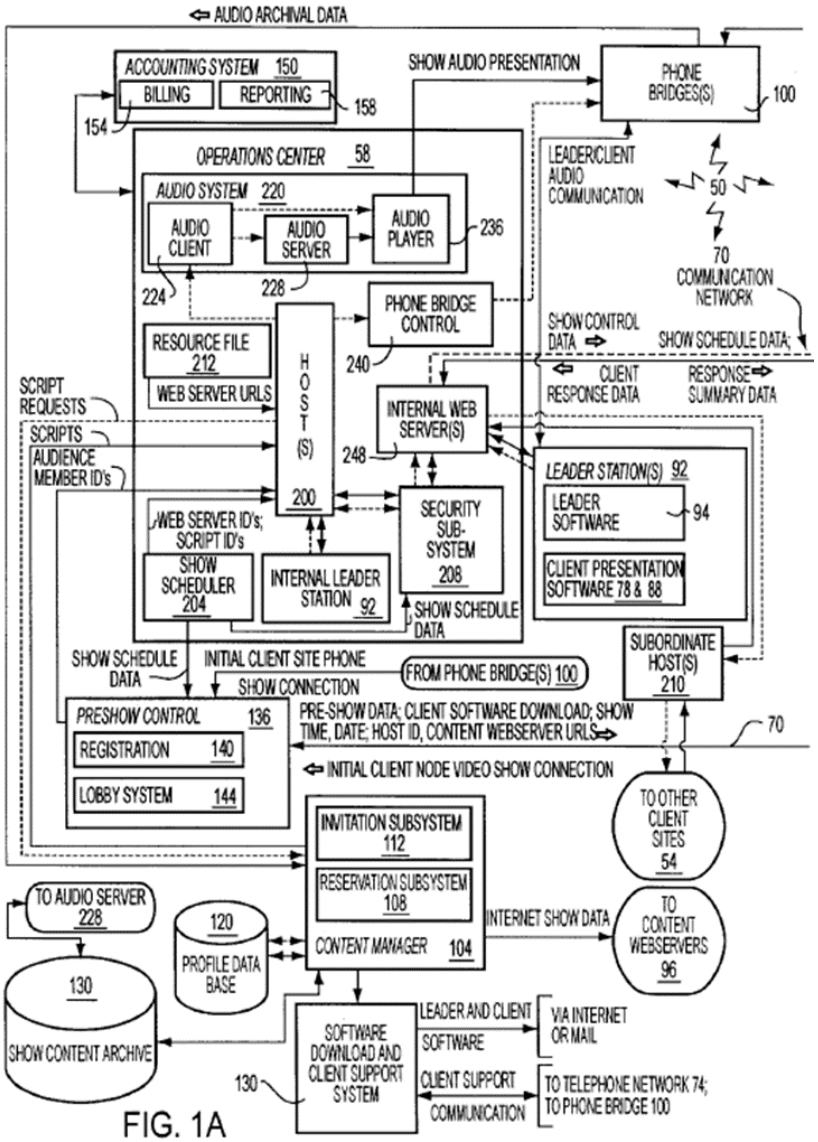

FIG. 1A

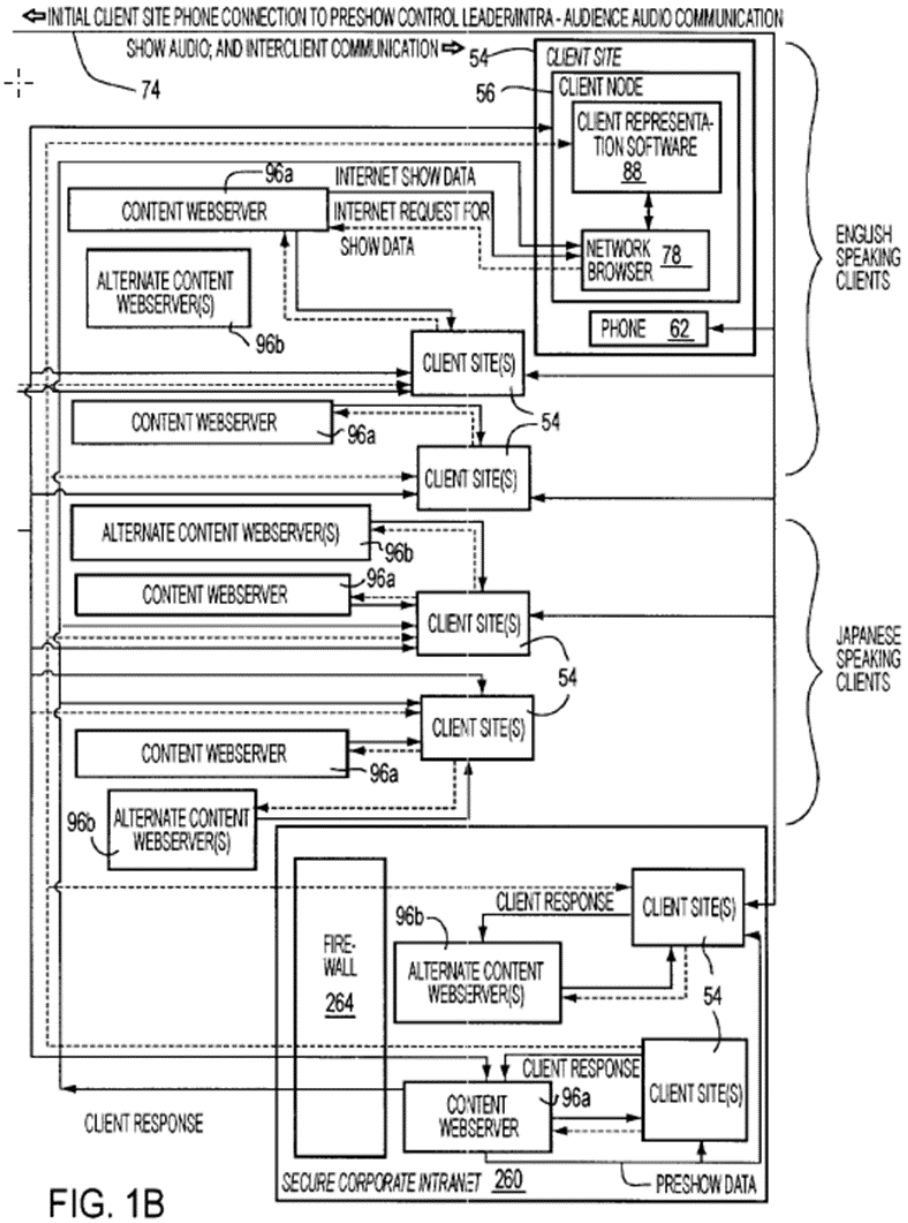

FIG. 1B

Together, Figures 1A and 1B show components of presentation system 50, wherein solid arrows denote presentation data flows and dashed arrows denote control data flows. *Id.* at 7:34–37. At client sites 54, audience members receive a presentation, wherein each client site 54 has at least one of client node 56 (e.g., a personal computer) and telephone 62. *Id.* at 7:40–45. Client node 56 may receive video and audio information from communications network 70 such as the Internet, and phone 62 may be used

for receiving an audio portion of the presentation routed separately through voice grade telephony networks 74. *Id.* at 7:46–51.

Content manager system 104 manages presentation scripts and data, and logs and confirms the locations and addresses of content webservers 96 where the content for each presentation will reside. *Id.* at 9:27–31. Content manager 104 also distributes presentation content (e.g., presentation segments) to content webservers 96. *Id.* at 9:31–32, 9:44–46.

Claim 6 of Ogdon recites "said first subcollection includes video with motion and said second subcollection includes video with one of: (i) reduced motion, and (ii) no motion," and "said first collection is presented to first user at said first client node simultaneously with said second subcollection being presented to a second user at a second client node." *Id.* at 29:44–50.

Claim 9 of Ogdon recites "said first subcollection includes a first video portion, and said second subcollection includes a different second video portion that corresponds in content with said first video portion," wherein "said first and second video portions have substantially different expected data transmission rates for being transmitted to said first client node," and wherein "said first segment selector uses said different expected data transmission rates in selecting one of said first and second subcollections." *Id.* at 30:1–10.

Claim 11 of Ogdon recites "said first and second segment selectors each select, without user selection input, one of said first and second subcollections for simultaneous presenting of a same corresponding portion of the presentation." *Id.* at 30:19–22.

3. Allen

Allen is an international patent application publication titled "System and Method for Distributing Streaming Media," published on September 26, 2002. Ex. 1005, codes (43), (54). Allen relates to "the field of distribution of streaming media" which "allows content producers to produce streaming media in a flexible and scalable manner." *Id.* at 1:17–19. In particular, content producers may "supply the streaming media to multiple simultaneous users through a local facility, in a manner that tailors the delivery stream to the capabilities of the user's system." *Id.* at 1:18–21. In one disclosed example, a content producer produces, pre-processes, and encodes content "in RealSystem, Microsoft Windows Media, and Apple QuickTime formats, and . . . each format is encoded in three different bit rates." *Id.* at 12:1–5.

As a preliminary step to encoding, the digital video must be converted to analog and then redigitized into an appropriate digital format, and the redigitized video is then simultaneously processed in a plurality of encoders, which each provide output in a particular popular format and bit rate. *Id.* at 3:13–18.

4. SMIL 2.0

SMIL 2.0 is a technical specification titled Synchronized Multimedia Integration Language (SMIL 2.0) that is directed to "an XML-based language that allows authors to write interactive multimedia presentations." Ex. 1006, Abstract. The language allows users to "describe the temporal behavior of a multimedia presentation, associate hyperlinks with media objects and describe the layout of the presentation on a screen." *Id.*

Petitioner contends that SMIL 2.0 was publicly accessible on the World Wide Web Consortium's website at least as of November 9, 2001, and, as such, is prior art under at least 35 U.S.C. § 102(b). Pet. 13. In support of its argument, Petitioner provides printouts from the Internet Archive along with a declaration from Nathaniel E. Frank-White, an Internet Archive employee. Ex. 1011. Patent Owner does not contest the prior art status of SMIL 2.0. We determine that SMIL 2.0 qualifies as a prior art printed publication under 35 U.S.C. § 102(b) because SMIL 2.0's public accessibility date of November 9, 2001, is more than one year before the earliest effective filing date of the challenged claims, which is April 30, 2004. Ex. 1001, code (60); Ex. 1011.

5. Analysis

a. Obviousness of Claims over Ogdon and Allen (Ground 1)

We begin by addressing in detail Petitioner's contentions and Patent Owner's arguments with respect to illustrative independent claim 1.

i. Preamble - a system for "adaptive-rate content streaming of video playable on one or more end user station over the Internet" (claim 1)

Petitioner contends that, whether or not the preamble is limiting, Ogdon teaches the preamble. Pet. 15. In particular, Petitioner contends that "Ogdon discloses a system for adaptive-rate content streaming of video (video presentation) that is playable on one or more end user stations (client node(s)) over the Internet." *Id.* at 15–16 (citing Ex. 1004, 3:38–41, 7:40–48, 7:45–63, 8:27–40, 22:10–23, Figs. 1–2; Ex. 1003 ¶ 58). For "adaptive-rate content," Petitioner cites Ogdon's teaching of "dynamically and adaptively

switch[ing] between . . . versions of the presentation according to network transmission characteristics at each client network node." *Id.* at 16 (emphasis omitted) (quoting Ex. 1004, 3:38–41).

Patent Owner contends that "a POSITA would have understood that 'adaptive-rate content streaming' requires the ability to adaptively select among different bitrate versions of content for streaming." PO Resp. 43–44 (citing Ex. 2006 ¶ 134). Pointing to our Decision in IPR2024-00146, Patent Owner contends that, "the Board confirmed that Ogdon does not disclose providing multiple different bitrate versions of the same video," wherein "Ogdon also cannot disclose the ability to adaptively select among different bitrate versions of the same video for streaming." *Id.* at 44 (citing Ex. 2006 ¶ 134; IPR2024-00146, Paper 9, 40). According to Patent Owner, "Ogdon is directed to an ***adaptive content*** system where different ***types*** of content are provided to users," which is "fundamentally different from adaptively adjusting the bitrate of the same video content during streaming, as required by the challenged claim." *Id.* at 44 (citing Ex. 2006 ¶ 135).

Patent Owner further contends that Ogdon teaches away from video streaming. PO Resp. 24–29. That is, "[r]ather than encode the same video at ***different bitrates*** to account for changes in network conditions, Ogdon describes creating entirely ***different content*** 'for a different group of audience members' such as different corporate roles or different network connectivity." *Id.* at 24 (citing Ex. 1004, 2:30–35, 2:43–66, 22:42–47; Ex. 2006 ¶¶ 74–76). According to Patent Owner, "Ogdon's different 'versions' of a presentation are not 'streams.'" *Id.* at 25. Although Patent Owner acknowledges that "Ogdon uses the term 'stream' in its

specification," Patent Owner argues that "it is always for an audio stream—not video," wherein "[a]n 'audio stream' is not a 'video stream.'" *Id.*

In its Reply, Petitioner argues that "Ogdon clearly teaches an adaptive-***rate*** system." Pet. Reply 11 (citing Ex. 1004, 3:38–44; Ex. 1028 ¶¶ 46–47). Although, according to Patent Owner, in IPR2024-00146, the Board confirmed that Ogdon does not disclose providing multiple different bitrate versions of the same video (PO Resp. 43), Petitioner argues that "Ogdon repeatedly teaches that its different video presentation versions are copies of the 'same' presentation and each includes segments that 'correspond' in content and are 'interchangeable' and 'replaceable' with one another." Pet. Reply 5 (citing Ex. 1004, 2:30, 2:49–55, 32:36–38, 2:36–39, 3:39–40, 3:43–44, 21:33–34, 30:21–22, 22:63–64). For example, Petitioner points to Ogdon's claim 9, which "expressly recites 'a first ***video*** portion' and an alternate 'second ***video*** portion that ***corresponds in content*** with said first video portion,'" wherein "the first and second video portions 'have substantially different expected data transmission rates.'" *Id.* at 6 (citing Ex. 1004, claim 9). Although Dr. Jeffay testified in support of Patent Owner that "correspond in content" could be "different in content" where "the second video would be 'a shorter video that has the same message as the video in version 1'" (Ex. 1030, 208:16–209:10), Petitioner contends that Dr. Jeffay's "argument . . . is foreclosed by Ogdon's teachings that the different versions have the same presentation duration and segments that can be replacements of each other." Pet. Reply 6–7 (citing Ex. 1004, 2:49–55).

Petitioner also points to Ogdon's claims 6 and 20 which recite, *inter alia*, "video with motion," and "video with one of: (i) reduced motion, and

(ii) no motion." Pet. Reply 6 n.6; *see also* Ex. 1004, 29:44–46, 32:25–27. According to Petitioner, an ordinarily skilled artisan "would have understood 'reduced' and 'no motion' videos to refer to low and very low frame rate videos." Pet. Reply 6 n.6 (citing Ex. 1028 ¶ 36; Ex. 1030, 293:16–294:1, 136:19–137:24).

Petitioner then contends that Ogdon teaches "video" that is "streamed." Pet. Reply 9–10. In particular, Petitioner contends that, in Ogdon, "both the video and audio portions of the presentation may be provided solely by a TCP/IP network such as the Internet." *Id.* (quoting Ex. 1004, 2:8–12). According to Petitioner, Patent Owner's contention that Ogden teaches away from video streaming "ignores Ogdon's express teaching that video and audio may be transmitted 'solely by a TCP/IP network' when 'there is sufficient communication bandwidth to synchronize presentation transmissions." *Id.* at 10. Petitioner contends that Ogdon teaches that video can be transmitted to clients "in the same manner as audio," wherein "there is no dispute that Ogdon teaches streaming audio." *Id.* (citing Ex. 1004, 2:8–12, 5:16–18, 5:28–36, 7:44–48).

Based on the complete record presented, we are persuaded by Petitioner's contention that Ogdon teaches "adaptive-rate content streaming of video" as recited in the preamble of claim 1.

As an initial matter, we agree with Petitioner that Ogdon discloses adaptive-rate shifting of presentation content that is transmitted over the Internet based on network conditions. Pet. 15–16; *see also*, *e.g.*, Ex. 1004, (57). Although Patent Owner contends that "Ogdon is directed to an *adaptive* content system where different types of content are provided to users" (PO Resp. 44), Ogdon teaches the providing of "[d]ifferent versions

of the same presentation," wherein "any of the corresponding alternative segments (or subcollections thereof) from different versions can be presented as a replacement for another such corresponding segment (or subcollection) during the presentation. *See* Ex. 1004, 2:30–35, 2:49–55. In particular, Ogdon discloses that "it is an aspect of the present invention to dynamically and adaptively switch between content webservers and/or versions of the presentation according to network transmission characteristics at each client network node" so that "the clients at the client nodes have presented to them simultaneously, synchronously and in real time, corresponding (in content) segments of the presentation." *Id.* at 3:38–44. That is, Ogdon's segments having corresponding content are presented simultaneously at the various client nodes. *Id.*

Claim 9 of Ogdon, for example, recites "said second subcollection includes a different second video portion that corresponds in content with said first video portion," wherein "said first and second video portions have substantially different expected data transmission rates for being transmitted to said first client node." Ex. 1004, 30:1–10. That is, the first and second video portions have corresponding content. *Id.* Claim 11 of Ogdon, for example, recites "said first and second segment selectors each select, without user input, one of said first and second subcollections for simultaneously presenting of a same corresponding portion of the presentation." *Id.* at 30:14–22. That is, first and second subcollections present the same corresponding portion. *Id.*

Petitioner's contentions are further supported by Dr. Houh's testimony, for example, which we find persuasive since it is consistent with the teachings in Ogdon. *See* Ex. 1028. In particular, we find persuasive

Dr. Houh's testimony that "Ogdon repeatedly explains that the different versions of a video ***presentation*** are indeed copies of the same video presentation, and that the alternate version segments 'correspond' in content and are 'interchangeable' and 'replaceable' with one another." *See* Ex. 1028 ¶ 31.

As to Patent Owner's pointing to our Decision in IPR2024-00146 to contend that "the Board confirmed that Ogdon does not disclose providing multiple different bitrate versions of the same video," a decision to institute trial is not a final decision as to patentability of any claim. *See TriVascular, Inc. v. Samuels*, 812 F.3d 1056, 1068 (Fed. Cir. 2016) (noting that "there is a significant difference between a petitioner's burden to establish a 'reasonable likelihood of success' at institution, and actually proving invalidity by a preponderance of the evidence at trial"). We base any final decision on the full record developed during trial.

Although Patent Owner contends that Ogdon teaches away from video streaming (PO Resp. 24–29), we are persuaded instead by Petitioner's contention that Ogdon teaches video streaming. Pet. Reply 10. Petitioner's assertion is supported by Dr. Houh's testimony, which we find persuasive. Ex. 1028 ¶¶ 40–45. In particular, Dr. Houh testified that "Ogdon explicitly teaches that streamed segments can be a combination of video and audio" (*id.* ¶ 40), which is supported by the teachings of Ogdon. *See* Ex. 1004, 3:3–8. We find persuasive Dr. Houh's testimony that "Ogdon teaches that video and audio may be transmitted 'solely by a TCP/IP network' when there is sufficient communication bandwidth to synchronize presentation transmissions," and thus, "[t]hat is streaming." Ex. 1028 ¶ 42.

As Petitioner points out, "there is no dispute that Ogdon discloses streaming audio." Pet. Reply 10; *see also* PO Resp. 17. And, as Dr. Houh testified, "Ogdon also teaches that video can be transmitted to clients in the same manner as audio." Ex. 1028 ¶ 42. Dr. Houh's testimony is supported by the teachings of Ogdon. *See* Ex. 1004, 2:8–12 ("both the video and audio portions of the presentation may be provided solely by a TCP/IP network such as the Internet"), 5:16–18 ("both the video and audio portions [of] a presentation may be provided by the Internet"), 5:28–36 ("audience members may simultaneously receive a coordinated sequence of multimedia data . . . in real time at an audience member's browser"), 7:44–48 ("the client node 56 may receive video (and possibly audio as well) information from a communications network 70 such as the Internet")).

Accordingly, regardless of whether the preamble is limiting, based on the complete record presented, we determine that Petitioner has persuasively shown that Ogdon teaches "adaptive-rate content streaming of video playable on one or more end user station over the Internet," as recited in claim 1.[7]

ii. "at least one processor executing non-transitory executable instructions for generating at least one virtual timeline corresponding to the video" (claim 1)

Petitioner contends that "Ogdon discloses a processor executing non-transitory executable instructions (software package)," wherein an ordinarily skilled artisan would have understood that a client node personal computer

[7] Because Petitioner has shown that the recitation in the preamble of claim 1 is satisfied by Ogdon, there is no need to determine whether the preamble in claim 1 is limiting. *See Realtime Data, LLC v. Iancu*, 912 F.3d at 1375.

running software "discloses a processor executing non-transitory executable instructions (software)." Pet. 16–17 (citing Ex. 1004, 7:45, 7:53–63; Ex. 1003 ¶ 60). Petitioner then contends that "Ogdon further teaches generating at least one virtual timeline (playlist) corresponding to the video." *Id.* at 17 (citing Ex. 1003 ¶ 62).

Patent Owner acknowledges that "the term 'virtual timeline' is broad enough to be met by a 'playlist.'" PO Resp. 39. Although Patent Owner then contends that "virtual timelines" as recited in claims 8, 14, 22, and 28 require that a server store the "virtual timeline" for retrieval by a client (and as discussed in detail below with respect to claim 8), Patent Owner provides no argument for "virtual timeline" with respect to claim 1.

Ogdon teaches "client node 56 (*e.g.*, a personal computer)" (Ex. 1004, 7:45), wherein "client node 56" has "a network interface software package required for receiving, *e.g.*, video presentation information" (*id.* at 7:53–63). We determine that Petitioner has persuasively shown that Ogdon teaches "at least one processor executing non-transitory executable instructions," as recited in claim 1.

Ogdon further discloses "ordering of predefined segments (or subcollections thereof) . . . presented and archived, and subsequently represented" such that "sequentially-ordered scripts can be created." Ex. 1004, 3:11–23, 9:27–33. We are persuaded by Petitioner's contention that "Ogdon further teaches generating at least one virtual timeline (playlist) corresponding to the video." Pet. 17 (citing Ex. 1003 ¶ 62). As such, we determine that Petitioner has persuasively shown that Ogdon teaches "non-transitory executable instructions for generating at least one virtual timeline corresponding to the video," as recited in claim 1.

iii. "the video encoded at a plurality of different bitrates creating a plurality of streams including a low quality stream, a medium quality stream, and a high quality stream," the streams "each comprising a group of streamlets encoded at a respective one of the plurality of different bit rates," and "each of the streamlets corresponding to a portion of the video" "at least one of the low quality stream, the medium quality stream, and the high quality stream is encoded at a bitrate of no less than 600 kbps" (claim 1)

Petitioner relies on the combination of Ogdon and Allen for teaching these limitations. Pet. 20–24. Similar to its arguments above in section II(C)(5)(a)(i), Petitioner relies on Ogdon for teaching that "the video (video presentation) is encoded at a plurality of different bitrates (different versions or quality levels) creating a plurality of streams." *Id.* at 20. Petitioner then cites Allen's teaching that "it was known to encode video content into at least three different quality levels (of bitrates) for streaming in order to allow streaming to various clients with different network requirements," including, for example, a "low quality" level (56 kbps), a "medium quality" level (300 kbps), and a "high quality" level (600 kbps). Pet. 21 (citing Ex. 1005, 12:1–5; Ex. 1003 ¶ 70). Petitioner contends that a POSITA "would have been motivated to encode the video presentation of Ogdon, including each segment of the video, into each of a low, medium, and high quality level (bit rate stream)," as taught by Allen, because "providing three different quality levels (low at 56 kbps, medium at 300 kbps, and high at 600 kbps) would enable user client nodes with a wide variety of [network] bandwidth requirements to stream the content," a stated goal of Ogdon. *Id.* at 21–22 (citing Ex. 1004, code (57); Ex. 1003 ¶ 71). According to Petitioner, "both

Ogdon and Allen are drawn to similar systems of client-server based streaming," wherein "simply encoding another copy at an additional quality level would have been a simple and straightforward modification." *Id.* at 22.

Petitioner further contends Ogdon discloses that "each stream (at each corresponding bitrate) comprises a group (elements, collections, or subcollections) of streamlets (segments) encoded at a respective one of the bit rates." Pet. 22 (citing Ex. 1004, 2:43–49 ("each version of a presentation typically has its subcollection of segments (i.e. presentation elements) ordered according to their presentation sequence"), 2:49–55 ("any of the corresponding alternative segments (or subcollections thereof) from different versions can be presented as a replacement for another such corresponding segment (or subcollection) during the presentation"), claim 21 ("said first subcollection is replaceable with said second subcollection"); Ex. 1003 ¶ 66). Thus, Petitioner contends that each of Ogdon's group "comprises at least first and second streamlets (segments)," wherein each of the streamlets (segments) "corresponds to a portion of the video" because Ogdon discloses that "each 'subcollection of segments (*i.e.* presentation elements) [are] ordered according to [a] presentation sequence.'" *Id.* at 23 (citing Ex. 1004, 2:44–45, 3:46–47, claim 21, Fig. 2C (step 508); Ex. 1003 ¶ 73).

Petitioner then references Allen for "encoding the same video at low, medium, and high quality levels." Pet. 23. Petitioner contends that "a POSITA would have been motivated to encode each recorded video segment of Ogdon into each quality level in parallel in real-time prior to storing at the webservers," because a POSITA would have understood this to be "a convenient and practical way to generate different quality levels for each segment in real-time for distribution to client nodes." *Id.* at 23–24 (citing

Ex. 1005, 3:16–18, 5:15–21; Ex. 1003 ¶ 74). According to Petitioner, "Ogdon teaches corresponding segments at different quality levels" and a POSITA "would have known how to encode each raw video segment into a corresponding quality level (bitrate) on a segment-by-segment basis in parallel." *Id.* at 24 (citing Ex. 1003 ¶ 74).

Patent Owner argues that the '680 patent "recites that video 'streams' of different bitrates are divided into time-aligned 'streamlets' of the same video to permit adaption to changing network conditions," whereas "Ogdon describes a fundamentally different approach to this problem that does not involve 'streamlets.'" PO Resp. 13 (citing Ex. 2006 ¶¶ 53–69). According to Patent Owner, Ogdon "purports to overcome the 'drawbacks' of videoconferencing by separating the audio and visual portions of a slideshow presentation from each other" and then "synchronously provid[ing the] audio and video portions of the presentation through different communication channels." *Id.* (citing Ex. 1004, 2:66–3:8, 3:64–4:10).

Although Patent Owner acknowledges that Ogdon divides each audio or video portion "into different 'presentation elements,' or 'segments,' that 'play[] over a set period of time,'" Patent Owner argues that "this results in different users potentially viewing different 'versions' of the presentation with different visual content as network conditions change." PO Resp. 14–15 (citing Ex. 2006 ¶ 19). Patent Owner contends that Ogdon thus "substitutes entirely different content in and out of a presentation when network conditions change, rather than switching between segments of the same video having different qualities but identical content, as required by the challenged claims." *Id.* at 16. That is, according to Patent Owner, "each of Ogdon's 'segments' is a distinct, stand-alone piece of content, like a

PowerPoint slide." *Id.* Patent Owner avers that "[t]he types of content that Ogdon distributes (*e.g.*, images, audio, and video clips) also are entirely inconsistent with the claimed streaming video content," wherein "Ogdon refers only to 'video' as a type of 'multimedia element' that could be included as part of a presentation." *Id.* at 17 (citing Ex. 1004, 2:66–3:8). Thus, according to Patent Owner, "Ogdon's 'segments' are not 'streamlets,' or portions of a stream, because the 'unique (multi)media elements' that make up those 'segments' are not 'video ***streams***,'" and thus are not video "subdivided into time-aligned portions of different bitrates, as recited in the challenged claims." *Id.* at 18–19.

Patent Owner then contends that Petitioner does not rely on Allen to disclose "segmentation" of Ogdon's presentation materials, but rather "relies on Allen only to suggest encoding ***each of Ogdon's 'segments'*** at different bitrates." PO Resp. 19 (citing Pet. 23–24). According to Patent Owner, entirely missing from the Petition's proposed combination of Ogdon and Allen "is any mention of ***further dividing*** the 'raw video segments' of allegedly different quality into smaller portions of ***the same video***." *Id.* at 22 (citing Ex. 2006 ¶ 99). Further, according to Patent Owner, Allen teaches away from dividing a video stream into streams of different rates. *Id.* at 29. In particular, according to Patent Owner, Allen's solution "involves encoding the video at only a ***single bitrate***," and "rather than allowing a client to choose the optimal bitrate for its current network conditions, Allen would have the edge network operator determine a bitrate for its network customers." *Id.* at 31 (citing Ex. 1005, 100:4–10, 104:9–16, 116:6–21; Ex. 2006 ¶ 107). Thus, Patent Owner argues that "Petitioner fails

to articulate a modification to the Ogdon-Allen combination that would meet the 'streamlet' limitation in each of the challenged claims." *Id.* at 22.

In reply, Petitioner points out that the claims "only require the segments to make up a video stream." Pet. Reply 12. Petitioner avers that, contrary to Patent Owner's contention that "'segments' are not 'video ***streams***'" (PO Resp. 18–19), Mr. Major, a named inventor of the '680 patent, testified that "'streamlets' are 'segments,'" wherein "segments, even from different videos, could be arranged to 'make up a larger video presentation.'" Pet. Reply 12 (citing Ex. 1021, 50:11–17, 53:7–11, 51:6–14. 51:15–52:5). Petitioner also contends that Patent Owner's expert, Dr. Jeffay, "admitted that Ogdon 'describes dividing a presentation into different "segments,"'" wherein the '680 patent's architecture similarly includes "using a web server hosting sets of content files where each set represented segments ('streamlets) of a larger media presentation." *Id.* at 13 (quoting Ex. 2006 ¶¶ 35, 46).

Petitioner further argues that Patent Owner's contention that Ogdon's segments are each "unique" standalone pieces of content with no relation between the segments "is incorrect." Pet. Reply 13. According to Petitioner, Ogdon "repeatedly explains that its segments are 'ordered' and collectively make up a large video presentation." *Id.* (citing Ex. 1004, 3:11–14, 3:46–50, 18:42–43; Ex. 1028 ¶¶ 50–52).

Thus, according to Petitioner, "because Ogdon is already a client-pull adaptive-rate video streaming system," modification of Ogdon by Allen "simply encodes three segmented versions of the same video presentation stream," as "well-known to a POSITA." Pet. Reply 16. Petitioner contends

that this combination "would not render Ogdon unsuitable for its intended purposes," as Patent Owner alleges. *Id.*

Petitioner then contends that Patent Owner mischaracterizes Allen when it asserts that "Allen teaches only 'a single-bitrate approach.'" Pet. Reply 18 (citing PO Resp. 30–32). Petitioner contends that "Allen's system still encodes a video into multiple streams and bitrates but moves the encoding process to the 'edge' servers closest to users." *Id.* (citing Ex. 1005, 24:19–25:23). Petitioner points out that Dr. Jeffay acknowledges that, in Allen, unless every viewer has identical devices and network bandwidth, "which is extremely unlikely," "you would end up with streams that are in different formats and bit rates." *Id.* (citing Ex. 1030, 239:20–22).

Based on the complete record, we are persuaded that the proposed combination of Ogdon and Allen would yield these limitations. Although Patent Owner contends that Ogdon does not teach video streaming because it separates the audio and visual portions of a slideshow presentation from each other and then providing the separated portions through different communication channels (PO Resp. 13), as Petitioner points out, the '680 patent also teaches that video can be streamed separately from audio. Pet. Reply 9; *see also* Ex. 1001, 7:17–18 ("The content file 200 may comprise . . . video or audio"). As we discussed above in section II(C)(5)(a)(i), we are persuaded by Dr. Houh's testimony that "Ogdon also teaches that video can be transmitted to clients in the same manner as audio." Ex. 1028 ¶ 42. Dr. Houh's testimony is supported by Ogdon, which teaches that "both the video and audio portions of the presentation may be provided solely by a TCP/IP network such as the Internet," when there is sufficient communication bandwidth to synchronize presentation transmissions.

Ex. 1004, 2:8–12. As Dr. Houh testified, "[t]hat is streaming." Ex. 1028 ¶ 42. And Patent Owner does not dispute that Ogdon discloses audio streaming. *See* PO Resp. 25 ("Ogdon uses the term 'stream' in its specification").

We are also not persuaded by Patent Owner's contention that Ogdon "results in different users potentially viewing different 'versions' of the presentation with different visual content as network conditions change," and thus, Ogdon "substitutes entirely different content in and out of a presentation when network conditions change, rather than switching between segments of the same video having different qualities but identical content." PO Resp. 15–16. As Petitioner points out, for example, claim 9 of Ogdon expressly recites "a first video portion" and an alternate "second video portion that corresponds in content with said first video portion"; and the first and second video portions "have substantially different expected data transmission rates." *See* Ex. 1004, 30:1–10. We are persuaded by Petitioner's contention that Ogdon substitutes video portions of the same, corresponding content.

We are also persuaded by Dr. Houh's testimony that a POSITA would have combined Allen with Ogdon to enable streaming video presentations for a variety of different available bandwidths. Ex. 1003 ¶ 70; *see also* Ex. 1004, code (57). In particular, Ogdon's teaching of retrieving alternatively sized presentations based on transmission data rates supports Petitioner's proposed combination with Allen's teaching of encoding video at different bitrates. *See* Ex. 1004, code (57) (stating that a greater-sized presentation for a "higher transmission rate" has "corresponding enhanced quality of presentation" compared to a reduced-sized version for a "low

transmission data rate"), 22:42–47 (stating that "as the expected amount of time for retrieving one or more presentation elements lengthens, . . . better presentation quality presentation elements may be retrieved (e.g., the presentation quality may be enhanced from limited or no animation to full animation)"). We agree that an ordinarily skilled artisan reasonably would have expected success in making the proposed combination, particularly given that Ogdon already contemplates alternative presentations for different transmission rates. *See*, *e.g.*, Ex. 1004, code (57); *see also* Ex. 1003 ¶ 71.

Here, Ogdon teaches providing different quality versions of a presentation, including a video presentation. *See*, *e.g.*, Ex. 1004, 2:8–10, 2:30–66, 13:47–49, 22:44–47, 24:55. Furthermore, Ogdon teaches that "each version of a presentation typically has its subcollections of segments (i.e., presentation elements) ordered according to their presentation sequence." *Id.* at 2:43–45. And Allen expressly teaches encoding the same content at various bitrates such as 56 kbps, 300 kbps, and 600 kbps. *See* Ex. 1005, 12:1–5.

We are persuaded by Dr. Houh's testimony that it would have been obvious to encode a video presentation into low, medium, and high quality streams. *See* Ex. 1003 ¶ 68. That is, we find persuasive Dr. Houh's testimony that a POSITA would have been motivated, in view of Allen, to encode Ogdon's video segments at various quality levels in parallel in real-time with a reasonable expectation of success. *Id.* ¶ 74. Dr. Houh's testimony is supported by Allen's teaching of a plurality of encoders simultaneously processing video to provide output "in a particular popular format and bit rate." *See* Ex. 1005, 3:16–18.

Based on the complete record presented, we find that Petitioner has persuasively shown that the proposed combination of Ogdon and Allen teaches "video encoded at a plurality of different bitrates creating a plurality of streams including a low quality stream, a medium quality stream, and a high quality stream," wherein at least one of the streams "is encoded at a bitrate of no less than 600 kbps," as recited in claim 1. In addition, we are persuaded that Petitioner's proffered reasoning for combining Ogdon and Allen supports the legal conclusion of obviousness.

We are also persuaded that, in the proposed combination, Ogdon's presentation segments teach the recited "streamlets," and that a collection or subcollection of presentation segments teaches the recited "group of streamlets." *See, e.g.*, Ex. 1004, 2:43–55, 3:46–47, Fig. 2C, claim 21. Here, Ogdon's presentation segments comprise video (*see, e.g.*, Ex. 1004, Fig. 2C (step 508 describing a "next collection of one or more (video) segments")). Further, Ogdon teaches that "each version of a presentation typically has its subcollections of segments (i.e., presentation elements) ordered according to their presentation sequence" (Ex. 1004, 2:43–45), which supports that each of Ogdon's video segments corresponds to a portion of the video. *See* Ex. 1003 ¶ 73. In addition, the inventor, Mr. Major, acknowledged during his testimony that "streamlets" and "segments" can be used interchangeably, wherein "streamlets" is a word that another inventor "came up with." *See* Ex. 1021, 50:11–21 (testifying that he "will call them sometimes video chunks or video streamlets or video segments" and that "streamlets" is a word that "Mark Hurst came up with."), 53:7–11 ("Q. So – your invention, … you're creating video streamlets or segments, which are the same thing,

right? A. Yeah."). This also supports Petitioner's mapping of the claimed "streamlets" to Ogdon's segments.

Although Ogdon's system optionally allows a presentation leader to reorder or change a presentation, Ogdon also teaches that segments are ordered "according to their presentation sequence." Ex. 1004, 2:43–49. We are persuaded by Petitioner's contention that Ogdon's contents "are 'ordered' and collectively make up a large video presentation," and thus, each segment corresponds to a portion of the presentation. Pet. Reply 13 (citing Ex. 1004, 3:11–14, 3:46–50, 18:42–43; Ex. 1028 ¶¶ 50–52). Based on the complete record presented, we determine that Petitioner has persuasively shown that the proposed combination of Ogdon and Allen also teaches a plurality of streams, wherein "each comprising a group of streamlets encoded at a respective one of the plurality of different bit rates," and "each of the streamlets corresponding to a portion of the video [content]," as recited in claim 1.

iv. "the first streamlet of each of the groups of streamlets has the same first duration and encodes the same first temporal portion of the digital content in each of the low quality stream, the medium quality stream, and the high quality stream" "the first streamlet of the low quality stream encodes the same first temporal portion of the digital content at a different bit rate than the first streamlet of the high quality stream and the first streamlet of the medium quality stream" (claim 1)

Petitioner relies on the combination of Ogdon and Allen for teaching this limitation. Pet. 24–27. In particular, Petitioner contends Ogdon discloses that "corresponding segments (or subcollections thereof) in

different versions have approximately the same presentation duration" and that "any of the corresponding **alternative segments (or subcollections thereof) from different versions** can be presented as a **replacement** for another such corresponding segment (or subcollection) during the presentation." *Id.* at 25 (quoting Ex. 1004, 2:49–55). Petitioner contends that a POSITA "would have understood this teaching of 'approximately the same' duration not to be limited to only durations that are close but not exactly the same, but rather encompassing durations that are either the same, or approximately the same." *Id.* at 25–26 (citing Ex. 1003 ¶ 78). Petitioner then contends that a POSITA "would have been motivated to encode each segment of Ogdon into each corresponding quality level bitrate in real-time—which would generate corresponding segments of equal duration." *Id.* at 26 (citing Ex. 1003 ¶¶ 78–80).

Patent Owner repeats its argument that Ogdon's different "versions" of "segments" are "different types of content altogether." PO Resp. 35. According to Patent Owner, Ogdon's "different types of content" are "*e.g.*, a video versus a single image—that, by their very nature, have different lengths (or no length whatsoever)." *Id.* (citing Ex. 2006 ¶ 114). Patent Owner then argues that Ogdon "discusses that its 'segments' are only '***approximately*** the same presentation duration,' and even then, this is only an 'assum[ption]' Ogdon makes in discussing a possible use of its approach." *Id.* at 36 (citing Ex. 1004, 2:49–55). Thus, Patent Owner contends that Ogdon's reference "segments" "does not map to the 'streamlets' of the 'same [] duration' or 'equal play back duration' recited in the challenged claims." *Id.* at 37 (citing Ex. 2006 ¶ 121).

In reply, Petitioner contends that Patent Owner's argument that Ogdon discloses single image "PowerPoint slides" ignores Ogdon's teaching that an 'element' can be any 'combination of one or more of . . . audio, images, animation or *video*, wherein such a multimedia element plays over a set period of time.'" Pet. Reply 13–14 (citing Ex. 1004, 2:66–3:6). Regarding Patent Owner's argument that Ogdon's disclosure of "*approximately* the same" duration does not teach the same duration (PO Resp. 36–37), Petitioner contends that "[m]odifiers like 'approximately,' 'about,' and 'substantially' are frequently used in patents to include 'exactly' and nearly.'" Pet. Reply 14 (citing *Halliburton Servs. v. Smith Int'l, Inc.*, 2004 WL 305722, at *6 (E.D. Tex. 2004) ("approximately the same" means "nearly or exactly the same"); *Janssen Pharms., Inc. v. Tolmar, Inc.*, 2024 WL 834762, at *10 (D. Del. 2024) ("'approximately once a month' as used in the specification . . . mean[s] that once a month is the ideal timing").

Based on the complete record before us, we find that Ogdon in view of Allen teaches the "same first duration" limitation of claim 1. Although Patent Owner argues "video versus a single image" (PO Resp. 35), as Petitioner points out, Ogdon's segments "can be any 'combination of one or more of . . . audio, images, animation or video, wherein such a multimedia element plays over a set *period* of time.'" Pet. Reply 13–14; *see* Ex. 1004, 2:66–3:6. And, Ogdon teaches that corresponding segments have "approximately the same presentation duration" and can be replacements for one another. *See* Ex. 1004, 2:49–55. As discussed above in II(C)(5)(a)(i), Ogdon teaches that corresponding alternative segments from different versions can be a replacement for another such corresponding segment during the presentation. *See id.* at 2:30–35, 2:49–55. That is, Ogdon aims to

switch between versions of a presentation so that "corresponding (in content) segments of the presentation" are presented simultaneously in real time. *Id.* at 3:38–44. We are persuaded by Petitioner's contention, supported by Dr. Houh's testimony, that a POSITA considering such teachings in Ogdon would have known to make the replacing segments the same duration. *See, e.g.*, Ex. 1003 ¶¶ 78–80. As Mr. Major, an inventor of the '680 patent, testified, even he uses "substantially the same" to mean "precisely the same" or "almost the same." Ex. 1021, 96:6–9 ("Q . . . So when you say, 'Substantially the same duration,' you mean precisely the same duration or almost the same duration? A Yeah.").

The meaning of the word "approximately," much like the meaning of the word "about," depends on "the technological facts of the particular case." *See Cohesive Techs., Inc. v. Waters Corp.*, 543 F.3d 1351, 1368 (Fed. Cir. 2008) (discussing the meaning of "about"). Here, we are persuaded by Petitioner contention, which is supported by Dr. Houh's testimony, that a POSITA "would have understood this teaching of 'approximately the same presentation duration' . . . encompass[es] durations that are either the same, or approximately the same." Pet. 25–26; Ex. 1003 ¶ 78; *see also Janssen Pharm. v. Tolmar*, 718 F. Supp. 3d 394, 416 (D. Del. 2024) ("[A]n ordinary artisan would understand the term 'approximately once a month,' . . . to mean that once a month is the ideal timing . . . , but that some deviation . . . is permissible.")

Based on the complete record presented, we determine that Petitioner has persuasively shown that the proposed combination of Ogdon and Allen teaches "the first streamlet of each of the groups of streamlets has the same first duration and encodes the same first temporal portion of the digital

content in each of the low quality stream, the medium quality stream, and the high quality stream," wherein "the first streamlet of the low quality stream encodes the same first portion of the video at a different bitrate than the first streamlet of the high quality stream and the first streamlet of the medium quality stream," as recited in claim 1.

v. Patent Owner's arguments against the combination

Patent Owner argues that Allen teaches away from dividing a video stream into streams of different bitrates. PO Resp. 29–32; PO Sur reply 17–18. According to Patent Owner, Allen's background section disparages the use of multiple bitrates. PO Resp. 30 (citing Ex. 1005, 4:8–25, 5:1–3, 6:3–20, 9:12–10:8, 13:5–8, 116:13); PO Sur reply 17–18 (similar argument). Patent Owner also argues that Petitioner's proposed combination changes Ogdon's principle of operation "by reverting Ogdon's non-streaming solution back into a video streaming solution—the exact thing Ogdon sought to avoid." PO Resp. 32 (citing Ex. 2006 ¶ 110).

However, contrary to Patent Owner's contention that Ogdon "sought to avoid" video streaming, as discussed above, we find that Ogdon teaches video streaming. *See* above section II(C)(5)(a)(i). As such, Petitioner's proposed combination is supported by Ogdon's teachings of adaptively switching between presentation versions, including versions of a streamed video, based on transmission characteristics. *See*, *e.g.*, Ex. 1004, 2:8–12, 3:38–44, 30:1–10. Further, Allen teaches formatting a video at three different bitrates. *See* Ex. 1005, 12:1–5. The fact that this teaching appears in a background section does not detract from Allen's usefulness in the proposed combination because we must consider Allen "for everything it *teaches* by way of technology," which is "not limited to the particular

invention it is describing and attempting to protect." *EWP Corp. v. Reliance Universal Inc.*, 755 F.2d 898, 907 (Fed. Cir. 1985). We find that neither Ogdon nor Allen teaches away from the proposed combination.

We are persuaded by Dr. Houh's testimony that an ordinarily skilled artisan would have combined Allen with Ogdon to enable streaming video presentations for a variety of different available bandwidths. Ex. 1003 ¶¶ 70–71; *see also id.* ¶ 74 (Dr. Houh testifying that, in light of Allen, an ordinarily skilled artisan "would have been motivated to encode each recorded video segment of Ogdon into each quality level in parallel in real-time"). In particular, Ogdon's teaching of retrieving alternatively sized presentations based on transmission data rates corresponds with Allen's teaching of encoding video at different bitrates. *See* Ex. 1004, code (57). We agree with Petitioner that an ordinarily skilled artisan reasonably would have expected success in making the proposed combination, particularly given that Ogdon already contemplates alternative presentations and versions for different transmission rates. *See*, *e.g.*, Ex. 1003 ¶¶ 70, 72; Ex. 1004, code (57).

Patent Owner then argues that, although Petitioner's expert testified that an ordinarily killed artisan would have been motivated to modify Ogdon to create equal duration alternative segments (Ex. 2009, 211:4–213:22), this is hindsight-based reasoning" and is "improper." PO Resp. 38–39. However, such argument ignores Ogdon's own teaching that corresponding segments have "approximately the same presentation duration" and can be replacements for one another. *See* Ex. 1004, 2:49–55. That is, Ogdon expressly teaches switching between versions of a presentation so that "corresponding (in content) segments of the presentation" are presented

simultaneously in real time. *Id.* at 3:38–44. We are persuaded by Petitioner's contention, supported by Dr. Houh's testimony, that an ordinarily skilled artisan considering such teachings in Ogdon without the benefit of hindsight would have known to make the replacing segments the same duration. *See*, *e.g.*, Ex. 1003 ¶¶ 72–75.

vi. Secondary Considerations of Nonobviousness

"[E]vidence rising out of the so-called 'secondary considerations' must always when present be considered en route to a determination of obviousness." *Transocean Offshore Deepwater Drilling, Inc. v. Maersk Drilling USA, Inc.*, 699 F.3d 1340, 1349 (Fed. Cir. 2012) (quoting *Stratoflex, Inc. v. Aeroquip Corp.*, 713 F.2d 1530, 1538 (Fed. Cir. 1983)). "For objective evidence of secondary considerations to be accorded substantial weight, its proponent must establish a nexus between the evidence and the merits of the claimed invention." *In re Huai-Hung Kao*, 639 F.3d 1057, 1068 (Fed. Cir. 2011) (quoting *Wyers v. Master Lock Co.*, 616 F.3d 1231, 1246 (Fed. Cir. 2010)).

Patent Owner cites evidence of secondary considerations related to the MOVE Media Player, a product of MOVE Networks, Inc. ("MOVE Networks") that it claims preclude obviousness.[8] PO Resp. 52–65; PO Sur-reply 21–28. In particular, Patent Owner contends that the MOVE Media player embodied the adaptive-bitrate ("ABR") technology of the challenged claims. PO Resp. 52. According to Patent Owner, the ITC found that some of the same evidence of secondary considerations supported a

[8] According to Patent Owner, in 2010, one of Patent Owner's subsidiaries acquired MOVE Networks, including the challenged patent. PO Resp. 53 (citing Ex. 2080; Ex. 2010).

finding of nonobviousness.[9] *Id.* at 65–66 (citing Ex. 1009, 213–17; Ex. 2005, 2 (Commission adopting ALJ findings)); PO Sur-reply 21.

Petitioner argues that there is no nexus between the challenged claims and Patent Owner's asserted secondary considerations. Pet. Reply 22–24. Further, according to Petitioner, even if there were a nexus, Patent Owner's evidence of secondary considerations does not overcome Petitioner's "strong primary facie case" of obviousness. *Id.* at 24–26.

(1) Nexus

A patent owner is entitled to a presumption of nexus when it shows that the asserted objective evidence is tied to a specific product that "embodies the claimed features, and is coextensive with them." *Brown & Williamson Tobacco Corp. v. Philip Morris, Inc.*, 229 F.3d 1120, 1130 (Fed. Cir. 2000). A patent owner is further "afforded an opportunity to prove nexus by showing that the evidence of secondary considerations is the direct result of the unique characteristics of the claimed invention." *Fox Factory, Inc. v. SRAM, LLC*, 944 F.3d 1366, 1373–74 (Fed. Cir. 2019) (internal quotation omitted).

Patent Owner contends that "MOVE's contemporaneous documents show that the MOVE Media Player practiced the challenged claims." PO Resp. 53 (citing, *inter alia*, Exs. 2011, 2012). In support of this contention,

---

[9] We note that the ITC's finding of a presumption of nexus was premised on the Respondents' concession about an invalidating public use of the MOVE Media Player in 2005. Ex. 1009, 212–13. In contrast, the instant record includes no such concession. On this record, we have no way of knowing what other similarities and differences exist between the records of the ITC Investigation and the instant case. Accordingly, we form our own opinion about the evidence presented in this case, as discussed below.

Patent Owner cites Dr. Jeffay's testimony, which allegedly shows that the MOVE Media Player "practices each limitation of the challenged claims on an element-by-element basis and that the player is co-extensive with the claimed invention." *Id.* (citing Ex. 2006 ¶¶ 165–189). As part of that testimony, Dr. Jeffay provides a claim chart analyzing the MOVE Media Player that is keyed to claim 1 of the '680 patent.[10] *See* Ex. 2062 (claim chart). Based on this analysis, Patent Owner argues that it is entitled to a presumption of nexus.[11] PO Resp. 54; PO Sur-reply 21. Patent Owner also contends that certain secondary considerations related to the MOVE Media Player are directly linked to claimed features. PO Resp. 53–54; PO Sur-reply 26.

Petitioner disputes that Patent Owner is entitled to a presumption of nexus. Pet. Reply 22–24. In particular, Petitioner cites one of the same nexus documents from Patent Owner as stating that the "secret" of the MOVE Media Player is the use of multiple parallel TCP connections for

---

[10] We consider Patent Owner's evidence of secondary considerations relative to all of the challenged claims even though Patent Owner has only put forth a "representative claim chart" comparing the MOVE Media Player with claim 1 of the '680 patent. Ex. 2062.

[11] Patent Owner also makes tangential references to "Sling TV" in its arguments in favor of a presumption of nexus. *See* PO Resp. 54; PO Sur-reply 21. However, Patent Owner never develops any basis for its alleging such a presumption relative to Sling TV. At best, Patent Owner cites the ITC Investigation. *See* PO Resp. 54 (citing Ex. 1009, 112–13, 133, 151–52, 165–66). We decline to credit the ITC Investigation in the absence of any developed argument in Patent Owner's papers relative to Sling TV. This also is the epitome of improper incorporation by reference. *See* 37 C.F.R. § 42.6(a)(3). Furthermore, we note that Patent Owner's evidence of secondary considerations is tied almost exclusively to the MOVE Media Player.

requesting streamlets in parallel. *Id.* at 22 (quoting Ex. 2011, 4; citing Ex. 2059, 11). Petitioner characterizes this as a "critical unclaimed feature" that undermines Patent Owner's evidence of nexus. *Id.* at 22–23. Petitioner further contends that the MOVE player includes other critical unclaimed features, such as the use of HTTP and standard web servers. *Id.* at 23 (citing Ex. 2012, 22; Ex. 2062, 3). Petitioner then contends that Patent Owner's "brief conclusory arguments" on direct nexus are based on features that "were already in the prior art." *Id.* at 24 (citing PO Resp. 53–54; *Kao*, 639 F.3d at 1069).

As to Patent Owner's primary argument on nexus, *i.e.*, that it is entitled to a presumption of nexus, Patent Owner cites, *inter alia*, a document titled "Overview of MoveNetwork's Streaming Media Technology" at Exhibit 2011 as evidence that the MOVE Media Player practices the challenged claims. *See* PO Resp. 53. Dr. Jeffay also cites this document in support of his analysis that the MOVE Media Player embodies the claimed invention. *See* Ex. 2006 ¶¶ 163, 165–167, 169–171, 173–175. However, as Petitioner points out (Pet. Reply 22), the same document states that the "secret" of MOVE's technology "lies in [its] use of multiple TCP connections between the client and the origin web server," in contrast to "[o]ther streaming solutions [that] use a single connection." Ex. 2011, 6; *see also* Ex. 2059, 11 (similar statement in another MOVE document). We agree with Petitioner (Pet. Reply 22) that the plain language of this document—which Patent Owner itself put forth as evidence of nexus—indicates that using multiple TCP connections is a critical unclaimed feature of the MOVE Media Player. As Patent Owner's declarant and named inventor, Mr. Major testified, the use of multiple parallel TCP connections

was "important" and "was something that improves it significantly." Ex. 1021, 75:24–76:4).

Petitioner points out that the use of multiple parallel TCP connections is claimed in a different patent owned by Patent Owner, U.S. Patent No. 10,225,304. Pet. Reply 22–23 (citing Ex. 1027). This scenario—where a "'critical' unclaimed feature . . . is claimed by a different patent"—is an indicator that the challenged claims are not coextensive with the MOVE Media Player. *See Fox Factory*, 944 F.3d at 1375. We also disagree with Patent Owner's argument that the challenged claims of the '680 patent, such as claim 14, are drawn to multiple TCP connections. PO Sur-reply 25. These claims do not include any limitations directed to TCP.

Although Patent Owner argues that "the existence of one or two unclaimed features, standing alone, [does not] mean[] that nexus may not be presumed" (PO Sur-reply 22 (quoting *Fox Factory*, 944 F.3d at 1374 (alterations added))), Patent Owner's own documents state that multiple TCP connections, an unclaimed feature, is the "secret" of the technology. Ex. 2011, 6; Ex. 2059, 11. Thus, we decline to minimize the importance of multiple TCP connections to the MOVE Media Player. We also have considered Patent Owner's argument that "MOVE [Networks'] and [Patent Owner]'s successes are attributable to more than the mere optional use of multiple TCP connections and HTTP web servers" because "it was precisely the claimed 'streamlets' that enabled clients to request the video portions via simple HTTP request over multiple TCP connections rather than from specialized media servers." PO Sur-reply 23 (quoting Ex. 2011, 3, 7). Yet the very evidence Patent Owner cites for this proposition suggests that any alleged success is due to more than just the streamlets. *See* Ex. 2011, 3

("The use of streamlets combined with our other innovative concepts makes possible" certain enumerated benefits), 7 (crediting only "the elimination of the need for specialized *media* servers" as "[a] key and far reaching conceptional and practical innovation").

Petitioner also has cited evidence that the use of HTTP and standard (non-specialized) servers were other critical unclaimed features of the MOVE Media Player. *See* Ex. 2012, 22; Ex. 2062, 3. In fact, Patent Owner cites some of these aspects of the MOVE Media Player in support of its commercial success (PO Resp. 61), copying (*id.* at 63), and industry praise arguments (*id.* at 65). The record includes at least some evidence suggesting that these features also were considered significant features of MOVE's technology. *See* Ex. 2006 ¶¶ 46–47 (Dr. Jeffay testifying that he "was impressed by the use of HTTP in the [adaptive bitrate] patents."); Ex. 1021, 145:13–20 (Mr. Major agreeing that the use of ordinary web servers over HTTP was a core feature of MOVE's adaptive streaming patent technology).

We are mindful that "[a] patent claim is not coextensive with a product that includes a 'critical' unclaimed feature that is claimed by a different patent and that materially impacts the product's functionality." *Fox Factory*, 944 F.3d at 1375. Given that Petitioner has shown multiple TCP connections to be a critical unclaimed feature of the MOVE Media Player that is associated with a different patent (*see* Ex. 1027; Ex. 2011, 6; Ex. 2059, 11), we find that Petitioner has successfully rebutted any presumption of nexus. *See WBIP, LLC v. Kohler Co.*, 829 F.3d 1317, 1329 (Fed. Cir. 2016) (stating that the presumption of nexus can be rebutted when the objective evidence is tied to unclaimed features). Record evidence supporting the significance of HTTP-based video delivery to MOVE's

technology (*see* Ex. 2006 ¶¶ 46–47; Ex. 1021, 145:13–20) also tends to rebut any presumption of nexus. For these reasons, we find that Patent Owner is not entitled to a presumption of nexus.

Next, we turn to Patent Owner's evidence of direct nexus. Patent Owner relies on Dr. Jeffay's testimony that the MOVE Media Player's "real-world benefits . . . are a 'direct result of the unique characteristics of the claimed invention.'" PO Resp. 53 (quoting *Fox Factory*, 944 F.3d at 1373–74) (citing Ex. 2006 ¶¶ 164–186; Ex. 2011). Patent Owner argues that certain evidence of praise is tied to "the expressly claimed features, such as 'actively adjusting . . . video quality to the bandwidth available' and delivering 'pieces of content progressively.'" *Id.* at 53–54 (citing Ex. 2023). Patent Owner argues that other evidence of "surprising results and praise are directly tied to the claimed features of the patented ABR technology." *Id.* at 60 (citing Ex. 2006 ¶¶ 185–187, 189, 205). Furthermore, according to Patent Owner, "[e]ven without the presumption [of nexus], MOVE's strong commercial success, the surprising results and praise MOVE received, and other secondary considerations directly tied to the MOVE system confirm non-obviousness." PO Sur-reply 26.

Petitioner argues that alleged "unique characteristics" of "actively adjusting . . . video quality to the bandwidth available" and "delivering pieces of content progressively" were already in the prior art, such as Ogdon and a reference known as Leaning,[12] and cannot support a finding of nexus. Pet. Reply 24 (citing *Kao*, 639 F.3d at 1069; Ex. 1004, 3:38–41, 22:10–23; Ex. 1028 ¶¶ 77–80). Otherwise, Petitioner relies on the same arguments

[12] International Patent Publication No. WO 02/49343 A1, filed Dec. 14, 2001, published June 20, 2002 (Ex. 1024, "Leaning").

discussed above about critical unclaimed features undermining nexus. *Id.* at 22–24.

We agree with Petitioner that "actively adjusting . . . video quality to the bandwidth available" and "delivering pieces of content progressively" were taught by the prior art, namely, Ogdon and Leaning. *See* Ex. 1004, 3:38–41 (Ogdon teaching "dynamically and adaptively switch[ing] between . . . versions of the presentation according to network transmission characteristics"), 22:10–23 (Ogdon teaching a client node that "select[s] an appropriate content webserver and an appropriate version off the next collection of segments to be retrieved" when the next collection of segments is not cached); Ex. 1024, code (57) (Leaning teaching "switching between alternative sub-file sets representing alternative delivery modes of data rates"), 1:12–19 (Leaning teaching "control means responsive to the state of the buffer to generate request messages for further files for replenishment of the buffer"); *see also* Ex. 1028 ¶¶ 77–80 (Dr. Houh's testimony regarding Ogdon and Leaning). Nexus cannot be predicated on aspects of the technology that are already in the prior art. *See Kao*, 639 F.3d at 1069. Thus, Patent Owner's attempt to establish a direct nexus based on these alleged "unique characteristics" is fatally flawed, and we accord these arguments little or no weight.

We also note that Patent Owner relies on arguments made in exhibits when making various statements regarding direct nexus. Specifically, Patent Owner cites to Dr. Jeffay's testimony. *See*, *e.g.*, PO Resp. 53 (citing Ex. 2006 ¶¶ 165–189), 60 (citing Ex. 2006 ¶¶ 185, 198–204). 37 C.F.R. § 42.6(a)(3) states that "[a]rguments must not be incorporated by reference from one document into another document." Further, "parties that

incorporate expert testimony by reference in their petitions, motions, or replies without providing explanation of such testimony risk having the testimony not considered by the Board." Patent Trial and Appeal Board Consolidated Trial Practice Guide at 35–36 (Nov. 2019) ("Consolidated Trial Practice Guide"), available at https://www.uspto.gov/sites/default/files/documents/tpgnov.pdf (citing *Cisco Systems, Inc. v. C-Cation Techs., LLC*, IPR2014-00454 (PTAB Aug. 29, 2014) (Paper 12) (informative)). Patent Owner's failure to fully explain its arguments about direct nexus in its main papers represents a separate, independent reason for according such arguments little to no weight.

We nonetheless briefly discuss Patent Owner's alleged evidence regarding objective indicia of nonobviousness.

(2) Long-Felt but Unmet Need/Failure of Others

Patent Owner contends that "[t]he claimed invention solved a long-felt need for streaming live and on-demand content over the Internet." PO Resp. 54 (citing Ex. 2006 ¶¶ 190–198; Ex. 2010 ¶¶ 7–10, 13); *see also* PO Sur-reply 27. In particular, Patent Owner cites evidence related to the need for "video content in higher quality," "HD video," "online HDTV," and "high quality, full-screen video content." PO Resp. 55, 57–58. According to Patent Owner, "[c]ompeting technologies attempted but failed to meet this same need." *Id.* at 56 (citing Ex. 2010 ¶¶ 7–10; Ex. 2006 ¶¶ 191–198). In particular, Patent Owner cites evidence of then-existing video streaming failures from "buffering, hesitancy, delays, stalling, freezing, and unresponsiveness." *Id.* at 55; *see also id.* at 56–57 (citing, *inter alia*, Ex. 2006 ¶¶ 191–198) (similar argument). Patent Owner also argues that entities such as ABC.com and Microsoft abandoned their inferior

technologies and adopted adaptive bitrate streaming technology with MOVE Networks' "technique of detecting a watcher's bandwidth and CPU capabilities in real time and then adjusting the quality of a video stream." *Id.* at 57 (quoting Ex. 2036, 1) (citing Ex. 2026, 2; Exs. 2032–2333).[13]

Petitioner argues that any satisfaction of a long-felt need was "simply due to increased Internet bandwidth and advances in computing technology." Pet. Reply 25 (citing Ex. 1028 ¶¶ 81–84).

Patent Owner contends that there is a long-felt need for online high-definition video over the internet (PO Resp. 54; PO Sur-reply 27), citing various articles in support of that theory. *See*, *e.g.*, Ex. 2027, 1. However, Patent Owner also cites evidence that at least one competitor's product, Adobe Flash, was already providing video over the internet, albeit using different technology and for shorter average session times. *See*, *e.g.*, Ex. 2006 ¶¶ 191, 193; Ex. 2024, 1; Ex. 2028, 1; Ex. 2034. This tends to undermine Patent Owner's contention of unmet need, or that others had failed. At the same time, Patent Owner's evidence tends to show that MOVE Networks' technology was regarded as superior to Adobe's insofar as it overcame certain problems (e.g., buffering) that users experienced with Adobe's technology. *See*, *e.g.*, Ex. 2034. This allowed for longer average streaming sessions. *See*, *e.g.*, Ex. 2024; Ex. 2025, 1; Ex. 2026, 2; Ex. 2038.

Nevertheless, even if Patent Owner had defined the alleged long-felt need as a need for improved long-duration, high-definition video over the

[13] As discussed below, Petitioner moves to exclude certain emails between MOVE Networks and Microsoft that Patent Owner cites for this proposition. *See* below section II(D). Notwithstanding, we consider these emails as part of our analysis and dismiss the motion to exclude these emails as moot. *See id.*

internet—it did not—we would still find that Patent Owner's evidence tied to the MOVE Media Player lacks a nexus to the claimed invention for the reasons mentioned above. *See* above section II(C)(5)(a)(vi)(1). Specifically, Patent Owner's arguments keyed to the "patented ABR [adaptive bitrate] technology" (PO Resp. 54–59) are not sufficient to establish a nexus to the challenged claims. *See* above section II(C)(5)(a)(vi)(1). In addition, adaptive bitrate streaming was already known in the art. *See id.*

On balance, MOVE Networks' technology was at least associated with desired improvements to longer-duration, high-definition video, but Patent Owner's evidence of nexus is lacking. Thus, we accord Patent Owner's evidence little to no weight.

(3) Surprising Results

Patent Owner argues that the MOVE Media Player "achieved what many thought impossible, and contributed to a major shift in the industry away from cable/satellite packages to internet streaming (i.e., cord-cutting)." PO Resp. 58 (Ex. 2006 ¶ 199; Ex. 2022; Ex. 2027); *see also* PO Sur-reply 27 (similar argument). In particular, Patent Owner cites to articles expressing surprise at how well the MOVE Media Player performed at the time of its introduction. PO Resp. 59–60 (citing Ex. 2006 ¶¶ 199–202; Exs. 2022, 2027). Patent Owner puts forth some evidence that the MOVE Media Player was regarded as being superior to other streaming technologies at the time. PO Resp. 59 (citing Ex. 2006 ¶¶ 202–203; Ex. 2039).

"Unexpected results that are probative of nonobviousness are those that are 'different in kind and not merely in degree from the results of the prior art.'" *Galderma Lab'ys, L.P. v. Tolmar, Inc.*, 737 F.3d 731, 739 (Fed.

Cir. 2013) (quoting *Iron Grip Barbell Co. v. USA Sports, Inc.*, 392 F.3d 1317, 1322 (Fed. Cir. 2004)). Although Patent Owner puts forth some evidence of users' surprise at the higher quality of the MOVE Media Player's streaming video, the record does not establish that MOVE's streaming video results were of a different and unexpected kind consistent with the holding of *Iron Grip*. The results were still streaming video, as had already existed, albeit at a better quality or degree according to Patent Owner's telling. Further, Patent Owner's evidence suffers from a lack of nexus to the claimed invention, as discussed above. *See* above section II(C)(5)(a)(vi)(1). For these reasons, we accord Patent Owner's evidence of unexpected results little to no weight.

(4) Commercial Success

Patent Owner argues that, "[w]ithin months of its 2006 commercial launch, the MOVE Media Player was being used to deliver roughly as much data as YouTube and more data than the web sites of CNN, NBC, and CBS, none of which used the MOVE Media Player." PO Resp. 60 (citing Ex. 2006 ¶ 207). Patent Owner also contends that a number of companies adopted MOVE's technology after it was made commercially available. *Id.* at 61 (citing Ex. 2006 ¶¶ 212–230); *see also* PO Sur-reply 26–27 (similar argument). Patent Owner also cites investments made in MOVE Networks as being indicative of commercial success. PO Resp. 61–62. Patent Owner additionally cites evidence of licenses for its adaptive bitrate patents as an indicator of nonobviousness. *Id.* at 62 (citing Ex. 2053, 23 n.100; Exs. 2083–2085).

Petitioner contends that any commercial success was "simply due to increased Internet bandwidth and advances in computing technology, such

as interoperability standards and availability of low-cost, large-scale solid state memory—***not*** MOVE's player." Pet. Reply 25 (citing Ex. 1028 ¶¶ 81–84). Petitioner further contends that MOVE later became a commercial failure overnight "[a]s soon as others were able to leverage those advancements with their own streaming products." *Id.* (citing Ex. 2015). According to Petitioner, Patent Owner's "ability to extract some licenses as part of patent assertion settlements" is not "sufficient 'commercial success' to overcome a strong showing of obviousness." *Id.* (citing *Iron Grip*, 392 F.3d at 1324).

The evidence of record shows that MOVE Networks as an entity experienced some commercial success, at least initially. By May 2007, MOVE Networks was delivering as much streaming data as YouTube and more streaming data than the CNN, NBC, and CBS websites. *See* Ex. 2024, 1. MOVE Networks also collaborated with industry leaders such as ABC, Microsoft, Fox, Level 3, and ESPN. *See*, *e.g.*, Exs. 2024, 2029, 2030, 2034; Ex. 2060, 4–5. This evidence tends to undermine Petitioner's argument that MOVE's successes were solely due to improved bandwidth and computing technology, which is based on nothing more than Dr. Houh's generalized view of the state of the art in the mid-1990s. *See* Ex. 1028 ¶ 83.

Notwithstanding, as discussed above, Patent Owner's evidence suffers from a lack of nexus to the claimed invention. *See* above section II(C)(5)(a)(vi)(1). Even Dr. Jeffay attributes at least some of the success of MOVE Networks' technology to its use of standard web servers, rather than media servers, which is outside the scope of the challenged claims. *See* Ex. 2006 ¶ 209. Further, to the extent that Patent Owner's evidence of commercial success is tied to MOVE Networks as an entity, or to MOVE's

"technology" or "ABR [adaptive bitrate] technology" generally (*see, e.g.*, *id.* ¶¶ 206–210, 212–213, 215–216, 219, 225), it is not sufficiently tied to the claimed invention of the '680 patent to merit significant weight. *See* above section II(C)(5)(a)(vi)(1).

We also have considered Patent Owner's evidence of licenses for its adaptive bitrate patents. *See* Ex. 2053, 23 n.100; Exs. 2083–2085. We agree with Petitioner (Pet. Reply 25) that licensing evidence is entitled to little weight as an indicator of commercial success where, as here, Patent Owner has not demonstrated a nexus between the invention of the '680 patent and these licenses. *See Iron Grip*, 392 F.3d at 1324 (holding that "the existence of licenses is of little significance" in the absence of nexus evidence).

On balance, we are mindful of our reviewing court's holding that "[i]t is not necessary . . . that the patented invention be solely responsible for the commercial success, in order for this factor to be given weight appropriate to the evidence, along with other pertinent factors." *Cont'l Can Co. USA v. Monsanto Co.*, 948 F.2d 1264, 1273 (Fed. Cir. 1991). Based on the foregoing discussion, we accord some weight, but not significant weight, to Patent Owner's evidence of commercial success.

(5) Copying

Patent Owner contends that, after disclosing its technology to Apple under multiple non-disclosure agreements, Apple developed the "HLS Standard," which was similar to MOVE's technology. PO Resp. 62–63 (citing Exs. 2055, 2056; Ex. 2063, 38:20–40:7); *see also* PO Sur-reply 27 (similar argument). Patent Owner also contends that Microsoft implemented

its own version of "HTTP-based ABR [adaptive bitrate] streaming technology." PO Resp. 63 (citing Exs. 2032, 2033, 2057).[14]

Petitioner replies that Patent Owner's "innuendo that Microsoft and Apple stole and copied its invention after entering into NDAs is unsupported and undermined by the fact that ***[Patent Owner] never sued either company for patent infringement or breach of the NDAs***—litigious as [Patent Owner] is." Pet. Reply 25–26.

Patent Owner's alleged evidence of copying related to Apple includes non-disclosure agreements (Exs. 2055, 2056) and David Ericson's testimony from the ITC in which he states that the HLS Standard "is very similar to what Move had developed and was using as a proposed standard." Ex. 2063, 38:23–39:7. Mr. Ericson goes on to discuss certain similarities related to "indexing the video encoded segments." *Id.* at 39:11–40:7. We do not discern how this testimony pertains to the claims of the '680 patent, and Patent Owner does not explain as much. We accord it little to no weight. Otherwise, Dr. Jeffay cites an article suggesting that Apple was turning to adaptive bitrate technology. Ex. 2006 ¶ 232 (citing Ex. 2036). But adaptive bitrate technology was already in the prior art, as discussed above. *See* above section II(C)(5)(a)(vi)(1).

Regarding Microsoft, Patent Owner adduces evidence of collaboration between MOVE Networks and Microsoft. *See* Exs. 2032, 2050. Patent Owner's allegations of copying hinge on Microsoft's "Smooth Streaming"

---

[14] As discussed below, Petitioner moves to exclude certain emails between MOVE Networks and Microsoft that Patent Owner cites for this proposition. *See* below section II(D). Notwithstanding, we consider these emails as part of our analysis and dismiss the motion to exclude these emails as moot. *See id.*

extension implementing adaptive bitrate technology. PO Resp. 63; Ex. 2006 ¶ 234; Ex. 2057. However, Patent Owner does not establish any particular link between "Smooth Streaming" and the claims of the '680 patent other than the use of adaptive bitrate video streaming (*see* Ex. 2006 ¶ 234; Ex. 2057), which was in the prior art. *See* above section II(C)(5)(a)(vi)(1).

For these reasons, we accord Patent Owner's evidence of copying little to no weight.

(6) Industry Praise[15]

Patent Owner cites to articles that use superlative language to describe the MOVE Media Player's performance due to its ability to stream video at an adaptive rate on standard web servers. PO Resp. 59–60 (citing, *inter alia*, Exs. 2024, 2026, 2038, 2040–2043). Patent Owner further cites other evidence touting the ability of the MOVE Media Player to create streamlets by breaking up the video into bits. *Id.* (citing, *inter alia*, Ex. 2024; Ex. 2026, 2; Ex. 2040). As discussed above, however, the concepts of adaptive rate streaming and dividing the data stream into slices were already in the prior art. *See* above section II(C)(5)(a)(vi)(1). Further, as also discussed above, the use of standard web servers is an unclaimed feature. *See id.* As such, Patent Owner's evidence tying these features to various laudatory comments lacks a nexus to the claimed invention.

[15] Patent Owner's Response includes two different sections with evidence of industry praise. *See* PO Resp. 58–60 ("Surprising Results and Praise"), 63–65 ("Industry Praise and Peer Recognition"). We discuss both sections together.

Patent Owner also cites a 2020 Emmy award[16] recognizing SlingTV[17] as evidence of industry praise. PO Resp. 63–64 (citing Ex. 2010 ¶ 21; Ex. 2013). Yet SlingTV's own press release states that this award relates to SlingTV's "over-the-top television service" that was "launched February 9, 2015." Ex. 2013. Patent Owner has made no attempt to show a nexus to any SlingTV product (*see supra* note 11), and we find Patent Owner's statement that SlingTV "implemented the patented ABR [adaptive bitrate] technology after [Patent Owner] acquired MOVE [Networks] and the ABR Patents" (PO Resp. 63–64) is insufficient to establish nexus.

Patent Owner also puts forth evidence of other awards: AlwaysOn's OnHollywood 100 (Exs. 2016, 2017), AlwaysOn's OnMedia 100 (Ex. 2018), Red Herring's Global 100[18] (Ex. 2019), and TechCrunchies (Ex. 2020). We have reviewed the underlying evidence of these awards, and we find that none of them relates specifically to the technology claimed in the '680 patent. We note all of these awards appear to have been conferred on MOVE Networks as a business entity. *See*, *e.g.*, Ex. 2016 ("The OnHollywood 100 was selected from more than 1000 companies").

Patent Owner also cites certain laudatory statements made by "content distributors and competitors," i.e., Televisa (Ex. 2042), Level 3 (Ex. 2044),

---

[16] As discussed below, we strike Patent Owner's arguments regarding an unrelated 2006 Emmy award that appear in Patent Owner's Sur-reply. *See* below section II(D).

[17] Patent Owner states that "Sling TV L.L.C. [is] the exclusive licensee of the '680 patent." Paper 4, 2.

[18] Patent Owner also cites a "Red Herring 100" award (PO Resp. 63), but no evidence of such an award appears in the record aside from Dr. Jeffay's testimony. *See* Ex. 2006 ¶ 243.

and Microsoft (Ex. 2060). PO Resp. 64–65. Of these statements, only Microsoft's arguably relates in part to the patented technology. *Id.* at 64 (quoting Ex. 2060, 4) (discussing "an adaptive streaming technology that seamlessly adjusts image quality to fit available bandwidth on each viewer's Internet connection"). And Microsoft's general statement about adaptive streaming technology lacks a nexus to the claimed for the same reasons discussed above. *See* above section II(C)(5)(a)(vi)(1).

Finally, Patent Owner cites the statements of "users" of MOVE's technology. PO Resp. 65 (citing Exs. 2023, 2026, 2043). The evidence backing these statements appears to be certain blog posts from the internet. *See* Exs. 2023, 2026, 2043. The blog posts, along with Dr. Jeffay's supporting testimony (*see* Ex. 2006 ¶¶ 237, 239), do not establish why the cited "users" are representative of the views of the industry as a whole. In the absence of such information, we find these statements to be of little evidentiary value.

Having considered Patent Owner's alleged evidence of industry praise, and having considered the deficiencies discussed above in Patent Owner's showing of nexus (*see* above section II(C)(5)(a)(vi)(1)), we accord this evidence little or no weight.

(7) Conclusion Regarding Secondary Considerations of Nonobviousness

We accord Patent Owner's evidence of commercial success some weight, but not significant weight. We accord Patent Owner's evidence of long-felt need/failure of others, unexpected results, copying, and industry praise little to no weight. In general, Patent Owner's failure to establish a nexus between the merits of the claimed invention and the alleged secondary

considerations undermines the probative value of Patent Owner's evidence as indicia of nonobviousness.

vii. Claim 1 Conclusion

Based on the complete record presented, Petitioner has shown that the proposed combination of Ogdon and Allen teaches all limitations of claim 1. Petitioner also has put forth a persuasive rationale for combining Allen with Ogdon with a reasonable expectation of success. We find that Patent Owner's evidence of secondary considerations of nonobviousness does not outweigh Petitioner's persuasive obviousness showing under the other *Graham* factors. Thus, we determine that Petitioner has shown by a preponderance of the evidence that the subject matter of claim 1 would have been obvious over the proposed combination of Ogdon and Allen.

ix. Remaining claims.

Petitioner provides detailed explanations as to how the proposed combination of Ogdon and Allen teaches or suggests the claim limitations of independent claims 14, 22, and 28, and dependent claims 2, 4–12, 15–19, 21, 23–25, 27, and 29, citing Dr. Houh's declaration for support. Pet. 27–54 (citing Ex. 1004, 1:62–2:1, 2:13–63, 6:2–5, 6:41–44, 7:10–13, 7:40–63, 8:27–31, 9:27–33, 12:9–19, 15:52–58, 19:54–67, 21:40–45, 22:10–64, 23:41–24:6, 24:14–55, 25:25–27, 25:43–44, 25:63–26:14, Figs. 2C, 3; Ex. 1005, 3:16–20, 5:15–21, 12:2–5; Ex. 1003 ¶¶ 83– 90, 92–95, 101, 120–121, 139).

a. Claim 2

Claim 2 depends from claim 1 and recites that "the processor is further for generating a plurality of virtual timelines," wherein "each virtual timeline corresponds to each of the low quality stream, the medium quality

stream, and the high quality stream." Ex. 1001, 18:52–56. Petitioner contends that Ogdon discloses storing "scripts" that "function as playlists or virtual timelines" because "Ogdon discloses 'ordering of predefined segment (or subcollection thereof) . . . presented and archived, and subsequently represented' and 'sequentially-ordered scripts can be created." Pet. 27 (citing Ex. 1004, 3:11–23, 9:27–33). Petitioner then contends that Allen teaches that it was known to encode video content into at least three different quality levels (or bitrates), i.e., low quality, medium quality and high quality, for streaming video. *Id.* at 28 (citing Ex. 1005, 12:1–5). According to Petitioner, in view of the teachings of Allen, an ordinarily skilled artisan would have found it obvious that the virtual timeline of Ogdon "corresponds to each of the low quality, medium quality, and high quality streams." *Id.* (citing Ex. 1003 ¶ 84).

Patent Owner acknowledges that "the term 'virtual timeline' is broad enough to be met by a 'playlist' and, therefore, is not limited to 'entire content files.'" PO Resp. 39. Although Patent Owner then contends that claims "virtual timelines" as recited in claims 8, 14, 22, and 28 require that a server store the "virtual timeline" for retrieval by a client (and as discussed in detail below with respect to claim 8), Patent Owner provides no argument with respect to claim 2.

Ogdon teaches "ordering of predefined segment (or subcollection thereof) . . . presented and archived, and subsequently represented' and 'sequentially-ordered scripts can be created." Ex. 1004, 3:11–23, 9:27–33. As such, we are persuaded that Ogdon teaches that "the processor is further for generating a plurality of virtual timelines," as recited in claim 2. Our analysis regarding secondary considerations of nonobviousness discussed

above for claim 1 applies equally to this claim. *See* above section II(C)(5)(a)(vi). Thus, we determine that Petitioner has shown by a preponderance of the evidence that the subject matter of claim 2 would have been obvious over the proposed combination of Ogdon and Allen.

b. Claim 4

Claim 4 depends from claim 1 and recites that "the video includes archived content." Ex. 1001, 18:59–60. Petitioner cites Ogdon's teaching that video may be archived content. Pet. 29 (citing Ex. 1004, 3:12–14, 10:5–19, Fig. 1A). Patent Owner does not provide separate arguments for claim 4 but relies on the same arguments with respect to claim 1. *See generally* PO Resp.

Ogdon teaches that segments can be presented, archived, and "subsequently represented." Ex. 1004, 3:12–14. As such, we are persuaded that Ogdon teaches the limitation in claim 4. Our analysis regarding secondary considerations of nonobviousness discussed above for claim 1 applies equally to this claim. *See* above section II(C)(5)(a)(vi). Thus, we determine that Petitioner has shown by a preponderance of the evidence that the subject matter of claim 4 would have been obvious over the proposed combination of Ogdon and Allen.

c. Claim 5

Claim 5 depends from claim 1 and recites that

> the second streamlet of each of the groups of streamlets each has the same second duration and corresponds to the same second portion of the video in the low quality stream, the medium quality stream, and the high quality stream, the second streamlet of the low quality stream having the same bitrate as the first streamlet of the low quality stream

Ex. 1001, 18:61–67. Petitioner relies on the same analysis from claim 1 "as described above with respect to the 'first' segment." Pet. 29–30. Patent Owner does not provide separate arguments for claim 5 but relies on the same arguments with respect to claim 1. *See generally* PO Resp.

For the same reasons discussed above, we are persuaded that the proposed combination of Ogdon and Allen teaches claim 5. *See* above sections II(C)(5)(a)(i)-(v). Our analysis regarding secondary considerations of nonobviousness discussed above for claim 1 applies equally to this claim. *See* above section II(C)(5)(a)(vi). Thus, we determine that Petitioner has shown by a preponderance of the evidence that the subject matter of claim 5 would have been obvious over the proposed combination of Ogdon and Allen.

d. Claim 6

Claim 6 depends from claim 5 and recites that "the first and second durations are different." Ex. 1001, 19:1–2. Petitioner contends that an ordinarily skilled artisan would have known that "it was desirable to 'reduce[] the start-up' for streaming content to beneficially allow the user to view the stream more quickly." Pet. 30 (citing Ex. 1003 ¶ 88; Ex. 1013, 3:29–54). Accordingly, Petitioner contends that an ordinarily skilled artisan would have been motivated to make the duration of the first segment shorter than the duration of the second segment because "a shorter first segment can be requested by the client and the client can quickly make a determination of an appropriate quality level using a current bandwidth determination based on the receive time from receiving the first segment," so that "the second segment is requested, received, and started playback after only a short time leading to the most appropriate bandwidth version being played back for the

user soon after the streaming begin." *Id.* Petitioner also contends that it would have been obvious to try different durations because there are only two possible scenarios: segments with the same duration and segments with different durations. *Id.* at 30–31 (citing Ex. 1003 ¶ 89). Patent Owner does not provide separate arguments for claim 6. *See generally* PO Resp.

We are persuaded by Petitioner's unrebutted rationale that an ordinarily skilled artisan considering Ogdon's teachings would have known to make the duration of the first segment shorter than that of the second segment to allow for a quicker startup of streaming. *See* Ex. 1003 ¶ 88. This makes sense in Ogdon's adaptive transmission system, which must account for the initial detection of the transmission rate when the connection is relatively slow. *See* Ex. 1004, 3:38–63, code (57). We also agree with Petitioner's obvious-to-try rationale given that only two possible variations exist. *See* Ex. 1003 ¶ 89. Our analysis regarding secondary considerations of nonobviousness discussed above for claim 1 applies equally to this claim. *See* above section II(C)(5)(a)(vi). Thus, we determine that Petitioner has shown by a preponderance of the evidence that the subject matter of claim 6 would have been obvious over the proposed combination of Ogdon and Allen.

e. Claim 7

Claim 7 depends from claim 1 and recites that the system further comprises:

> a plurality of web servers located at different locations across the internet, each web server configured to:
>
> receive at least one streamlet request over one or more internet connections from the one or more end user stations to retrieve the first streamlet storing a portion of the video,

> wherein the at least one streamlet request from the one or more end user stations includes a request for a currently selected first streamlet from one of the low quality stream, the medium quality stream, and the high quality stream based upon a determination by the end user station to select a higher or lower bitrate version of the streams;
>
> retrieve from the storage device the requested first streamlet from the currently selected one of the low quality stream, the medium quality stream, and the high quality stream; and
>
> send the retrieved first streamlet from the currently selected on of the different copies to the requesting one of the end user stations over the one or more network connections.

Ex. 1001, 19:3–22 (formatting applied). For the "plurality of web servers located at different locations across the internet," Petitioner cites Ogdon's content webservers 96 (including content webservers 96a and alternate content webservers 96b) "for providing presentation data to client sites 54." Pet. 31–32 (quoting Ex. 1004, 8:27–31).

For the recited "receiv[ing] at least one streamlet request," Petitioner cites Ogdon's teaching of content webservers 96 receiving streamlet (segment) request from end user stations (client node(s)). Pet. 32–34 (citing Ex. 1003 ¶ 92; Ex. 1004, 6:41–44, 7:10–13, 7:59–63, 19:54–59, 21:40–45, 22:12–17). Based on an analysis similar to that for claim 1 (*see* above sections II(C)(5)(a)(i)–(v)), Petitioner contends that the proposed combination of Ogdon and Allen teaches client nodes (i.e., the recited "end user stations") selecting stream quality based on their determination that a higher or lower bitrate version of the streams is needed. Pet. 33–34 (citing Ex. 1003 ¶ 84; Ex. 1004, 23:41–50, 23:51–24:6, 24:50–55).

For the recited "retriev[ing] from the storage device the requested first streamlet," Petitioner contends that Ogdon's webservers 96 retrieve from the

storage device the requested streamlet (segment) from the currently selected stream. Pet. 34 (citing Ex. 1003 ¶ 93; Ex. 1004, 19:54–67, Fig. 2C). In particular, according to Petitioner, in Ogdon, "client nodes 'retrieve elements or subcollections from 'content webservers 96 where the presentation segments have been pre-stored')." *Id.* (citing Ex. 1004, 19:54–67).

For the recited "send[ing] the retrieved first streamlet," Petitioner cites Ogdon's teaching of the webservers sending the requested segments to the end user stations (client node) over an Internet connection. Pet. 35 (citing Ex. 1003 ¶ 94; Ex. 1004, 7:59–63, 24:48–49, 25:25–27).

According to Patent Owner, claim 7 "requires ***different webserver***s that, in response to client requests, each retrieve ***the same*** content from ***the same*** central storage device." PO Resp. 46. Patent Owner likens the recitations in claim 7 to the proxy cache servers described in the '680 patent. *Id.* (citing Ex. 1001, 7:1–6). Patent Owner argues that Ogdon instead "describes an embodiment in which *clients* retrieve different content from 'content webserver.'" *Id.* at 47 (citing Ex. 2006 ¶ 141; Ex. 1004, 19:54–67).

We agree with Patent Owner. As an initial matter, although the claim recites "retrieve from the storage device the requested first streamlet" (Ex. 1001, 19:16–17), we note that "the storage device" has no antecedent basis in the claim. *See generally id.* at 19:3–22. That is, claim 7 merely recites "a plurality of webservers . . . , each web server configured to: receive at least one streamlet request . . . to retrieve the first streamlet storing a portion of the video," and "retrieve from the storage device the requested first streamlet." *Id.*

Nevertheless, Petitioner maps "the storage device" to Ogdon's webservers 96. *See* Pet. 34 (citing Ex. 1004, 19:54–67 (client nodes "retrieve elements or subcollections from 'content servers 96 where the presentation segments have been prestored'")). However, Petitioner also maps the recited "plurality of web servers" to the same elements in Ogdon, i.e., webservers 96. *See id.* at 31–32. Here, Petitioner's analysis for claim 7 breaks down for the following recitation: each web server is configured to "retrieve from the storage device the requested first streamlet." *See id.* at 35. Thus, Petitioner essentially relies on each of Ogdon's webservers 96 retrieving the streamlet from "content servers 96," i.e., from itself. *Id.* Petitioner does not provide any explanation as to how this could be interpreted in a coherent way consistent with Ogdon's teachings.

Thus, we are not persuaded by Petitioner's analysis for claim 7. We determine that Petitioner has not shown by a preponderance of the evidence that the subject matter of claim 7 would have been obvious over the proposed combination of Ogdon and Allen.

f. Claim 8

Claim 8 depends from claim 1 and recites "a first web server configured to: receive at least one virtual timeline request over the one or more internet connections from the one or more end user stations to retrieve a virtual timeline" and "send the virtual timeline to the requesting one of the end user stations." Ex. 1001, 19:24–29. Petitioner contends that "Ogdon discloses storing a virtual timeline in the form of 'scripts' that function as playlists." Pet. 17 (citing Ex. 1004, 3:11–23, 9:27–33). Petitioner further contends that Ogdon discloses that host 200 ensures the sequential playback of the streams of appropriate resolutions by sending "commands ("which

may be considered virtual timelines in the form of a playlist") to the client." *Id.* at 18–19 (citing Ex. 1003, 3:24–63, Fig. 2C).

Patent Owner argues that Ogdon's "scripts" cannot be read onto the claimed "virtual timeline" because claim 8 requires that "a server (e.g., a 'web server') store the 'virtual timeline' for retrieval by the ***client*** (e.g., an 'end user station')." PO Resp. 39–40. Patent Owner explains that Ogdon's content manager 104 "distributes presentation data, such as scripting information for a presentation," and that "host 200" must "request the one or more scripts for the presentation from the content manager 104" before providing them to "client nodes 56" for "presentation performance to their respective audience members." *Id.* at 40 (quoting Ex. 1004, 9:31–33, 18:37–40, 21:50–58). Thus, according to Patent Owner, "Ogdon's server sends a script to hosts—not clients," and Ogdon fails to disclose or suggest a client requesting its "script" for retrieval by a client. *Id.* (citing Ex. 2006 ¶ 142).

In its Reply, Petitioner argues that "Ogdon teaches a client request for a virtual timeline in at least the same level of detail as the '680 Patent," and that Dr. Jeffay confirmed that "there is no disclosure [in the '680 patent] concerning how a 'virtual timeline' is requested or received between a client or server." Pet. Reply 20–21 (citing Ex. 1001, 12:31–13:2; Ex. 1030, 251:9–252:10). Petitioner further notes Dr. Jeffay's cross-examination testimony that no such description was necessary because it would have been "incredibly straightforward" for an ordinarily skilled artisan to configure "a web server configured to receive a virtual timeline request over an internet connection from one or more end user stations." *Id.* at 21 (quoting Ex. 1030, 253:10–23). Petitioner also cites testimony from Dr. Houh's reply declaration supporting that it would have been obvious and "incredibly

straightforward" to have a client request a virtual timeline instead of a host. *Id.* at 21 (citing Ex. 1028 ¶¶ 65–68).

In its Sur-reply, Patent Owner argues that Petitioner's proposed "incredibly straightforward" modification from the Reply is an improper new theory that is not in the Petition. PO Sur-reply 20. Patent Owner also argues that this modification is flawed because it would "result in 'scripts' with 'unresolved' placeholders that clients could not access." *Id.* (citing Ex. 1004, 12:44–52, 21:30–39).

Based on the entire trial record, we find that Petitioner has not persuasively shown that Ogdon teaches "send[ing] the virtual timeline to the requesting one of the end user stations," as recited. Ex. 1001, 19:24–29. That is, we are not persuaded that Ogdon teaches the recited end user station requesting and receiving a virtual timeline.

Although Petitioner contends that Ogdon's webserver 96 receives requests from client nodes and then sends a virtual timeline in response (Pet. 35–36 (citing Ex. 1003 ¶ 95)), such contention does not appear to be based on any particular teaching in Ogdon. Dr. Houh's cited testimony likewise includes no citations to Ogdon and, rather, relies on a separate patent publication. *See* Ex. 1003 ¶ 95 (citing Ex. 1008, 7:10–8:15, 10:15–22). As such, this theory is not persuasive because it is not grounded in any particular teaching from Ogdon. And Petitioner appears to have shifted away from this theory in the Petition.

Petitioner's alternative theory from the Petition based on Ogdon's "scripts" seemingly ignores the fact that Ogdon's host, rather than the client nodes, requests the scripts. As noted by Patent Owner (PO Resp. 38–39), "the host 200 . . . request[s] the one or more scripts for the presentation from

the content manager 104." Ex. 1004, 18:37–40. The host then transmits presentation commands to the client nodes. *Id.* at 21:50–58. Thus, Ogdon's scripts do not teach claim 8 at least because (1) the end user station does not make the request; and (2) the host's presentation commands, rather than the end user station's streamlet requests, drive the presentation.

We agree with Patent Owner (PO Sur-reply 20) that Petitioner's "incredibly straightforward" modification based on Dr. Jeffay's cross-examination testimony is an improper new theory that is presented for the first time in the Reply. *See* 37 C.F.R. § 42.23(b) ("A reply may only respond to arguments raised in the corresponding . . . patent owner response."); *see also* Consolidated Trial Practice Guide at 74 ("'Respond,' in the context of 37 C.F.R. § 42.23(b), does not mean proceed in a new direction with a new approach as compared to the positions taken in a prior filing."). Thus, we decline to entertain Petitioner's new theory. And, even if we were to entertain such a modification, Petitioner's theory does not account for Ogdon's host's role in resolving placeholders and identifiers in generic scripts. *See* Ex. 1004, 12:44–52, 21:30–39. This potential flaw tends to undermine Petitioner's new theory.

We have considered Petitioner's shifting and varied positions with respect to claim 8, and we are not persuaded by them. We determine that Petitioner has not shown by a preponderance of the evidence that the subject matter of claim 8 would have been obvious over the proposed combination of Ogdon and Allen.

g. Claim 9

Claim 9 depends from claim 8 which in turn depends from claim 1, wherein claim 9 is similar in scope to claim 7. *Compare* Ex. 1001, 19:6–22,

with id. at 19:30–49. Petitioner relies on the same analysis for claims 7 and 8 that we have discussed above. Pet. 36–37. For the reasons discussed above, we are not persuaded by Petitioner's analysis for claim 8 from which claim 9 depends. *See* above section II(C)(5)(a)(ix)(f). We determine that Petitioner also has not shown by a preponderance of the evidence that the subject matter of claim 9 would have been obvious over the proposed combination of Ogdon and Allen.

h. Claims 10–12

Claim 10 depends from claim 1 and recites that "the at least one virtual timeline corresponds to the currently selected one of the low quality stream, the medium quality stream, and the high quality stream." Ex. 1001, 19:50–53. Claim 11 depends from claim 1 and recites that "the virtual timeline defines a playlist for a user to view." Ex. 1001, 19:54–55. Claim 12 depends from claim 1 and recites that "the virtual timeline comprises a file that is configured to define a playlist for a user to view." Ex. 1001, 19:56–58. With respect to claims 10–12, Petitioner relies on the same analysis for claims 1 and 2 that we have discussed above regarding the "virtual timeline." Pet. 37–38. Patent Owner does not provide separate arguments with respect to claims 10–12. *See generally* PO Resp.

Ogdon teaches "ordering of predefined segment (or subcollection thereof) . . . presented and archived, and subsequently represented' and 'sequentially-ordered scripts can be created." Ex. 1004, 3:11–23, 9:27–33. Dr. Houh testifies that it was known that such a script may be contained in a viewable file. Ex. 1003 ¶ 101. Further, Allen teaches encoding video content into at least three different quality levels or bitrates. Ex. 1005, 12:1–5. As such, we are persuaded that Ogdon teaches the limitations in claims

10–12. Our analysis regarding secondary considerations of nonobviousness discussed above for claim 1 applies equally to this claim. *See* above section II(C)(5)(a)(vi). Thus, we determine that Petitioner has shown by a preponderance of the evidence that the subject matter of claims 10–12 would have been obvious over the proposed combination of Ogdon and Allen.

i. Claim 14

Independent claim 14 recites

> An end user station to stream a video over a network from a server for playback of the video, the content player device comprising:
>
> a processor;
>
> a digital processing apparatus memory device comprising non-transitory machine-readable instructions that, when executed, cause the processor to:
>
> establish one or more network connections between the end user station and the server, wherein the server is configured to access at least one of a plurality of groups of streamlets;
>
> wherein the video is encoded at a plurality of different bitrates to create a plurality of streams including at least a low quality stream, a medium quality stream, and a high quality stream, each of the low quality stream, the medium quality stream, and the high quality stream comprising a group of streamlets encoded at the same respective one of the different bitrates, each group comprising at least first and second streamlets, each of the streamlets corresponding to a portion of the video;
>
> wherein at least one of the low quality stream, the medium quality stream, and the high quality stream is encoded at a bit rate of no less than 600 kbps; and
>
> wherein the first streamlets of each of the low quality stream, the medium quality stream and the high quality stream each has an equal playback duration and each of the first streamlets encodes the same portion of the video at a different one of the different bitrates;
>
> select a specific one of the low quality stream, the medium quality stream, and the high quality stream based upon

> a determination by the end user station to select a higher or lower bitrate version of the streams;
>
> place at least one virtual timeline request for at least one virtual times based on the selected one of the low quality stream, the medium quality stream, and the high quality stream; and
>
> receive the at least one virtual timeline.

Ex. 1001, 19:61–20:34. Petitioner relies on the combination of Ogdon and Allen for teaching claim 14. Pet. 38–46.

Petitioner contends that Ogdon discloses "an end user station (client node(s) 56) to stream a video (video presentation) over a network (Internet) from a server (content webserver(s) 96) for playback of the video." Pet. 38 (citing Ex. 1003 ¶ 103). In particular, Ogdon discloses "client node 56 (e.g., a personal computer)," wherein an ordinarily skilled artisan "would have understood that a 'personal computer' discloses a processor." *Id.* (citing Ex. 1004, 7:45). Petitioner further cites Ogdon's teachings of software running on a client node and contends that the ordinarily skilled artisan "would have understood that a client node personal computer running software, as disclosed in Ogdon, discloses a digital processing apparatus memory device comprising non-transitory machine-readable instructions (software)." *Id.* at 39 (citing Ex. 1004, 7:45, 7:53–63; Ex. 1003 ¶ 107). Petitioner then contends that "Ogdon discloses establishing an internet connection between the end user station (client node(s)) and the server (webserver(s)) because at least one connection is necessary for the client to retrieve elements from the webservers." *Id.* at 40–41 (citing Ex. 7:59–63, 2:1–10, 19:34–44, 19:53–58; Ex. 1003 ¶ 109). According to Petitioner, Ogdon's "server (webserver(s)) is configured to access at least one of a

plurality of groups (collection or subcollections) of streamlets (segments)." *Id.* at 41–42 (citing Ex. 1004, 9:30–31, 9:44–46, 2:43–49; Ex. 1003 ¶ 110).

Petitioner further contends that Ogdon discloses "selecting a specific one of the quality streams based on determination (e.g., based on network data transmission characteristics at the client node(s)) by the end user station (client node) to select a higher or lower bitrate version of the streams." Pet. 43–45 (citing Ex. 1004, 6:41–44, 7:10–13, 7:59–63, 13:47–49, 19:54–59, 21:40–45, 22:12–17, 22:44–47, 23:41–24:6, 24:50–55; Ex. 1003 ¶ 115). Petitioner also contends that Ogdon discloses that "client node 56 . . . . select[s] an appropriate contend webserver and an appropriate version of the next collection of segments to be retried," wherein it would be apparent to an ordinarily skilled artisan that "the collection of segments (also referred to a script) includes a virtual timeline." *Id.* at 45 (quoting Ex. 1004, 22:16–17; citing Ex. 1003 ¶ 116). Thus, according to Petitioner, Ogdon in view of Allen teaches "virtual times (or timelines)" that "are based on the selected one of the low quality stream, the medium quality stream, and the high quality stream." *Id.* at 46. Referring to its above analysis of claim 1, Petitioner contends that Ogdon teaches "receive the at least one virtual timeline." *Id.*; *see also* above section II(C)(5)(i)–(v).

The remainder of claim 14 recites process steps similar to the recited functionalities of claim 1. Accordingly, Petitioner refers to its analysis with respect to claim 1. *See id.* at 42 (citing Ex. 1003 ¶¶ 111–114); *see also* above section II(C)(5)(i)–(v).

Patent Owner does not provide separate arguments for independent claim 14 but relies on the same arguments with respect to claim 1. *See* generally PO Resp.

We are persuaded by Petitioner's showing that Ogdon teaches "an end user station (client node(s) 56) to stream a video (video presentation) over a network (Internet) from a server (content webserver(s) 96) for playback of the video," wherein "an internet connection" is established "between the end user station (client node(s)) and the server (webserver(s)) because at least one connection is necessary for the client to retrieve elements from the webservers." Pet. 38, 40–41. We also find persuasive Petitioner's contention that Ogdon discloses that "client node 56 . . . . select[s] an appropriate content webserver and an appropriate version of the next collection of segments to be retrieved," wherein Ogdon in view of Allen further teaches "virtual times (or timelines)" that "are based on the selected one of the low quality stream, the medium quality stream, and the high quality stream." *Id.* at 45–46.

For the remainder of claim 14, for the same reasons discussed above with respect to claim 1, we are persuaded that the proposed combination of Ogdon and Allen teaches claim 14. *See* above sections II(C)(5)(a)(i)–(v). Our analysis regarding secondary considerations of nonobviousness discussed above for claim 1 applies equally to these claims. *See* above section II(C)(5)(a)(vi). Thus, we determine that Petitioner has shown by a preponderance of the evidence that the subject matter of claim 14 would have been obvious over the proposed combination of Ogdon and Allen.

j. Claim 15

Claim 15 depends from claim 14 and recites that the non-transitory machine-readable instructions, when executed, cause the processor to:

> place one or more streamlet requests to the server over the one or more network connections for the first streamlet of the selected stream;

> receive the requested first streamlet from the server via the one or more network connections wherein the one or more streamlet requests are based on the at least one virtual timeline; and
>
> provide the received first streamlet for playback of the video.

Ex. 1001, 20:38–45. Petitioner contends that Ogdon discloses placing a streamlet request to the server over a network connection for the first streamlet of the selected stream. Pet. 46–47 (citing Ex. 1004, 6:41–44, 7:10–13, 7:59–63; Ex. 1003 120). Petitioner also contends Ogdon in view of Allen discloses receiving the requested first streamlet from the server via the internet connection. *Id.* at 47 (citing Ex. 1004, 7:59–63, 23:45–50; Ex. 1003 ¶ 121). Petitioner then contends Ogdon discloses providing the first streamlet for playback of the video. *Id.* Patent Owner does not provide separate arguments with respect to claim 15. *See generally* PO Resp.

Based on the entire trial record, we are persuaded that the proposed combination of Ogdon and Allen teaches claim 15. Our analysis regarding secondary considerations of nonobviousness discussed above for claim 1 applies equally to this claim. *See* above section II(C)(5)(a)(vi). Thus, we determine that Petitioner has shown by a preponderance of the evidence that the subject matter of claim 15 would have been obvious over the proposed combination of Ogdon and Allen.

k. Claims 16–21

Claims 16–19 and 21 depend from claim 14 but recite similar limitations set forth respectively in claims 5, 6, 10, 11, and 4 depending from claim 1. *Compare* Ex. 1001, 20:46–60, 63–64, *with id.* at 18:61–19:2, 19:50–55, 18:59–60. Petitioner relies on the same analysis for claims 4–6, 10, and 11 that we have discussed above. Pet. 48. Patent Owner does not

provide separate arguments for claims 16–19 and 21. *See generally* PO Resp.

For the same reasons discussed above, we are persuaded that the proposed combination of Ogdon and Allen teaches claims 16–19 and 21. *See* above sections II(C)(5)(a)(i)–(v). Our analysis regarding secondary considerations of nonobviousness discussed above for claim 1 applies equally to this claim. *See* above section II(C)(5)(a)(vi). Thus, we determine that Petitioner has shown by a preponderance of the evidence that the subject matter of claims 16–19 and 21 would have been obvious over the proposed combination of Ogdon and Allen.

l. Claim 22

Independent claim 22 recites "[a] process executable by one or more servers to stream a video for playback by one or more end user stations," the process comprising:

> storing, by the one or more servers, one or more virtual timelines corresponding to a plurality of streams including a low quality stream, a medium quality stream, and a high quality stream, wherein the low quality stream, the medium quality stream, and the high quality stream each comprise a group of streamlets encoded at a respective one of a plurality of different bitrates, each group comprising at least first and second streamlets, each of the streamlets corresponding to a portion of the video;
>
> wherein at least one of the low quality stream, the medium quality stream, and the high quality stream is encoded at a bitrate of no less than 600 kbps; and wherein the first streamlet of each of the groups of streamlets has the same first duration and encodes the same first portion of the video in the low quality stream, the medium quality stream, and the high quality stream, the first streamlet of the low quality stream having a different one of the different bitrates than the first

> streamlet of the high quality stream and the first streamlet of the medium quality stream;
>
> receiving at least one virtual timeline request over one or more internet connections from the one or more end user stations to retrieve a virtual timeline correspond to the first streamlet storing the first portion of the video,
>
> wherein the at least one streamlet request from the one or more end user stations includes a request for a currently selected first streamlet from one of the low quality stream, the medium quality stream, and the high quality stream based upon a determination by the end user station to select a higher or lower bitrate version of the video;
>
> retrieving from the storage device the requested virtual timeline for the currently selected one of the low quality stream, the medium quality stream, and the high quality stream; and
>
> sending the retrieved virtual timeline to the requesting one of the end user stations over the one or more network connections.

Ex. 1001, 21:40–63.

Petitioner refers to its analysis with respect to claims 1, 7, and 8 for disclosing the limitations of claim 22. *See* Pet. 48–50 (citing Ex. 1003 ¶¶ 111–114); *see also* above section II(C)(5)(i)–(v), (ix)(e)–(f). In particular, Petitioner refers to its analysis with respect to claim 1 for the first part of claim 22 (*id.* at 48–49), and relies on its analysis with respect to claims 7 and 8 for teaching: "receiving at least one virtual timeline request over one or more internet connections from the one or more end user stations to retrieve a virtual timeline . . . ," "wherein the at least one streamlet request from the one or more end user stations includes a request for a currently selected first streamlet . . . ," "retrieving from the storage device the requested virtual timeline . . . ," and "sending the retrieved virtual timeline to the requesting one of the end user stations. . . " (*id.* at 49–50).

Patent Owner does not provide separate arguments for independent claim 22 but relies on the same arguments with respect to claims 1, 7, and 8. *See generally* PO Resp.

As discussed above with respect to claim 7, Petitioner maps the recited "storage device" to Ogdon's webservers 96 (Pet. 34), but then maps the recited "plurality of web servers" to the same webservers 96 (*id.* at 31–32), and thus, relies on each of Ogdon's webservers 96 retrieving the streamlet from itself. *Id.* Given that Petitioner relies on the same analysis from claim 7, we determine that Petitioner also has not shown by a preponderance of the evidence that this limitation also in claim 22 would have been obvious over the proposed combination of Ogdon and Allen. *See* above section II(C)(5)(ix)(e).

Further, as discussed with respect to claim 8, we find that Petitioner has not persuasively shown that Ogdon teaches "send[ing] the virtual timeline to the requesting one of the end user stations," as recited. Ex. 1001, 19:24–29; *see also* above section II(C)(5)(ix)(f). That is, we are not persuaded that Ogdon teaches the recited end user station requesting and receiving a virtual timeline also recited in claim 22.

We determine that Petitioner has not shown by a preponderance of the evidence that the subject matter of claim 22 would have been obvious over the proposed combination of Ogdon and Allen.

m. Claim 23

Claim 23 depends from claim 22 and is similar in scope to claim 7 depending from claim 1. *Compare* Ex. 1001, 21:44–63, *with id.* at 19:6–22. Petitioner relies on the same analysis for claims 1 and 7 that we have

discussed above. Pet. 50–52. Patent Owner does not provide separate arguments for independent claim 23 but relies on the same arguments with respect to claims 1 and 7. *See generally* PO Resp..

For the reasons discussed above, we are not persuaded by Petitioner's analysis for claim 22 from which claim 23 depends. *See* above section II(C)(5)(a)(ix)(e). We determine that Petitioner also has not shown by a preponderance of the evidence that the subject matter of claim 23 would have been obvious over the proposed combination of Ogdon and Allen..

n. Claims 24, 25, and 27

Claims 24, 25, and 27 depend from claim 22 but recite similar limitations set forth respectively in claims 5, 6, and 4. *Compare* Ex. 1001, 22:1–9, 12–13, *with id.* at 18:59–19:2. Petitioner relies on the same analysis for claims 4–6 that we have discussed above. Pet. 52. Patent Owner does not provide separate arguments for claims 24, 25, and 27. *See generally* PO Resp.

For the reasons discussed above, we are not persuaded by Petitioner's analysis for claim 22 from which claims 24, 25, and 27 depend. See above section II(C)(5)(a)(ix)(e). We determine that Petitioner also has not shown by a preponderance of the evidence that the subject matter of claims 24, 25, and 27 would have been obvious over the proposed combination of Ogdon and Allen...

m. Claim 28

Claim 28 recites "A process executable by a content player device to stream a video over a network from a server for playback of the video by the content player device," the process comprising:

> establishing one or more network connections between the content player device and the server,

> wherein the server accesses a plurality of streams including a low quality stream, a medium quality stream, and a high quality stream, wherein the low quality stream, the medium quality stream, and the high quality stream each comprise a group of streamlets encoded at a respective one of a plurality of different bitrates, each group comprising at least first and second streamlets, each of the streamlets corresponding to a portion of the video;
>
> wherein at least one of the low quality stream, the medium quality stream, and the high quality stream is encoded at a bitrate of no less than 600 kbps; and wherein the first streamlet of each of the groups of streamlets has the same first duration and encodes the same first portion of the video in the low quality stream, the medium quality stream, and the high quality stream, the first streamlet of the low quality stream having a different bitrate than the first streamlet of the high quality stream and the first streamlet of the medium quality stream;
>
> selecting, by the content player device, a currently selected one of the low quality stream, the medium quality stream, and the high quality stream based upon a determination by the end user station to select a higher or lower bitrate version of the video;
>
> placing a virtual time request over one or more internet connections from the one or more end user stations to retrieve a

Ex. 1001, 22:14–52. Claim 28 recites a "process executable by a content player device" which comprises steps similar to the steps executed by the processor of claim 14. *Compare* Ex. 1001, 22:18–52, *with id.* at 1001, 20:1–34. Petitioner refers to its analysis with respect to claim 14 for disclosing the limitations of claim 28. *See* Pet. 52–54; *see also* above section II(C)(5)(i)–(v), (ix)(i).

Patent Owner does not provide separate arguments for independent claim 28 but relies on the same arguments with respect to claims 1 and 14. *See generally* PO Resp..

For the same reasons discussed above with respect to claim 14, we are persuaded that the proposed combination of Ogdon and Allen teaches claim 28. *See supra* sections II(C)(5)(ix)(i). Our analysis regarding secondary considerations of nonobviousness discussed above for claim 1 applies equally to this claim. *See supra* section II(C)(5)(a)(vi). Thus, we determine that Petitioner has shown by a preponderance of the evidence that the subject matter of claim 28 would have been obvious over the proposed combination of Ogdon and Allen.

n. Claim 29

Claim 29 depends from claim 28 and is similar in scope to claim 15 depending from claim 14. *Compare* Ex. 1001, 22:53–62, *with id.* at 20:35–45. Petitioner relies on the same analysis for claims 15 that we have discussed above. Pet. 54. Patent Owner does not provide separate arguments for claim 29. *See generally* PO Resp.

For the same reasons discussed above, we are persuaded that the proposed combination of Ogdon and Allen teaches claim 29. *See* above section II(C)(5)(a)(ix)(i). Our analysis regarding secondary considerations of nonobviousness discussed above for claim 1 applies equally to this claim. *See* above section II(C)(5)(a)(vi). Thus, we determine that Petitioner has shown by a preponderance of the evidence that the subject matter of claim 29 would have been obvious over the proposed combination of Ogdon and Allen.

xii. Ground 1 Conclusion

Based on the complete record presented, we are persuaded that Petitioner has demonstrated that the subject matter of claims 1, 2, 4–6, 10–12, 14–19, 21, 28, and 29 would have been obvious over Ogdon and Allen.

b. Obviousness of Claims over Ogdon, Allen, and SMIL 2.0 (Ground 2).

In ground 2, Petitioner alternatively relies on the combination of Ogdon, Allen, and SMIL 2.0 for teaching the limitations recited in claims 1, 2, 4–12, 14–19, 21–25, and 27–29. Pet. 54–58. Patent Owner disputes Petitioner's contentions. PO Resp. 48–52; PO Sur-reply 20–21.

We have already determined that Petitioner has shown, by a preponderance of the evidence, that the subject matter of claims 1, 2, 4–6, 10–12, 14–19, 21, 28, and 29 would have been obvious over the proposed combination of Ogdon and Allen. Thus, we do not reach Petitioner's challenges of these claims based on the combination of Ogdon, Allen, and SMIL 2.0. *See SAS Inst. Inc. v. Iancu*, 138 S. Ct. 1348, 1359 (2018) (holding a petitioner "is entitled to a final written decision addressing all of the claims it has challenged"); *Bos. Sci. Scimed, Inc. v. Cook Grp. Inc.*, 809 F. App'x 984, 990 (Fed. Cir. 2020) (non-precedential) (recognizing that "[t]he Board has the discretion to decline to decide additional instituted grounds once the petitioner has prevailed on all its challenged claims"). Accordingly, we only address Petitioner's challenges in this ground for claims 7–9, 22–25, and 27.

2. Claims 7, 22–25, and 27

We determine above that Petitioner has not shown by a preponderance of the evidence that the subject matter of claims 7, 22–25, and 27 would have been obvious over the proposed combination of Ogdon and Allen. *See* above sections II(C)(5)(a)(ix)(e)(1)–(n). Our determination regarding claim 7 and claim 22, from which claims 23–25 and 27 depend, is based on a discrepancy in Petitioner's mapping whereby it maps both the recited

"storage device" and the recited "web server" to the same element in Ogdon, webserver 96. *Id.* Petitioner does not explain how Ogdon's webserver could "retrieve the requested first streamlet" from itself consistent with the claim language. *See id.*

Petitioner's further contentions based on SMIL 2.0 for these claims pertain to the "same first duration" and "virtual timeline" limitations. Pet. 54–58. They do not cure the deficiencies discussed above. Thus, we determine that Petitioner has not shown by a preponderance of the evidence that the subject matter of claims 7, 22–25, and 27 would have been obvious over the proposed combination of Ogdon, Allen, and SMIL 2.0.

3. Claims 8, 9, 22–25, and 27

We find above that Petitioner has not persuasively shown that Ogdon teaches the recited end user station requesting and receiving a virtual timeline, as is recited in claim 8 and 22. *See* above section II(C)(5)(a)(ix)(f), (l). In particular, we determined that Petitioner has not persuasively shown that Ogdon teaches the recited end user station requesting and receiving a virtual timeline. *See id.*

Building on its analysis from the Ogdon–Allen ground, Petitioner contends that SMIL 2.0 teaches a "virtual timeline" in the form of "a playlist of entire content files." Pet. 54–58. In particular, Petitioner cites SMIL 2.0's teaching of generating a playlist of entire content files, e.g., "vid2.mpg" followed by "vid3.mpg," using the "<seq>" element. *Id.* (citing Ex. 1006, 207). But these additional contentions characterize the recited virtual timeline itself; they do not cure the deficiencies in Petitioner's analysis for claim 8 in the Ogdon–Allen ground, which pertain to a failure to show how the end user station requests and receives a virtual timeline.

Thus, the same deficiencies remain in the instant ground for claims 8 and 22, as well as for claim 9, depending from claim 8, and claims 23–25, and 27, depending from claim 22. For these reasons, we determine that Petitioner has not shown by a preponderance of the evidence that the subject matter of claims 8, 9, 22–25, and 27 would have been obvious over the proposed combination of Ogdon, Allen, and SMIL 2.0.

D. Petitioner's Motion to Exclude

Petitioner moves to exclude several groupings of information under 37 C.F.R. § 42.64(c):[19] (1) Patent Owner's purported supplemental evidence comprising testimony from David R. Ericson at Exhibits 2090 and 2092; (2) portions of the deposition transcript of Dr. Houh at Exhibit 2091; (3) Patent Owner's citation to an Emmy website in its Sur-reply; and (4) a collection of email chains from non-declarants and third parties at Exhibits 2031–2033, 2049, 2057, 2071, 2078, 2079, and 2081. Exclude Mot. 1–2 & n.1. We consider the parties' arguments regarding these materials.

1. Exhibits 2090 (Ericson Declaration) and 2092 (Ericson Deposition Transcript)

Exhibit 2090 is a declaration of David R. Ericson that Patent Owner served on Petitioner as supplemental evidence on August 9, 2024. *See* Paper 22, 1. At the very least, this supplemental evidence relates to Petitioner's

[19] We note that certain aspects of Petitioner's motion to exclude would be characterized more precisely as a motion to strike. *See* Consolidated Trial Practice Guide at 80 (noting that a motion to strike is appropriate where a brief "raises new issues, is accompanied by belatedly presented evidence, or otherwise exceeds the proper scope of reply or sur-reply"). To the extent necessary, and as discussed below, we exercise our discretion to treat these aspects of Petitioner's motion to exclude as a motion to strike.

evidentiary objections for Exhibit 2063, which is an excerpt of Mr. Ericson's deposition transcript from the related ITC matter.[20] *See* Paper 20, 2. In response to Patent Owner's service of Exhibit 2090, Petitioner noticed and took the deposition of Mr. Ericson. *See* Paper 29. Notwithstanding, Petitioner never ultimately moved to exclude Exhibit 2063, the underlying evidence to which Petitioner objected.

Despite there being no motion to exclude Exhibit 2063, Patent Owner filed Mr. Ericson's declaration as Exhibit 2090 and a transcript of Mr. Ericson's deposition as Exhibit 2092 with Patent Owner's opposition to Petitioner's motion to exclude. *See* Exclude Opp. 8 n.4, 13 n.7. As such, Petitioner moves to exclude Exhibits 2090 and 2092 because, *inter alia*, this evidence is moot given the lack of a motion to exclude for Exhibit 2063. Exclude Mot. 2 n.1;[21] Exclude Reply 3. Patent Owner argues that Petitioner is seeking to suppress the supplemental evidence, and Patent Owner contends we should infer the evidence is unfavorable to Petitioner. Exclude Opp. 8 n.4, 13 n.7; *see also* PO Sur-reply 23 n.6 (similar argument).

We agree with Petitioner that Patent Owner's filing of Exhibits 2090 and 2092 purportedly as supplemental evidence is improper given that Petitioner never moved to exclude the underlying evidence to which Petitioner objected, which is Exhibit 2063. "Supplemental evidence . . . is filed only in support of an opposition to a motion to exclude." Consolidated

---

[20] At the oral hearing, Patent Owner asserted that this supplemental evidence also pertains to Petitioner's evidentiary objections to certain email exhibits. *See* Tr. 81:17–83:15. We reject that argument below.

[21] As noted by Patent Owner (Exclude Opp. 13 n.7), Petitioner misidentifies Exhibit 2063 as "Exhibit 2036" in its Motion to Exclude. *See* Exclude Mot. 2 n.1

Trial Practice Guide at 79; *see also* Rules of Practice for Trials Before the Patent Trial and Appeal Board and Judicial Review of Patent Trial and Appeal Board Decisions, 77 Fed. Reg. 48,612, 48,624 (Aug. 14, 2012) ("The Board will not ordinarily address an objection, unless the objecting party filed a motion to exclude under § 42.64(c), because the objection might have been cured or might prove unimportant in light of subsequent developments.").

Although Patent Owner filed Exhibits 2090 and 2092 with its opposition to Petitioner's motion to exclude, Patent Owner references these exhibits in relation to other evidentiary objections that are unrelated to Exhibit 2063. *See* Exclude Opp. 8 (mentioning, but not citing, Mr. Ericson's deposition in relation to Petitioner's evidentiary objections for certain emails), 12–14 (citing Mr. Ericson's deposition testimony in relation to Petitioner's evidentiary objections for an Emmy Award website citation). In this way, Patent Owner's filing and use of Exhibit 2090 and 2092 is not apt. Patent Owner could have, but did not, offer initial direct testimony from Mr. Ericson in this proceeding, and Patent Owner instead chose to rely on the excerpt of his testimony from the ITC at Exhibit 2063 when it filed its Response.

After being challenged with evidentiary objections to Exhibit 2063, Patent Owner not only used the declaration at Exhibit 2090 to overcome the objections (*see*, *e.g.*, Ex. 2090 ¶ 5), but also sought to fill out the record on a number of other matters that are not mentioned in the ITC transcript. *See*, *e.g.*, *id.* ¶¶ 8 (testimony regarding 2020 SlingTV Emmy award), 16 (testimony regarding commercial success with respect to "Disney, FOX, and Discovery"), 18 (testimony regarding Microsoft's "Smooth Streaming"

solution). Some of these topics—most particularly the 2020 SlingTV Emmy award—came up in the subsequent deposition taken by Petitioner. At that time, Mr. Ericson recalled another, different 2006 Emmy award for ABC.com. *See* Ex. 2092, 131:20–132:11. Subsequently, Patent Owner sought to use Mr. Ericson's testimony about the 2006 ABC.com Emmy award as new evidence of objective indicia of nonobviousness. *See* Exclude Opp. 12–15 (arguing the merits of Patent Owner's evidence of objective indicia based in part on Mr. Ericson's deposition testimony); PO Sur-reply 22–23 (citing Patent Owner's counsel reading Mr. Ericson's deposition testimony during the deposition of Dr. Houh). This goes far beyond the intended use of the supplemental evidence process, which is to provide an opportunity for a party to cure an evidentiary objection. *See* 37 C.F.R. § 42.64(b)(2).

Furthermore, we not agree with Patent Owner that Petitioner "opened the door" to new evidence (Exclude Opp. 13–14) by deposing Mr. Ericson on his declaration that was served as supplemental evidence. Petitioner had a right to cross-examine Mr. Ericson on his new declaration before deciding whether to move to exclude the underlying ITC testimony (Exhibit 2063) to which Petitioner objected. *See* 37 C.F.R. § 42.51(b)(1)(ii). The deposition was not a vehicle for Patent Owner to develop new and different evidence or for Patent Owner to advance its case-in-chief.[22] Once Petitioner decided not to move to exclude Exhibit 2063, neither the new declaration (Exhibit 2090) nor the deposition transcript (Exhibit 2092) was admissible.

[22] Again, Patent Owner could have prepared and filed a declaration from Mr. Ericson for this proceeding with its Response. It did not.

Finally, we have considered Patent Owner's assertion at the oral hearing that Mr. Ericson's declaration at Exhibit 2090 also was offered to respond Petitioner's objections regarding certain MOVE Networks emails. *See* Tr. 81:17–83:15. We find this assertion to be baseless. First, no part of Mr. Ericson's testimony addresses the emails, and no emails are cited in his declaration. *See generally* Ex. 2090. Second, Patent Owner provides no specific argument based on Mr. Ericson's declaration in its response to Petitioner's motion to exclude the emails. *See* Exclude Opp. 8 (merely mentioning the deposition of Mr. Ericson). Third, Patent Owner itself characterizes Mr. Ericson's declaration as "supplemental evidence following [Petitioner's] objection to EX2063." *Id.* at 13 n.7. Thus, Patent Owner's *ex post* rationale based on email objections is spurious.

For these reasons, we strike Exhibits 2090 and 2092 as being improperly filed supplemental evidence.[23]

2. Information Related to 2006 ABC.com Emmy Award

Petitioner moves to exclude two portions of Dr. Houh's second deposition transcript (Ex. 2091, 91:9–94:21, 104:23–106:14) as improper sur-reply evidence under 37 C.F.R. § 42.23(b). Exclude Mot. 10. Patent Owner cites these two deposition portions to support its contention that ABC.com won an Emmy award in 2006. PO Sur-reply 22–23 (citing Ex. 2091, 94:8–21, 105:16–106:14). Petitioner also asks us to disregard Patent Owner's Sur-reply arguments based on this evidence. Exclude Mot. 10.

[23] Although we strike certain materials for purposes of rendering this Decision, we nonetheless maintain a complete record of the evidence to facilitate review.

Petitioner explains that the two portions of the deposition transcript comprise Patent Owner's "counsel paraphrasing and quoting from an unadmitted document into the record." Exclude Mot. 10. Petitioner also moves to exclude a citation to an Emmy website that is introduced for the first time in Patent Owner's Sur-reply. *Id.* at 12 (citing PO Sur-reply 25 n.7). This citation relates to Patent Owner's argument that "ABC's use of MOVE's technology resulted in an Emmy Award in 2006, shortly after the priority date of the challenged patent." PO Sur-reply 24–25.

Patent Owner argues that the details surrounding the 2006 Emmy award are admissible because they were elicited by Petitioner during cross-examination of Mr. Ericson. Exclude Opp. 12. Patent Owner also argues that Petitioner and Dr. Houh attempted to undercut Patent Owner's proffered evidence about a 2020 Emmy award by suggesting that the award is attributable to unclaimed features. *Id.* (citing Pet. Reply 25).[24] As such, Patent Owner states that it "raised the 2006 Emmy at Dr. Houh's deposition in direct response to [Petitioner's] mischaracterizations of the technology driving MOVE's and Sling TV's industry praise." *Id.*

We agree with Petitioner that Patent Owner's allusions to the alleged 2006 ABC.com Emmy award amount to improper argument for a sur-reply under 37 C.F.R. § 42.23(b). Patent Owner could have, but did not, cite the 2006 award in its Response as evidence of secondary considerations of nonobviousness. Instead, Patent Owner attempts to place the 2006 Emmy award at issue in its Sur-reply simply because Petitioner allegedly

[24] Patent Owner mistakenly cites Petitioner's Reply at page 29, but the context makes clear that Patent Owner intended to cite to page 25.

"attempted to undercut the 2020 Emmy."[25] Exclude Opp. 12. However, ABC.com's 2006 award is wholly different from SlingTV's 2020 award. The only connection between the two is that they both appear to be Emmy awards for similar technology. In other words, we do not understand how assertions about the 2006 award could be deemed responsive to arguments made against the 2020 award. *See* 37 C.F.R. § 42.23(b) ("A sur-reply may only respond to arguments raised in the corresponding reply."). Thus, we find Patent Owner's allusions to the 2006 award to be "a new direction with a new approach as compared to the positions taken in a prior filing." Consolidated Trial Practice Guide at 74.

Further, Patent Owner's questioning regarding the 2006 ABC.com Emmy award during Dr. Houh's second deposition amounts to an awkward and improper attempt by Patent Owner to avail itself of 37 C.F.R. § 42.23(b)'s safe haven for "deposition transcripts of the cross-examination of any reply witness." The portion of testimony at issue comprises Patent Owner's counsel asking Dr. Houh about Mr. Ericson's deposition testimony. *See* Ex. 2091, 92:2–15 (Patent Owner's counsel presenting Dr. Houh with "Exhibit 5," which he represents as "a deposition of Dave Ericson taken in these proceedings"). During the line of questioning, Dr. Houh never testifies as to any personal knowledge or previous consideration of Mr. Ericson's

[25] Contrary to Patent Owner's assertions (Exclude Opp. 12), we do not discern any particular reply argument by Petitioner or Dr. Houh that "attempted to undercut the 2020 Emmy." Instead, the passage cited by Patent Owner is general argument related to "any supposed commercial success, long-felt need, or surprising results." Pet. Reply 25. Still, we assume for purposes of this analysis that Petitioner directly sought to "undercut the 2020 Emmy."

testimony. *See id.* at 104:23–105:6. Instead, Patent Owner's counsel merely paraphrased Mr. Ericson's testimony and asked Dr. Houh if he saw the testimony in the transcript. *See id.* at 93:4–5 ("[T]he reference is an Emmy. Do you see that?"), 93:21–23 ("[Y]ou see that Mr. Ericson says the Emmy was awarded in 2020, correct?"), 94:10–12 ("[D]o you see that Mr. Ericson in an answer begins describing an Emmy award that ABC won?"), 94:14–16 ("And do you see he says the Emmy was for ABC.com that was obviously using Move's technology?"). We decline to allow new sur-reply evidence of the 2006 Emmy award simply because Patent Owner uses Dr. Houh as a mouthpiece for such evidence. Thus, we strike these portions of Dr. Houh's deposition (Ex. 2091, 91:9–94:21, 104:23–106:14) as improper sur-reply evidence and the related portions of the Sur-reply (PO Sur-reply 22–23) as improper sur-reply argument.

Petitioner also moves to exclude a citation to the Emmy website that appears in a footnote of Patent Owner's Sur-reply in support of Patent Owner's arguments about the 2006 Emmy award. Exclude Mot. 1, 12 (citing PO Sur-reply 24 n.7). In particular, Petitioner argues that the cited website is not an exhibit in this proceeding and that it is part of Patent Owner's improper sur-reply argument under 37 C.F.R. § 42.23(b). *Id.* at 12. We agree with Petitioner for reasons similar to those above. In particular, Patent Owner's allusions to the 2006 Emmy award amount to improper sur-reply argument. In addition, the cited Emmy website is not an exhibit; we only consider evidence filed in the form of an exhibit. *See* 37 C.F.R. § 42.63(a). Thus, we strike Patent Owner's reference to the Emmy website (PO Sur-reply 24 n.7) and do not consider the website as part of this Decision.

3. Information Related to Microsoft M.Show Commercial Product

Petitioner moves to exclude another portion of Dr. Houh's second deposition transcript (Ex. 2091, 21:16–24:4) as improper sur-reply evidence under 37 C.F.R. § 42.23(b). Exclude Mot. 7–8. Patent Owner cites this portion to support an argument related to a Microsoft product known as M.Show. PO Sur-reply 8 (citing Ex. 2091, 21:16–24:4). Petitioner contends that the cited testimony amounts to Patent Owner's "counsel reading from an unadmitted document during Dr. Houh's deposition while asking Dr. Houh repeatedly, '[d]o you see that?'" Exclude Mot. 7 (citing Ex. 2091, 22:16–24:4). Petitioner also asks us to exclude this portion of Dr. Houh's deposition transcript under various Federal Rules of Evidence. *Id.* at 8–9. Petitioner additionally asks us to disregard Patent Owner's Sur-reply arguments based on this deposition testimony. Exclude Mot. 8.

Patent Owner argues that this portion of the deposition related to Patent Owner "challeng[ing] Dr. Houh's opinions" about M.Show (*see* Ex. 1028 ¶ 44) "by confronting him with contradictory evidence during his deposition." Exclude Opp. 10–11.

In rendering this Decision, we rely on neither Dr. Houh's testimony elicited by Patent Owner's counsel using the unadmitted exhibit (Ex. 2091, 21:16–24:4), nor Dr. Houh's underlying testimony to which it allegedly relates (Ex. 1028 ¶ 44). Thus, we dismiss as moot Petitioner's motion to exclude this portion of Dr. Houh's second deposition transcript and the related argument in the Sur-reply.

4. Exhibits 2031–2033, 2049, 2057, 2071, 2078, 2079, and 2081

Petitioner moves to exclude Exhibits 2031–2033, 2049, 2057, 2071, 2078, 2079, and 2081 under various Federal Rules of Evidence. Exclude Mot. 3–6. According to Patent Owner, these exhibits are confidential business records that consist of "e-mails between executives from MOVE [Networks] and Microsoft or Level 3 Communications." Exclude Opp. 5, 9. Patent Owner cites Exhibits 2031–2033, 2049, and 2057 in support of its assertions of long-felt need (*see*, *e.g.*, PO Resp. 56–57), commercial success (*see*, *e.g.*, *id.* at 61), and copying (*see*, *e.g.*, *id.* at 63). As noted by Petitioner (Exclude Mot. 5), Exhibits 2071, 2078, 2079, and 2081 are only cited in Dr. Jeffay's declaration in support of Patent Owner's assertions of various secondary considerations of nonobviousness. *See* Ex. 2006 ¶¶ 219, 221, 223.

We have determined that certain challenged claims are unpatentable despite this evidence. *See* above section II(C)(5). Under these circumstances, we find the better course of action is to maintain a complete record of the evidence to facilitate review rather than to exclude these exhibits. Thus, we dismiss as moot Petitioner's motion to exclude Exhibits 2031–2033, 2049, 2057, 2071, 2078, 2079, and 2081.

III. CONCLUSION[26]

[26] Should Patent Owner wish to pursue amendment of the challenged claims in a reissue or reexamination proceeding subsequent to the issuance of this decision, we draw Patent Owner's attention to the April 2019 Notice Regarding Options for Amendments by Patent Owner Through Reissue or Reexamination During a Pending AIA Trial Proceeding. *See* 84 Fed. Reg. 16,654 (Apr. 22, 2019). If Patent Owner chooses to file a reissue application or a request for reexamination of the challenged patent, we remind Patent

For the foregoing reasons, we determine on the record at hand that Petitioner has demonstrated by a preponderance of the evidence that challenged claims 1, 2, 4–6, 10–12, 14–19, 21, 28 and 29 of the '680 patent are unpatentable. We also determine on the record at hand that Petitioner has not demonstrated by a preponderance of the evidence that challenged claims 7–9, 22–25, and 27 of the '680 patent are unpatentable.

Claims	35 U.S.C. §	Reference(s)/Basis	Claims Shown Unpatentable	Claims Not Shown Unpatentable
1, 2, 4–12, 14–19, 21–25, 27–29	103	Ogdon, Allen	1, 2, 4–6, 10–12, 14–19, 21, 28, 29	7–9, 22–25, 27
1, 2, 4–12, 14–19, 21–25, 27–29	103	Ogdon, Allen, SMIL 2.0	1, 2, 4–6, 10–12, 14–19, 21, 28, 29	7–9, 22–25, 27
Overall Outcome			1, 2, 4–6, 10–12, 14–19, 21, 28, 29	7–9, 22–25, 27

IV. ORDER

For the reasons given, it is

ORDERED that, based on the preponderance of the evidence, claims 1, 2, 4–6, 10–12, 14–19, 21, 28, and 29 of the '680 patent have been shown

---

Owner of its continuing obligation to notify the Board of any such related matters in updated mandatory notices. *See* 37 C.F.R. § 42.8(a)(3), (b)(2).

to be unpatentable;

FURTHER ORDERED that claims 7–9, 22–25, and 27 of the ’680 patent have not been shown to be unpatentable;

FURTHER ORDERED that, in response to Petitioner’s Motion to Exclude (Paper 49), the following materials are stricken from the record: (1) Exhibits 2090 (Ericson Declaration) and 2092 (Ericson Deposition Transcript); (2) Testimony elicited from Dr. Houh regarding a 2006 ABC.com Emmy award (Ex. 2091, 91:9–94:21, 104:23–106:14) and related argument in Patent Owner’s Sur-reply (PO Sur-reply 22–23); and (3) Patent Owner’s reference to the Emmy website in Patent Owner’s Sur-reply (PO Sur-reply 24 n.7);

FURTHER ORDERED that Petitioner’s Motion to Exclude (Paper 49) is dismissed as moot in all other respects; and

FURTHER ORDERED that, because this is a final written decision, parties to this proceeding seeking judicial review of our decision must comply with the notice and service requirements of 37 C.F.R. § 90.2.

For PETITIONER:

Frank M. Gasparo
William A. Hector
VENABLE LLP
fmgasparo@venable.com
wahector@venable.com

Inge Osman
Tara Elliott
Richard Frenkel
Rebecca Rabenstein
Steven Peters
LATHAM & WATKINS LLP
inge.osman@lw.com
tara.elliott@lw.com
rick.frenkel@lw.com
rebecca.rabenstein@lw.com
steven.peters@lw.com

For PATENT OWNER:

Eliot Williams
George Guy
Ali Dhanani
Thomas Carter
BAKER BOTTS L.L.P.
eliot.williams@bakerbotts.com
hop.guy@bakerbotts.com
ali.dhanani@bakerbotts.com
thomas.carter@bakerbotts.com

Director_PTABDecision_Review@uspto.gov
571.272.7822

Paper 67
Date: August 28, 2025

UNITED STATES PATENT AND TRADEMARK OFFICE

BEFORE THE OFFICE OF THE UNDER SECRETARY OF COMMERCE FOR INTELLECTUAL PROPERTY AND DIRECTOR OF THE UNITED STATES PATENT AND TRADEMARK OFFICE

AYLO FREESITES LTD and FUBOTV MEDIA INC.,
Petitioner,

v.

DISH TECHNOLOGIES L.L.C.,
Patent Owner.

IPR2024-00043 (Patent 11,677,798 B2)
IPR2024-00044 (Patent 11,470,138 B2)
IPR2024-00045 (Patent 10,469,554 B2)
IPR2024-00046 (Patent 10,951,680 B2)
IPR2024-00146 (Patent 10,469,555 B2)[1]

Before COKE MORGAN STEWART, *Acting Under Secretary of Commerce for Intellectual Property and Acting Director of the United States Patent and Trademark Office.*

ORDER

---

[1] This order applies to each of the above-listed proceedings. fuboTV Media Inc. filed a petition in each of IPR2024-00901, IPR2024-00902, IPR2024-00903, IPR2024-00904, and IPR2024-00905, and has been joined as a petitioner to each of the above-listed proceedings.

The Office received a request for Director Review of the Final Written Decision in each of the above-captioned cases and an authorized response to each request. *See* Papers 64, 65.[2]

Having considered the requests and responses, it is:

ORDERED that the requests for Director Review are denied.

[2] Citations are to the record in IPR2024-00043. The parties filed similar papers in IPR2024-00044, IPR2024-00045, IPR2024-00046, and IPR2024-00146.

IPR2024-00043 (Patent 11,677,798 B2)
IPR2024-00044 (Patent 11,470,138 B2)
IPR2024-00045 (Patent 10,469,554 B2)
IPR2024-00046 (Patent 10,951,680 B2)
IPR2024-00146 (Patent 10,469,555 B2)

FOR PETITIONER:

Frank M. Gasparo
Ian G. Paquette
Philip T. Sheng
Parker G. Zimmerman
VENABLE LLP
fmgasparo@venable.com
igpaquette@venable.com
ptsheng@venable.com
pgzimmerman@venable.com

For PETITIONER (IPR2024-00901 Joined)

Inge Osman
Tara Elliott
Richard Frenkel
Rebecca Rabenstein
Steven Peters
LATHAM & WATKINS LLP
inge.osman@lw.com
tara.elliott@lw.com
rick.frenkel@lw.com
rebecca.rabenstein@lw.com
steven.peters@lw.com

For PATENT OWNER:

Eliot D. Williams
G. Hopkins Guy III
Ali Dhanani
Thomas B. Carter Jr.
Andrew Wilson
Jamie R. Lynn
BAKER BOTTS L.L.P.
eliot.williams@bakerbotts.com
hop.guy@bakerbotts.com

IPR2024-00043 (Patent 11,677,798 B2)
IPR2024-00044 (Patent 11,470,138 B2)
IPR2024-00045 (Patent 10,469,554 B2)
IPR2024-00046 (Patent 10,951,680 B2)
IPR2024-00146 (Patent 10,469,555 B2)

ali.dhanani@bakerbotts.com
thomas.carter@bakerbotts.com
andrew.wilson@bakerbotts.com
jamie.lynn@bakerbotts.com

Trials@uspto.gov
571-272-7822

Paper 69
Entered: October 6, 2025

UNITED STATES PATENT AND TRADEMARK OFFICE

BEFORE THE PATENT TRIAL AND APPEAL BOARD

AYLO FREESITES LTD and FUBOTV MEDIA INC.,
Petitioner,

v.

DISH TECHNOLOGIES L.L.C.,
Patent Owner.

IPR2024-00046
Patent 10,951,680 B2

Before THU A. DANG, MICHELLE N. WORMMEESTER, and
JOHN A. HUDALLA, *Administrative Patent Judges*.

DANG, *Administrative Patent Judge*.

DECISION
Denying Petitioner's Request for Rehearing of Final Written Decision
37 C.F.R. § 42.71(d)

I. INTRODUCTION

In response to a Petition (Paper 1, "Pet.") filed by Aylo Freesites Ltd ("Aylo"), we instituted *inter partes* review of claims 1, 2, 4–12, 14–19, 21–25, and 27–29 of U.S. Patent No. 10,951,680 B2 (Ex. 1001, "the '680 patent"). *See* Paper 8. fuboTV Media Inc. ("fuboTV") subsequently filed a similar petition and motion for joinder in IPR2024-00904. *See* IPR2024-00904, Papers 2, 3. We instituted an *inter partes* review and joined fuboTV as a petitioner to this proceeding in a limited capacity. *See* IPR2024-00904, Paper 7. Henceforth, we refer collectively to Aylo and fuboTV as "Petitioner."

During trial, DISH Technologies L.L.C. ("Patent Owner") filed a Response (Paper 18 ("PO Resp.")), to which Petitioner filed a Reply (Paper 37). In turn, Patent Owner filed a Sur-reply. Paper 47.

On April 14, 2025, we entered a Final Written Decision (Papers 60, 63[1], "Decision" or "Dec.") determining that Petitioner had shown claims 1, 2, 4–6, 10–12, 14–19, 21, 28, and 29 of the '680 patent to be unpatentable by a preponderance of the evidence, but had not shown claims 7–9, 22–25, and 27 of the '680 patent to be unpatentable by a preponderance of the evidence. In particular, we determined that Petitioner had not shown by a preponderance of the evidence that (1) the subject matter of claims 7–9, 22–25, and 27 is unpatentable over the combination of U.S. Patent No. 6,161,137 (Ex. 1004, "Ogdon") and International Patent Publication No. WO 02/075482 A2 (Ex. 1005, "Allen"); and (2) the subject matter of claims 7–9, 22–25, and 27 is unpatentable over the combination of Ogdon, Allen,

[1] Public version.

and Synchronized Multimedia Integration Language (SMIL 2.0) (Ex. 1006, "SMIL 2.0"). Dec. 64–71, 77–80.

On, May 14, 2025, Petitioner filed a Rehearing Request of our determination in the Decision of claim 7. Paper 64 ("Req. Reh'g"). In particular, Petitioner seeks reconsideration of our Decision of claim 7 for the reason that "the Board's finding [was] based on an erroneous claim construction," and that "the Board misapprehended the Petition's mappings and overlooked cited evidence from Ogdon." *Id.* at 1.

For the reasons discussed below, Petitioner has not demonstrated that we misapprehended its mappings and overlooked the cited evidence when determining that claim 7 was not unpatentable.

II. STANDARD OF REVIEW

A party requesting rehearing bears the burden of showing that the decision should be modified. 37 C.F.R. § 42.71(d) (2020). The party must identify specifically all matters we misapprehended or overlooked, and the place where each matter was previously addressed in a motion, an opposition, or a reply. *Id.* When reconsidering a decision, we review the decision for an abuse of discretion. 37 C.F.R. § 42.71(c). An abuse of discretion may be determined if a decision is based on an erroneous interpretation of law, if a factual finding is not supported by substantial evidence, or if the decision represents an unreasonable judgment in weighing relevant factors. *Star Fruits S.N.C. v. United States*, 393 F.3d 1277, 1281 (Fed. Cir. 2005); *Arnold P'ship v. Dudas*, 362 F.3d 1338, 1340 (Fed. Cir. 2004).

III. ANALYSIS

In the Petition, Petitioner challenged claims 1, 2, 4–12, 14–19, 21–25, and 27–29 as obvious over by Ogdon and Allen (Ground 1) and/or obvious over Ogdon, Allen, and SMIL 2.0 (Ground 2). Pet. 15–58. Claim 7 depends from claim 1 and recites that the system further comprises:

> a plurality of web servers located at different locations across the internet, each web server configured to:
>
> receive at least one streamlet request over one or more internet connections from one or more end user stations to retrieve the first streamlet storing a portion of the video, wherein the at least one streamlet request from the one or more end user stations includes a request for a currently selected first streamlet from one of the low quality stream, the medium quality stream, and the high quality stream based upon a determination by the end user station to select a higher or lower bitrate version of the streams;
>
> retrieve from the storage device the requested first streamlet from the currently selected one of the low quality stream, the medium quality stream, and the high quality stream; and
>
> send the retrieved first streamlet from the currently selected one of the different copies to the requesting one of the end user stations over the one or more network connections.

Ex. 1001, 19:3–22.

In the Petition, Petitioner mapped "plurality of web servers located at different locations across the internet" as recited in claim 7 to Ogdon's "webservers 96a and webserver 96b." Pet. 31–32 (citing Ex. 1004, 8:27–31). However, Petitioner also mapped the "storage device" from which webserver 96 retrieves the requested segment to Ogdon's webservers 96. *Id.* at 34 (citing Ex. 1004, 19:54–67 (client nodes "retrieve elements or subcollections from 'content servers 96'"); Fig. 2C (step 508 "the content webserver(s) 96 from which this next collection of segments can be retrieved").

In our Decision, we were not persuaded by Petitioner's analysis based on Ogdon regarding the following recitations in claim 7: "a plurality of web servers . . . each web server configured to" "retrieve from the storage device the requested first streamlet." Dec. 64–67.

As we explained in our Decision, Petitioner's analysis for claim 7 breaks down when it relies on "each of Ogdon's servers 96 retrieving the streamlet from 'content servers 96.'" Dec. 67. We found that "Petitioner does not provide any explanation as to how this could be interpreted in a coherent way consistent with Ogdon's teachings." *Id.*

Petitioner presents two major arguments in its Rehearing Request. First, Petitioner argues that "the Petition did not map 'the storage device' and the 'plurality of web servers' to the ***same*** element." Req. Reh'g 8. According to Petitioner, the Petition stated that "'Ogdon discloses that the webserver(s) 96,' i.e., the plurality of web servers, 'retrieve from the storage device' . . . 'the requested streamlet,'" wherein Petitioner now contends that the "storage device" is "the necessary hard disk or cache." *Id.* at 9 (citing Pet. 34; Ex. 19:54–67).

Second, Petitioner also argues that our finding of unpatentability regarding to claims 7 is "based on an erroneous claim construction of 'a plurality of servers configured to . . . retrieve from the storage device the requested first streamlet' limiting the claim to a particular embodiment disclosed in the patent." Req. Reh'g 1. In particular, Petitioner contends that, in contrast to Patent Owner's position, "Claim 7 is not limited to the proxy cache embodiment in the patent." *Id.* at 2 (citing PO Resp. 46–47 (quoting Ex. 1001, 7:3–6)).

We have considered Petitioner's arguments in the Rehearing Request. However, none of the arguments presented in the Rehearing Request

demonstrate a matter that the Board misapprehended or overlooked. 37 C.F.R. § 42.71(c).

A. Whether the Board Misapprehended Petitioner's Mappings and Overlooked Evidence

The Petition stated that Ogdon discloses "a plurality of servers . . . (webserver 96a and webserver 96b)" (Pet. 31), wherein "the webserver(s) (96) retrieve from the storage device the requested streamlet (segment)" (*id.* at 34). For "the storage device," the Petition references Ogdon's teaching that client nodes "retrieve elements or subcollections from 'content servers 96 where the presentation segments have been prestored'" and that "list of network 70 addresses (urls) of the content webserver(s) 96 from which this next collection of segments can be retrieved." *See* Pet. 34; Ex. 1004, 19:54–67: Fig. 2C.

In the Rehearing Request, Petitioner contends that "Petitioner did not cite these portions of Ogdon to argue that webservers 96 retrieve segments 'from themselves.'" Req. Reh'g 9. Rather, according to Petitioner, "Ogdon discloses that the webservers access a storage device to retrieve segments in response to client requests, and Petitioner's mapping to 'storage device' included both local storage devices at each of Ogdon's webservers as well as a central network accessible storage device." *Id.* (citing Pet. 34, 50–51; Ex. 1004, 9:30–31, claim 21).

However, Petitioner's argument that Ogdon's webservers store to a "local" or "network accessible" storage device (Req. Reh'g 9) appears for the first time in the Rehearing Request. That is, although the Rehearing Request cites to pages 50–51 of the Petition, and Ogdon at 9:30–31 and claim 21 (*id.*), these portions of the Petition and Ogdon were not cited in the Petition's arguments for claim 7. *See* Pet. 32–36 (arguments for claim 7).

Similarly, the Petition never discusses how Ogdon's webservers 96 may include a "necessary hard disk or cache" as a "storage device" as Petitioner argues for the first time in the Rehearing Request. Req. Reh'g 9.

As we pointed out in our Decision, the Petition mapped the "storage device" (from which the requested streamlet is retrieved) to Ogdon's "webservers 96." Dec. 67; *see* Pet. 34 (citing Ex. 1004, 19:54–67 (client nodes "***retrieve*** elements or subcollections ***from 'content webservers 96*** where the presentation segments have been pre-stored'") (emphasis added); FIG. 2C (step 508 "list of network 70 addresses (urls) of ***the content webserver(s) 96 from which*** this next collection of segments can be ***retrieved***") (emphasis added)). As such, we could not have misapprehended or overlooked the mapping newly presented in the Rehearing Request.

Since the Petition did not discuss a storage device that also includes central network accessible storage (*see* Pet. 34), the Petition also did not address ***how*** such a storage device might be located locally, centrally, or on a network storage as part of the interplay of the limitations recited in claim 7. *Id.* For example, the Petition did not address how any particular webserver 96 in Ogdon might retrieve a streamlet from the alleged "necessary hard disk or cache" located at any other (or perhaps even the same) webserver 96, as required by claim 7. Accordingly, as mentioned in the Decision, the Petition lacks a coherent explanation of Petitioner's intended mapping. *See* Dec. 67. We decline to entertain Petitioner's *ex post* rationales that are presented for the first time in a request for rehearing.

B. Whether the Board's Finding was Based on an Erroneous Claim Construction

Petitioner argues that we erred in adopting Patent Owner's claim construction limited to the proxy cache server embodiment of the '680

patent, in which the "'web servers' do not retrieve streamlets from their own storage devices but instead act as an intermediary, i.e., a proxy, that requests streamlets from a central storage device." Req. Reh'g 2 (citing PO Resp. 46–47; Ex. 1001, 7:3–6). Petitioner argues that this is merely an "***alternative***" arrangement. *Id.* According to Petitioner, claim 7 "simply requires each webserver to be configured to retrieve streamlets from a storage device," regardless of whether "it is the webserver's own storage device or remote from the respective webserver." *Id.* at 3.

We are not persuaded by Petitioner's arguments because our disposition of these claims was not based on Patent Owner's or any particular claim construction. In our Decision, our analysis was based on Petitioner failing to carry its burden of proof regardless of whether the claims are limited to an alternative embodiment. *See* Dec. 67. Thus, we need not, and did not, construe claim 7 relative to any particular embodiment. *See, e.g., Realtime Data, LLC v. Iancu*, 912 F.3d 1368, 1375 (Fed. Cir. 2019) ("The Board is required to construe 'only those terms . . . that are in controversy, and only to the extent necessary to resolve the controversy.'" (quoting *Vivid Techs., Inc. v. Am. Sci. & Eng'g, Inc.*, 200 F.3d 795, 803 (Fed. Cir. 1999))). As such, we could not have misapprehended or overlooked any matter or abused our discretion.

In our Decision, we found that Petitioner failed to explain how its claim mapping to Ogdon could be interpreted in a coherent way consistent with Ogdon's teachings. *See* Dec. 67. Thus, regardless of whether "it is the webserver's own storage device or remote from the respective webserver" (Req. Reh'g 3), as set forth in our Decision, Petitioner failed to explain how any claim mapping "storage device" to Ogdon could be interpreted in a coherent way. *See* Dec. 67.

IV. CONCLUSION

We deny Petitioner's Request for Rehearing because we determine that Petitioner has not met its burden to show that, in the Decision, the panel misapprehended or overlooked any matter or abused its discretion.

V. ORDER

It is

ORDERED that Petitioner's Request for Rehearing is *denied*.

For PETITIONER:

Frank M. Gasparo
William A. Hector
VENABLE LLP
fmgasparo@venable.com
wahector@venable.com

For PETITIONER (Joined IPR2024-00904)

Inge Osman
Tara Elliott
Richard Frenkel
Rebecca Rabenstein
Steven Peters
LATHAM & WATKINS LLP
inge.osman@lw.com
tara.elliott@lw.com
rick.frenkel@lw.com
rebecca.rabenstein@lw.com
steven.peters@lw.com

For PATENT OWNER:

Eliot Williams
George Guy
Ali Dhanani
Thomas Carter
BAKER BOTTS L.L.P.
eliot.williams@bakerbotts.com
hop.guy@bakerbotts.com
ali.dhanani@bakerbotts.com
thomas.carter@bakerbotts.com