INTERNATIONAL SEARCH REPORT

Internati pplication No
PCT/IB 03/06004

A. CLASSIFICATION OF SUBJECT MATTER
IPC 7 H04L29/06 H04N7/24

According to International Patent Classification (IPC) or to both national classification and IPC

B. FIELDS SEARCHED

Minimum documentation searched (classification system followed by classification symbols)
IPC 7 H04L H04N

Documentation searched other than minimum documentation to the extent that such documents are included in the fields searched

Electronic data base consulted during the international search (name of data base and, where practical, search terms used)

EPO-Internal, COMPENDEX, INSPEC, PAJ, IBM-TDB, WPI Data

C. DOCUMENTS CONSIDERED TO BE RELEVANT

Category °	Citation of document, with indication, where appropriate, of the relevant passages	Relevant to claim No.
X	US 2002/002708 A1 (ARYE RAM) 3 January 2002 (2002-01-03) abstract page 1, paragraph 5 paragraph '0012! - paragraph '0013! page 2, paragraph 16 - paragraph 24 page 3, paragraph 36 -page 4, paragraph 39 page 5, paragraph 54 - paragraph 58 page 6, paragraph 67 - paragraph 69 claims 1,13; figures 1,3,5 ---	1-20
X	US 6 148 005 A (PANCHA PRAMOD ET AL) 14 November 2000 (2000-11-14) abstract column 1, line 61 -column 2, line 42 column 5, line 63 -column 6, line 30 column 7, line 33 -column 8, line 38 claim 1; figure 3 --- -/--	1-20

[X] Further documents are listed in the continuation of box C.

[X] Patent family members are listed in annex.

° Special categories of cited documents :

"A" document defining the general state of the art which is not considered to be of particular relevance

"E" earlier document but published on or after the international filing date

"L" document which may throw doubts on priority claim(s) or which is cited to establish the publication date of another citation or other special reason (as specified)

"O" document referring to an oral disclosure, use, exhibition or other means

"P" document published prior to the international filing date but later than the priority date claimed

"T" later document published after the international filing date or priority date and not in conflict with the application but cited to understand the principle or theory underlying the invention

"X" document of particular relevance; the claimed invention cannot be considered novel or cannot be considered to involve an inventive step when the document is taken alone

"Y" document of particular relevance; the claimed invention cannot be considered to involve an inventive step when the document is combined with one or more other such documents, such combination being obvious to a person skilled in the art.

"&" document member of the same patent family

Date of the actual completion of the international search	Date of mailing of the international search report
15 March 2004	22/03/2004

Name and mailing address of the ISA	Authorized officer
European Patent Office, P.B. 5818 Patentlaan 2 NL - 2280 HV Rijswijk Tel. (+31-70) 340-2040, Tx. 31 651 epo nl, Fax: (+31-70) 340-3016	Niculiu, R

Form PCT/ISA/210 (second sheet) (July 1992)

DISH EXHIBIT 2002, Page 1001
Aylo Freesites Ltd. v. Dish Technologies L.L.C.
IPR2024-00047

INTERNATIONAL SEARCH REPORT

Internatio pplication No
PCT/IB 03/06004

C.(Continuation) DOCUMENTS CONSIDERED TO BE RELEVANT

Category °	Citation of document, with indication,where appropriate, of the relevant passages	Relevant to claim No.
X	DE 101 01 075 A (GAP FILMS COMMERCIAL PRODUCTIO) 25 July 2002 (2002-07-25) abstract column 2, paragraph 16 -column 3, paragraph 17 column 4, paragraph 34 -column 5, paragraph 35 column 5, paragraph 40 claims 1,3,10; figures 1,4 -----	1-20

DISH EXHIBIT 2002, Page 1002
Aylo Freesites Ltd. v. Dish Technologies L.L.C.
IPR2024-00047

INTERNATIONAL SEARCH REPORT

Information on patent family members

Internatio[illegible] [illegible]plication No
PCT/IB 03/06004

Patent document cited in search report		Publication date	Patent family member(s)			Publication date
US 2002002708	A1	03-01-2002	AU	6529701	A	08-01-2002
			CN	1439227	T	27-08-2003
			EP	1297705	A1	02-04-2003
			JP	2004502356	T	22-01-2004
			WO	0201874	A1	03-01-2002
			AU	7017601	A	08-01-2002
			EP	1305944	A2	02-05-2003
			WO	0201782	A2	03-01-2002
			US	2002009143	A1	24-01-2002
US 6148005	A	14-11-2000	NONE			
DE 10101075	A	25-07-2002	DE	10101075	A1	25-07-2002

DISH EXHIBIT 2002, Page 1003
Aylo Freesites Ltd. v. Dish Technologies L.L.C.
IPR2024-00047

(12) INTERNATIONAL APPLICATION PUBLISHED UNDER THE PATENT COOPERATION TREATY (PCT)

(19) World Intellectual Property Organization
International Bureau

(43) International Publication Date
15 May 2003 (15.05.2003)

PCT

(10) International Publication Number
WO 03/041413 A1

(51) International Patent Classification[7]: H04N 7/24

(21) International Application Number: PCT/GB01/04924

(22) International Filing Date:
5 November 2001 (05.11.2001)

(25) Filing Language: English

(26) Publication Language: English

(71) Applicant *(for all designated States except US)*: **PA CONSULTING SERVICES LIMITED** [GB/GB]; 123 Buckingham Palace Road, London SW1W 9SR (GB).

(72) Inventors; and
(75) Inventors/Applicants *(for US only)*: **DURRANT, Simon** [GB/GB]; 43 Withipoll Street, Ipswich, Suffolk IP4 2BZ (GB). **MULROY, Pat** [IE/GB]; 61 Cemetary Road, Ipswich, Suffolk IP4 2JA (GB). **YANG, Dekun** [CN/GB]; 24 Arreton Close, Leicester, Leicestershire LE2 3PP (GB).

(74) Agents: **DRIVER, Virginia, Rozanne** et al.; Page White & Farrer, 54 Doughty Street, London WC1N 2LS (GB).

(81) Designated States *(national)*: AE, AG, AL, AM, AT, AU, AZ, BA, BB, BG, BR, BY, BZ, CA, CH, CN, CO, CR, CU, CZ, DE, DK, DM, DZ, EC, EE, ES, FI, GB, GD, GE, GH, GM, HR, HU, ID, IL, IN, IS, JP, KE, KG, KP, KR, KZ, LC, LK, LR, LS, LT, LU, LV, MA, MD, MG, MK, MN, MW, MX, MZ, NO, NZ, PH, PL, PT, RO, RU, SD, SE, SG, SI, SK, SL, TJ, TM, TR, TT, TZ, UA, UG, US, UZ, VN, YU, ZA, ZW.

(84) Designated States *(regional)*: ARIPO patent (GH, GM, KE, LS, MW, MZ, SD, SL, SZ, TZ, UG, ZW), Eurasian patent (AM, AZ, BY, KG, KZ, MD, RU, TJ, TM), European patent (AT, BE, CH, CY, DE, DK, ES, FI, FR, GB, GR, IE, IT, LU, MC, NL, PT, SE, TR), OAPI patent (BF, BJ, CF, CG, CI, CM, GA, GN, GQ, GW, ML, MR, NE, SN, TD, TG).

Published:
— *with international search report*

For two-letter codes and other abbreviations, refer to the "Guidance Notes on Codes and Abbreviations" appearing at the beginning of each regular issue of the PCT Gazette.

(54) Title: ERROR CONTROL TO VIDEO ENCODER

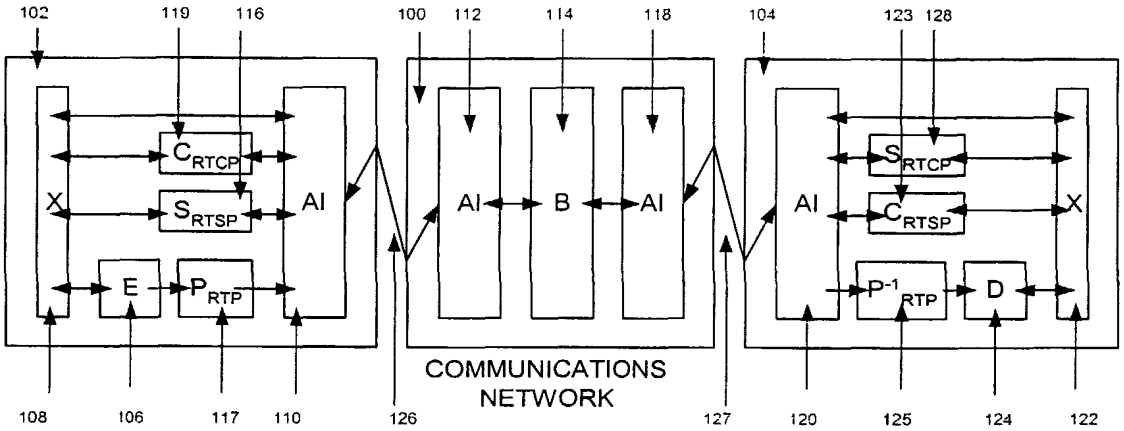

(57) Abstract: A method of generating a compressed video data stream (CVDS) from a video stream, for transmission from a transmitter to a receiver over a wireless channel within a communications network, the method including the steps of: (a) determining values of one or more error rate parameters associated with the wireless channel; (b) determining values of one or more bit rate parameters associated with the wireless channel; (c) calculating values of one or more encoding parameters using the values of the error rate parameters and the bit rate parameters; (d) controlling encoding of the video stream on the basis of the encoding parameters, thereby to generate the CVDS.

WO 03/041413 A1

ERROR CONTROL TO VIDEO ENCODER

FIELD OF THE INVENTION

The present invention relates to video streaming, and, more particularly, to the streaming of video data over a wireless communications network.

The invention has been developed primarily to allow video to be streamed in a UMTS or GPRS mobile telecommunications network using streamable formats such as MPEG-4 and H.263. However it will be appreciated by those skilled in the art that the invention is not limited to use with those particular standards

BACKGROUND TO THE INVENTION

Robust transmission of real time video data over wireless networks promises to be one of important applications of the wireless packet data services. Robustness is one of the key issues because a wireless network is a bandwidth-constrained as well as error-prone environment. Bandwidth constraint forces video data to be compressed into lower bit-rate video streams before it can be transmitted over a wireless mobile network. Channel errors in a wireless mobile network range from random bit errors to burst errors.

Existing video compression standards such as MPEG-4 and H.263 use three kinds of coding techniques: motion compensated prediction to encode temporal redundancy, Discrete Cosine Transform (DCT) with quantisation to encode spatial redundancy, and Variable-Length Code (VLC) for entropy encoding. These compression mechanisms are based on exploiting both the spatial dependency and temporal dependency which make the compressed video stream susceptive to any transmission errors. Both motion-compensation based predictive coding and VLC are sensitive to transmission errors. A single bit error can cause failure in VLC decoding. Use of predictive coding leads to error

propagation. Error resilient encoding is one of important issues in the reliable transmission of video data over noisy channels.

Existing video compression standards provide some error resilience to minimise the amount of data that has to be discarded whenever errors are detected: for example, the use of reversible VLC and the periodic insertion of resynchronisation markers so that the decoder regains synchronisation more quickly when transmission errors occur. Another mechanism is to increase the ratio of intra to inter-coding both at frame and block level to stop any residual error propagation at the expense of reducing the compression gain.

For real-time wireless streaming video applications, one of the key issues is how to achieve best possible encoding robustness under the bandwidth and time constraints of the wireless networks. Each wireless channel is associated with Quality of Service (QoS) parameters indicative of among other things the error rate parameters. During the transmission of video data between a transmitter and a receiver, QoS parameters vary with time randomly and asynchronously for the transmitter and the receiver. It is important for the transmitter to exploit wireless channel conditions and select appropriate error resilient mechanisms for successful end to end real time video transmission over the wireless channel.

It is the object of this invention to provide a method of making best use of error rate parameters associated with wireless channels for generating compressed video data stream with improved quality when transmitted over the wireless channels.

SUMMARY OF INVENTION

The present invention provides a method of generating a Compressed Video Data Stream (CVDS) for transmission from a transmitter to a receiver over a wireless channel within a communications network, the method including the steps of:

a) determining values of one or more error rate parameters associated with the wireless channel;
b) determining values of one or more bit rate parameters associated with the wireless channel;
c) calculating values of one or more encoding parameters using the values of the error rate parameters and the bit rate parameters;
d) controlling encoding of the video stream on the basis of the encoding parameters, thereby to generate the CVDS.

In accordance with the described embodiment of the present invention, a CVDS transmitter in a mobile handset comprises an encoder controller and a prior art video encoder. Preferably the video encoder has several adjustable encoding parameters for altering the degree of error resilience of the generated CVDS. The encoder controller ascertains the error rate parameters associated with the wireless channel between the transmitter and the receiver, and derives the encoding parameters for generating the CVDS with improved error resilience while meeting the bandwidth constraints of the wireless channel.

The basic idea underlying the present invention is to make best use of error rate parameters associated with the wireless channels for generating CVDS with improved quality when transmitted over said wireless channels. The encoder controller may ascertain the error rate parameters from several sources. In an embodiment of the invention where the transmitter is a mobile transmitter and the receiver is a network receiver, the encoder controller can ascertain the error rate parameters associated with the wireless channel between the transmitter and the network from the air interface. In another embodiment of the invention where the transmitter is a network transmitter and the receiver is a mobile receiver, the encoder controller can ascertain the error rate parameters associated with the wireless channel between the network and the receiver. In yet another embodiment of the invention where a mobile transmitter transmits CVDS to a mobile receiver, the encoder controller can ascertain the error rate parameters from the two sources described above. The end to end feedback from the receiver and the transmitter is used to convey the information related to the error rate parameters.

In a preferred embodiment of the invention, the CVDS is packetised into IP format packet before being sent to the transmitter air interface. The IP packet is constructed by three wrapping operations respectively: (1) wrapping the CVDS in an RTP format packet, (2) wrapping the RTP packet in a UDP format packet, and (3) wrapping the UDP packet in a IP format packet.

The present invention can apply to both unidirectional streaming arrangement and bidirectional conversational arrangement. In the streaming arrangement the end to end feedback of error rate parameters can be performed via an RTCP session or an RTSP session. RTCP packets are wrapped in UDP and further IP format. RTSP packets are wrapped in TCP format and further IP format packets. In the conversational arrangement the end to end feedback of error rate parameters can be performed via a SIP session. SIP packets are wrapped in UDP format and further IP format packets.

Preferably, the wireless networks are UMTS or GPRS mobile telecommunications networks. Each wireless channel is associated with Quality of Service (QoS) parameters indicative of among other things the error rate information. At session initiation and when wireless channel characteristics are to be modified, the network provides each mobile handset with a QoS parameter set that is indicative of the available bit rate, error rate conditions of the wireless channel between the mobile handset and the network. The QoS parameter set is read at the mobile handset by the encoder controller or the decoder controller. The error rate parameters are derived from the QoS parameters associated with the wireless channels.

In a preferred embodiment of the invention, the video data is divided into a sequence of frames, with each frame being further divided into a number of Group of Blocks (GOB) or a number of slices, and with each GOB or slice being further divided into a number of blocks. Preferably, the encoder parameters including frame rate, frame type indicative of either intra-coded frame or inter-coded frame, block type indicative of either intra-coded block or inter-coded block, and quantisation parameter.

According to the preferred embodiment, the error control of video encoding is achieved by a combination of the following operations:

a) setting proper ratio of intra-coded frames and inter-coded frames;
b) allocating GOBs or slices with suitable sizes such that the headers of GOBs or slices can be used as resynchronisation markers for the decoder to regain synchronisation quickly when transmission errors occur;
c) setting proper ratio of intra-coded blocks and inter-coded blocks for each GOB or slices in each inter-coded frame.

In a preferred embodiment of the invention, the rate control of video encoding operates in conjunction with the error control such that the generated CVDS is error resilient as well as within the bit rate budget associated with the channel bandwidth. Preferably, the encoder controller performs the rate control based on the derived parameters of the error control and the current encoding status information (e.g. instantaneous bit rate generated by the encoder and the motion estimation). The rate control is used for:

a) setting proper frame rate;
b) setting proper quantisation parameters;

such that the generated CVDS can match the bit rate constraints of the wireless channels.

In an embodiment of the present invention, the CVDS comprises a plurality of layers including the base layer and enhanced layers in which each layer comprises a sequence of frames which may be of the same type (intra-coded or inter-coded) or a mixture of types. Each layer can be carried via an RTP session. Preferably, more than one wireless channels are available and each wireless channel is used to transmit an RTP session. In this embodiment, in conjunction with the above error control operations, the error control also includes mapping CVDS layers into wireless channels such that the base layer is mapped into the wireless channel with better transmission quality.

BRIEF DESCRIPTION OF DRAWINGS

Preferred embodiments of the invention will now be described, by way of example only, with reference to the accompanying drawings, in which:

Figure 1 is a simplified schematic diagram of a UMTS communication system showing a network and two mobile handsets, where one handset is the transmitter and the other a receiver, for streaming video;

Figure 2 is a simplified schematic diagram of a UMTS communication system showing a network and two mobile handsets, where each handset is simultaneously a transmitter and a receiver for conversational video;

Figure 3 shows the construction of a UDP/IP packet containing MPEG-4 video payload data;

Figure 4 shows the construction of a UDP/IP packet containing RTCP data;

Figure 5 shows the construction of multiple substreams with a common IP address and different UDP addresses per substream;

Figure 6 shows the construction of a TCP/IP packet containing RTSP and SDP data;

Figure 7 shows the construction of a TCP/IP packet containing SIP and SDP data;

Figure 8, Figure 10 and Figure 12 show single and multiple RTP/RTCP sessions and an RTSP session (also labelled more generically as IP Sessions), mapped onto single and multiple wireless channels for streaming video;

Figure 9, Figure 11 and Figure 13 show single and multiple RTP/RTCP sessions and a SIP session (also labelled more generically as IP Sessions), mapped onto single and multiple wireless channels for conversational video;

Figure 14 shows Quality of Service (QoS) parameters associated with the wireless channels between mobile handsets and networks, and the sending of these and other QoS parameters between the mobile handsets via IP sessions for streaming video;

Figure 15 shows QoS parameters associated with the wireless channels between mobile handsets and networks, and the sending of these and other QoS parameters between the mobile handsets via IP sessions for conversational video;

Figure 16 and Figure 17 shows typical mapping of compressed video data stream frames onto base and enhanced substreams;

Figure 18 is a flowchart showing sequential operations performed by the encoder controller;

Figure 19 is a flowchart showing sequential operations performed by the decoder controller; and

Figure 20 is a flowchart showing sequential operations performed by the encoder.

DETAILED DESCRIPTION OF PREFERRED AND OTHER EMBODIMENTS

The preferred embodiment of the present invention is applied to a network and associated mobile handsets designed to operate under the current GPRS or proposed UMTS standard.

Referring to the drawings, and Figure 1 in particular, there is shown a UMTS network 100 that is used to establish an end to end link between a first mobile handset 102 and a second mobile handset 104. The communication session between the first mobile handset 102 and the second mobile handset 104 is unidirectional. Mobile handset 102 is acting solely as a transmitter of compressed video data, whilst mobile handset 104 is acting solely as a receiver of compressed video data. This is termed the streaming arrangement.

In the embodiment shown in Figure 2, the communication session between the first mobile handset 142 and the second mobile handset 144 is bi-directional. Mobile handset 142 is acting both as a transmitter and a receiver of compressed video data, and mobile handset 144 is also acting as a transmitter and receiver of compressed video data. This is termed the conversational arrangement. In Figure 2 the functions and operations of the second mobile handset 144 are identical to the functions and operations of the first mobile handset 142.

It will be appreciated that the transmitter function and operation of mobile handsets 142 and 144 is identical to that of the transmitter function and operation of mobile handset 102. It will also be appreciated that the receiver function and operation of mobile handsets 142 and 144 is identical to that of the receiver function and operation of mobile handset 104. In the case of mobile handsets 142 and 144, the receiver and transmitter functions and operations are present within

the same mobile handset. In mobile handsets 102 and 104 only the transmitter or the receiver function is present respectively. It will be appreciated that the mobile handsets 142 and 144 can also operate exclusively as transmitters or receivers to produce the streaming arrangement, in addition to their conventional conversational arrangement, if so configured.

In Figure 1 the first mobile handset includes a transmitter controller 108, a Real Time Streaming Protocol (RTSP) server 116, an encoder 106, a Real Time Protocol (RTP) packetiser 117, a Real Time Control Protocol (RTCP) client 119 and a transmitter air interface 110, which are operatively interconnected with each other as shown. The encoder 106 accepts raw video data (RVD) from a video source such as a camera (not shown) associated with the first mobile handset 102 and encodes it into a compressed video data stream (CVDS) format, as discussed in detail below. This is then packetised by the RTP packetiser 117. According to the normal operation of a mobile communications network, the transmitter air interface 110 establishes a wireless channel with a transmit side air interface 112 in the network 100, which in turn is in communication with a network backbone 114.

The network 100 also includes a receive side air interface 118 that establishes a wireless channel with a receiver air interface 120 disposed in the second mobile handset 104. The second mobile handset 104 also includes a receiver controller 122, an RTSP client 123, an RTP depacketiser 125, an RTCP server 128 and a decoder 124. These are operatively interconnected with each other as shown.

In Figure 2 the mobile handsets 142 and 144 includes all the components that are present in both the mobile handset 102 for the transmitter function, with the exception of the RTSP server 116, and the mobile handset 104 for the receiver function, with the exception of the RTSP client 123. The RTSP server 116 is replaced by a SIP User Agent (UA) 146 in mobile handset 142 and the RTSP client 123 is replaced by a SIP UA 148 in mobile handset 144. The components of the transmitter function, the components of the receiver function, the User Agent and the air interface for mobile handsets 142 and 144 are operatively interconnected with each other as shown. It will be appreciated that

the function and operation of the mobile communications network shown in Figure 2 is as above.

In a UMTS network, the mobile handsets 102, 104, 142 and 144 are designated User Equipment (UE), the air interface elements 112 and 118 correspond to the Universal Terrestrial Radio Access Network (UTRAN), the backbone element 114 corresponds to the Core Network (CN).

According to normal mobile communications network operation, an end to end link is established between the first and second mobile handsets 102, and 104 (or 142 and 144), comprising a first wireless channel 126 between the first mobile handset and the network and a second wireless channel 127 between the network and the second mobile handset. Wireless channels are established using different frequencies and/or spreading codes and/or time slots in a manner well known in the mobile communications art. They allow for bi-directional communication, both for data and control information.

As part of the wireless channel control information, the wireless channel 126 between the transmitter air interface 110 and the transmit side air interface 112 carries Quality of Service parameters (QoS), from the network 100 to the first mobile handset 102 (or 142). Similarly, the wireless channel 127 between the air interface 118 and the receiver side air interface 120 carries Quality of Service parameters (QoS), from the network 100 to the second mobile handset 104 (or 144).

The packetised CVDS is transmitted over the end to end link defined between the two mobile handsets 102 and 104 (or 142 and 144), across wireless channels 126 and 127. In the preferred embodiment, the CVDS takes the form of an MPEG-4 stream, but other suitable streaming formats, such as H.263 can also be used. Both of these standards are applicable to variable bitrate and low bitrate video, e.g. bitrates of 10kbps or higher. It is particularly preferred that the transmission be in RTP format, as discussed in detail below in relation to Figure 3, Figure 4, Figure 5.

Turning to Figure 3, the packetisation of the raw MPEG-4 data for transmission is shown. This packetisation takes place in the first mobile handset 102 or 142 under the control of the transmitter controller 108 before sending the

packets to the transmitter air interface 110. Upon emerging from the wireless network of the transmitter the packets travel over a packet switched network to the wireless network of the receiver. Here the packets are sent to the receive side air interface 118 and on to the second mobile handset 104 or 144 via wireless channel 127.

Figure 3 shows the packetisation layers for a single MPEG-4 packet 200 in the form in which it leaves the encoder 106. It will be appreciated that a stream of such packets will be generated from the incoming RVD. The MPEG-4 video data 200 is wrapped in an RTP format packet layer 201. This, in turn, is wrapped in a UDP format packet layer 202, which in turn is packetised into an Internet Protocol (IP) packet 203. It is this IP packet 203 that is presented by the RTP packetiser 117 to the transmitter air interface 110 for transmission over the wireless channel. This layering format, defined by IETF, is known and is included in the developing UMTS standard for video transmission.

Each of the packetisation layers of the packet is directed to a particular part of the overall communication. They will not be described in detail because they are already known in the art and conform to the respective standards. However the principal component of each packet will be described insofar as is necessary to understand the embodiments of the invention that follow.

The MPEG-4 layer 200 contains the coded video data. The RTP layer 201 contains sequence numbers, time stamps, and payload bits that enable a depacketiser and decoder to decode it and replay at the correct time and in the correct sequence in relation to other packets from the same stream. The UDP layer is used for asynchronous communication of the data over the wireless communications channel and is a "best effort" connectionless protocol. The IP packet 203 contains an IP address which identifies the mobile receiver 104 or 144 as the destination. The IP packet header may also contain a Differentiated Services Code Point (DSCP) which could be used by a diffserv-enabled core network to determine how that packet should be forwarded by nodes inside that network.

Figure 4 shows the packetisation layers for a single RTCP packet 205 in the form in which it leaves the RTCP server 128. The RTCP packet is wrapped in a UDP format packet layer 206, and packetised into an IP packet 207.

Turning to Figure 5, the CVDS can be transmitted over the wireless channels in one or multiple substreams, each transported by an RTP session, (and an associated RTCP session) where these are mapped to one or multiple wireless channels that may have different quality parameters. In this case the IP address 208 is common to both substreams. Routing through the transmission chain is achieved by characterising different substreams by different socket numbers 210 and 212 in the UDP address.

It will be understood that some of the receiving handsets, or, indeed, the transmitting handset may not be capable of forming a multi wireless channel connection with the network. This may be because of equipment incompatibilities or network resource issues, for example. In this case, it is still possible for the video layers to be allocated to multiple wireless channels in accordance with the above embodiment, whilst multiplexing the video onto a single wireless channel for those not capable of forming the requisite multi wireless channel connection.

In the streaming arrangement of Figure 1, the IP packet of Figure 3 is transmitted directly from the first mobile handset 102, via the network 100, to the second mobile handset 104.

Once received at the receiver air interface 120, the packets are forwarded to the RTP depacketiser 125, where the MPEG-4 data 200 is re-constructed. The packets must be re-ordered using RTP layer data 201 such as frame timestamps and the data from the plurality of substreams must be re-assembled. The re-constructed MPEG-4 data 200 is then sent from the RTP depacketiser 125 to the decoder 124, where it is decoded for replay on, for example, a visual display (not shown) on the second mobile handset 104.

In the return direction (i.e., from the second mobile handset 104 to the first mobile handset 102 in this example), control information is returned in accordance with the known RTCP and RTSP protocols, with the latter using the known Session Description Protocol (SDP).

Figure 8 and Figure 10 show the IP sessions between a streaming server and client. The RTCP sessions provide feedback on the data transmission quality for each RTP session. RTSP additionally provides an overriding control connection from RTSP client 123 to RTSP server 116, using SDP to provide a description of the connection between client and server. It is known in the art that, when a session changes, an RTSP control packet containing a new SDP packet is sent to the remote entity.

The packetisation of the SDP and RTSP information is shown in Figure 6. The SDP information 306 is wrapped in an RTSP packet 300. An RTSP packet 300 is wrapped in a Transport Control Protocol (TCP) packet 302, which is within an IP packet 304. This packet is built up by the RTSP client 123 and supplied to the receiver air interface 120 for transmission to the receive side air interface 118 of the network 100. The destination address of this RTSP packet is that of the first mobile handset 102.

In the preferred embodiment shown in Figure 1, the RTSP packet passes to the transmit side air interface 112 via the backbone 114 for transmission to the transmitter air interface 110, to the RTSP server 116 and thence to the transmitter controller 108. Also, control information is exchanged between both mobile handsets 102 and 104 in accordance with the known RTCP protocol.

In the conversational arrangement of Figure 2 the IP packet of Figure 3 is transmitted and received between the mobile handsets 142 and 144, via the network 100, in the same way as for the streaming arrangement described above. The encoded video packet is also processed in the same way as for the streaming arrangement described above.

For the control of bi-directional communications sessions the Session Initiation Protocol (SIP) is used instead of RTSP. This is managed by user agents 146 and 148 in mobile handsets 142 and 144 respectively. SIP uses SDP to provide a description of the connection between two peer user agents. It is known in the art that, when a session changes, a SIP control packet containing a new SDP payload is sent to the peer user agent.

Figure 9 and Figure 11 show the IP sessions between two peer user agents 146 and 148. The SIP session provides an overriding connection control

between user agents 146 and 148 using the SDP. Again, control information is also exchanged between both mobile handsets 142 and 144 in accordance with the known RTCP protocol. The RTCP session will provide feedback on the data transmission quality for each RTP session.

The packetisation of the SIP information is shown in Figure 7, where the packet is denoted 308. An SDP payload 307 is encapsulated within the SIP packet 308. A SIP packet 308 is wrapped in a User Datagram Protocol (UDP) packet 310, which is within an IP packet 305. This packet is built up by the user agent 148 and supplied to the air interface 127 for transmission to the receive side air interface 118 of the network 100. The destination address of this SIP packet is that of the other mobile handset 142. It will be understood that user agents 146 and 148 are interchangeable in this scenario.

In the preferred embodiment shown in Figure 2, the SIP packet passes to the transmit side air interface 112 via the backbone 114 for transmission to the transmitter air interface 126 and thence to the transmitter controller 108 via the user agent 146.

In use, a user of, say, the first mobile handset, 102 or 142, places a call to the second mobile handset 104 or 144, by dialling the second handset's mobile number.

The first mobile handset's number is mapped to a first IP address taken from a pool of IP addresses, and the second mobile handset's number is mapped to a second IP address taken from the pool of IP addresses. This mapping persists for as long as the connection is maintained. Once the connection is broken, usually because one or both of the users hang up, the mapping is removed and the IP addresses are returned to the pool for reuse. It will be appreciated that this arrangement means that packets can be routed using the allocated IP addresses instead of the phone numbers.

There follows a description of the basic elements of call set-up at the wireless level to aid understanding of the invention.

When a user requests a call, the requested quality class of the wireless channel is communicated to the network 100. In particular, the first mobile handset 102 or 142 can request a particular QoS from the UMTS network, which

specifies, for example, guaranteed and maximum bitrates. On this basis, and assuming there are sufficient network resources available, a wireless communications channel is established between the first mobile handset 102 or 142 and the network 100, the wireless channel having defined QoS criteria.

Alternatively the first mobile handset 102 or 142 might request the network resources as a number of wireless channels each with associated QoS (see later for multiple wireless channel discussion).

The second mobile handset 104 or 144 must similarly establish a connection with the network 100, establishing a wireless communications channel with an independent QoS criteria to that of the wireless channel established by the first handset 102 or 142.

Once the wireless communications channel or set of channels is established, video data from, say, a camera (not shown) associated with the first mobile handset 102 or 142 is received by the encoder 106, which in turn generates a sequence of CVDS video data. The video data is sent to the RTP packetiser 117, where it is packetised as described above and sent to the second mobile handset as described above. The receiving mobile handset is mobile handset 104 if mobile handset 102 is the transmitter; mobile handset 144 if mobile handset 142 is the transmitter; and mobile handset 142 if mobile handset 144 is the transmitter.

As other users make and break wireless communications channels and the network 100 continuously monitors user resource allocations, it can be the case that available bandwidth for any particular call changes, either increasing or decreasing. If a user has a multiple wireless channel allocation, one or more of the wireless channels may be terminated. It will be understood that these bandwidth changes can take place at a number of points along a given wireless communications channel. For example, it could take place between the first mobile handset 102 (or 142) and the network, or between the network and the second handset 104 (or 144).

Other factors, such as distance of a handset from a base station with which it is communicating, or strong multi-path reflections, can also cause the effective bandwidth or quality of a wireless channel to be reduced.

Any change in effective bandwidth or quality can have two consequences. If the bandwidth increases it could in principle be possible to transmit video data at a higher bitrate. If it decreases, however, the rate at which video data can reliably be transmitted also decreases, possibly below the value that was set at the start of transmission. To accommodate these consequences the QoS parameter set including the available bitrate and bit error rate on the wireless channel between the first mobile handset 102 or 142 and the network 100 is monitored by the controller 108 at the first mobile handset 102 or 142.

In the preferred form, at session initiation and when wireless channel characteristics are to be modified, the UMTS network provides the first mobile handset with a QoS parameter set that is indicative of the available bitrate (i.e. bandwidth) on the wireless communications channel. Such a QoS parameter set is supplied through the protocol stack in known wireless systems from the air interface 112 of the network to the air interface 110 of the transmitting mobile handset 102 or 142. It is normally supplied across a wireless control channel on the downlink of the call.

According to the developing UMTS standard, the QoS parameter set is indicative of various transmission parameters, including the transmissible bitrate over the wireless channel, the signal to noise ratio, the error rate and a priority indicator which is an indication provided from the network to the transmitting mobile handset of the likely priority to be placed on the call. This is therefore an indicator of the bandwidth and likely reliability of the wireless communication channel that has been opened for the particular wireless channel. It will be appreciated in this context that the word "call" is used herein to describe the transmission of video data as well or instead of voice data. The QoS parameter set is read at the mobile handset 102 or 142 by the controller 108 and the transmissible bitrate is extracted from it.

The quality of the wireless communication channel between the network 100 and the second mobile handset 104 or 144 is also monitored. In the preferred form, a QoS parameter set indicative of, amongst other things, the available bandwidth for the RTP session mapped onto this wireless channel is ascertained in the second mobile handset 104 or 144 derived from the wireless control

channel information it receives from the network according to the relevant wireless standard (in this case UMTS).

The QoS parameter set is dealt with at the second mobile handset 104 or 144 in a novel manner. The session control protocol (both bi-directional using SIP and unidirectional using RTSP) and have already been discussed. SDP provides for the exchange and updating of session description information such as codec and bitrate.

For the streaming arrangement (shown in Figure 1), according to the existing RTSP standard, various control parameters are conveyed by the RTSP packets including, for example, video commands such as PLAY and PAUSE. The standard also provides an ANNOUNCE instruction The system described herein uses the ANNOUNCE provision in the RTSP standard to cause elements of the QoS parameter set determined in the wireless environment and/or other derived parameters to be placed into an SDP payload which itself is placed in an RTSP packet for transmission from the second mobile handset 104 to the mobile handset 102. The thus constructed novel packets are transmitted by the RTSP client 123, via the receiver air interface and the received side air interface to the network backbone 114. From here they travel to the RTSP server 116 via the transmission side air interface 112 and the transmitter air interface 110.

For the conversational arrangement (in Figure 2), according to the existing SIP standard, SDP payload are conveyed by the SIP packets to control the bi-directional communication between two mobile handsets. A session is initiated using the INVITE instruction, which itself contains a session description in the SDP format. The standard provides for a session to be modified by either agent by issuing a subsequent INVITE instruction. The system described herein uses the re-INVITE provision in the SIP standard to cause the quality parameter determined in the wireless environment and/or other derived parameters to be placed into an SDP packet which itself is placed in a SIP packet for transmission from the receiving mobile handset 144 to the transmitting mobile handset 142. The thus constructed novel packets are transmitted by the session control agent 148, via the receiver air interface 120 and the received side air interface 118 to

the network backbone 114. From here they travel to the session control agent 146 via the transmission side air interface 112 and the transmitter air interface 120.

It can be understood that user agents 146 and 148 are interchangeable in this scenario. For both streaming and conversational arrangements the RTP sessions carrying the video data each have associated RTCP sessions carrying control information back to the transmitter. The system described herein can, in addition to or instead of using RTSP or SIP, use the RTCP application defined (APP) packet to transfer application data (in this case the wireless and other derived QoS parameters) from the receiver to the transmitter.

In both the streaming (Figure 1) and conversational (Figure 2) arrangements, when a session control packet is received at the transmitting mobile handset, this along with locally derived QoS parameters can be used to modify the encoded bitrate as already discussed above. In this way, the bitrate of the video stream transmitted from the encoder can be adapted to the wireless channel between a transmitting mobile handset and the network and also to the wireless channel between the network and a receiving mobile handset. In the streaming arrangement and now referencing Figure 8 and Figure 10, there are shown two ways of transmitting a CVDS from an encoder 106 to a decoder 124 using RTP between an RTP packetiser 117 and an RTP depacketiser 125. RTCP control messages are sent between RTCP server 128 and RTCP client 119. RTSP control messages are sent between an RTSP server 116 and an RTSP client 123. Figure 8 shows a prior art method of streaming CVDS transported by an RTP session 804 and associated RTCP session 805. RTSP control messages are sent via RTSP session 806. It will be appreciated that at least some part of the end to end communications channel is wireless. In Figure 8 the RTP session containing all the frames of the video stream and the RTCP session containing all RTCP control messages are multiplexed onto a single wireless channel, with the CVDS parameters and frame sequencing being derived according to the QoS parameter of the wireless channel at call set up.

Figure 9 shows the prior art for conversational arrangement. Each mobile handset is depicted with an RTP packetiser (117 or 134), an RTP depacketiser (133 or 125) and a user agent (146 or 148). For a conversational arrangement, a

CVDS is transmitted from RTP packetiser 117 to RTP depacketiser 125 using RTP session 814 and RTCP session 815 simultaneously with a CVDS transmitted from RTP packetiser 134 to RTP depacketiser 133 using RTP session 816 and RTCP session 817. A single SIP session 818 controls all the RTP/RTCP sessions. In Figure 9, as in Figure 8, the RTP sessions containing all the frames of the video stream, the RTCP sessions corresponding to these and the SIP session containing all of the SIP control messages are multiplexed onto a single wireless channel, with the CVDS parameters and frame sequencing being selected according to the QoS parameter of the wireless channel at call set up.

Figure 10 shows a preferred embodiment of the invention for the streaming arrangement, in which there is a plurality of wireless channels. In the example shown there are three wireless channels. RTP/RTCP sessions 824/825 and 826/827 are used for transmitting the two substreams of a CVDS and RTSP control messages are sent via RTSP session 828. The wireless channels are provided at call set up as previously described in a situation where the encoder 106, RTP packetiser 117, RTCP client 119 and RTSP server 116 are in a first mobile handset, and the decoder 124, RTP depacketiser 125, RTCP server 128 and RTSP client 123 are in a second mobile handset in accordance with requested QoS and bandwidth parameters according to the UMTS standard.

As with previous embodiments, the CVDS substreams are transported via RTP between the RTP packetiser 117 and RTP depacketiser 125, RTCP control messages are sent between RTCP server 128 and RTCP client 119 and control messages are transmitted via an RTSP session between the RTSP server 116 and RTSP client 123. As shown in the example Figure 8, one RTSP session covers all the RTP/RTCP sessions between any two entities while each CVDS substream requires an individual RTP session and an associated RTCP session.

Figure 11 shows a preferred embodiment of the invention for the conversational arrangement, in which there is a plurality of wireless channels. In the example shown there are three wireless channels. RTP/RTCP sessions 834/835 and 836/837 are used for transmitting the two substreams of a CVDS generated by the encoder 106. RTP/RTCP sessions 838/839 and 840/841 are used for transmitting the two substreams of a CVDS generated by the encoder

129. The SIP control messages are sent via SIP session 842. Figure 11 shows that the base layers produced by encoders 106 and 129, carried by RTP sessions 834 and 838 and packetised by RTP packetisers 117 and 134, use the up and down links of the same wireless bearer at each mobile handset. Similarly, the enhanced layers from the encoders 106 and 129, carried by RTP sessions 836 and 840 and packetised by RTP packetisers 117 and 134, use the up and down links of the same wireless bearer at each mobile handset. It will be appreciated that there are many other possible mappings between RTP/RTCP sessions to wireless bearer. The wireless channels are provided at call set up as previously described and in accordance with requested QoS and bandwidth parameters according to the UMTS standard. As shown in the example, one SIP session 845 covers all the RTP/RTCP sessions between any two entities while each CVDS substream requires an individual RTP session and an associated RTCP session.

Since wireless channels for the transmit side and receive side are allocated separately there is no guarantee that the number of transmit side and receive side wireless channels will be the same. In the streaming arrangement shown in Figure 12 there is one transmit side wireless channel and three receive side wireless channels. On the receive side RTP/RTCP sessions 844/845 and 846/847 and RTSP session 848 are each mapped to a separate wireless channel. On the transmit side all IP sessions 844-848 are mapped to the same wireless channel.

Figure 13 shows the situation for the conversational arrangement, where for the handset containing user agent 146 there is only one wireless channel, whilst for the handset containing user agent 148 there are three wireless channels. In the handset containing user agent 148 the RTP/RTCP sessions 853/854 and 857/858 are mapped to the same wireless channel. However the RTP/RTCP sessions 851/852 and 855/856 are mapped to another wireless channel and the SIP control 859 is mapped to yet another wireless channel. In the handset containing user agent 146 all IP sessions of all types 851-859 are mapped to the same wireless channel.

Under the proposed UTMS standard (and others), wireless channels can be defined in terms of a number of quality of service parameters, such as priority, maximum and guaranteed bandwidth, residual bit error rate and delay.

In the embodiment of Figure 10, the first RTP session 824 is defined as carrying the base substream, having an example bitrate of 16kbps, whilst the second RTP session 826 has a bitrate of 32kbps. The first wireless channel has the lowest bitrate but highest priority and the base substream is allocated to it. The enhancement substream is allocated to the second wireless channel, since it has the lower priority. This ensures that the most important video data is allocated to the wireless channel with the highest priority. The first RTP session can also be marked with the highest priority DSCP for prioritised transport over the IP component of a diffserv enabled core network.

As discussed above in relation to other embodiments, the allocation of resources within a UMTS network is dynamic, and this can mean that bandwidths allocated to either of the RTP sessions can fluctuate with (amongst other things) network load. In the preferred embodiment shown in Figure 1 and Figure 2, the bandwidth available for each wireless channel is known to the transmitter controller 108 as it monitors the network messages at the transmitter air interface 110. In the event that the available bandwidth on one or more of the wireless channels is commanded by the network 100 to be reduced, an assessment is made as to whether it is desirable to reallocate the frames between substreams. For example, assuming the substream frame structure of Figure 16, if the second RTP session bandwidth fell to, say, 16kbps an assessment would be taken to determine whether to simply reduce the number of P and B frames generated and leave other substreams unchanged, or whether a better overall quality would be achieved by including some of the P and B frames on the base substream at the expense of say, reduced resolution in the I frames.

It is not necessarily the case that reallocation will happen automatically and immediately without any assessment of context. In one form, the preferred embodiment is configured to maintain a history of wireless channel behaviour in relation to the quality parameter. As an example, a sudden drop in bandwidth on a wireless channel to which relatively high priority substream or frame type is

mapped may not be a trigger for the frame mapping to be changed. If there is a history of short-term bursts of bandwidth loss, it is likely that the higher bandwidth will be available shortly, and it may ultimately be more efficient to allow the short-term reduction to be ignored. Typically, an assessment of this type will be made by the transmitter controller 108. It will be understood that quite sophisticated proportional, integral and differential factors can be taken in to account to build a relatively sophisticated model of any wireless channel's behaviour (and likely future behaviour) over time. Such modelling well known to those skilled in the relevant art, and so is not described further here.

Similar history data can be collected for the other types of a quality data collected in earlier embodiments of the invention, and similarly used to make decisions about how and when to alter outputs of, for example, the encoder. In general, if there is a history of short-term bandwidth problems, then it may be more efficient or may provide a visibly better overall video streamed image if the bitrate out of the encoder is not immediately altered when the bandwidth initially drops. Rather, it will in some cases be preferable to wait until the bandwidth has remained low for a predetermined time period or number of frames before changing the output of the encoder.

Wireless channels between mobile handset and network have a certain QoS, which is provided for the mobile user of a network service. In an embodiment of the invention, a set of QoS parameters including Bitrate (BR) and Bit Error Rate (BER) are used for controlling the video encoder. These QoS parameters are conveyed between the encoder controller and the decoder controller via IP sessions. Referring to Figure 14, a wireless channel between transmitter 102 and network has QoS parameters BR and BER. A wireless channel between network and receiver 104 has QoS parameters BR' and BER'. The encoder controller 108 sends BR to decoder controller 122 via an RTSP session 866. Having received BR from the encoder controller 108, the decoder controller 122 sends BER' and the calculated Request Bitrate (RBR) to the encoder controller 108 via an RTSP session 866 or RTCP session 865. The encoder controller and the decoder controller will be discussed in detail below.

The encoder controller 108 is used to control the video encoder 106 with the objective of improving the error resilience of video encoding while meeting the bitrate constraint of wireless channels.

In a preferred embodiment of the invention, the video encoder is an MPEG-4 or H.263 compliant encoder. The input video source is encoded into an MPEG-4 or H.263 compliant bit stream. The video data can be constructed using a plurality of different types of frames, which are referred to as I, P and B frames. I frames are self-contained still frames of video data, whereas P and B frames constitute intermediate frames that are predicatively encoded. The precise composition of the frames varies in accordance with the particular standards and application of the standards and is known *per se*.

MPEG-4 specifies a plurality of layers, including the base layer and enhanced layers, in which each layer is comprised of a sequence of frames which may be of the same type (I, P, B) or a mixture of types. As already described, in a wireless network the mobile may be allocated one wireless channel or a plurality of wireless channels. In the preferred form, each wireless channel is used to transmit a single RTP/RTCP session pair. Each RTP session carries an optimum sequence of I, P and B frames, known as a substream. The term "substream" is used rather than "layer" because the frame sequencing onto wireless channels can be varied dynamically and need not be one of the layer sequences pre-defined in MPEG-4 or other known video encoding standards. Other partitions of coded video data for error resilient purposes (e.g. Data Partitioning Modes of MPEG-4/H.263) are also possible and could be represented by substreams.

Figure 16 and Figure 17 illustrate example compositions of a video data stream in accordance with the MPEG-4 video standard. In the example two temporally scalable substreams are used with I frames on the base substream while P and B frames are carried on the enhanced substream. In the illustrated example in Figure 17, only the base substream is used, comprising interleaved I and P frames. The encoder controller can thus control the bitrate of the video data stream for each wireless channel by manipulation of the number of substreams used for transmission, and the number and type of frames per substream.

Video encoding under MPEG-4 or H.263 standards operates on a frame-by-frame basis. Each frame is divided into either Group of Blocks (GOBs) or slices. A GOB comprises of macroblocks of one or several rows in a video frame. Slices are more flexible and can partition the frame into a variable number of macroblocks. A macroblock in turn comprises of four luminance and two spatially corresponding colour difference blocks of image data. All blocks in an I-frame are intra-coded. Blocks in an inter-coded P or B-frame can be of both intra-coded blocks (I-blocks) and inter-coded blocks (P-blocks or B-blocks).

The increase of I-block/P-block ratio (I_b/P_b) in P-frames or I-block/B-block ratio (I_b/B_b) in B-frames has two consequences: (1) improving the error resilience because more intra-coded blocks result in less error propagation; (2) increasing the bitrate because inter-coded blocks comprise substantially smaller amounts of data than intra-coded blocks. The encoder controller controls the encoder to make the best use of wireless channel utilisation for error resilient video encoding.

The error control can also be achieved by allocating GOBs or slices in a frame wherein the header of each GOB or slice can serve as synchronisation markers for decoder to regain synchronisation.

Figure 18 illustrates the operation of the encoder controller 108. The encoder controller operates by a closed-loop process. In the first step 400, the encoder controller obtains relevant information from various sources including the BR and BER associated with the wireless channel between the encoder and the network from air interface, the RBR and BER' via IP control session from the decoder, latency jitter (ΔL) of RTP packets from the RTCP client 123 and the instantaneous bitrate (IBR) from the encoder. In the second step 410, the encoder controller determines the target BR (BR_{target}) and the frame type (FT) based on the BR, RBR and IBR. In the third step 420, the encoder controller determines the I_b/P_b ratio for P-frames and the I_b/B_b for B-frames and the synchronisation marker rate R_{sync} for all frames. In the fourth step 430, the encoder controller determines the QP and the frame rate (FR) for the frame based on the I_b/P_b or I_b/B_b, and BR_{target}. In the fifth step 440, the encoder controller sends the encoding parameters FT, FR, R_{sync}, I_b/P_b or I_b/B_b, and QP to the encoder. In the sixth step 445, the encoder controller sends BR via IP control

session to the decoder. Then the encoder controller goes back to the first step 400.

Figure 19 illustrates the operation of the decoder controller 122. The decoder controller operates by a closed-loop process. In the first step 450, the decoder controller obtains relevant information from various sources including the BR' and BER' associated with the wireless channel between the decoder and the network from air interface, the BR associated with the wireless channel between the encoder and the network via IP session from the encoder. In the second step 460, the decoder controller determines ΔL of RTP packets received. In the third step 470, the decoder controller calculates RBR based on ΔL, BR and BR'. In the fourth step 480, the decoder controller sends the RBR and BER' via IP control session to the encoder controller. Then the decoder controller goes back to the first step 450 .Figure 20 illustrates the operation of the encoder 106. The encoder operates on a frame-by-frame basis. In the first step 490, the encoder obtains the encoding parameters including FT, FR, R_{sync}, I_b/P_b or I_b/B_b, and QP from the encoder controller. In the second step 492, the encoder allocates GOBs or slices for inter-coded frames based on R_{sync}. In the third step 494, the encoder further allocates the I-block distribution within P or B-frames based on I_b/P_b or I_b/B_b. In the fourth step 496, the encoder encodes the frame using the above encoding parameters and adds it to the CVDS. In the fifth step 498, the encoder calculates the IBR and sends it to the encoder controller. Then the encoder goes back to the first step, to process the next frame.

Although various aspects of the invention have been described with reference to specific embodiments, it will be appreciated by those skilled in the art that the invention can be embodied in many other forms.

DEFINITIONS

Unless the contrary intention clearly appears from the context in which certain words are used, the following definitions apply to words used in this specification:

WIRELESS CHANNEL; a physical radio channel with associated QoS parameters, e.g. UMTS Radio Access Bearer.

END TO END LINK; an end to end communications link between transmitter and receiver containing a transmit side wireless channel and / or a receive side wireless channel;

IP SESSION; An IP communications session between two IP hosts carrying either control or application data. Examples are a RTP session, a RTCP session, a RTSP session and a SIP session. One or more IP sessions can be mapped to a wireless channel;

COMPRESSED VIDEO DATA STREAM (CVDS); an overall video stream, where the original stream of image frames is compressed by means of an encoder;

FRAME; a video encoder outputs a number of different frame types. These include full still images and derivative images that have different data transmission requirements, have different sensitivity to errors and may have dependency on other frames. In the MPEG-4 video standard, frames are also known as Video Object Planes (VOPS);

SUBSTREAM; a CVDS may be split into a number of substreams for the purposes of transmission over a channel or plurality of channels. Each substream can be used as a means of transmitting a sequence of video frames that may be of different types. A substream is not necessarily the same as a layer as defined in video standards such as MPEG-4 and H.263. A substream could also be used to transmit any part of the coded frame data that can be successfully partitioned for error resilient purposes (e.g. DCT coefficients and motion vector data in data partitioning modes of MPEG-4/H.263). Each substream is transported by an RTP session and an associated RTCP session.

RTCP SERVER; an entity generating RTCP Receiver Reports based on the reception of RTP packets. These are sent to the transmitter of the RTP packets, where an RTCP client uses them.

RTCP CLIENT; an entity that uses RTCP Receiver Reports. These are sent from the receiver of the RTP packets, where an RTCP server generates them.

CLAIMS

1. A method of generating a compressed video data stream (CVDS) from a video stream, for transmission from a transmitter to a receiver over a wireless channel within a communications network, the method including the steps of:

(a) determining values of one or more error rate parameters associated with the wireless channel;

(b) determining values of one or more bit rate parameters associated with the wireless channel;

(c) calculating values of one or more encoding parameters using the values of the error rate parameters and the bit rate parameters;

(d) controlling encoding of the video stream on the basis of the encoding parameters, thereby to generate the CVDS.

2. A method according to claim 1, wherein step (a) includes ascertaining the error rate parameters associated with the wireless channel between the transmitter and the receiver, and step (d) includes controlling encoding of the video stream to improve an error resilience of the CVDS whilst meeting the bandwidth constraints of the wireless channel.

3. A method according to claim 2, where the transmitter is a mobile transmitter and the receiver is a network receiver, wherein the error rate parameters are derived from data taken from an air interface associated with the transmitter.

4. A method according to claim 2, where the transmitter is a network transmitter and the receiver is a mobile receiver, wherein the error rate parameters are derived from data taken from an air interface associated with the receiver and communicated via end to end feedback between the receiver and the transmitter.

5. A method according to 2, where both receiver and transmitter are mobile, wherein the error rate parameters are derived as in 3 and 4 and are combined in the transmitter.

6. A method according to claims 4 & 5, wherein the end to end feedback is carried out by one or more IP sessions between the receiver and the transmitter, wherein each IP session is one of an RTCP, RTSP or SIP session.

7. A method according to any one of the preceding claims, wherein the communications network is a UMTS or GPRS mobile telecommunications network.

8. A method according to claim 7, wherein the error rate and bit rate parameters are derived from Quality of Service (QoS) parameters associated with the wireless channel

9. A method according to claim 8, further including the step, prior to step (a), of initiating a session in which one or more of the wireless channels is established for transmission of the CVDS, the initiation of the session including receiving in the transmitter the QoS parameters from the network.

10. A method according to claim 9, when the QoS parameters are provided to the transmitter again in the event that they are modified.

11. A method according to any one of the preceding claims, wherein the CVDS is packetised into IP format packet prior to transmission.

12. A method according to claim 11, wherein the transmitter is a mobile handset and the IP packetisation includes the substeps of:

wrapping the CVDS in an RTP format packet;

wrapping the RTP packet in a UDP format packet; and

wrapping the UDP packet in an IP format packet for supply to an air interface associated with the transmitter for transmission to the receiver via the network

13. A method according to claim 12, wherein the receiver is configured to transmit a CVDS to the transmitter in accordance with any one of the preceding claims.

14. A method according to any one of the preceding claims, wherein the encoding parameters include any one or more of the following:

a frame rate;

a frame type, being indicative of either intra-coded frame or inter-coded frame;

a block type, being indicative of either intra-coded block or inter-coded block; and

a quantisation parameter.

15. A method according to claim 14, wherein the video data is divided into a sequence of frames, with each frame being further divided into Groups of Blocks (GOBs) or slices, each GOB or slice being further divided into a number of macroblocks.

16. A method according to claim 15, wherein the encoding parameters include any one or more of the following;

a ratio of intra-coded frames to inter-coded frames;

sizes of GOBs or slices, the sizes being selected such that headers of GOBs or slices can be used as resynchronisation markers for the decoder to regain synchronisation quickly when transmission errors occur;

a ratio of intra-coded blocks and inter-coded blocks for each GOB or slices in each inter-coded frame;

17. A method according to any one of the preceding claims, wherein the CVDS comprises a plurality of layers including a base layer and enhanced layers, each layer comprising a sequence of frames.

18. A method according to claim 17, wherein each layer is carried via an RTP session.

19. A method according to claim 18, wherein more than one transmit side and/or receive side wireless channel is open between the transmitter and the receiver, and each wireless channel is used to transmit an RTP session.

20. A method according to claim 19, wherein layers of the CVDS are mapped onto the wireless channels such that the base layer is mapped into the wireless channel with better transmission quality.

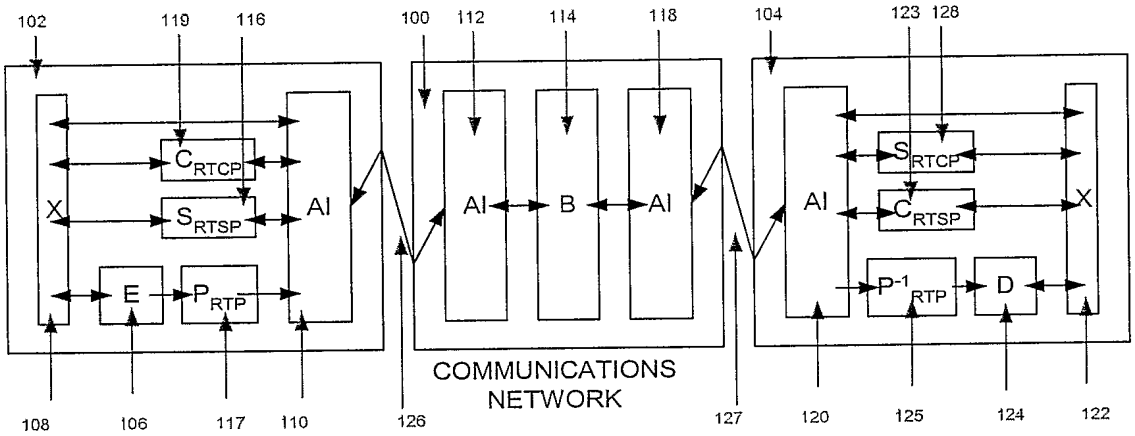

Figure 1

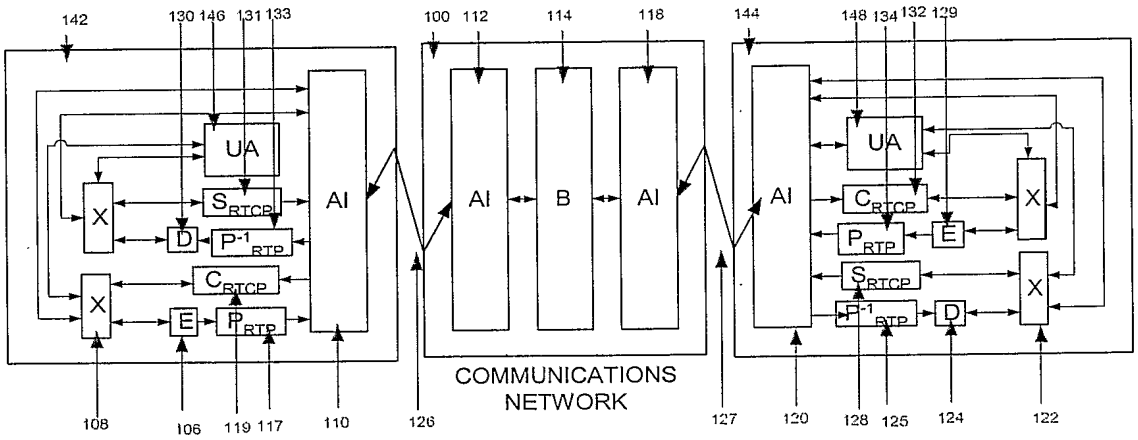

Figure 2

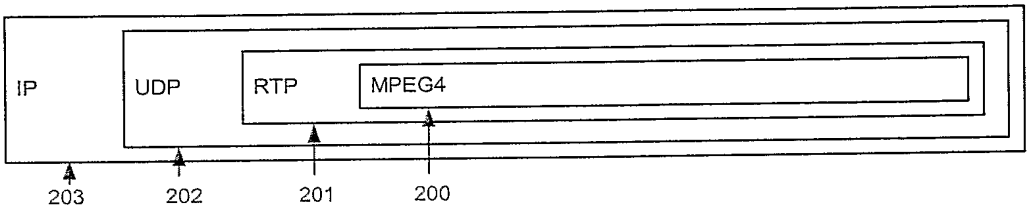

Figure 3

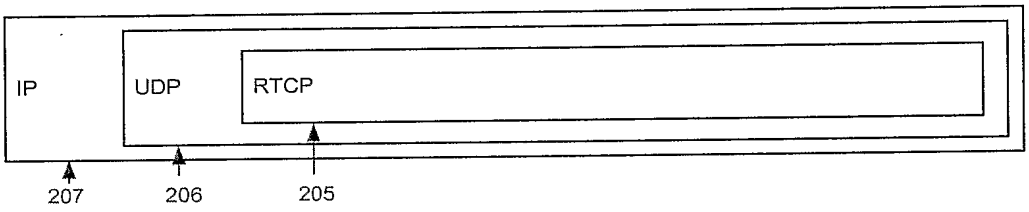

Figure 4

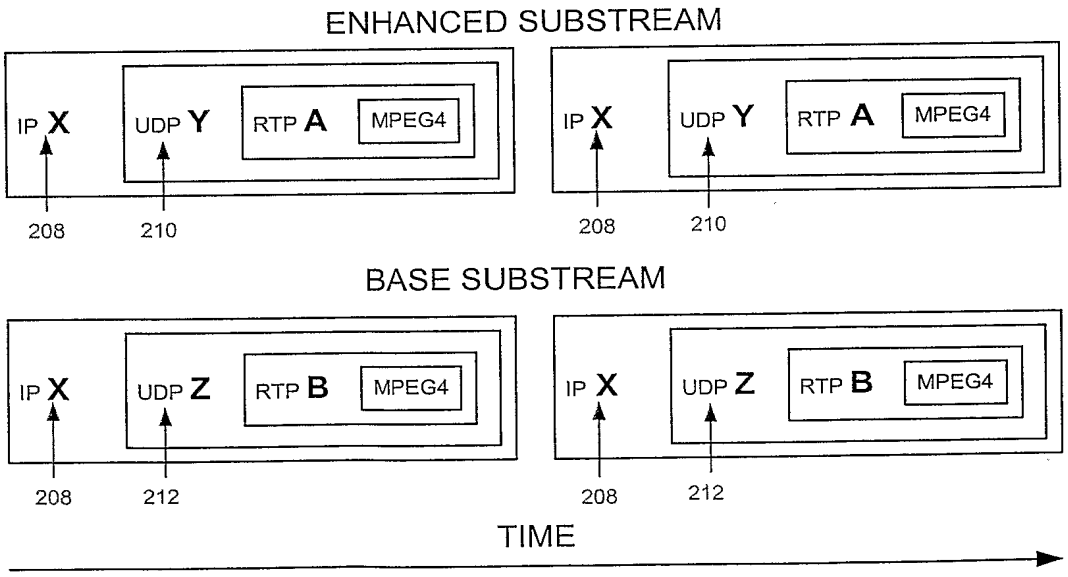

Figure 5

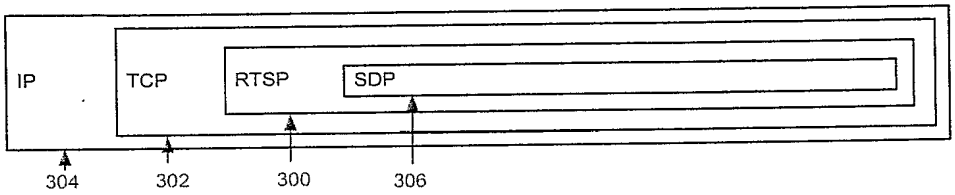

Figure 6

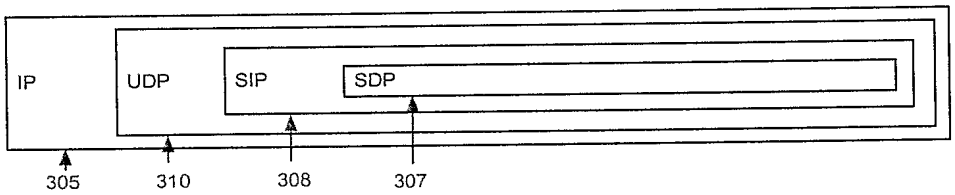

Figure 7

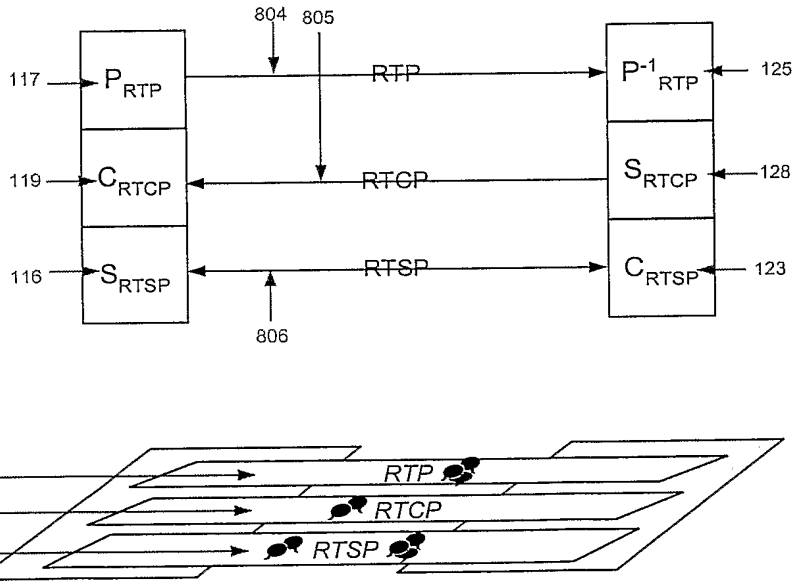

Figure 8

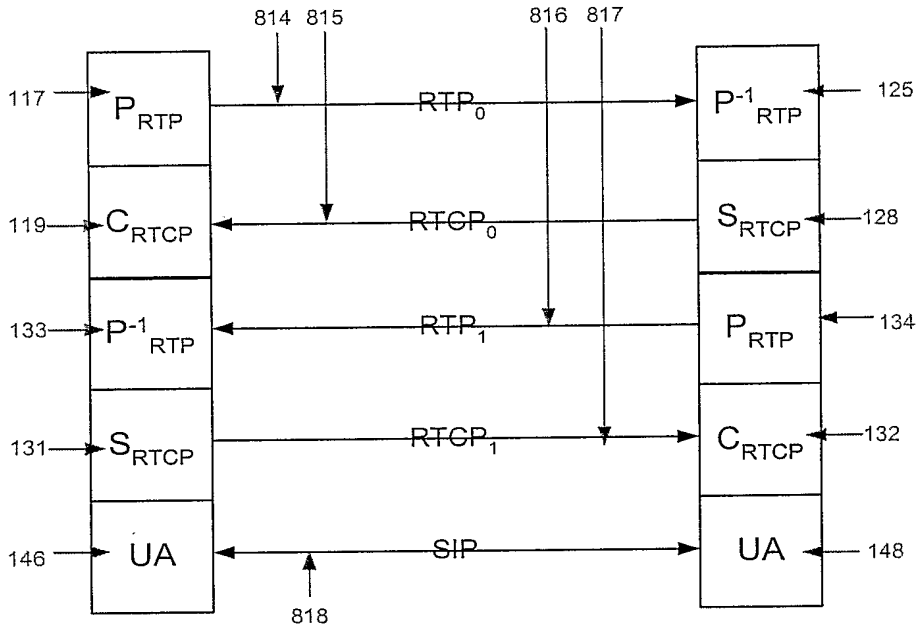
814
815
816
817
117
P_{RTP}
RTP_0
P^{-1}_{RTP}
125
119
C_{RTCP}
$RTCP_0$
S_{RTCP}
128
133
P^{-1}_{RTP}
RTP_1
P_{RTP}
134
131
S_{RTCP}
$RTCP_1$
C_{RTCP}
132
146
UA
SIP
UA
148
818

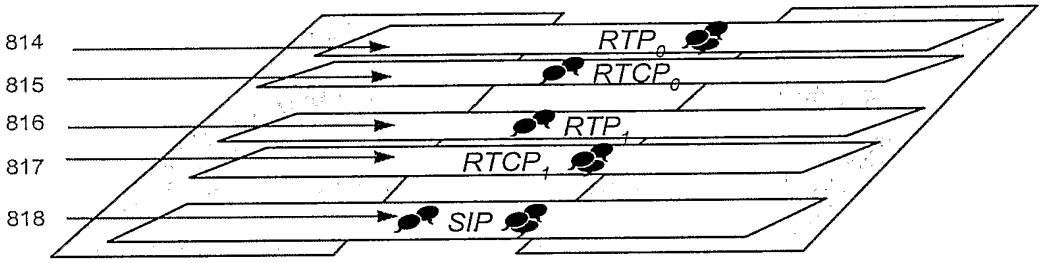
814
815
816
817
818
RTP_0
$RTCP_0$
RTP_1
$RTCP_1$
SIP

Figure 9

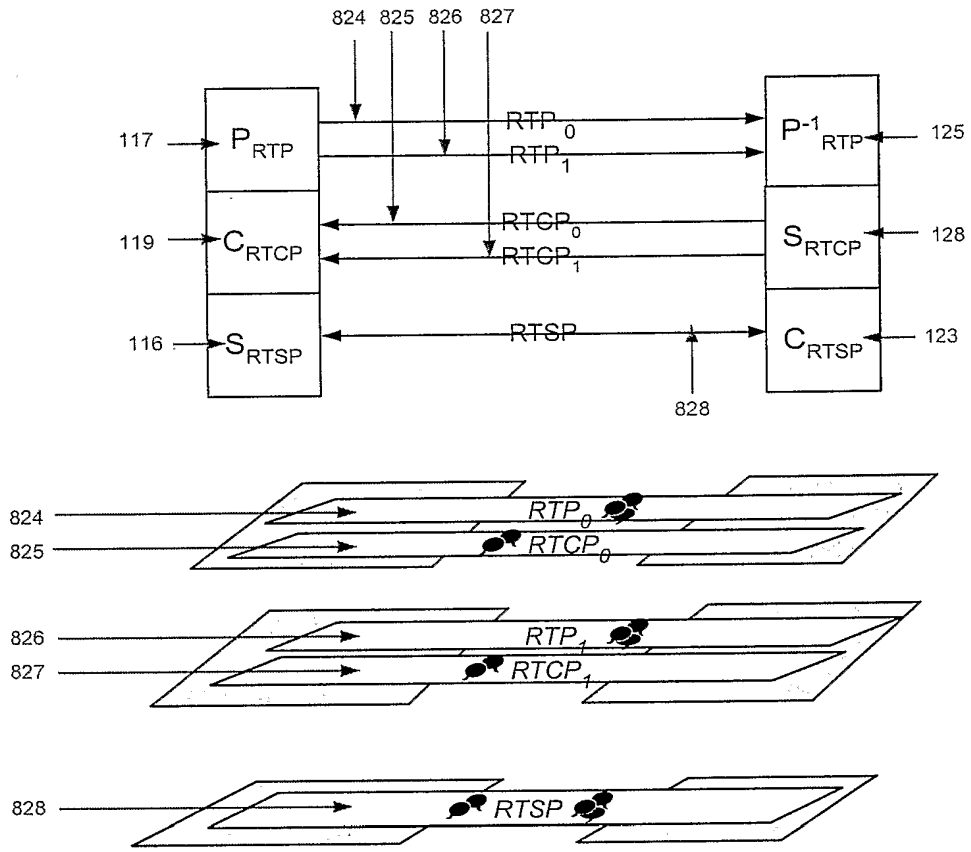
824
825
826
827
117
P_{RTP}
RTP_0
RTP_1
P^{-1}_{RTP}
125
119
C_{RTCP}
$RTCP_0$
$RTCP_1$
S_{RTCP}
128
116
S_{RTSP}
RTSP
C_{RTSP}
123
828
824
825
RTP_0
$RTCP_0$
826
827
RTP_1
$RTCP_1$
828
RTSP

Figure 10

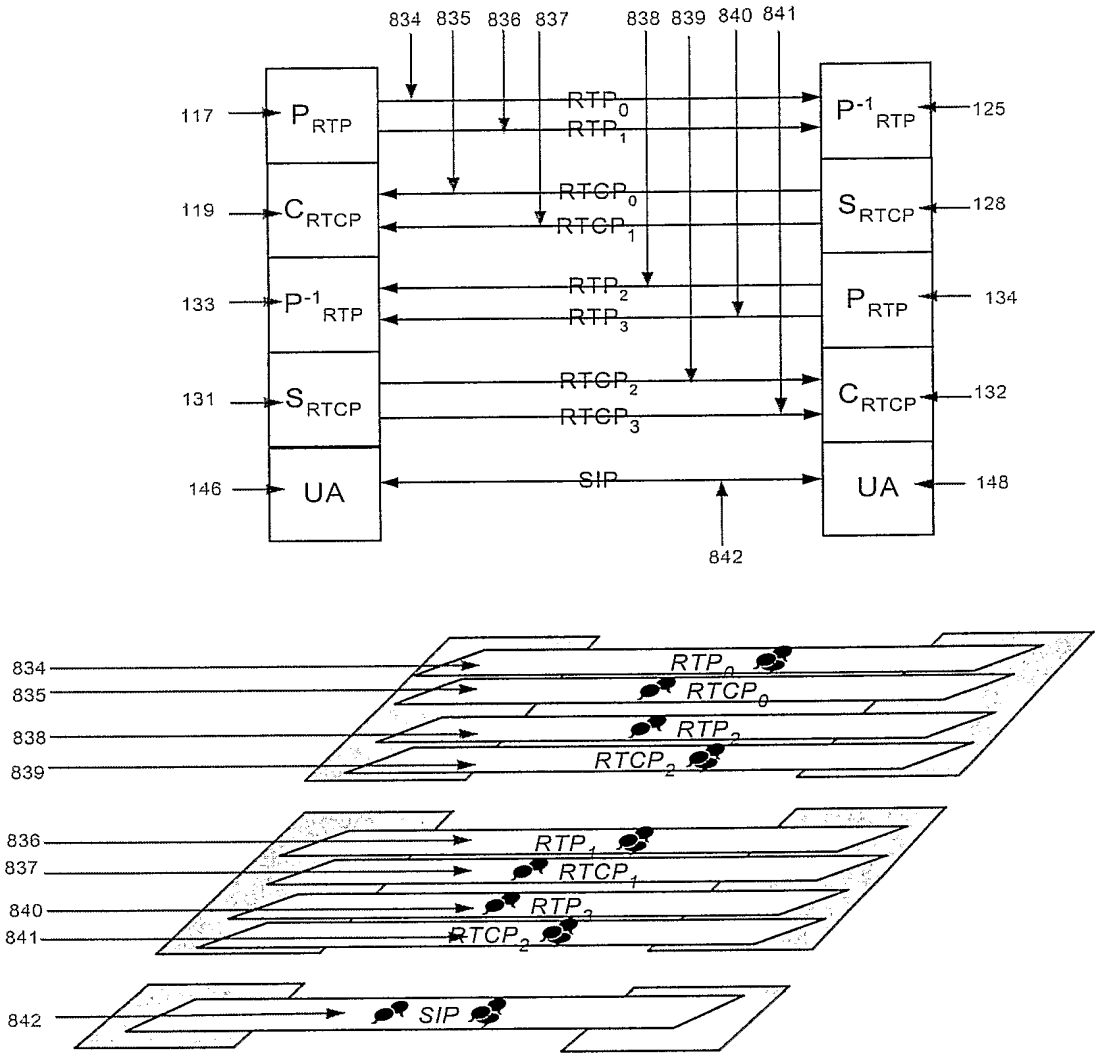
834
835
836
837
838
839
840
841
117
P_{RTP}
119
C_{RTCP}
133
P^{-1}_{RTP}
131
S_{RTCP}
146
UA
RTP_0
RTP_1
$RTCP_0$
$RTCP_1$
RTP_2
RTP_3
$RTCP_2$
$RTCP_3$
SIP
842
P^{-1}_{RTP}
125
S_{RTCP}
128
P_{RTP}
134
C_{RTCP}
132
UA
148
834
835
838
839
RTP_0
$RTCP_0$
RTP_2
$RTCP_2$
836
837
840
841
RTP_1
$RTCP_1$
RTP_3
$RTCP_3$
842
SIP

Figure 11

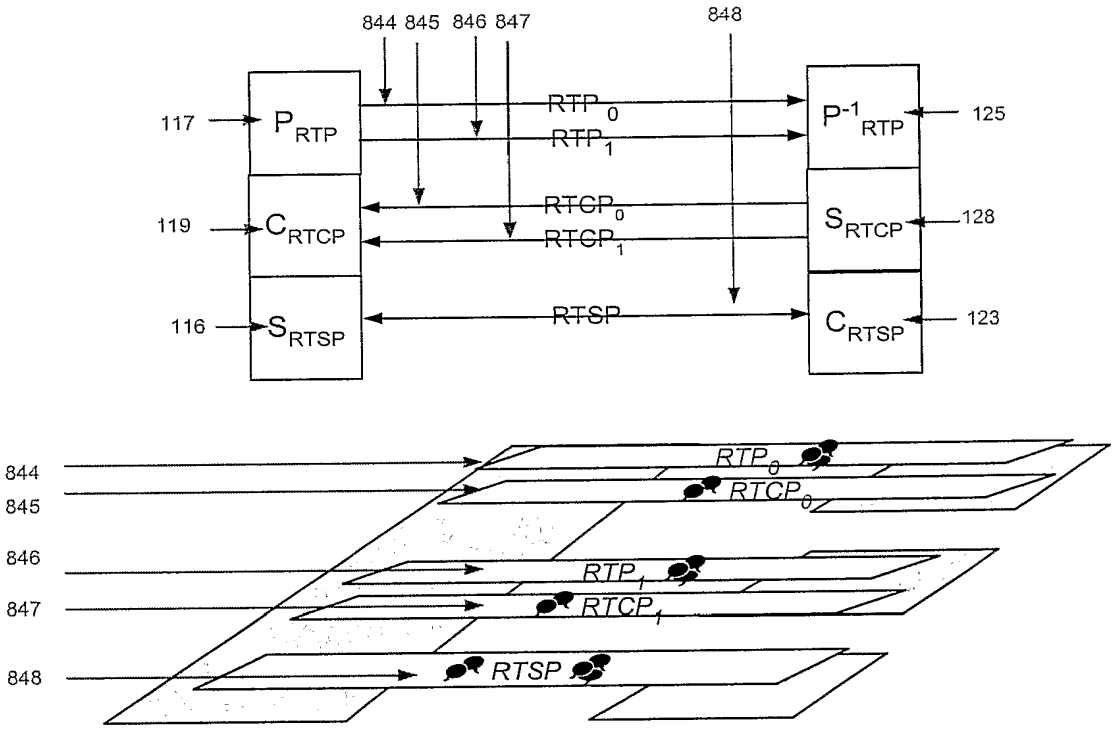
844 845 846 847
848
117
P_{RTP}
RTP_0
RTP_1
P^{-1}_{RTP}
125
119
C_{RTCP}
$RTCP_0$
$RTCP_1$
S_{RTCP}
128
116
S_{RTSP}
RTSP
C_{RTSP}
123
844
845
846
847
848
RTP_0
$RTCP_0$
RTP_1
$RTCP_1$
RTSP

Figure 12

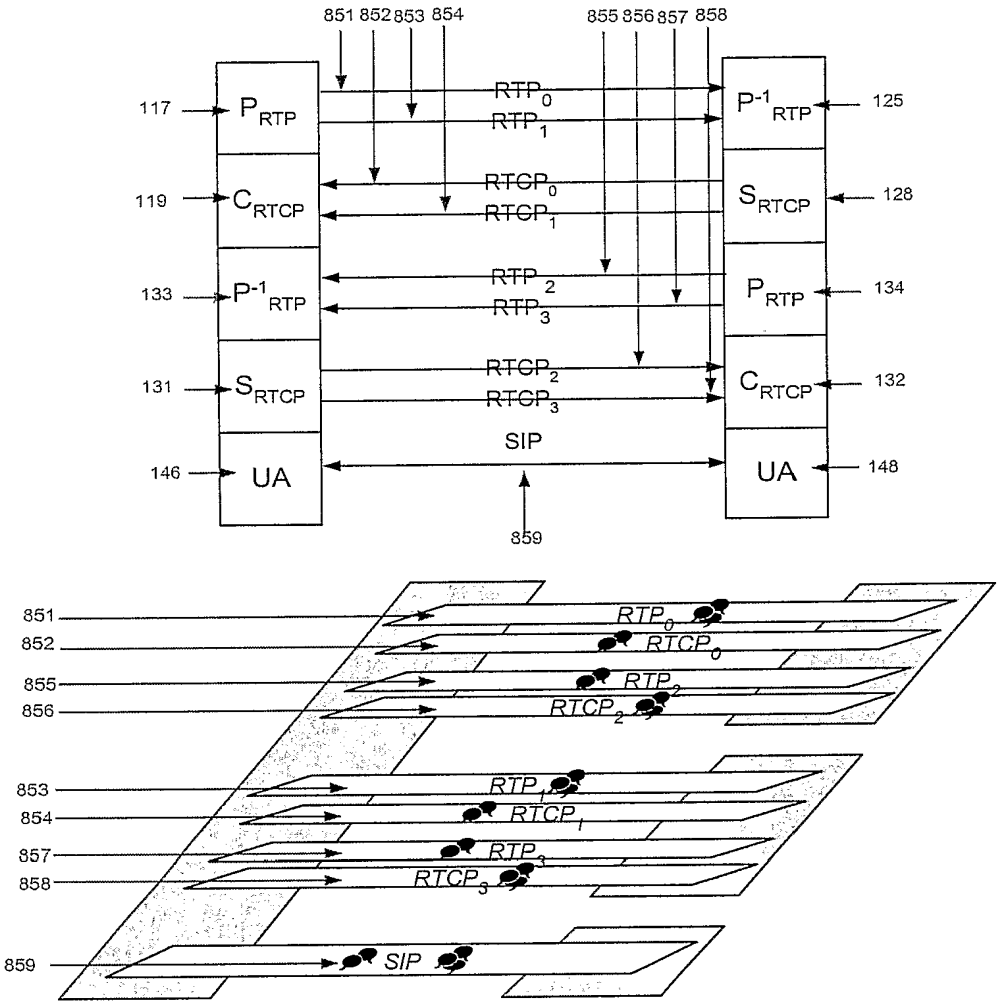
851 852 853 854
855 856 857 858
117
P_{RTP}
119
C_{RTCP}
133
P^{-1}_{RTP}
131
S_{RTCP}
146
UA
RTP_0
RTP_1
$RTCP_0$
$RTCP_1$
RTP_2
RTP_3
$RTCP_2$
$RTCP_3$
SIP
859
P^{-1}_{RTP}
125
S_{RTCP}
128
P_{RTP}
134
C_{RTCP}
132
UA
148
851
852
855
856
853
854
857
858
859
RTP_0
$RTCP_0$
RTP_2
$RTCP_2$
RTP_1
$RTCP_1$
RTP_3
$RTCP_3$
SIP

Figure 13

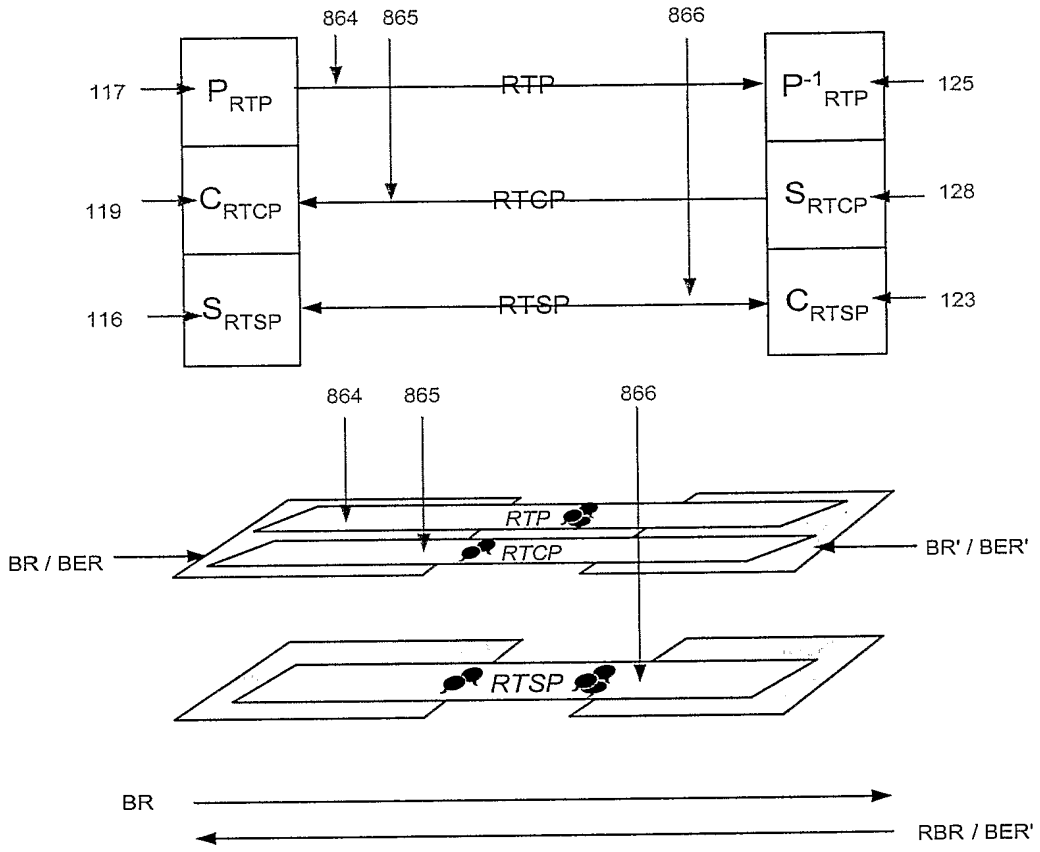
864
865
866
117
P_{RTP}
RTP
P^{-1}_{RTP}
125
119
C_{RTCP}
RTCP
S_{RTCP}
128
116
S_{RTSP}
RTSP
C_{RTSP}
123
864
865
866
RTP
RTCP
BR / BER
BR' / BER'
RTSP
BR
RBR / BER'

Figure 14

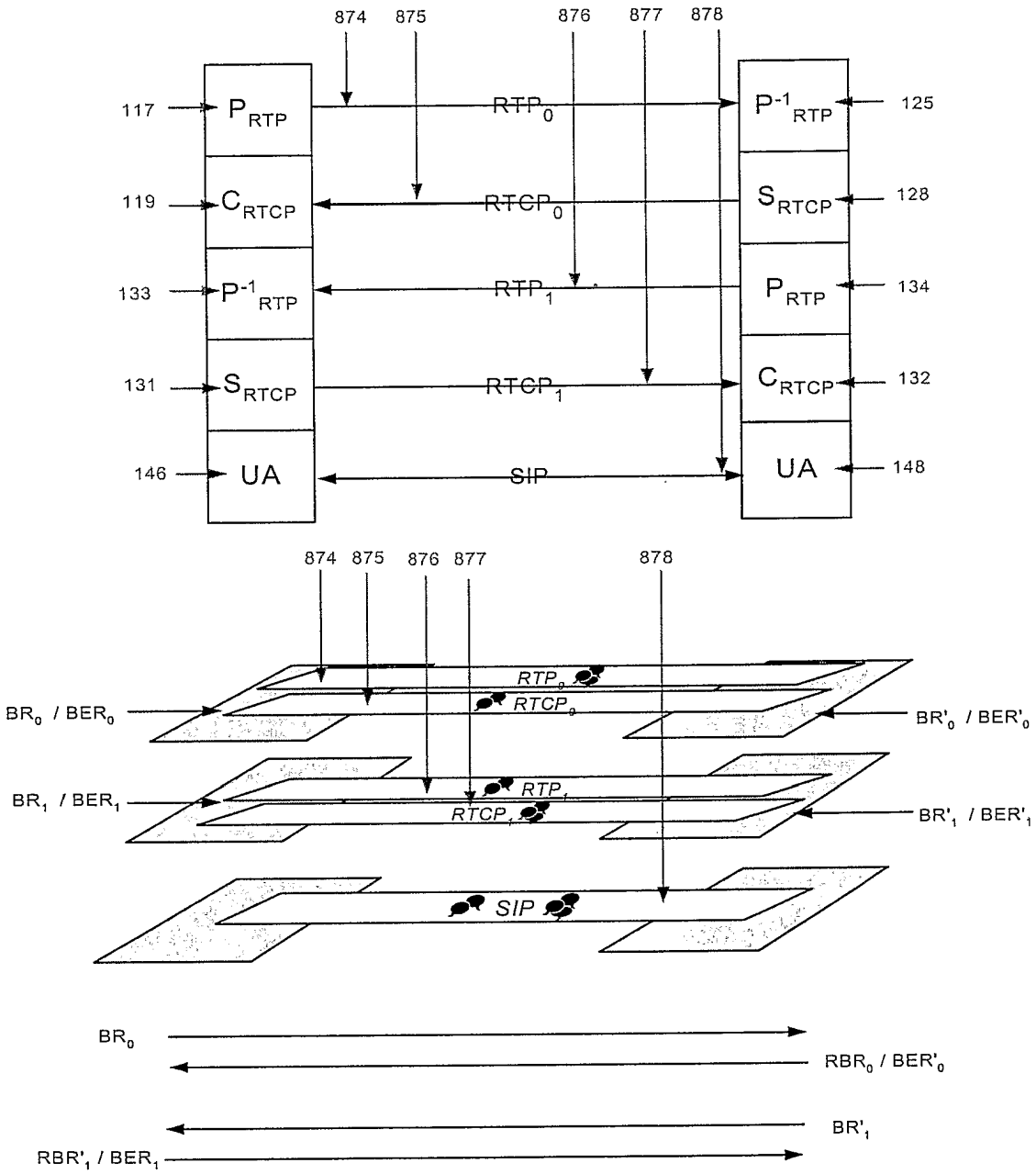
874
875
876
877
878
117
P_{RTP}
RTP_0
P^{-1}_{RTP}
125
119
C_{RTCP}
$RTCP_0$
S_{RTCP}
128
133
P^{-1}_{RTP}
RTP_1
P_{RTP}
134
131
S_{RTCP}
$RTCP_1$
C_{RTCP}
132
146
UA
SIP
UA
148
874
875
876
877
878
RTP_0
$RTCP_0$
BR_0 / BER_0
BR'_0 / BER'_0
RTP_1
$RTCP_1$
BR_1 / BER_1
BR'_1 / BER'_1
SIP
BR_0
RBR_0 / BER'_0
BR'_1
RBR'_1 / BER_1

Figure 15

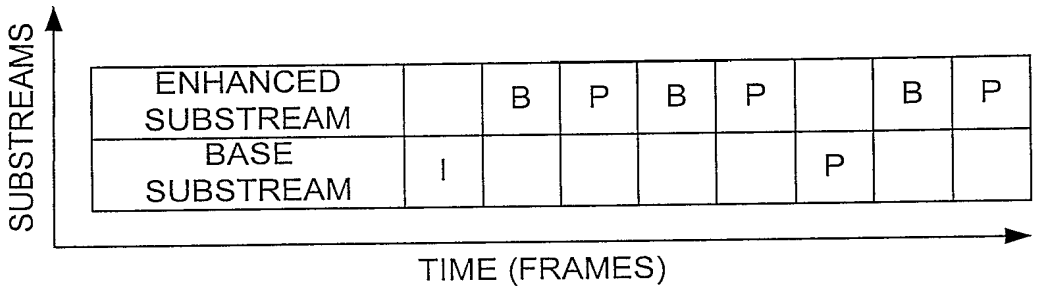

Figure 16

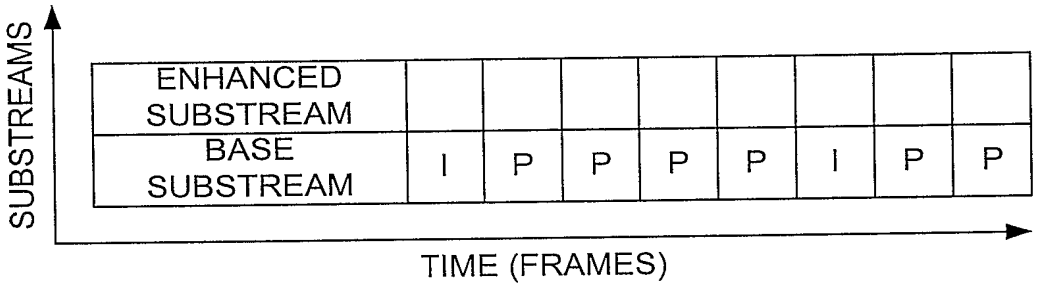

Figure 17

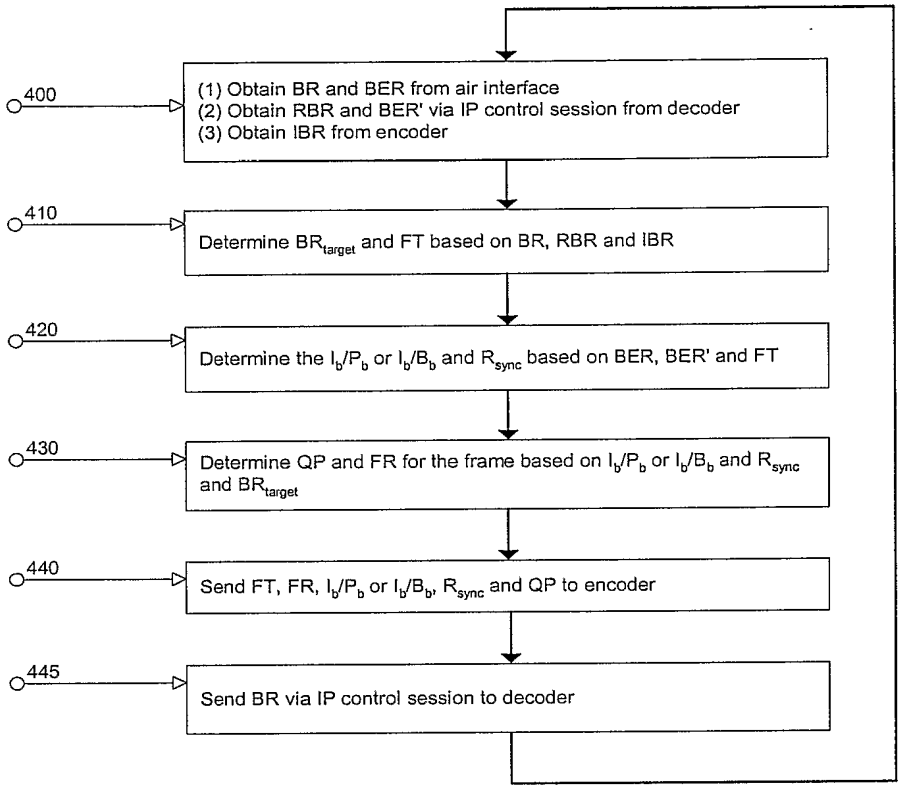

Figure 18

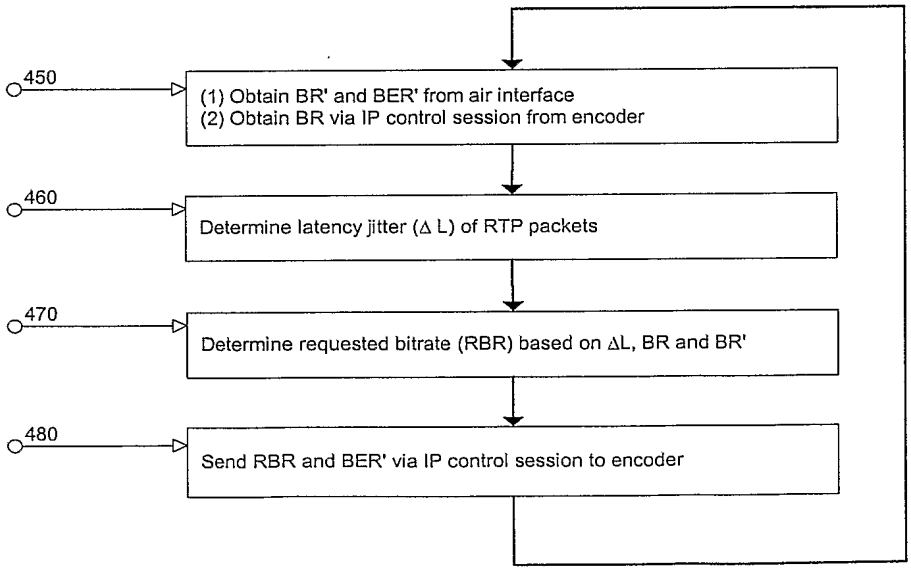

Figure 19

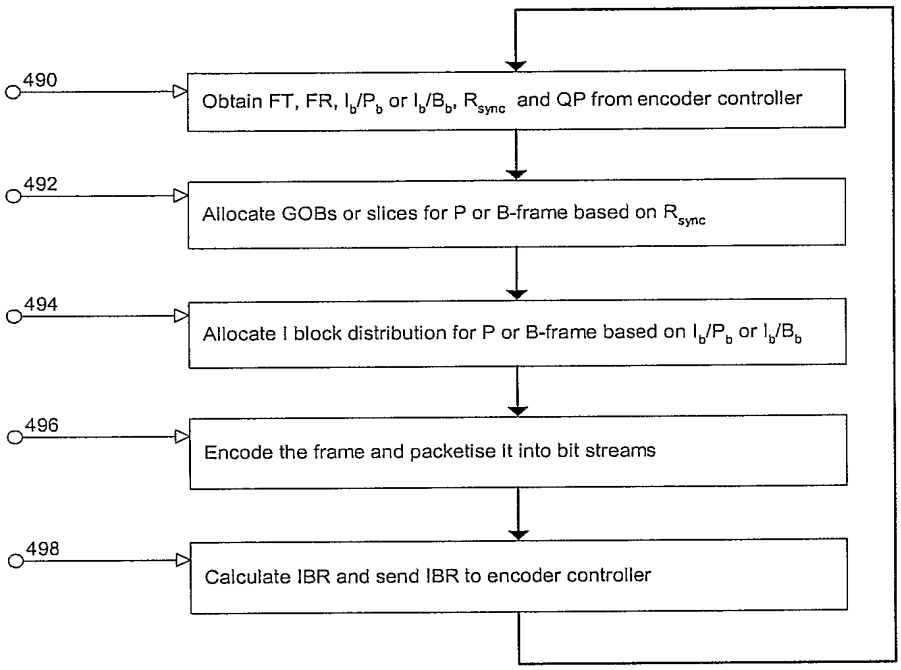
490
Obtain FT, FR, I_b/P_b or I_b/B_b, R_{sync} and QP from encoder controller
492
Allocate GOBs or slices for P or B-frame based on R_{sync}
494
Allocate I block distribution for P or B-frame based on I_b/P_b or I_b/B_b
496
Encode the frame and packetise it into bit streams
498
Calculate IBR and send IBR to encoder controller

Figure 20

INTERNATIONAL SEARCH REPORT

International Application No
PCT/GB 01/04924

A. CLASSIFICATION OF SUBJECT MATTER
IPC 7 H04N7/24

According to International Patent Classification (IPC) or to both national classification and IPC

B. FIELDS SEARCHED

Minimum documentation searched (classification system followed by classification symbols)
IPC 7 H04N

Documentation searched other than minimum documentation to the extent that such documents are included in the fields searched

Electronic data base consulted during the international search (name of data base and, where practical, search terms used)

EPO-Internal

C. DOCUMENTS CONSIDERED TO BE RELEVANT

Category °	Citation of document, with indication, where appropriate, of the relevant passages	Relevant to claim No.
X	US 6 282 240 B1 (NAKAI TOSHIHISA ET AL) 28 August 2001 (2001-08-28) column 5, line 18 - line 49 ---	1-4, 14-16
X	GUERRI J C ET AL: "A feedback packet-level error control for real-time applications in wireless networks" VEHICULAR TECHNOLOGY CONFERENCE, 1999. VTC 1999 - FALL. IEEE VTS 50TH AMSTERDAM, NETHERLANDS 19-22 SEPT. 1999, PISCATAWAY, NJ, USA,IEEE, US, 19 September 1999 (1999-09-19), pages 879-883, XP010353105 ISBN: 0-7803-5435-4	1,2,4, 6-11,14, 15
A	paragraph '0001! paragraph '0003! --- -/--	3,5,12, 16,17

[X] Further documents are listed in the continuation of box C.

[X] Patent family members are listed in annex.

° Special categories of cited documents :

"A" document defining the general state of the art which is not considered to be of particular relevance
"E" earlier document but published on or after the international filing date
"L" document which may throw doubts on priority claim(s) or which is cited to establish the publication date of another citation or other special reason (as specified)
"O" document referring to an oral disclosure, use, exhibition or other means
"P" document published prior to the international filing date but later than the priority date claimed

"T" later document published after the international filing date or priority date and not in conflict with the application but cited to understand the principle or theory underlying the invention
"X" document of particular relevance; the claimed invention cannot be considered novel or cannot be considered to involve an inventive step when the document is taken alone
"Y" document of particular relevance; the claimed invention cannot be considered to involve an inventive step when the document is combined with one or more other such documents, such combination being obvious to a person skilled in the art.
"&" document member of the same patent family

Date of the actual completion of the international search	Date of mailing of the international search report
10 July 2002	19/07/2002

Name and mailing address of the ISA	Authorized officer
European Patent Office, P.B. 5818 Patentlaan 2 NL – 2280 HV Rijswijk Tel. (+31-70) 340-2040, Tx. 31 651 epo nl, Fax: (+31-70) 340-3016	Marie-Julie, J-M

Form PCT/ISA/210 (second sheet) (July 1992)

DISH EXHIBIT 2002, Page 1047
Aylo Freesites Ltd. v. Dish Technologies L.L.C.
IPR2024-00047

INTERNATIONAL SEARCH REPORT

International Application No
PCT/GB 01/04924

C.(Continuation) DOCUMENTS CONSIDERED TO BE RELEVANT

Category °	Citation of document, with indication, where appropriate, of the relevant passages	Relevant to claim No.
X	EP 0 757 490 A (MATSUSHITA ELECTRIC IND CO LTD) 5 February 1997 (1997-02-05) page 13, line 3 -page 16, line 17 page 17, line 21 - line 57 ---	1,2,4
A	HOFFMAN D ET AL: "Hierarchical video distribution over Internet-style networks" PROCEEDINGS OF THE INTERNATIONAL CONFERENCE ON IMAGE PROCESSING (ICIP) LAUSANNE, SEPT. 16 - 19, 1996, NEW YORK, IEEE, US, vol. 1, 16 September 1996 (1996-09-16), pages 5-8, XP010202065 ISBN: 0-7803-3259-8 paragraph '0001! ---	1,17,20
A	US 5 825 430 A (ADOLPH DIRK ET AL) 20 October 1998 (1998-10-20) abstract ---	1,17-20
A	KYUNGRAN KANG ET AL: "Dynamic rate control mechanism for large scale sessions" INFORMATION NETWORKING, 1998. (ICOIN-12). PROCEEDINGS., TWELFTH INTERNATIONAL CONFERENCE ON TOKYO, JAPAN 21-23 JAN. 1998, LOS ALAMITOS, CA, USA,IEEE COMPUT. SOC, US, 21 January 1998 (1998-01-21), pages 21-24, XP010265270 ISBN: 0-8186-7225-0 the whole document ---	1,17-20
A	RADHA H ET AL: "Scalable Internet video using MPEG-4" SIGNAL PROCESSING. IMAGE COMMUNICATION, ELSEVIER SCIENCE PUBLISHERS, AMSTERDAM, NL, vol. 15, no. 1-2, September 1999 (1999-09), pages 95-126, XP004180640 ISSN: 0923-5965 the whole document ---	1,17-20
A	US 6 014 694 A (AHARONI AMIR ET AL) 11 January 2000 (2000-01-11) abstract column 2, line 10 - line 53 column 3, line 61 -column 4, line 7 column 6, line 61 -column 7, line 42 ---	1,17

-/--

Form PCT/ISA/210 (continuation of second sheet) (July 1992)

DISH EXHIBIT 2002, Page 1048
Aylo Freesites Ltd. v. Dish Technologies L.L.C.
IPR2024-00047

INTERNATIONAL SEARCH REPORT

International Application No
PCT/GB 01/04924

C.(Continuation) DOCUMENTS CONSIDERED TO BE RELEVANT

Category °	Citation of document, with indication,where appropriate, of the relevant passages	Relevant to claim No.
A	KASSLER A ET AL: "Support for multimedia applications in a wireless ATM system" 1998 1ST. IEEE INTERNATIONAL CONFERENCE ON ATM. ICATM'98. CONFERENCE PROCEEDINGS. COLMAR, FRANCE, JUNE 22 - 24, 1998, IEEE INTERNATIONAL CONFERENCE ON ATM, NEW YORK, NY: IEEE, US, 22 June 1998 (1998-06-22), pages 31-40, XP010290987 ISBN: 0-7803-4982-2 the whole document ---	1
A	RAMANUJAN R S ET AL: "Adaptive streaming of MPEG video over IP networks" LOCAL COMPUTER NETWORKS, 1997. PROCEEDINGS., 22ND ANNUAL CONFERENCE ON MINNEAPOLIS, MN, USA 2-5 NOV. 1997, LOS ALAMITOS, CA, USA,IEEE COMPUT. SOC, US, 2 November 1997 (1997-11-02), pages 398-409, XP010252445 ISBN: 0-8186-8141-1 the whole document -----	1

Form PCT/ISA/210 (continuation of second sheet) (July 1992)

DISH EXHIBIT 2002, Page 1049
Aylo Freesites Ltd. v. Dish Technologies L.L.C.
IPR2024-00047

INTERNATIONAL SEARCH REPORT

Information on patent family members

International Application No
PCT/GB 01/04924

Patent document cited in search report		Publication date	Patent family member(s)			Publication date
US 6282240	B1	28-08-2001	NONE			
EP 0757490	A	05-02-1997	CN	1152242	A	18-06-1997
			EP	0757490	A2	05-02-1997
			JP	10028269	A	27-01-1998
			KR	255229	B1	01-05-2000
			SG	74565	A1	22-08-2000
			US	6356309	B1	12-03-2002
US 5825430	A	20-10-1998	DE	19547707	A1	03-07-1997
			CN	1160321	A	24-09-1997
			EP	0781051	A2	25-06-1997
			JP	9186998	A	15-07-1997
US 6014694	A	11-01-2000	AU	7928998	A	19-01-1999
			EP	0992160	A1	12-04-2000
			WO	9900984	A1	07-01-1999
			JP	2002511216	T	09-04-2002

Form PCT/ISA/210 (patent family annex) (July 1992)

Espacenet

Bibliographic data: KR20050001167 (A) — 2005-01-06

TERMINATION DEVICE OF SEMICONDUCTOR MEMORY FOR MINIMIZING THE DATA SIGNAL DISTORTION IN BOTH READING AND WRITHING MODE

Inventor(s): LEE JAE HYEONG ± (LEE, JAE HYEONG)

Applicant(s): SAMSUNG ELECTRONICS CO LTD ± (SAMSUNG ELECTRONICS CO., LTD)

Classification: - **international:** ***G11C7/00;*** (IPC1-7): G11C7/00
- **cooperative:** G11C5/063 (KR); G11C5/147 (KR); G11C7/1048 (KR); G11C7/1051 (KR); G11C7/1078 (KR); G11C11/4074 (KR); G11C11/4096 (KR)

Application number: KR20030042738 20030627 Global Dossier

Priority number(s): KR20030042738 20030627

Abstract of KR20050001167 (A)

PURPOSE: A termination device of a semiconductor memory is provided to minimize the data signal distortion by selectively controlling the termination resistance of a data bus according to operation state of memory device in order to have the best termination resistance in both reading and writing mode. CONSTITUTION: A termination device of a semiconductor memory for minimizing the data signal distortion comprises the first power supply for supplying source voltage; the second power supply for supplying source voltage as reference voltage of the termination device; the first termination part connected with the first power supply and having prescribed resistance; the second termination part connected with the second power supply and having prescribed resistance; the first switching part(SWA) for connecting or disconnecting the first termination part to/from the memory data line(DQ) according to a reading or a writing mode of the memory device; the second switching part(SWB) for connecting or disconnecting the second termination part to/from the memory data line(DQ) according to the reading or the writing mode of the memory device. Wherein the first and the second termination part have variable resistances according to the reading or the writing mode of the memory device, and the first and the second switching part is disconnected in the reading and the writing mode and connected in a rest mode.

(19)대한민국특허청(KR)
(12) 공개특허공보(A)

(51) 。Int. Cl.7
G11C 7/00

(11) 공개번호 10-2005-0001167
(43) 공개일자 2005년01월06일

(21) 출원번호 10-2003-0042738
(22) 출원일자 2003년06월27일

(71) 출원인 삼성전자주식회사
경기도 수원시 영통구 매탄동 416

(72) 발명자 이재형
경기도성남시분당구구미동222무지개마을건영아파트1002동603호

(74) 대리인 임창현
권혁수

심사청구 : 없음

(54) 반도체 메모리 소자의 종단장치

요약

본 발명은 메모리 시스템에서 데이터의 송수신시 데이터 신호의 왜곡을 방지하기 위한 반도체 메모리 소자의 종단장치에 관한 것으로서, 특히 메모리 시스템의 동작유형 및 메모리 소자의 동작유무에 따라 데이터 버스의 종단저항값을 선택적으로 제어함으로써 송수신되는 데이터 신호의 왜곡을 최소화 할 수 있는 반도체 메모리 소자의 종단장치에 관한 것이다.

대표도

도 5

색인어

종단저항, 터미네이션, 임피던스

명세서

도면의 간단한 설명

도 1은 종래의 수동저항 소자를 종단으로 이용하는 직렬 스텁 종단 방식의 버스 구조를 보여준다.

도 2는 종래의 능동저항 소자를 종단으로 이용하는 능동 종단 스텁 방식의 버스 구조를 보여준다.

도 3A는 디램의 독출 동작시 직렬 스텁 종단 방식 및 능동 종단 스텁 방식의 버스에서 각각의 데이터 신호를 측정한 파형을 보여준다.

도 3B는 디램의 기입 동작시 직렬 스텁 종단 방식 및 능동 종단 스텁 방식의 버스에서 각각의 데이터 신호를 측정한 파형을 보여준다.

DISH EXHIBIT 2002, Page 1052
Aylo Freesites Ltd. v. Dish Technologies L.L.C.
IPR2024-00047

도 4는 3개의 메모리 슬롯을 갖는 메모리 시스템에서 동작유형에 따라 최적의 종단저항값을 찾기 위한 실시예이다.

도 5는 본 발명에서 메모리 시스템의 동작유형에 따라, 그리고 메모리 시스템에 포함된 메모리 소자의 동작유무에 따라 각기 다른 종단저항값을 갖는 종단장치의 실시예이다.

발명의 상세한 설명

발명의 목적

발명이 속하는 기술 및 그 분야의 종래기술

본 발명은 메모리 시스템에서 데이터의 송수신시 데이터 신호의 왜곡(distortion)을 방지하기 위한 반도체 메모리 소자의 종단장치에 관한 것으로서, 특히 메모리 시스템의 동작유형에 따라 데이터 버스의 종단저항값(Termination Resistance)을 선택적으로 제어함으로써 송수신되는 데이터 신호의 왜곡을 최소화 할 수 있는 반도체 메모리 소자의 종단장치에 관한 것이다.

반도체 메모리 소자는 데이터 버스(Data Bus)를 이용하여 메모리 컨트롤러(Memory Controller)와 데이터 신호를 주고받는다. 이 때, 사용되는 버스 동작 주파수(Bus Frequency)에 따라 송수신되는 데이터 신호의 왜곡이 발생하는 경우가 있다. 특히, 동작 주파수가 빠를수록 데이터 신호의 왜곡 가능성은 증가한다.

일반적으로 이러한 신호의 왜곡을 방지하기 위해 반도체 메모리 소자의 수신기(Receiver)및/또는 송신기(Transmitter)에 저항(Resistor)과 같은 소자를 이용하여 종단(Termination)처리를 하는데, 이는 저항과 같은 종단성분이 신호의 반사를 효과적으로 흡수하여 신호의 왜곡을 개선시켜주기 때문이다. 이때 사용되는 저항을 종단저항(Termination Resistance)이라 한다.

상대적으로 저속(약 100MHz)의 데이터 전송율을 갖는 동기식 디램 (Synchronous DRAM:이하, SDRAM)의 경우, 별도의 종단처리 없이 칩셋(Chipset)과 디램을 보드(PCB)상에서 바로 연결하는 저전압 TTL(LVTTL:Low Voltage Transistor-Transistor Logic) 방식으로도 신호의 왜곡 없이 데이터의 전달이 가능하였다. 그러나, 200MHz 이상의 데이터 전송율을 갖는 DDR(Double Data Rate) 램에서는 기존 의 LVTTL 방식으로는 신호의 왜곡을 막을 수 없다. 그래서, DDR 램에서는 수동저항 소자를 종단으로 이용하는 직렬 스텁 종단 방식(이하, SSTL :Stub Series Terminated Logic)을 이용하여 신호의 왜곡을 방지한다.

도 1은 종래의 수동저항 소자를 종단으로 이용하는 SSTL 방식의 버스 구조를 보여준다.

도 1에 보인 것처럼, SSTL 방식에서 신호의 전송을 위한 버스는 종단저항(Rt)을 통해 종단 전원(Vtt)에 접속되고, 디램과도 스텁저항(Rstub)을 통해 접속된다. SSTL 방식에서는 이러한 종단저항(Rt)과 스텁저항(Rstub)을 통해 신호의 스윙(Swing) 폭을 줄임으로서, 버스를 통해 전달되는 데이터 신호의 왜곡을 방지한다. 그러나, 데이터 전송율이 300MHz 이상이 되면, 스텁저항(Rstub)에 의해 버스의 부하가 증가하여 신호의 충실도(Signal Integrity)가 떨어지므로, 533MHz 이상의 데이터 전송율을 갖는 멀티-드롭(Multi-Drop) 버스 구조에서는 사용하기 어렵다. 따라서, 최근에는 능동저항 소자를 종단으로 이용하고 메모리의 동작유무에 따라 종단저항값을 적응적으로 조절할 수 있는 능동 종단 스텁 방식이 이용되고 있다.

도 2는 종래의 능동저항 소자를 종단으로 이용하는 능동 종단 스텁 방식의 버스 구조를 보여준다.

SSTL 방식에서는 종단을 위한 수동저항들(Rt, Rstub)이 디램 모듈(10, 15)이나 마더 보드상에 장착되는데 반하여, 능동 종단 스텁 방식에서는 도 2에 보인 것처럼, 칩셋(20) 및/또는 디램(23, 25)상에 내장되어 구현된다. 그래서, 능동 종단 스텁 방식을 온-다이 종단(이하, ODT:On-Die Termination) 방식이라 부르고, 반면에 마더 보드나 디램 모듈(10, 15)상에 종단을 위한 저항(Rt, Rstub)이 구현되는 SSTL 방식을 마더 보드 종단(이하, MBT:Mother Board Termination) 방식이라 부른다.

도 2를 참조하면, ODT 방식의 버스 구조는 디램(23, 25) 내부에 디램(23, 25)의 동작 여부에 따라 종단을 위한 저항(Rt)을 버스에 연결 또는, 차단하는 스위치들(SW1, SW2)이 포함되어 있다.

ODT 방식에서는 독출(Read) 또는 기입(Write)동작을 수행하고 있지 않는 디램의 종단저항은 스위치에 의해 연결되어 버스에 접속되고, 동작을 수행 중인 디램의 종단저항은 버스의 부하를 감소시키기 위해 스위치에 의해 차단되어

DISH EXHIBIT 2002, Page 1053
Aylo Freesites Ltd. v. Dish Technologies L.L.C.
IPR2024-00047

버스로부터 분리된다.

도 3A 내지 도 3B는 MBT 방식과 ODT 방식의 버스에서 각 동작 유형별 데이터 신호의 파형을 보여준다.

도 3A는 디램의 독출 동작시 각 방식별 데이터 신호의 파형을 측정한 것이고, 도 3B는 디램의 기입 동작시 각 방식별 데이터 신호의 파형을 측정한 것이다. 도 3A를 참조하면, 디램의 독출 동작시에는 MBT 방식에 비해 ODT 방식의 버스에서 신호의 왜곡 현상이 많이 개선된 것을 알 수 있다. 그러나, 도 3B에 보인 것처럼 디램의 기입 동작시에는 별다른 개선 효과가 없다는 것을 알 수 있다. 이는 데이터 전송율이 높아질수록 고정된 종단저항값을 갖는 종단방법으로는 독출 및 기입동작 모두에서 신호의 왜곡을 개선하기는 힘들다는 것을 보여준다.

발명이 이루고자 하는 기술적 과제

본 발명에서는 이상과 같은 문제를 해결하기 위해 메모리의 동작 유형에 따라 최적의 종단저항값을 가질 수 있도록 저항값을 선택적으로 제어할 수 있는 반도체 메모리 소자의 종단장치를 제공하고자 한다.

발명의 구성 및 작용

본 발명에서 메모리 시스템에 포함되는 반도체 메모리 소자의 종단장치는 종단장치에 전원을 공급하는 제1 전원공급장치; 종단장치의 기준전위에 해당하는 전원을 공급하는 제2 전원공급장치; 제1 전원공급장치에 연결된 제1 종단부; 제2 전원공급장치에 연결된 제2 종단부; 메모리 소자의 동작 여부에 따라 제1 종단부와 메모리 시스템의 데이터 라인을 연결시키거나, 또는 차단시키는 제1 스위치부; 및 메모리 소자의 동작 여부에 따라 제2 종단부와 메모리 시스템의 데이터 라인을 연결시키거나, 또는 차단시키는 제2 스위치부를 포함하고, 제1 및 제2 종단부는 메모리 시스템의 동작 유형에 따라 종단저항값이 달라짐을 특징으로 한다.

(실시예)

도 4는 3개의 메모리 슬롯을 갖는 메모리 시스템에서 동작유형에 따라 최적의 종단저항값을 찾기 위한 실시예이다.

도 4에 보인 것처럼, 메모리 시스템의 각 슬롯에 삽입되는 각각의 반도체 메모리 소자는 수동저항(Rstub) 및 능동저항(Rat)으로 구성된 종단장치(40)를 포함하고, 각각의 능동저항(Rat)은 두 개의 랭크저항(rank 0, rank 1)을 포함한다.

아래 [표 1]은 메모리 시스템의 동작유형에 따라 데이터 신호의 왜곡이 가장 적은 경우의 각 슬롯별 종단저항값을 보여준다. 이는 도 4의 실시예를 통해 실험적으로 획득한 저항값이다.

[표 1]

동작유형	칩셋저항	슬롯1 저항		슬롯2 저항		슬롯3 저항	
		rank 0	rank 1	rank 0	rank 1	rank 0	rank 1
독출(슬롯1)	150 ohm	OFF	OFF	120 ohm	120 ohm	120 ohm	120 ohm
독출(슬롯2)	150 ohm	120 ohm	120 ohm	OFF	OFF	120 ohm	120 ohm
독출(슬롯3)	150 ohm	120 ohm	120 ohm	120 ohm	120 ohm	OFF	OFF
기입(슬롯1)	OFF	OFF	OFF	75 ohm	75 ohm	75 ohm	75 ohm
기입(슬롯2)	OFF	75 ohm	75 ohm	OFF	OFF	75 ohm	75 ohm
기입(슬롯3)	OFF	75 ohm	75 ohm	75 ohm	75 ohm	OFF	OFF

도 4와 [표 1]을 참조하면, 메모리 시스템의 각 슬롯(Slot)에 삽입된 메모리 소자에 대한 독출 동작이 수행될 때, 데이터 신호의 왜곡이 가장 작은 경우는 칩셋의 종단저항값이 150 옴(ohm)이고, 각 슬롯에 삽입되어 있는 메모리 소자의 종단저항(rank 0, rank 1) 값이 각각 120 옴일 때이다. 그리고, 실제 독출 동작이 수행되고 있는 메모리 소자의 종단

DISH EXHIBIT 2002, Page 1054
Aylo Freesites Ltd. v. Dish Technologies L.L.C.
IPR2024-00047

저항은 데이터 버스의 부하를 줄이기 위해 데이터 버스로부터 차단된다. 즉, 슬롯 1에 삽입된 메모리 소자(40)에 대해 독출동작이 수행된다면, 슬롯 1에 삽입된 메모리 소자(40)의 저항은 데이터 버스로부터 차단되고, 독출동작을 수행하지 않는 슬롯 2 및 슬롯 3에 삽입된 메모리 소자의 종단저항(rank 0, rank 1) 값은 각각 120 옴의 저항값을 갖는다. 또한, 메모리 시스템에서 기입 동작이 수행될 때, 데이터 신호의 왜곡이 가장 작은 경우는 칩셋의 종단저항이 데이터 버스로부터 차단되고, 각 슬롯에 삽입되어 있는 메모리 소자의 종단저항(rank 0, rank 1) 값이 각각 75 옴일 때이다. 기입 동작시에도 독출 동작시와 마찬가지로 실제 동작이 수행되고 있는 메모리 소자의 종단저항은 데이터 버스의 부하를 줄이기 위해 차단된다.

이상에서 보인 바와 같이, 데이터 버스를 통한 데이터 신호의 왜곡을 최소화하기 위해서는 메모리 시스템의 동작유형에 따라, 그리고 메모리 시스템에 포함된 메모리 소자의 동작유무에 따라 종단을 위한 저항의 값이 달라져야 한다.

도 5는 본 발명에서 메모리 시스템의 동작유형에 따라, 그리고 메모리 시스템에 포함된 메모리 소자의 동작유무에 따라 각기 다른 종단저항값을 갖는 종단장치의 실시예이다.

도 5의 실시예에서 보인 바와 같이 본 발명의 종단장치는 메모리 시스템의 동작유형 및 메모리 소자의 동작유무에 따라 선택적으로 접속 또는 차단되는 다수의 스위치들을 포함한다. 이들 중 제1 스위치(SWA)와 제2 스위치(SWB)는 해당 메모리 소자의 동작유무를 나타내는 제어신호에 따라 메모리 시스템의 데이터 라인(DQ)과 종단사이의 연결을 접속 또는 차단한다. 즉, 메모리 시스템에서 해당 메모리 소자에 독출 또는 기입동작을 수행하는 경우 제1 스위치(SWA)와 제2 스위치(SWB)는 데이터 라인(DQ)의 부하를 감소시키기 위해 차단되고, 다른 메모리 소자에 독출 또는 기입동작을 수행하는 경우 제1 스위치(SWA)와 제2 스위치(SWB)는 접속되어 종단저항을 데이터 라인(DQ)에 연결한다.

제3 스위치(SW1)와 제4 스위치(SW2)는 메모리 시스템의 독출동작을 나타내는 신호에 따라 접속되고, 기입동작을 나타내는 신호에 의해 차단된다. 그리고, 각 스위치(SW1, SW2)에 연결된 종단저항들(R1, R2)은 앞서 [표 1]에 보인 바와 같이 각각 120 옴의 저항값을 갖는다.

제5 스위치(SW3)와 제6 스위치(SW4)는 메모리 시스템의 기입동작을 나타내는 신호에 따라 접속되고, 독출동작을 나타내는 신호에 의해 차단된다. 그리고, 각 스위치(SW3, SW4)에 연결된 종단저항들(R3, R4)은 각각 75 옴의 저항값을 갖는다.

결론적으로, 메모리 시스템에서 독출 또는 기입동작을 수행하는 경우, 실제 독출 또는 기입동작을 수행하고 있는 메모리 소자의 종단저항들은 제1 스위치(SWA) 및 제2 스위치(SWB)에 의해 데이터 라인(DQ)으로부터 차단되고, 현재 독출 또는 기입동작을 수행하고 있지 않는 메모리 소자의 종단저항들은 메모리 시스템의 동작유형에 따라 제어되는 제3 내지 제6 스위치(SW1 ~ SW4)에 의해 데이터 라인(DQ)과 연결된다. 즉, 메모리 시스템이 독출동작을 수행하고 있는 경우에는 제3 스위치(SW1)와 제4 스위치(SW2)는 연결되고 제5 스위치(SW3)와 제6 스위치(SW4)는 차단되어 120옴의 저항값을 갖는 저항 R1과 R2가 데이터 라인(DQ)에 연결되어 종단저항의 역할을 한다. 그리고, 메모리 시스템이 기입동작을 수행하고 있는 경우에는 제5 스위치(SW3)와 제6 스위치(SW4)가 연결되고 제3 스위치(SW1)와 제4 스위치(SW2)는 차단되어 75옴의 저항값을 갖는 저항 R3과 R4가 데이터 라인(DQ)에 연결되어 종단저항의 역할을 한다.

이상에서, 본 발명에 따른 회로의 구성 및 동작을 상기한 실시예 및 도시된 도면을 통해 설명하였지만, 이는 예시적인 것에 불과하며 본 발명의 기술적 사상을 벗어나지 않는 범위내에서 다양한 응용 및 변경이 가능하다.

발명의 효과

상술한 바와 같이, 본 발명의 종단장치는 메모리 소자의 동작유무에 따라, 그리고 동작유형에 따라 최적의 종단저항값을 갖도록 선택적으로 제어함으로써 메 모리 소자의 독출 및 기입동작 모두에 대해 데이터 신호의 왜곡을 최소화할 수 있다.

(57) 청구의 범위

청구항 1.

메모리 시스템에 포함되는 반도체 메모리 소자의 종단장치에 있어서,

상기 종단장치는 전원을 공급하는 제1 전원공급장치;

상기 종단장치의 기준전위에 해당하는 전원을 공급하는 제2 전원공급장치;

DISH EXHIBIT 2002, Page 1055
Aylo Freesites Ltd. v. Dish Technologies L.L.C.
IPR2024-00047

상기 제1 전원공급장치에 연결되고 소정의 저항값을 갖는 제1 종단부;

상기 제2 전원공급장치에 연결되고 소정의 저항값을 갖는 제2 종단부;

상기 메모리 소자의 동작 여부에 따라 상기 제1 종단부와 상기 메모리의 데이터 라인을 연결시키거나, 또는 차단시키는 제1 스위치부; 및

상기 메모리 소자의 동작 여부에 따라 상기 제2 종단부와 상기 메모리의 데이터 라인을 연결시키거나, 또는 차단시키는 제2 스위치부를 포함하되,

상기 제1 종단부 및 상기 제2 종단부는 상기 메모리 시스템의 동작 유형에 따라 저항값이 달라짐을 특징으로 하는 반도체 메모리 소자의 종단장치.

청구항 2.
제 1항에 있어서,

상기 제1 스위치부 및 상기 제2 스위치부는 상기 메모리 소자가 독출 또는 기입동작을 수행할 때 차단되고, 상기 메모리 소자가 독출 또는 기입동작을 수행하지 않을 때 연결됨을 특징으로 하는 반도체 메모리 소자의 종단장치.

청구항 3.
제 1항에 있어서,

상기 제1 종단부는 상기 메모리 시스템의 독출동작시 소정의 저항값을 갖는 제1 종단기; 및

상기 메모리 시스템의 기입동작시 소정의 저항값을 갖는 제2 종단기를 포함하며,

상기 제1 종단기와 상기 제2 종단기는 서로 병렬로 구성됨을 특징으로 하는 반도체 메모리 소자의 종단장치.

청구항 4.
제 3항에 있어서,

상기 제1 종단기는 120 옴의 저항값을 갖는 제1 종단저항; 및

상기 제1 종단저항과 직렬로 구성되어 상기 메모리 시스템의 독출동작시 연결되고, 기입동작시 차단되는 제1 스위치를 포함함을 특징으로 하는 반도체 메모리 소자의 종단장치.

청구항 5.
제 3항에 있어서,

상기 제2 종단기는 75 옴의 저항값을 갖는 제2 종단저항; 및

상기 제2 종단저항과 직렬로 구성되어 상기 메모리 시스템의 독출동작시 차단되고, 기입동작시 연결되는 제2 스위치를 포함함을 특징으로 하는 반도체 메모리 소자의 종단장치.

청구항 6.
제 1항에 있어서,

상기 제2 종단부는 상기 메모리 시스템의 독출동작시 소정의 저항값을 갖는 제3 종단기; 및

상기 메모리 시스템의 기입동작시 소정의 저항값을 갖는 제4 종단기를 포함하며,

상기 제3 종단기와 상기 제4 종단기는 서로 병렬로 구성됨을 특징으로 하는 반도체 메모리 소자의 종단장치.

청구항 7.
제 6항에 있어서,

상기 제3 종단기는 120 옴의 저항값을 갖는 제3 종단저항; 및

DISH EXHIBIT 2002, Page 1056
Aylo Freesites Ltd. v. Dish Technologies L.L.C.
IPR2024-00047

상기 제3 종단저항과 직렬로 구성되어 상기 메모리 시스템의 독출동작시 연결되고, 기입동작시 차단되는 제3 스위치를 포함함을 특징으로 하는 반도체 메모리 소자의 종단장치.

청구항 8.
제 6항에 있어서,

상기 제4 종단기는 75 옴을 갖는 제4 종단저항; 및

상기 제4 종단저항과 직렬로 구성되어 상기 메모리 시스템의 독출동작시 차단되고, 기입동작시 연결되는 제4 스위치를 포함함을 특징으로 하는 반도체 메모리 소자의 종단장치.

도면

도면1

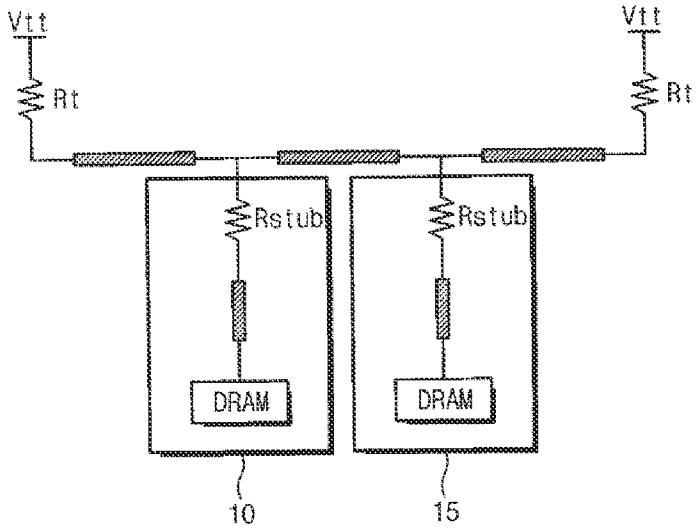

도면2

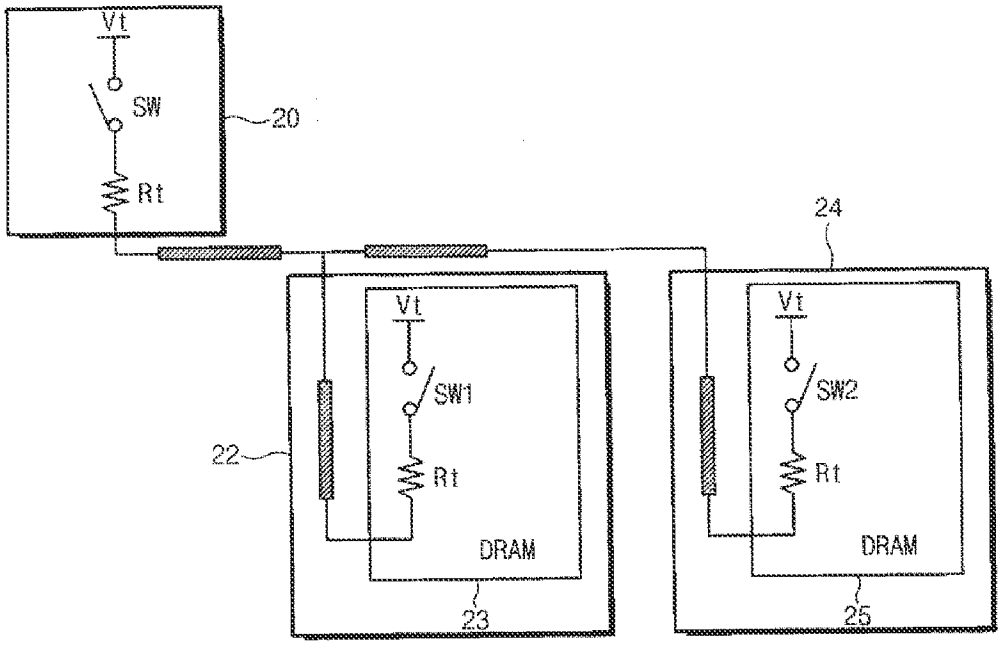

DISH EXHIBIT 2002, Page 1057
Aylo Freesites Ltd. v. Dish Technologies L.L.C.
IPR2024-00047

도면3a

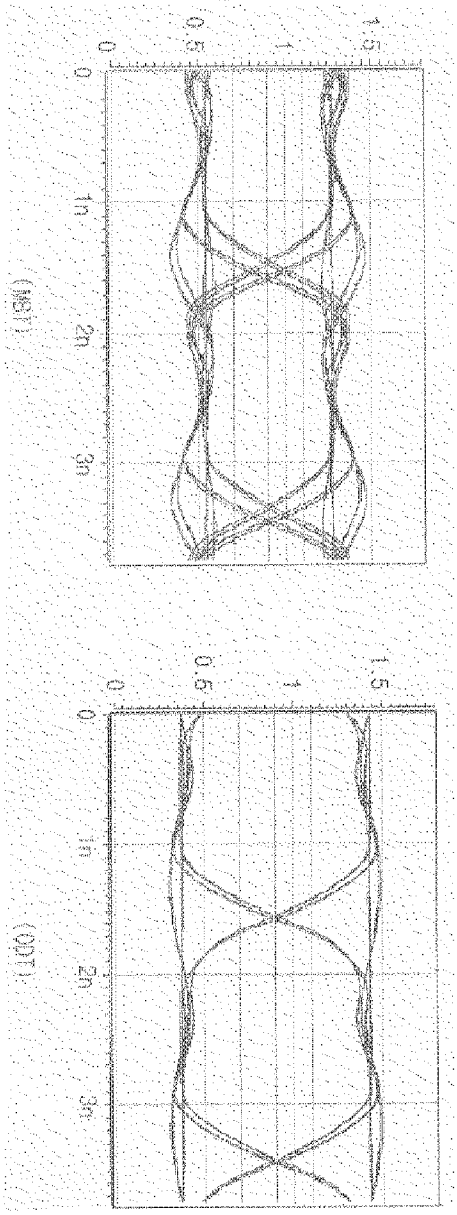

도면3b

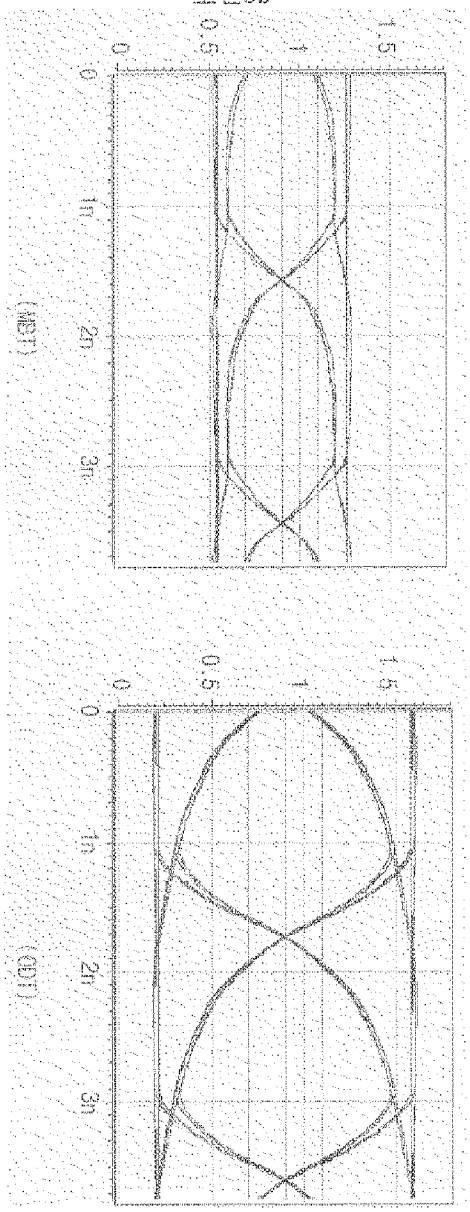

도면4

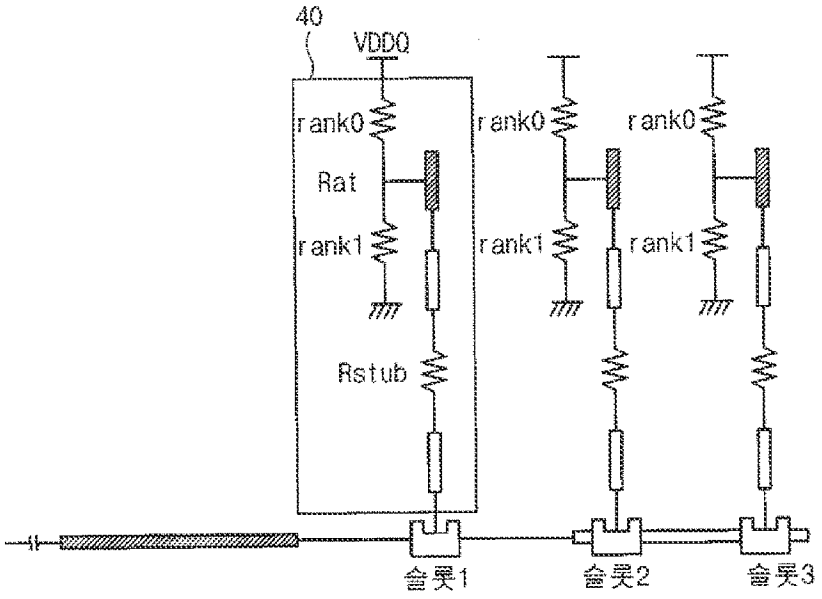

도면5

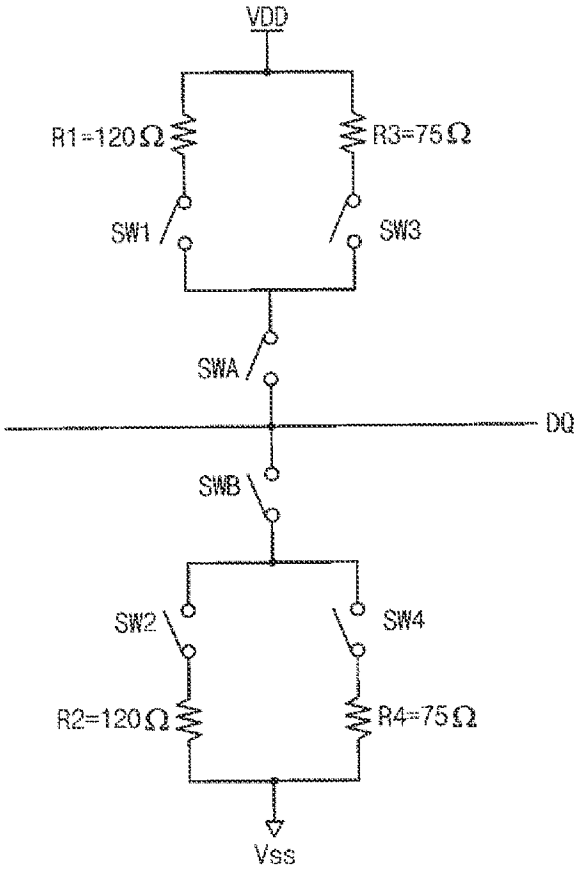

DISH EXHIBIT 2002, Page 1060
Aylo Freesites Ltd. v. Dish Technologies L.L.C.
IPR2024-00047

(12) INTERNATIONAL APPLICATION PUBLISHED UNDER THE PATENT COOPERATION TREATY (PCT)

(19) World Intellectual Property Organization
International Bureau

(43) International Publication Date
6 June 2002 (06.06.2002)

PCT

(10) International Publication Number
WO 02/045372 A3

(51) International Patent Classification[7]: H04L 29/06, H04N 7/24

(21) International Application Number: PCT/GB01/05246

(22) International Filing Date: 28 November 2001 (28.11.2001)

(25) Filing Language: English

(26) Publication Language: English

(30) Priority Data:
00310594.7 29 November 2000 (29.11.2000) EP

(71) Applicant *(for all designated States except US)*: **BRITISH TELECOMMUNICATIONS PUBLIC LIMITED COMPANY** [GB/GB]; 81 Newgate Street, London EC1A 7AJ (GB).

(72) Inventors; and
(75) Inventors/Applicants *(for US only)*: **WALKER, Matthew, David** [GB/GB]; 9 Thirlmere Court, Felixstowe, Suffolk IP11 9SN (GB). **JACOBS, Richard, James** [GB/GB]; 15 Through Duncans, Woodbridge, Suffolk IP12 4EA (GB). **NILSSON, Michael, Erling** [GB/GB]; 5 Laburnum Gardens, Rushmere St. Andrew, Ipswich IP5 1BY (GB).

(74) Agent: **ROBINSON, Simon, Benjamin**; BT Group Legal Services, Intellectual Property Dept., Holborn Centre, 8th Floor, 120 Holborn, London EC1N 2TE (GB).

(81) Designated States *(national)*: AE, AG, AL, AM, AT, AU, AZ, BA, BB, BG, BR, BY, BZ, CA, CH, CN, CO, CR, CU, CZ, DE, DK, DM, DZ, EC, EE, ES, FI, GB, GD, GE, GH, GM, HR, HU, ID, IL, IN, IS, JP, KE, KG, KP, KR, KZ, LC, LK, LR, LS, LT, LU, LV, MA, MD, MG, MK, MN, MW, MX, MZ, NO, NZ, OM, PH, PL, PT, RO, RU, SD, SE, SG, SI, SK, SL, TJ, TM, TR, TT, TZ, UA, UG, US, UZ, VN, YU, ZA, ZM, ZW.

(84) Designated States *(regional)*: ARIPO patent (GH, GM, KE, LS, MW, MZ, SD, SL, SZ, TZ, UG, ZM, ZW), Eurasian patent (AM, AZ, BY, KG, KZ, MD, RU, TJ, TM), European patent (AT, BE, CH, CY, DE, DK, ES, FI, FR, GB, GR, IE, IT, LU, MC, NL, PT, SE, TR), OAPI patent (BF, BJ, CF, CG, CI, CM, GA, GN, GQ, GW, ML, MR, NE, SN, TD, TG).

[Continued on next page]

(54) Title: TRANSMITTING AND RECEIVING REAL-TIME DATA

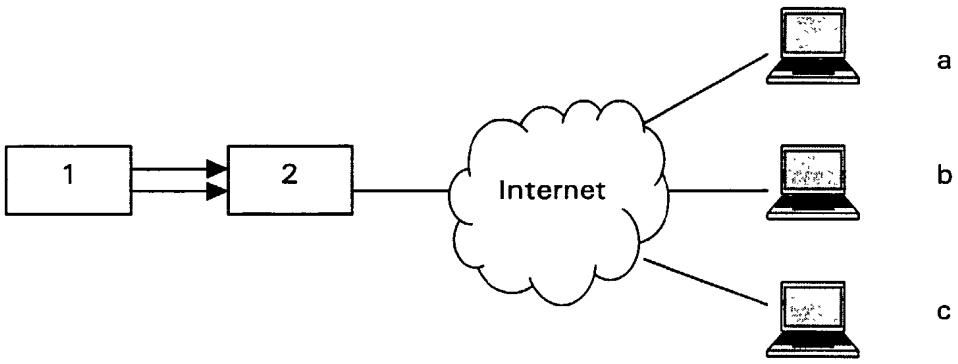

(57) Abstract: The invention concerns streaming real-time data (e.g. video) over packet networks (e.g. the Internet). Conventionally, in packet networks, in order to view streamed video data a reservoir of data is built up to reduce the effect of jitter, caused by variations in the inter-arrival times of packets of data. Consequently, a delay is experienced before the video material can be viewed as the reservoir is filled. The invention is concerned with providing streamed video without the start-up delay by transmitting data from a video streamer to the video viewer more rapidly than the video viewer consumes the data and using the excess data to build a buffer at the video viewer. When a suitable sized buffer is built the transmission rate of data to the buffer may be reduced. In order to deliver the best quality material for the available bandwidth, the supply of video data may be switched to a higher bit-rate source when the reservoir is filled. Fluctuations in network throughput may be accommodated during the transmission of data on a fine scale by adjusting the transmission rate of the data and on a coarse scale by switching between data streams encoded at different bit-rates. Fluctuations in network throughput are determined by counting the number of missing packets at the video viewer which information may then be fed back to the video streamer to adjust the flow of data accordingly.

WO 02/045372 A3

Published:
— *with international search report*
— *before the expiration of the time limit for amending the claims and to be republished in the event of receipt of amendments*

(88) Date of publication of the international search report:
6 September 2002

For two-letter codes and other abbreviations, refer to the "Guidance Notes on Codes and Abbreviations" appearing at the beginning of each regular issue of the PCT Gazette.

INTERNATIONAL SEARCH REPORT

ational Application No
PCT/GB 01/05246

A. CLASSIFICATION OF SUBJECT MATTER
IPC 7 H04L29/06 H04N7/24

According to International Patent Classification (IPC) or to both national classification and IPC

B. FIELDS SEARCHED

Minimum documentation searched (classification system followed by classification symbols)
IPC 7 H04N H04L

Documentation searched other than minimum documentation to the extent that such documents are included in the fields searched

Electronic data base consulted during the international search (name of data base and, where practical, search terms used)

EPO-Internal, WPI Data, PAJ

C. DOCUMENTS CONSIDERED TO BE RELEVANT

Category °	Citation of document, with indication, where appropriate, of the relevant passages	Relevant to claim No.
X	WO 00 01151 A (SARNOFF CORP) 6 January 2000 (2000-01-06) abstract	7-11,14
Y	page 2, line 30 -page 3, line 15 page 4, line 7 -page 6, line 2 page 9, line 3 -page 12, line 21 claims 1,5,9,10 ---	12,13, 16,17
Y	US 5 822 524 A (HUANG SHIOW-LAANG ET AL) 13 October 1998 (1998-10-13)	12,13
A	column 3, line 40 -column 8, line 15 claims 1,5-21 --- -/--	1-11, 14-17

[X] Further documents are listed in the continuation of box C.

[X] Patent family members are listed in annex.

° Special categories of cited documents :

- "A" document defining the general state of the art which is not considered to be of particular relevance
- "E" earlier document but published on or after the international filing date
- "L" document which may throw doubts on priority claim(s) or which is cited to establish the publication date of another citation or other special reason (as specified)
- "O" document referring to an oral disclosure, use, exhibition or other means
- "P" document published prior to the international filing date but later than the priority date claimed
- "T" later document published after the international filing date or priority date and not in conflict with the application but cited to understand the principle or theory underlying the invention
- "X" document of particular relevance; the claimed invention cannot be considered novel or cannot be considered to involve an inventive step when the document is taken alone
- "Y" document of particular relevance; the claimed invention cannot be considered to involve an inventive step when the document is combined with one or more other such documents, such combination being obvious to a person skilled in the art.
- "&" document member of the same patent family

Date of the actual completion of the international search	Date of mailing of the international search report
21 June 2002	28/06/2002

Name and mailing address of the ISA	Authorized officer
European Patent Office, P.B. 5818 Patentlaan 2 NL - 2280 HV Rijswijk Tel. (+31-70) 340-2040, Tx. 31 651 epo nl, Fax: (+31-70) 340-3016	Karavassilis, N

Form PCT/ISA/210 (second sheet) (July 1992)

DISH EXHIBIT 2002, Page 1063
Aylo Freesites Ltd. v. Dish Technologies L.L.C.
IPR2024-00047

INTERNATIONAL SEARCH REPORT

ational Application No
PCT/GB 01/05246

C.(Continuation) DOCUMENTS CONSIDERED TO BE RELEVANT

Category °	Citation of document, with indication, where appropriate, of the relevant passages	Relevant to claim No.
Y	US 5 918 020 A (HENTHORN WILLIAM JOHN ET AL) 29 June 1999 (1999-06-29)	16,17
A	column 5, line 6 -column 6, line 55 column 8, line 58 -column 11, line 32 claim 1 -----	1-15

Form PCT/ISA/210 (continuation of second sheet) (July 1992)

DISH EXHIBIT 2002, Page 1064
Aylo Freesites Ltd. v. Dish Technologies L.L.C.
IPR2024-00047

INTERNATIONAL SEARCH REPORT

ational Application No
PCT/GB 01/05246

Patent document cited in search report		Publication date	Patent family member(s)		Publication date
WO 0001151	A	06-01-2000	WO	0001151 A1	06-01-2000
US 5822524	A	13-10-1998	NONE		
US 5918020	A	29-06-1999	NONE		

Form PCT/ISA/210 (patent family annex) (July 1992)

(12) INTERNATIONAL APPLICATION PUBLISHED UNDER THE PATENT COOPERATION TREATY (PCT)

(19) World Intellectual Property Organization
International Bureau

(43) International Publication Date
11 March 2004 (11.03.2004)

PCT

(10) International Publication Number
WO 2004/021668 A1

(51) International Patent Classification[7]: H04L 29/06, H04N 7/24, 7/26

(21) International Application Number: PCT/IB2003/003766

(22) International Filing Date: 21 August 2003 (21.08.2003)

(25) Filing Language: English

(26) Publication Language: English

(30) Priority Data:
02292121.7 28 August 2002 (28.08.2002) EP

(71) Applicant *(for all designated States except US)*: **KONINKLIJKE PHILIPS ELECTRONICS N.V.** [NL/NL]; Groenewoudseweg 1, NL-5621 BA Eindhoven (NL).

(72) Inventors; and
(75) Inventors/Applicants *(for US only)*: **GENTRIC, Philippe** [FR/FR]; 156 Boulevard Haussmann, F-75008 Paris (FR). **DELAHAYE, Nicolas** [FR/FR]; 156 Bd Haussmann, F-75008 PARIS (FR). **RAMANZIN, Yves** [FR/FR]; 156 Bd Haussmann, F-75008 PARIS (FR).

(74) Agent: **CHAFFRAIX, Jean**; Société Civile SPID, 156 Boulevard Haussmann, F-75008 Paris (FR).

(81) Designated States *(national)*: AE, AG, AL, AM, AT, AU, AZ, BA, BB, BG, BR, BY, BZ, CA, CH, CN, CO, CR, CU, CZ, DE, DK, DM, DZ, EC, EE, ES, FI, GB, GD, GE, GH, GM, HR, HU, ID, IL, IN, IS, JP, KE, KG, KP, KR, KZ, LC, LK, LR, LS, LT, LU, LV, MA, MD, MG, MK, MN, MW, MX, MZ, NI, NO, NZ, OM, PG, PH, PL, PT, RO, RU, SC, SD, SE, SG, SK, SL, SY, TJ, TM, TN, TR, TT, TZ, UA, UG, US, UZ, VC, VN, YU, ZA, ZM, ZW.

(84) Designated States *(regional)*: ARIPO patent (GH, GM, KE, LS, MW, MZ, SD, SL, SZ, TZ, UG, ZM, ZW), Eurasian patent (AM, AZ, BY, KG, KZ, MD, RU, TJ, TM), European patent (AT, BE, BG, CH, CY, CZ, DE, DK, EE, ES, FI, FR, GB, GR, HU, IE, IT, LU, MC, NL, PT, RO, SE, SI, SK, TR), OAPI patent (BF, BJ, CF, CG, CI, CM, GA, GN, GQ, GW, ML, MR, NE, SN, TD, TG).

Published:
— *with international search report*

For two-letter codes and other abbreviations, refer to the "Guidance Notes on Codes and Abbreviations" appearing at the beginning of each regular issue of the PCT Gazette.

(54) Title: METHOD OF STREAMING MULTIMEDIA DATA

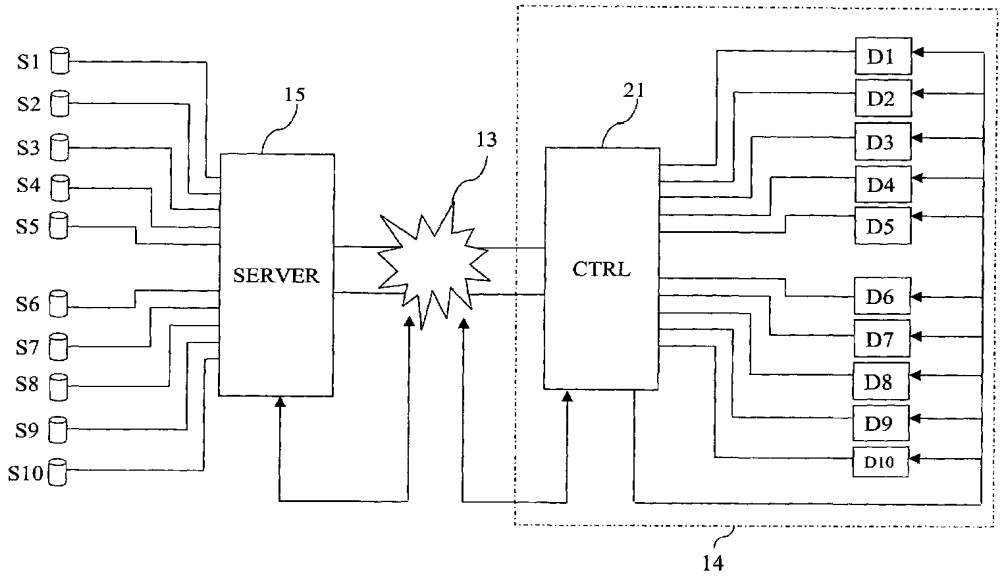

(57) Abstract: The invention relates to a method of streaming multimedia for providing seamless stream switching. The method consists in streaming multimedia data from a server (15) to a client (14) over a network (13) having a variable bandwidth. The client is intended to decode a subset of streams within a set of streams having various predetermined bit rates. The decoded subset of streams has bit rates compatible with the network bandwidth. The method comprises the steps of configuring the client so that the client can decode all the streams within the set of streams, playing all the streams within the set of streams and muting all the streams within the set of streams, except the subset of streams.

WO 2004/021668 A1

Method of streaming multimedia data.

FIELD OF THE INVENTION

The present invention relates to a method of streaming multimedia data from a server to a client over a network having a variable bandwidth, the client being intended to decode a subset of streams within a set of streams having various predetermined bit rates, said subset of streams having bit rates compatible with the network bandwidth.

The present invention also relates to a server and a client for carrying out this method, a telecommunication system implementing this method and a computer program for carrying out this method.

The present invention is particularly relevant for systems of multimedia streaming over networks whose effective instantaneous bandwidth may vary with time. For example, it applies to transmissions over mobile telephony systems using various transmission standards such as MPEG-4 (Moving Expert Picture Group – 4) or H263.

BACKGROUND OF THE INVENTION

Multimedia networks such as the GPRS (General Packet Radio System) or UMTS (Universal Mobile Telephony System) and the Internet do not provide a guaranteed quality of service. The effective instantaneous bandwidth varies with time because of congestions, transmission errors or resource sharing for instance. In the framework of multimedia streaming over such networks, adaptation mechanisms to these variations have to be provided in order to minimize data losses on the one hand and maximize the quality of the content received by the client on the other hand.

A classical approach to this problem is known as "Stream Switching". The same content is encoded by a media encoder into a set of streams at several bit rates. With respect to the currently available bandwidth, an adequate stream, i.e. having an adequate bit rate with respect to the available bandwidth, is selected to be transmitted to the client via a media server, which operates the corresponding stream switching, for selecting said adequate stream to be sent.

The way a stream switching is usually performed is described hereinafter. Based on the bit rates of the various streams and on the available bandwidth, the

server selects a stream having a bit rate compatible with the available bandwidth. The server can also select a subset of streams, when the client is intended to decode simultaneously many streams, e.g. an audio and a video stream. In the following, a "subset of streams" shall designate one stream or a few streams. If the selected subset of streams differs from the subset of streams currently decoded by the client, a stream switching is performed.

In order to perform such a stream switching, information concerning the selected subset of streams is communicated to the client, so that the client can change its configuration in order to be able to decode this selected subset of streams, with respect to the content and bit rates of this selected subset of streams.

Thus, when a server switches from one subset of streams to another one, e.g. in order to adapt the bit rate of the delivered subset of streams to the available bandwidth of the network, a new decoder configuration corresponding to the new delivered subset of streams has to be sent to the client decoder. The decoder is then reinitialised with the new decoder configuration. The stream switching is therefore not seamless for the client and may impact the service quality from the end user's point of view.

For example, suppose one wants to perform a stream switching using the IETF (Internet Engineering Task Force) standard, which is RTSP (Real Time Streaming Protocol) described in "Real Time Streaming Protocol (RTSP), RFC2326, April 1998" written by Schulzrinne H. et al. The following commands have to be sent by the client to the server :

- TEARDOWN : to stop the current subset of streams
- DESCRIBE : to get information on the new subset of streams
- SETUP : to configure the new session, ie to indicate to the server that the decoder has been reinitialised
- PLAY : to start streaming the new subset of streams in the new session.

These commands and the answer to these commands require a long time, for example a few seconds. Actually, each request from the client to the server is followed by an acknowledgment sent by the server to the client, which means that each command requires a whole round trip over the network. The service is therefore interrupted on the end user side during a few seconds, which is not acceptable.

SUMMARY OF THE INVENTION

It is an object of the invention to provide a method of streaming multimedia data, which leads to a seamless stream switching.

To this end, a method of streaming multimedia data according to the invention, as described in the opening paragraph, is characterised in that it comprises the steps of configuring the client so that the client can decode all the streams within the set of streams, playing all the streams within the set of streams and muting all the streams within the set of streams, except the subset of streams.

According to the invention, the client decoder is first configured in order to be able to decode all streams within the set of streams. Then, all streams within the set of streams are played, but a large number of these streams are muted, i.e. they do not reach the final decoder in order to be decoded. Only the subset of streams compatible with the network bandwidth is not muted, i.e. reaches the client decoder to be decoded. When a stream switching is to be performed between a currently decoded subset of streams and a next subset of streams, the currently decoded subset of streams is muted and the next subset of streams is simply unmuted. Such a stream switching thus only requires muting and unmuting two subsets of streams, and does not require any configuration of a new session. Such a stream switching is therefore seamless.

Advantageously, the step of muting all the streams except the subset of streams is performed by the server on a request from the client in accordance with the MUTE/UNMUTE extension of the Real Time Streaming Protocol. The method uses standard IETF protocols so that servers and clients implemented by different parties can interoperate.

These and other aspects of the invention will be apparent from and elucidated with reference to the embodiments described hereinafter.

BRIEF DESCRIPTION OF THE DRAWINGS

The invention will now be described in more detail, by way of example, with reference to the accompanying drawings, in which:

- Fig. 1 is a block diagram illustrating a telecommunication system comprising a server and a client according to the invention;
- Fig. 2 is a block diagram illustrating a telecommunication system with a client according to a first embodiment of the invention;

- Fig. 3 is a block diagram illustrating a telecommunication system with a client according to a second embodiment of the invention;
- Fig. 4 is a diagram for illustrating a method of streaming and a stream switching according to the invention.

DETAILED DESCRIPTION OF THE INVENTION

A telecommunication system according to the invention is depicted in Fig.1. Such a telecommunication system comprises a server 15 comprising playing means 11 and muting means 12, a network 13 and a client 14. The network 13 is, for example, a mobile radiotelephony network or the Internet network.

The server 15 receives a set of streams {S1, S2, S3, S4}. These streams correspond to a multimedia content produced by a multimedia source, after encoding. For a given multimedia source, all the produced encoded streams within the set {S1, S2, S3, S4} comprise the same multimedia content, but have different predetermined bit rates. The bit rates are predetermined in order for the system to be able to provide the client 14 with a set of various qualities of services, selected on the one hand with respect to the nature of the transmitted content, each content (audio, fixed images, video, etc.) requiring a specific available bandwidth, and on the other hand with respect to the quality of service required by the end user on the client side.

The various available bit rates are also useful to enable the system to cope with variations of the available bandwidth, which often cause a reduction of the bit rate of the transmitted streams. As a matter of fact, the network's effective bandwidth may vary with time with respect to several parameters. These parameters include current traffic and radio transmission conditions, which may considerably affect the current available bandwidth. With respect to this current available bandwidth and the required quality of service, the adequate stream has to be delivered to the client 13.

The method of streaming multimedia data according to the invention is described hereinafter. When the client 14 desires to decode a multimedia content, it first asks the server 15 for information about the various streams S1 to S4 comprising this multimedia content. This information comprises the bit rates of each stream S1 to S4. Using this information, the client 13 is configured so that it can decode all the streams within the set of streams {S1, S2, S3, S4}. How such a

configuration is performed is described in Figs.2 and 3. Then, according to the available network bandwidth, a subset of streams is selected, which is to be decoded by the client 14.

The measure of the available bandwidth can be performed by the server 15. In this case, the server 15 will select the subset of streams to be decoded by the client 14. This is particularly advantageous when the server 15 has information about the client 14, for example the various decoders available in client 14. The measure of the available bandwidth can also be performed by the client 14. In this case, the client 14 will select the subset of streams to be decoded. This would be the case, for example, in a mobile radiotelephony network, where a lot of different clients are linked to a same server. Actually, in such a network, the server 15 cannot have information about all the clients in the network. The available bandwidth can also be measured by the server 15 and sent to the client 14, which will then select the subset of streams to be decoded.

Suppose the subset of streams to be decoded by the client 14 is the stream S1. Then all the streams within the set of streams {S1, S2, S3, S4} are played by the server 15, thanks to the playing means 11, but the streams S2, S3 and S4 are muted, thanks to the muting means 12. Playing and muting a stream means that the stream is virtually played by the playing means 11, but the stream does not reach the client 14 and the virtual play does not consume any resource on the server side. For example, suppose a stream comprises 10 stream elements enumerated 1 to 10, the first stream element 1 being played at a first time t1, the second stream element 2 at a time t2 and so on, and suppose the stream is muted at time t4 and unmuted at time t8. Then the client 14 receives the stream elements 1 to 3 and, after a time equal to t8-t4, the client 14 receives the stream elements 8 to 10.

As the streams S2, S3 and S4 are muted, the client 14 only receives the stream S1 and can decode this stream because it has been configured in order to be able to decode all the streams. Suppose the available bandwidth changes and a stream switching is to be performed, for example the stream S2 is selected to be decoded by the client 14. In order to perform such a stream switching, the stream S1 is muted and the stream S2 is unmuted, so that only the stream S2 reaches the client 14, which stream S2 can be decoded by the client 14 because it has been configured in order to be able to decode all the streams.

The method in accordance with the invention thus allows performing a seamless stream switching. Actually, the time required to mute a stream and unmute another stream on the server side is very small, so that there is no service interruption on the client side, which could be noticed by an end user. The end user on the client side might be aware that a stream switching has been performed, because the quality of the currently decoded stream might have changed. Compared to a stream switching in accordance with the state of the art, the stream switching performed by the method in accordance with the invention does not require configuring a new session each time a new stream is selected to be decoded by the client 14, because a session is already established for each stream within the set of streams {S1, S2, S3, S4}, as these streams are played by the playing means 11. As a consequence, the stream switching according to the invention is much more seamless than a stream switching according to the state of the art.

It is important to notice than the muting means 12 might be separated from the server 15. For example, the muting means 12 might be a separate device placed between the server 15 and the client 13, or might form part of the client 14.

Fig. 2 illustrates a telecommunication system according to a first embodiment of the invention. This telecommunication system comprises the server 15, the network 13 and the client 14. The client 14 comprises a controller 21 and ten decoders D1 to D10.

In the following example, a multimedia content to be decoded by the client 14 has been encoded into 10 streams S1 to S10, forming a set of streams {S1-S10}. The five first streams S1 to S5 contain a video content and the five last streams S6 to S10 contain an audio content. Playing the multimedia content consists in playing one video stream and one audio stream. Examples of streams S1 to S10 are given in the 2 following tables, which principally define the formats of the streams and their bit rates.

Stream	Format	Size	Profile	Frames/sec	Bit Rate
S1	H263	QCIF	Single	2	25
S2	MPEG-4 video	QCIF	Single	10	50

S3	MPEG-4 video	QCIF	Single	25	100
S4	MPEG-4 video	CIF	Single	25	200
S5	MPEG-4 video	CIF	Advanced simple	25	400

Stream	Format	Bit Rate
S6	Adaptive Multi-Rate	5
S7	Code Excited Linear Prediction	10
S8	Advanced Audio Coding mono	32
S9	Advanced Audio Coding stereo	64
S10	Advanced Audio Coding + advanced tools	128

When the client 14 desires to decode the multimedia content, the controller 21 asks for information about each stream S1 to S10. For example, the multimedia content might be contained in a file, which has an URL address (URL stands for Universal Resource Locator). Knowing the address of the content, the controller 21 asks for a description of the streams comprising this multimedia content, by sending a request to the server 15 via the network 13. For example, if the RTSP protocol is used, such a request is a "DESCRIBE" command which has the following structure:

DESCRIBE rtsp://movie RTSP/1.0
CSeq: 1.

In this command, the URL address of the multimedia content is "rtsp://movie", the protocol used is "RTSP/1.0" and the sequence number Cseq of this message is 1.

The server 15 then sends the descriptions of the streams comprising the desired multimedia content. The messages sent by the server 15 to the client 14 have the following structure:

RTSP/1.0 200 OK
CSeq: 1

```
Content-Type: application/sdp
Content-Length: xxx

a=control:rtsp://movie
t=0 0

m=video 7722 RTP/AVP 96
a=rtpmap:96 MP4V-ES/1000
a=control:rtsp://movie/video1
a=br:400

m=audio 7724 RTP/AVP 97
a=rtpmap:97 mpeg4-generic/44100/2
a=control:rtsp://movie/audio1
a=br:128

m=video 7726 RTP/AVP 98
a=rtpmap:98 MP4V-ES/1000
a=control:rtsp://movie/video2
a=br:200

m=audio 7724 RTP/AVP 99
a=rtpmap:99 mpeg4-generic/44100/2
a=control:rtsp://movie/audio2
a=br:68
```

These messages correspond to a description of the streams S5, S10, S4 and S9, respectively.

As the description of a given stream comprises the format of the stream and its bit rate, the controller can configure one of its decoders so that this decoder is able to decode the given stream. In the example of Fig.2, the decoder D1 is configured to decode the stream S1, the decoder D2 is configured to decode the stream S2 and so on.

The client 14 and the server 15 also have to agree on transport parameters, i.e. UDP port numbers. This is effected thanks to a SETUP command, which has the following structure, given for the stream S10:

```
SETUP rtsp://movie/audio1 RTSP/1.0
CSeq: 2
Transport: RTP/AVP;unicast;client_port=8000-8001
```

The server then answers this message by sending a message having the following structure :

```
RTSP/1.0 200 OK
CSeq: 2
Transport: RTP/AVP;unicast;client_port=8000-8001;
        server_port=9000-9001
Session: 12345678
```

In the following, we suppose that the measure of the bandwidth is performed by the client 14, e.g. by the controller 21, and that the client 14 selects the subset of streams compatible with the available bandwidth.

Once the decoders of the client 14 have been configured, a subset of streams to be decoded by the client 14 is selected, for example the streams S5 and S10.

Then the controller 21 requests that the streams S1 to S4 and S6 to S9 are muted. Such a request is sent via the network 13 to the server 15, which comprises muting means. If the RTSP protocol is used, such a request uses the MUTE extension of this protocol, and has the following structure, given for the streams S9 and S4 :

```
MUTE rtsp://movie/audio2 RTSP/1.0
CSeq: 8
Session: 12345678

MUTE rtsp://movie/video2 RTSP/1.0
```

CSeq: 9
Session: 12345678

The streams S1 to S10 are then played by the server 15. For example, the client 14 can request that the streams S1 to S10 are played. If the RTSP protocol is used, such a request uses the PLAY command and has the following structure :

PLAY rtsp://movie RTSP/1.0
CSeq: 12
Range: npt=0-
Session: 12345678

The server then sends an acknowledgment, which has the following structure:

RTSP/1.0 200 OK
CSeq: 12
Session: 12345678

As all streams within the set of streams {S1-S10} are muted, except the streams S5 and S10, the streams S5 and S10 reaches the controller 21, which sends them to the decoders D5 and D10, respectively. The controller might comprise switches or multiplexers in order to send the incoming streams to the right decoders. The controller 21 might also comprise a plurality of ports, each assigned to one decoder, and receive a given stream on the port corresponding to the decoder intended to decode this given stream.

Suppose a stream switching is to be performed because the available bandwidth has decreased. For example, the client 14 would like to play the streams S4 and S9, which have lower bit rates than the streams S5 and S10, respectively. The controller 21 then requests that the streams S5 and S10 are muted and that the streams S4 and S9 are unmuted. Such a request is sent via the network 13 to the server 15. If the RTSP protocol is used, such a request uses the MUTE/UNMUTE extension of this protocol, and has the following structure:

MUTE rtsp://movie/audio1 RTSP/1.0
CSeq: 13
Session: 12345678

MUTE rtsp:/movie/video1 RTSP/1.0
CSeq: 14
Session: 12345678

UNMUTE rtsp://movie/audio2 RTSP/1.0
CSeq: 15
Session: 12345678

UNMUTE rtsp://movie/video2 RTSP/1.0
CSeq: 16
Session: 12345678

The server then sends an acknowledgment, which has the following structure:

RTSP/1.0 200 OK
CSeq: 13
Session: 12345678

RTSP/1.0 200 OK
CSeq: 14
Session: 12345678

RTSP/1.0 200 OK
CSeq: 15
Session: 12345678

RTSP/1.0 200 OK
CSeq: 16
Session: 12345678

Then, when the streams S4 and S9 reach the client 14, the controller 21 sends them to the decoders D4 and D9, respectively.

Fig. 3 illustrates a telecommunication system according to a second embodiment of the invention. The client 14 comprises two decoders D1 and D2, and two memories 31 and 32. The first decoder D1 is able to decode video streams and the second decoder D2 is able to decode audio streams.

In this embodiment, the decoders D1 and D2 are configured by means of configuring parameters, which are loaded in the memories 31 and 32. When the server 15 sends a description of each stream within the set of streams {S1-S10} via the network 13 to the client 14, the controller 21 computes decoding parameters P1 to P10 and loads these parameters into the memories 31 and 32. The parameters P1 are computed in such a way that, knowing these parameters, the decoder D1 is able to decode the stream S1. The parameters P2 are computed in such a way that, knowing these parameters, the decoder D1 is able to decode the stream S2, and so on. The parameters P1 to P5 are loaded into the memory 31 and used to configure the decoder D1. The parameters P6 are computed in such a way that, knowing these parameters, the decoder D2 is able to decode the stream S6, and so on. The parameters P6 to P10 are loaded into the memory 32 and used to configure the decoder D2.

When a given subset of streams is to be decoded by the client 14, as has been described hereinbefore, the configuring parameters corresponding to this given subset of streams are sent to the decoders D1 and D2 by the controller 21, in order to configure these decoders so that they can decode the given subset of streams. Such a configuration might require a certain time. When a stream switching is effected, a new configuration has to be sent to the decoders, i.e. new configuring parameters have to be sent to the decoders.

Suppose the stream S1 is decoded by the decoder D1, and a stream switching is effected in order to decode the stream S2. The decoder D1 keeps its configuration corresponding to the parameters P1 until there is no more data from the stream S1 reaching the decoder D1. At that time, the stream S2 reaches the decoder D1, but the decoder D1 is not able to decode the stream S2 because the reconfiguration requires a certain time. This might lead to service interruptions. To

solve this problem, a buffer might be used between the decoder and a display intended to display the decoded streams. This buffer stores decoded streams, i.e. audio and/or video, corresponding to a time which is at least the time required for the reconfiguration of the decoders.

Thanks to this buffer, the end user does not detect any service interruption, because decoded streams are fetched from the buffer and displayed while the decoders are being reconfigured.

Fig.4 illustrates a method of streaming multimedia and a stream switching according to the invention. Such a method might be implemented by the client 14 of Figs. 2 and 3.

At step 401, the client 14 desires to decode a multimedia content, which is, for example, comprised in a file having an URL address. At step 402, the client 14 asks for information about the various streams comprising the multimedia content. At step 403, the client is configured in order to be able to decode all the streams comprising the desired multimedia content. Such a configuration might be performed as has been described in Fig. 2 or 3.

At step 404, the client 14 requests that the streams comprising the desired multimedia content are played and, at step 405, the client requests that the streams are muted, except a subset of streams which the client desires to decode, i.e. the subset of streams having bit rates compatible with the current available bandwidth. The steps 404 and 405 advantageously are simultaneous. At step 406, the unmuted subset of streams, which reaches the client 14, is decoded. This step 406 might require a decoder configuration if a client in accordance with the second embodiment of the invention is used, as has been described in Fig.3.

At step 407, the client 14 checks if the bandwidth has changed. If the bandwidth has not changed, the currently decoded subset of streams stays unmuted and the client 14 decodes this subset of streams. If the bandwidth has changed, a subset of streams to be decoded is selected according to the new available bandwidth, at step 408. If this subset of streams is different from the currently decoded subset of streams, the client requests, at step 409, that the currently decoded subset of streams is muted and, at step 410, that the new subset of streams to be decoded is unmuted. The steps 409 and 410 advantageously are simultaneous. Then, the new subset of streams is decoded at step 406.

The method for streaming multimedia according to the invention can be implemented in an integrated circuit, which is intended to be integrated in a server or in a client. A set of instructions that is loaded into a program memory causes the integrated circuit to carry out the method for streaming multimedia. The set of instructions may be stored on a data carrier such as, for example, a disk. The set of instructions can be read from the data carrier so as to load it into the program memory of the integrated circuit, which will then fulfil its role.

Any reference sign in the following claims should not be construed as limiting the claim. It will be obvious that the use of the verb "to comprise" and its conjugations does not exclude the presence of any other elements or steps besides those defined in any claim. The word “a” or “an” preceding an element or a step does not exclude the presence of a plurality of such elements.

Claims

1. A method of streaming multimedia data from a server (15) to a client (14) over a network (13) having a variable bandwidth, the client being intended to decode a subset of streams within a set of streams (S1, S10) having various predetermined bit rates, said subset of streams having bit rates compatible with the network bandwidth, the method being further characterised in that it comprises the steps of configuring the client so that the client can decode all the streams within the set of streams, playing all the streams within the set of streams and muting all the streams within the set of streams, except the subset of streams.

2. A method of streaming multimedia data according to claim 1, wherein the step of muting all the streams except the subset of streams is performed by the server on a request from the client in accordance with the MUTE/UNMUTE extension of the Real Time Streaming Protocol.

3. A server (15) for serving a client (14) with a subset of streams over a network (13) having a variable bandwidth, said server comprising means for selecting the subset of streams within a set of streams having various predetermined bit rates, means for playing (11) all the streams within the set of streams and means for muting (12) all the streams within the set of streams, except the subset of streams.

4. A server as claimed in claim 3, wherein the means for selecting the subset of streams comprise means for measuring the network bandwidth.

5. A server as claimed in claim 3, wherein the means for selecting the subset of streams are controlled by a request from the client.

6. A client (14) intended to decode a subset of streams within a set of streams having various predetermined bit rates, said streams being sent over a network (13) having a variable bandwidth, said client comprising configuring means (21) in order to be able to decode all the streams within the set of streams, means for selecting a subset of streams having bit rates compatible with the network bandwidth and means for muting all the streams within the set of streams, except the subset of streams.

7. A telecommunication system comprising a server for serving a client with a subset of streams, said server comprising means for selecting the subset of streams within a set of streams having various predetermined bit rates, means for playing all the streams within the set of streams and means for muting streams, a network having a variable bandwidth and a client intended to decode the subset of streams, said client comprising configuring means in order to be able to decode all the streams within the set of streams, means for selecting a subset of streams having bit rates compatible with the network bandwidth and means for requesting that all the streams within the set of streams, except the subset of streams, are muted.

8. A computer program comprising a set of instructions which, when loaded into a processor or a computer, causes the processor or the computer to carry out the method as claimed in Claim 1.

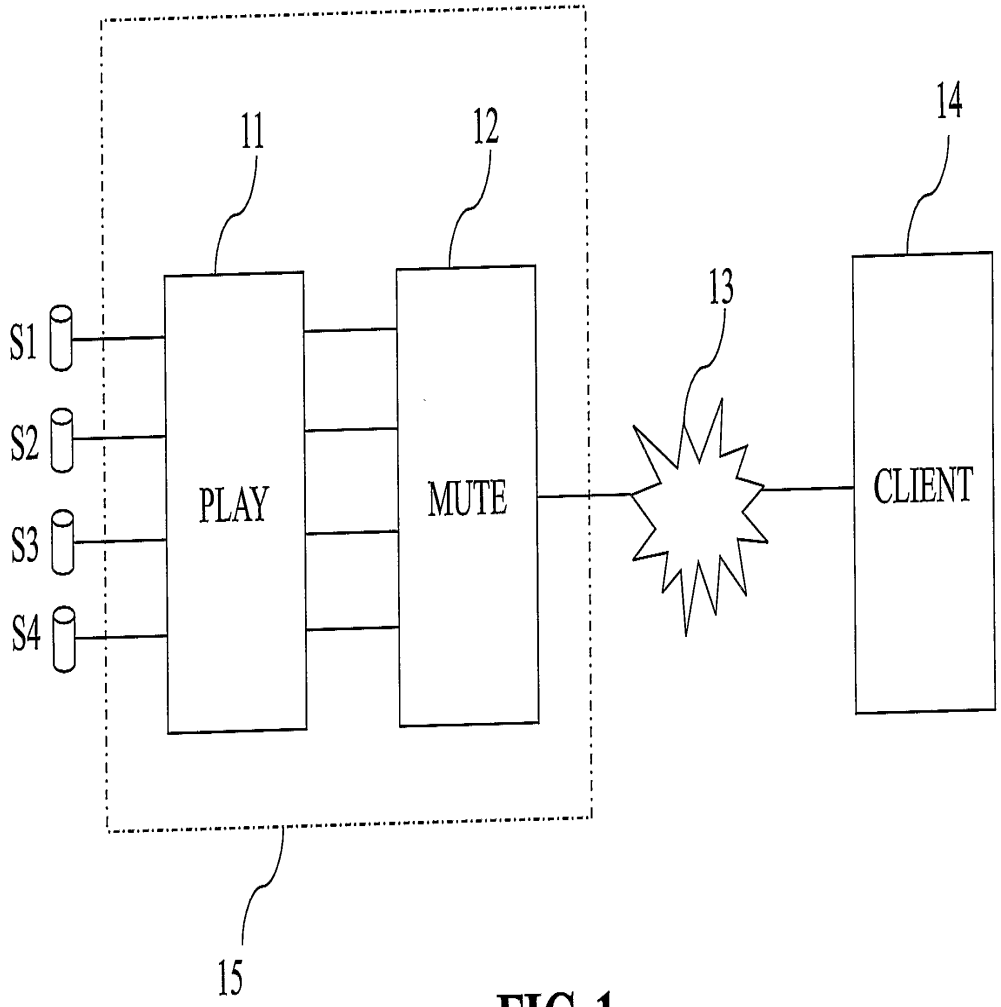

FIG. 1

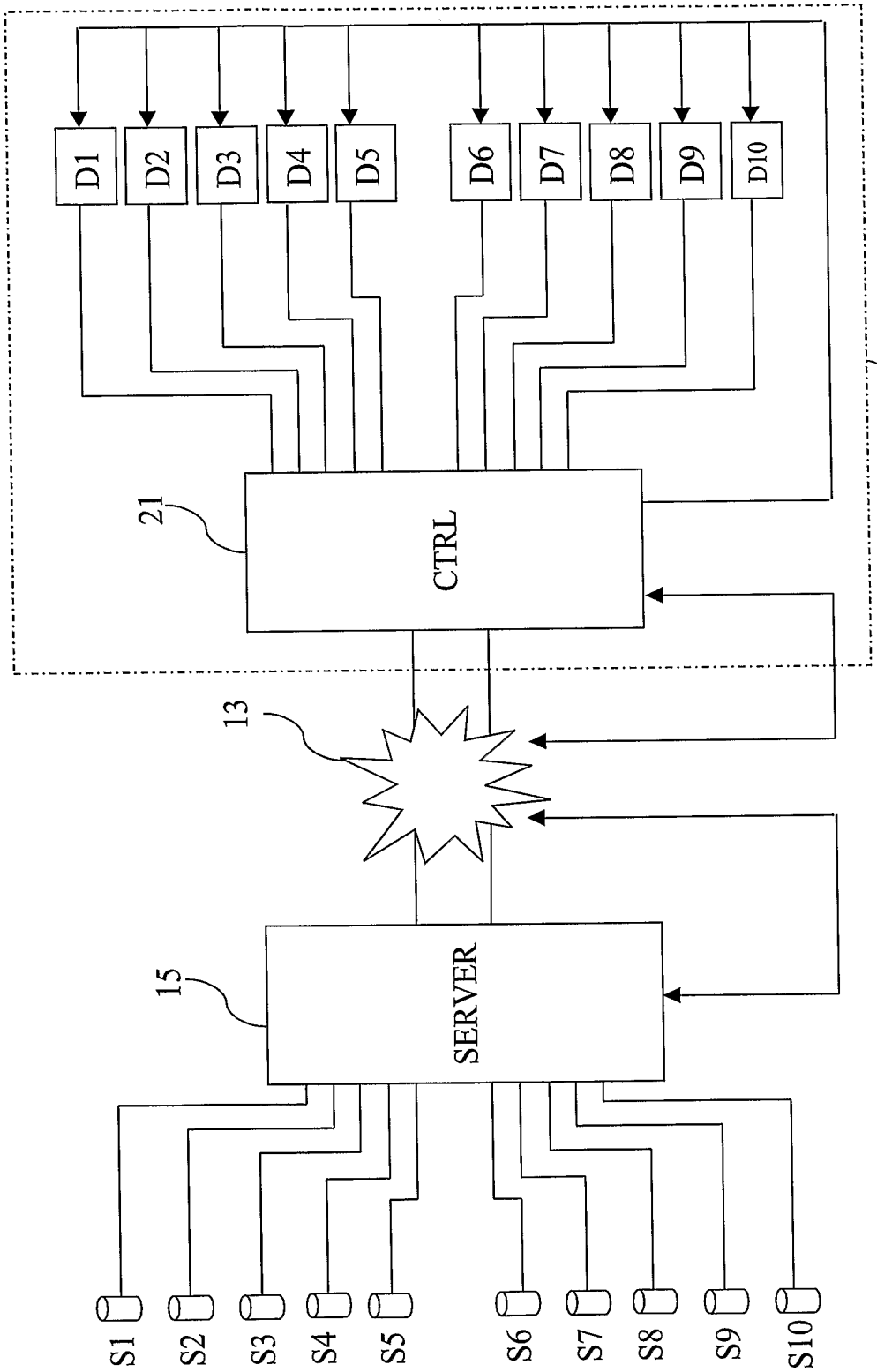
D1
D2
D3
D4
D5
D6
D7
D8
D9
D10
14
21
CTRL
13
15
SERVER
S1
S2
S3
S4
S5
S6
S7
S8
S9
S10

FIG. 2

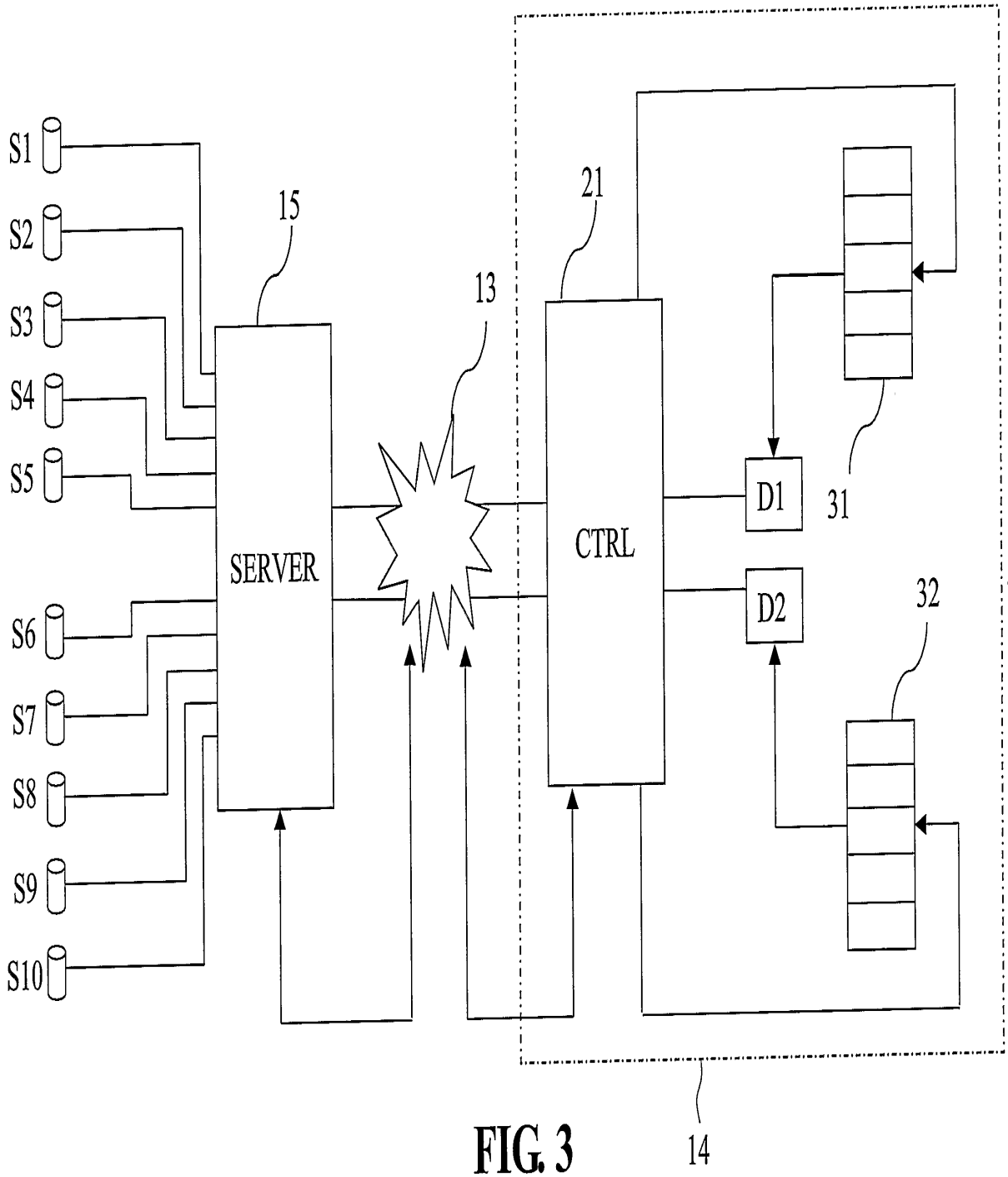

FIG. 3

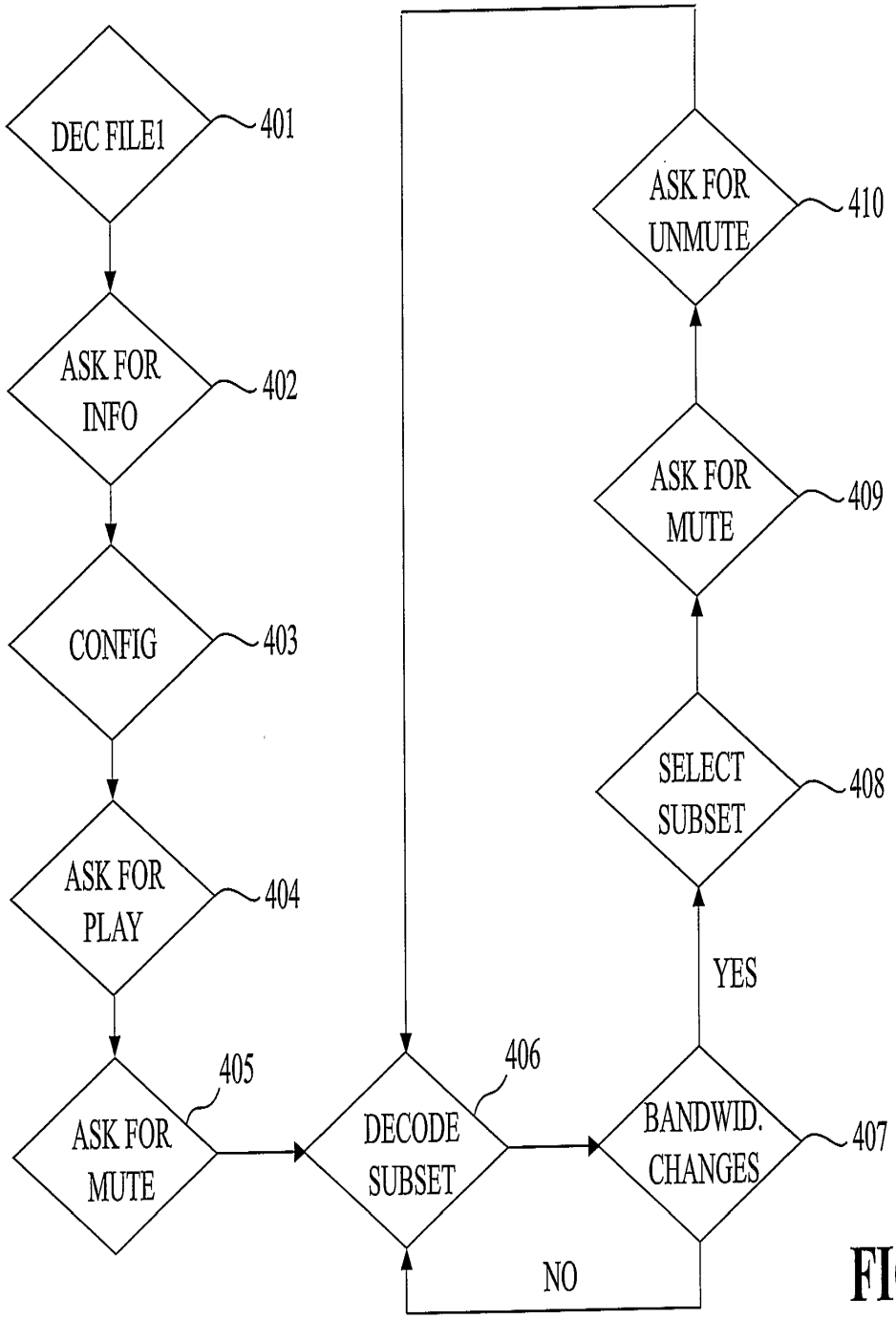
DEC FILE1
401
ASK FOR INFO
402
CONFIG
403
ASK FOR PLAY
404
ASK FOR MUTE
405
DECODE SUBSET
406
BANDWID. CHANGES
407
SELECT SUBSET
408
ASK FOR MUTE
409
ASK FOR UNMUTE
410
YES
NO

FIG. 4

INTERNATIONAL SEARCH REPORT

Internatio plication No
PCT/IB 03/03766

A. CLASSIFICATION OF SUBJECT MATTER
IPC 7 H04L29/06 H04N7/24 H04N7/26

According to International Patent Classification (IPC) or to both national classification and IPC

B. FIELDS SEARCHED

Minimum documentation searched (classification system followed by classification symbols)
IPC 7 H04L H04N

Documentation searched other than minimum documentation to the extent that such documents are included in the fields searched

Electronic data base consulted during the international search (name of data base and, where practical, search terms used)
EPO-Internal, WPI Data

C. DOCUMENTS CONSIDERED TO BE RELEVANT

Category °	Citation of document, with indication, where appropriate, of the relevant passages	Relevant to claim No.
X	WO 02 45372 A (BRITISH TELECOMM ;JACOBS RICHARD JAMES (GB); NILSSON MICHAEL ERLIN) 6 June 2002 (2002-06-06) page 5, line 4 - line 18 page 6, line 9 - line 17 page 7, line 5 - line 32 page 9, line 23 - line 33 ---	1-8
X	GB 2 367 219 A (VINTAGE GLOBAL) 27 March 2002 (2002-03-27) figures 1-5 page 4, paragraph 1 -page 5, paragraph 3 page 9, paragraph 2 - paragraph 4 page 10, paragraph 4 page 11, paragraphs 3-5 ---	1-8

-/--

[X] Further documents are listed in the continuation of box C.

[X] Patent family members are listed in annex.

° Special categories of cited documents :

"A" document defining the general state of the art which is not considered to be of particular relevance
"E" earlier document but published on or after the international filing date
"L" document which may throw doubts on priority claim(s) or which is cited to establish the publication date of another citation or other special reason (as specified)
"O" document referring to an oral disclosure, use, exhibition or other means
"P" document published prior to the international filing date but later than the priority date claimed

"T" later document published after the international filing date or priority date and not in conflict with the application but cited to understand the principle or theory underlying the invention
"X" document of particular relevance; the claimed invention cannot be considered novel or cannot be considered to involve an inventive step when the document is taken alone
"Y" document of particular relevance; the claimed invention cannot be considered to involve an inventive step when the document is combined with one or more other such documents, such combination being obvious to a person skilled in the art.
"&" document member of the same patent family

Date of the actual completion of the international search	Date of mailing of the international search report
19 November 2003	23/12/2003
Name and mailing address of the ISA European Patent Office, P.B. 5818 Patentlaan 2 NL – 2280 HV Rijswijk Tel. (+31–70) 340–2040, Tx. 31 651 epo nl, Fax: (+31–70) 340–3016	Authorized officer Megalou, M

Form PCT/ISA/210 (second sheet) (July 1992)

DISH EXHIBIT 2002, Page 1087
Aylo Freesites Ltd. v. Dish Technologies L.L.C.
IPR2024-00047

INTERNATIONAL SEARCH REPORT

Internatior lication No
PCT/IB 03/03766

C.(Continuation) DOCUMENTS CONSIDERED TO BE RELEVANT

Category °	Citation of document, with indication,where appropriate, of the relevant passages	Relevant to claim No.
X	EP 0 986 265 A (VICTOR COMPANY OF JAPAN) 15 March 2000 (2000-03-15) paragraphs '0018!,'0019! ---	1,3,8
P,X	WO 03 065683 A (RAMANZIN YVES ;GENTRIC PHILIPPE (NL); KONINKL PHILIPS ELECTRONICS) 7 August 2003 (2003-08-07) page 3, line 19 -page 4, line 5 page 7, line 17 - line 23 figure 5 -----	1-8

Form PCT/ISA/210 (continuation of second sheet) (July 1992)

DISH EXHIBIT 2002, Page 1088
Aylo Freesites Ltd. v. Dish Technologies L.L.C.
IPR2024-00047

INTERNATIONAL SEARCH REPORT

Info — on patent family members

Internation lication No
PCT/IB 03/03766

Patent document cited in search report		Publication date	Patent family member(s)			Publication date
WO 0245372	A	06-06-2002	AU	2209702	A	11-06-2002
			CA	2428325	A1	06-06-2002
			EP	1338131	A2	27-08-2003
			WO	0245372	A2	06-06-2002
GB 2367219	A	27-03-2002	NONE			
EP 0986265	A	15-03-2000	SG	77650	A1	16-01-2001
			EP	0986265	A2	15-03-2000
			JP	2000101537	A	07-04-2000
WO 03065683	A	07-08-2003	WO	03065683	A1	07-08-2003

(12) INTERNATIONAL APPLICATION PUBLISHED UNDER THE PATENT COOPERATION TREATY (PCT)

(19) World Intellectual Property Organization
International Bureau

(43) International Publication Date
17 August 2006 (17.08.2006)

PCT

(10) International Publication Number
WO 2006/086717 A1

(51) International Patent Classification:
H04L 29/06 (2006.01)

(21) International Application Number:
PCT/US2006/004896

(22) International Filing Date:
10 February 2006 (10.02.2006)

(25) Filing Language: English

(26) Publication Language: English

(30) Priority Data:
10-2005-0011679
11 February 2005 (11.02.2005) KR

(71) Applicant *(for all designated States except US)*: **VIDIATOR ENTERPRISES INC.** [BS/BS]; P.O. Box CB-12751, Nassau, New Providence (BS).

(71) Applicant *(for OM only)*: **DE GUZMAN, Dennis, M.** [US/US]; 701 5th Avenue, Suite 6300, Seattle, WA 98104 (US).

(72) Inventors; and
(75) Inventors/Applicants *(for US only)*: **LEE, Jaeyong** [KR/KR]; Shindong-a Apt. 707-603, Suseo-dong, Gangnam-gu, Seoul 135-782 (KR). **YOON, Jong-Sung** [KR/KR]; Sinbanpo Hanshin Apt. 29-502, Banpo 2(i)-dong, Seocho-Gu, Seoul 137-767 (KR).

(74) Agents: **DE GUZMAN, Dennis, M.** et al.; Seed Intellectual Property Law Group PLLC, Suite 6300, 701 Fifth Avenue, Seattle, WA 98104-7092 (US).

(81) Designated States *(unless otherwise indicated, for every kind of national protection available)*: AE, AG, AL, AM, AT, AU, AZ, BA, BB, BG, BR, BW, BY, BZ, CA, CH, CN, CO, CR, CU, CZ, DE, DK, DM, DZ, EC, EE, EG, ES, FI, GB, GD, GE, GH, GM, HR, HU, ID, IL, IN, IS, JP, KE, KG, KM, KN, KP, KR, KZ, LC, LK, LR, LS, LT, LU, LV, LY, MA, MD, MG, MK, MN, MW, MX, MZ, NA, NG, NI, NO, NZ, OM, PG, PH, PL, PT, RO, RU, SC, SD, SE, SG, SK, SL, SM, SY, TJ, TM, TN, TR, TT, TZ, UA, UG, US, UZ, VC, VN, YU, ZA, ZM, ZW.

(84) Designated States *(unless otherwise indicated, for every kind of regional protection available)*: ARIPO (BW, GH, GM, KE, LS, MW, MZ, NA, SD, SL, SZ, TZ, UG, ZM, ZW), Eurasian (AM, AZ, BY, KG, KZ, MD, RU, TJ, TM), European (AT, BE, BG, CH, CY, CZ, DE, DK, EE, ES, FI, FR, GB, GR, HU, IE, IS, IT, LT, LU, LV, MC, NL, PL, PT, RO, SE, SI, SK, TR), OAPI (BF, BJ, CF, CG, CI, CM, GA, GN, GQ, GW, ML, MR, NE, SN, TD, TG).

[Continued on next page]

(54) Title: METHOD OF MULTIPLE FILE STREAMING SERVICE THROUGH PLAYLIST IN MOBILE ENVIRONMENT AND SYSTEM THEREOF

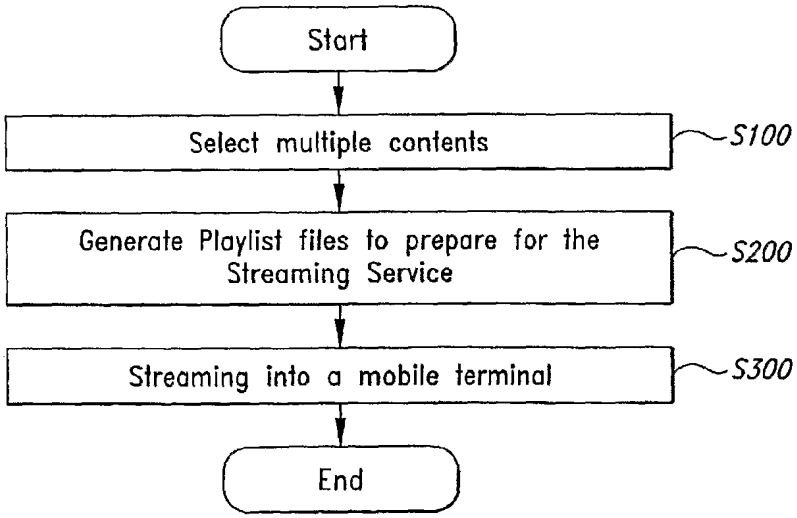

(57) Abstract: The present disclosure pertains to a method of streaming content media files using a Portable Terminal and system thereof . More specifically, in the event of streaming multiple content files in a mobile environment, this disclosure pertains to a method of combining multiple content files into one streaming file through the Playlist Generator provided for the Streaming Server (S200) and then streaming the entire file at once to a Portable Terminal (S300) and system thereof in order to resolve problems with the existing technology, wherein after streaming for 1 content file is all completed, one must request the Streaming Server for another session again in order to stream subsequent content files.

WO 2006/086717 A1

Published:

— *with international search report*

— *before the expiration of the time limit for amending the claims and to be republished in the event of receipt of amendments*

For two-letter codes and other abbreviations, refer to the "Guidance Notes on Codes and Abbreviations" appearing at the beginning of each regular issue of the PCT Gazette.

METHOD OF MULTIPLE FILE STREAMING SERVICE THROUGH PLAYLIST IN MOBILE ENVIRONMENT AND SYSTEM THEREOF

TECHNICAL FIELD

The present disclosure pertains to a method of streaming content media files to a Portable Terminal and system thereof.

More specifically, in the event of streaming multiple content files in a mobile environment, this disclosure pertains to a method of combining multiple content files into one streaming file through Playlist Generator provided for the Streaming Server and then streaming the entire file at once to a Portable Terminal and system thereof in order to resolve problems with the existing technology, wherein after streaming for 1 content file is all completed, one must request the Streaming Server for another session again in order to stream subsequent content files.

BACKGROUND INFORMATION

In step with the increase of Internet users and development of related technology, not only simple text-oriented data but also a variety of multimedia data are widely being processed over the web. Previously, an entire file had to be downloaded in order to replay multimedia data that is transmitted over the web, but in the case of large multimedia data, excessively long initial lag time was sited as a big problem. And although reliable transmission was guaranteed as TCP was used as the transmission protocol, there is a problem in that the time relationship among audio/video packets was being destroyed.

In order to address this problem, a streaming method and Transmission Protocol for real time data transmission were developed. The streaming method is a technique that receives transmission in small increments without downloading the entire file in order to reduce the playback lag time, but it became necessary to have a protocol that can send real time transmission even with some data loss for regular transmission. Hence, RTSP (Real Time streaming Protocol) that sets up and controls connection between the server

DISH EXHIBIT 2002, Page 1092
Aylo Freesites Ltd. v. Dish Technologies L.L.C.
IPR2024-00047

and the client and adds a function of transmitting multimedia data with real time characteristics to HTTP's basic functions was standardized.

Accordingly, the user, when intending to obtain multimedia data over the web, first connects to the web server to receive information about the media, and then connects to the RTSP server to receive the Streaming Service of the media.

At first, in order to perform streaming, one needs to encode media files such as AVI (*.avi), and MPEG (*.mpeg, *.mp3) files in streaming file format. To execute streaming files over the web through the user's PC, programs such as Real Player of Real Network and Windows Media Player of Microsoft must be installed first. Real Media uses RM (*.rm) and meta file RAM (*ram) as the streaming file format while Windows Media uses WMA (*.wma) and WMV (*.wmv) and meta files, ASF (*.asf) and ASX (*.asx), etc.

However, in a mobile environment, the third generation standard 3GPP (the 3rd Generation Partnership Project) (*.3gp) and 3GPP2 (the 3rd Generation Partnership Project 2) (*.3g2) for speedy mobile data transmission in the Cellular Networks are each adopted in the transmission network respectively, and a similar standard to this was established.

FIG. 1 roughly illustrates overall streaming architecture.

Original media data that are provided or manufactured by Contents Providers (CP) are converted to 3GPP and 3GPP2 formats by the encoder; these converted media files are stored in the Streaming Server; and the Streaming Server streams media files through the transmission network to the Portable Terminal.

In general, the process in FIG. 2 demonstrates the streaming process more specifically.

For example, in order to send streaming to a Portable Terminal from the viewpoint of 3GPP in a mobile environment, first, convert the abc.avi file that can be played in Window Media Player for PC using an encoder to abc.3gp with appropriate bit rate, size, codec, and file format and compress media clips during this conversion process so that the original media data that

DISH EXHIBIT 2002, Page 1093
Aylo Freesites Ltd. v. Dish Technologies L.L.C.
IPR2024-00047

require a large storage space can be easily transmitted through transmission channels such as low bit rate modem connection (S11).

Next, store converted files in media folder of the Streaming Server, for example, in the format of "C:\streaming\media\abc.3gp" (S12), generate links to applicable medias such as "rtsp://streaming.nextreaming.com/abc.3gp" (S13) so that the terminal gets connected to the Streaming Server to receive the Streaming Service, and put the applicable links on the Internet page of the website (Portal) (S14).

When the user of the Portable Terminal selects the above-referenced streaming link by visiting said website in the above using the terminal (S15), the terminal gets connected to the Streaming Server and starts the Streaming Service for abc.3gp file (S16).

But problems occur when streaming multiple contents of 2 or more, which is not the case when streaming 1 media content as described in the above.

FIG. 3 illustrates a method of streaming multiple media contents in general PC environments.

Let's assume a case where 3 streaming files (File1.3gp, File2.3gp, and File3.3gp) are streamed through a media player. First, you request a session for File1.3gp to play media of file1, but in order to play media of the file2, you need to sever the connection to File1.3gp session, and try to obtain connection to the File2.3gp file. In the same manner, in order to open the media file of file3, you need to discontinue the File2.3gp session and then try connecting to the File3.3gp file.

This problem of repetitive closing and opening does not seem to be pointed out as a huge problem in the PC environment. It doesn't take long to open and close a session; not only is it easy to implement an application that automatically resolves such issue but updates for such automatic solution can be easily done.

However, if you look at the case of FIG. 3 in a mobile environment, there is a problem where a handset player cannot automatically initialize a

DISH EXHIBIT 2002, Page 1094
Aylo Freesites Ltd. v. Dish Technologies L.L.C.
IPR2024-00047

session. In most cases, a terminal is set up so that once the streaming of 1 file is complete, another request for content needs to be made once again and furthermore, it is not easy to repeat Step S15 every time. This is also illustrated in FIG. 4.

FIG. 5 illustrates an example of Pseudo Broadcast.

In the example of Pseudo Broadcast illustrated in FIG. 5, continuous streaming takes place into multiple terminals through Pseudo Broadcaster, and it looks as if multiple files of File1.3gp, File2.3gp, and File3.3gp are being streamed all at once. But in fact, each file not only has time continuity but there is also limitation for each terminal to see the same content at the same time.

In other words, even in the case of Pseudo Broadcasting, it is not possible for a terminal user to freely receive streaming of multiple content files.

BRIEF SUMMARY OF THE INVENTION

The Inventor of the present invention, faced with problems of the existing art described in the above, set as one objective of the present invention, the provision of a streaming method that enables the user of a Portable Terminal to receive streaming of multiple contents all at once and a system for such a method.

Meanwhile, in order to achieve said objective, one is not to implement functions that achieve the objective within the terminal (it is not easy to build and inefficient since the specifications of each Portable Terminal maker are different). Rather, one should make it such a way that types and specifications of various terminals shall not pose restrictions by implementing the functions on the Streaming Server even though functions are not implemented on the terminal.

In addition, the present invention set, as another objective, the provision of various options that implement a business model by connecting advertisement methods or enable implementation of such conveniences as players used for PC in a Portable Terminal.

DISH EXHIBIT 2002, Page 1095
Aylo Freesites Ltd. v. Dish Technologies L.L.C.
IPR2024-00047

Other objectives and advantages of various embodiments of the present invention will be described below. We would like to add that the other objectives and strengths of the present invention will be accepted more widely not only by the matters described in the various embodiments and claims but also by the means and combinations that can be generated within the scope that can be easily considered, and it will correspond to the unique effect of an embodiment of the present invention.

An embodiment of the present invention, for the purpose of achieving such objectives, relates to a streaming method that enables streaming multiple content files all at once to a Portable Terminal without attempting to reconnect to each separate content, comprising:

The 1st Step wherein 2 or more content files are selected;

The 2nd Step wherein one Playlist file is generated for said content files via the Playlist Generator to prepare for Streaming Service;

And the 3rd Step wherein the above-referenced Playlist files are streamed to a Portable Terminal.

In addition, it is desirable to include another step—Step 4 wherein real time update is applied to the Playlist during streaming into the Portable Terminal.

It would be desirable for the said 1st Step of one embodiment of the present invention, wherein said content files are selected to be pre-established in Contents Provider (CP) or the web server.

And the 1st Step, wherein said content files are selected in other forms of embodiments, can progress in an Interactive Mode whereby the Portable Terminal user connects to the website and directly prepares the Playlist.

And as embodiments for the 4th Step, wherein said real time update is applied, in the event that the Portable Terminal user modifies, adds or deletes the Playlist that is being streamed through connection to the website, it would be advisable to perform an update in real time on the Playlist with the modified, added or deleted content list.

DISH EXHIBIT 2002, Page 1096
Aylo Freesites Ltd. v. Dish Technologies L.L.C.
IPR2024-00047

And it would be desirable for the 2nd Step wherein said Streaming Service is being prepared to include:

A step wherein Validation Check is performed on content files that are selected during Step 1 by Playlist Generator;

A step wherein the Playlist is prepared;

A step wherein Playlist files are stored in a specific media folder of the Streaming Server;

And a step wherein a streaming link for said specific media folder is generated on the Internet page of the website.

Meanwhile, regarding the step where said Validation Check is performed, it can be understood as checking validity of each file's codec and encoding parameters for each codec in order to check if each file can be streamed as one file without any stoppage through the Streaming Server. Individual Validation Check can be performed for each file, or as an alternative method, the Validation Check can be performed on all the files at once.

It would be desirable for said Playlist files of one embodiment of the present invention to include sequence number, location information and option information for each file.

And it would be desirable for the 3rd Step wherein files of the Playlist are being streamed to include the following:

A step wherein a streaming link is selected for the Playlist files by connecting to the Internet page of the website using the browser of the Portable Terminal;

A step wherein the Streaming Server streams above-referenced Playlist files as 1 file to the Portable Terminal without attempts to reconnect once the streaming link is selected.

In addition, said streaming link can be configured in such a manner that the Streaming Server includes another step that performs authentication in terms of the number of times or (and) specific time.

DISH EXHIBIT 2002, Page 1097
Aylo Freesites Ltd. v. Dish Technologies L.L.C.
IPR2024-00047

On the other hand, it is a good example of the embodiments of the present invention as a business model that said content files of one embodiment of the present invention include advertisement content files;

That the advertisement content files are combined with other content files and one Playlist file is generated through said Playlist Generator, and that advertisement content files and other content files are being streamed sequentially as one Playlist file to a Portable Terminal.

It would be desirable for the Playlist Generator that generates one Playlist during said Step 2 of one embodiment of the present invention, to be configured in a manner that sets up Random Access function which allows Random Access to content files of 1 or more contained in the Playlist.

For instance, it would be good to set up a prohibited area that prohibits Random Access in 1 or more pre-determined specific content files.

It would be desirable for the Playlist Generator that generates one Playlist during Step 2 of one embodiment of the present invention, to be configured in a manner that enables establishing of Track Move function which allows Track Move for 1 or more content file contained in the Playlist, or a prohibited area where Track Move is prohibited.

And, if said Playlist is audio, it would be considered a highly desirable execution format to display the information of the audio file on the liquid crystal of the Portable Terminal by generating video files that contain information about applicable audio files in advance and streaming corresponding video files while streaming the audio files.

The unique system of one embodiment of the present invention that makes it possible to implement the method of one embodiment of the present invention described so far relates to a streaming system that allows streaming multiple content files all at once without making attempts to reconnect for each content and has the following features;

Above-referenced content files are converted to streaming files by an encoder and the Streaming Server transmits the streamed files to a Portable Terminal;

DISH EXHIBIT 2002, Page 1098
Aylo Freesites Ltd. v. Dish Technologies L.L.C.
IPR2024-00047

In the event that above-referenced content files of N or more (N is an integer greater than 1) are selected, the Playlist Generator generates one Playlist for content files C_1, C_2, ..., C_N (C refers to a content file, and its subscript is a random serial number, an integer greater than 1) targeted for streaming, puts information contained in each content file in the Playlist files and transmits them to a media folder of said Streaming Server and then links the media folder to an Internet website;

A Portable Terminal receives streaming of content files specified in said Playlist through a transmission network from said Streaming Service, after which it considers content files of N or more as one content file and completes the selection of a streaming link of said Internet website at one (1) time.

And the system of one embodiment of the present invention furthermore includes an Advertisement Server that provides advertisement contents;

Said Playlist Generator can combine advertisement contents that are provided by said Advertisement Server and stored in the Streaming Server with content files provided by said content server to generate Playlist files.

On the other hand, the Streaming Server includes Random Access Module and Track Move Module which allow Random Access to 2 or more content files and Track Move respectively, and it would be desirable to pre-establish Random Access Prohibition Area and (or) Track Move Prohibition Area depending on the types of said content files through the Playlist Generator.

And it is desirable for the system of one embodiment of the present invention to set an area where the bill payment processing is prohibited for certain contents with 1 or more content.

BRIEF DESCRIPTION OF THE SEVERAL VIEWS OF THE DRAWINGS

FIG. 1 is a drawing that shows overall streaming architecture.

FIG. 2 is a flow chart that illustrates an existing mobile streaming procedure.

DISH EXHIBIT 2002, Page 1099
Aylo Freesites Ltd. v. Dish Technologies L.L.C.
IPR2024-00047

FIG. 3 is a drawing that illustrates composition of the Playlist in general PC players.

FIG. 4 is a drawing that illustrates problems in case of streaming multiple content files in a mobile environment.

FIG. 5 is a drawing that illustrates an example of existing Pseudo Broadcasting.

FIG. 6 is a drawing that illustrates overall system configuration in accordance with one embodiment of the present invention.

FIG. 7 is a drawing that shows functions of an embodiment of a Playlist Generator.

FIG. 8 is a flow chart that illustrates a method of streaming in accordance with one embodiment of the present invention.

FIG. 9 is a drawing demonstrating a case where the server selected contents at Step S100 of FIG. 8.

FIG. 10 is a drawing demonstrating a case where the user selected contents at Step S100 of FIG. 8 using a portal site.

FIG. 11 is a flow chart that illustrates detailed processes at Step S200 of FIG. 8 (In this drawing, Steps S210 and S220 can be performed at Step S100 of FIG. 8).

FIG. 12 is a flow chart that illustrates detailed processes of Step S300 of FIG. 8.

FIG. 13 is a drawing that illustrates an overall process of one embodiment of the present invention.

FIG. 14 is a drawing that illustrates an embodiment wherein advertisement contents are included in the Playlist.

FIG. 15 is a drawing that illustrates an example of billing strategy in the case of FIG. 14.

FIG. 16 is a drawing that shows functions of Random Access Module.

DISH EXHIBIT 2002, Page 1100
Aylo Freesites Ltd. v. Dish Technologies L.L.C.
IPR2024-00047

FIG. 17 is a drawing that shows setting of areas where Random Access to certain contents (for example, advertisement contents) is prohibited in the above-referenced case of FIG. 16.

FIG. 18 is a drawing that shows functions of Track Mobile Module.

FIG. 19 is a drawing that shows the setting of areas where Track Movement for certain contents (for example, advertisement contents) is prohibited in the above-referenced case of Fig. 18.

<We'd like to clarify that the above-referenced drawings are drawings for reference to an embodiment and as such are not to be considered as limiting.>

DETAILED DESCRIPTION

We shall describe below in detail one or more embodiments in accordance with the present invention by making reference to attached drawings. In describing one embodiment of the present invention, in case any matter, such as a publicly disclosed function or construction that is obviously clear to whoever is familiar with this field, is mentioned, a detailed description of the matter shall be omitted.

In the following description, numerous specific details are given to provide a thorough understanding of embodiments. One skilled in the relevant art will recognize, however, that the invention can be practiced without one or more of the specific details, or with other methods, components, materials, etc. In other instances, well-known structures, materials, or operations are not shown or described in detail to avoid obscuring aspects of the invention.

Reference throughout this specification to "one embodiment" or "an embodiment" means that a particular feature, structure, or characteristic described in connection with the embodiment is included in at least one embodiment. Thus, the appearances of the phrases "in one embodiment" or "in an embodiment" in various places throughout this specification are not necessarily all referring to the same embodiment. Furthermore, the particular

DISH EXHIBIT 2002, Page 1101
Aylo Freesites Ltd. v. Dish Technologies L.L.C.
IPR2024-00047

features, structures, or characteristics may be combined in any suitable manner in one or more embodiments.

FIG. 6 concisely illustrates the system configuration of one embodiment of the present invention.

Encoder (2) converts original media data (1) of contents into streaming files and stores them in the Streaming Server (4). Playlist Generator (3) generates one (1) Playlist once checking codec type of each file is done, and then stores the Playlist in the Streaming Server (4) in preparation for streaming multiple contents all at once. Such preparation becomes complete as connection takes place through the wireless portal (6) that provides mobile pages that can be linked to the Streaming Server (4) and the wireless data network (10). On the other hand, the user of the Portable Terminal (8) selects a streaming link by connecting to the wireless portal (6), and streaming into the Portable Terminal (8) takes place through the wireless data network (for example, CDMA 2000 1x, EV-DO, GPRS, EDGE, etc.). The user of the Portable Terminal (8), before selecting the streaming link or while receiving the Streaming Service, can add or delete the Playlist in Interactive Mode by accessing the web server (7) that is connected to the Mobile Portal (6) through Internet (5) in the user's PC (12).

Meanwhile, conditions of the encoding profile that are used in order to put multiple content files (1) (11) into one Playlist are shown in the following table.

Type of codec contained in each content file are the same.	
MPEG-4 Visual	Decoder Specific Info. (Frame Size, Profile–level–id), Timescale, H, 263, Frame Size, Profile, Level, Timescale etc. are identical.
H.264	PPS/SPS (Frame Size), Profile–level–id etc. are identical.
AAC-LC	Decoder Specific Info. (Sampling rate, Bit per sample, Channel Number) etc. are identical.

DISH EXHIBIT 2002, Page 1102
Aylo Freesites Ltd. v. Dish Technologies L.L.C.
IPR2024-00047

AMR, QCELP, EVRC	Sampling rate, Bit per sample, Channel Number, etc. are identical.

And FIG. 7 shows the function of said Playlist Generator (3). According to FIG. 7, each separate content file (File1.3gp, File2.3gp, and File3.3gp) is placed in one Playlist through said Playlist Generator (3) and then these Playlist files are transmitted to the Portable Terminal (8) as one streaming file (Files.3gp), after which the Portable Terminal (8) recognizes this as one file and receives streaming as such.

The system of one embodiment of the present invention includes the Playlist Generator in the Streaming Server (4) and FIG. 8 roughly illustrates the streaming method of one embodiment of the present invention utilizing the Playlist Generator.

To begin with, multiple content files will be selected (S100).

The selection of content files is either pre-determined in the web server of the Internet website (Portal) that provides contents or in the content server that provides contents to Internet websites, or pre-selected among the list of contents files that are placed on the website server as the user of the Portable Terminal connects to the website or in Interactive Mode. At this time, types and sequence of files shall be considered as well.

Next, it leads to a step where one Playlist file is generated for content files that are selected through the Playlist Generator in preparation for the Streaming Service (S200). For example, if we assume a scenario where the server selects File1.3gp and File 5.3gp; File1.3gp, File2.3gp, and File4.3gp; File2.3gp, File3.3gp and File5.3gp; File5.3gp, File3.3gp and File1.3gp from individual content files of File1.3gp, File2.3gp, File3.3gp,

File4.3gp, and File5.3gp, Playlist Generator generates one Playlist file respectively from each selected group of files which are File1 and File5; File1, File2 and File4; File2, File3 and File5; and File5, File3 and File1. This individual group of Playlist files shall be recognized as one content and

DISH EXHIBIT 2002, Page 1103
Aylo Freesites Ltd. v. Dish Technologies L.L.C.
IPR2024-00047

streamed as such. This step is illustrated in FIG. 7 and FIG. 9 that are already described above.

FIG. 10 illustrates a case where multiple contents are pre-selected by the user of the Portable Terminal using a portal site. If the user of the Portable Terminal selects, for example, File1.3gp, File2.3gp and File3.3gp, among multiple files that are linked, after connecting to the portal site using the Internet, the three files shall be designated as one Playlist and streamed as if they were one streaming file.

More specific processes of said Step S200 are illustrated in FIG. 11. Of these processes, Steps S210 and S220 were added for the sake of convenient explanation, and can be regarded as having already been carried out in the above Step S100.

To begin with, convert content files using an encoder into a streaming file format with appropriate bit rate and size and codec, etc. (S210). For instance, File1.avi, File2.wmv, and File3.asf are converted into File1.3gp, File2.3gp, and File3.3gp respectively. Next, streaming files are stored in the respective folder of the Streaming Server (S220). For instance, said converted files are designated as "C:\tempmedia\File1.3gp", "C:\tempmedia\File2.3gp", and "C:\tempmedia\File3.3gp", and stored in the folder of the Streaming Server.

Above-referenced Steps S210 and S220 in this example of implementation do not need to be carried out from the beginning each time in order to perform Step S230 shown below and shall be understood as steps that were already performed in the past. It is because when the encoding process is inserted every time, the time taken to process the encoding becomes too long, which is not desirable for the system operation. In other words, Step S230 shown below shall be understood as being performed for files that are already encoded in the streaming format, and said Steps S210 and S220 should be regarded as having already been carried out in said Step S100 that selects 2 or more content files.

When content files are selected, Validation Check is performed on the selected files (S230).

DISH EXHIBIT 2002, Page 1104
Aylo Freesites Ltd. v. Dish Technologies L.L.C.
IPR2024-00047

In order to transmit multiple files continuously, files contained in the Playlist have the same codec, and the encoding parameter for each codec are similar. Hence, in case a Playlist is prepared, every time a file is added, one compares the applicable file to previous files to check if they have the same codec as well as encoding parameters within the allowed range and check the validity of the added files.

In other words, parameters for Validation Check for files are as follows.

1. The type of codec to be stored is identical for images and sounds.

2. When images are encoded in MPEC-4 Visual codec, the following parameters are identical:

Decoder Specific info. (Frame Size, profile–Level–id), Timescale, H.263, Frame Size, Profile, Level, Timescale

3. When images are encoded in H.264 codec, the following parameters are identical:

PPS/SPS (Frame Size)

Profile–Level–id

4. When voices are encoded in AAC codec, the following parameters are identical:

Decoder Specific info. (Sampling rate, bit per sample, Channel Number)

5. When voices are encoded in AMR, QCELP or EVRC codec, the following parameters are identical:

Sampling rate, Bit per sample, Channel Number

- 2 or more files that meet said parameters above can exist in one Playlist.

Although the above-referenced Validation Check is a check-up that is done every time a file is uploaded, there are special cases where it is necessary to perform overall Validation Check en masse on all files contained in the prepared Playlist. In such a case, by checking all files in the Playlist, you

DISH EXHIBIT 2002, Page 1105
Aylo Freesites Ltd. v. Dish Technologies L.L.C.
IPR2024-00047

check the validity of files to see if the Playlist can be used. For example, in the above Interactive mode, if the subscriber selects one Playlist of the content file list, it would be desirable to perform Validation Check on the entire file list at once.

As described in the above, after performing Validation Check, in order to tie File1, File2 and File3 as one streaming file, a Playlist such as File1File2File3playlist.3gp shall be prepared and generated (S240). The Playlist file contains information such as location for each file etc., within the file.

When the Playlist is generated, for instance, it can have the following formats.

File Extension: 3gp

File contents

Nextreamer playlist

[SequenceNumber] | [File Location] [Option]

[SequenceNumber] | [File Location] [Option]

[SequenceNumber] | [File Location] [Option]

...

For example, the following examples can be prepared.

Playlist.3gp

Nextreamer playlist

1|D:\Development\Media\file1.3gp|11

2|D:\Development\Media\file2.3gp|0

3|D:\Development\Media\file3.3gp|110

4|D:\Development\Media\file4.3gp|110

Playlist files can be composed of a header part that shows applicable files are Playlist files, and a part that shows sequence number and location of each file, and a part to which usage option about the applicable file can be added. The name of the extension of the Playlist shall be made identical with the name of the extension of regular content files in order to support existing standard terminals.

DISH EXHIBIT 2002, Page 1106
Aylo Freesites Ltd. v. Dish Technologies L.L.C.
IPR2024-00047

Through above-referenced options, various usage methods can be set up such as whether the Track Move function will be supported or prohibited and whether billing information will be stored or prohibited.

Next, the prepared Playlist file shall be stored in a specific media folder (S250). For example, it shall be stored as "C:\streaming\Media\Playlist\File1File2File3playlist.3gp" and uploaded onto the applicable link of the website as rtsp://streaming.nextreaming.com/File1File2File3playlist.3gp" to generate a streaming link (S260).

FIG. 12 illustrates more detailed processes of the above Step S300. The user of a Portable Terminal connects to the Internet page of the website through a wireless portal by using a browser (S310), and selects the streaming link linked to the Internet page, that is, "rtsp://streaming.nextreaming.com/File1File2File3playlist.3gp" (S320), so that the terminal connects to the Streaming Server, after which the Streaming Service commences accordingly (S330).

At this time, the Streaming Server automatically streams File1.3gp, File2.3gp, File3.3gp successively, and the terminal decompresses codec compression and play back the clips. Since the terminal recognizes the above-referenced files as one streaming file, it becomes impossible to tell if multiple files are streamed or a single file is streamed. Hence, this embodiment resolves a problem of having to connect to the web server several times in order to receive the streaming of all the content files.

FIG. 13 roughly illustrates, once again, the entire processes of FIG. 8, FIG. 11, and FIG. 12. The streaming that takes place in the order of File1.3gp, File2.3gp, File3.3gp removes the inconvenience of restarting a session since a session request for the Playlist stops after one time and the Portable Terminal recognizes all the files as one file. The Streaming Server automatically conducts streaming and only after streaming of all files contained in the Playlist is complete, does the session of the Playlist stop.

DISH EXHIBIT 2002, Page 1107
Aylo Freesites Ltd. v. Dish Technologies L.L.C.
IPR2024-00047

Meanwhile, it is also possible to apply real time update to the Playlist during the streaming into the Portable Terminal.

As already explained in the above, according to one embodiment of the present invention, it is possible for a service user to generate or modify the Playlist in Interactive Mode through a portal page and receive streaming of the user's Playlist in real time. In case of generating or modifying the Playlist, Validation Check mentioned in the above shall be performed.

In case a specific Playlist file is streamed, the Streaming Server reads the Playlist, every time the content is transitioned into the next content, and checks the location and option information before starting streaming. Therefore, if a specific content of the Playlist is being played, subsequent contents may be deleted from the list or other contents can be added during the play. In such a case, the Streaming Server can stream subsequent contents based on the modified Playlist.

The Streaming Server does not take into consideration change in a file that has already been played and takes the sequence number contained in the Playlist as the criteria for judging if a file that is already played has been modified. For instance, when there is the following Playlist,

```
# Nextreamer playlist
1|D:\Development\Media\file1.3gp|11
2|D:\Development\Media\file2.3gp|0
3|D:\Development\Media\file3.3gp|110
4|D:\Development\Media\file4.3gp|110
```

Assuming the Streaming Server is playing #2, if the contents are modified as follows during the play,

```
# Nextreamer playlist
1|D:\Development\Media\file1.3gp|11
2|D:\Development\Media\file2.3gp|0
3|D:\Development\Media\file5.3gp|10
4|D:\Development\Media\file6.3gp|110
5|D:\Development\Media\file7.3gp|110
```


DISH EXHIBIT 2002, Page 1108
Aylo Freesites Ltd. v. Dish Technologies L.L.C.
IPR2024-00047

afterwards, the Streaming Server streams file5.3gp. If the Playlist is modified as follows while #3 is being played,

Nextreamer playlist

1|D:\Development\Media\file2.3gp|0

2|D:\Development\Media\file5.3gp|10

3|D:\Development\Media\file6.3gp|110

4|D:\Development\Media\file7.3gp|110

the Streaming Server is not concerned about the modification of #1, 2, and 3 and streams the content of #4.

The process during which such real time update takes place can be understood in Interactive Mode wherein if the user of the Portable Terminal, in the middle of receiving streamed files, modifies, adds or deletes the content list of the Playlist which is being streamed after the user is connected to the website, and while the user is in the process of receiving streaming, events of modification, addition, and deletion occur; and the modified, added and deleted content list is streamed in accordance with such events.

And, even in the case where the content list of the Playlist, the target of real time update, is modified or added, said Validation Check procedure shall be performed separately on the newly updated content.

On the other hand, in the embodiment of FIG. 14, said content files include advertisement content files. In such a case, selection of the advertisement content shall be determined in the web server or the Streaming Server rather than by the selection of the terminal. Playlist Generator combines File1.3gp, File2.3gp, and File3.3gp that contain general contents with commercial.3gp that contains advertisement contents respectively to form CommercialFile1, CommercialFile2 and CommercialFile3 respectively. In the event that the Streaming Server streams such files by transmitting them to a Portable Terminal, in the case of CommercialFile1, Commercial.3gp is streamed first and then File1.3gp; in case of CommercialFile2, Commercial.3gp is streamed first and then File2.3gp; and in case of CommercialFile3, File3.3gp is automatically streamed after streaming of Commercial.3gp is all complete. In

DISH EXHIBIT 2002, Page 1109
Aylo Freesites Ltd. v. Dish Technologies L.L.C.
IPR2024-00047

other words, in the above embodiment, advertisement effects of the advertiser can be maximized by making streaming of advertisement contents mandatory in order to receive streaming of any one of File1, File2, and File 3. In such a case, it would be desirable to process bill payment only when general content files are being streamed as shown in FIG. 15, and in case of advertisement contents, it is advised that the streaming time should be excluded from the total billing, because they are not selected by the user of the terminal.

Of course, advertisement DB and a server for bill processing for such an embodiment shall be provided on the system level.

As shown in the above, in terms of specific contents within the Playlist, a portion corresponding to applicable contents can be omitted when data for billing is stored depending on the intention of the service provider. Data for billing can include, for instance, the number of packets transmitted, names of content files for billing, or playback time of a played file.

We believe that the idea of one embodiment of the present invention should not be limited to the Playlist Generator combining and streaming multiple streaming files as one Playlist but it should also create a streaming solution that is more suitable to the user's usage. Multiple streaming files for each separate content exists within one Playlist and since they are streamed as if they were one file, the user's terminal does not recognize them as multiple streaming files but as one single streaming file. However, since Playlist files are distinguished as separate multiple streaming files in reality, there is a necessity for a module that enables the user of a Portable Terminal to have access to an individual streaming file.

To this end, as shown in FIG. 16, above-referenced Playlist Generator is configured with Random Access Module that enables random access to contents files (File1.3gp, File2.3gp, and File3.3gp) contained in the Playlist. Hence, for instance, while playing back the content of File1.3gp, the user can access File3.3gp (Fast Forward), or while playing back content of File3.3gp, you can access in reverse (Rewind) and play back the content of File2.3gp.

DISH EXHIBIT 2002, Page 1110
Aylo Freesites Ltd. v. Dish Technologies L.L.C.
IPR2024-00047

On the other hand, specific contents can be set aside in an area where random access is prohibited. For example, in case the function of Random Access Module is applied to the embodiment of FIG. 13, since it is desirable to set advertisement contents to be force streamed into the user's Portable Terminal, it is recommended that random access to advertisement contents be prohibited. As such, when storing and managing the Playlist, it can be set up in a way that multiple tracks to which random access is banned are added to random positions. The Streaming Server prohibits the user from using the function of Track Move when encountering a track prohibited for random access while streaming the contents in the Playlist one by one. This is identical to the Track Move Module mentioned below.

In other words, as illustrated in FIG. 17, the system shall be set up in a way that prohibits random access to Commercial contents and makes sure to stream the commercial contents without fail. We shall add that of course, such prohibited areas are not limited to advertisement contents and can be pre-determined in various ways; said Random Access module is modulized with software within said Streaming Server and use of applicable options can be set up in Playlist Generator, which is also applied to the Track Move module below.

In addition, FIG. 18 illustrates an embodiment wherein the Track Move function is set up in said Playlist Generator. This function works in a way that while streaming File1.3gp content, the Playlist jumps forward to stream File2.3gp or while streaming File3.3gp, it jumps backwards to stream File1.3gp by allowing Track Move for 2 or more content files contained in the Playlist. In short, when the Playlist jumps forward while streaming File2.3gp, it should move to the starting point for File1.3gp of the previous step, not the starting point where File2.3gp starts. If there is no file in the previous step, the Track Move function can be configured in a way that the Playlist can move to the starting point of File2.3gp that is being streamed.

For example, it allows Track Move for content files of 1 or more contained in the Playlist by recognizing Forward or Backward button selection implemented in the Streaming Player of the Portable Terminal as Move to the

DISH EXHIBIT 2002, Page 1111
Aylo Freesites Ltd. v. Dish Technologies L.L.C.
IPR2024-00047

Previous Track or Move to the Next Track. This is to technologically overcome situations where UI for Track Move does not exist in standard terminals, and this function is implemented in the Streaming Server in a way that when Move Forward or Move Backward button is selected in the terminal, this command is recognized as Move One Track Forward or Move One Track Backward. In other words, despite the fact that there is no UI for Track Move, it is possible to implement to use Forward and Backward buttons as UI for Track Move.

And in the case of the embodiment of FIG. 18, prohibited areas can be established for specific contents. Such an embodiment is illustrated in FIG. 19 and this corresponds to the case of FIG. 17. In other words, Commercial contents are configured in a way that they are streamed to the Portable Terminal, and while Commercial contents are being streamed, Track Move to the next content is prohibited.

And, in the event that said Playlist is Audio, one can display the information about the audio files in the liquid crystal display of the Portable Terminal by generating video files recorded with corresponding audio files in advance, and streaming the corresponding video files while the audio files are being streamed. In other words, if content files are Audio, each meta information is displayed as video, and audio is streamed to the Portable Terminal, in which case, it is necessary to manage the video separately. For example, you can store video files that contain information about each audio file in the Playlist, or let the Playlist decide the location of the video files; in case the Streaming Server performs streaming of applicable audio files, you can have corresponding video files streamed at the same time in order to display the information about the audio simultaneously through the screen of the Portable Terminal. To do this, the Streaming Server is able to open and stream both image and sound simultaneously for one streaming, and the Streaming Server repeats the playback by providing the standard for the playtime of a sound file regardless of the length of the image file or provides a function whereby streaming can be stopped halfway.

DISH EXHIBIT 2002, Page 1112
Aylo Freesites Ltd. v. Dish Technologies L.L.C.
IPR2024-00047

Meanwhile, in case of a standard mobile terminal, there is no way to receive the transmission of user authentication information through the standard streaming protocol. In such a case, the Streaming Server can protect the streaming link for the Playlist so that only the user can use it. The portal server receives a streaming link that is valid for a specific duration of time and a specific number of times from the Streaming Server before showing the Streaming Server to the user.

The user connects to the Streaming Server through the applicable streaming link while the Streaming Server checks the validity of the Playlist link and starts or denies streaming. Once the pre-defined specific number of times or specific time period passes, the corresponding Playlist link becomes no longer valid (Authentication of the Playlist).

In one embodiment, server side duration control is provided. That is, with some embodiments, playing duration is not able to be set in the playlist. The streaming server of these embodiments streams the entire duration of every content file in a playlist.

However, in other embodiments, playing duration can be set in the playlist file. If duration is set in a content file in the playlist, the streaming server will stream only the specified duration of a content file in a playlist and will skip the rest part. This concept is illustrated in FIG. 20.

For this change, the playlist format is changed to indicate the streaming duration of each content file as in the below example:

```
# XenonStreamer playlist
[SequenceNumber] | [File location] | [Option] | [Duration]
[SequenceNumber] | [File location] | [Option] | [Duration]
[SequenceNumber] | [File location] | [Option] | [Duration]
```

In this format, duration can be set as in the below example:

```
[Duration]: [start_time]-[end_time]
```


DISH EXHIBIT 2002, Page 1113
Aylo Freesites Ltd. v. Dish Technologies L.L.C.
IPR2024-00047

```
The unit of start_time and end_time is second.
If start_time is equal to zero, it can be omitted.
If end-time is omitted, it means 'the end of the content'.
If [Duration] is omitted, it means 'entire content'.
```

There are various uses for this duration control feature. For instance, the feature can be used to provide a preview in the streaming service: an existing piece of content can be used if a selected part can be streamed in the playlist. The example below shows how the first 30 seconds of a song can be streamed for preview purposes:

```
preview_song.3gp
# XenonStreamer playlist
1 | c:\media\song1.3gp | 1 | -30
```

The example below shows how 00:30-00:40 + 1:10-1:20 + 1:50-2:00 (total 30 seconds) can be streamed for preview:

```
preview_song.3gp
preview_video.3gp
# XenonStreamer playlist
1 | c:\media\video.3gp | 1 | 30-40
2 | c:\media\video.3gp | 1 | 70-80
3 | c:\media\video.3gp | 1 | 110-120
```

As another use of the duration control feature, if a content file is very long, its content can be divided into multiple links by specifying duration. The following example shows how a 7-minute content can be divided into two 2-minute content links and one 3-minute content link:

DISH EXHIBIT 2002, Page 1114
Aylo Freesites Ltd. v. Dish Technologies L.L.C.
IPR2024-00047

```
long_part1.3gp (2 mins)
# XenonStreamer playlist
1 | c:\media\long.3gp | 1 | 0-120

long_part2.3gp (2 mins)
# XenonStreamer playlist
1 | c:\media\long.3gp | 1 | 120-240

long_part3.3gp (the rest)
# XenonStreamer playlist
1 | c:\media\long.3gp | 1 | 240-
```

Yet another possible use of the duration control feature is to add an advertising clip in the middle of a content using playlist. The following example shows how an advertising content file is added after a one-minute playing of a content file, and the rest of the content file is played after the advertising content:

```
ad_inserted.3gp (the rest)
# XenonStreamer playlist
1 | c:\media\content.3gp | 1 | -60
2 | c:\media\ad.3gp | 1|
3 | c:\media\content.3gp | 1 | 60-
```

Another embodiment provides a live channel change feature. That is, in some embodiments, live streaming session cannot inserted. However, in other embodiments, multiple live streaming sessions can be inserted without duration information.

In this case, the track move function will works as "channel change" function. On request of this kind of playlist, the streaming server will stream the first live channel in a playlist. And if a random access request is

DISH EXHIBIT 2002, Page 1115
Aylo Freesites Ltd. v. Dish Technologies L.L.C.
IPR2024-00047

detected, the streaming server streams the previous or the next live channel in the playlist as it works for the "track move" function. This concept is illustrated in FIG. 21.

If the streaming server streams a live session, the random access buttons can be disabled in a handset player. To activate the random access buttons in the handset player, the streaming server can stream a live channel in a playlist as a very long file.

The example below shows a playlist for live channel change:

```
multi-channels.3gp
# XenonStreamer playlist
1 | rtsp://1.1.1.1/live_channel1.3gp
2 | rtsp://1.1.1.1/live_channel2.3gp
3 | rtsp://1.1.1.1/live_channel3.3gp
```

On request of this kind of playlist, the streaming server starts streaming live channel1 at first. And, if a user selects 'Fast forward', the streaming server will stream live channel2 in the same RTSP session.

The live channel change feature can increase users' satisfaction because of the improved speed and convenience. A user can also configure his/her own channel list.

Once again, we would like to add that those embodiments are mere examples of the present invention. The scope of protection of the present invention shall not be limited by these embodiments. Various technical standards are available for the methods and system of embodiments of the present invention and it is easy to substitute and change the technical means to provide yet other embodiments. In addition, the scope of protection of the present invention cannot be limited by such obvious change or substitution.

According to one embodiment of the invention that has been described so far, Playlist Generator generates one Playlist and streams it to a Portable Terminal so that the user of the Portable Terminal can receive multiple

DISH EXHIBIT 2002, Page 1116
Aylo Freesites Ltd. v. Dish Technologies L.L.C.
IPR2024-00047

contents all at once, thereby technologically promoting convenience of the user of a Portable Terminal. Through this, we can expect that supply and consumption of contents by the Portable Terminal will increase.

In addition, there is an advantage of increasing the effects of the advertisement that comes from generating the Playlist by combining various advertisement contents and general contents.

Moreover, special modules as options were added as embodiments to enable Random Access and Track Move, etc.

Furthermore, the effects of one embodiment of the present invention are not provided within the terminal but implemented on the Streaming Server, thereby optimizing the function of the Playlist files regardless of the specification and type of terminal. In another embodiment, components or other functionality may be provided within the terminal of the user.

We would like to add that the effect of one embodiment of the present invention will be accepted more widely not only by the matters described in the embodiment and claims, but also by the effect that can be generated within the scope that can be easily considered and the possibility of the advantages that contribute to the development of the industry.

The above description of illustrated embodiments, including what is described in the Abstract, is not intended to be exhaustive or to limit the invention to the precise forms disclosed. While specific embodiments and examples are described herein for illustrative purposes, various equivalent modifications are possible within the scope of the invention and can be made without deviating from the spirit and scope of the invention.

These and other modifications can be made to the invention in light of the above detailed description. The terms used in the following claims should not be construed to limit the invention to the specific embodiments disclosed in the specification and the claims. Rather, the scope of the invention is to be determined entirely by the following claims, which are to be construed in accordance with established doctrines of claim interpretation.

DISH EXHIBIT 2002, Page 1117
Aylo Freesites Ltd. v. Dish Technologies L.L.C.
IPR2024-00047

CLAIMS

What is claimed is:

1. A streaming method that can be implemented on a streaming server and that allows streaming of multiple content files at once without attempting to reconnect each content file to a portable terminal when multiple files are transmitted to the portable terminal from the streaming server, the method being for streaming of multiple files through a playlist file in a mobile environment, the method comprising:

a 1st step, wherein 2 or more content files are selected;

a 2nd step wherein one playlist file is generated for said content files via a playlist generator to prepare a streaming service; and

a 3rd step wherein said content files on the playlist file are streamed to the portable terminal as one file.

2. The method of claim 1 for streaming multiple files through a playlist file in a mobile environment, further comprising a 4th step wherein real time update is applied to the playlist file during streaming to the portable terminal.

3. The method of claim 1 wherein the 1st step wherein said content files are selected, relates to a method of streaming multiple files through the playlist file in a mobile environment that is already set up in a content provider (CP) or web server that provides content files.

4. The method of claim 1 wherein the 1st step wherein said content files are selected, pertains to a method of streaming multiple files through the playlist file in a mobile environment, which takes place in an

DISH EXHIBIT 2002, Page 1118
Aylo Freesites Ltd. v. Dish Technologies L.L.C.
IPR2024-00047

interactive mode where a user of the portable terminal selects at least one file among the content files after connecting to a website.

5. The method of claim 2 wherein the 4th step wherein said real time update is applied, pertains to a method of streaming multiple files through the playlist file in a mobile environment, wherein in an event that a user of the portable terminal, in a middle of receiving streamed files, modifies, adds or deletes a content list of the playlist file which is being streamed after the user connects to a website, the modified, added, and deleted content list is streamed.

6. The method of claim 1 wherein the 2nd step wherein said streaming service is prepared comprises:

a step wherein a validation check is performed on content files that are selected by the playlist generator;

a step wherein the playlist file is prepared;

a step wherein playlist files are stored in a specific media folder of the streaming server; and

a step wherein a streaming link for said specific media folder is generated on an Internet page of a website, all pertaining to a method of streaming multiple files through the playlist in a mobile environment.

7. The method of claim 6 wherein the step wherein said validation check is performed, pertains to a method of streaming multiple files through the playlist file in a mobile environment, wherein validating a codec of each file and encoding parameter of each codec is performed.

8. The method of claim 7 wherein the step wherein said validation check is performed, pertains to a method of streaming multiple files through the playlist file in a mobile environment, wherein a validation check on each file is performed individually or collectively.

DISH EXHIBIT 2002, Page 1119
Aylo Freesites Ltd. v. Dish Technologies L.L.C.
IPR2024-00047

9. The method of claim 6 wherein said playlist file pertains to a method of streaming multiple files through the playlist file in a mobile environment, wherein sequence number, location information, and option information are included.

10. The method of claim 1 wherein the 3rd Step wherein the Playlist is streamed includes:

a step wherein a streaming link is selected for the playlist file by connecting to an Internet page of a website using a browser of the portable terminal; and

a step wherein said playlist file is streamed as one file to the portable terminal without attempts of reconnection as a streaming link is selected, in a mobile environment.

11. The method of claim 10 for streaming multiple files through the playlist file in the mobile environment, further including another step wherein the streaming server provides authentication for said streaming link in terms of a specific number of times and/or specific duration of time.

12. The method of claim 1 wherein said content files include advertisement content files, wherein the advertisement content files are combined with other content files to generate said playlist file through said playlist generator, and wherein advertisement content files and other content files are streamed sequentially as one playlist file to the portable terminal, in a mobile environment.

13. The method of claim 1 wherein the playlist generator that generates one playlist in said 2nd Step, in a mobile environment, and can set up a random access function that allows random access to content files of 1 or more contained in the playlist file.

DISH EXHIBIT 2002, Page 1120
Aylo Freesites Ltd. v. Dish Technologies L.L.C.
IPR2024-00047

14. The method of claim 13, further comprising in the mobile environment, a step of setting up a prohibited area that bars random access in pre-determined, content files of 1 or more.

15. The method of claim 1 wherein the playlist generator that generates one playlist file in said 2nd step, pertains to a method of streaming multiple files through playlist in a mobile environment, wherein the playlist generator can set up a track move function that allows a track move for content files of 1 or more contained in the playlist file.

16. The method of claim 15 wherein the playlist generator sets up a prohibited area that prohibits track move in content files of 1 or more contained in the playlist file.

17. The method of claim 1 wherein information about audio files is displayed on a display screen of the portable terminal, in an event that said playlist file is audio, by generating video files recorded with information about the corresponding audio files in advance, the method further including streaming corresponding video files while streaming the audio files.

18. The method of claim 1, further comprising:

providing duration control feature; and

providing a live channel change feature.

19. A streaming system that streams multiple content files at once without attempting to reconnect for each individual content file, the system comprising:

an encoder that converts said content files to streaming files;

a streaming server that transmits the streaming files converted by said encoder to a portable terminal;

DISH EXHIBIT 2002, Page 1121
Aylo Freesites Ltd. v. Dish Technologies L.L.C.
IPR2024-00047

a playlist generator, in an event that said content files of N or more (N is an integer greater than 1) are selected, that generates one playlist file for content files C_1, C_2, ..., C_N (C refers to a content file, and its subscript is a random serial number, an integer greater than 1) targeted for streaming, and puts information contained in each content file in the playlist file, transmits the playlist file to a media folder of said streaming server and then links the media folder to an Internet website; and

a portable terminal that receives streaming of content files that are displayed in said playlist file through a transmission network from said streaming server, wherein content files of N or more are transmitted as one playlist file in a manner that completes selection of a streaming link of said Internet website after one time, thereby allowing streaming multiple files through the playlist file in a mobile environment.

20. The system of claim 19 to stream multiple files through the playlist file in a mobile environment, further comprising an additional advertisement server that provides advertisement content files, wherein said playlist generator combines advertisement content files that are provided from said advertisement server and stored in the streaming server with content files provided from a content server in order to generate the playlist file.

21. The system of claim 19 wherein said streaming server includes a random access module and track move module that allow random access and track move for content files of 1 or more contained in the playlist file respectively, the streaming server being adapted to pre-establish a random access prohibition area and/or a track move prohibition area through playlist file depending on types of said content files.

22. The system of claim 19 wherein the system prohibits bill payment processing for certain contents of 1 or more.

DISH EXHIBIT 2002, Page 1122
Aylo Freesites Ltd. v. Dish Technologies L.L.C.
IPR2024-00047

23. The system of claim 19 wherein the playlist generator further includes a duration control feature and a live channel change feature.

DISH EXHIBIT 2002, Page 1123
Aylo Freesites Ltd. v. Dish Technologies L.L.C.
IPR2024-00047

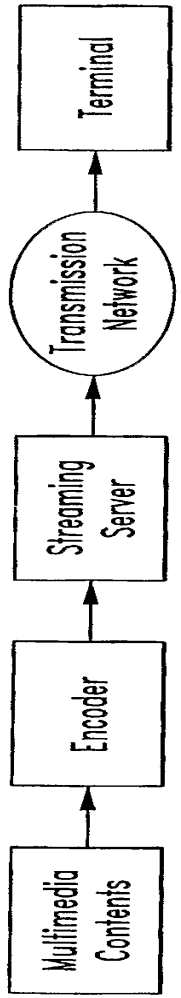

FIG. 1

DISH EXHIBIT 2002, Page 1124
Aylo Freesites Ltd. v. Dish Technologies L.L.C.
IPR2024-00047

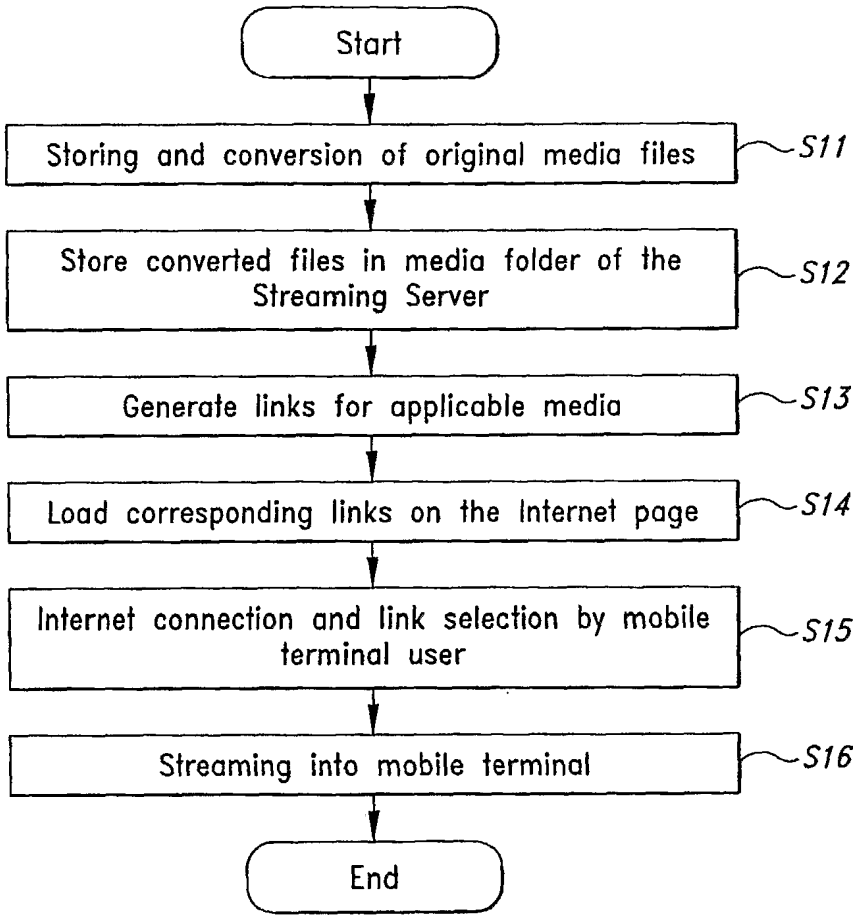

FIG. 2

DISH EXHIBIT 2002, Page 1125
Aylo Freesites Ltd. v. Dish Technologies L.L.C.
IPR2024-00047

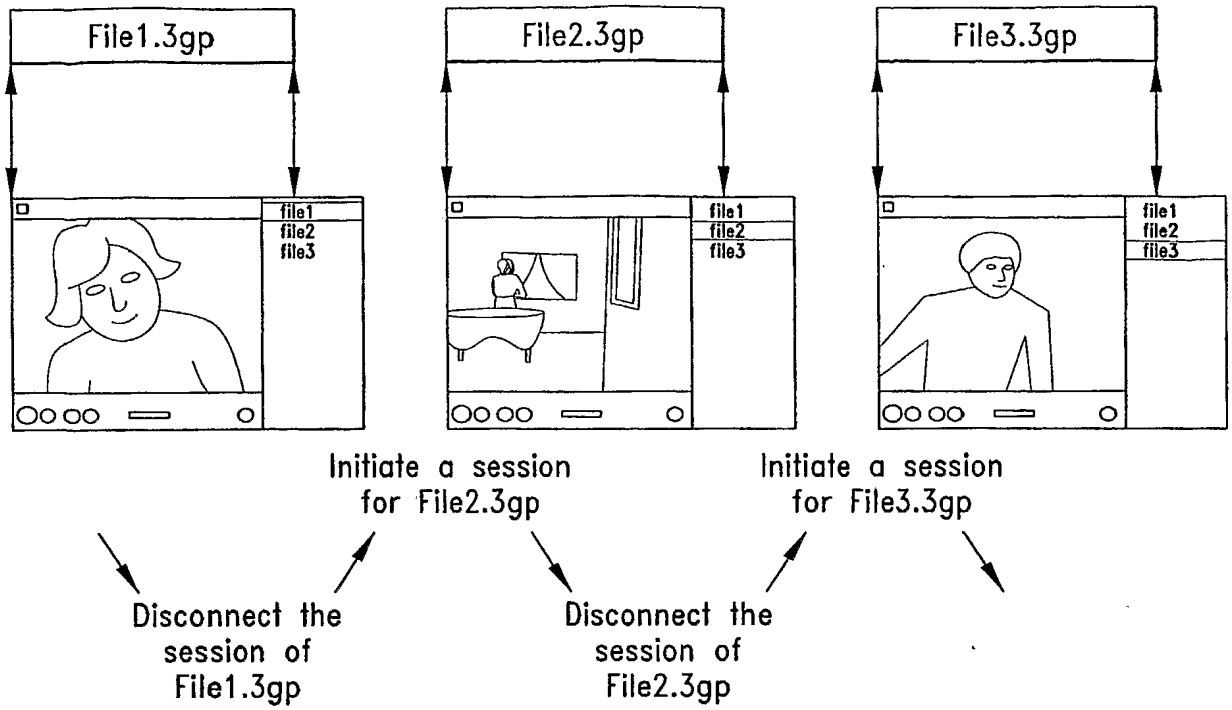

FIG. 3

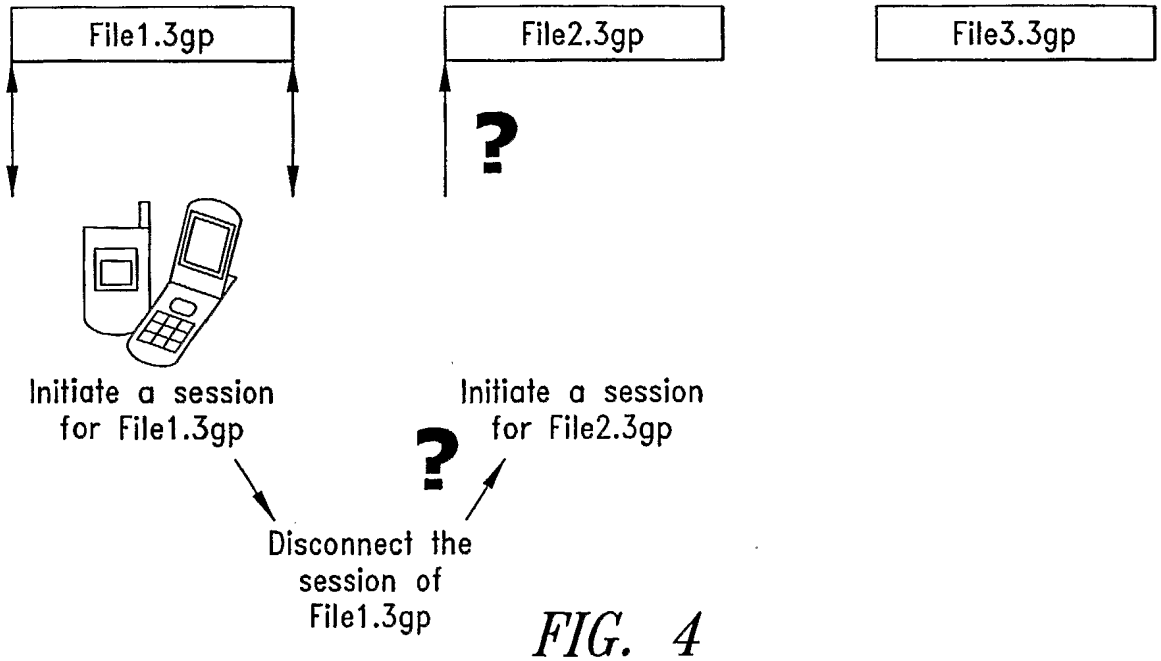

FIG. 4

DISH EXHIBIT 2002, Page 1126
Aylo Freesites Ltd. v. Dish Technologies L.L.C.
IPR2024-00047

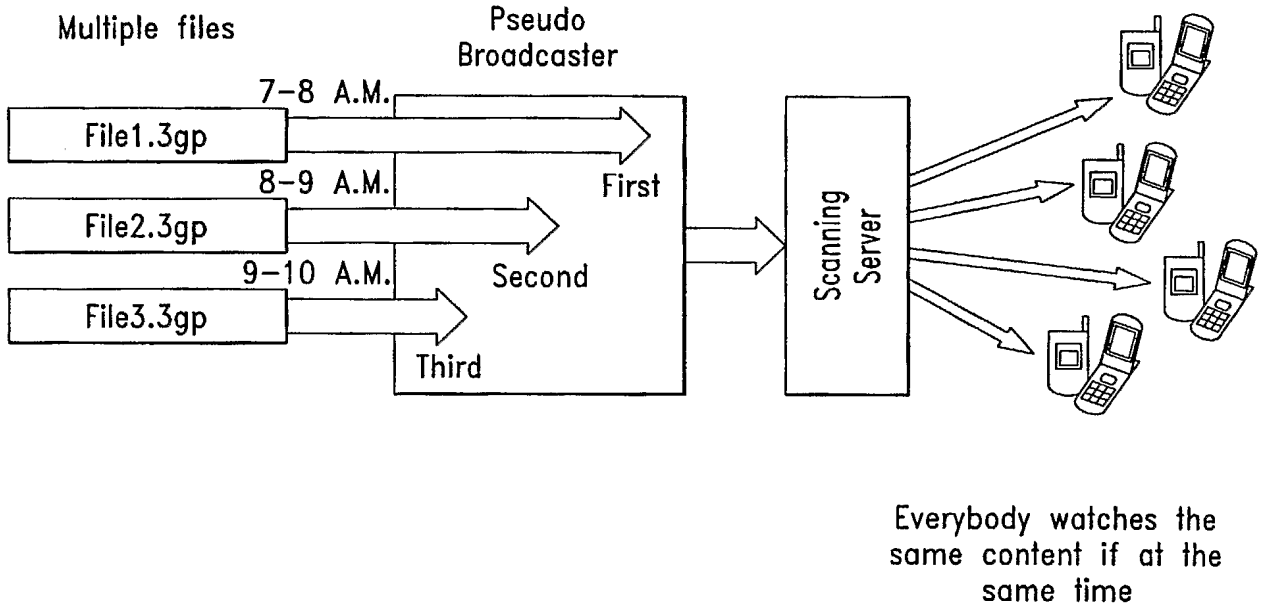

FIG. 5

DISH EXHIBIT 2002, Page 1127
Aylo Freesites Ltd. v. Dish Technologies L.L.C.
IPR2024-00047

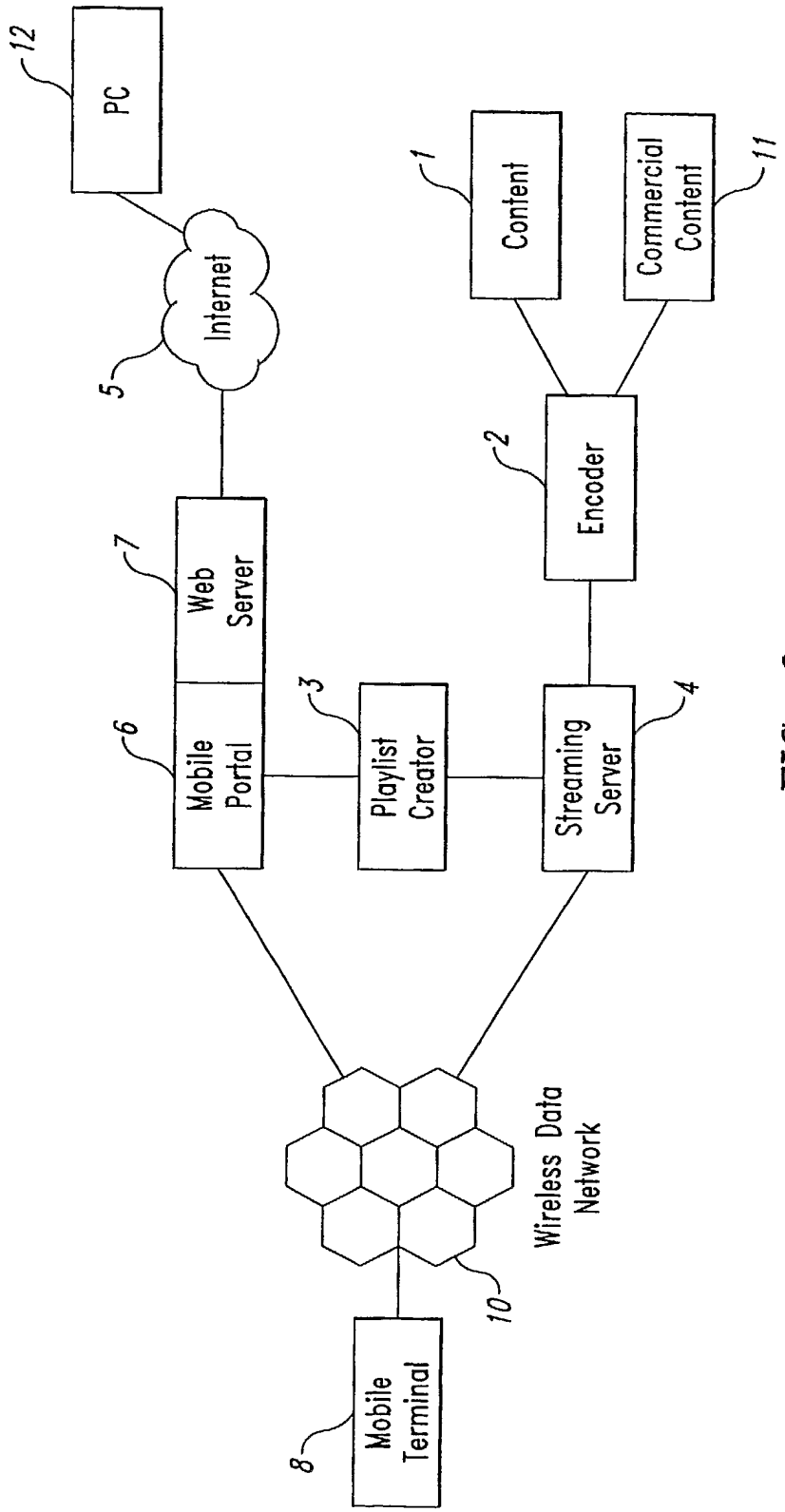

FIG. 6

DISH EXHIBIT 2002, Page 1128
Aylo Freesites Ltd. v. Dish Technologies L.L.C.
IPR2024-00047

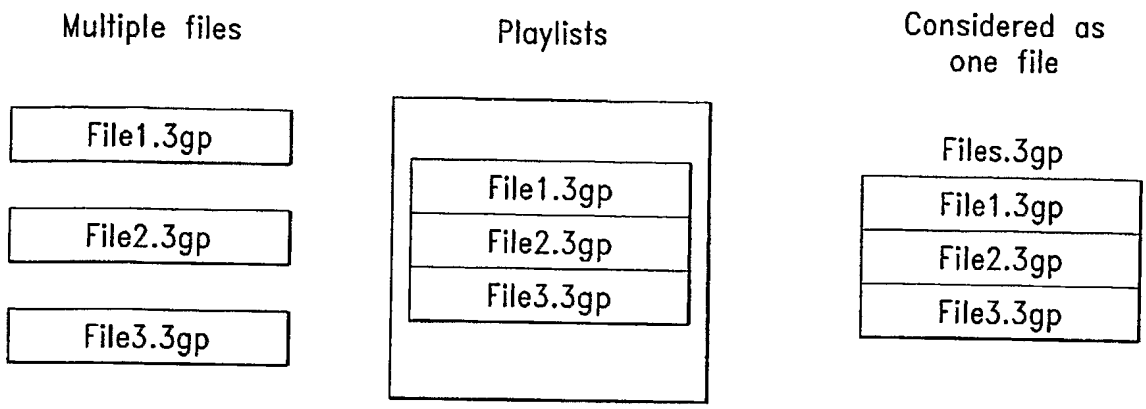

FIG. 7

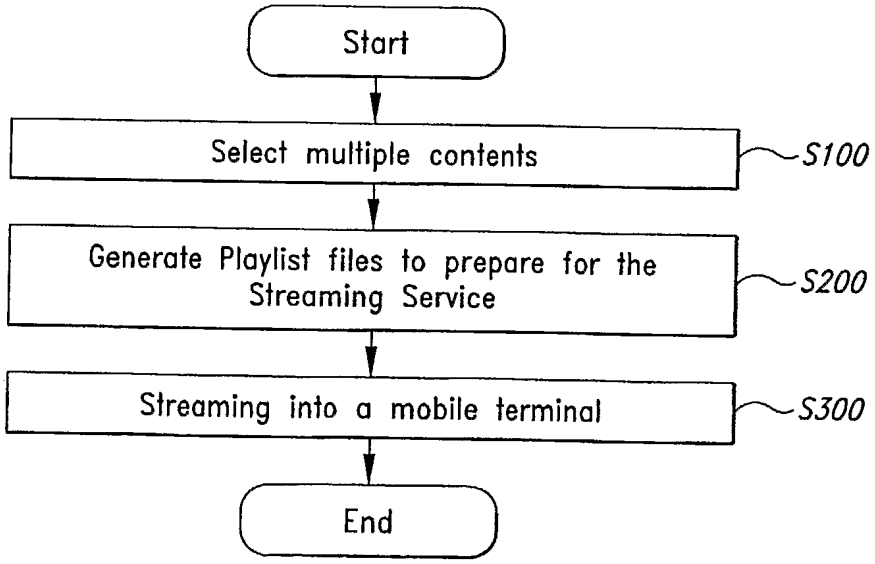

FIG. 8

DISH EXHIBIT 2002, Page 1129
Aylo Freesites Ltd. v. Dish Technologies L.L.C.
IPR2024-00047

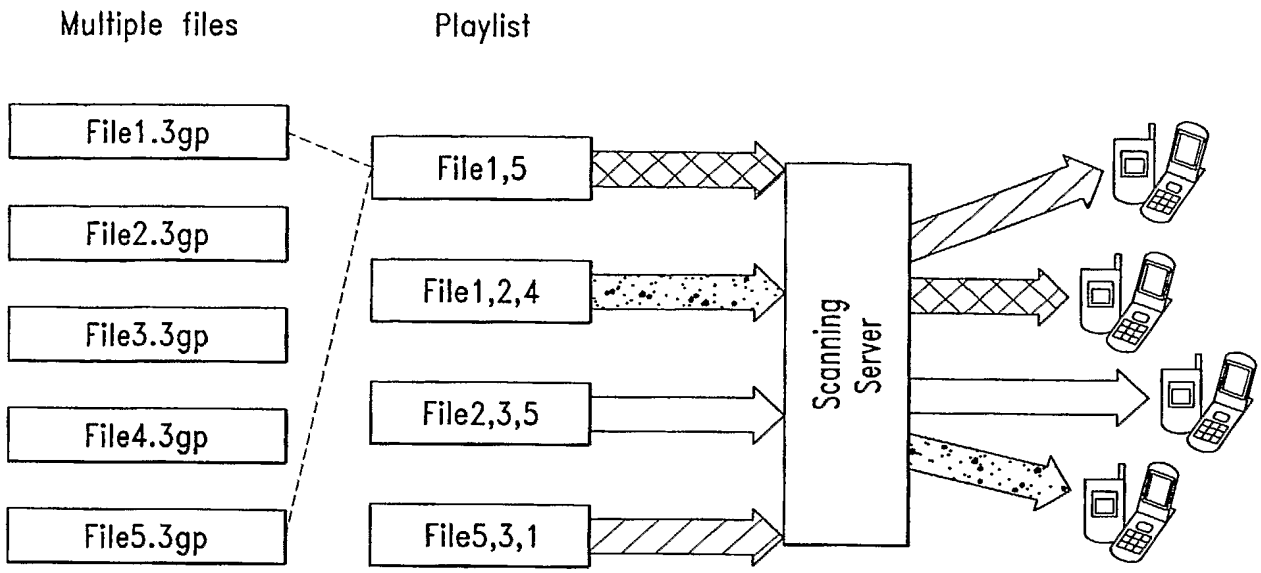

FIG. 9

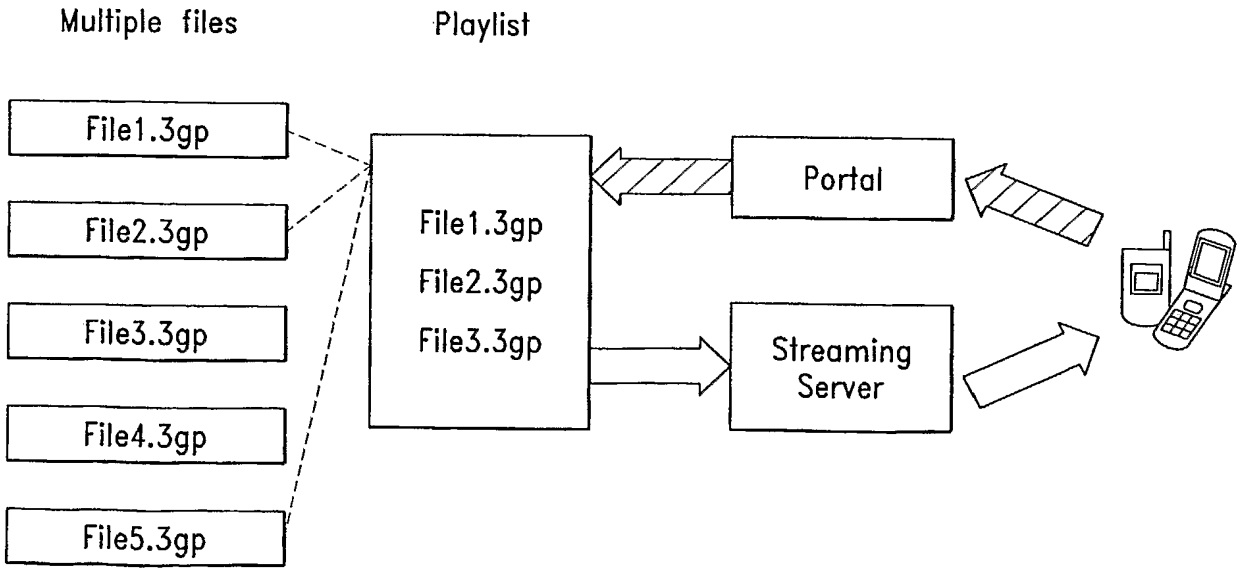

FIG. 10

DISH EXHIBIT 2002, Page 1130
Aylo Freesites Ltd. v. Dish Technologies L.L.C.
IPR2024-00047

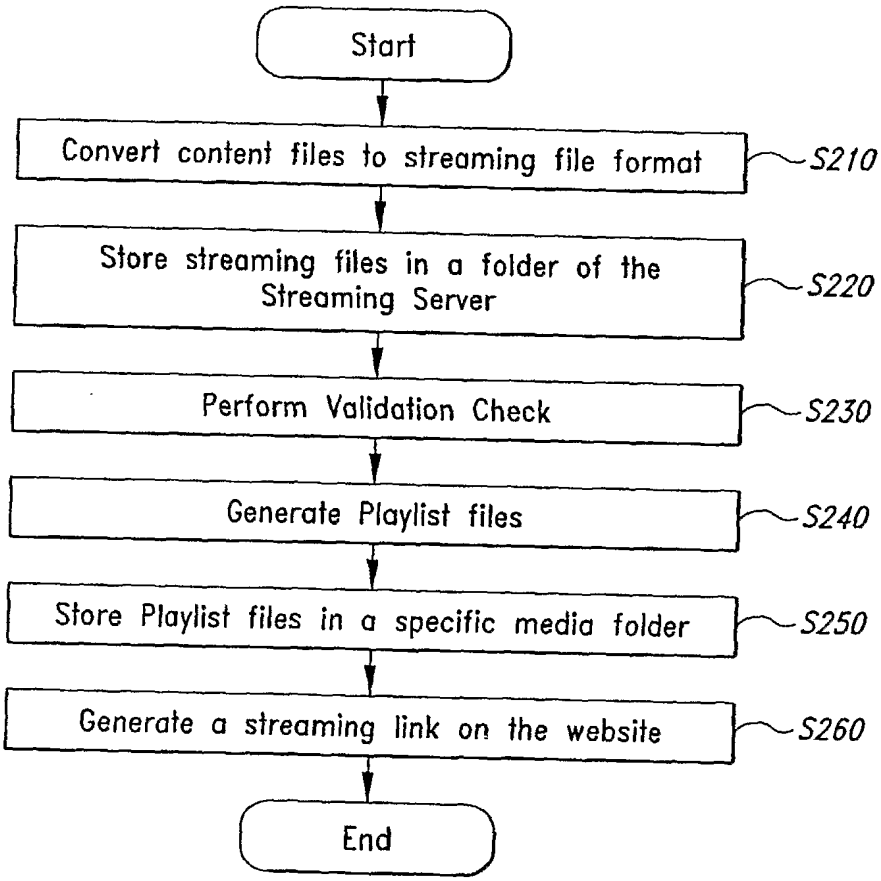

FIG. 11

DISH EXHIBIT 2002, Page 1131
Aylo Freesites Ltd. v. Dish Technologies L.L.C.
IPR2024-00047

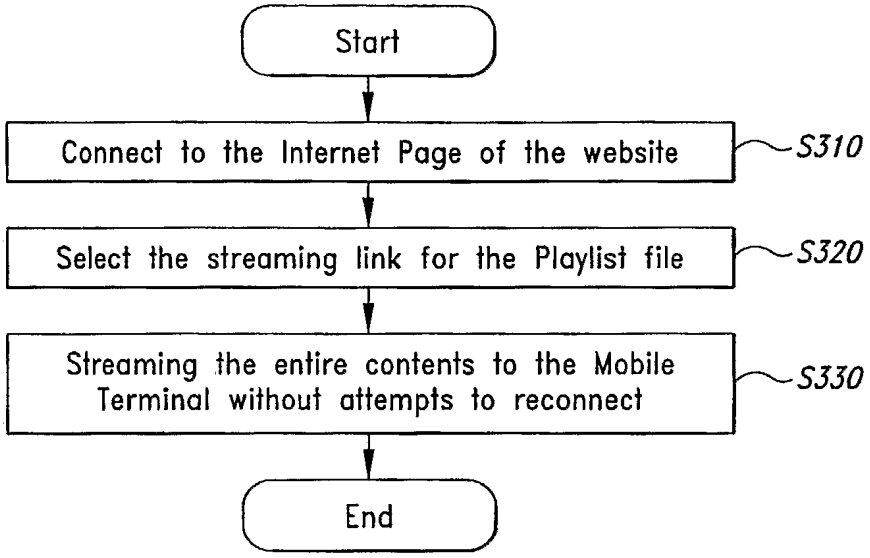

FIG. 12

DISH EXHIBIT 2002, Page 1132
Aylo Freesites Ltd. v. Dish Technologies L.L.C.
IPR2024-00047

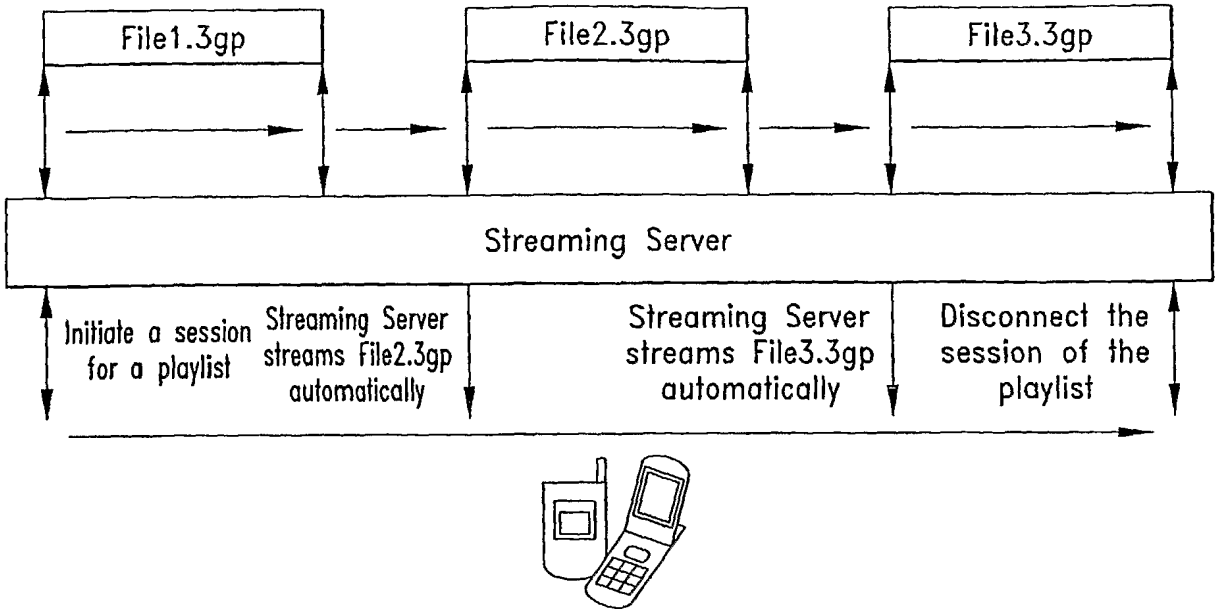

FIG. 13

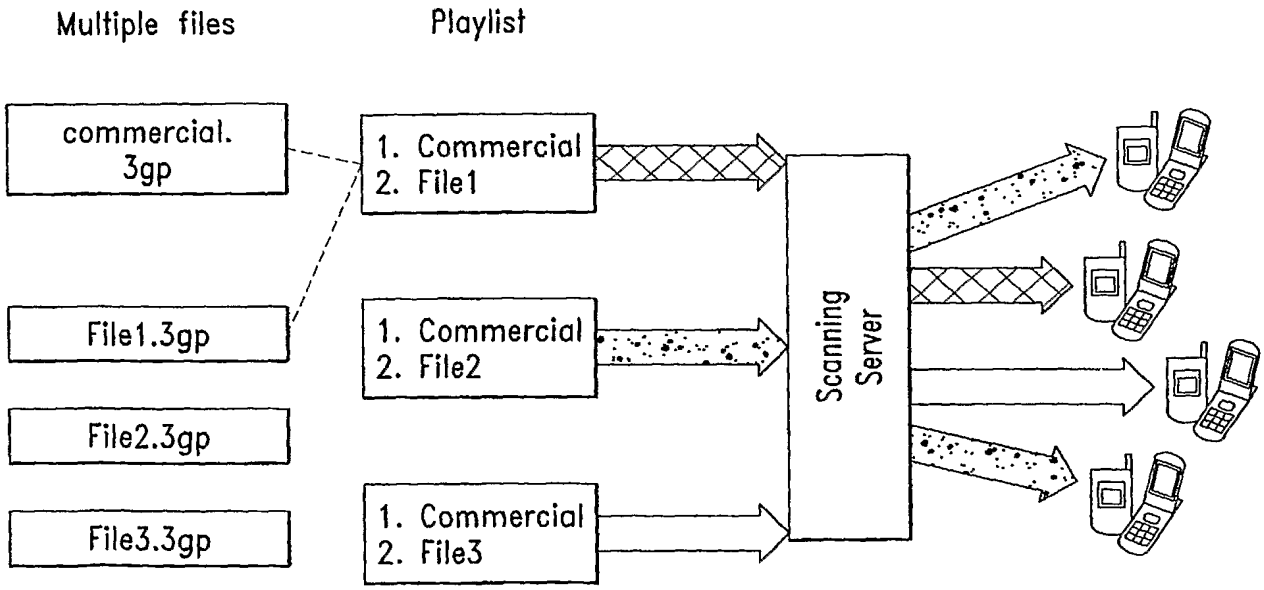

FIG. 14

DISH EXHIBIT 2002, Page 1133
Aylo Freesites Ltd. v. Dish Technologies L.L.C.
IPR2024-00047

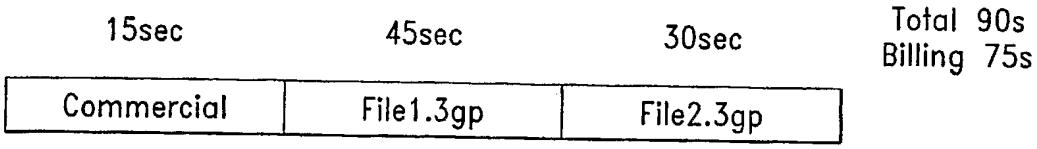

FIG. 15

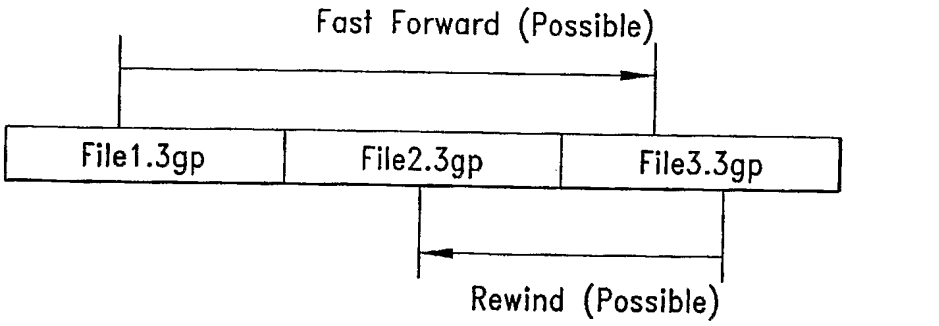

Random Access among multiple files is possible

FIG. 16

DISH EXHIBIT 2002, Page 1134
Aylo Freesites Ltd. v. Dish Technologies L.L.C.
IPR2024-00047

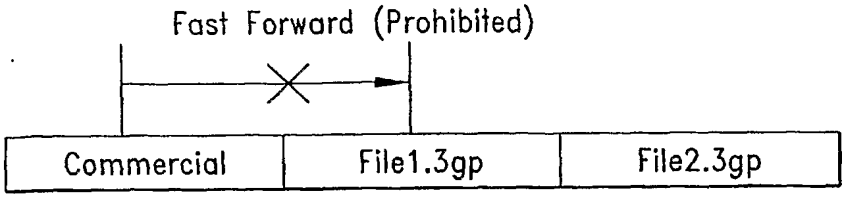

Or can be prohibited selectively as well
(Configurable in the playlist using the creation tool)

FIG. 17

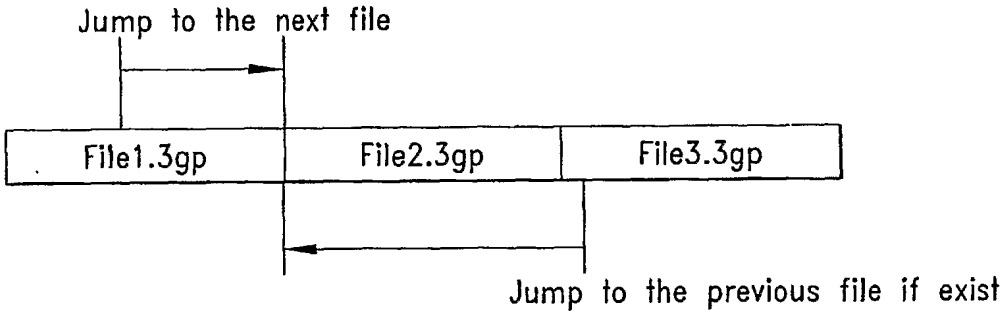

FF/REW buttons can be used for content selection

FIG. 18

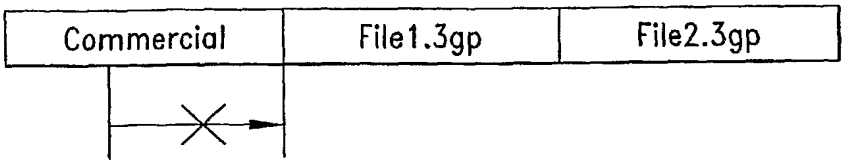

FIG. 19

DISH EXHIBIT 2002, Page 1135
Aylo Freesites Ltd. v. Dish Technologies L.L.C.
IPR2024-00047

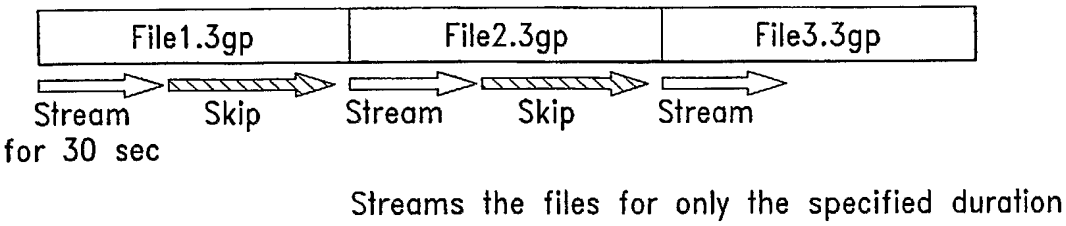

FIG. 20

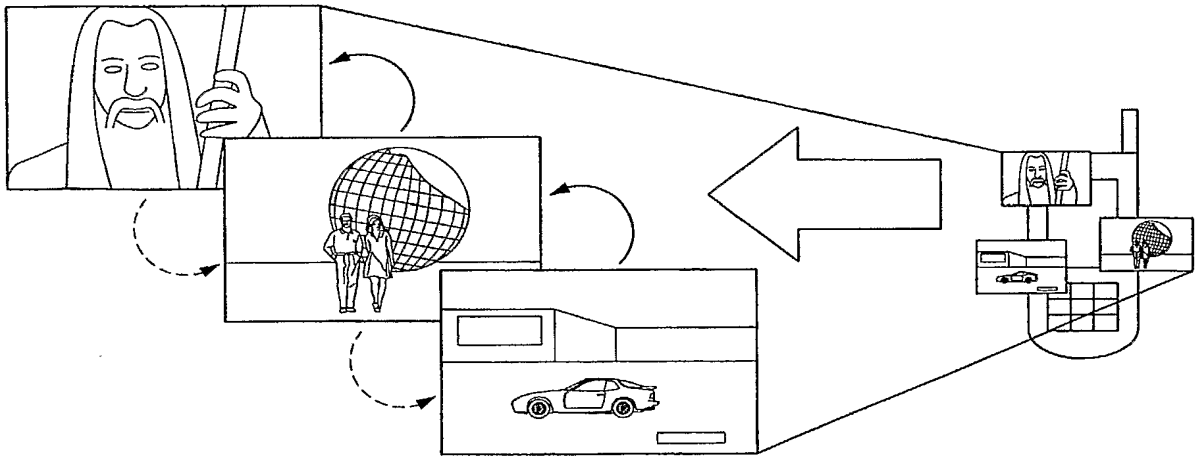

FIG. 21

DISH EXHIBIT 2002, Page 1136
Aylo Freesites Ltd. v. Dish Technologies L.L.C.
IPR2024-00047

INTERNATIONAL SEARCH REPORT

International application No
PCT/US2006/004896

A. CLASSIFICATION OF SUBJECT MATTER
INV. H04L29/06

According to International Patent Classification (IPC) or to both national classification and IPC

B. FIELDS SEARCHED

Minimum documentation searched (classification system followed by classification symbols)
H04L H04N

Documentation searched other than minimum documentation to the extent that such documents are included in the fields searched

Electronic data base consulted during the international search (name of data base and, where practical, search terms used)

EPO-Internal, WPI Data

C. DOCUMENTS CONSIDERED TO BE RELEVANT

Category*	Citation of document, with indication, where appropriate, of the relevant passages	Relevant to claim No.
X	MICROSOFT: "Windows Media Services 9 Series in Windows Server 2003. Reviewer's Guide" INTERNET ARTICLE, [Online] 22 April 2003 (2003-04-22), pages 1-25, XP002384215 Retrieved from the Internet: URL:http://download.microsoft.com/download/7/8/0/7800026e-3785-4cd8-be29-ac20371d12f8/Server_2003_RG_Final.pdf> [retrieved on 2006-06-07] page 7 - page 9 -----	1-23
X	WO 02/39718 A (LOUDEYE TECHNOLOGIES, INC.) 16 May 2002 (2002-05-16) page 4 - page 19 -----	1-23

-/--

[X] Further documents are listed in the continuation of Box C.

[X] See patent family annex.

* Special categories of cited documents :

"A" document defining the general state of the art which is not considered to be of particular relevance

"E" earlier document but published on or after the international filing date

"L" document which may throw doubts on priority claim(s) or which is cited to establish the publication date of another citation or other special reason (as specified)

"O" document referring to an oral disclosure, use, exhibition or other means

"P" document published prior to the international filing date but later than the priority date claimed

"T" later document published after the international filing date or priority date and not in conflict with the application but cited to understand the principle or theory underlying the invention

"X" document of particular relevance; the claimed invention cannot be considered novel or cannot be considered to involve an inventive step when the document is taken alone

"Y" document of particular relevance; the claimed invention cannot be considered to involve an inventive step when the document is combined with one or more other such documents, such combination being obvious to a person skilled in the art.

"&" document member of the same patent family

Date of the actual completion of the international search	Date of mailing of the international search report
8 June 2006	28/06/2006
Name and mailing address of the ISA/ European Patent Office, P.B. 5818 Patentlaan 2 NL – 2280 HV Rijswijk Tel. (+31-70) 340-2040, Tx. 31 651 epo nl, Fax: (+31-70) 340-3016	Authorized officer Jurca, A

2

Form PCT/ISA/210 (second sheet) (April 2005)

DISH EXHIBIT 2002, Page 1137
Aylo Freesites Ltd. v. Dish Technologies L.L.C.
IPR2024-00047

INTERNATIONAL SEARCH REPORT

International application No
PCT/US2006/004896

C(Continuation). DOCUMENTS CONSIDERED TO BE RELEVANT

Category*	Citation of document, with indication, where appropriate, of the relevant passages	Relevant to claim No.
X	US 5 996 015 A (DAY ET AL.) 30 November 1999 (1999-11-30) column 1 - column 6 -----	1-23
X	KRISHNAN V. ET AL.: "Customized Internet radio" COMPUTER NETWORKS, ELSEVIER SCIENCE PUBLISHERS B.V., AMSTERDAM, NL, vol. 33, no. 1-6, June 2000 (2000-06), pages 609-618, XP004304795 ISSN: 1389-1286 page 613 - page 618 -----	1-23
P,X	WO 2005/084381 A (PACKETVIDEO NETWORK SOLUTIONS, INC; ZENG, THOMAS; FOSTER, MICHAEL; SEV) 15 September 2005 (2005-09-15) page 2 - page 16 -----	1-23

Form PCT/ISA/210 (continuation of second sheet) (April 2005)

DISH EXHIBIT 2002, Page 1138
Aylo Freesites Ltd. v. Dish Technologies L.L.C.
IPR2024-00047

INTERNATIONAL SEARCH REPORT

Information on patent family members

International application No
PCT/US2006/004896

Patent document cited in search report	Publication date	Patent family member(s)	Publication date
WO 0239718 A	16-05-2002	AU 3774802 A	21-05-2002
US 5996015 A	30-11-1999	NONE	
WO 2005084381 A	15-09-2005	WO 2005086016 A1	15-09-2005

UNITED STATES
PATENT AND TRADEMARK OFFICE

P.O. Box 1450
Alexandria, VA 22313 - 1450
www.uspto.gov

ELECTRONIC ACKNOWLEDGEMENT RECEIPT

APPLICATION #	RECEIPT DATE / TIME	ATTORNEY DOCKET #
16/876,579	**11/17/2021 12:11:47 PM ET**	**066.0141X1C9**

Title of Invention

APPARATUS, SYSTEM, AND METHOD FOR MULTI-BITRATE CONTENT STREAMING

Application Information

APPLICATION TYPE	Utility - Nonprovisional Application under 35 USC 111(a)	PATENT #	-
CONFIRMATION #	3720	FILED BY	Francene Stewart
PATENT CENTER #	60403474	FILING DATE	05/18/2020
CUSTOMER #	70560	FIRST NAMED INVENTOR	DAVID F. BRUECK
CORRESPONDENCE ADDRESS	-	AUTHORIZED BY	Brett Carlson

Documents

TOTAL DOCUMENTS: 53

DOCUMENT	PAGES	DESCRIPTION	SIZE (KB)
20211117_RCE_06-0141X1C9.pdf	3	Request for Continued Examination (RCE)	681 KB
20211117_IDSCertStmnt_066-0141.pdf	1	Transmittal Letter	123 KB
20211117_IDS-For_066-0141.pdf	7	Information Disclosure Statement (IDS) Form (SB08)	1011 KB
WO03041413A1.pdf	47	Non Patent Literature	1913 KB
WO2004021668A1.pdf	24	Non Patent Literature	906 KB
WO2004057832A1.pdf	23	Non Patent Literature	802 KB

WO2006086717A1.pdf	50	Non Patent Literature	1844 KB
EP1394973A2.pdf	31	Non Patent Literature	1571 KB
KR20050001167A.pdf	10	Non Patent Literature	772 KB
WO0245372A3.pdf	5	Non Patent Literature	143 KB
20211117_IDS-NPLsList1_066-0141.pdf	8	Information Disclosure Statement (IDS) Form (SB08)	1011 KB
ExhibitA-4_DISH_564_156ClaimChart-Chou031.pdf	47	Non Patent Literature	489 KB
ExhibitA-5_DISH_564_156ClaimChart-Durrant.pdf	37	Non Patent Literature	382 KB
ExhibitA-6_DISH_564_156ClaimChart-Gentric.pdf	49	Non Patent Literature	534 KB
ExhibitA-1_DISH_564_156ClaimChart-Akiyama.pdf	41	Non Patent Literature	509 KB
ExhibitA-2_DISH_564_56ClaimChart-AryeUS20020002708A1.pdf	44	Non Patent Literature	737 KB
ExhibitA-3_DISH_564_156ClaimChart-Carmel.pdf	52	Non Patent Literature	481 KB
ExhibitA-12_DISH_564_156ClaimChart-Quicktime.pdf	24	Non Patent Literature	236 KB
ExhibitA-	43	Non Patent Literature	559 KB

13_DISH_564_156ClaimChart-RaviUS6292834.pdf			
ExhibitA-14_DISH_564_156ClaimChart-RealOnePlayer.pdf	59	Non Patent Literature	7125 KB
ExhibitA-7_DISH_564_156ClaimChart-Kitamura.pdf	43	Non Patent Literature	1401 KB
ExhibitA-8_DISH_564_156ClaimChart-Klemets.pdf	50	Non Patent Literature	489 KB
ExhibitA-9_DISH_564_156ClaimChart-OplayoEP1298931.pdf	37	Non Patent Literature	379 KB
ExhibitA-10_DISH_564_156ClaimChart-QOAS.pdf	35	Non Patent Literature	9048 KB
ExhibitA-11_DISH_564_156 ClaimChart-QuickTimeChanges.pdf	25	Non Patent Literature	258 KB
ExhibitA-18_DISH_564_156ClaimChart_G2.pdf	61	Non Patent Literature	1232 KB
ExhibitB-1_DISH_554_680_555Claim Chart-Akiyama.pdf	60	Non Patent Literature	444 KB
ExhibitA-15_DISH_564_156ClaimChart-Walker.pdf	60	Non Patent Literature	573 KB
ExhibitA-	33	Non Patent Literature	348 KB

16_DISH_564_156ClaimChart-Wang230.pdf			
ExhibitA-17_DISH_564_156ClaimChart-Wu.pdf	41	Non Patent Literature	407 KB
ExhibitB-4_DISH_554_680_555ClaimChart-Chou031.pdf	64	Non Patent Literature	532 KB
ExhibitB-5_DISH_554_680_555ClaimChart-Durrant.pdf	57	Non Patent Literature	409 KB
ExhibitB-6_DISH_554_680_555ClaimChart-Gentric.pdf	56	Non Patent Literature	425 KB
ExhibitB-7_DISH_554_680_555ClaimChart-Kitamura.pdf	54	Non Patent Literature	383 KB
ExhibitB-2_DISH_554_680_555ClaimChart-AryeUS20020002708.pdf	61	Non Patent Literature	503 KB
ExhibitB-3_DISH_554_680_555ClaimChart-Carmel.pdf	61	Non Patent Literature	534 KB
ExhibitB-10_DISH_554_680_555ClaimChart-QOAS.pdf	60	Non Patent Literature	3298 KB
ExhibitB-11_DISH_554_680_555ClaimChart-QuickTimeChanges.pdf	56	Non Patent Literature	394 KB

ExhibitB-12_DISH_554_680_555ClaimChart-Quicktime.pdf	55	Non Patent Literature	371 KB
ExhibitB-8_DISH_554_680_555ClaimChart-Klemets.pdf	67	Non Patent Literature	549 KB
ExhibitB-9_DISH_554_680_555ClaimChart-OplayoEP1298931.pdf	57	Non Patent Literature	397 KB
ExhibitB-16_DISH_554_680_555ClaimChart-Wang230.pdf	56	Non Patent Literature	407 KB
ExhibitB-17_DISH_554_680_555ClaimChart-Wu.pdf	60	Non Patent Literature	438 KB
ExhibitB-13_DISH_554_680_555ClaimChart-RaviUS6292834.pdf	60	Non Patent Literature	492 KB
ExhibitB-14_DISH_554_680_555ClaimChart-RealOnePlayer.pdf	79	Non Patent Literature	4618 KB
ExhibitB-15_DISH_554_680_555ClaimChart-Walker.pdf	70	Non Patent Literature	538 KB
ExhibitB-19_DISH_554_680_555ClaimChart-Dey.pdf	63	Non Patent Literature	478 KB
ExhibitB-20_DISH_554_680_555ClaimChart-Microsoft.pdf	503	Non Patent Literature	2312 KB

DISH-RespondentsJointDisclosure-Oct22-2021.pdf	193	Non Patent Literature	2110 KB
RespondentsNoticeOf PriorArt-Sept10-2021.pdf	63	Non Patent Literature	560 KB
VerifiedResponse-ICON-Jun18-2021.pdf	78	Non Patent Literature	669 KB
RespondentJointDisclosureAug6-2021.pdf	183	Non Patent Literature	3158 KB
PelotonAmendedResponseToComplaint-Aug26-2021.pdf	137	Non Patent Literature	18184 KB

Digest

DOCUMENT	MESSAGE DIGEST(SHA-512)
20211117_RCE_06-0141X1C9.pdf	B52D1AB20B7479A1905822B266AEB0C7D125AD376583DD575CA55881FFBCE9562721E516EC2F1B8BB1EE49872C2207A0874D25137BDD81E0B63B283628F64150
20211117_IDSCertStmnt_066-0141.pdf	07A0E88561FB63F4A7493F23F0D2BB6169B63C641DF694023D487A53B8561C795F1381C0B1BB04A3E74D5746AC2D1F7317F17E29C08F1BE61057292B7BF22649
20211117_IDS-For_066-0141.pdf	20CA1F618031C8C2A8F21241A75C52B288801948771C29D270EA3EE6CA35D372B38E077C3EB31FB36F97985FD60D2C47004B47C42A10942BE01F19B5ACD21D04
WO03041413A1.pdf	40DA057AFAEC446CE3377A6DC30DF053D5C37114F8262012366BAA27DB7C34E437F7F3D385D8AA218C910A0F2167CC7FB696B6C701861825721EA5C0569D1780
WO2004021668A1.pdf	175CFF80CDD4C9F4BA4D9B7F0C5A968B070DFFCB4EE0E7EB9B023342BE701A13D07A36C2CFAC5BDCBEDD04EE8B9C0B

	BD1189F0EDB50D73811A23B3DB7DE21F94
WO2004057832A1.pdf	7921B8BA099C3C4FCAD20E4C089CE7624B3D810C3B70FCCC542AF3B1B7A74EC2456B4669604ADCED11D340C877CF79A4C632354D72E95F456ABF80F536CD8FAA
WO2006086717A1.pdf	525BF77FAB5B4759421BBCF452747B130AB2AA4BBBA184DED81C8B0A0B66F82FAB2DCCA28C65C33280C4E6C170ACCF674E30E483D2B3BEB2B4B3479B07E4CC3C
EP1394973A2.pdf	80CCC437ADE76ED7EE8753A51C7BAA540D38AFCE9F7E65CB4BC8EF584E5D1D589892E95441A82CDCD5929CD2B164684B76F133CDE679EF4BC8C26F8EC3046080
KR20050001167A.pdf	89E96D19116DFF59CCAB266E9874E8C995CDBC9EA2B7960FB033F3CC3935674772FEB2CA10129ADE2109B47B80FBB82D3E1154CF705E004E745B010E706FFA6F
WO0245372A3.pdf	D7D251E15CEA12C996504D64725FDBC245F6036541D47E432ECF60EE62CAA0AD0CC34E1102C5078F20591C7FC3E4871F7F76C6C667D954E0E448E7E597D763EC
20211117_IDS-NPLsList1_066-0141.pdf	015D1AF817EB519728706FBEDADA815A85FAA6A6CF38EF975FCC2857A0B0EE3C6AD5B3F2963CB1A77890813B8C657EDA8D84B542FDA0A7B0FF8C2FB8E90DC7AF
ExhibitA-4_DISH_564_156ClaimChart-Chou031.pdf	7C231F3580EE0AF092B46C02ABEBDA78A366EAA3A44CC93AFD53427F3B21BD646FC60180364FDCB5ACF6DC930A1C9C4A8CD4771FE302A3F5014F8F25375B6FF9
ExhibitA-5_DISH_564_156ClaimChart-Durrant.pdf	4BD832D4E904CFC95F254A7B38B44AFDA910735CDC5BB2B3E5F2E2C03EFC5461CA9EABE04B5BD5AEF55BC4A0D7CE55B30EB0DB513C326DBE0BA359A2C58A33A3
ExhibitA-6_DISH_564_156ClaimChart-Gentric.pdf	CE86611BE49A214D3D91491386DCCE9FE92CB517F5EEB7F84B776D413FCA3D79AE178BBF950C57B52F30D6894B9F0D03A175AE1BD50163FAE3B8B104956FE502
ExhibitA-1_DISH_564_156ClaimChart-	EB2F83E61D5EED0560122F603757FBB0C4EA15F16DC8E483555AC7DB117A9EB50EA1A5E2667C1A4C1F0952DA4FD083F82F

Akiyama.pdf	E0EC60AE4E5F12C9DAED9BCE4B4FA7
ExhibitA-2_DISH_564_56ClaimChart-AryeUS20020002708A1.pdf	1D8994E761EC41AC5473044429BABA6EED18E5C80E4FD27D6786FB9D8EE4B066AB3D42A5CC0148A34CCDAE3FEB327E89661F3AE4F95DBFD8AEE205C452BFDEF1
ExhibitA-3_DISH_564_156ClaimChart-Carmel.pdf	608A1E10EB60C336BE9E150AA91091E1087A884E73B9EA87F0BC879A3D41ECE7DB74B848D937AC81D93926594E5521FB7F66CF82F57644F26C3D692FAD516A0A
ExhibitA-12_DISH_564_156ClaimChart-Quicktime.pdf	B9A8668B4B98782A9DFCC10378F5C14A5C4B4C57EBC9F4C8400FFE3C2CE6BF2154EA289BF1FA331915D5CFF533F77EC42DAF972CBFB7E9347287597E1128924F
ExhibitA-13_DISH_564_156ClaimChart-RaviUS6292834.pdf	8CC3FDE10CDBB340B3D5B957AAF89A2865078EAF569E500142F3D8E744F14B2BC1EED3370E0A697CDD733058AC8ABA0FB55C6D888EB16AF18760F101D2C7B44A
ExhibitA-14_DISH_564_156ClaimChart-RealOnePlayer.pdf	DE408B933D46A286E0CD4688D7BE63C33FD937C7FE239221D5FD021C29AD3FB3381A5FDBE9BC1135D11285906062B6E9953CE1B97BBFF8B34AE8D3158817F11D
ExhibitA-7_DISH_564_156ClaimChart-Kitamura.pdf	CFD585E11C1E372F3AE55153DE568FD30F51957C33E907E1BA4D07A3E06C669052E5F2BD7A860261B41D30BFE8B2F270AA72F1199282D914AC631D792B6D7A4F
ExhibitA-8_DISH_564_156ClaimChart-Klemets.pdf	9D9A3E5568DBB8A3449A6ED47407CD12A4C0E2802DFE979DB2FB49BD6110321C4C215EDD7725F09EF5FBBFD4FCA733157FA1410525C03B173CD8668843EF55AA
ExhibitA-9_DISH_564_156ClaimChart-OplayoEP1298931.pdf	AEC7056DC44EAC935C57E1931A61CAB09217176C0BC7D656DCAB67AA8207C05E41A0A4435A45408B765B51F97B81234BD5942D5C7943D7BCEE3E265B661AB31B
ExhibitA-10_DISH_564_156ClaimChart-QOAS.pdf	CE8ECBFCC8F0863578A994CED6E9F18C997905B82A672611EA92666311563CE7F4D9C8DBEC78DA2983E5AC29AC2DF3718803EA63BFE5DB5516362798F281C21F
ExhibitA-11_DISH_564_156 ClaimChart-	54214D853A4732666E9185442C8E6114649D5C699E3CD6284EBCE755248B2DA952A7DD6ED6D95871D7D773AA9F058EB68C

QuickTimeChanges.pdf	79C948CD83C973E956DFFE5D5D5ABA
ExhibitA-18_DISH_564_156ClaimChart_G2.pdf	111A47E51D2EF6599A26AADAF61FC7BA147B2F9356DCF8E7C89C23A4CEC294DCE93841DE9A55EF33DFA1C2858ABD707C98468C3D91B9E0F0007A8602CD681628
ExhibitB-1_DISH_554_680_555ClaimChart-Akiyama.pdf	ABB55707E24ADE355A7D5BE89731E6691AA42F311E1780E19ABB2AEBF8614D5BEBC1CACDF0200C0A57301D400A378EE753956152A9D0AD16C2316E848E0C852F
ExhibitA-15_DISH_564_156ClaimChart-Walker.pdf	94A81D8BDA4720C160C621BE3A62CB836EE80CFFFA4AFD12EBD5183FD3229E8BD98927584B6B7659602FB1D812EAF51C17B5CFD0CA07169ECDF403BE8FC77B27
ExhibitA-16_DISH_564_156ClaimChart-Wang230.pdf	74FB7B8B43226623B1A5E4E328CC1108929699687476E005CFF55B426920C7D3F12DDDE267E542C051FEB447BCB70F41BD437478086D3CFC92A8FAEFC9EC3616
ExhibitA-17_DISH_564_156ClaimChart-Wu.pdf	8D739DEAECB57DD608A5BB564FA25D5BC6E7C87915C060AE2F296CECC4828A77473E7178E4C81B4A4E3C7AD24F3AF7436844E8F1FC85605B9698C6617D66E1AB
ExhibitB-4_DISH_554_680_555ClaimChart-Chou031.pdf	CFA99EF5A20803B777ED88CD9EF45105D7622A6BCE722D1A5B3D1A7C465A22FDD4BF6F26C157D05E54183D30E0E174AB5EF35BB715E49D303B83D2664C378BC1
ExhibitB-5_DISH_554_680_555ClaimChart-Durrant.pdf	6330A56CF5352E3A06578D3BA558245B3DB4795286B08E779EBA52FE882E46C6831D1527392078C015844FDCA00D7F9ED78CD911F956EADF8885CE6865F2DD78
ExhibitB-6_DISH_554_680_555ClaimChart-Gentric.pdf	25E33F2E7245917E69BD481A94F60F67AA5C431D44F9CD01D8E0F3DD2018D29FCFA2A012A67607115555D412C57BCF6B8BE3CD897DE4D850E2D88FFD5D2235FB
ExhibitB-7_DISH_554_680_555ClaimChart-Kitamura.pdf	D50C930AEA491B985A1CE2CD5C5851A81C8ADA2E2F7426B5B4D30875C48D62536972687DE7E23536C5BD7AEFA7D060B4F5AB1C9F207CF38741B2A4132ABFE744
ExhibitB-2_DISH_554_680_555ClaimCh	045BC4CF0C58820D10B7662221AB6EF9183A7CA75BD41AB6EB780034948F60FFF3F15CFE8C4D0E6C408C2DF4482D6026BB

art-AryeUS20020002708.pdf	BF8A47AE48F77C9AB2AFBA708C47CF
ExhibitB-3_DISH_554_680_555ClaimChart-Carmel.pdf	E84A36B3961372B0695DD17736C99DD3A1B6CB21F054E6FAF5D9711EAFC264DBA71700E168490F787B3EF01BE912C4B2C29B9C3AEB7FA169CB5C1943791C13C0
ExhibitB-10_DISH_554_680_555ClaimChart-QOAS.pdf	6C6C1F2E171B37914BBCBE41C1826C7A70B26D55678A5FD6084415DC3C323675A67F5907568105A08AB7AB9DDD750B575B038359C810057FB5823618E67A64DD
ExhibitB-11_DISH_554_680_555ClaimChart-QuickTimeChanges.pdf	9D56FB63D75392F2ED8F3F42E40FD960E0CBA088FD5EF29F67A8F346229D14DDFB7AA7B0D5DAF24D24ACCA60ECA7CBA31DEDC133694E789DAF000AED12DD14CE
ExhibitB-12_DISH_554_680_555ClaimChart-Quicktime.pdf	F0691602D2EB964146C4DC8E29D2A4B6609DC17F9EF53375A505F3C53994E2334C7940D8CDB1FE70E50C4C85E5E12B487345ED7D1B3AAC0D9C87E0BF206AB1CC
ExhibitB-8_DISH_554_680_555ClaimChart-Klemets.pdf	D8EF0C52DD5BBF0753B1F1C16D81F9269A7CE0181CAE5C79FE2F76B1FCEDD54EC9AEF1BFF09D76295494D32C7E6648C8D40BE94DAAAB5FC8ABD0F97E0C62EB00
ExhibitB-9_DISH_554_680_555ClaimChart-OplayoEP1298931.pdf	605BA0875882A584CCD07F07B78062E07333041890D620BA6E9497FF1263A6C0965C6CBB3073B273E954ACD9AEB8FB31FCFC250EB1ED42C281919EB3EF22DEDA
ExhibitB-16_DISH_554_680_555ClaimChart-Wang230.pdf	B041B4A4E8014D8CA063DFC10927485926E4DB9940CA8A4C7A2D5622373254925 5C5939C2E8DED1B9D073DCA5FE1D6745C29D424F333F0C9D58390E152163C36
ExhibitB-17_DISH_554_680_555ClaimChart-Wu.pdf	AD1B9FFAA63D7546EBE4B76ADD0EC96E1D6BF392015C68799B347D16D2C84E7D8DF2A91DEA2A0DD7F93C7689A95ED6810047E7A5334F144C8C195693A4F97AF8
ExhibitB-13_DISH_554_680_555ClaimChart-RaviUS6292834.pdf	95576BC140C0A52B5D70B89A053EDB0D9D4E22B348E0E29D37FE18BA8D8FC56D72B3E6018C02503F5C5467226D26AE013F2CAF9D67FA9BC483801ECA86BADD46
ExhibitB-14_DISH_554_680_555ClaimC	AA9DBFE61B331E023A38942B4E552DDE0C867B9B5D669715ECEA1239088BCCDAA5B5DB15DEC00D4A545089A40FD7D7FA

hart-RealOnePlayer.pdf	C1694FC8F2486622CE0384D6DDC1E84F
ExhibitB-15_DISH_554_680_555ClaimChart-Walker.pdf	75CD7EB172A62D5373153E77B7A62DDE912966EFEB51406217ED251CAFEC3E3620E038F65DEB15751BBC4DD77F176A8FAFF23BC055BD9AEF44BE8DD4EDDB2F8F
ExhibitB-19_DISH_554_680_555ClaimChart-Dey.pdf	A7E01AA372D9E42E4B7E1DCF2FBDD26AAB1DC2A4DCE0276A7AA8BDD7909DB90FB036651A76B3FA633698169BBD032BF3BA6AD02525630B4E0507A48D68A27B81
ExhibitB-20_DISH_554_680_555ClaimChart-Microsoft.pdf	3779D8EFEFE0BA07061DD5B4DD519D4E08C1305DA8D27AADA702B728B32F68998EDC01B862F85744004C830E8EBF95818F47397CA7FA8DB4FD56B3E64D84AE06
DISH-RespondentsJointDisclosure-Oct22-2021.pdf	04A257E5C2EDE867A3320152D5F5CA5716CB9A9108DC33A0B5FFDA4794D88BE445CAFD88CC53EDD43C152F0E90CB3DE9982C1F73AF6E3AE86AC3CA1D7A942234
RespondentsNoticeOf PriorArt-Sept10-2021.pdf	BE1860A401284C3C5622B6AB03CBC261CC27DD1BF0F34088A41C1A69EA0DB2ABA7FDB0FE29E0A638880F87F540A14CE50D1EB66B71BB00DE9BCA86B78E222076
VerifiedResponse-ICON-Jun18-2021.pdf	AC0C4BBAC8F4505CC03105444CD5397A94BE2BE68C18F5EC37CC7C94D73DFA59ACC13E371BA3B3BBA1FF9FE4B394FC18F88590D5BB3E1A818DCB5E8216194C20
RespondentJointDisclosureAug6-2021.pdf	311862C8E989F7AC88F0BC5AE5BFAC8BE3B100A3B20ADC2359F5E9645BD52544433EFF26293698F8470D9AFC44BF857459541865C6E7D05A7831D9FE50256EEC
PelotonAmendedResponseToComplaint-Aug26-2021.pdf	1040BE17AFBB8E7A7820EABE7E3400A8DACAEF1C11C3466FF47BF4EEAC0077FECBCBB8E437AB2239B53DF51A63EBAF9C418689FAFDA95D0BE47B7FB008638651

This Acknowledgement Receipt evidences receipt on the noted date by the USPTO of the indicated documents, characterized by the applicant, and including page counts, where applicable. It serves as evidence of receipt similar to a Post Card, as described in MPEP 503.

New Applications Under 35 U.S.C. 111

If a new application is being filed and the application includes the necessary components for filing date (see 37 CFR 1.53(b)-(d) and MPEP 506), a Filing Receipt (37 CFR 1.54) will be issued in due course and the date shown on this Acknowledgement Receipt will establish the filing date of the application

National Stage of an International Application under 35 U.S.C. 371

If a timely submission to enter the national stage of an international application is compliant with the conditions of 35 U.S.C. 371 and other applicable requirements a Form PCT/DO/EO/903 indicating acceptance of the application as a national stage submission under 35 U.S.C. 371 will be issued in addition to the Filing Receipt, in due course.

New International Application Filed with the USPTO as a Receiving Office

If a new international application is being filed and the international application includes the necessary components for an international filing date (see PCT Article 11 and MPEP 1810), a Notification of the International Application Number and of the International Filing Date (Form PCT/RO/105) will be issued in due course, subject to prescriptions concerning national security, and the date shown on this Acknowledgement Receipt will establish the international filing date of the application.

PTO/SB/08a (02-18)
Approved for use through 11/30/2020. OMB 0651-0031
U.S. Patent and Trademark Office; U.S. DEPARTMENT OF COMMERCE
Under the Paperwork Reduction Act of 1995, no persons are required to respond to a collection of information unless it contains a valid OMB control number.

INFORMATION DISCLOSURE STATEMENT BY APPLICANT

(Not for submission under 37 CFR 1.99)

Application Number	16876579
Filing Date	2020-05-18
First Named Inventor	DAVID F. BRUECK
Art Unit	2454
Examiner Name	Chirag R. Patel
Attorney Docket Number	066.0141X1C9

U.S.PATENTS Remove

Examiner Initial*	Cite No	Patent Number	Kind Code[1]	Issue Date	Name of Patentee or Applicant of cited Document	Pages,Columns,Lines where Relevant Passages or Relevant Figures Appear
	1					

If you wish to add additional U.S. Patent citation information please click the Add button. Add

U.S.PATENT APPLICATION PUBLICATIONS Remove

Examiner Initial*	Cite No	Publication Number	Kind Code[1]	Publication Date	Name of Patentee or Applicant of cited Document	Pages,Columns,Lines where Relevant Passages or Relevant Figures Appear
	1					

If you wish to add additional U.S. Published Application citation information please click the Add button. Add

FOREIGN PATENT DOCUMENTS Remove

Examiner Initial*	Cite No	Foreign Document Number[3]	Country Code[2] i	Kind Code[4]	Publication Date	Name of Patentee or Applicant of cited Document	Pages,Columns,Lines where Relevant Passages or Relevant Figures Appear	T[5]
	1							

If you wish to add additional Foreign Patent Document citation information please click the Add button Add

NON-PATENT LITERATURE DOCUMENTS Remove

Examiner Initials*	Cite No	Include name of the author (in CAPITAL LETTERS), title of the article (when appropriate), title of the item (book, magazine, journal, serial, symposium, catalog, etc), date, pages(s), volume-issue number(s), publisher, city and/or country where published.	T[5]

INFORMATION DISCLOSURE STATEMENT BY APPLICANT (Not for submission under 37 CFR 1.99)		
	Application Number	16876579
	Filing Date	2020-05-18
	First Named Inventor	DAVID F. BRUECK
	Art Unit	2454
	Examiner Name	Chirag R. Patel
	Attorney Docket Number	066.0141X1C9

	1	MUNTEAN, G-M., "A New Adaptive Multimedia Streaming System for All-iP Multi-Service Networks", IEEE Trans. On Broadcasting, March 2004, pp. 1-10, Vol. 50, No. 1.	
	2	Akamai buys InterVu, February 7, 2000.	
	3	Akamai, Akamai Completes Acquisition of Speedera Networks	
	4	Bill Gates Unveils the Next Wave of Digital Media with Windows Media 9 Series, September 3, 2002.	
	5	Darwin Steaming Server Source Code Developer Notes, June 15, 2021, Darwin Steaming Server 2	
	6	IBM Goes Straight to Video - CNET, June 15, 2021	
	7	News in Brief: IBM VideoCharger, December 18, 1996	
	8	BIRNEY, "Intelligent Streaming", May 21, 2021	
	9	InterVu & Excalibur Partner to Deliver Live Internet Newscasts - Bloomberg, December 9, 1999.	
	10	Introduction to Streaming Media with RealOne Player, October 1, 2002.	
	11	Macromedia Delivers Macromedia Flash Communication Server MX Breakthrough server unifies communications and applications to deliver live, human interactions on the Internet, July 9, 2002.	

INFORMATION DISCLOSURE STATEMENT BY APPLICANT (Not for submission under 37 CFR 1.99)		
	Application Number	16876579
	Filing Date	2020-05-18
	First Named Inventor	DAVID F. BRUECK
	Art Unit	2454
	Examiner Name	Chirag R. Patel
	Attorney Docket Number	066.0141X1C9

	12	Press Releases: Macromedia Flash Media Server 2 Now Available. Flash Media Server 2 Brings the Power of the Flash Platform to Web Video.	
	13	Move Networks: The Story of a Failure - GigaOm	
	14	QuickTime 6: Summary of Changes and Enhancements	
	15	CHOU, et al., "Rate-Distortion Optimized Receiver-Driven Streaming over Best-Effort Networks", IEEE Fourth Workshop on Multimedia Signal Processing, 3 October 2001, pp. 1-10	
	16	FESTA P., RealNetworks tests G2, July 13, 1998.	
	17	RealNetworks Production Guide, with RealOne Player, October 1, 2002.	
	18	RealSystem G2 Production Guide BETA 1 Release	
	19	Sandpiper Networks Signs Partner Deals - InternetNews, October 7, 1999.	
	20	TOPIC, M. "Streaming Media Demystified", McGraw-Hill TELECOM, 2002	
	21	GALLAGHER, B., "Streaming Video From End to End", ITProToday, Compute Engines, Feb. 28, 1999	
	22	Move Networks: The Fall of Move Networks, Jan. 26, 2010.	

INFORMATION DISCLOSURE STATEMENT BY APPLICANT (Not for submission under 37 CFR 1.99)	Application Number	16876579
	Filing Date	2020-05-18
	First Named Inventor	DAVID F. BRUECK
	Art Unit	2454
	Examiner Name	Chirag R. Patel
	Attorney Docket Number	066.0141X1C9

	23	CONKLIN, G.J., et al. "Video Coding for Streaming Media Delivery on the Internet", IEEE Trans. on Circuits and Systems for Video Technology, March 3, 2001, pp. 281, Vol. 11. No 3.

If you wish to add additional non-patent literature document citation information please click the Add button Add

EXAMINER SIGNATURE

Examiner Signature		Date Considered	

*EXAMINER: Initial if reference considered, whether or not citation is in conformance with MPEP 609. Draw line through a citation if not in conformance and not considered. Include copy of this form with next communication to applicant.

[1] See Kind Codes of USPTO Patent Documents at www.USPTO.GOV or MPEP 901.04. [2] Enter office that issued the document, by the two-letter code (WIPO Standard ST.3). [3] For Japanese patent documents, the indication of the year of the reign of the Emperor must precede the serial number of the patent document. [4] Kind of document by the appropriate symbols as indicated on the document under WIPO Standard ST.16 if possible. [5] Applicant is to place a check mark here if English language translation is attached.

INFORMATION DISCLOSURE STATEMENT BY APPLICANT (Not for submission under 37 CFR 1.99)		
	Application Number	16876579
	Filing Date	2020-05-18
	First Named Inventor	DAVID F. BRUECK
	Art Unit	2454
	Examiner Name	Chirag R. Patel
	Attorney Docket Number	066.0141X1C9

CERTIFICATION STATEMENT

Please see 37 CFR 1.97 and 1.98 to make the appropriate selection(s):

That each item of information contained in the information disclosure statement was first cited in any communication from a foreign patent office in a counterpart foreign application not more than three months prior to the filing of the information disclosure statement. See 37 CFR 1.97(e)(1).

OR

☐ That no item of information contained in the information disclosure statement was cited in a communication from a foreign patent office in a counterpart foreign application, and, to the knowledge of the person signing the certification after making reasonable inquiry, no item of information contained in the information disclosure statement was known to any individual designated in 37 CFR 1.56(c) more than three months prior to the filing of the information disclosure statement. See 37 CFR 1.97(e)(2).

☒ See attached certification statement.

The fee set forth in 37 CFR 1.17 (p) has been submitted herewith.

A certification statement is not submitted herewith.

SIGNATURE

A signature of the applicant or representative is required in accordance with CFR 1.33, 10.18. Please see CFR 1.4(d) for the form of the signature.

Signature	/BRETT A. CARLSON/	Date (YYYY-MM-DD)	2021-11-17
Name/Print	Brett A. Carlson	Registration Number	39928

This collection of information is required by 37 CFR 1.97 and 1.98. The information is required to obtain or retain a benefit by the public which is to file (and by the USPTO to process) an application. Confidentiality is governed by 35 U.S.C. 122 and 37 CFR 1.14. This collection is estimated to take 1 hour to complete, including gathering, preparing and submitting the completed application form to the USPTO. Time will vary depending upon the individual case. Any comments on the amount of time you require to complete this form and/or suggestions for reducing this burden, should be sent to the Chief Information Officer, U.S. Patent and Trademark Office, U.S. Department of Commerce, P.O. Box 1450, Alexandria, VA 22313-1450. DO NOT SEND FEES OR COMPLETED FORMS TO THIS ADDRESS. **SEND TO: Commissioner for Patents, P.O. Box 1450, Alexandria, VA 22313-1450.**

Privacy Act Statement

The Privacy Act of 1974 (P.L. 93-579) requires that you be given certain information in connection with your submission of the attached form related to a patent application or patent. Accordingly, pursuant to the requirements of the Act, please be advised that: (1) the general authority for the collection of this information is 35 U.S.C. 2(b)(2); (2) furnishing of the information solicited is voluntary; and (3) the principal purpose for which the information is used by the U.S. Patent and Trademark Office is to process and/or examine your submission related to a patent application or patent. If you do not furnish the requested information, the U.S. Patent and Trademark Office may not be able to process and/or examine your submission, which may result in termination of proceedings or abandonment of the application or expiration of the patent.

The information provided by you in this form will be subject to the following routine uses:

1. The information on this form will be treated confidentially to the extent allowed under the Freedom of Information Act (5 U.S.C. 552) and the Privacy Act (5 U.S.C. 552a). Records from this system of records may be disclosed to the Department of Justice to determine whether the Freedom of Information Act requires disclosure of these record s.

2. A record from this system of records may be disclosed, as a routine use, in the course of presenting evidence to a court, magistrate, or administrative tribunal, including disclosures to opposing counsel in the course of settlement negotiations.

3. A record in this system of records may be disclosed, as a routine use, to a Member of Congress submitting a request involving an individual, to whom the record pertains, when the individual has requested assistance from the Member with respect to the subject matter of the record.

4. A record in this system of records may be disclosed, as a routine use, to a contractor of the Agency having need for the information in order to perform a contract. Recipients of information shall be required to comply with the requirements of the Privacy Act of 1974, as amended, pursuant to 5 U.S.C. 552a(m).

5. A record related to an International Application filed under the Patent Cooperation Treaty in this system of records may be disclosed, as a routine use, to the International Bureau of the World Intellectual Property Organization, pursuant to the Patent Cooperation Treaty.

6. A record in this system of records may be disclosed, as a routine use, to another federal agency for purposes of National Security review (35 U.S.C. 181) and for review pursuant to the Atomic Energy Act (42 U.S.C. 218(c)).

7. A record from this system of records may be disclosed, as a routine use, to the Administrator, General Services, or his/her designee, during an inspection of records conducted by GSA as part of that agency's responsibility to recommend improvements in records management practices and programs, under authority of 44 U.S.C. 2904 and 2906. Such disclosure shall be made in accordance with the GSA regulations governing inspection of records for this purpose, and any other relevant (i.e., GSA or Commerce) directive. Such disclosure shall not be used to make determinations about individuals.

8. A record from this system of records may be disclosed, as a routine use, to the public after either publication of the application pursuant to 35 U.S.C. 122(b) or issuance of a patent pursuant to 35 U.S.C. 151. Further, a record may be disclosed, subject to the limitations of 37 CFR 1.14, as a routine use, to the public if the record was filed in an application which became abandoned or in which the proceedings were terminated and which application is referenced by either a published application, an application open to public inspections or an issued patent.

9. A record from this system of records may be disclosed, as a routine use, to a Federal, State, or local law enforcement agency, if the USPTO becomes aware of a violation or potential violation of law or regulation.

PTO/SB/08a (02-18)
Approved for use through 11/30/2020. OMB 0651-0031
U.S. Patent and Trademark Office; U.S. DEPARTMENT OF COMMERCE
Under the Paperwork Reduction Act of 1995, no persons are required to respond to a collection of information unless it contains a valid OMB control number.

INFORMATION DISCLOSURE STATEMENT BY APPLICANT

(Not for submission under 37 CFR 1.99)

Application Number	16876579
Filing Date	2020-05-18
First Named Inventor	DAVID F. BRUECK
Art Unit	2454
Examiner Name	Chirag R. Patel
Attorney Docket Number	066.0141X1C9

U.S.PATENTS Remove

Examiner Initial*	Cite No	Patent Number	Kind Code[1]	Issue Date	Name of Patentee or Applicant of cited Document	Pages,Columns,Lines where Relevant Passages or Relevant Figures Appear
	1					

If you wish to add additional U.S. Patent citation information please click the Add button. Add

U.S.PATENT APPLICATION PUBLICATIONS Remove

Examiner Initial*	Cite No	Publication Number	Kind Code[1]	Publication Date	Name of Patentee or Applicant of cited Document	Pages,Columns,Lines where Relevant Passages or Relevant Figures Appear
	1					

If you wish to add additional U.S. Published Application citation information please click the Add button. Add

FOREIGN PATENT DOCUMENTS Remove

Examiner Initial*	Cite No	Foreign Document Number[3]	Country Code[2] i	Kind Code[4]	Publication Date	Name of Patentee or Applicant of cited Document	Pages,Columns,Lines where Relevant Passages or Relevant Figures Appear	T[5]
	1							

If you wish to add additional Foreign Patent Document citation information please click the Add button Add

NON-PATENT LITERATURE DOCUMENTS Remove

Examiner Initials*	Cite No	Include name of the author (in CAPITAL LETTERS), title of the article (when appropriate), title of the item (book, magazine, journal, serial, symposium, catalog, etc), date, pages(s), volume-issue number(s), publisher, city and/or country where published.	T[5]

INFORMATION DISCLOSURE STATEMENT BY APPLICANT (Not for submission under 37 CFR 1.99)	Application Number	16876579
	Filing Date	2020-05-18
	First Named Inventor	DAVID F. BRUECK
	Art Unit	2454
	Examiner Name	Chirag R. Patel
	Attorney Docket Number	066.0141X1C9

	1	Claim Chart Against U.S. Patent No. 9,407,564 ("'564 patent") Akiyama et al	
	2	Claim Chart Against U.S. Patent No. 9,407,564 ("'564 patent") Arye et al.	
	3	Claim Chart Against U.S. Patent No. 9,407,564 ("'564 patent") Carmel et al.	
	4	Claim Chart Against U.S. Patent No. 9,407,564 ("'564 patent") Chou et al.	
	5	Claim Chart Against U.S. Patent No. 9,407,564 ("'564 patent") Durrant et al.	
	6	Claim Chart Against U.S. Patent No. 9,407,564 ("'564 patent") Gentric	
	7	Claim Chart Against U.S. Patent No. 9,407,564 ("'564 patent") Kitamura	
	8	Claim Chart Against U.S. Patent No. 9,407,564 ("'564 patent") Klemets et al.	
	9	Claim Chart Against U.S. Patent No. 9,407,564 ("'564 patent") Oplayo et al.	
	10	Claim Chart Against U.S. Patent No. 9,407,564 ("'564 patent") QOAS	
	11	Claim Chart Against U.S. Patent No. 9,407,564 ("'564 patent") QuickTime Changes	

INFORMATION DISCLOSURE STATEMENT BY APPLICANT (Not for submission under 37 CFR 1.99)	Application Number	16876579
	Filing Date	2020-05-18
	First Named Inventor	DAVID F. BRUECK
	Art Unit	2454
	Examiner Name	Chirag R. Patel
	Attorney Docket Number	066.0141X1C9

	12	Claim Chart Against U.S. Patent No. 9,407,564 ("'564 patent") QuickTime	
	13	Claim Chart Against U.S. Patent No. 9,407,564 ("'564 patent") Ravi	
	14	Claim Chart Against U.S. Patent No. 9,407,564 ("'564 patent") RealOne Player	
	15	Claim Chart Against U.S. Patent No. 9,407,564 ("'564 patent") Walker	
	16	Claim Chart Against U.S. Patent No. 9,407,564 ("'564 patent") Wang	
	17	Claim Chart Against U.S. Patent No. 9,407,564 ("'564 patent") Wu	
	18	Claim Chart Against U.S. Patent No. 9,407,564 ("'564 patent") RealSystem G2	
	19	Claim Chart Against U.S. Patent No. 10,469,554 ("'554 patent") Akiyama et al.	
	20	Claim Chart Against U.S. Patent No. 10,469,554 ("'554 patent") Ayre	
	21	Claim Chart Against U.S. Patent No. 10,469,554 ("'554 patent") Carmel et. al.	
	22	Claim Chart Against U.S. Patent No. 10,469,554 ("'554 patent") Chou et. al.	

INFORMATION DISCLOSURE STATEMENT BY APPLICANT (Not for submission under 37 CFR 1.99)	Application Number	16876579
	Filing Date	2020-05-18
	First Named Inventor	DAVID F. BRUECK
	Art Unit	2454
	Examiner Name	Chirag R. Patel
	Attorney Docket Number	066.0141X1C9

	23	Claim Chart Against U.S. Patent No. 10,469,554 ("'554 patent") Durrant et. al.	
	24	Claim Chart Against U.S. Patent No. 10,469,554 ("'554 patent") Gentric	
	25	Claim Chart Against U.S. Patent No. 10,469,554 ("'554 patent") Kitamura	
	26	Claim Chart Against U.S. Patent No. 10,469,554 ("'554 patent") Klemets	
	27	Claim Chart Against U.S. Patent No. 10,469,554 ("'554 patent") Oplayo	
	28	Claim Chart Against U.S. Patent No. 10,469,554 ("'554 patent") QOAS	
	29	Claim Chart Against U.S. Patent No. 10,469,554 ("'554 patent") QuickTime Changes	
	30	Claim Chart Against U.S. Patent No. 10,469,554 ("'554 patent") QuickTime	
	31	Claim Chart Against U.S. Patent No. 10,469,554 ("'554 patent") Ravi	
	32	Claim Chart Against U.S. Patent No. 10,469,554 ("'554 patent") RealOne Player	
	33	Claim Chart Against U.S. Patent No. 10,469,554 ("'554 patent") Walker	

INFORMATION DISCLOSURE STATEMENT BY APPLICANT (Not for submission under 37 CFR 1.99)	Application Number	16876579
	Filing Date	2020-05-18
	First Named Inventor	DAVID F. BRUECK
	Art Unit	2454
	Examiner Name	Chirag R. Patel
	Attorney Docket Number	066.0141X1C9

	34	Claim Chart Against U.S. Patent No. 10,469,554 ("'554 patent") Wang	
	35	Claim Chart Against U.S. Patent No. 10,469,554 ("'554 patent") Wu	
	36	Claim Chart Against U.S. Patent No. 10,469,554 ("'554 patent") Dey	
	37	Claim Chart Against U.S. Patent No. 10,469,554 ("'554 patent") Microsoft	

If you wish to add additional non-patent literature document citation information please click the Add button Add

EXAMINER SIGNATURE

Examiner Signature		Date Considered	

*EXAMINER: Initial if reference considered, whether or not citation is in conformance with MPEP 609. Draw line through a citation if not in conformance and not considered. Include copy of this form with next communication to applicant.

[1] See Kind Codes of USPTO Patent Documents at www.USPTO.GOV or MPEP 901.04. [2] Enter office that issued the document, by the two-letter code (WIPO Standard ST.3). [3] For Japanese patent documents, the indication of the year of the reign of the Emperor must precede the serial number of the patent document. [4] Kind of document by the appropriate symbols as indicated on the document under WIPO Standard ST.16 if possible. [5] Applicant is to place a check mark here if English language translation is attached.

INFORMATION DISCLOSURE STATEMENT BY APPLICANT (Not for submission under 37 CFR 1.99)	Application Number	16876579
	Filing Date	2020-05-18
	First Named Inventor	DAVID F. BRUECK
	Art Unit	2454
	Examiner Name	Chirag R. Patel
	Attorney Docket Number	066.0141X1C9

CERTIFICATION STATEMENT

Please see 37 CFR 1.97 and 1.98 to make the appropriate selection(s):

That each item of information contained in the information disclosure statement was first cited in any communication from a foreign patent office in a counterpart foreign application not more than three months prior to the filing of the information disclosure statement. See 37 CFR 1.97(e)(1).

OR

☐ That no item of information contained in the information disclosure statement was cited in a communication from a foreign patent office in a counterpart foreign application, and, to the knowledge of the person signing the certification after making reasonable inquiry, no item of information contained in the information disclosure statement was known to any individual designated in 37 CFR 1.56(c) more than three months prior to the filing of the information disclosure statement. See 37 CFR 1.97(e)(2).

☒ See attached certification statement.

The fee set forth in 37 CFR 1.17 (p) has been submitted herewith.

A certification statement is not submitted herewith.

SIGNATURE

A signature of the applicant or representative is required in accordance with CFR 1.33, 10.18. Please see CFR 1.4(d) for the form of the signature.

Signature	/BRETT A. CARLSON/	Date (YYYY-MM-DD)	2021-11-17
Name/Print	Brett A. Carslson	Registration Number	39,928

This collection of information is required by 37 CFR 1.97 and 1.98. The information is required to obtain or retain a benefit by the public which is to file (and by the USPTO to process) an application. Confidentiality is governed by 35 U.S.C. 122 and 37 CFR 1.14. This collection is estimated to take 1 hour to complete, including gathering, preparing and submitting the completed application form to the USPTO. Time will vary depending upon the individual case. Any comments on the amount of time you require to complete this form and/or suggestions for reducing this burden, should be sent to the Chief Information Officer, U.S. Patent and Trademark Office, U.S. Department of Commerce, P.O. Box 1450, Alexandria, VA 22313-1450. DO NOT SEND FEES OR COMPLETED FORMS TO THIS ADDRESS. **SEND TO: Commissioner for Patents, P.O. Box 1450, Alexandria, VA 22313-1450.**

Privacy Act Statement

The Privacy Act of 1974 (P.L. 93-579) requires that you be given certain information in connection with your submission of the attached form related to a patent application or patent. Accordingly, pursuant to the requirements of the Act, please be advised that: (1) the general authority for the collection of this information is 35 U.S.C. 2(b)(2); (2) furnishing of the information solicited is voluntary; and (3) the principal purpose for which the information is used by the U.S. Patent and Trademark Office is to process and/or examine your submission related to a patent application or patent. If you do not furnish the requested information, the U.S. Patent and Trademark Office may not be able to process and/or examine your submission, which may result in termination of proceedings or abandonment of the application or expiration of the patent.

The information provided by you in this form will be subject to the following routine uses:

1. The information on this form will be treated confidentially to the extent allowed under the Freedom of Information Act (5 U.S.C. 552) and the Privacy Act (5 U.S.C. 552a). Records from this system of records may be disclosed to the Department of Justice to determine whether the Freedom of Information Act requires disclosure of these record s.

2. A record from this system of records may be disclosed, as a routine use, in the course of presenting evidence to a court, magistrate, or administrative tribunal, including disclosures to opposing counsel in the course of settlement negotiations.

3. A record in this system of records may be disclosed, as a routine use, to a Member of Congress submitting a request involving an individual, to whom the record pertains, when the individual has requested assistance from the Member with respect to the subject matter of the record.

4. A record in this system of records may be disclosed, as a routine use, to a contractor of the Agency having need for the information in order to perform a contract. Recipients of information shall be required to comply with the requirements of the Privacy Act of 1974, as amended, pursuant to 5 U.S.C. 552a(m).

5. A record related to an International Application filed under the Patent Cooperation Treaty in this system of records may be disclosed, as a routine use, to the International Bureau of the World Intellectual Property Organization, pursuant to the Patent Cooperation Treaty.

6. A record in this system of records may be disclosed, as a routine use, to another federal agency for purposes of National Security review (35 U.S.C. 181) and for review pursuant to the Atomic Energy Act (42 U.S.C. 218(c)).

7. A record from this system of records may be disclosed, as a routine use, to the Administrator, General Services, or his/her designee, during an inspection of records conducted by GSA as part of that agency's responsibility to recommend improvements in records management practices and programs, under authority of 44 U.S.C. 2904 and 2906. Such disclosure shall be made in accordance with the GSA regulations governing inspection of records for this purpose, and any other relevant (i.e., GSA or Commerce) directive. Such disclosure shall not be used to make determinations about individuals.

8. A record from this system of records may be disclosed, as a routine use, to the public after either publication of the application pursuant to 35 U.S.C. 122(b) or issuance of a patent pursuant to 35 U.S.C. 151. Further, a record may be disclosed, subject to the limitations of 37 CFR 1.14, as a routine use, to the public if the record was filed in an application which became abandoned or in which the proceedings were terminated and which application is referenced by either a published application, an application open to public inspections or an issued patent.

9. A record from this system of records may be disclosed, as a routine use, to a Federal, State, or local law enforcement agency, if the USPTO becomes aware of a violation or potential violation of law or regulation.

UNITED STATES
PATENT AND TRADEMARK OFFICE

P.O. Box 1450
Alexandria, VA 22313 - 1450
www.uspto.gov

ELECTRONIC ACKNOWLEDGEMENT RECEIPT

APPLICATION #	RECEIPT DATE / TIME	ATTORNEY DOCKET #
16/876,579	**11/17/2021 12:14:49 PM ET**	**066.0141X1C9**

Title of Invention

APPARATUS, SYSTEM, AND METHOD FOR MULTI-BITRATE CONTENT STREAMING

Application Information

APPLICATION TYPE	Utility - Nonprovisional Application under 35 USC 111(a)	PATENT #	-
CONFIRMATION #	3720	FILED BY	Francene Stewart
PATENT CENTER #	60403498	FILING DATE	05/18/2020
CUSTOMER #	70560	FIRST NAMED INVENTOR	DAVID F. BRUECK
CORRESPONDENCE ADDRESS	-	AUTHORIZED BY	Brett Carlson

Documents

TOTAL DOCUMENTS: 65

DOCUMENT	PAGES	DESCRIPTION	SIZE (KB)
20211117_IDS-NPLsList2_066-0141.pdf	6	Information Disclosure Statement (IDS) Form (SB08)	1011 KB
20211117_IDS-NPLsList3_066-0141.pdf	7	Information Disclosure Statement (IDS) Form (SB08)	1011 KB
20211117_IDSCertStmnt_066-0141.pdf	1	Transmittal Letter	123 KB
NPL4_BillGatesUnveils.pdf	7	Non Patent Literature	6820 KB
NPL5_DarwinStreamingServer.pdf	3	Non Patent Literature	2541 KB

NPL6_IBMGoesStraightToVideo.pdf	3	Non Patent Literature	3621 KB
NPL1_ANewAdaptive-Muntean.pdf	10	Non Patent Literature	3080 KB
NPL2_AkamaiBuysInterVu.pdf	3	Non Patent Literature	4054 KB
NPL3_AkamaiCompletesAcquisition.pdf	2	Non Patent Literature	3045 KB
NPL11_MacromediaDelivers.pdf	5	Non Patent Literature	8889 KB
NPL12_MacromediaFlash.pdf	2	Non Patent Literature	5290 KB
NPL13_MoveNetworks.pdf	3	Non Patent Literature	3493 KB
NPL7_IBMVideoCharger.pdf	2	Non Patent Literature	2272 KB
NPL8_IntelligentStreaming.pdf	5	Non Patent Literature	12677 KB
NPL9_InterVu&Excalibr.pdf	2	Non Patent Literature	453 KB
NPL19_SandpiperNetworksSignsPartnerDeals.pdf	2	Non Patent Literature	2298 KB
NPL16_RealNetwordsTestsG2.pdf	2	Non Patent Literature	2519 KB
NPL15_Rate-Distortion-Chou.pdf	10	Non Patent Literature	11502 KB
NPL18_RealSystemG2ProductionGuideBETA.pdf	130	Non Patent Literature	16108 KB
NPL17_RealNetworksProductionGuide.pdf	662	Non Patent Literature	15717 KB

NPL14_QuickTime6Summary.pdf	15	Non Patent Literature	22193 KB
NPL20_StreamingMediaDemystified-Pt3--.pdf	145	Non Patent Literature	16898 KB
NPL21_StreamingVideoFromEndToEnd.pdf	9	Non Patent Literature	15756 KB
NPL22_TheFallOfMoveNetworks.pdf	3	Non Patent Literature	4187 KB
NPL23_VideoCoding.pdf	13	Non Patent Literature	5349 KB
NPL20_StreamingMediaDemystified-Pt1--.pdf	200	Non Patent Literature	23606 KB
NPL20_StreamingMediaDemystified-Pt2--.pdf	200	Non Patent Literature	23321 KB
ExhibitA-5_DISH_564_156ClaimChart-Durrant.pdf	37	Non Patent Literature	382 KB
ExhibitA-6_DISH_564_156ClaimChart-Gentric.pdf	271	Non Patent Literature	1920 KB
ExhibitA-1_DISH_564_156ClaimChart-AkiyamaCombined.pdf	135	Non Patent Literature	1007 KB
ExhibitA-2_DISH_564_156ClaimChart-AryeUS20020002708A1.pdf	166	Non Patent Literature	1374 KB
ExhibitA-3_DISH_564_156ClaimChart-Carmel.pdf	163	Non Patent Literature	955 KB

ExhibitA-4_DISH_564_156ClaimChart-Chou_031.pdf	47	Non Patent Literature	489 KB
ExhibitA-11_DISH_564_156ClaimChart-QuickTimeChanges.pdf	25	Non Patent Literature	258 KB
ExhibitA-12_DISH_564_156ClaimChart-Quicktime.pdf	24	Non Patent Literature	236 KB
ExhibitA-13_DISH_564_156ClaimChart-RaviUS6292834.pdf	43	Non Patent Literature	559 KB
ExhibitA-7_DISH_564_156ClaimChart-KitamuraUnified3.pdf	154	Non Patent Literature	1055 KB
ExhibitA-8_DISH_564_156ClaimChart-Klemeis.pdf	95	Non Patent Literature	678 KB
ExhibitA-9_DISH_564_156ClaimChart-OplayoEP1298931.pdf	108	Non Patent Literature	737 KB
ExhibitA-10_DISH_564_156ClaimChart-QOAS.pdf	35	Non Patent Literature	9048 KB
ExhibitA-16_DISH_564_156ClaimChart-Wang_230.pdf	33	Non Patent Literature	348 KB
ExhibitA-17_DISH_564_156ClaimChart-Wu.pdf	41	Non Patent Literature	407 KB

ExhibitA-19_DISH_564_156ClaimChart-Microsoft-sjz.pdf	166	Non Patent Literature	1185 KB
ExhibitA-14_DISH_564_156ClaimChart-RealOnePlayer.pdf	59	Non Patent Literature	7125 KB
ExhibitA-15_DISH_564_156ClaimChart-Walker.pdf	60	Non Patent Literature	573 KB
ExhibitB-3_DISH_554_680_555ClaimChart-Carmel.pdf	385	Non Patent Literature	1523 KB
ExhibitB-4_DISH_554_680_555ClaimChart-Chou_031.pdf	64	Non Patent Literature	532 KB
ExhibitB-5_DISH_554_680_555ClaimChart-Durrant.pdf	57	Non Patent Literature	409 KB
ExhibitB-6_DISH_554_680_555ClaimChart-Gentric-Pt1.pdf	300	Non Patent Literature	2030 KB
ExhibitB-1_DISH_554_680_555ClaimChart-AkiyamaCombined.pdf	360	Non Patent Literature	2121 KB
ExhibitB-2_DISH_554_680_555ClaimChart-AryeUS20020002708.pdf	358	Non Patent Literature	1949 KB
ExhibitB-11_DISH_554ClaimChart-QuickTimeChanges.pdf	56	Non Patent Literature	394 KB

ExhibitB-9_DISH_554ClaimChart-OplayoEP1298931.pdf	279	Non Patent Literature	1487 KB
ExhibitB-8_DISH_554ClaimChart KlemetsFINAL.pdf	322	Non Patent Literature	2101 KB
ExhibitB-7_DISH_554_KitamuraUnified3.pdf	510	Non Patent Literature	2966 KB
ExhibitB-6_DISH_554_680_555ClaimChart-Gentric-Pt2.pdf	399	Non Patent Literature	2609 KB
ExhibitB-10_DISH_554ClaimChart-QOAS.pdf	60	Non Patent Literature	3298 KB
ExhibitB-13_DISH_554ClaiChart-RaviUS6292834.pdf	60	Non Patent Literature	492 KB
ExhibitB-14_DISH_554ClaimChart-RealOnePlayer.pdf	79	Non Patent Literature	4618 KB
ExhibitB-15_DISH_554ClaimChart-Walker.pdf	70	Non Patent Literature	538 KB
ExhibitB-12_DISH_554ClaimChart-Quicktime.pdf	55	Non Patent Literature	371 KB
ExhibitB-19_DISH_554ClaimChart-DeyFINAL.pdf	155	Non Patent Literature	1072 KB
ExhibitB-	503	Non Patent Literature	2312 KB

20_DISH_554ClaimChart-Microsoft-sjz.pdf			
ExhibitB-16_DISH_554ClaimChart-Wang_230.pdf	56	Non Patent Literature	407 KB
ExhibitB-17_DISH_554ClaimChart-Wu.pdf	60	Non Patent Literature	438 KB

Digest

DOCUMENT	MESSAGE DIGEST(SHA-512)
20211117_IDS-NPLsList2_066-0141.pdf	854BF895EA3B8A2F5961D49BAE1F4B743BAE19395FD5536E47F9AE8868222D909ABA834DD5DDA5623E00B8A817E044970C3D05F7921E2638AFD88CE1FCAEE66E
20211117_IDS-NPLsList3_066-0141.pdf	6A5982FC8E527632163811E5B1623B49AE138600004655994EAFD2F4093564581FB62BF8A67CF18E1ACC607CF590CBE3BDFD59AB11228675EE66FDDBFC367B89
20211117_IDSCertStmnt_066-0141.pdf	07A0E88561FB63F4A7493F23F0D2BB6169B63C641DF694023D487A53B8561C795F1381C0B1BB04A3E74D5746AC2D1F7317F17E29C08F1BE61057292B7BF22649
NPL4_BillGatesUnveils.pdf	5F54A1F958165499A2DF6E3EE590A4E394726FA2EC32DCFCDF90287E53F187AD96CFE43C5564F49EEA1427B5DE5BF022D8551D51B7D2D54680C785AFEE62B9B4
NPL5_DarwinStreamingServer.pdf	A733D906470ED0C1B442DBF2C7E1353B7D6C2BF8C67363770F5AC036CF9327EC447879D0957B9891F844CA3049749E9DEA615EB67C2178278DB38376BD5EFA39
NPL6_IBMGoesStraightToVideo.pdf	83D34840251CDB7E0F8D410B7E55781582D66E3BFB458E3363A49716AC70C507CA373FDE6B0B9590504D754C2AB6EB74CF4145E25F78E5A7C9B5D301BEDBE4B9

NPL1_ANewAdaptive-Muntean.pdf	3BFB0678A864A5C5E57AEDACA82F2D69733A929176D6F4066D518997AF36EF2C4A599EDDAFE6990BDE2B9CB228EF784A040E0159BAA2B66D843B3AC8F571CF8E
NPL2_AkamaiBuysInterVu.pdf	848EF1AA8834FF70B977790CC38E144F645CA0C25B8B0964E9C90E6C5AB87B0DA7B5456ABF9E85EEEAD4A51A8F3748CC6EC7753D7172038D447866CF56A6E46F
NPL3_AkamaiCompletesAcquisition.pdf	79C2F404DB20C64D35FC86A10018CF046066B214375B3C1A1C012FE62D046AE74ECB05976E362140F5E798F4B5215EA4D95BA440C2084E3CB44A4ACA385B38F2
NPL11_MacromediaDelivers.pdf	775D03038FF510FFB76380372B56CC4364ED3001DC3BD44AE9C670BAB487AF74FEA9625730BDAC1AE58BA7B21E6AB36BE2FCBE483B80F77C3D255BBDC28C5EC8
NPL12_MacromediaFlash.pdf	F253B3833B786F91229D91A63D12716CD55DC87DE13DE701962FD902A0285D7B0B675230EC1626AC9416C05E57965C11B1BB40F13384041747383D266046DD47
NPL13_MoveNetworks.pdf	61363A08F4E993BE2A3E14DD371F5EDAA9C50D35DE61F4862B394DA0B9628AC69CD5BEF61A52ECEE0DA724A4522CBABA3BF80BA8A4822EEF11FFB856AD523396
NPL7_IBMVideoCharger.pdf	C50CCF68903B4E70ACF15035E6925A2C0BEF30617FF7E5343B67B3EF05C695DE9D186A75A3456A2DB9F507BE6D36BBF676FCA6EE26863E36DAB960D079F4A95D
NPL8_IntelligentStreaming.pdf	ED03C0BCBD5EB402BDB89D55DBF13447376416CB249FE19F06F3282E41E6B6F62511FC16B80E656E53D5DA0CDBFA47D18ACF9468AD436502A9596F165438B312
NPL9_InterVu&Excalibr.pdf	3742162AEA43A686678C2D423442F7FD7BE5D0AE2C923FCEE4E814E9554D869E2C293FF08321B55D09293CCEFB4A05FE884AA8400C09E24D310159F61889AEED
NPL19_SandpiperNetworksSignsPartnerDeals.pdf	339E1AA5E6102030684A3FC756C67377F533AFF775F7629D51A7D11257FD0FB91BAB92C8807D0853A0BA7E8E17BBFCDBF810EC2899D12A5D511C5A60B1FF098D

NPL16_RealNetwordsTestsG2.pdf	ED49E1858F2459456F03BB072B767B7F55B58A111D69B53FACF9F365E5D71E0EE8FFFC647D7A8FF4C3364DE267C4BB00B8E7FBF2C08DEA533A22A68956795E3A
NPL15_Rate-Distortion-Chou.pdf	A72BAE22AF622E9B2975C3A0982D90915098E98475E778385D38BC4354395DF6D8B996E9442B55C79604F6740D187E59DA0386121D418ED47274C93E6649C622
NPL18_RealSystemG2ProductionGuideBETA.pdf	53CE983C4BFE9C6FF5E1243D108C20E4DCABE2512D79D8C3E68651CE1DF234574527695680A9093A36AEAF9CA8A2FD7A42C9A8F18CD95B3C8E597866F7E9C2AE
NPL17_RealNetworksProductionGuide.pdf	3DE682B005440D52DAB763D193F6DCDC61385121E092CF6F85F4DA48D05CE34286EF59599A890E689E849FC4B0CDE4CF707768B76C7D016F25F44EE8E397C4EA
NPL14_QuickTime6Summary.pdf	87D0AD63AA666239A5D5A70324E8E7AF29CB00F36664C4C4AA1527826378CB0ECA63B717344B6A92987E50FCDD7829A28E1CCBD5D8042F07A07B09F56D53242B
NPL20_StreamingMediaDemystified-Pt3--.pdf	9413E6AE2180CBF19B403708AE779CD24DF1B0760746F4075429A0579F66F272C545B5D74BAA33ABBE11F2D8FBDCF4CA32FCA10E7B708B7B0B2D61058BF9A7B9
NPL21_StreamingVideoFromEndToEnd.pdf	0C991B396D3B87BC11A53BD3B32C2C98A3FA64AA72C3A635B4067AD4CC9D9351E5431FEA124F4D1B4492AEE7DAFDAEE6865AD112491A4D2E351E9BEFAD2637C6
NPL22_TheFallOfMoveNetworks.pdf	96CF87387EE86B232A16B58456B86AC0886D9404E2AE02F0A5C75A67F8782C7C311A59E736312A6327FA94ECBEDFCC8051266BB08BC022DD6C3A147778E2165E
NPL23_VideoCoding.pdf	626BD92E7389A1371F3220A56BE5583F000B39EC3C745F8F023EE45753973C8F233A327DEE9B274EDC0AA62F3CDC4912A8B98507E7092F9D0CD6A324CF04E6C1
NPL20_StreamingMediaDemystified-Pt1--.pdf	174977178AC58A3E8003E2C9709060129B4A5CDA1B830146CA0FAFE5B9B3B17F38F196B63B1F765D77C74259A7B45E0E72E764B6382B525017365BF65C931BDA

NPL20_StreamingMediaDemystified-Pt2--.pdf	67CA298D24132BB540F2180BE64FAAC6A13BECE0527C918C16081AB3EC4027DE785768BA1B97A1966A1119ACBE9CB7C92F0DF2410D9A2F663574F02A2AA9144B
ExhibitA-5_DISH_564_156ClaimChart-Durrant.pdf	7D5BCCD7CBEBBEF3E91B04FC52E1A7FE93EF0DCDA28A555D6A791D16316A3B215D6E31104D31958404886ACD5D7394E5D1259E45AC70AFC1C2E42488068F1343
ExhibitA-6_DISH_564_156ClaimChart-Gentric.pdf	B081FAA3B5FC53804A9B924AF7251ECB5DC643948CA3797E672ED08932A7E4850ABD68E5E28DF6030202F6832D8B59137096F26A81D5F4FC0240F727D1FCDF3E
ExhibitA-1_DISH_564_156ClaimChart-AkiyamaCombined.pdf	0FC373A11356629E2C1C130E60C825DC4667B01C34BECF6E142D7917F2CC5AA5934E15524E761EB479703EE17DE14BD881B4CF6C319BA131F78E635E9DB09FD1
ExhibitA-2_DISH_564_156ClaimChart-AryeUS20020002708A1.pdf	931A8036146A307DCDE5E755D3708E7AB5F708D6C43B84C5397B4D5C6561F1678021278EC43FD43C7F6B96C61FF2C64C0F94B2D8ACEC3D2DF533352271CB6F0F
ExhibitA-3_DISH_564_156ClaimChart-Carmel.pdf	BB8AFDDF800063BAE94AB261793EA18BB33046B780576156F19D60DF9315897081D6B056FDF8B605DD6C1F05D15A76992E8337252A6B6BFA422C41A64BEABE77
ExhibitA-4_DISH_564_156ClaimChart-Chou_031.pdf	A88B70C4A4C4A341CE9AD659DC2DB1321936500064038754CB2DC9B1FAA81291063EDD4FC6CC4FC1C724392EAA7767D7D3349FCA9D06E41885760709B0CB5FA1
ExhibitA-11_DISH_564_156ClaimChart-QuickTimeChanges.pdf	10FCB5AB9D653030880BD4141768ACDB22491C69A43D4A42F774B8491223CD09E420213B6617C8A0A814C39A3B190E0CB0691C0F3579F5A76A46B15BE3A985C6
ExhibitA-12_DISH_564_156ClaimChart-Quicktime.pdf	E784792988309 4D05BD331EDA5F210B3DF81EF2CD3E26624F5F6E98BE3ABB57C6D89747975377A226644058F8D74A8B912F5E95856A19E807A9CBAE673685A3C
ExhibitA-13_DISH_564_156ClaimChart-RaviUS6292834.pdf	8A48AAD1E34D41E766151E719929A6B9B5691868C100B9BD5C95F6516F7D97BC124D904553F27B1E1BE4C2BDEBB6459D4B866EB77AB05384AB182258266322CA

ExhibitA-7_DISH_564_156ClaimChart-KitamuraUnified3.pdf	4D17BE7C3000A67AC1ECF60966332455F0619BCB544EAABCF820A22FAE72C8612130CD13F665BACA0D69E3912D655266354BBD64300ACF5B67F03F899E683933
ExhibitA-8_DISH_564_156ClaimChart-Klemets.pdf	A0176F636A431B55B1CFE929A2ECD3840C8635DFF0A1AA8565F7AB880016C4EABAA3163EAAB6738A9E8622707E183B9AAF1B22CC8BF1C35EE06BE714A5301F36
ExhibitA-9_DISH_564_156ClaimChart-OplayoEP1298931.pdf	FDF546CB65FA6F897254CE105F1DBEE15B04CD345AAAE118DE58ABF3BC9663CCF9DDE296A1820CEC702C8BBFFD9128FCB782FFBCEC4ACB474579D3688B18095E
ExhibitA-10_DISH_564_156ClaimChart-QOAS.pdf	523B02C910A4DC734271980B9772C27BD29E2829E14D771048BD728FFDB72DC5DC886D0B2E2A79C2D710AF1A9BF0F353DF7B2D2D23F6C5DF046519528ECCE4EE
ExhibitA-16_DISH_564_156ClaimChart-Wang_230.pdf	9CB2B846F54738D93D1F05ACD1BD53B07697C498F16A7B5846D2D24165C6D81B567869AC42CDC95CF151DC5847A534266A023E75B3699150CFDE7B8F36659F0B
ExhibitA-17_DISH_564_156ClaimChart-Wu.pdf	2BCC70BC4EEB77B5BE96B42FC2F1BABD64919B207E4C69CB1F7E431E4C52F15EE19D9ACCF8957FDD39F47CA960E5928043DE1CA21B4C737BEC7035761B72B319
ExhibitA-19_DISH_564_156ClaimChart-Microsoft-sjz.pdf	91DE4F2282E54DDF7422AD946EF1495A911AEFBFC66DB5B81A2F2BC03467D603A77577968CA5C45C3CAED60D97152DBD7FFE17D99B0A4642D6102D67B5EF04EF
ExhibitA-14_DISH_564_156ClaimChart-RealOnePlayer.pdf	77AA2DED5FECB3E037460777AE2732016D2EAA932FC6CA759357583370487F2DDFB81588AF49ADFE363586409E347C6528F92A05271F2D123A148D02EE70258C
ExhibitA-15_DISH_564_156ClaimChart-Walker.pdf	44880FB19A8B7A2DBCF0984DDDA71886F1E9ABFD239E5A2E1EF2D4732EBA79CA4A46C1135121548869151C96E446425560AD14E471DEE51DF3012FBC5038A92F
ExhibitB-3_DISH_554_680_555ClaimChart-Carmel.pdf	0F5ABB0218FEA5A89C28E64C0A101C475F8836CA655FE7879FF25BA8953102E3304C28FE487A3F702B0AD6F49DA5D8D1B10725C4FB6CBCD64966D58E54BA2D93

ExhibitB-4_DISH_554_680_555ClaimChart-Chou_031.pdf	995005FFE447F01CFED4DDE66AAFFA6698980414A969D6AA401A31DE2FB30D96E0590851C4471F9F272AA6A6EB5983E0EFB4817F8D4510FD063BDF1B1023CCBA
ExhibitB-5_DISH_554_680_555ClaimChart-Durrant.pdf	E9C6F529CEE992408DC3A977E5A66206BF833C5106357E7347577F515517D5CEFE2B4B1E42D68A436C1883F669604C3858DC027B209778F01816E270D322355B
ExhibitB-6_DISH_554_680_555ClaimChart-Gentric-Pt1.pdf	FC0F9C3497F879B5990FE728143AD4F7BF43A7C85D8DB8AEB51150E2C3F7BF3CF597175963520B75705E93FEE508988F8B583AB3FD30ABE00385D0033F7B9A75
ExhibitB-1_DISH_554_680_555ClaimChart-AkiyamaCombined.pdf	EEE81B365D70225FCB5B19A496FB6FEC01B0D0B7DA1F3F9F564D41DC30A50AB7D83E4BBA495256082BB4D1182074E3363E47B12B93AAA9377F92990349619383
ExhibitB-2_DISH_554_680_555ClaimChart-AryeUS20020002708.pdf	91EF04ECB28E7A5774B852D2FECF50CD64EBD94C7D607754FC515E2B222D563D4335714759A7C5C77C69AD47F5B7BD69991DEAF878DB25B9FE51178E9455D92D
ExhibitB-11_DISH_554ClaimChart-QuickTimeChanges.pdf	D11DB8DD3D975BF1A23C07D75579E1204DFBB182F306EED3EC3EE2E13003625E0B3B92AAF16FA15BB6E889D8E7D452D263E73B3D6FAA82916F642CF8ACC52D6E
ExhibitB-9_DISH_554ClaimChart-OplayoEP1298931.pdf	7F7B00478AC3A7391852D0C454F7F6D07335EFA3C472B107C61A11DC2E01E0998F94BC50EEF2D613C70FDACDC75522D496DB480C65E3181F0617C756CDD47C14
ExhibitB-8_DISH_554ClaimChart KlemetsFINAL.pdf	A090303A604A80F5D62CBB96D61A7F7F5CA62E34AD58FA95D7C2E67831C78093A32B517CE25286CDB0B4342B10E44960E6E92282F4E00C50BEC5E02AAA5023E8
ExhibitB-7_DISH_554_KitamuraUnified3.pdf	B23FCAFB3F2D66857FE9C228121A51DDBE6B70065FB386B83ECA0645DC81419195A0FF87C3FDD83F4C62F8908B5FA0A4F9C51424B7277A42D13D72517E086A3A
ExhibitB-6_DISH_554_680_555ClaimChart-Gentric-Pt2.pdf	CFBEC3CFB0C48BB71612B5667DDD4AD6030D818179A6F9BA87CA425AB86D0BA16975B0B25C2F1F2D4E45DD0B2876A5012F9E9C09276EC545F57F119476980 9B7

ExhibitB-10_DISH_554ClaimChart-QOAS.pdf	5B33781086CDC22AFDE2F0705C3DC1E5600E871B0D437AB5299AE77A562B5CFDF88AA6B56CC9ECCCB88050C08DDAAAC15F3A2BFF13116CCF2FE553EC1C56CE19
ExhibitB-13_DISH_554ClaiChart-RaviUS6292834.pdf	3D754E56463F5650D57C6B66867D8DBB218C0F93B6E4E510C1039D6A13825361F838C25541F7A6B75D2C4A2AC9A48A58A191A638361EFAF4C93F76213000B8AD
ExhibitB-14_DISH_554ClaimChart-RealOnePlayer.pdf	074EAB06A4AE58E14E944E1B2CB30BAC1F145BF30EEAB5A553FACBA4AD022324E470AF48C674ACB4FFD08FDAE864B37951C51FAC19894305A9ADE89048EF587B
ExhibitB-15_DISH_554ClaimChart-Walker.pdf	42A1A5F06B4B26530EA87838D527E09626BE9997F018C15D62C5F68C5D264A92818E68DACF909A67391911F0C052FE4684BABD169A5E4561152FF3F617686857
ExhibitB-12_DISH_554ClaimChart-Quicktime.pdf	DABE9A2A5A04A2B23BDADF31277402D1C678B5A12529D922EA4606814AACACE8AF37D61393A3D30BAC02276FB93B3B9DEBCCB5C74A143A20015D6E89BBB803E1
ExhibitB-19_DISH_554ClaimChart-DeyFINAL.pdf	EC8B2B8F00F14B830208AC063C62E77E18B1A46CE564912F5C3A5DC93353382975CF8F95251D84604DADE52592C5CF6D3A622F409088EF6E387434FA695F3C81
ExhibitB-20_DISH_554ClaimChart-Microsoft-sjz.pdf	BD5794CD9583512760CB915E457B14C99CA3B4C5616AB40F92ECBFA7C9093DC5769C449966AAD7B9346F2695E88D8F7A8810D1D9E1E905562413433D2B757047
ExhibitB-16_DISH_554ClaimChart-Wang_230.pdf	46BCFAFF47C89E9ED597A909EF687786D97B0D0494027C72DC6684B948AE1CA79BD44F6D7BFB7939BDD6C9952CB7A1D86C40BCEF4635E3F690E77CBC62BD8976
ExhibitB-17_DISH_554ClaimChart-Wu.pdf	32ACE078B1E886EEE25120CE351618C976B07A190872380174FA949FAE39FDFE6B0124631A812B3AB16B4F9DF622D0960505E8D9B9590E66E1BF0EA2F86236E6

This Acknowledgement Receipt evidences receipt on the noted date by the USPTO of the indicated documents, characterized by the applicant, and including page counts, where applicable. It serves as evidence of receipt similar to a Post Card, as described in MPEP 503.

New Applications Under 35 U.S.C. 111

If a new application is being filed and the application includes the necessary components for filing date (see 37 CFR 1.53(b)-(d) and MPEP 506), a Filing Receipt (37 CFR 1.54) will be issued in due course and the date shown on this Acknowledgement Receipt will establish the filing date of the application

National Stage of an International Application under 35 U.S.C. 371

If a timely submission to enter the national stage of an international application is compliant with the conditions of 35 U.S.C. 371 and other applicable requirements a Form PCT/DO/EO/903 indicating acceptance of the application as a national stage submission under 35 U.S.C. 371 will be issued in addition to the Filing Receipt, in due course.

New International Application Filed with the USPTO as a Receiving Office

If a new international application is being filed and the international application includes the necessary components for an international filing date (see PCT Article 11 and MPEP 1810), a Notification of the International Application Number and of the International Filing Date (Form PCT/RO/105) will be issued in due course, subject to prescriptions concerning national security, and the date shown on this Acknowledgement Receipt will establish the international filing date of the application.

IDS CERTIFICATION STATEMENTS

I. THIS IDS IS BEING FILED UNDER 37 C.F.R. 1.97(b): (check one box)

- ☐ Within three months of the filing date of a national application other than a continued prosecution application under 1.53(d).
- ☐ Within three months of the date of entry of the national stage as set forth in 1.491 in an international application.
- ☐ Before the mailing date of a first Office Action on the merits. In the event that a first Office Action on the merits has been mailed, please consider this IDS under 37 C.F.R. 1.97(c) and see the statement under 1.97(e) **or** charge deposit account 50-2091 the fee specified by 37 C.F.R. 1.17(p) if such statement is not selected in Section IV.
- ☑ Before the mailing of a first Office Action after the filing of a request for continued examination under 1.114.

II. THIS IDS IS BEING FILED UNDER 37 C.F.R. 1.97(c):

- ☐ After the period specified in 37 C.F.R. 1.97(b) and before the mailing date of any of a final action under 1.113, a notice of allowance under 1.311 or an action that otherwise closes prosecution in the application, and accompanied by:
  - ☐ a statement specified in 1.97(e) as subsequently provided in this IDS; or
  - ☐ the fee set forth in 1.17(p).

III. THIS IDS IS BEING FILED UNDER 37 C.F.R. 1.97(d):

- ☐ After the period specified in 37 C.F.R. 1.97(c) and on or after the mailing date of any of a final action under 1.113, a notice of allowance under 1.311 or an action that otherwise closes prosecution in the application, but before or simultaneous with payment of the issue fee, and accompanied by a statement specified in 1.97(e) as subsequently provided in this IDS **and** the fee set forth in 1.17(p).

IV. Statement under 37 C.F.R. 1.97(e) (check only one box)

The undersigned hereby states that:

- ☐ Each item of information contained in the IDS was first cited in any communication from a foreign patent office in a counterpart foreign application not more than three months prior to the filing of this IDS.
- ☐ No item of information contained in the IDS was cited in a communication from a foreign patent office in a counterpart foreign application, and, to knowledge of the person signing the certification after making reasonable inquiry, no item of information contained in the IDS was known to any individual designated in 37 C.F.R. 1.56(c) more than three months prior to the filing of this IDS.

V. Statement under 37 C.F.R. §1.704(d):

- ☐ The undersigned hereby states that each item of information contained in the information disclosure statement: (i) was first cited in any communication from a patent office in a counterpart foreign or international application or from the Office, and this communication was not received by any individual designated in § 1.56(c) more than thirty days prior to the filing of the information disclosure statement; or (ii) is a communication that was issued by a patent office in a counterpart foreign or international application or by the Office, and this communication was not received by any individual designated in § 1.56(c) more than thirty days prior to the filing of the information disclosure statement..

VI. CONCLUSION

It is respectfully submitted that the claims presently on file patently distinguish the present invention from each of the references cited in this IDS. The references cited in this IDS are being cited only in the interest of candor and without any admission that they constitute statutory prior art or contain matter which anticipates the invention or which would render the same obvious, either singly or in a combination, to a person of ordinary skill in the art. Furthermore the filing of this IDS should not be construed to be an admission that the information cited in this IDS is, or is considered to be, material to patentability as defined in 1.56(b). In addition, the filing of this IDS should not be construed as a representation that a search has been made.

If the Examiner has any questions concerning this IDS, the Examiner is requested to contact the undersigned at the telephone number associated with Customer No. 70560 . If it is determined that this IDS has been filed under the wrong rule, the PTO is requested to consider this IDS under the proper rule, with a petition if necessary, and charge the appropriate fee to Deposit Account No. 50-2091.

UNITED STATES PATENT AND TRADEMARK OFFICE

UNITED STATES DEPARTMENT OF COMMERCE
United States Patent and Trademark Office
Address: COMMISSIONER FOR PATENTS
P.O. Box 1450
Alexandria, Virginia 22313-1450
www.uspto.gov

NOTICE OF ALLOWANCE AND FEE(S) DUE

70560 7590 01/05/2022
LKGLOBAL (Dish Technologies L.L.C.)
7010 E. COCHISE ROAD
SCOTTSDALE, AZ 85253

EXAMINER
PATEL, CHIRAG R

ART UNIT	PAPER NUMBER
2454	

DATE MAILED: 01/05/2022

APPLICATION NO.	FILING DATE	FIRST NAMED INVENTOR	ATTORNEY DOCKET NO.	CONFIRMATION NO.
16/876,579	05/18/2020	DAVID F. BRUECK	066.0141X1C9	3720

TITLE OF INVENTION: APPARATUS, SYSTEM, AND METHOD FOR MULTI-BITRATE CONTENT STREAMING

APPLN. TYPE	ENTITY STATUS	ISSUE FEE DUE	PUBLICATION FEE DUE	PREV. PAID ISSUE FEE	TOTAL FEE(S) DUE	DATE DUE
nonprovisional	UNDISCOUNTED	$1200	$0.00	$0.00	$1200	04/05/2022

THE APPLICATION IDENTIFIED ABOVE HAS BEEN EXAMINED AND IS ALLOWED FOR ISSUANCE AS A PATENT. PROSECUTION ON THE MERITS IS CLOSED. THIS NOTICE OF ALLOWANCE IS NOT A GRANT OF PATENT RIGHTS. THIS APPLICATION IS SUBJECT TO WITHDRAWAL FROM ISSUE AT THE INITIATIVE OF THE OFFICE OR UPON PETITION BY THE APPLICANT. SEE 37 CFR 1.313 AND MPEP 1308.

THE ISSUE FEE AND PUBLICATION FEE (IF REQUIRED) MUST BE PAID WITHIN THREE MONTHS FROM THE MAILING DATE OF THIS NOTICE OR THIS APPLICATION SHALL BE REGARDED AS ABANDONED. THIS STATUTORY PERIOD CANNOT BE EXTENDED. SEE 35 U.S.C. 151. THE ISSUE FEE DUE INDICATED ABOVE DOES NOT REFLECT A CREDIT FOR ANY PREVIOUSLY PAID ISSUE FEE IN THIS APPLICATION. IF AN ISSUE FEE HAS PREVIOUSLY BEEN PAID IN THIS APPLICATION (AS SHOWN ABOVE), THE RETURN OF PART B OF THIS FORM WILL BE CONSIDERED A REQUEST TO REAPPLY THE PREVIOUSLY PAID ISSUE FEE TOWARD THE ISSUE FEE NOW DUE.

HOW TO REPLY TO THIS NOTICE:

I. Review the ENTITY STATUS shown above. If the ENTITY STATUS is shown as SMALL or MICRO, verify whether entitlement to that entity status still applies.

If the ENTITY STATUS is the same as shown above, pay the TOTAL FEE(S) DUE shown above.

If the ENTITY STATUS is changed from that shown above, on PART B - FEE(S) TRANSMITTAL, complete section number 5 titled "Change in Entity Status (from status indicated above)".

For purposes of this notice, small entity fees are 1/2 the amount of undiscounted fees, and micro entity fees are 1/2 the amount of small entity fees.

II. PART B - FEE(S) TRANSMITTAL, or its equivalent, must be completed and returned to the United States Patent and Trademark Office (USPTO) with your ISSUE FEE and PUBLICATION FEE (if required). If you are charging the fee(s) to your deposit account, section "4b" of Part B - Fee(s) Transmittal should be completed. If an equivalent of Part B is filed, a request to reapply a previously paid issue fee must be clearly made, and delays in processing may occur due to the difficulty in recognizing the paper as an equivalent of Part B.

III. All communications regarding this application must give the application number. Please direct all communications prior to issuance to Mail Stop ISSUE FEE unless advised to the contrary.

IMPORTANT REMINDER: Maintenance fees are due in utility patents issuing on applications filed on or after Dec. 12, 1980. It is patentee's responsibility to ensure timely payment of maintenance fees when due. More information is available at www.uspto.gov/PatentMaintenanceFees.

DISH EXHIBIT 2002, Page 1180
Aylo Freesites Ltd. v. Dish Technologies L.L.C.
IPR2024-00047

PART B - FEE(S) TRANSMITTAL

Complete and send this form, together with applicable fee(s), by mail or fax, or via EFS-Web.

By mail, send to: Mail Stop ISSUE FEE
Commissioner for Patents
P.O. Box 1450
Alexandria, Virginia 22313-1450

By fax, send to: (571)-273-2885

INSTRUCTIONS: This form should be used for transmitting the ISSUE FEE and PUBLICATION FEE (if required). Blocks 1 through 5 should be completed where appropriate. All further correspondence including the Patent, advance orders and notification of maintenance fees will be mailed to the current correspondence address as indicated unless corrected below or directed otherwise in Block 1, by (a) specifying a new correspondence address; and/or (b) indicating a separate "FEE ADDRESS" for maintenance fee notifications.

CURRENT CORRESPONDENCE ADDRESS (Note: Use Block 1 for any change of address)

70560 7590 01/05/2022
LKGLOBAL (Dish Technologies L.L.C.)
7010 E. COCHISE ROAD
SCOTTSDALE, AZ 85253

Note: A certificate of mailing can only be used for domestic mailings of the Fee(s) Transmittal. This certificate cannot be used for any other accompanying papers. Each additional paper, such as an assignment or formal drawing, must have its own certificate of mailing or transmission.

Certificate of Mailing or Transmission

I hereby certify that this Fee(s) Transmittal is being deposited with the United States Postal Service with sufficient postage for first class mail in an envelope addressed to the Mail Stop ISSUE FEE address above, or being transmitted to the USPTO via EFS-Web or by facsimile to (571) 273-2885, on the date below.

(Typed or printed name)

(Signature)

(Date)

APPLICATION NO.	FILING DATE	FIRST NAMED INVENTOR	ATTORNEY DOCKET NO.	CONFIRMATION NO.
16/876,579	05/18/2020	DAVID F. BRUECK	066.0141X1C9	3720

TITLE OF INVENTION: APPARATUS, SYSTEM, AND METHOD FOR MULTI-BITRATE CONTENT STREAMING

APPLN. TYPE	ENTITY STATUS	ISSUE FEE DUE	PUBLICATION FEE DUE	PREV. PAID ISSUE FEE	TOTAL FEE(S) DUE	DATE DUE
nonprovisional	UNDISCOUNTED	$1200	$0.00	$0.00	$1200	04/05/2022

EXAMINER	ART UNIT	CLASS-SUBCLASS
PATEL, CHIRAG R	2454	709-219000

1. Change of correspondence address or indication of "Fee Address" (37 CFR 1.363).

❑ Change of correspondence address (or Change of Correspondence Address form PTO/AIA/122 or PTO/SB/122) attached.

❑ "Fee Address" indication (or "Fee Address" Indication form PTO/AIA/47 or PTO/SB/47; Rev 03-02 or more recent) attached. **Use of a Customer Number is required.**

2. For printing on the patent front page, list
(1) The names of up to 3 registered patent attorneys or agents OR, alternatively,
(2) The name of a single firm (having as a member a registered attorney or agent) and the names of up to 2 registered patent attorneys or agents. If no name is listed, no name will be printed.

1_____
2_____
3_____

3. ASSIGNEE NAME AND RESIDENCE DATA TO BE PRINTED ON THE PATENT (print or type)

PLEASE NOTE: Unless an assignee is identified below, no assignee data will appear on the patent. If an assignee is identified below, the document must have been previously recorded, or filed for recordation, as set forth in 37 CFR 3.11 and 37 CFR 3.81(a). Completion of this form is NOT a substitute for filing an assignment.

(A) NAME OF ASSIGNEE (B) RESIDENCE: (CITY and STATE OR COUNTRY)

Please check the appropriate assignee category or categories (will not be printed on the patent) : ❑ Individual ❑ Corporation or other private group entity ❑ Government

4a. Fees submitted: ❑Issue Fee ❑Publication Fee (if required) ❑Advance Order - # of Copies _____

4b. Method of Payment: *(Please first reapply any previously paid fee shown above)*

❑ Electronic Payment via EFS-Web ❑ Enclosed check ❑ Non-electronic payment by credit card (Attach form PTO-2038)

❑ The Director is hereby authorized to charge the required fee(s), any deficiency, or credit any overpayment to Deposit Account No. _____

5. **Change in Entity Status** (from status indicated above)

❑ Applicant certifying micro entity status. See 37 CFR 1.29

❑ Applicant asserting small entity status. See 37 CFR 1.27

❑ Applicant changing to regular undiscounted fee status.

NOTE: Absent a valid certification of Micro Entity Status (see forms PTO/SB/15A and 15B), issue fee payment in the micro entity amount will not be accepted at the risk of application abandonment.
NOTE: If the application was previously under micro entity status, checking this box will be taken to be a notification of loss of entitlement to micro entity status.
NOTE: Checking this box will be taken to be a notification of loss of entitlement to small or micro entity status, as applicable.

NOTE: This form must be signed in accordance with 37 CFR 1.31 and 1.33. See 37 CFR 1.4 for signature requirements and certifications.

Authorized Signature _____ Date _____

Typed or printed name _____ Registration No. _____

DISH EXHIBIT 2002, Page 1181
Avio Freesites Ltd. v. Dish Technologies L.L.C.
IPR2024-00047

UNITED STATES DEPARTMENT OF COMMERCE
United States Patent and Trademark Office
Address: COMMISSIONER FOR PATENTS
P.O. Box 1450
Alexandria, Virginia 22313-1450
www.uspto.gov

APPLICATION NO.	FILING DATE	FIRST NAMED INVENTOR	ATTORNEY DOCKET NO.	CONFIRMATION NO.
16/876,579	05/18/2020	DAVID F. BRUECK	066.0141X1C9	3720

70560 7590 01/05/2022
LKGLOBAL (Dish Technologies L.L.C.)
7010 E. COCHISE ROAD
SCOTTSDALE, AZ 85253

EXAMINER
PATEL, CHIRAG R

ART UNIT	PAPER NUMBER
2454	

DATE MAILED: 01/05/2022

Determination of Patent Term Adjustment under 35 U.S.C. 154 (b)
(Applications filed on or after May 29, 2000)

The Office has discontinued providing a Patent Term Adjustment (PTA) calculation with the Notice of Allowance.

Section 1(h)(2) of the AIA Technical Corrections Act amended 35 U.S.C. 154(b)(3)(B)(i) to eliminate the requirement that the Office provide a patent term adjustment determination with the notice of allowance. See Revisions to Patent Term Adjustment, 78 Fed. Reg. 19416, 19417 (Apr. 1, 2013). Therefore, the Office is no longer providing an initial patent term adjustment determination with the notice of allowance. The Office will continue to provide a patent term adjustment determination with the Issue Notification Letter that is mailed to applicant approximately three weeks prior to the issue date of the patent, and will include the patent term adjustment on the patent. Any request for reconsideration of the patent term adjustment determination (or reinstatement of patent term adjustment) should follow the process outlined in 37 CFR 1.705.

Any questions regarding the Patent Term Extension or Adjustment determination should be directed to the Office of Patent Legal Administration at (571)-272-7702. Questions relating to issue and publication fee payments should be directed to the Customer Service Center of the Office of Patent Publication at 1-(888)-786-0101 or (571)-272-4200.

DISH EXHIBIT 2002, Page 1182
Aylo Freesites Ltd. v. Dish Technologies L.L.C.
IPR2024-00047

OMB Clearance and PRA Burden Statement for PTOL-85 Part B

The Paperwork Reduction Act (PRA) of 1995 requires Federal agencies to obtain Office of Management and Budget approval before requesting most types of information from the public. When OMB approves an agency request to collect information from the public, OMB (i) provides a valid OMB Control Number and expiration date for the agency to display on the instrument that will be used to collect the information and (ii) requires the agency to inform the public about the OMB Control Number's legal significance in accordance with 5 CFR 1320.5(b).

The information collected by PTOL-85 Part B is required by 37 CFR 1.311. The information is required to obtain or retain a benefit by the public which is to file (and by the USPTO to process) an application. Confidentiality is governed by 35 U.S.C. 122 and 37 CFR 1.14. This collection is estimated to take 30 minutes to complete, including gathering, preparing, and submitting the completed application form to the USPTO. Time will vary depending upon the individual case. Any comments on the amount of time you require to complete this form and/or suggestions for reducing this burden, should be sent to the Chief Information Officer, U.S. Patent and Trademark Office, U.S. Department of Commerce, P.O. Box 1450, Alexandria, Virginia 22313-1450. DO NOT SEND FEES OR COMPLETED FORMS TO THIS ADDRESS. SEND TO: Commissioner for Patents, P.O. Box 1450, Alexandria, Virginia 22313-1450. Under the Paperwork Reduction Act of 1995, no persons are required to respond to a collection of information unless it displays a valid OMB control number.

Privacy Act Statement

The Privacy Act of 1974 (P.L. 93-579) requires that you be given certain information in connection with your submission of the attached form related to a patent application or patent. Accordingly, pursuant to the requirements of the Act, please be advised that: (1) the general authority for the collection of this information is 35 U.S.C. 2(b)(2); (2) furnishing of the information solicited is voluntary; and (3) the principal purpose for which the information is used by the U.S. Patent and Trademark Office is to process and/or examine your submission related to a patent application or patent. If you do not furnish the requested information, the U.S. Patent and Trademark Office may not be able to process and/or examine your submission, which may result in termination of proceedings or abandonment of the application or expiration of the patent.

The information provided by you in this form will be subject to the following routine uses:

1. The information on this form will be treated confidentially to the extent allowed under the Freedom of Information Act (5 U.S.C. 552) and the Privacy Act (5 U.S.C 552a). Records from this system of records may be disclosed to the Department of Justice to determine whether disclosure of these records is required by the Freedom of Information Act.
2. A record from this system of records may be disclosed, as a routine use, in the course of presenting evidence to a court, magistrate, or administrative tribunal, including disclosures to opposing counsel in the course of settlement negotiations.
3. A record in this system of records may be disclosed, as a routine use, to a Member of Congress submitting a request involving an individual, to whom the record pertains, when the individual has requested assistance from the Member with respect to the subject matter of the record.
4. A record in this system of records may be disclosed, as a routine use, to a contractor of the Agency having need for the information in order to perform a contract. Recipients of information shall be required to comply with the requirements of the Privacy Act of 1974, as amended, pursuant to 5 U.S.C. 552a(m).
5. A record related to an International Application filed under the Patent Cooperation Treaty in this system of records may be disclosed, as a routine use, to the International Bureau of the World Intellectual Property Organization, pursuant to the Patent Cooperation Treaty.
6. A record in this system of records may be disclosed, as a routine use, to another federal agency for purposes of National Security review (35 U.S.C. 181) and for review pursuant to the Atomic Energy Act (42 U.S.C. 218(c)).
7. A record from this system of records may be disclosed, as a routine use, to the Administrator, General Services, or his/her designee, during an inspection of records conducted by GSA as part of that agency's responsibility to recommend improvements in records management practices and programs, under authority of 44 U.S.C. 2904 and 2906. Such disclosure shall be made in accordance with the GSA regulations governing inspection of records for this purpose, and any other relevant (i.e., GSA or Commerce) directive. Such disclosure shall not be used to make determinations about individuals.
8. A record from this system of records may be disclosed, as a routine use, to the public after either publication of the application pursuant to 35 U.S.C. 122(b) or issuance of a patent pursuant to 35 U.S.C. 151. Further, a record may be disclosed, subject to the limitations of 37 CFR 1.14, as a routine use, to the public if the record was filed in an application which became abandoned or in which the proceedings were terminated and which application is referenced by either a published application, an application open to public inspection or an issued patent.
9. A record from this system of records may be disclosed, as a routine use, to a Federal, State, or local law enforcement agency, if the USPTO becomes aware of a violation or potential violation of law or regulation.

Notice of Allowability	Application No. 16/876,579	Applicant(s) BRUECK et al.	
	Examiner CHIRAG R PATEL	Art Unit 2454	AIA (FITF) Status No

-- The MAILING DATE of this communication appears on the cover sheet with the correspondence address--

All claims being allowable, PROSECUTION ON THE MERITS IS (OR REMAINS) CLOSED in this application. If not included herewith (or previously mailed), a Notice of Allowance (PTOL-85) or other appropriate communication will be mailed in due course. **THIS NOTICE OF ALLOWABILITY IS NOT A GRANT OF PATENT RIGHTS.** This application is subject to withdrawal from issue at the initiative of the Office or upon petition by the applicant. See 37 CFR 1.313 and MPEP 1308.

1. ☑ This communication is responsive to the amendment filed on November 17, 2021.
   ☐ A declaration(s)/affidavit(s) under **37 CFR 1.130(b)** was/were filed on _____.

2. ☐ An election was made by the applicant in response to a restriction requirement set forth during the interview on _____; the restriction requirement and election have been incorporated into this action.

3. ☑ The allowed claim(s) is/are 1-30 . As a result of the allowed claim(s), you may be eligible to benefit from the **Patent Prosecution Highway** program at a participating intellectual property office for the corresponding application. For more information, please see **http://www.uspto.gov/patents/init_events/pph/index.jsp** or send an inquiry to **PPHfeedback@uspto.gov.**

4. ☐ Acknowledgment is made of a claim for foreign priority under 35 U.S.C. § 119(a)-(d) or (f).

   Certified copies:

   a) ☐ All b) ☐ Some* c) ☐ None of the:

   1. ☐ Certified copies of the priority documents have been received.
   2. ☐ Certified copies of the priority documents have been received in Application No. _____ .
   3. ☐ Copies of the certified copies of the priority documents have been received in this national stage application from the International Bureau (PCT Rule 17.2(a)).

   * Certified copies not received: _____ .

Applicant has THREE MONTHS FROM THE "MAILING DATE" of this communication to file a reply complying with the requirements noted below. Failure to timely comply will result in ABANDONMENT of this application.
THIS THREE-MONTH PERIOD IS NOT EXTENDABLE.

5. ☐ CORRECTED DRAWINGS (as "replacement sheets") must be submitted.
   ☐ including changes required by the attached Examiner's Amendment / Comment or in the Office action of Paper No./Mail Date _____ .

   Identifying indicia such as the application number (see 37 CFR 1.84(c)) should be written on the drawings in the front (not the back) of each sheet. Replacement sheet(s) should be labeled as such in the header according to 37 CFR 1.121(d).

6. ☐ DEPOSIT OF and/or INFORMATION about the deposit of BIOLOGICAL MATERIAL must be submitted. Note the attached Examiner's comment regarding REQUIREMENT FOR THE DEPOSIT OF BIOLOGICAL MATERIAL.

Attachment(s)

1. ☐ Notice of References Cited (PTO-892)
2. ☑ Information Disclosure Statements (PTO/SB/08), Paper No./Mail Date 11/17/21, 11/17/21, 11/17/21, 11/17/21.
3. ☐ Examiner's Comment Regarding Requirement for Deposit of Biological Material _____.
4. ☐ Interview Summary (PTO-413), Paper No./Mail Date. _____.
5. ☐ Examiner's Amendment/Comment
6. ☑ Examiner's Statement of Reasons for Allowance
7. ☐ Other _____.

/CHIRAG R PATEL/
Primary Examiner, Art Unit 2454

DISH EXHIBIT 2002, Page 1184
Aylo Freesites Ltd. v. Dish Technologies L.L.C.
IPR2024-00047

Notice of Pre-AIA or AIA Status

The present application is being examined under the pre-AIA first to invent provisions.

Allowable Subject Matter

Claims 1-30 are allowed.

The following is an examiner's statement of reasons for allowance: Applicants have filed a terminal disclaimer to overcome the obvious double patent rejections with respect to US 10,469,555. A relevant prior art, Grigorovitch et al. (US 2005/0066063) teaches that a single file stores a portion of a video stream and audio stream in multiple bit-rates as performing multi-bit-rate encoding and are selected based on a bandwidth. It also teaches that the media cache will create a segment for each portion of the received stream that is not immediately adjacent in time, when the user uses a seek bar to forward or rewind the playback media. Srivara (US 2003/0204519) stores the entire song in multiple bit-rate encoding files and transmit the entire file in a single bit-rate in accordance with the quality selection. The prior art are different from the claimed invention in that the each streamlet correspond to a portion of a video, and is encoded at a response one of the plurality of different bitrate and refers to the same portion of the video in the low stream, medium quality and high-quality stream and transmit only that portion which has the same duration at the at the requested bitrate for playback as requested, as claimed.

Any comments considered necessary by applicant must be submitted no later than the payment of the issue fee and, to avoid processing delays, should preferably accompany the issue fee. Such submissions should be clearly labeled "Comments on Statement of Reasons for Allowance."

Conclusion

Any inquiry concerning this communication or earlier communications from the examiner should be directed to Chirag R Patel whose telephone number is (571)272-7966. The examiner can normally be reached on Monday to Friday from 8:00AM to 4:30PM. If attempts to reach the examiner by telephone are unsuccessful, the examiner's supervisor, Glenton Burgess, can be reached on 571-272-3949. The fax phone number for the organization where this application or proceeding is assigned is 571-273-8300.

Information regarding the status of an application may be obtained from the Patent Application Information Retrieval (PAIR) system. Status information for published applications may be obtained from either Private PAIR or Public PAIR. Status information for unpublished applications is available through Private PAIR only. For more information about the PAIR system, see http://pairdirect.uspto.gov. Should you have questions on access to the Private PAIR system, contact the Electronic Business Center (EBC) at 866-217-9197 (toll free).

/Chirag R Patel/
Primary Examiner, Art Unit 2454

Index of Claims	Application/Control No.	Applicant(s)/Patent Under Reexamination
	16/876,579	BRUECK et al.
	Examiner	**Art Unit**
	CHIRAG R PATEL	2454

✓	Rejected	-	Cancelled	N	Non-Elected	A	Appeal
=	Allowed	÷	Restricted	I	Interference	O	Objected

CLAIMS

☑ Claims renumbered in the same order as presented by applicant ☐ CPA ☑ T.D. ☐ R.1.47

CLAIM		DATE								
Final	Original	06/12/2020	09/10/2021	12/15/2021						
	1	✓	=	=						
	2	✓	=	=						
	3	✓	=	=						
	4	✓	=	=						
	5	✓	=	=						
	6	✓	=	=						
	7	✓	=	=						
	8	✓	=	=						
	9	✓	=	=						
	10	✓	=	=						
	11	✓	=	=						
	12	✓	=	=						
	13	✓	=	=						
	14	✓	=	=						
	15	✓	=	=						
	16	✓	=	=						
	17	✓	=	=						
	18	✓	=	=						
	19	✓	=	=						
	20	✓	=	=						
	21	✓	=	=						
	22	✓	=	=						
	23	✓	=	=						
	24	✓	=	=						
	25	✓	=	=						
	26	✓	=	=						
	27	✓	=	=						
	28	✓	=	=						
	29	✓	=	=						
	30	✓	=	=						

Issue Classification	Application/Control No.	Applicant(s)/Patent Under Reexamination
	16/876,579	BRUECK et al.
	Examiner	**Art Unit**
	CHIRAG R PATEL	2454

CPC

Symbol					Type	Version
H04L	/	65	/	607	F	2013-01-01
H04L	/	47	/	801	I	2013-01-01
H04L	/	47	/	12	I	2013-01-01
H04L	/	65	/	4069	I	2013-01-01
G06F	/	16	/	71	I	2019-01-01
G06F	/	16	/	183	I	2019-01-01
H04L	/	29	/	06027	I	2013-01-01
H04N	/	7	/	24	I	2013-01-01
H04N	/	21	/	23439	I	2013-01-01
H04N	/	21	/	4331	I	2013-01-01
H04N	/	21	/	84	I	2013-01-01
H04N	/	21	/	8456	I	2013-01-01
H04L	/	65	/	80	I	2013-01-01
H04L	/	65	/	608	I	2013-01-01
H04L	/	67	/	02	I	2013-01-01
H04L	/	65	/	1069	I	2013-01-01
H04L	/	67	/	2842	I	2013-01-01
H04L	/	67	/	32	I	2013-01-01
H04N	/	21	/	2662	I	2013-01-01

CPC Combination Sets

Symbol					Type	Set	Ranking	Version
	/		/					

NONE (Assistant Examiner)	(Date)	**Total Claims Allowed:** 30	
/CHIRAG R PATEL/ Primary Examiner, Art Unit 2454 (Primary Examiner)	15 December 2021 (Date)	O.G. Print Claim(s) 1	O.G. Print Figure 4

U.S. Patent and Trademark Office

Part of Paper No.: 20211215

Issue Classification	Application/Control No.	Applicant(s)/Patent Under Reexamination
	16/876,579	BRUECK et al.
	Examiner	**Art Unit**
	CHIRAG R PATEL	2454

INTERNATIONAL CLASSIFICATION				
CLAIMED				
H04L	/	29	/	06

NON-CLAIMED				
	/		/	

US ORIGINAL CLASSIFICATION	
CLASS	**SUBCLASS**

CROSS REFERENCES(S)						
CLASS	**SUBCLASS (ONE SUBCLASS PER BLOCK)**					

NONE (Assistant Examiner) (Date)		**Total Claims Allowed:** 30	
/CHIRAG R PATEL/ Primary Examiner, Art Unit 2454 (Primary Examiner) (Date)	15 December 2021	O.G. Print Claim(s) 1	O.G. Print Figure 4

Issue Classification	Application/Control No.	Applicant(s)/Patent Under Reexamination
	16/876,579	BRUECK et al.
	Examiner	**Art Unit**
	CHIRAG R PATEL	2454

☑ Claims renumbered in the same order as presented by applicant ☐ CPA ☐ T.D. ☐ R.1.47

CLAIMS

Final	Original	Final	Original	Final	Original	Final	Original	Final	Original	Final	Original	Final	Original	Final	Original
	1		10		19		28								
	2		11		20		29								
	3		12		21		30								
	4		13		22										
	5		14		23										
	6		15		24										
	7		16		25										
	8		17		26										
	9		18		27										

NONE (Assistant Examiner)	(Date)	**Total Claims Allowed:** 30	
/CHIRAG R PATEL/ Primary Examiner, Art Unit 2454 (Primary Examiner)	15 December 2021 (Date)	O.G. Print Claim(s) 1	O.G. Print Figure 4

U.S. Patent and Trademark Office

Part of Paper No.: 20211215

Search Notes	Application/Control No.	Applicant(s)/Patent Under Reexamination
	16/876,579	BRUECK et al.
	Examiner	**Art Unit**
	CHIRAG R PATEL	2454

CPC - Searched*		
Symbol	**Date**	**Examiner**
H04N21/2662, H04N21/8456, H04L65/607,H04L65/608, H04L67/02	06/12/2020	C.P.

CPC Combination Sets - Searched*		
Symbol	**Date**	**Examiner**

US Classification - Searched*			
Class	**Subclass**	**Date**	**Examiner**

* See search history printout included with this form or the SEARCH NOTES box below to determine the scope of the search.

Search Notes		
Search Notes	**Date**	**Examiner**
EAST	06/12/2020	C.P.
EAST	02/01/2021	C.P.
EAST	09/10/2021	C.P.
Google Patents / Scholar	09/10/2021	C.P.
PE2E Search	12/15/2021	C.P.
Google Patents / Scholar	12/15/2021	C.P.

DISH EXHIBIT 2002, Page 1191
Aylo Freesites Ltd. v. Dish Technologies L.L.C.
IPR2024-00047

Search Notes	Application/Control No.	Applicant(s)/Patent Under Reexamination
	16/876,579	BRUECK et al.
	Examiner	**Art Unit**
	CHIRAG R PATEL	2454

Interference Search			
US Class/CPC Symbol	**US Subclass/CPC Group**	**Date**	**Examiner**
H04N	H04N21/2662, H04N21/8456,	09/10/2021	C.P.
H04L	H04L65/607,H04L65/608, H04L67/02	09/10/2021	C.P.

DISH EXHIBIT 2002, Page 1192
Aylo Freesites Ltd. v. Dish Technologies L.L.C.
IPR2024-00047

Doc code: IDS
Doc description: Information Disclosure Statement (IDS) Filed

PTO/SB/08a (02-18)
Approved for use through 11/30/2020. OMB 0651-0031
U.S. Patent and Trademark Office; U.S. DEPARTMENT OF COMMERCE
Under the Paperwork Reduction Act of 1995, no persons are required to respond to a collection of information unless it contains a valid OMB control number.

INFORMATION DISCLOSURE STATEMENT BY APPLICANT

(Not for submission under 37 CFR 1.99)

Application Number	16876579
Filing Date	2020-05-18
First Named Inventor	DAVID F. BRUECK
Art Unit	2454
Examiner Name	Chirag R. Patel
Attorney Docket Number	066.0141X1C9

U.S.PATENTS Remove

Examiner Initial*	Cite No	Patent Number	Kind Code[1]	Issue Date	Name of Patentee or Applicant of cited Document	Pages,Columns,Lines where Relevant Passages or Relevant Figures Appear
	1					

If you wish to add additional U.S. Patent citation information please click the Add button. Add

U.S.PATENT APPLICATION PUBLICATIONS Remove

Examiner Initial*	Cite No	Publication Number	Kind Code[1]	Publication Date	Name of Patentee or Applicant of cited Document	Pages,Columns,Lines where Relevant Passages or Relevant Figures Appear
	1					

If you wish to add additional U.S. Published Application citation information please click the Add button. Add

FOREIGN PATENT DOCUMENTS Remove

Examiner Initial*	Cite No	Foreign Document Number[3]	Country Code[2] i	Kind Code[4]	Publication Date	Name of Patentee or Applicant of cited Document	Pages,Columns,Lines where Relevant Passages or Relevant Figures Appear	T[5]
	1							

If you wish to add additional Foreign Patent Document citation information please click the Add button Add

NON-PATENT LITERATURE DOCUMENTS Remove

Examiner Initials*	Cite No	Include name of the author (in CAPITAL LETTERS), title of the article (when appropriate), title of the item (book, magazine, journal, serial, symposium, catalog, etc), date, pages(s), volume-issue number(s), publisher, city and/or country where published.	T[5]

ALL REFERENCES CONSIDERED EXCEPT WHERE LINED THROUGH. /C.R.P/

INFORMATION DISCLOSURE STATEMENT BY APPLICANT (Not for submission under 37 CFR 1.99)		
	Application Number	16876579
	Filing Date	2020-05-18
	First Named Inventor	DAVID F. BRUECK
	Art Unit	2454
	Examiner Name	Chirag R. Patel
	Attorney Docket Number	066.0141X1C9

	1	MUNTEAN, G-M., "A New Adaptive Multimedia Streaming System for All-iP Multi-Service Networks", IEEE Trans. On Broadcasting, March 2004, pp. 1-10, Vol. 50, No. 1.	
	2	Akamai buys InterVu, February 7, 2000.	
	3	Akamai, Akamai Completes Acquisition of Speedera Networks	
	4	Bill Gates Unveils the Next Wave of Digital Media with Windows Media 9 Series, September 3, 2002.	
	5	Darwin Steaming Server Source Code Developer Notes, June 15, 2021, Darwin Steaming Server 2	
	6	IBM Goes Straight to Video - CNET, June 15, 2021	
	7	News in Brief: IBM VideoCharger, December 18, 1996	
	8	BIRNEY, "Intelligent Streaming", May 21, 2021	
	9	InterVu & Excalibur Partner to Deliver Live Internet Newscasts - Bloomberg, December 9, 1999.	
	10	Introduction to Streaming Media with RealOne Player, October 1, 2002.	
	11	Macromedia Delivers Macromedia Flash Communication Server MX Breakthrough server unifies communications and applications to deliver live, human interactions on the Internet, July 9, 2002.	

ALL REFERENCES CONSIDERED EXCEPT WHERE LINED THROUGH. /C.R.P/

INFORMATION DISCLOSURE STATEMENT BY APPLICANT (Not for submission under 37 CFR 1.99)		
	Application Number	16876579
	Filing Date	2020-05-18
	First Named Inventor	DAVID F. BRUECK
	Art Unit	2454
	Examiner Name	Chirag R. Patel
	Attorney Docket Number	066.0141X1C9

	12	Press Releases: Macromedia Flash Media Server 2 Now Available. Flash Media Server 2 Brings the Power of the Flash Platform to Web Video.	
	13	Move Networks: The Story of a Failure - GigaOm	
	14	QuickTime 6: Summary of Changes and Enhancements	
	15	CHOU, et al., "Rate-Distortion Optimized Receiver-Driven Streaming over Best-Effort Networks", IEEE Fourth Workshop on Multimedia Signal Processing, 3 October 2001, pp. 1-10	
	16	FESTA P., RealNetworks tests G2, July 13, 1998.	
	17	RealNetworks Production Guide, with RealOne Player, October 1, 2002.	
	18	RealSystem G2 Production Guide BETA 1 Release	
	19	Sandpiper Networks Signs Partner Deals - InternetNews, October 7, 1999.	
	20	TOPIC, M. "Streaming Media Demystified", McGraw-Hill TELECOM, 2002	
	21	GALLAGHER, B., "Streaming Video From End to End", ITProToday, Compute Engines, Feb. 28, 1999	
	22	Move Networks: The Fall of Move Networks, Jan. 26, 2010.	

INFORMATION DISCLOSURE STATEMENT BY APPLICANT (Not for submission under 37 CFR 1.99)		
	Application Number	16876579
	Filing Date	2020-05-18
	First Named Inventor	DAVID F. BRUECK
	Art Unit	2454
	Examiner Name	Chirag R. Patel
	Attorney Docket Number	066.0141X1C9

	23	CONKLIN, G.J., et al. "Video Coding for Streaming Media Delivery on the Internet", IEEE Trans. on Circuits and Systems for Video Technology, March 3, 2001, pp. 281, Vol. 11. No 3.

If you wish to add additional non-patent literature document citation information please click the Add button Add

EXAMINER SIGNATURE

Examiner Signature	/CHIRAG R PATEL/	Date Considered	12/15/2021

*EXAMINER: Initial if reference considered, whether or not citation is in conformance with MPEP 609. Draw line through a citation if not in conformance and not considered. Include copy of this form with next communication to applicant.

[1] See Kind Codes of USPTO Patent Documents at www.USPTO.GOV or MPEP 901.04. [2] Enter office that issued the document, by the two-letter code (WIPO Standard ST.3). [3] For Japanese patent documents, the indication of the year of the reign of the Emperor must precede the serial number of the patent document. [4] Kind of document by the appropriate symbols as indicated on the document under WIPO Standard ST.16 if possible. [5] Applicant is to place a check mark here if English language translation is attached.

INFORMATION DISCLOSURE STATEMENT BY APPLICANT (Not for submission under 37 CFR 1.99)		
	Application Number	16876579
	Filing Date	2020-05-18
	First Named Inventor	DAVID F. BRUECK
	Art Unit	2454
	Examiner Name	Chirag R. Patel
	Attorney Docket Number	066.0141X1C9

CERTIFICATION STATEMENT

Please see 37 CFR 1.97 and 1.98 to make the appropriate selection(s):

That each item of information contained in the information disclosure statement was first cited in any communication from a foreign patent office in a counterpart foreign application not more than three months prior to the filing of the information disclosure statement. See 37 CFR 1.97(e)(1).

OR

☐ That no item of information contained in the information disclosure statement was cited in a communication from a foreign patent office in a counterpart foreign application, and, to the knowledge of the person signing the certification after making reasonable inquiry, no item of information contained in the information disclosure statement was known to any individual designated in 37 CFR 1.56(c) more than three months prior to the filing of the information disclosure statement. See 37 CFR 1.97(e)(2).

☒ See attached certification statement.

The fee set forth in 37 CFR 1.17 (p) has been submitted herewith.

A certification statement is not submitted herewith.

SIGNATURE

A signature of the applicant or representative is required in accordance with CFR 1.33, 10.18. Please see CFR 1.4(d) for the form of the signature.

Signature	/BRETT A. CARLSON/	Date (YYYY-MM-DD)	2021-11-17
Name/Print	Brett A. Carlson	Registration Number	39928

This collection of information is required by 37 CFR 1.97 and 1.98. The information is required to obtain or retain a benefit by the public which is to file (and by the USPTO to process) an application. Confidentiality is governed by 35 U.S.C. 122 and 37 CFR 1.14. This collection is estimated to take 1 hour to complete, including gathering, preparing and submitting the completed application form to the USPTO. Time will vary depending upon the individual case. Any comments on the amount of time you require to complete this form and/or suggestions for reducing this burden, should be sent to the Chief Information Officer, U.S. Patent and Trademark Office, U.S. Department of Commerce, P.O. Box 1450, Alexandria, VA 22313-1450. DO NOT SEND FEES OR COMPLETED FORMS TO THIS ADDRESS. **SEND TO: Commissioner for Patents, P.O. Box 1450, Alexandria, VA 22313-1450.**

ALL REFERENCES CONSIDERED EXCEPT WHERE LINED THROUGH. /C.R.P/

Privacy Act Statement

The Privacy Act of 1974 (P.L. 93-579) requires that you be given certain information in connection with your submission of the attached form related to a patent application or patent. Accordingly, pursuant to the requirements of the Act, please be advised that: (1) the general authority for the collection of this information is 35 U.S.C. 2(b)(2); (2) furnishing of the information solicited is voluntary; and (3) the principal purpose for which the information is used by the U.S. Patent and Trademark Office is to process and/or examine your submission related to a patent application or patent. If you do not furnish the requested information, the U.S. Patent and Trademark Office may not be able to process and/or examine your submission, which may result in termination of proceedings or abandonment of the application or expiration of the patent.

The information provided by you in this form will be subject to the following routine uses:

1. The information on this form will be treated confidentially to the extent allowed under the Freedom of Information Act (5 U.S.C. 552) and the Privacy Act (5 U.S.C. 552a). Records from this system of records may be disclosed to the Department of Justice to determine whether the Freedom of Information Act requires disclosure of these record s.

2. A record from this system of records may be disclosed, as a routine use, in the course of presenting evidence to a court, magistrate, or administrative tribunal, including disclosures to opposing counsel in the course of settlement negotiations.

3. A record in this system of records may be disclosed, as a routine use, to a Member of Congress submitting a request involving an individual, to whom the record pertains, when the individual has requested assistance from the Member with respect to the subject matter of the record.

4. A record in this system of records may be disclosed, as a routine use, to a contractor of the Agency having need for the information in order to perform a contract. Recipients of information shall be required to comply with the requirements of the Privacy Act of 1974, as amended, pursuant to 5 U.S.C. 552a(m).

5. A record related to an International Application filed under the Patent Cooperation Treaty in this system of records may be disclosed, as a routine use, to the International Bureau of the World Intellectual Property Organization, pursuant to the Patent Cooperation Treaty.

6. A record in this system of records may be disclosed, as a routine use, to another federal agency for purposes of National Security review (35 U.S.C. 181) and for review pursuant to the Atomic Energy Act (42 U.S.C. 218(c)).

7. A record from this system of records may be disclosed, as a routine use, to the Administrator, General Services, or his/her designee, during an inspection of records conducted by GSA as part of that agency's responsibility to recommend improvements in records management practices and programs, under authority of 44 U.S.C. 2904 and 2906. Such disclosure shall be made in accordance with the GSA regulations governing inspection of records for this purpose, and any other relevant (i.e., GSA or Commerce) directive. Such disclosure shall not be used to make determinations about individuals.

8. A record from this system of records may be disclosed, as a routine use, to the public after either publication of the application pursuant to 35 U.S.C. 122(b) or issuance of a patent pursuant to 35 U.S.C. 151. Further, a record may be disclosed, subject to the limitations of 37 CFR 1.14, as a routine use, to the public if the record was filed in an application which became abandoned or in which the proceedings were terminated and which application is referenced by either a published application, an application open to public inspections or an issued patent.

9. A record from this system of records may be disclosed, as a routine use, to a Federal, State, or local law enforcement agency, if the USPTO becomes aware of a violation or potential violation of law or regulation.

ALL REFERENCES CONSIDERED EXCEPT WHERE LINED THROUGH. /C.R.P/

Patents

(multi-bit rate encoding stream low medium high) segment streamle

About 74 results

Download · Side-by-side

Sort by · Relevance · Group by · None · Deduplicate by · Family · Results / page · 10

Intelligent network streaming and execution system for conventionally coded ...

US · US8892249B2 · Daniel T. Arai · Numecent Holdings, Inc.

Priority 2001-02-14 · Filed 2012-11-26 · Granted 2014-11-18 · Published 2014-11-18

In a system that partitions an application program into page segments, a minimal portion of the application program is installed on a client system. The client prefetches page segments from the application server or the application server pushes additional page segments to the client. The ...

Method and apparatus for authentication of data streams with adaptively ...

WO US JP · US8256015B2 · Craig B. Gentry · Ntt Docomo, Inc.

Priority 2003-08-15 · Filed 2009-09-16 · Granted 2012-08-28 · Published 2012-08-28

Methods, components, and systems for efficient authentication, either through a digital signature or message authentication codes, and verification of a digital stream sent from a source to a receiver via zero or more intermediaries, such that the source or intermediary (or both) can remove ...

Transcoding a JPEG2000 compressed image

EP US JP DE · US7382926B2 · Rajan L. Joshi · Eastman Kodak Company

Priority 2003-07-01 · Filed 2004-06-30 · Granted 2008-06-03 · Published 2008-06-03

A JPEG2000 compressed image is transcoded to a lower bit-rate or lower resolution, or both, without having to decompress the initial JPEG2000 image and then recompress it to a lower bit-rate and/or resolution. Instead, arithmetic decoding is performed only to the nearest higher bit-rate layer, up ...

Methods and compositions to improve the efficacy and specificity of FNAi

WO EP US AT AU CA DE ES · ES2887116T3 · Phillip Zamore · Univ Massachusetts

Priority 2003-06-02 · Filed 2004-06-02 · Granted 2021-09-03 · Published 2021-09-03

1. A method of enhancing the ability of an antisense strand of an RNAi agent to act as a guide strand in mediating RNAi, which comprises decreasing the base pair strength between the 5 'end of the antisense strand and the 3' end of the coding strand of the duplex when compared to the base pair ...

Method and apparatus for fast metadata generation, delivery and access for live ...

KR · KR100589823B1 · 송상훈 · 비트랩 인포메이션 인코포레이티드

Priority 2003-02-19 · Filed 2004-02-18 · Granted 2006-06-14 · Published 2006-06-14

Techniques for fast indexing of video broadcasts are provided that create meaningful and practical highlight hierarchies of broadcast television programs in real time, including efficient manual processes and automatic indexing steps. As one method, certain keywords describing the highlights are ...

Recording medium, reproduction apparatus, recording method, reproduction method ...

WO EP US CN JP KR AT AU CA DK ES RU TW ZA · JP2009021997A · Joseph Mccrossan · Panasonic Corp

Priority 2003-04-28 · Filed 2008-06-26 · Published 2009-01-29

<P>PROBLEM TO BE SOLVED: To provide a reproduction apparatus capable of providing update of graphics synchronized with display of a picture even when the quantity of data to be written on a graphics plane is large. <P>SOLUTION: An AVClip used as an object of this reproduction apparatus is ...

Optimized Server for Streamed Applications

US · US20150223015A1 · Anne Marie Holler · Numecent Holdings, Inc.

Priority 2000-11-06 · Filed 2014-09-03 · Published 2015-08-20

An optimized server for streamed applications provides a streamed application server optimized to provide efficient delivery of streamed applications to client systems across a computer network such as the internet. The server persistently stores streamed application program sets that contain ...

Recording medium, reproduction device, recording method, program, and ...

WO EP US CN JP KR CA DE · WO2004075547A1 · Tomoyuki Okada · Matsushita Electric Industrial Co., Ltd.

Priority 2003-02-19 · Filed 2004-02-18 · Published 2004-09-02

In a BD-ROM, an AV Clip and a plurality of reproduction interval information (Play item) are recorded. The AV Clip includes a moving picture stream multiplexed with a plurality of elementary streams. The reproduction interval information is Playable_PID_entries showing the reproduction start point ...

Apparatus method and system for increased digital media recording throughput

US • US6815093B1 • Glen Alan Jaquette • International Business Machines Corporation
Priority 2003-12-03 • Filed 2003-12-03 • Granted 2004-11-09 • Published 2004-11-09
A source data stream is distributed to two or more compression paths that provide a corresponding number of compressed data streams that are concurrently encoded onto a recording medium as a set of media tracks. In one embodiment, buffer space within each compression path is monitored and the ...

Classification and detection of computer intrusions

Google Scholar • citeseerx.ist.psu.edu • Kumar S
Published 1995
... There is a type field with every event that distinguishes among events in the event **stream**. ... Setting a threshold too **low** results in false positives and setting it too **high** results in false ... Our abstract classification hierarchy has four categories in which a category at a **higher** level ...

Next > >> About 74 results

Top 1000 results by filing date

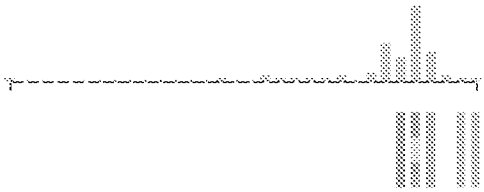

Relative count of top 5 values

Assignees	Inventors	CPCs
Eastman Kodak Company		4%
International Business Machines Corporation		4%
Nicholas Ryan		2.7%
Endeavors Technology, Inc.		2.7%
Numecent Holdings, Inc.		2.7%

Expand

About Send Feedback Public Datasets Terms Privacy Policy

Doc code: IDS
Doc description: Information Disclosure Statement (IDS) Filed

PTO/SB/08a (02-18)
Approved for use through 11/30/2020. OMB 0651-0031
U.S. Patent and Trademark Office; U.S. DEPARTMENT OF COMMERCE
Under the Paperwork Reduction Act of 1995, no persons are required to respond to a collection of information unless it contains a valid OMB control number.

INFORMATION DISCLOSURE STATEMENT BY APPLICANT

(Not for submission under 37 CFR 1.99)

Application Number	16876579
Filing Date	2020-05-18
First Named Inventor	DAVID F. BRUECK
Art Unit	2454
Examiner Name	Chirag R. Patel
Attorney Docket Number	066.0141X1C9

U.S.PATENTS Remove

Examiner Initial*	Cite No	Patent Number	Kind Code[1]	Issue Date	Name of Patentee or Applicant of cited Document	Pages,Columns,Lines where Relevant Passages or Relevant Figures Appear
	1					

If you wish to add additional U.S. Patent citation information please click the Add button. Add

U.S.PATENT APPLICATION PUBLICATIONS Remove

Examiner Initial*	Cite No	Publication Number	Kind Code[1]	Publication Date	Name of Patentee or Applicant of cited Document	Pages,Columns,Lines where Relevant Passages or Relevant Figures Appear
	1					

If you wish to add additional U.S. Published Application citation information please click the Add button. Add

FOREIGN PATENT DOCUMENTS Remove

Examiner Initial*	Cite No	Foreign Document Number[3]	Country Code[2] i	Kind Code[4]	Publication Date	Name of Patentee or Applicant of cited Document	Pages,Columns,Lines where Relevant Passages or Relevant Figures Appear	T[5]
	1							

If you wish to add additional Foreign Patent Document citation information please click the Add button Add

NON-PATENT LITERATURE DOCUMENTS Remove

Examiner Initials*	Cite No	Include name of the author (in CAPITAL LETTERS), title of the article (when appropriate), title of the item (book, magazine, journal, serial, symposium, catalog, etc), date, pages(s), volume-issue number(s), publisher, city and/or country where published.	T[5]

INFORMATION DISCLOSURE STATEMENT BY APPLICANT (Not for submission under 37 CFR 1.99)		
	Application Number	16876579
	Filing Date	2020-05-18
	First Named Inventor	DAVID F. BRUECK
	Art Unit	2454
	Examiner Name	Chirag R. Patel
	Attorney Docket Number	066.0141X1C9

	1	Claim Chart Against U.S. Patent No. 9,407,564 ("'564 patent") Akiyama et al	
	2	Claim Chart Against U.S. Patent No. 9,407,564 ("'564 patent") Arye et al.	
	3	Claim Chart Against U.S. Patent No. 9,407,564 ("'564 patent") Carmel et al.	
	4	Claim Chart Against U.S. Patent No. 9,407,564 ("'564 patent") Chou et al.	
	5	Claim Chart Against U.S. Patent No. 9,407,564 ("'564 patent") Durrant et al.	
	6	Claim Chart Against U.S. Patent No. 9,407,564 ("'564 patent") Gentric	
	7	Claim Chart Against U.S. Patent No. 9,407,564 ("'564 patent") Kitamura	
	8	Claim Chart Against U.S. Patent No. 9,407,564 ("'564 patent") Klemets et al.	
	9	Claim Chart Against U.S. Patent No. 9,407,564 ("'564 patent") Oplayo et al.	
	10	Claim Chart Against U.S. Patent No. 9,407,564 ("'564 patent") QOAS	
	11	Claim Chart Against U.S. Patent No. 9,407,564 ("'564 patent") QuickTime Changes	

ALL REFERENCES CONSIDERED EXCEPT WHERE LINED THROUGH. /C.R.P/

INFORMATION DISCLOSURE STATEMENT BY APPLICANT (Not for submission under 37 CFR 1.99)		
	Application Number	16876579
	Filing Date	2020-05-18
	First Named Inventor	DAVID F. BRUECK
	Art Unit	2454
	Examiner Name	Chirag R. Patel
	Attorney Docket Number	066.0141X1C9

	12	Claim Chart Against U.S. Patent No. 9,407,564 ("'564 patent") QuickTime	
	13	Claim Chart Against U.S. Patent No. 9,407,564 ("'564 patent") Ravi	
	14	Claim Chart Against U.S. Patent No. 9,407,564 ("'564 patent") RealOne Player	
	15	Claim Chart Against U.S. Patent No. 9,407,564 ("'564 patent") Walker	
	16	Claim Chart Against U.S. Patent No. 9,407,564 ("'564 patent") Wang	
	17	Claim Chart Against U.S. Patent No. 9,407,564 ("'564 patent") Wu	
	18	Claim Chart Against U.S. Patent No. 9,407,564 ("'564 patent") RealSystem G2	
	19	Claim Chart Against U.S. Patent No. 10,469,554 ("'554 patent") Akiyama et al.	
	20	Claim Chart Against U.S. Patent No. 10,469,554 ("'554 patent") Ayre	
	21	Claim Chart Against U.S. Patent No. 10,469,554 ("'554 patent") Carmel et. al.	
	22	Claim Chart Against U.S. Patent No. 10,469,554 ("'554 patent") Chou et. al.	

INFORMATION DISCLOSURE STATEMENT BY APPLICANT (Not for submission under 37 CFR 1.99)		
	Application Number	16876579
	Filing Date	2020-05-18
	First Named Inventor	DAVID F. BRUECK
	Art Unit	2454
	Examiner Name	Chirag R. Patel
	Attorney Docket Number	066.0141X1C9

	23	Claim Chart Against U.S. Patent No. 10,469,554 ("'554 patent") Durrant et. al.	
	24	Claim Chart Against U.S. Patent No. 10,469,554 ("'554 patent") Gentric	
	25	Claim Chart Against U.S. Patent No. 10,469,554 ("'554 patent") Kitamura	
	26	Claim Chart Against U.S. Patent No. 10,469,554 ("'554 patent") Klemets	
	27	Claim Chart Against U.S. Patent No. 10,469,554 ("'554 patent") Oplayo	
	28	Claim Chart Against U.S. Patent No. 10,469,554 ("'554 patent") QOAS	
	29	Claim Chart Against U.S. Patent No. 10,469,554 ("'554 patent") QuickTime Changes	
	30	Claim Chart Against U.S. Patent No. 10,469,554 ("'554 patent") QuickTime	
	31	Claim Chart Against U.S. Patent No. 10,469,554 ("'554 patent") Ravi	
	32	Claim Chart Against U.S. Patent No. 10,469,554 ("'554 patent") RealOne Player	
	33	Claim Chart Against U.S. Patent No. 10,469,554 ("'554 patent") Walker	

ALL REFERENCES CONSIDERED EXCEPT WHERE LINED THROUGH. /C.R.P/

INFORMATION DISCLOSURE STATEMENT BY APPLICANT (Not for submission under 37 CFR 1.99)		
	Application Number	16876579
	Filing Date	2020-05-18
	First Named Inventor	DAVID F. BRUECK
	Art Unit	2454
	Examiner Name	Chirag R. Patel
	Attorney Docket Number	066.0141X1C9

	34	Claim Chart Against U.S. Patent No. 10,469,554 ("'554 patent") Wang	
	35	Claim Chart Against U.S. Patent No. 10,469,554 ("'554 patent") Wu	
	36	Claim Chart Against U.S. Patent No. 10,469,554 ("'554 patent") Dey	
	37	Claim Chart Against U.S. Patent No. 10,469,554 ("'554 patent") Microsoft	

If you wish to add additional non-patent literature document citation information please click the Add button Add

EXAMINER SIGNATURE

Examiner Signature	/CHIRAG R PATEL/	Date Considered	12/15/2021

*EXAMINER: Initial if reference considered, whether or not citation is in conformance with MPEP 609. Draw line through a citation if not in conformance and not considered. Include copy of this form with next communication to applicant.

[1] See Kind Codes of USPTO Patent Documents at www.USPTO.GOV or MPEP 901.04. [2] Enter office that issued the document, by the two-letter code (WIPO Standard ST.3). [3] For Japanese patent documents, the indication of the year of the reign of the Emperor must precede the serial number of the patent document. [4] Kind of document by the appropriate symbols as indicated on the document under WIPO Standard ST.16 if possible. [5] Applicant is to place a check mark here if English language translation is attached.

INFORMATION DISCLOSURE STATEMENT BY APPLICANT (Not for submission under 37 CFR 1.99)		
	Application Number	16876579
	Filing Date	2020-05-18
	First Named Inventor	DAVID F. BRUECK
	Art Unit	2454
	Examiner Name	Chirag R. Patel
	Attorney Docket Number	066.0141X1C9

CERTIFICATION STATEMENT

Please see 37 CFR 1.97 and 1.98 to make the appropriate selection(s):

That each item of information contained in the information disclosure statement was first cited in any communication from a foreign patent office in a counterpart foreign application not more than three months prior to the filing of the information disclosure statement. See 37 CFR 1.97(e)(1).

OR

☐ That no item of information contained in the information disclosure statement was cited in a communication from a foreign patent office in a counterpart foreign application, and, to the knowledge of the person signing the certification after making reasonable inquiry, no item of information contained in the information disclosure statement was known to any individual designated in 37 CFR 1.56(c) more than three months prior to the filing of the information disclosure statement. See 37 CFR 1.97(e)(2).

☒ See attached certification statement.

The fee set forth in 37 CFR 1.17 (p) has been submitted herewith.

A certification statement is not submitted herewith.

SIGNATURE

A signature of the applicant or representative is required in accordance with CFR 1.33, 10.18. Please see CFR 1.4(d) for the form of the signature.

Signature	/BRETT A. CARLSON/	Date (YYYY-MM-DD)	2021-11-17
Name/Print	Brett A. Carslson	Registration Number	39,928

This collection of information is required by 37 CFR 1.97 and 1.98. The information is required to obtain or retain a benefit by the public which is to file (and by the USPTO to process) an application. Confidentiality is governed by 35 U.S.C. 122 and 37 CFR 1.14. This collection is estimated to take 1 hour to complete, including gathering, preparing and submitting the completed application form to the USPTO. Time will vary depending upon the individual case. Any comments on the amount of time you require to complete this form and/or suggestions for reducing this burden, should be sent to the Chief Information Officer, U.S. Patent and Trademark Office, U.S. Department of Commerce, P.O. Box 1450, Alexandria, VA 22313-1450. DO NOT SEND FEES OR COMPLETED FORMS TO THIS ADDRESS. **SEND TO: Commissioner for Patents, P.O. Box 1450, Alexandria, VA 22313-1450.**

Privacy Act Statement

The Privacy Act of 1974 (P.L. 93-579) requires that you be given certain information in connection with your submission of the attached form related to a patent application or patent. Accordingly, pursuant to the requirements of the Act, please be advised that: (1) the general authority for the collection of this information is 35 U.S.C. 2(b)(2); (2) furnishing of the information solicited is voluntary; and (3) the principal purpose for which the information is used by the U.S. Patent and Trademark Office is to process and/or examine your submission related to a patent application or patent. If you do not furnish the requested information, the U.S. Patent and Trademark Office may not be able to process and/or examine your submission, which may result in termination of proceedings or abandonment of the application or expiration of the patent.

The information provided by you in this form will be subject to the following routine uses:

1. The information on this form will be treated confidentially to the extent allowed under the Freedom of Information Act (5 U.S.C. 552) and the Privacy Act (5 U.S.C. 552a). Records from this system of records may be disclosed to the Department of Justice to determine whether the Freedom of Information Act requires disclosure of these record s.

2. A record from this system of records may be disclosed, as a routine use, in the course of presenting evidence to a court, magistrate, or administrative tribunal, including disclosures to opposing counsel in the course of settlement negotiations.

3. A record in this system of records may be disclosed, as a routine use, to a Member of Congress submitting a request involving an individual, to whom the record pertains, when the individual has requested assistance from the Member with respect to the subject matter of the record.

4. A record in this system of records may be disclosed, as a routine use, to a contractor of the Agency having need for the information in order to perform a contract. Recipients of information shall be required to comply with the requirements of the Privacy Act of 1974, as amended, pursuant to 5 U.S.C. 552a(m).

5. A record related to an International Application filed under the Patent Cooperation Treaty in this system of records may be disclosed, as a routine use, to the International Bureau of the World Intellectual Property Organization, pursuant to the Patent Cooperation Treaty.

6. A record in this system of records may be disclosed, as a routine use, to another federal agency for purposes of National Security review (35 U.S.C. 181) and for review pursuant to the Atomic Energy Act (42 U.S.C. 218(c)).

7. A record from this system of records may be disclosed, as a routine use, to the Administrator, General Services, or his/her designee, during an inspection of records conducted by GSA as part of that agency's responsibility to recommend improvements in records management practices and programs, under authority of 44 U.S.C. 2904 and 2906. Such disclosure shall be made in accordance with the GSA regulations governing inspection of records for this purpose, and any other relevant (i.e., GSA or Commerce) directive. Such disclosure shall not be used to make determinations about individuals.

8. A record from this system of records may be disclosed, as a routine use, to the public after either publication of the application pursuant to 35 U.S.C. 122(b) or issuance of a patent pursuant to 35 U.S.C. 151. Further, a record may be disclosed, subject to the limitations of 37 CFR 1.14, as a routine use, to the public if the record was filed in an application which became abandoned or in which the proceedings were terminated and which application is referenced by either a published application, an application open to public inspections or an issued patent.

9. A record from this system of records may be disclosed, as a routine use, to a Federal, State, or local law enforcement agency, if the USPTO becomes aware of a violation or potential violation of law or regulation.

Bibliographic Data

Application No: 16/876,579

Foreign Priority claimed: ○ Yes ◉ No

35 USC 119 (a-d) conditions met: ☐ Yes ☑ No ☐ Met After Allowance

Verified and Acknowledged: /CHIRAG R PATEL/ [ ]

Examiner's Signature | Initials

Title: APPARATUS, SYSTEM, AND METHOD FOR MULTI-BITRATE CONTENT STREAMING

FILING or 371(c) DATE	CLASS	GROUP ART UNIT	ATTORNEY DOCKET NO.
05/18/2020	709	2454	066.0141X1C9
RULE			

APPLICANTS

DISH Technologies L.L.C., Englewood, CO, UNITED STATES

INVENTORS

DAVID F. BRUECK, SARATOGA SPRINGS, UT, UNITED STATES

MARK B. HURST, CEDAR HILLS, UT, UNITED STATES

R. DREW MAJOR, OREM, UT, UNITED STATES

CONTINUING DATA

This application is a CON of 16004056 06/08/2018 PAT 10659513

16004056 is a CON of 15414025 01/24/2017 PAT 9998516

15414025 is a CON of 14719122 05/21/2015 PAT 9571551

14719122 is a CON of 14106051 12/13/2013 PAT 9071668

14106051 is a CON of 13617114 09/14/2012 PAT 8612624

13617114 is a CON of 12906940 10/18/2010 PAT 8402156

12906940 is a CON of 11673483 02/09/2007 PAT 7818444

11673483 is a CIP of 11116783 04/28/2005 PAT 8868772

11116783 has PRO of 60566831 04/30/2004

FOREIGN APPLICATIONS

IF REQUIRED, FOREIGN LICENSE GRANTED**

05/26/2020

STATE OR COUNTRY

UNITED STATES

ADDRESS

LKGLOBAL (Dish Technologies L.L.C.)

7010 E. COCHISE ROAD
SCOTTSDALE, AZ 85253
UNITED STATES

FILING FEE RECEIVED

$7,320

PE2E SEARCH - Search History (Prior Art)

Ref #	Hits	Search Query	DBs	Default Operator	Plurals	British Equivalents	Time Stamp
L1	1	("10659513").PN.	(US-PGPUB; USPAT; USOCR)	OR	OFF	OFF	2020/06/12 07:55 AM
L2	8	(("9571551") or ("9071668") or ("8612624") or ("8402156") or ("7818444") or ("8868772") or ("10469554") or ("10659513")).PN.	(US-PGPUB; USPAT; USOCR)	OR	OFF	OFF	2020/06/12 07:58 AM
L3	2	(("73369610") or ("20050055425") or ("20030103571")).PN.	(US-PGPUB; USPAT; USOCR)	OR	OFF	OFF	2020/06/12 10:29 AM
L4	3	(("7369610") or ("20050055425") or ("20030103571")).PN.	(US-PGPUB; USPAT; USOCR)	OR	OFF	OFF	2020/06/12 10:30 AM
L5	27	encod$3 near2 streamlets with bitrates	(US-PGPUB; USPAT; USOCR; FPRS; EPO)	OR	ON	ON	2020/06/12 10:36 AM
L6	1	("9751551").PN.	(US-PGPUB; USPAT; USOCR)	OR	OFF	OFF	2020/06/12 10:45 AM
L7	1	("9571551").PN.	(US-PGPUB; USPAT; USOCR)	OR	OFF	OFF	2020/06/12 10:46 AM
L8	1	("8402156").PN.	(US-PGPUB; USPAT; USOCR)	OR	OFF	OFF	2020/06/12 10:53 AM
L9	1	("7818444").PN.	(US-PGPUB; USPAT; USOCR)	OR	OFF	OFF	2020/06/12 10:55 AM
L10	7	(("20080162713") or ("20040170392") or ("20040143672") or ("6486803") or ("20030204519") or ("6486803") or ("20030005455") or ("20040054551") or ("20040170392")).PN.	(US-PGPUB; USPAT; USOCR)	OR	OFF	OFF	2020/06/12 11:02 AM
L11	54	streamlets with bitrates	(US-PGPUB; USPAT; USOCR; FPRS; EPO)	OR	ON	ON	2020/06/12 11:33 AM
L12	74	((H04N21/2662 OR H04N21/8456 OR H04L65/607 OR H04L65/608 OR H04L67/02).CPC.) and streamlet near3 encod$3	(US-PGPUB; USPAT; USOCR; FPRS; EPO)	OR	ON	ON	2020/06/12 12:37 PM
L13	0	((H04N21/2662 OR H04N21/8456 OR H04L65/607 OR H04L65/608 OR H04L67/02).CPC.) and	(US-PGPUB; USPAT; USOCR; FPRS; EPO)	OR	ON	ON	2020/06/12 01:03 PM

		streamlet near3 encod$3 and @rlad<"20040430"					
L14	5	((H04N21/2662 OR H04N21/8456 OR H04L65/607 OR H04L65/608 OR H04L67/02).CPC.) and streamlets and @rlad<"20040430"	(US-PGPUB; USPAT; USOCR; FPRS; EPO)	OR	ON	ON	2020/06/12 01:03 PM
L15	33997	portions with stream and @rlad<"20040430"	(US-PGPUB; USPAT; USOCR; FPRS; EPO)	OR	ON	ON	2020/06/12 01:28 PM
L16	1761238	portions with stream with bitrat$3and @rlad<"20040430"	(US-PGPUB; USPAT; USOCR; FPRS; EPO)	OR	ON	ON	2020/06/12 01:29 PM
L17	24	portions with stream with bitrat$3 and @rlad<"20040430"	(US-PGPUB; USPAT; USOCR; FPRS; EPO)	OR	ON	ON	2020/06/12 01:29 PM
L18	2	((H04N21/2662 OR H04N21/8456 OR H04L65/607 OR H04L65/608 OR H04L67/02).CPC.) and divid$3 with stream same bitrate and @rlad<"20040430"	(US-PGPUB; USPAT; USOCR; FPRS; EPO)	OR	ON	ON	2020/06/12 01:30 PM
L19	3	((H04N21/2662 OR H04N21/8456 OR H04L65/607 OR H04L65/608 OR H04L67/02).CPC.) and (divid$3 split$3)with stream same bitrate and @rlad<"20040430"	(US-PGPUB; USPAT; USOCR; FPRS; EPO)	OR	ON	ON	2020/06/12 01:30 PM
L20	1	("10469554").PN.	(US-PGPUB; USPAT; USOCR)	OR	OFF	OFF	2020/06/12 02:26 PM
L21	1	("10469554").PN.	(US-PGPUB; USPAT; USOCR)	OR	OFF	OFF	2020/06/12 02:44 PM
L22	1	("10469555").PN.	(US-PGPUB; USPAT; USOCR)	OR	OFF	OFF	2020/06/12 02:47 PM
L23	1	("10,469,554").PN.	(US-PGPUB; USPAT; USOCR)	OR	OFF	OFF	2021/02/01 04:44 PM
L24	1	("10,469,555").PN.	(US-PGPUB; USPAT; USOCR)	OR	OFF	OFF	2021/02/01 04:47 PM
L25	211	("20010013128"|"20010047423"|"20020029274"|"20020073167"|"20020091840"|"20020097750"|"20020131496"|"20020144276"|"20020152317"|"20020152318"|"20020156912"|"20020161898"|"20020161908"|"20020161911"|"2002016	(US-PGPUB; USPAT)	OR	ON	ON	2021/02/01 04:51 PM

		9926"|"20020174434"|" 20020176418"|"200201 78330"|"20020188745"| "20030005455"|"20030 014684"|"20030018966 "|"20030021166"|"2003 0021282"|"2003005599 5"|"20030065803"|"200 30067872"|"200300815 82"|"20030093790"|"20 030107994"|"20030135 631"|"20030135863"|"2 0030140159"|"2003015 1753"|"20030152036"|" 20030154239"|"200301 95977"|"20030204519"| "20030204602"|"20030 233464"|"20030236904 "|"20040003101"|"2004 0010613"|"2004003054 7"|"20040030599"|"200 40030797"|"200400310 54"|"20040049780"|"20 040054551"|"20040071 209"|"20040083283"|"2 0040093420"|"2004010 3444"|"20040117427"|" 20040143672"|"200401 68052"|"20040170392"| "20040179032"|"20040 199655"|"20040220926 "|"20040221088"|"2004 0260701"|"2004026795 6"|"20050015509"|"200 50033855"|"200500554 25"|"20050066063"|"20 050076136"|"20050084 166"|"20050108414"|"2 0050120107"|"2005012 3058"|"20050185578"|" 20050188051"|"200502 04046"|"20050251832"| "20050262257"|"20060 010003"|"20060059223 "|"20060075446"|"2006 0080718"|"2006013011 8"|"20060133809"|"200 60165166"|"200601682 90"|"20060206246"|"20 060236219"|"20060277 564"|"20061068295"|"2 0070024705"|"2007003 0833"|"20070067480"|" 20070079325"|"200700 94405"|"20070204310"| "20070280255"|"20080 028428"|"20080037527 "|"20080046939"|"2008					

		0056373"|"2008010464 7"|"20080120330"|"200 80120342"|"200801337 66"|"20080162713"|"20 080184688"|"20080195 744"|"20080205291"|"2 0080219151"|"2008022 2235"|"20080263180"|" 20080281803"|"200900 43906"|"20090055471"| "20090055547"|"20090 210549"|"20100098103 "|"20100262711"|"2011 0307545"|"2015005849 6"|"4535355"|"5168356" |"5267334"|"5404446"|" 5687095"|"5732183"|"5 7685627"|"5841432"|"5 953506"|"6091775"|"60 91777"|"6122660"|"617 2672"|"6185736"|"6195 680"|"6366614"|"63742 89"|"6389473"|"644971 9"|"6486803"|"6490627" |"6510553"|"6574591"|" 6604118"|"6618752"|"6 708213"|"6721723"|"67 31600"|"6757796"|"676 0772"|"6795863"|"6845 107"|"6850965"|"68598 39"|"6874015"|"696838 7"|"6976090"|"7054365" |"7054774"|"7054911"|" 7075986"|"7093001"|"7 096271"|"7099954"|"71 16894"|"7174385"|"719 4549"|"7240100"|"7260 640"|"7274740"|"72955 20"|"7310678"|"732507 3"|"7328243"|"7330908" |"7334044"|"7349358"|" 7349976"|"7369610"|"7 376747"|"7391717"|"74 08984"|"7412531"|"747 7688"|"7523181"|"7536 469"|"7546355"|"75588 69"|"7577750"|"759333 3"|"7599307"|"7609652" |"7653735"|"7707303"|" 7719985"|"7760801"|"7 779135"|"7788395"|"77 97439"|"7817985"|"781 8444"|"7925781"|"8036 265"|"8370514"|"84021 56"|"8521836"|"861262 4"|"8683066"|"8686066" |"8868772"|"8880721"|" 9344496"|"9462074").P				

L26	211	N. ("20010013128"|"20010047423"|"20020029274"|"20020073167"|"20020091840"|"20020097750"|"20020131496"|"20020144276"|"20020152317"|"20020152318"|"20020156912"|"20020161898"|"20020161908"|"20020161911"|"20020169926"|"20020174434"|"20020176418"|"20020178330"|"20020188745"|"20030005455"|"20030014684"|"20030018966"|"20030021166"|"20030021282"|"20030055995"|"20030065803"|"20030067872"|"20030081582"|"20030093790"|"20030107994"|"20030135631"|"20030135863"|"20030140159"|"20030151753"|"20030152036"|"20030154239"|"20030195977"|"20030204519"|"20030204602"|"20030233464"|"20030236904"|"20040003101"|"20040010613"|"20040030547"|"20040030599"|"20040030797"|"20040031054"|"20040049780"|"20040054551"|"20040071209"|"20040083283"|"20040093420"|"20040103444"|"20040117427"|"20040143672"|"20040168052"|"20040170392"|"20040179032"|"20040199655"|"20040220926"|"20040221088"|"20040260701"|"20040267956"|"20050015509"|"20050033855"|"20050055425"|"20050066063"|"20050076136"|"20050084166"|"20050108414"|"20050120107"|"20050123058"|"20050185578"|"20050188051"|"20050204046"|"20050251832"|"20050262257"|"20060010003"|"20060059223"|"20060075446"|"20060080718"|"20060130118"|"20060133809"|"200	(US-PGPUB; USPAT)	OR	ON	ON	2021/02/01 04:52 PM

		60165166"|"200601682 90"|"20060206246"|"20 060236219"|"20060277 564"|"20061068295"|"2 0070024705"|"2007003 0833"|"20070067480"|" 20070079325"|"200700 94405"|"20070204310"| "20070280255"|"20080 028428"|"20080037527 "|"20080046939"|"2008 0056373"|"2008010464 7"|"20080120330"|"200 80120342"|"200801337 66"|"20080162713"|"20 080184688"|"20080195 744"|"20080205291"|"2 0080219151"|"2008022 2235"|"20080263180"|" 20080281803"|"200900 43906"|"20090055471"| "20090055547"|"20090 210549"|"20100098103 "|"20100262711"|"2011 0307545"|"2015005849 6"|"4535355"|"5168356" |"5267334"|"5404446"|" 5687095"|"5732183"|"5 7685627"|"5841432"|"5 953506"|"6091775"|"60 91777"|"6122660"|"617 2672"|"6185736"|"6195 680"|"6366614"|"63742 89"|"6389473"|"644971 9"|"6486803"|"6490627" |"6510553"|"6574591"|" 6604118"|"6618752"|"6 708213"|"6721723"|"67 31600"|"6757796"|"676 0772"|"6795863"|"6845 107"|"6850965"|"68598 39"|"6874015"|"696838 7"|"6976090"|"7054365" |"7054774"|"7054911"|" 7075986"|"7093001"|"7 096271"|"7099954"|"71 16894"|"7174385"|"719 4549"|"7240100"|"7260 640"|"7274740"|"72955 20"|"7310678"|"732507 3"|"7328243"|"7330908" |"7334044"|"7349358"|" 7349976"|"7369610"|"7 376747"|"7391717"|"74 08984"|"7412531"|"747 7688"|"7523181"|"7536 469"|"7546355"|"75588 69"|"7577750"|"759333				

		3"|"7599307"|"7609652"|"7653735"|"7707303"|"7719985"|"7760801"|"7779135"|"7788395"|"7797439"|"7817985"|"7818444"|"7925781"|"8036265"|"8370514"|"8402156"|"8521836"|"8612624"|"8683066"|"8686066"|"8868772"|"8880721"|"9344496"|"9462074").PN.					
L27	17	(("5267334") or ("5404446") or ("5841432") or ("5389473") or ("6172672") or ("20020156912") or ("20030055995") or ("20030233464") or ("20020131496") or ("20030135863")).PN.	(US-PGPUB; USPAT; USOCR; FPRS; EPO; JPO)	OR	OFF	OFF	2021/02/01 04:57 PM
L28	211	("20010013128"|"20010047423"|"20020029274"|"20020073167"|"20020091840"|"20020097750"|"20020131496"|"20020144276"|"20020152317"|"20020152318"|"20020156912"|"20020161898"|"20020161908"|"20020161911"|"20020169926"|"20020174434"|"20020176418"|"20020178330"|"20020188745"|"20030005455"|"20030014684"|"20030018966"|"20030021166"|"20030021282"|"20030055995"|"20030065803"|"20030067872"|"20030081582"|"20030093790"|"20030107994"|"20030135631"|"20030135863"|"20030140159"|"20030151753"|"20030152036"|"20030154239"|"20030195977"|"20030204519"|"20030204602"|"20030233464"|"20030236904"|"20040003101"|"20040010613"|"20040030547"|"20040030599"|"20040030797"|"20040031054"|"20040049780"|"20040054551"|"20040071209"|"20040083283"|"2	(US-PGPUB; USPAT)	OR	ON	ON	2021/02/01 04:58 PM

		0040093420"|"2004010 3444"|"20040117427"|" 20040143672"|"200401 68052"|"20040170392"| "20040179032"|"20040 199655"|"20040220926 "|"20040221088"|"2004 0260701"|"2004026795 6"|"20050015509"|"200 50033855"|"200500554 25"|"20050066063"|"20 050076136"|"20050084 166"|"20050108414"|"2 0050120107"|"2005012 3058"|"20050185578"|" 20050188051"|"200502 04046"|"20050251832"| "20050262257"|"20060 010003"|"20060059223 "|"20060075446"|"2006 0080718"|"2006013011 8"|"20060133809"|"200 60165166"|"200601682 90"|"20060206246"|"20 060236219"|"20060277 564"|"20061068295"|"2 0070024705"|"2007003 0833"|"20070067480"|" 20070079325"|"200700 94405"|"20070204310"| "20070280255"|"20080 028428"|"20080037527 "|"20080046939"|"2008 0056373"|"2008010464 7"|"20080120330"|"200 80120342"|"200801337 66"|"20080162713"|"20 080184688"|"20080195 744"|"20080205291"|"2 0080219151"|"2008022 2235"|"20080263180"|" 20080281803"|"200900 43906"|"20090055471"| "20090055547"|"20090 210549"|"20100098103 "|"20100262711"|"2011 0307545"|"2015005849 6"|"4535355"|"5168356" |"5267334"|"5404446"|" 5687095"|"5732183"|"5 7685627"|"5841432"|"5 953506"|"6091775"|"60 91777"|"6122660"|"617 2672"|"6185736"|"6195 680"|"6366614"|"63742 89"|"6389473"|"644971 9"|"6486803"|"6490627" |"6510553"|"6574591"|"					

		6604118"|"6618752"|"6708213"|"6721723"|"6731600"|"6757796"|"6760772"|"6795863"|"6845107"|"6850965"|"6859839"|"6874015"|"6968387"|"6976090"|"7054365"|"7054774"|"7054911"|"7075986"|"7093001"|"7096271"|"7099954"|"7116894"|"7174385"|"7194549"|"7240100"|"7260640"|"7274740"|"7295520"|"7310678"|"7325073"|"7328243"|"7330908"|"7334044"|"7349358"|"7349976"|"7369610"|"7376747"|"7391717"|"7408984"|"7412531"|"7477688"|"7523181"|"7536469"|"7546355"|"7558869"|"7577750"|"7593333"|"7599307"|"7609652"|"7653735"|"7707303"|"7719985"|"7760801"|"7779135"|"7788395"|"7797439"|"7817985"|"7818444"|"7925781"|"8036265"|"8370514"|"8402156"|"8521836"|"8612624"|"8683066"|"8686066"|"8868772"|"8880721"|"9344496"|"9462074").PN.					
L29	0	(L25 L26 L27 L28) and streamlet with "same" near2 duration	(US-PGPUB; USPAT)	OR	ON	ON	2021/02/01 05:05 PM
L30	7	(L25 L26 L27 L28) and streamlet with duration	(US-PGPUB; USPAT)	OR	ON	ON	2021/02/01 05:06 PM
L31	46	(("8521836") or ("7558869") or ("7707303") or ("7925781") or ("8880721") or ("9344496") or ("8683066") or ("8686066") or ("6708213") or ("6757796") or ("9462074") or ("20050033855") or ("20030093790") or ("20030195977") or ("20040199655") or ("20040267956") or ("20040220926") or ("20060010003") or	(US-PGPUB; USPAT; USOCR; FPRS; EPO; JPO)	OR	ON	ON	2021/02/01 05:13 PM

		("20060277564") or ("20150058496") or ("20100262711") or ("20050251832") or ("20040221088") or ("20040179032") or ("20020161908") or ("20030021282") or ("20080120330") or ("20080120342") or ("20110307545") or ("20050262257") or ("20030236904")).PN.					
L32	0	(L27 L28 L31) and streamlet with multiple near2 bitrates with duration	(US-PGPUB; USPAT; USOCR; FPRS; EPO; JPO)	OR	ON	ON	2021/02/01 05:14 PM
L33	0	streamlet with multiple near2 bitrates with duration	(US-PGPUB; USPAT; USOCR; FPRS; EPO; JPO)	OR	ON	ON	2021/02/01 05:14 PM
L34	27	streamlet with multiple near2 bitrates	(US-PGPUB; USPAT; USOCR; FPRS; EPO; JPO)	OR	ON	ON	2021/02/01 05:15 PM
L35	27	streamlet with multiple near2 bitrates and duration	(US-PGPUB; USPAT; USOCR; FPRS; EPO; JPO)	OR	ON	ON	2021/02/01 05:15 PM
L36	4	streamlet near3 bit$2rates with duration	(US-PGPUB; USPAT; USOCR; FPRS; EPO; JPO)	OR	ON	ON	2021/09/10 09:45 AM
L37	9	portion near2 stream with duration with bit$2rate	(US-PGPUB; USPAT; USOCR; FPRS; EPO; JPO)	OR	ON	ON	2021/09/10 09:51 AM
L38	0	slic$3 near5 portion near2 stream with duration with bit$2rate	(US-PGPUB; USPAT; USOCR; FPRS; EPO; JPO)	OR	ON	ON	2021/09/10 09:52 AM
L39	6	slicing with stream with bit$2rate	(US-PGPUB; USPAT; USOCR; FPRS; EPO; JPO)	OR	ON	ON	2021/09/10 09:52 AM
L40	2	(("20030135631") or ("20020188745")).PN.	(US-PGPUB; USPAT; USOCR; FPRS; EPO; JPO)	OR	OFF	OFF	2021/09/10 10:09 AM
L41	24	multi-bit near rate near2 encod$3	(US-PGPUB; USPAT; USOCR; FPRS; EPO; JPO)	OR	ON	ON	2021/09/10 10:28 AM
L42	35	("20020002708"|"20020044528"|"20020170062"|"20030009578"|"20030061305"|"20030072376"|"20030236906"|"20040136327"|"20040202109"|"20040260827"|"20050177618"|"20050207569"|"20080022343"|"20080086570"|"5424455	(US-PGPUB; USPAT)	OR	ON	ON	2021/09/10 10:38 AM

		"|"5544318"|"5867230"|"5933603"|"5941951"|"5966015"|"5966025"|"6003030"|"6112239"|"6154744"|"6181867"|"6292383"|"6498897"|"6625643"|"6637031"|"6665726"|"6766407"|"6795863"|"7047307"|"7386627"|"7974200").PN.					
L49	1	("20030204519").PN.	(US-PGPUB; USPAT; USOCR; FPRS; EPO; JPO)	OR	OFF	OFF	2021/09/10 03:01 PM
L50	1	("10469554").PN.	(US-PGPUB; USPAT; USOCR)	OR	OFF	OFF	2021/09/10 04:04 PM
L51	1	("6389473").PN.	(US-PGPUB; USPAT; USOCR)	OR	OFF	OFF	2021/09/10 04:37 PM
L52	114	"1298931"	(US-PGPUB; USPAT; USOCR; FPRS; EPO; JPO)	OR	ON	ON	2021/09/10 04:41 PM
L53	1	("20200280594").PN.	(US-PGPUB; USPAT; USOCR)	OR	OFF	OFF	2021/09/10 05:23 PM
L54	31	("10469554" OR "10469555" OR "10757156" OR "10951680" OR "20020002708" OR "20020044528" OR "20020131496" OR "20030061305" OR "20030067872" OR "20030067875" OR "20030072376" OR "20030152036" OR "20030236906" OR "20040202109" OR "20040260827" OR "20050177618" OR "20080086570" OR "5414455" OR "5867230" OR "5941951" OR "5996025" OR "6292834" OR "6389473" OR "6490627" OR "6498897" OR "6637031" OR "7047307" OR "7386627" OR "8711701" OR "8818127" OR "9407564").pn.	(US-PGPUB; USPAT)	OR	ON	ON	2021/12/15 11:11 AM
L55	0	streamlet SAME bit$2rates AND low SAME medium SAME	(US-PGPUB; USPAT)	OR	ON	ON	2021/12/15 12:16 PM

		high near2 (stream bit$2rate) AND @rlad<"20040430"					
L56	39	streamlet SAME bit$2rates AND low SAME medium SAME high near2 (stream bit$2rate)	(US-PGPUB; USPAT)	OR	ON	ON	2021/12/15 12:16 PM

PE2E SEARCH - Search History (Interference)

Ref #	Hits	Search Query	DBs	Default Operator	Plurals	British Equivalents	Time Stamp
N43	84	((H04N21/2662 OR H04N21/8456 OR H04L65/607 OR H04L65/608 OR H04L67/02).CPC.) and streamlet near3 encod$3 and ((multi near bit$2rate)multiple)	(US-PGPUB; USPAT)	OR	ON	ON	2021/09/10 11:31 AM
N44	42	((H04N21/2662 OR H04N21/8456 OR H04L65/607 OR H04L65/608 OR H04L67/02).CPC.) and streamlet near3 encod$3 and ((multi near bit$2rate) (multiple near2 bit$2rate))	(US-PGPUB; USPAT)	OR	ON	ON	2021/09/10 11:32 AM
N45	69	((H04N21/2662 OR H04N21/8456 OR H04L65/607 OR H04L65/608 OR H04L67/02).CPC.) and streamlet near3 duration	(US-PGPUB; USPAT)	OR	ON	ON	2021/09/10 12:08 PM
N46	22	((H04N21/2662 OR H04N21/8456 OR H04L65/607 OR H04L65/608 OR H04L67/02).CPC.) and streamlet near3 duration with bit$2rate	(US-PGPUB; USPAT)	OR	ON	ON	2021/09/10 12:08 PM
N47	0	file with portion near2 stream near3 duration with bit$2rate	(US-PGPUB; USPAT)	OR	ON	ON	2021/09/10 12:14 PM
N48	0	((H04N21/2662 OR H04N21/8456 OR H04L65/607 OR H04L65/608 OR H04L67/02).CPC.) and streamlet near3 encod$3 and ((multi near bit$2rate)multiple)	(US-PGPUB; USPAT)	OR	ON	ON	2021/09/10 12:15 PM

		and @rlad<"20040205"					
N49	39	streamlet SAME bit$2rates AND low SAME medium SAME high near2 (stream bit$2rate)	(US-PGPUB; USPAT)	OR	ON	ON	2021/12/15 12:17 PM
N50	34	((H04N21/2662 OR H04N21/8456 OR H04L65/607 OR H04L65/608 OR H04L67/02).CPC.) AND streamlet near3 encod$3 AND ((multi NEAR bit$2rate) (multiple near2 bit$2rate)) AND low SAME medium SAME high	(US-PGPUB; USPAT)	OR	ON	ON	2021/12/15 12:23 PM
N51	0	((H04N21/2662 OR H04N21/8456 OR H04L65/607 OR H04L65/608 OR H04L67/02).CPC.) AND streamlet near3 encod$3 AND ((multi NEAR bit$2rate)multiple) AND @rlad<"20040430"	(US-PGPUB; USPAT)	OR	ON	ON	2021/12/15 01:52 PM
N52	0	((H04N21/2662 OR H04N21/8456 OR H04L65/607 OR H04L65/608 OR H04L67/02).CPC.) AND streamlet near3 encod$3 AND ((multi NEAR bit$2rate)multiple) AND @rlad<"20040430"	(US-PGPUB; USPAT)	OR	ON	ON	2021/12/15 01:52 PM

Doc code: IDS
Doc description: Information Disclosure Statement (IDS) Filed

PTO/SB/08a (02-18)
Approved for use through 11/30/2020. OMB 0651-0031
U.S. Patent and Trademark Office; U.S. DEPARTMENT OF COMMERCE
Under the Paperwork Reduction Act of 1995, no persons are required to respond to a collection of information unless it contains a valid OMB control number.

INFORMATION DISCLOSURE STATEMENT BY APPLICANT

(Not for submission under 37 CFR 1.99)

Application Number	16876579
Filing Date	2020-05-18
First Named Inventor	DAVID F. BRUECK
Art Unit	2454
Examiner Name	Chirag R. Patel
Attorney Docket Number	066.0141X1C9

U.S.PATENTS Remove

Examiner Initial*	Cite No	Patent Number	Kind Code[1]	Issue Date	Name of Patentee or Applicant of cited Document	Pages,Columns,Lines where Relevant Passages or Relevant Figures Appear
	1	5414455	A	1995-05-09	HOOPER Donald F et al.	
	2	5867230	A	1999-02-02	WANG Feng Chi et al.	
	3	5941951	A	1999-08-24	DAY Michael Norman et al.	
	4	5996025	A	1999-11-30	DAY Michael Norman et al.	
	5	6292834	B1	2001-09-18	RAVI et al.	
	6	6389473	B1	2002-05-14	CARMEL et al.	
	7	6490627	B1	2002-12-03	KALRA et al.	
	8	6498897	B1	2002-12-24	NELSON et al.	

INFORMATION DISCLOSURE STATEMENT BY APPLICANT (Not for submission under 37 CFR 1.99)		
	Application Number	16876579
	Filing Date	2020-05-18
	First Named Inventor	DAVID F. BRUECK
	Art Unit	2454
	Examiner Name	Chirag R. Patel
	Attorney Docket Number	066.0141X1C9

	9	6637031	B1	2003-10-21	CHOU	
	10	7047307	B2	2006-05-16	LI	
	11	7386627	B1	2008-06-10	LANGO et al.	
	12	8711701	B2	2014-04-29	JU	
	13	8818127	B2	2014-08-26	HAYATA et al.	
	14	9407564	B2	2016-08-02	MAJOR et al.	
	15	10469554	B2	2019-11-05	BRUECK et al.	
	16	10469555	B2	2019-11-05	BRUECK et al.	
	17	10757156	B2	2020-08-25	MAJOR et al.	
	18	10951680	B2	2021-03-16	BRUECK et al.	

If you wish to add additional U.S. Patent citation information please click the Add button. Add

U.S.PATENT APPLICATION PUBLICATIONS Remove

INFORMATION DISCLOSURE STATEMENT BY APPLICANT

(Not for submission under 37 CFR 1.99)

Application Number	16876579
Filing Date	2020-05-18
First Named Inventor	DAVID F. BRUECK
Art Unit	2454
Examiner Name	Chirag R. Patel
Attorney Docket Number	066.0141X1C9

Examiner Initial*	Cite No	Publication Number	Kind Code[1]	Publication Date	Name of Patentee or Applicant of cited Document	Pages,Columns,Lines where Relevant Passages or Relevant Figures Appear
	1	20020002708	A1	2002-01-03	ARYE	
	2	20020044528	A1	2002-04-18	POGREBINSKY et al.	
	3	20020131496	A1	2002-09-19	VASUDEVAN et al.	
	4	20030061305	A1	2003-03-27	COPLEY et al.	
	5	20030067872	A1	2003-04-10	HARRELL et al.	
	6	20030067875	A1	2003-04-10	YOSHIDA et al.	
	7	20030072376	A1	2003-04-17	KRISHNAMACHARI et al.	
	8	20030152036	A1	2003-08-14	QUIGG Brown et al.	
	9	20030236906	A1	2003-12-25	KLEMETS et al.	
	10	20040202109	A1	2004-10-14	AKIYAMA et al.	

INFORMATION DISCLOSURE STATEMENT BY APPLICANT (Not for submission under 37 CFR 1.99)		
	Application Number	16876579
	Filing Date	2020-05-18
	First Named Inventor	DAVID F. BRUECK
	Art Unit	2454
	Examiner Name	Chirag R. Patel
	Attorney Docket Number	066.0141X1C9

	11	20040260827	A1	2004-12-23	WANG	
	12	20050177618	A1	2005-08-11	ZIMLER et al.	
	13	20080086570	A1	2008-04-10	DEY et al.	

If you wish to add additional U.S. Published Application citation information please click the Add button. Add

FOREIGN PATENT DOCUMENTS Remove

Examiner Initial*	Cite No	Foreign Document Number[3]	Country Code[2] i	Kind Code[4]	Publication Date	Name of Patentee or Applicant of cited Document	Pages,Columns,Lines where Relevant Passages or Relevant Figures Appear	T[5]
	1	1394973	EP	B1	2010-05-26	MATSUSHITA ELECTRIC IND CO LTD		
	2	03041413	WO	A1	2003-05-15	PA CONSULTING SERVICES LIMITED		
	3	2005000116	KR	A	2005-01-06	SAMSUNG ELECTRONICS CO LTD		
	4	0245372	WO	A3	2002-09-06	BRITISH TELECOMMUNICATION PUBLIC LTD CO		
	5	2006086717	WO	A1	2006-08-17	VIDIATOR ENTERPRISES INC.		
	6	2004057832	WO	A1	2004-07-08	KONIN-KLIJKE PHILIPS ELECTRONICS N.V.		

ALL REFERENCES CONSIDERED EXCEPT WHERE LINED THROUGH. /C.R.P/

INFORMATION DISCLOSURE STATEMENT BY APPLICANT (Not for submission under 37 CFR 1.99)		
	Application Number	16876579
	Filing Date	2020-05-18
	First Named Inventor	DAVID F. BRUECK
	Art Unit	2454
	Examiner Name	Chirag R. Patel
	Attorney Docket Number	066.0141X1C9

	7	2004021668	WO	A1	2004-03-11	KONIN-KLIJKE PHILIPS ELECTRONICS N.V.		

If you wish to add additional Foreign Patent Document citation information please click the Add button Add

NON-PATENT LITERATURE DOCUMENTS Remove

Examiner Initials*	Cite No	Include name of the author (in CAPITAL LETTERS), title of the article (when appropriate), title of the item (book, magazine, journal, serial, symposium, catalog, etc), date, pages(s), volume-issue number(s), publisher, city and/or country where published.	T[5]
	1		

If you wish to add additional non-patent literature document citation information please click the Add button Add

EXAMINER SIGNATURE

Examiner Signature	/CHIRAG R PATEL/	Date Considered	12/15/2021

*EXAMINER: Initial if reference considered, whether or not citation is in conformance with MPEP 609. Draw line through a citation if not in conformance and not considered. Include copy of this form with next communication to applicant.

[1] See Kind Codes of USPTO Patent Documents at www.USPTO.GOV or MPEP 901.04. [2] Enter office that issued the document, by the two-letter code (WIPO Standard ST.3). [3] For Japanese patent documents, the indication of the year of the reign of the Emperor must precede the serial number of the patent document. [4] Kind of document by the appropriate symbols as indicated on the document under WIPO Standard ST.16 if possible. [5] Applicant is to place a check mark here if English language translation is attached.

INFORMATION DISCLOSURE STATEMENT BY APPLICANT (Not for submission under 37 CFR 1.99)		
	Application Number	16876579
	Filing Date	2020-05-18
	First Named Inventor	DAVID F. BRUECK
	Art Unit	2454
	Examiner Name	Chirag R. Patel
	Attorney Docket Number	066.0141X1C9

CERTIFICATION STATEMENT

Please see 37 CFR 1.97 and 1.98 to make the appropriate selection(s):

That each item of information contained in the information disclosure statement was first cited in any communication from a foreign patent office in a counterpart foreign application not more than three months prior to the filing of the information disclosure statement. See 37 CFR 1.97(e)(1).

OR

☐ That no item of information contained in the information disclosure statement was cited in a communication from a foreign patent office in a counterpart foreign application, and, to the knowledge of the person signing the certification after making reasonable inquiry, no item of information contained in the information disclosure statement was known to any individual designated in 37 CFR 1.56(c) more than three months prior to the filing of the information disclosure statement. See 37 CFR 1.97(e)(2).

☒ See attached certification statement.

The fee set forth in 37 CFR 1.17 (p) has been submitted herewith.

A certification statement is not submitted herewith.

SIGNATURE

A signature of the applicant or representative is required in accordance with CFR 1.33, 10.18. Please see CFR 1.4(d) for the form of the signature.

Signature	/BRETT A. CARLSON/	Date (YYYY-MM-DD)	2021-11-17
Name/Print	Brett A. Carlson	Registration Number	39,928

This collection of information is required by 37 CFR 1.97 and 1.98. The information is required to obtain or retain a benefit by the public which is to file (and by the USPTO to process) an application. Confidentiality is governed by 35 U.S.C. 122 and 37 CFR 1.14. This collection is estimated to take 1 hour to complete, including gathering, preparing and submitting the completed application form to the USPTO. Time will vary depending upon the individual case. Any comments on the amount of time you require to complete this form and/or suggestions for reducing this burden, should be sent to the Chief Information Officer, U.S. Patent and Trademark Office, U.S. Department of Commerce, P.O. Box 1450, Alexandria, VA 22313-1450. DO NOT SEND FEES OR COMPLETED FORMS TO THIS ADDRESS. **SEND TO: Commissioner for Patents, P.O. Box 1450, Alexandria, VA 22313-1450.**

Privacy Act Statement

The Privacy Act of 1974 (P.L. 93-579) requires that you be given certain information in connection with your submission of the attached form related to a patent application or patent. Accordingly, pursuant to the requirements of the Act, please be advised that: (1) the general authority for the collection of this information is 35 U.S.C. 2(b)(2); (2) furnishing of the information solicited is voluntary; and (3) the principal purpose for which the information is used by the U.S. Patent and Trademark Office is to process and/or examine your submission related to a patent application or patent. If you do not furnish the requested information, the U.S. Patent and Trademark Office may not be able to process and/or examine your submission, which may result in termination of proceedings or abandonment of the application or expiration of the patent.

The information provided by you in this form will be subject to the following routine uses:

1. The information on this form will be treated confidentially to the extent allowed under the Freedom of Information Act (5 U.S.C. 552) and the Privacy Act (5 U.S.C. 552a). Records from this system of records may be disclosed to the Department of Justice to determine whether the Freedom of Information Act requires disclosure of these record s.

2. A record from this system of records may be disclosed, as a routine use, in the course of presenting evidence to a court, magistrate, or administrative tribunal, including disclosures to opposing counsel in the course of settlement negotiations.

3. A record in this system of records may be disclosed, as a routine use, to a Member of Congress submitting a request involving an individual, to whom the record pertains, when the individual has requested assistance from the Member with respect to the subject matter of the record.

4. A record in this system of records may be disclosed, as a routine use, to a contractor of the Agency having need for the information in order to perform a contract. Recipients of information shall be required to comply with the requirements of the Privacy Act of 1974, as amended, pursuant to 5 U.S.C. 552a(m).

5. A record related to an International Application filed under the Patent Cooperation Treaty in this system of records may be disclosed, as a routine use, to the International Bureau of the World Intellectual Property Organization, pursuant to the Patent Cooperation Treaty.

6. A record in this system of records may be disclosed, as a routine use, to another federal agency for purposes of National Security review (35 U.S.C. 181) and for review pursuant to the Atomic Energy Act (42 U.S.C. 218(c)).

7. A record from this system of records may be disclosed, as a routine use, to the Administrator, General Services, or his/her designee, during an inspection of records conducted by GSA as part of that agency's responsibility to recommend improvements in records management practices and programs, under authority of 44 U.S.C. 2904 and 2906. Such disclosure shall be made in accordance with the GSA regulations governing inspection of records for this purpose, and any other relevant (i.e., GSA or Commerce) directive. Such disclosure shall not be used to make determinations about individuals.

8. A record from this system of records may be disclosed, as a routine use, to the public after either publication of the application pursuant to 35 U.S.C. 122(b) or issuance of a patent pursuant to 35 U.S.C. 151. Further, a record may be disclosed, subject to the limitations of 37 CFR 1.14, as a routine use, to the public if the record was filed in an application which became abandoned or in which the proceedings were terminated and which application is referenced by either a published application, an application open to public inspections or an issued patent.

9. A record from this system of records may be disclosed, as a routine use, to a Federal, State, or local law enforcement agency, if the USPTO becomes aware of a violation or potential violation of law or regulation.

Doc code: IDS
Doc description: Information Disclosure Statement (IDS) Filed

PTO/SB/08a (02-18)
Approved for use through 11/30/2020. OMB 0651-0031
U.S. Patent and Trademark Office; U.S. DEPARTMENT OF COMMERCE
Under the Paperwork Reduction Act of 1995, no persons are required to respond to a collection of information unless it contains a valid OMB control number.

INFORMATION DISCLOSURE STATEMENT BY APPLICANT

(Not for submission under 37 CFR 1.99)

Application Number	16876579
Filing Date	2020-05-18
First Named Inventor	DAVID F. BRUECK
Art Unit	2454
Examiner Name	Chirag R. Patel
Attorney Docket Number	066.0141X1C9

U.S.PATENTS Remove

Examiner Initial*	Cite No	Patent Number	Kind Code[1]	Issue Date	Name of Patentee or Applicant of cited Document	Pages,Columns,Lines where Relevant Passages or Relevant Figures Appear
	1					

If you wish to add additional U.S. Patent citation information please click the Add button. Add

U.S.PATENT APPLICATION PUBLICATIONS Remove

Examiner Initial*	Cite No	Publication Number	Kind Code[1]	Publication Date	Name of Patentee or Applicant of cited Document	Pages,Columns,Lines where Relevant Passages or Relevant Figures Appear
	1					

If you wish to add additional U.S. Published Application citation information please click the Add button. Add

FOREIGN PATENT DOCUMENTS Remove

Examiner Initial*	Cite No	Foreign Document Number[3]	Country Code[2] i	Kind Code[4]	Publication Date	Name of Patentee or Applicant of cited Document	Pages,Columns,Lines where Relevant Passages or Relevant Figures Appear	T[5]
	1							

If you wish to add additional Foreign Patent Document citation information please click the Add button Add

NON-PATENT LITERATURE DOCUMENTS Remove

Examiner Initials*	Cite No	Include name of the author (in CAPITAL LETTERS), title of the article (when appropriate), title of the item (book, magazine, journal, serial, symposium, catalog, etc), date, pages(s), volume-issue number(s), publisher, city and/or country where published.	T[5]

INFORMATION DISCLOSURE STATEMENT BY APPLICANT (Not for submission under 37 CFR 1.99)		
	Application Number	16876579
	Filing Date	2020-05-18
	First Named Inventor	DAVID F. BRUECK
	Art Unit	2454
	Examiner Name	Chirag R. Patel
	Attorney Docket Number	066.0141X1C9

	1	Claim Chart Against U.S. Patent No. 9,407,564 ("'564 patent") Akiyama et al	
	2	Claim Chart Against U.S. Patent No. 9,407,564 ("'564 patent") Arye et al.	
	3	Claim Chart Against U.S. Patent No. 9,407,564 ("'564 patent") Carmel et al.	
	4	Claim Chart Against U.S. Patent No. 9,407,564 ("'564 patent") Chou et al.	
	5	Claim Chart Against U.S. Patent No. 9,407,564 ("'564 patent") Durrant et al.	
	6	Claim Chart Against U.S. Patent No. 9,407,564 ("'564 patent") Gentric	
	7	Claim Chart Against U.S. Patent No. 9,407,564 ("'564 patent") Kitamura	
	8	Claim Chart Against U.S. Patent No. 9,407,564 ("'564 patent") Klemets et al.	
	9	Claim Chart Against U.S. Patent No. 9,407,564 ("'564 patent") Oplayo et al.	
	10	Claim Chart Against U.S. Patent No. 9,407,564 ("'564 patent") QOAS	
	11	Claim Chart Against U.S. Patent No. 9,407,564 ("'564 patent") QuickTime Changes	

INFORMATION DISCLOSURE STATEMENT BY APPLICANT (Not for submission under 37 CFR 1.99)		
	Application Number	16876579
	Filing Date	2020-05-18
	First Named Inventor	DAVID F. BRUECK
	Art Unit	2454
	Examiner Name	Chirag R. Patel
	Attorney Docket Number	066.0141X1C9

	12	Claim Chart Against U.S. Patent No. 9,407,564 ("'564 patent") QuickTime	
	13	Claim Chart Against U.S. Patent No. 9,407,564 ("'564 patent") Ravi	
	14	Claim Chart Against U.S. Patent No. 9,407,564 ("'564 patent") RealOne Player	
	15	Claim Chart Against U.S. Patent No. 9,407,564 ("'564 patent") Walker	
	16	Claim Chart Against U.S. Patent No. 9,407,564 ("'564 patent") Wang	
	17	Claim Chart Against U.S. Patent No. 9,407,564 ("'564 patent") Wu	
	18	Claim Chart Against U.S. Patent No. 9,407,564 ("'564 patent") RealSystem G2	
	19	Claim Chart Against U.S. Patent No. 10,469,554 ("'554 patent") Akiyama et al.	
	20	Claim Chart Against U.S. Patent No. 10,469,554 ("'554 patent") Ayre	
	21	Claim Chart Against U.S. Patent No. 10,469,554 ("'554 patent") Carmel et. al.	
	22	Claim Chart Against U.S. Patent No. 10,469,554 ("'554 patent") Chou et. al.	

ALL REFERENCES CONSIDERED EXCEPT WHERE LINED THROUGH. /C.R.P/

INFORMATION DISCLOSURE STATEMENT BY APPLICANT (Not for submission under 37 CFR 1.99)		
	Application Number	16876579
	Filing Date	2020-05-18
	First Named Inventor	DAVID F. BRUECK
	Art Unit	2454
	Examiner Name	Chirag R. Patel
	Attorney Docket Number	066.0141X1C9

	23	Claim Chart Against U.S. Patent No. 10,469,554 ("'554 patent") Durrant et. al.	
	24	Claim Chart Against U.S. Patent No. 10,469,554 ("'554 patent") Gentric	
	25	Claim Chart Against U.S. Patent No. 10,469,554 ("'554 patent") Kitamura	
	26	Claim Chart Against U.S. Patent No. 10,469,554 ("'554 patent") Klemets	
	27	Claim Chart Against U.S. Patent No. 10,469,554 ("'554 patent") Oplayo	
	28	Claim Chart Against U.S. Patent No. 10,469,554 ("'554 patent") QOAS	
	29	Claim Chart Against U.S. Patent No. 10,469,554 ("'554 patent") QuickTime Changes	
	30	Claim Chart Against U.S. Patent No. 10,469,554 ("'554 patent") QuickTime	
	31	Claim Chart Against U.S. Patent No. 10,469,554 ("'554 patent") Ravi	
	32	Claim Chart Against U.S. Patent No. 10,469,554 ("'554 patent") RealOne Player	
	33	Claim Chart Against U.S. Patent No. 10,469,554 ("'554 patent") Walker	

INFORMATION DISCLOSURE STATEMENT BY APPLICANT (Not for submission under 37 CFR 1.99)		
	Application Number	16876579
	Filing Date	2020-05-18
	First Named Inventor	DAVID F. BRUECK
	Art Unit	2454
	Examiner Name	Chirag R. Patel
	Attorney Docket Number	066.0141X1C9

	34	Claim Chart Against U.S. Patent No. 10,469,554 ("'554 patent") Wang	
	35	Claim Chart Against U.S. Patent No. 10,469,554 ("'554 patent") Wu	
	36	Claim Chart Against U.S. Patent No. 10,469,554 ("'554 patent") Dey	
	37	Claim Chart Against U.S. Patent No. 10,469,554 ("'554 patent") Microsoft	
	38	DISH - Respondent's Joint Disclosure of Supplemental Invalidity Contentions in Response to Individual Interrogatories.	
	39	MIRROR - RESPONDENTS LULULEMON ATHLETICA INC. and CURIOUSER PRODUCTS INC. d/b/a MIRROR FIRST AMENDED RESPONSE TO COMPLAINT UNDER SECTION 337 OF THE TARIFF ACT OF 1930, AS AMENDED, STATEMENT OF PUBLIC INTEREST AND NOTICE OF INSTITUTION OF INVESTIGATION.	
	40	PELOTON - RESPONDENT PELOTON INTERACTIVE, INC.'S FIRST AMENDED RESPONSE TO COMPLAINT AND TO NOTICE OF INVESTIGATION	
	41	ICON - RESPONDENTS' JOINT DISCLOSURE OF INITIAL INVALIDITY CONTENTIONS IN RESPONSE TO INDIVIDUAL INTERROGATORIES	
	42	RESPONDENTS' NOTICE OF PRIOR ART	
	43	ICON and Free Motion Fitness, Inc. VERIFIED RESPONSE OF ICON HEALTH & FITNESS, INC., FREE MOTION FITNESS, INC., AND NORDICTRACK, INC. TO COMPLAINT OF DISH DBS CORPORATION, DISH TECHNOLOGIES L.L.C., AND SLING TV L.L.C. AND TO NOTICE OF INVESTIGATION	

If you wish to add additional non-patent literature document citation information please click the Add button Add

INFORMATION DISCLOSURE STATEMENT BY APPLICANT (Not for submission under 37 CFR 1.99)		
	Application Number	16876579
	Filing Date	2020-05-18
	First Named Inventor	DAVID F. BRUECK
	Art Unit	2454
	Examiner Name	Chirag R. Patel
	Attorney Docket Number	066.0141X1C9

EXAMINER SIGNATURE			
Examiner Signature	/CHIRAG R PATEL/	Date Considered	12/15/2021

*EXAMINER: Initial if reference considered, whether or not citation is in conformance with MPEP 609. Draw line through a citation if not in conformance and not considered. Include copy of this form with next communication to applicant.

[1] See Kind Codes of USPTO Patent Documents at www.USPTO.GOV or MPEP 901.04. [2] Enter office that issued the document, by the two-letter code (WIPO Standard ST.3). [3] For Japanese patent documents, the indication of the year of the reign of the Emperor must precede the serial number of the patent document. [4] Kind of document by the appropriate symbols as indicated on the document under WIPO Standard ST.16 if possible. [5] Applicant is to place a check mark here if English language translation is attached.

INFORMATION DISCLOSURE STATEMENT BY APPLICANT (Not for submission under 37 CFR 1.99)		
	Application Number	16876579
	Filing Date	2020-05-18
	First Named Inventor	DAVID F. BRUECK
	Art Unit	2454
	Examiner Name	Chirag R. Patel
	Attorney Docket Number	066.0141X1C9

CERTIFICATION STATEMENT

Please see 37 CFR 1.97 and 1.98 to make the appropriate selection(s):

That each item of information contained in the information disclosure statement was first cited in any communication from a foreign patent office in a counterpart foreign application not more than three months prior to the filing of the information disclosure statement. See 37 CFR 1.97(e)(1).

OR

☐ That no item of information contained in the information disclosure statement was cited in a communication from a foreign patent office in a counterpart foreign application, and, to the knowledge of the person signing the certification after making reasonable inquiry, no item of information contained in the information disclosure statement was known to any individual designated in 37 CFR 1.56(c) more than three months prior to the filing of the information disclosure statement. See 37 CFR 1.97(e)(2).

☒ See attached certification statement.

The fee set forth in 37 CFR 1.17 (p) has been submitted herewith.

A certification statement is not submitted herewith.

SIGNATURE

A signature of the applicant or representative is required in accordance with CFR 1.33, 10.18. Please see CFR 1.4(d) for the form of the signature.

Signature	/BRETT A. CARLSON/	Date (YYYY-MM-DD)	2021-11-17
Name/Print	Brett A. Carslson	Registration Number	39,928

This collection of information is required by 37 CFR 1.97 and 1.98. The information is required to obtain or retain a benefit by the public which is to file (and by the USPTO to process) an application. Confidentiality is governed by 35 U.S.C. 122 and 37 CFR 1.14. This collection is estimated to take 1 hour to complete, including gathering, preparing and submitting the completed application form to the USPTO. Time will vary depending upon the individual case. Any comments on the amount of time you require to complete this form and/or suggestions for reducing this burden, should be sent to the Chief Information Officer, U.S. Patent and Trademark Office, U.S. Department of Commerce, P.O. Box 1450, Alexandria, VA 22313-1450. DO NOT SEND FEES OR COMPLETED FORMS TO THIS ADDRESS. **SEND TO: Commissioner for Patents, P.O. Box 1450, Alexandria, VA 22313-1450.**

Privacy Act Statement

The Privacy Act of 1974 (P.L. 93-579) requires that you be given certain information in connection with your submission of the attached form related to a patent application or patent. Accordingly, pursuant to the requirements of the Act, please be advised that: (1) the general authority for the collection of this information is 35 U.S.C. 2(b)(2); (2) furnishing of the information solicited is voluntary; and (3) the principal purpose for which the information is used by the U.S. Patent and Trademark Office is to process and/or examine your submission related to a patent application or patent. If you do not furnish the requested information, the U.S. Patent and Trademark Office may not be able to process and/or examine your submission, which may result in termination of proceedings or abandonment of the application or expiration of the patent.

The information provided by you in this form will be subject to the following routine uses:

1. The information on this form will be treated confidentially to the extent allowed under the Freedom of Information Act (5 U.S.C. 552) and the Privacy Act (5 U.S.C. 552a). Records from this system of records may be disclosed to the Department of Justice to determine whether the Freedom of Information Act requires disclosure of these record s.

2. A record from this system of records may be disclosed, as a routine use, in the course of presenting evidence to a court, magistrate, or administrative tribunal, including disclosures to opposing counsel in the course of settlement negotiations.

3. A record in this system of records may be disclosed, as a routine use, to a Member of Congress submitting a request involving an individual, to whom the record pertains, when the individual has requested assistance from the Member with respect to the subject matter of the record.

4. A record in this system of records may be disclosed, as a routine use, to a contractor of the Agency having need for the information in order to perform a contract. Recipients of information shall be required to comply with the requirements of the Privacy Act of 1974, as amended, pursuant to 5 U.S.C. 552a(m).

5. A record related to an International Application filed under the Patent Cooperation Treaty in this system of records may be disclosed, as a routine use, to the International Bureau of the World Intellectual Property Organization, pursuant to the Patent Cooperation Treaty.

6. A record in this system of records may be disclosed, as a routine use, to another federal agency for purposes of National Security review (35 U.S.C. 181) and for review pursuant to the Atomic Energy Act (42 U.S.C. 218(c)).

7. A record from this system of records may be disclosed, as a routine use, to the Administrator, General Services, or his/her designee, during an inspection of records conducted by GSA as part of that agency's responsibility to recommend improvements in records management practices and programs, under authority of 44 U.S.C. 2904 and 2906. Such disclosure shall be made in accordance with the GSA regulations governing inspection of records for this purpose, and any other relevant (i.e., GSA or Commerce) directive. Such disclosure shall not be used to make determinations about individuals.

8. A record from this system of records may be disclosed, as a routine use, to the public after either publication of the application pursuant to 35 U.S.C. 122(b) or issuance of a patent pursuant to 35 U.S.C. 151. Further, a record may be disclosed, subject to the limitations of 37 CFR 1.14, as a routine use, to the public if the record was filed in an application which became abandoned or in which the proceedings were terminated and which application is referenced by either a published application, an application open to public inspections or an issued patent.

9. A record from this system of records may be disclosed, as a routine use, to a Federal, State, or local law enforcement agency, if the USPTO becomes aware of a violation or potential violation of law or regulation.

ALL REFERENCES CONSIDERED EXCEPT WHERE LINED THROUGH. /C.R.P/

PTO/SB/08a (02-18)
Approved for use through 11/30/2020. OMB 0651-0031
U.S. Patent and Trademark Office; U.S. DEPARTMENT OF COMMERCE
Under the Paperwork Reduction Act of 1995, no persons are required to respond to a collection of information unless it contains a valid OMB control number.

INFORMATION DISCLOSURE STATEMENT BY APPLICANT

(Not for submission under 37 CFR 1.99)

Application Number	16876579
Filing Date	2020-05-18
First Named Inventor	DAVID F. BRUECK
Art Unit	2454
Examiner Name	Chirag R. Patel
Attorney Docket Number	066.0141X1C9

U.S.PATENTS Remove

Examiner Initial*	Cite No	Patent Number	Kind Code[1]	Issue Date	Name of Patentee or Applicant of cited Document	Pages,Columns,Lines where Relevant Passages or Relevant Figures Appear
	1					

If you wish to add additional U.S. Patent citation information please click the Add button. Add

U.S.PATENT APPLICATION PUBLICATIONS Remove

Examiner Initial*	Cite No	Publication Number	Kind Code[1]	Publication Date	Name of Patentee or Applicant of cited Document	Pages,Columns,Lines where Relevant Passages or Relevant Figures Appear
	1					

If you wish to add additional U.S. Published Application citation information please click the Add button. Add

FOREIGN PATENT DOCUMENTS Remove

Examiner Initial*	Cite No	Foreign Document Number[3]	Country Code[2] i	Kind Code[4]	Publication Date	Name of Patentee or Applicant of cited Document	Pages,Columns,Lines where Relevant Passages or Relevant Figures Appear	T[5]
	1							

If you wish to add additional Foreign Patent Document citation information please click the Add button Add

NON-PATENT LITERATURE DOCUMENTS Remove

Examiner Initials*	Cite No	Include name of the author (in CAPITAL LETTERS), title of the article (when appropriate), title of the item (book, magazine, journal, serial, symposium, catalog, etc), date, pages(s), volume-issue number(s), publisher, city and/or country where published.	T[5]

INFORMATION DISCLOSURE STATEMENT BY APPLICANT (Not for submission under 37 CFR 1.99)	Application Number	16876579
	Filing Date	2020-05-18
	First Named Inventor	DAVID F. BRUECK
	Art Unit	2454
	Examiner Name	Chirag R. Patel
	Attorney Docket Number	066.0141X1C9

	1	Investigation No. 337-TA-1265: Redacted REBUTTAL EXPERT REPORT OF TERESA STANEK REA	
	2	Investigation No. 337-TA-1265: Redacted REBUTTAL EXPERT REPORT OF KEVIN JEFFAY, PHD., REGARDING VALIDITY	
	3	Investigation No. 337-TA-1265: Redacted EXPERT REPORT OF DR. IAIN RICHARDSON ON INVALIDITY	
	4	Investigation No. 337-TA-1265: Redacted EXPERT REPORT OF ROBERT L. STOLL	

If you wish to add additional non-patent literature document citation information please click the Add button Add

EXAMINER SIGNATURE

Examiner Signature		Date Considered	

*EXAMINER: Initial if reference considered, whether or not citation is in conformance with MPEP 609. Draw line through a citation if not in conformance and not considered. Include copy of this form with next communication to applicant.

[1] See Kind Codes of USPTO Patent Documents at www.USPTO.GOV or MPEP 901.04. [2] Enter office that issued the document, by the two-letter code (WIPO Standard ST.3). [3] For Japanese patent documents, the indication of the year of the reign of the Emperor must precede the serial number of the patent document. [4] Kind of document by the appropriate symbols as indicated on the document under WIPO Standard ST.16 if possible. [5] Applicant is to place a check mark here if English language translation is attached.

INFORMATION DISCLOSURE STATEMENT BY APPLICANT (Not for submission under 37 CFR 1.99)	Application Number	16876579
	Filing Date	2020-05-18
	First Named Inventor	DAVID F. BRUECK
	Art Unit	2454
	Examiner Name	Chirag R. Patel
	Attorney Docket Number	066.0141X1C9

CERTIFICATION STATEMENT

Please see 37 CFR 1.97 and 1.98 to make the appropriate selection(s):

That each item of information contained in the information disclosure statement was first cited in any communication from a foreign patent office in a counterpart foreign application not more than three months prior to the filing of the information disclosure statement. See 37 CFR 1.97(e)(1).

OR

☐ That no item of information contained in the information disclosure statement was cited in a communication from a foreign patent office in a counterpart foreign application, and, to the knowledge of the person signing the certification after making reasonable inquiry, no item of information contained in the information disclosure statement was known to any individual designated in 37 CFR 1.56(c) more than three months prior to the filing of the information disclosure statement. See 37 CFR 1.97(e)(2).

☒ See attached certification statement.

The fee set forth in 37 CFR 1.17 (p) has been submitted herewith.

A certification statement is not submitted herewith.

SIGNATURE

A signature of the applicant or representative is required in accordance with CFR 1.33, 10.18. Please see CFR 1.4(d) for the form of the signature.

Signature	/BRETT A. CARLSON/	Date (YYYY-MM-DD)	2022-01-06
Name/Print	Brett A. Carlson	Registration Number	39928

This collection of information is required by 37 CFR 1.97 and 1.98. The information is required to obtain or retain a benefit by the public which is to file (and by the USPTO to process) an application. Confidentiality is governed by 35 U.S.C. 122 and 37 CFR 1.14. This collection is estimated to take 1 hour to complete, including gathering, preparing and submitting the completed application form to the USPTO. Time will vary depending upon the individual case. Any comments on the amount of time you require to complete this form and/or suggestions for reducing this burden, should be sent to the Chief Information Officer, U.S. Patent and Trademark Office, U.S. Department of Commerce, P.O. Box 1450, Alexandria, VA 22313-1450. DO NOT SEND FEES OR COMPLETED FORMS TO THIS ADDRESS. **SEND TO: Commissioner for Patents, P.O. Box 1450, Alexandria, VA 22313-1450.**

Privacy Act Statement

The Privacy Act of 1974 (P.L. 93-579) requires that you be given certain information in connection with your submission of the attached form related to a patent application or patent. Accordingly, pursuant to the requirements of the Act, please be advised that: (1) the general authority for the collection of this information is 35 U.S.C. 2(b)(2); (2) furnishing of the information solicited is voluntary; and (3) the principal purpose for which the information is used by the U.S. Patent and Trademark Office is to process and/or examine your submission related to a patent application or patent. If you do not furnish the requested information, the U.S. Patent and Trademark Office may not be able to process and/or examine your submission, which may result in termination of proceedings or abandonment of the application or expiration of the patent.

The information provided by you in this form will be subject to the following routine uses:

1. The information on this form will be treated confidentially to the extent allowed under the Freedom of Information Act (5 U.S.C. 552) and the Privacy Act (5 U.S.C. 552a). Records from this system of records may be disclosed to the Department of Justice to determine whether the Freedom of Information Act requires disclosure of these record s.

2. A record from this system of records may be disclosed, as a routine use, in the course of presenting evidence to a court, magistrate, or administrative tribunal, including disclosures to opposing counsel in the course of settlement negotiations.

3. A record in this system of records may be disclosed, as a routine use, to a Member of Congress submitting a request involving an individual, to whom the record pertains, when the individual has requested assistance from the Member with respect to the subject matter of the record.

4. A record in this system of records may be disclosed, as a routine use, to a contractor of the Agency having need for the information in order to perform a contract. Recipients of information shall be required to comply with the requirements of the Privacy Act of 1974, as amended, pursuant to 5 U.S.C. 552a(m).

5. A record related to an International Application filed under the Patent Cooperation Treaty in this system of records may be disclosed, as a routine use, to the International Bureau of the World Intellectual Property Organization, pursuant to the Patent Cooperation Treaty.

6. A record in this system of records may be disclosed, as a routine use, to another federal agency for purposes of National Security review (35 U.S.C. 181) and for review pursuant to the Atomic Energy Act (42 U.S.C. 218(c)).

7. A record from this system of records may be disclosed, as a routine use, to the Administrator, General Services, or his/her designee, during an inspection of records conducted by GSA as part of that agency's responsibility to recommend improvements in records management practices and programs, under authority of 44 U.S.C. 2904 and 2906. Such disclosure shall be made in accordance with the GSA regulations governing inspection of records for this purpose, and any other relevant (i.e., GSA or Commerce) directive. Such disclosure shall not be used to make determinations about individuals.

8. A record from this system of records may be disclosed, as a routine use, to the public after either publication of the application pursuant to 35 U.S.C. 122(b) or issuance of a patent pursuant to 35 U.S.C. 151. Further, a record may be disclosed, subject to the limitations of 37 CFR 1.14, as a routine use, to the public if the record was filed in an application which became abandoned or in which the proceedings were terminated and which application is referenced by either a published application, an application open to public inspections or an issued patent.

9. A record from this system of records may be disclosed, as a routine use, to a Federal, State, or local law enforcement agency, if the USPTO becomes aware of a violation or potential violation of law or regulation.

IDS CERTIFICATION STATEMENTS

I. THIS IDS IS BEING FILED UNDER 37 C.F.R. 1.97(b): (check one box)

☐ Within three months of the filing date of a national application other than a continued prosecution application under 1.53(d).

☐ Within three months of the date of entry of the national stage as set forth in 1.491 in an international application.

☐ Before the mailing date of a first Office Action on the merits. In the event that a first Office Action on the merits has been mailed, please consider this IDS under 37 C.F.R. 1.97(c) and see the statement under 1.97(e) **or** charge deposit account 50-2091 the fee specified by 37 C.F.R. 1.17(p) if such statement is not selected in Section IV.

☐ Before the mailing of a first Office Action after the filing of a request for continued examination under 1.114.

II. THIS IDS IS BEING FILED UNDER 37 C.F.R. 1.97(c):

☐ After the period specified in 37 C.F.R. 1.97(b) and before the mailing date of any of a final action under 1.113, a notice of allowance under 1.311 or an action that otherwise closes prosecution in the application, and accompanied by:

- ☐ a statement specified in 1.97(e) as subsequently provided in this IDS; or
- ☐ the fee set forth in 1.17(p).

III. THIS IDS IS BEING FILED UNDER 37 C.F.R. 1.97(d):

☑ After the period specified in 37 C.F.R. 1.97(c) and on or after the mailing date of any of a final action under 1.113, a notice of allowance under 1.311 or an action that otherwise closes prosecution in the application, but before or simultaneous with payment of the issue fee, and accompanied by a statement specified in 1.97(e) as subsequently provided in this IDS **and** the fee set forth in 1.17(p).

IV. Statement under 37 C.F.R. 1.97(e) (check only one box)

The undersigned hereby states that:

☐ Each item of information contained in the IDS was first cited in any communication from a foreign patent office in a counterpart foreign application not more than three months prior to the filing of this IDS.

☑ No item of information contained in the IDS was cited in a communication from a foreign patent office in a counterpart foreign application, and, to knowledge of the person signing the certification after making reasonable inquiry, no item of information contained in the IDS was known to any individual designated in 37 C.F.R. 1.56(c) more than three months prior to the filing of this IDS.

V. Statement under 37 C.F.R. §1.704(d):

☐ The undersigned hereby states that each item of information contained in the information disclosure statement: (i) was first cited in any communication from a patent office in a counterpart foreign or international application or from the Office, and this communication was not received by any individual designated in § 1.56(c) more than thirty days prior to the filing of the information disclosure statement; or (ii) is a communication that was issued by a patent office in a counterpart foreign or international application or by the Office, and this communication was not received by any individual designated in § 1.56(c) more than thirty days prior to the filing of the information disclosure statement..

VI. CONCLUSION

It is respectfully submitted that the claims presently on file patently distinguish the present invention from each of the references cited in this IDS. The references cited in this IDS are being cited only in the interest of candor and without any admission that they constitute statutory prior art or contain matter which anticipates the invention or which would render the same obvious, either singly or in a combination, to a person of ordinary skill in the art. Furthermore the filing of this IDS should not be construed to be an admission that the information cited in this IDS is, or is considered to be, material to patentability as defined in 1.56(b). In addition, the filing of this IDS should not be construed as a representation that a search has been made.

If the Examiner has any questions concerning this IDS, the Examiner is requested to contact the undersigned at the telephone number associated with Customer No. 70560 . If it is determined that this IDS has been filed under the wrong rule, the PTO is requested to consider this IDS under the proper rule, with a petition if necessary, and charge the appropriate fee to Deposit Account No. 50-2091.

UNITED STATES
PATENT AND TRADEMARK OFFICE

P.O. Box 1450
Alexandria, VA 22313 - 1450
www.uspto.gov

ELECTRONIC ACKNOWLEDGEMENT RECEIPT

APPLICATION #	RECEIPT DATE / TIME	ATTORNEY DOCKET #
16/876,579	**01/06/2022 12:24:14 PM ET**	**066.0141X1C9**

Title of Invention

APPARATUS, SYSTEM, AND METHOD FOR MULTI-BITRATE CONTENT STREAMING

Application Information

APPLICATION TYPE	Utility - Nonprovisional Application under 35 USC 111(a)	PATENT #	-
CONFIRMATION #	3720	FILED BY	Francene Stewart
PATENT CENTER #	60475006	FILING DATE	05/18/2020
CUSTOMER #	70560	FIRST NAMED INVENTOR	DAVID F. BRUECK
CORRESPONDENCE ADDRESS	-	AUTHORIZED BY	Brett Carlson

Documents

TOTAL DOCUMENTS: 9

DOCUMENT	PAGES	DESCRIPTION	SIZE (KB)
NPL1_20211222_REDACTED-ReaRebuttalReport_Redacted.pdf	83	Non Patent Literature	702 KB
NPL2a_20211222_REDACTED-RebuttalExpertReportOfKevinJeffayPhD.pdf	100	Non Patent Literature	1869 KB
NPL2b_20211222_REDACTED-RebuttalExpertReportOfKevinJeffayPhD.pdf	101	Non Patent Literature	1962 KB

NPL2c_20211222_REDACTED-RebuttalExpertReportOfKevinJeffayPhD.pdf	101	Non Patent Literature	886 KB
NPL2d_20211222_REDACTED-RebuttalExpertReportOfKevinJeffayPhD.pdf	94	Non Patent Literature	1329 KB
NPL3_20211208_REDACTED-RichardsonExpertReportOnInvalidity.pdf	152	Non Patent Literature	5679 KB
NPL4_REDACTED-ExpertReportOfRobertLStoll_Redacted.pdf	89	Non Patent Literature	1355 KB
20220106_IDS_066-0141X1C9.pdf	4	Information Disclosure Statement (IDS) Form (SB08)	1010 KB
20220106_IDSCertStmnt_066-0141X1C9.pdf	1	Transmittal Letter	100 KB

Digest

DOCUMENT	MESSAGE DIGEST(SHA-512)
NPL1_20211222_REDACTED-ReaRebuttalReport_Redacted.pdf	2A19CA82BD328F53807CE9845755B50B0ECC059E118BAA8B0533A872AD0EEB4186282A58EBDBE03F470A57D2B0065C0148568F9D1FBEBB0B5069D044F75E016C
NPL2a_20211222_REDACTED-RebuttalExpertReportOfKevinJeffayPhD.pdf	F09D1DCE0C3227B1D0F18C1C911049DC82D477D8CCAD1DA12F12B640E05C95271AE556F14EA3EA57FD7ABCABA181C8AE76EF828C82AD7D81B79CC0C4ED160117

NPL2b_20211222_REDACTED - RebuttalExpertReportOfKevinJeffayPhD.pdf	2F8269E463B3E00DEA6531BB9F902E4AE20620409AB45ED7421090D3C64BCDDECD4CCD689BB9978F0A0B87FB54DFAFB9220F4DB69A15C19CBB8B12AEDCDDF319
NPL2c_20211222_REDACTED - RebuttalExpertReportOfKevinJeffayPhD.pdf	3547136201C18E7BBEFFEDB34959EA7DA2BF9674FC7A7C47A868B7188EFDA8255F6EEC35FBC91A7FE8DB741F5C6DC4EFA1794F55367EB1C1668B53AE88786540
NPL2d_20211222_REDACTED - RebuttalExpertReportOfKevinJeffayPhD.pdf	6EAF8C951E579A657985031D39CA293CD5E4BFFCFEA65F4172AF105AC9061FF545DA9491A372A8A5A842EAEEFF9BEE71F2DC35A4784FF4F5865062991BBF4810
NPL3_20211208_REDACTED-RichardsonExpertReportOnInvalidity.pdf	D4FEF4C373F205F96EF9BFAB36858C5AC08233B268A031E1C637144D36903F49564E57BB5FB1E478574EB69C6D8F5556C9D5C958E1BBEB7241EFCC6A1CB62B06
NPL4_REDACTED-ExpertReportOfRobertLStoll_Redacted.pdf	A6876F703D651DC5A6675EBAD65A65104C2AD02FC57701779D794B734BA5BF34A9780F061C3716A267F27582D5A10173894778DD480B0ABB54C67A466F362AF1
20220106_IDS_066-0141X1C9.pdf	5E89CB65F89914CD210AE32212D796B73FB73630F28680A8BC876CEB8C0DC5BF4B0A8A6C217E69358BCA1CFC9C102E735C2164A4B185D63B741EC321E81C142B
20220106_IDSCertStmnt_066-0141X1C9.pdf	A344FCF8C60B922AA6623A9E5D14A4D59F7A86D18EC177736378D3486851AC4B865BB7CC33BE5A508F578F5A1CD9B999022FB61D0641EAE2F59BD8EF8C826BEC

This Acknowledgement Receipt evidences receipt on the noted date by the USPTO of the indicated documents, characterized by the applicant, and including page counts, where applicable. It serves as evidence of receipt similar to a Post Card, as described in MPEP 503.

New Applications Under 35 U.S.C. 111

If a new application is being filed and the application includes the necessary components for filing date (see 37 CFR 1.53(b)-(d) and MPEP 506), a Filing Receipt (37 CFR 1.54) will be issued in due course and the date shown on this Acknowledgement Receipt will establish the filing date of the application

National Stage of an International Application under 35 U.S.C. 371

If a timely submission to enter the national stage of an international application is compliant with the conditions of 35 U.S.C. 371 and other applicable requirements a Form PCT/DO/EO/903 indicating acceptance of the application as a national stage

submission under 35 U.S.C. 371 will be issued in addition to the Filing Receipt, in due course.

New International Application Filed with the USPTO as a Receiving Office

If a new international application is being filed and the international application includes the necessary components for an international filing date (see PCT Article 11 and MPEP 1810), a Notification of the International Application Number and of the International Filing Date (Form PCT/RO/105) will be issued in due course, subject to prescriptions concerning national security, and the date shown on this Acknowledgement Receipt will establish the international filing date of the application.

UNITED STATES
PATENT AND TRADEMARK OFFICE

P.O. Box 1450
Alexandria, VA 22313 - 1450
www.uspto.gov

ELECTRONIC PAYMENT RECEIPT

APPLICATION #	RECEIPT DATE / TIME	ATTORNEY DOCKET #
16/876,579	01/06/2022 12:24:14 PM ET	066.0141X1C9

Title of Invention

APPARATUS, SYSTEM, AND METHOD FOR MULTI-BITRATE CONTENT STREAMING

Application Information

APPLICATION TYPE	Utility - Nonprovisional Application under 35 USC 111(a)	PATENT #	-
CONFIRMATION #	3720	FILED BY	Francene Stewart
PATENT CENTER #	60475006	AUTHORIZED BY	Brett Carlson
CUSTOMER #	70560	FILING DATE	05/18/2020
CORRESPONDENCE ADDRESS	-	FIRST NAMED INVENTOR	DAVID F. BRUECK

Payment Information

PAYMENT METHOD	PAYMENT TRANSACTION ID	PAYMENT AUTHORIZED BY
CARD / 1269	E202216C24460057	Francene Stewart
PRE-AUTHORIZED ACCOUNT	PRE-AUTHORIZED CATEGORY	
502091	37 CFR 1.17 (Patent application and reexamination processing fees)	

FEE CODE	DESCRIPTION	ITEM PRICE($)	QUANTITY	ITEM TOTAL($)
1806	SUBMISSION OF AN INFORMATION DISCLOSURE STATEMENT	260.00	1	260.00
			TOTAL AMOUNT:	$260.00

This Acknowledgement Receipt evidences receipt on the noted date by the USPTO of the indicated documents, characterized by the applicant, and including page counts, where applicable. It serves as evidence of receipt similar to a Post Card, as described in MPEP 503.

New Applications Under 35 U.S.C. 111

If a new application is being filed and the application includes the necessary components for filing date (see 37 CFR 1.53(b)-(d) and MPEP 506), a Filing Receipt (37 CFR 1.54) will be issued in due course and the date shown on this Acknowledgement Receipt will establish the filing date of the application

National Stage of an International Application under 35 U.S.C. 371

If a timely submission to enter the national stage of an international application is compliant with the conditions of 35 U.S.C. 371 and other applicable requirements a Form PCT/DO/EO/903 indicating acceptance of the application as a national stage submission under 35 U.S.C. 371 will be issued in addition to the Filing Receipt, in due course.

New International Application Filed with the USPTO as a Receiving Office

If a new international application is being filed and the international application includes the necessary components for an international filing date (see PCT Article 11 and MPEP 1810), a Notification of the International Application Number and of the International Filing Date (Form PCT/RO/105) will be issued in due course, subject to prescriptions concerning national security, and the date shown on this Acknowledgement Receipt will establish the international filing date of the application.

PTO/SB/08a (02-18)
Approved for use through 11/30/2020. OMB 0651-0031
U.S. Patent and Trademark Office; U.S. DEPARTMENT OF COMMERCE
Under the Paperwork Reduction Act of 1995, no persons are required to respond to a collection of information unless it contains a valid OMB control number.

INFORMATION DISCLOSURE STATEMENT BY APPLICANT

(Not for submission under 37 CFR 1.99)

Application Number	16876579
Filing Date	2020-05-18
First Named Inventor	DAVID F. BRUECK
Art Unit	2454
Examiner Name	Chirag R. Patel
Attorney Docket Number	066.0141X1C9

U.S.PATENTS Remove

Examiner Initial*	Cite No	Patent Number	Kind Code[1]	Issue Date	Name of Patentee or Applicant of cited Document	Pages,Columns,Lines where Relevant Passages or Relevant Figures Appear
	1					

If you wish to add additional U.S. Patent citation information please click the Add button. Add

U.S.PATENT APPLICATION PUBLICATIONS Remove

Examiner Initial*	Cite No	Publication Number	Kind Code[1]	Publication Date	Name of Patentee or Applicant of cited Document	Pages,Columns,Lines where Relevant Passages or Relevant Figures Appear
	1					

If you wish to add additional U.S. Published Application citation information please click the Add button. Add

FOREIGN PATENT DOCUMENTS Remove

Examiner Initial*	Cite No	Foreign Document Number[3]	Country Code[2] i	Kind Code[4]	Publication Date	Name of Patentee or Applicant of cited Document	Pages,Columns,Lines where Relevant Passages or Relevant Figures Appear	T[5]
	1							

If you wish to add additional Foreign Patent Document citation information please click the Add button Add

NON-PATENT LITERATURE DOCUMENTS Remove

Examiner Initials*	Cite No	Include name of the author (in CAPITAL LETTERS), title of the article (when appropriate), title of the item (book, magazine, journal, serial, symposium, catalog, etc), date, pages(s), volume-issue number(s), publisher, city and/or country where published.	T[5]

INFORMATION DISCLOSURE STATEMENT BY APPLICANT (Not for submission under 37 CFR 1.99)		
	Application Number	16876579
	Filing Date	2020-05-18
	First Named Inventor	DAVID F. BRUECK
	Art Unit	2454
	Examiner Name	Chirag R. Patel
	Attorney Docket Number	066.0141X1C9

	1	Investigation No. 337-TA-1265: APPENDIX A TO EXPERT REPORT OF DR. IAIN RICHARDSON ON INVALIDITY: ANTICIPATION AND OBVIOUSNESS OVER CARMEL.	
	2	Investigation No. 337-TA-1265: APPENDIX B TO EXPERT REPORT OF DR. IAIN RICHARDSON ON INVALIDITY: ANTICIPATION AND OBVIOUSNESS OVER AKIYAMA.	
	3	Investigation No. 337-TA-1265: APPENDIX C-1 TO EXPERT REPORT OF DR. IAIN RICHARDSON ON INVALIDITY: ANTICIPATION AND OBVIOUSNESS OVER REALNETWORKS	
	4	Investigation No. 337-TA-1265: APPENDIX C-2 TO EXPERT REPORT OF DR. IAIN RICHARDSON ON INVALIDITY: REALNETWORKS EXPERIMENTATION	
	5	Investigation No. 337-TA-1265: APPENDIX D TO EXPERT REPORT OF DR. IAIN RICHARDSON ON INVALIDITY: ANTICIPATION AND OBVIOUSNESS OVER KLEMETS	
	6	Investigation No. 337-TA-1265: EXHIBIT E TO EXPERT REPORT OF DR. IAIN RICHARDSON ON INVALIDITY: ANTICIPATION AND OBVIOUSNESS OVER OPLAYO	
	7	Investigation No. 337-TA-1265: APPENDIX F TO EXPERT REPORT OF DR. IAIN RICHARDSON ON INVALIDITY: ANTICIPATION AND OBVIOUSNESS OVER KIKUCHI	
	8	Investigation No. 337-TA-1265: APPENDIX G TO EXPERT REPORT OF DR. IAIN RICHARDSON ON INVALIDITY: ANTICIPATION AND OBVIOUSNESS OVER TAKEMURA	
	9	Investigation No. 337-TA-1265: APPENDIX H TO EXPERT REPORT OF DR. IAIN RICHARDSON ON INVALIDITY: PUBLIC USE [Redacted]	
	10	Investigation No. 337-TA-1265: Exhibit 1 Dr. Iain Richardson curriculum vitae Dec21.	
	11	Investigation No. 337-TA-1265: RICHARDSON REPORT EXHIBIT 3: MATERIALS CONSIDERED	

INFORMATION DISCLOSURE STATEMENT BY APPLICANT (Not for submission under 37 CFR 1.99)	Application Number	16876579
	Filing Date	2020-05-18
	First Named Inventor	DAVID F. BRUECK
	Art Unit	2454
	Examiner Name	Chirag R. Patel
	Attorney Docket Number	066.0141X1C9

	12	Investigation No. 337-TA-1265: Appendix A To Supplemental Expert Report if Dr. Iain Richardson [Redacted]	
	13	Investigation No. 337-TA-1265: SUPPLEMENTAL EXPERT REPORT OF ROBERT L. STOLL	
	14	Investigation No. 337-TA-1265: SUPPLEMENTAL EXPERT REPORT OF DR. IAIN RICHARDSON ON INVALIDITY [Redacted]	
	15	Investigation No. 337-TA-1265: SUPPLEMENTAL REBUTTAL EXPERT REPORT OF KEVIN JEFFAY, PHD., REGARDING VALIDITY [Redacted]	
	16	Investigation No. 337-TA-1265: SUPPLEMENTAL REBUTTAL EXPERT REPORT OF TERESA STANEK REA [Redacted]	

If you wish to add additional non-patent literature document citation information please click the Add button Add

EXAMINER SIGNATURE

Examiner Signature		Date Considered	

*EXAMINER: Initial if reference considered, whether or not citation is in conformance with MPEP 609. Draw line through a citation if not in conformance and not considered. Include copy of this form with next communication to applicant.

[1] See Kind Codes of USPTO Patent Documents at www.USPTO.GOV or MPEP 901.04. [2] Enter office that issued the document, by the two-letter code (WIPO Standard ST.3). [3] For Japanese patent documents, the indication of the year of the reign of the Emperor must precede the serial number of the patent document. [4] Kind of document by the appropriate symbols as indicated on the document under WIPO Standard ST.16 if possible. [5] Applicant is to place a check mark here if English language translation is attached.

INFORMATION DISCLOSURE STATEMENT BY APPLICANT (Not for submission under 37 CFR 1.99)	Application Number	16876579
	Filing Date	2020-05-18
	First Named Inventor	DAVID F. BRUECK
	Art Unit	2454
	Examiner Name	Chirag R. Patel
	Attorney Docket Number	066.0141X1C9

CERTIFICATION STATEMENT

Please see 37 CFR 1.97 and 1.98 to make the appropriate selection(s):

That each item of information contained in the information disclosure statement was first cited in any communication from a foreign patent office in a counterpart foreign application not more than three months prior to the filing of the information disclosure statement. See 37 CFR 1.97(e)(1).

OR

☐ That no item of information contained in the information disclosure statement was cited in a communication from a foreign patent office in a counterpart foreign application, and, to the knowledge of the person signing the certification after making reasonable inquiry, no item of information contained in the information disclosure statement was known to any individual designated in 37 CFR 1.56(c) more than three months prior to the filing of the information disclosure statement. See 37 CFR 1.97(e)(2).

☒ See attached certification statement.

The fee set forth in 37 CFR 1.17 (p) has been submitted herewith.

A certification statement is not submitted herewith.

SIGNATURE

A signature of the applicant or representative is required in accordance with CFR 1.33, 10.18. Please see CFR 1.4(d) for the form of the signature.

Signature	/BRETT A. CARLSON/	Date (YYYY-MM-DD)	2022-01-26
Name/Print	Brett A. Carlson	Registration Number	39928

This collection of information is required by 37 CFR 1.97 and 1.98. The information is required to obtain or retain a benefit by the public which is to file (and by the USPTO to process) an application. Confidentiality is governed by 35 U.S.C. 122 and 37 CFR 1.14. This collection is estimated to take 1 hour to complete, including gathering, preparing and submitting the completed application form to the USPTO. Time will vary depending upon the individual case. Any comments on the amount of time you require to complete this form and/or suggestions for reducing this burden, should be sent to the Chief Information Officer, U.S. Patent and Trademark Office, U.S. Department of Commerce, P.O. Box 1450, Alexandria, VA 22313-1450. DO NOT SEND FEES OR COMPLETED FORMS TO THIS ADDRESS. **SEND TO: Commissioner for Patents, P.O. Box 1450, Alexandria, VA 22313-1450.**

Privacy Act Statement

The Privacy Act of 1974 (P.L. 93-579) requires that you be given certain information in connection with your submission of the attached form related to a patent application or patent. Accordingly, pursuant to the requirements of the Act, please be advised that: (1) the general authority for the collection of this information is 35 U.S.C. 2(b)(2); (2) furnishing of the information solicited is voluntary; and (3) the principal purpose for which the information is used by the U.S. Patent and Trademark Office is to process and/or examine your submission related to a patent application or patent. If you do not furnish the requested information, the U.S. Patent and Trademark Office may not be able to process and/or examine your submission, which may result in termination of proceedings or abandonment of the application or expiration of the patent.

The information provided by you in this form will be subject to the following routine uses:

1. The information on this form will be treated confidentially to the extent allowed under the Freedom of Information Act (5 U.S.C. 552) and the Privacy Act (5 U.S.C. 552a). Records from this system of records may be disclosed to the Department of Justice to determine whether the Freedom of Information Act requires disclosure of these record s.

2. A record from this system of records may be disclosed, as a routine use, in the course of presenting evidence to a court, magistrate, or administrative tribunal, including disclosures to opposing counsel in the course of settlement negotiations.

3. A record in this system of records may be disclosed, as a routine use, to a Member of Congress submitting a request involving an individual, to whom the record pertains, when the individual has requested assistance from the Member with respect to the subject matter of the record.

4. A record in this system of records may be disclosed, as a routine use, to a contractor of the Agency having need for the information in order to perform a contract. Recipients of information shall be required to comply with the requirements of the Privacy Act of 1974, as amended, pursuant to 5 U.S.C. 552a(m).

5. A record related to an International Application filed under the Patent Cooperation Treaty in this system of records may be disclosed, as a routine use, to the International Bureau of the World Intellectual Property Organization, pursuant to the Patent Cooperation Treaty.

6. A record in this system of records may be disclosed, as a routine use, to another federal agency for purposes of National Security review (35 U.S.C. 181) and for review pursuant to the Atomic Energy Act (42 U.S.C. 218(c)).

7. A record from this system of records may be disclosed, as a routine use, to the Administrator, General Services, or his/her designee, during an inspection of records conducted by GSA as part of that agency's responsibility to recommend improvements in records management practices and programs, under authority of 44 U.S.C. 2904 and 2906. Such disclosure shall be made in accordance with the GSA regulations governing inspection of records for this purpose, and any other relevant (i.e., GSA or Commerce) directive. Such disclosure shall not be used to make determinations about individuals.

8. A record from this system of records may be disclosed, as a routine use, to the public after either publication of the application pursuant to 35 U.S.C. 122(b) or issuance of a patent pursuant to 35 U.S.C. 151. Further, a record may be disclosed, subject to the limitations of 37 CFR 1.14, as a routine use, to the public if the record was filed in an application which became abandoned or in which the proceedings were terminated and which application is referenced by either a published application, an application open to public inspections or an issued patent.

9. A record from this system of records may be disclosed, as a routine use, to a Federal, State, or local law enforcement agency, if the USPTO becomes aware of a violation or potential violation of law or regulation.

UNITED STATES
PATENT AND TRADEMARK OFFICE

P.O. Box 1450
Alexandria, VA 22313 - 1450
www.uspto.gov

ELECTRONIC ACKNOWLEDGEMENT RECEIPT

APPLICATION #	RECEIPT DATE / TIME	ATTORNEY DOCKET #
16/876,579	**01/26/2022 11:52:56 AM ET**	**066.0141X1C9**

Title of Invention

APPARATUS, SYSTEM, AND METHOD FOR MULTI-BITRATE CONTENT STREAMING

Application Information

APPLICATION TYPE	Utility - Nonprovisional Application under 35 USC 111(a)	PATENT #	-
CONFIRMATION #	3720	FILED BY	Francene Stewart
PATENT CENTER #	60504121	FILING DATE	05/18/2020
CUSTOMER #	70560	FIRST NAMED INVENTOR	DAVID F. BRUECK
CORRESPONDENCE ADDRESS	-	AUTHORIZED BY	Brett Carlson

Documents

TOTAL DOCUMENTS: 18

DOCUMENT	PAGES	DESCRIPTION	SIZE (KB)
20220126_IDS_066-0141X1C9.pdf	5	Information Disclosure Statement (IDS) Form (SB08)	1011 KB
20220126_IDSCertStmnt_066-0141X1C9.pdf	1	Transmittal Letter	95 KB
NPL_20211208-AppendixA_Carmel.pdf	153	Non Patent Literature	1945 KB
NPL_20211208-AppendixB_Akiyama.pdf	68	Non Patent Literature	443 KB
NPL_20211208-AppendixC-1_RealNetworks.pdf	120	Non Patent Literature	5128 KB

NPL_20211208-AppendixC-2_RealNetworksTesting.pdf	27	Non Patent Literature	3944 KB
NPL_20211208-AppendixD_Klemets.pdf	69	Non Patent Literature	390 KB
NPL_20211208-AppendixE_Oplayo.pdf	128	Non Patent Literature	2307 KB
NPL_20211208-AppendixF_Kikuchi.pdf	66	Non Patent Literature	421 KB
NPL_20211208-AppendixG_Takemura.pdf	39	Non Patent Literature	329 KB
NPL_20211208-AppendixH_PublicUseCBI_Redacted.pdf	40	Non Patent Literature	310 KB
NPL_20211208-Ex01_IainRichardson_cv_Dec21.pdf	10	Non Patent Literature	144 KB
NPL_20211208-Ex03_MaterialsConsidered.pdf	8	Non Patent Literature	112 KB
NPL_20220120-AppendixAToSupplExpertReportIainRichardson_Redacted.pdf	2	Non Patent Literature	86 KB
NPL_20220120-SupplementalExpertOfRobertLStoll.pdf	9	Non Patent Literature	1507 KB
NPL_20220120-SupplExpertReportOfIainRichardson_Redacted.pdf	13	Non Patent Literature	251 KB

NPL_20220124-SupplementalRebuttalExpertReportOfKevinJeffay-FS_Redacted.pdf	16	Non Patent Literature	373 KB
NPL_20220124-SupplementalRebuttalExpertReportOfTeresaStanekRea-FS_Redacted.pdf	21	Non Patent Literature	294 KB

Digest

DOCUMENT	MESSAGE DIGEST(SHA-512)
20220126_IDS_066-0141X1C9.pdf	136DFD5565D4CD34EEEDB0B2AC1760268BC2F4619AC8FFC200B9D7B1777E8A0F0102280F2D148D6FB971D2CEF0E6B9E135550313C5F2A40072826416BB6C3912
20220126_IDSCertStmnt_066-0141X1C9.pdf	A46978ACCF0545AD6B815EB88C16DDE1C3102B50E69A89F6368C0BDA724BFC0F368F37D6404B2A261AEC12DE92BC213FABDBB889239E7ED0A474D5226E6ABDF2
NPL_20211208-AppendixA_Carmel.pdf	769CD218A6B2B26E08C64C30646CBAACCF209EEB214677240201008750F67487AD7DF6BAD6B36534EDF8E40FB17996E2907B0CCB9DE4952BDB0CDF1B7E34681C
NPL_20211208-AppendixB_Akiyama.pdf	71A5C5FD3D3E7F43C7FAE86DA2FBCDF6709D178CDB2202BD819DEE7BC2CE7B10FABA13E443BDDF531CEF8AD2E188A13885800A82FC391AD5B72A729D457034E2
NPL_20211208-AppendixC-1_RealNetworks.pdf	A0E1118C747B953D50E5B4E906DF7FA57406C6D4D0978C74157CA2825BD64E639B4BB9728231B337BDABBE80E82A40C7353D93688B301F09325263199FE38AD5
NPL_20211208-AppendixC-2_RealNetworksTesting.pdf	47560A1849C6C148666ADD067079ECB98D06849EEF2ACE533D5214DDE6920DDA2452C8ECFD0EDA93C1F31603ABA08663966DE1497672D58010E1F3240EC240CD

NPL_20211208-AppendixD_Klemets.pdf	460886786FBC7BFD2A996386ECF688FF40FAEA79CCEAF5813A03D9B2E37EBF45C223B74402B816307E03AEB1E4AB7B0CA1243A13CCF1175D9BCBE9FF8A274ED8
NPL_20211208-AppendixE_Oplayo.pdf	586E394656DE9C0B57EEE57B06E44D785492C45682557DC77A9C2E1FD4B721242713CB3112C064B23C2E3039EA602A9FD7D700A05030666B4AC0BAD137E831D3
NPL_20211208-AppendixF_Kikuchi.pdf	88024E6CCDBB5529D6AF8B8D63FAA45DF97FAE4D5B098CA1CA36B02B49DD55BC94D476EF5718593A43C57363845E1BCAEF7B17FC05BDA2B23C499008C157590C
NPL_20211208-AppendixG_Takemura.pdf	6193FDAD8B9606D245C9AE802401C46056E5D61FFEF9553DEA989FE6DA546A77E79C61A88768752F3231CEF2587C1913EDB457FAE03114AED68BE0D75655EF09
NPL_20211208-AppendixH_PublicUseCBI_Redacted.pdf	4FAEE2DB82E19868C62149CAB15DED56C22ABD7A8B37C06872B32E75E2FF93CEAD436667C92F23BE86CB5ED2C103120B153BECC2311B616E11F17EAA56D448F3
NPL_20211208-Ex01_IainRichardson_cv_Dec21.pdf	2A055A2D5D027456C4B304C21F3DCC8A007D1028F4995C9E9609206647B938108AFBC2D6DA1AF470A8A93D4925C4FD711C5992D8769C2867C3295BBA5F228527
NPL_20211208-Ex03_MaterialsConsidered.pdf	1CCDD4A6B27164CF8A6DDCEF1977B72EF51AB1BD053B071847C1579FF5BCD497B896FC63DB8502BD03A73019EBD77EBCCB04751828 3DF9F519148163C61BF6D3
NPL_20220120-AppendixAToSupplExpertReportIainRichardson_Redacted.pdf	47CCA1D049F46405A31C8D8324B56C45C64A992AED47928FA58361EA033D3867E9708EC6871A473B9A3CC28C2C9B75E6B71B1DDBBE20EE9BA07E06AE3ECF96EF
NPL_20220120-SupplementalExpertOfRobertLStoll.pdf	81C780DD6775A5C9FE5BE978CBCD23F9767EEA7303AD0C1758550CE0ED77080539CA83185C801BBF11B424675EE4778DDFF8FBA02A3658EB6D2A9428C74A5D9B
NPL_20220120-SupplExpertReportOfIainRichardson_Redacted.pdf	9DCB9AC82B994B938593549FCCCC8B42EC522856062E56FB20425B019E7A5CF5403DF89F30255503452A97D5BA28FE4A636EB458E703AC2FDAAC40EFC4E6FBA3

NPL_20220124-SupplementalRebuttalExpertReportOfKevinJeffay-FS_Redacted.pdf	01A13FC3781F1B8531B6A77789D230DFCC5030068BC145C7734D646346225D21C641CBC3C2F80DA42F3CD9851966D6DD79385E32FE50A0A5FB2926C4D67940F0
NPL_20220124-SupplementalRebuttalExpertReportOfTeresaStanekRea-FS_Redacted.pdf	BEB80D64565C746953C03A521DE05C9507830E8A99E9406598163444F8CFD47E1E1E5B4025E3C1A36C1308903F4416FA59B5F7330B48DCDD73B86DC9EB32F791

This Acknowledgement Receipt evidences receipt on the noted date by the USPTO of the indicated documents, characterized by the applicant, and including page counts, where applicable. It serves as evidence of receipt similar to a Post Card, as described in MPEP 503.

New Applications Under 35 U.S.C. 111

If a new application is being filed and the application includes the necessary components for filing date (see 37 CFR 1.53(b)-(d) and MPEP 506), a Filing Receipt (37 CFR 1.54) will be issued in due course and the date shown on this Acknowledgement Receipt will establish the filing date of the application

National Stage of an International Application under 35 U.S.C. 371

If a timely submission to enter the national stage of an international application is compliant with the conditions of 35 U.S.C. 371 and other applicable requirements a Form PCT/DO/EO/903 indicating acceptance of the application as a national stage submission under 35 U.S.C. 371 will be issued in addition to the Filing Receipt, in due course.

New International Application Filed with the USPTO as a Receiving Office

If a new international application is being filed and the international application includes the necessary components for an international filing date (see PCT Article 11 and MPEP 1810), a Notification of the International Application Number and of the International Filing Date (Form PCT/RO/105) will be issued in due course, subject to prescriptions concerning national security, and the date shown on this Acknowledgement Receipt will establish the international filing date of the application.

IDS CERTIFICATION STATEMENTS

I. THIS IDS IS BEING FILED UNDER 37 C.F.R. 1.97(b): (check one box)

☐ Within three months of the filing date of a national application other than a continued prosecution application under 1.53(d).

☐ Within three months of the date of entry of the national stage as set forth in 1.491 in an international application.

☐ Before the mailing date of a first Office Action on the merits. In the event that a first Office Action on the merits has been mailed, please consider this IDS under 37 C.F.R. 1.97(c) and see the statement under 1.97(e) **or** charge deposit account 50-2091 the fee specified by 37 C.F.R. 1.17(p) if such statement is not selected in Section IV.

☐ Before the mailing of a first Office Action after the filing of a request for continued examination under 1.114.

II. THIS IDS IS BEING FILED UNDER 37 C.F.R. 1.97(c):

☐ After the period specified in 37 C.F.R. 1.97(b) and before the mailing date of any of a final action under 1.113, a notice of allowance under 1.311 or an action that otherwise closes prosecution in the application, and accompanied by:

- ☐ a statement specified in 1.97(e) as subsequently provided in this IDS; or
- ☐ the fee set forth in 1.17(p).

III. THIS IDS IS BEING FILED UNDER 37 C.F.R. 1.97(d):

☑ After the period specified in 37 C.F.R. 1.97(c) and on or after the mailing date of any of a final action under 1.113, a notice of allowance under 1.311 or an action that otherwise closes prosecution in the application, but before or simultaneous with payment of the issue fee, and accompanied by a statement specified in 1.97(e) as subsequently provided in this IDS **and** the fee set forth in 1.17(p).

IV. Statement under 37 C.F.R. 1.97(e) (check only one box)

The undersigned hereby states that:

☐ Each item of information contained in the IDS was first cited in any communication from a foreign patent office in a counterpart foreign application not more than three months prior to the filing of this IDS.

☑ No item of information contained in the IDS was cited in a communication from a foreign patent office in a counterpart foreign application, and, to knowledge of the person signing the certification after making reasonable inquiry, no item of information contained in the IDS was known to any individual designated in 37 C.F.R. 1.56(c) more than three months prior to the filing of this IDS.

V. Statement under 37 C.F.R. §1.704(d):

☐ The undersigned hereby states that each item of information contained in the information disclosure statement: (i) was first cited in any communication from a patent office in a counterpart foreign or international application or from the Office, and this communication was not received by any individual designated in § 1.56(c) more than thirty days prior to the filing of the information disclosure statement; or (ii) is a communication that was issued by a patent office in a counterpart foreign or international application or by the Office, and this communication was not received by any individual designated in § 1.56(c) more than thirty days prior to the filing of the information disclosure statement..

VI. CONCLUSION

It is respectfully submitted that the claims presently on file patently distinguish the present invention from each of the references cited in this IDS. The references cited in this IDS are being cited only in the interest of candor and without any admission that they constitute statutory prior art or contain matter which anticipates the invention or which would render the same obvious, either singly or in a combination, to a person of ordinary skill in the art. Furthermore the filing of this IDS should not be construed to be an admission that the information cited in this IDS is, or is considered to be, material to patentability as defined in 1.56(b). In addition, the filing of this IDS should not be construed as a representation that a search has been made.

If the Examiner has any questions concerning this IDS, the Examiner is requested to contact the undersigned at the telephone number associated with Customer No. 70560 . If it is determined that this IDS has been filed under the wrong rule, the PTO is requested to consider this IDS under the proper rule, with a petition if necessary, and charge the appropriate fee to Deposit Account No. 50-2091.

UNITED STATES
PATENT AND TRADEMARK OFFICE

P.O. Box 1450
Alexandria, VA 22313 - 1450
www.uspto.gov

ELECTRONIC PAYMENT RECEIPT

APPLICATION #	RECEIPT DATE / TIME	ATTORNEY DOCKET #
16/876,579	01/26/2022 11:52:56 AM ET	066.0141X1C9

Title of Invention

APPARATUS, SYSTEM, AND METHOD FOR MULTI-BITRATE CONTENT STREAMING

Application Information

APPLICATION TYPE	Utility - Nonprovisional Application under 35 USC 111(a)	PATENT #	-
CONFIRMATION #	3720	FILED BY	Francene Stewart
PATENT CENTER #	60504121	AUTHORIZED BY	Brett Carlson
CUSTOMER #	70560	FILING DATE	05/18/2020
CORRESPONDENCE ADDRESS	-	FIRST NAMED INVENTOR	DAVID F. BRUECK

Payment Information

PAYMENT METHOD	PAYMENT TRANSACTION ID	PAYMENT AUTHORIZED BY
CARD / 1269	E20221PB53331526	Francene Stewart
PRE-AUTHORIZED ACCOUNT	PRE-AUTHORIZED CATEGORY	
502091	37 CFR 1.17 (Patent application and reexamination processing fees); 37 CFR 1.21 (Miscellaneous fees and charges)	

FEE CODE	DESCRIPTION	ITEM PRICE($)	QUANTITY	ITEM TOTAL($)
1806	SUBMISSION OF AN INFORMATION DISCLOSURE STATEMENT	260.00	1	260.00
			TOTAL AMOUNT:	$260.00

This Acknowledgement Receipt evidences receipt on the noted date by the USPTO of the indicated documents, characterized by the applicant, and including page counts, where applicable. It serves as evidence of receipt similar to a Post Card, as described in MPEP 503.

New Applications Under 35 U.S.C. 111

If a new application is being filed and the application includes the necessary components for filing date (see 37 CFR 1.53(b)-(d) and MPEP 506), a Filing Receipt (37 CFR 1.54) will be issued in due course and the date shown on this Acknowledgement

Receipt will establish the filing date of the application

National Stage of an International Application under 35 U.S.C. 371

If a timely submission to enter the national stage of an international application is compliant with the conditions of 35 U.S.C. 371 and other applicable requirements a Form PCT/DO/EO/903 indicating acceptance of the application as a national stage submission under 35 U.S.C. 371 will be issued in addition to the Filing Receipt, in due course.

New International Application Filed with the USPTO as a Receiving Office

If a new international application is being filed and the international application includes the necessary components for an international filing date (see PCT Article 11 and MPEP 1810), a Notification of the International Application Number and of the International Filing Date (Form PCT/RO/105) will be issued in due course, subject to prescriptions concerning national security, and the date shown on this Acknowledgement Receipt will establish the international filing date of the application.

UNITED STATES PATENT AND TRADEMARK OFFICE

UNITED STATES DEPARTMENT OF COMMERCE
United States Patent and Trademark Office
Address: COMMISSIONER FOR PATENTS
P.O. Box 1450
Alexandria, Virginia 22313-1450
www.uspto.gov

APPLICATION NO.	FILING DATE	FIRST NAMED INVENTOR	ATTORNEY DOCKET NO.	CONFIRMATION NO.
16/876,579	05/18/2020	DAVID F. BRUECK	066.0141X1C9	3720

70560 7590 02/02/2022
LKGLOBAL (Dish Technologies L.L.C.)
7010 E. COCHISE ROAD
SCOTTSDALE, AZ 85253

EXAMINER
PATEL, CHIRAG R

ART UNIT	PAPER NUMBER
2454	

NOTIFICATION DATE	DELIVERY MODE
02/02/2022	ELECTRONIC

Please find below and/or attached an Office communication concerning this application or proceeding.

The time period for reply, if any, is set in the attached communication.

Notice of the Office communication was sent electronically on above-indicated "Notification Date" to the following e-mail address(es):

dish@lkglobal.com
ipdept@dish.com

Corrected *Notice of Allowability*	**Application No.** 16/876,579	**Applicant(s)** BRUECK et al.	
	Examiner CHIRAG R PATEL	**Art Unit** 2454	**AIA (FITF) Status** No

-- The MAILING DATE of this communication appears on the cover sheet with the correspondence address--

All claims being allowable, PROSECUTION ON THE MERITS IS (OR REMAINS) CLOSED in this application. If not included herewith (or previously mailed), a Notice of Allowance (PTOL-85) or other appropriate communication will be mailed in due course. **THIS NOTICE OF ALLOWABILITY IS NOT A GRANT OF PATENT RIGHTS.** This application is subject to withdrawal from issue at the initiative of the Office or upon petition by the applicant. See 37 CFR 1.313 and MPEP 1308.

1. ☑ This communication is responsive to the printer rush on January 12, 2022.
   ☐ A declaration(s)/affidavit(s) under **37 CFR 1.130(b)** was/were filed on _____.

2. ☐ An election was made by the applicant in response to a restriction requirement set forth during the interview on _____; the restriction requirement and election have been incorporated into this action.

3. ☑ The allowed claim(s) is/are 1-30 . As a result of the allowed claim(s), you may be eligible to benefit from the **Patent Prosecution Highway** program at a participating intellectual property office for the corresponding application. For more information, please see **http://www.uspto.gov/patents/init_events/pph/index.jsp** or send an inquiry to **PPHfeedback@uspto.gov.**

4. ☐ Acknowledgment is made of a claim for foreign priority under 35 U.S.C. § 119(a)-(d) or (f).

   Certified copies:

   a) ☐ All b) ☐ Some* c) ☐ None of the:

   1. ☐ Certified copies of the priority documents have been received.
   2. ☐ Certified copies of the priority documents have been received in Application No. _____ .
   3. ☐ Copies of the certified copies of the priority documents have been received in this national stage application from the International Bureau (PCT Rule 17.2(a)).

   * Certified copies not received: _____ .

Applicant has THREE MONTHS FROM THE "MAILING DATE" of this communication to file a reply complying with the requirements noted below. Failure to timely comply will result in ABANDONMENT of this application.
THIS THREE-MONTH PERIOD IS NOT EXTENDABLE.

5. ☐ CORRECTED DRAWINGS (as "replacement sheets") must be submitted.
   ☐ including changes required by the attached Examiner's Amendment / Comment or in the Office action of Paper No./Mail Date _____ .

   Identifying indicia such as the application number (see 37 CFR 1.84(c)) should be written on the drawings in the front (not the back) of each sheet. Replacement sheet(s) should be labeled as such in the header according to 37 CFR 1.121(d).

6. ☐ DEPOSIT OF and/or INFORMATION about the deposit of BIOLOGICAL MATERIAL must be submitted. Note the attached Examiner's comment regarding REQUIREMENT FOR THE DEPOSIT OF BIOLOGICAL MATERIAL.

Attachment(s)

1. ☐ Notice of References Cited (PTO-892)
2. ☑ Information Disclosure Statements (PTO/SB/08), Paper No./Mail Date 1/6/22.
3. ☐ Examiner's Comment Regarding Requirement for Deposit of Biological Material _____.
4. ☐ Interview Summary (PTO-413), Paper No./Mail Date. _____.
5. ☐ Examiner's Amendment/Comment
6. ☑ Examiner's Statement of Reasons for Allowance
7. ☐ Other _____.

/CHIRAG R PATEL/
Primary Examiner, Art Unit 2454

DISH EXHIBIT 2002, Page 1263
Aylo Freesites Ltd. v. Dish Technologies L.L.C.
IPR2024-00047

Notice of Pre-AIA or AIA Status

The present application is being examined under the pre-AIA first to invent provisions.

Allowable Subject Matter

Claims 1-30 are allowed.

The following is an examiner's statement of reasons for allowance: Examiner presents an overview of the Carmel et al. (US 6,389,473) as argued in litigation. Carmel teaches dividing a stream into a sequence of files, the files having a predetermined data size and encoding each file into a corresponding sequence of file, each having the own index and uploading to a server equal to the data rate of the stream. A review of Carmel teaches each slice duration is different as the slice duration of the split up files are different and can be adjusted as Carmel discloses per Col 9 lines 39-48, as the slice duration is adjusted based upon the link bandwidth.

Carmel "Col 9 lines 39-48, "Preferably, computer 34 monitors the rate of data being transmitted over each of links 60, 62, 64, etc., and allocates files 42, 44, 46, 48, etc., according to the data rates. The sizes of the files may be varied by adjusting slice durations T.sub.1, T.sub.2, T.sub.3, etc., and a relatively greater volume of data may be transmitted through links exhibiting relatively greater data rates."

This teaches away from the current claim language where each duration is of a fixed length, not a fixed size with variable duration that can be adjusted based on the current bandwidth, as shown above, as taught by Carmel. A POSITA would know that a higher quality streamlet would be a larger file, as in the number of bytes or megabytes, than a lower quality streamlet for a given duration (1 second, 5 seconds, 1 minute) and the size would not be a predetermined data size as taught by Carmel. Carmel shows this concepts per the disclosure on Col 8 line 56 – Col 9 line 5.

Carmel, Col 8 line 56- Col 9 line 5, ". Size identifier 61 describes the size of those slices in stream 41 that have a fixed size associated therewith, wherein typically the size (or the corresponding resolution) of the level #1 video slices is smaller than that of the level #2 slices."

Carmel shows a relationship between the quality of the compressed audio data, at 2KB per second at a specified quality level, and a variable duration of time which is dependent upon the link bandwidths per Col 11 lines 53-64 and Col 12 lines 3-6,

Carmel, Col 11 lines 53-64, "Similarly, at a set duration step 92, slice durations T.sub.1, T.sub.2, T.sub.3, etc., are optionally adjusted responsive to the link bandwidths. Initially, duration T.sub.1 of slice 1 for file 42 is set to a default value, typically between 1 and 5 sec. For example, to transfer compressed audio data at 2 Kbytes/sec, file 42 may be assigned a file size of 10 Kbytes, with T.sub.1 =5 sec."

Col 12 lines 3-6, "9) Frequently, however, this will not be the case, and the FTP upload rate over link 60 will fluctuate and may be slower than 2 Kbyte/sec. At step 88 (FIG. 5), the time required to upload file 42 is measured and compared to T.sub.1, at the same time as file 44 (slice 2) is being encoded and prepared. Responsive to this measurement of upload time, the duration of subsequent slices, for example, times T.sub.3 and T.sub.4 for files 46 and 48, respectively, is adjusted. "

This teaches away from applicants claim language in which each streamlet is a fixed time duration, having a same time index or same duration, as claimed as opposed to a predetermined data size with variable duration based on bandwidth as taught by Carmel.

Claims: '473 application, "<u>each of the sets have the same time index as their corresponding raw streamlet such that the encoded streamlets of the same set independently yield on playback the same portion of the video</u>,"

and per the instant application claims , "<u>the first streamlet of each of the groups of streamlets has the same first duration and encodes the same first portion of the video</u>"

Carmel also states that when the computer connects to the server and begins to download the stream, it reads the "index file" to determine what duration in the stream to start streaming the duration and moves the indicator to the point that where it will start streaming. Carmel also teach that each time slice in stream includes multidata at multiple quality levels as disclosed per Col 8 line 56- 67.

Carmel, Col 8 lines 56-67, "Each time slice in stream 41 includes multimedia data at multiple quality levels." Fig. 3D shows that the multiple portion of the level are in 1 packet which consist of a header, Audio level #1, Audio level #2 of multiple slices."

The client can select one of the available quality level based on the bandwidth in the stream. Carmel also teaches a multilevel stream which includes multimedia data at multiple quality levels which consists of audio and video data at level 1 and at level 2. Examiner does not see any disclosure in Carmel that relate to separate files being requested with the multilevel stream as shown in Fig. 3D and the streams consist of headers of the audio and video quality files in stream 41,header, 43, audio level #1, audio level #2, video level #1, Video level #2, as part of a packet which includes a header. There are no concepts taught in Carmel that talks about splitting packet into multiple files and sending only that requested portion of the separate content file as requested by the end-user station at multiple file quality levels of the same duration as claimed for the '483' application as in litigation. More specifically, a thorough review of the prior art fails to teach for the '483' application, (and similar limitations for all the other continuations in the family)

"an encoding module configured to encode each raw streamlet to generate, for each of said raw streamlets, a set including an encoded streamlet for each bitrate supported by the multi-bitrate content streaming, wherein each of the encoded streamlets in each of the sets is stored as a separate content file, wherein the encoded streamlets within each of the sets have the same time index as their corresponding raw streamlet such that the encoded streamlets of the same set independently yield on playback the same portion of the video, wherein the separate content files within each of the sets are independently requestable by end user stations, and wherein shifts between the different bit rates are made at the time indexes during streaming of each of the videos; and a web server to be coupled over the Internet to the end user station stations to receive requests from the end user stations for different ones of the separate content files from different ones of the sets and to transmit the requested ones of the separate content files to the requesting one of the end user stations, wherein each of the end user stations initiate each of the shifts between the different bit rates during streaming of each of the videos through a request for the separate content file storing a different bit rate one of the encoded streamlets for a subsequent one of the time indexes"

While a thorough review of the references teaches portions of the claim language which relate to splitting the stream into a sequence of files, and selecting a quality of the stream by using an index to determine the start portion of streaming, and a multi-level stream, it fails to teach or render obvious, as claimed with this current application,

"wherein at least one of the low quality stream, the medium quality stream, and the high quality stream is encoded at a bitrate of no less than 600 kbps; and wherein the first streamlet of each of the groups of streamlets has the same first duration and encodes the same first portion

of the video in each of the low quality stream, the medium quality stream, and the high quality stream, and wherein the first streamlet of the low quality stream encodes the same first portion of the video at a different bitrate than the first streamlet of the high quality stream and the first streamlet of the medium quality stream."

Any comments considered necessary by applicant must be submitted no later than the payment of the issue fee and, to avoid processing delays, should preferably accompany the issue fee. Such submissions should be clearly labeled "Comments on Statement of Reasons for Allowance."

Conclusion

Any inquiry concerning this communication or earlier communications from the examiner should be directed to Chirag R Patel whose telephone number is (571)272-7966. The examiner can normally be reached on Monday to Friday from 8:00AM to 4:30PM. If attempts to reach the examiner by telephone are unsuccessful, the examiner's supervisor, Glenton Burgess, can be reached on 571-272-3949. The fax phone number for the organization where this application or proceeding is assigned is 571-273-8300.

Information regarding the status of an application may be obtained from the Patent Application Information Retrieval (PAIR) system. Status information for published applications may be obtained from either Private PAIR or Public PAIR. Status information for unpublished applications is available through Private PAIR only. For more information about the PAIR system, see http://pairdirect.uspto.gov. Should you have questions on access to the Private PAIR system, contact the Electronic Business Center (EBC) at 866-217-9197 (toll free).

/Chirag R Patel/

Primary Examiner, Art Unit 2454

Search Notes	Application/Control No.	Applicant(s)/Patent Under Reexamination
	16/876,579	BRUECK et al.
	Examiner	**Art Unit**
	CHIRAG R PATEL	2454

CPC - Searched*		
Symbol	**Date**	**Examiner**
H04N21/2662, H04N21/8456, H04L65/607,H04L65/608, H04L67/02	06/12/2020	C.P.

CPC Combination Sets - Searched*		
Symbol	**Date**	**Examiner**

US Classification - Searched*			
Class	**Subclass**	**Date**	**Examiner**

* See search history printout included with this form or the SEARCH NOTES box below to determine the scope of the search.

Search Notes		
Search Notes	**Date**	**Examiner**
EAST	06/12/2020	C.P.
EAST	02/01/2021	C.P.
EAST	09/10/2021	C.P.
Google Patents / Scholar	09/10/2021	C.P.
PE2E Search	12/15/2021	C.P.
Google Patents / Scholar	12/15/2021	C.P.
Reviewed the Carmel '473 patent	01/25/2022	C.P.

Search Notes	Application/Control No.	Applicant(s)/Patent Under Reexamination
	16/876,579	BRUECK et al.
	Examiner	**Art Unit**
	CHIRAG R PATEL	2454

Interference Search			
US Class/CPC Symbol	**US Subclass/CPC Group**	**Date**	**Examiner**
H04N	H04N21/2662, H04N21/8456,	09/10/2021	C.P.
H04L	H04L65/607,H04L65/608, H04L67/02	09/10/2021	C.P.

DISH EXHIBIT 2002, Page 1269
Aylo Freesites Ltd. v. Dish Technologies L.L.C.
IPR2024-00047

Index of Claims	Application/Control No.	Applicant(s)/Patent Under Reexamination
	16/876,579	BRUECK et al.
	Examiner	**Art Unit**
	CHIRAG R PATEL	2454

✓	Rejected	-	Cancelled	N	Non-Elected	A	Appeal
=	Allowed	÷	Restricted	I	Interference	O	Objected

CLAIMS

☑ Claims renumbered in the same order as presented by applicant ☐ CPA ☑ T.D. ☐ R.1.47

CLAIM		DATE								
Final	Original	06/12/2020	09/10/2021	12/15/2021	01/25/2022					
	1	✓	=	=	=					
	2	✓	=	=	=					
	3	✓	=	=	=					
	4	✓	=	=	=					
	5	✓	=	=	=					
	6	✓	=	=	=					
	7	✓	=	=	=					
	8	✓	=	=	=					
	9	✓	=	=	=					
	10	✓	=	=	=					
	11	✓	=	=	=					
	12	✓	=	=	=					
	13	✓	=	=	=					
	14	✓	=	=	=					
	15	✓	=	=	=					
	16	✓	=	=	=					
	17	✓	=	=	=					
	18	✓	=	=	=					
	19	✓	=	=	=					
	20	✓	=	=	=					
	21	✓	=	=	=					
	22	✓	=	=	=					
	23	✓	=	=	=					
	24	✓	=	=	=					
	25	✓	=	=	=					
	26	✓	=	=	=					
	27	✓	=	=	=					
	28	✓	=	=	=					
	29	✓	=	=	=					
	30	✓	=	=	=					

Issue Classification	Application/Control No.	Applicant(s)/Patent Under Reexamination
	16/876,579	BRUECK et al.
	Examiner	**Art Unit**
	CHIRAG R PATEL	2454

CPC						
Symbol					**Type**	**Version**
H04L	/	65	/	607	F	2013-01-01
H04L	/	47	/	801	I	2013-01-01
H04L	/	47	/	12	I	2013-01-01
H04L	/	65	/	4069	I	2013-01-01
G06F	/	16	/	71	I	2019-01-01
G06F	/	16	/	183	I	2019-01-01
H04L	/	29	/	06027	I	2013-01-01
H04N	/	7	/	24	I	2013-01-01
H04N	/	21	/	23439	I	2013-01-01
H04N	/	21	/	4331	I	2013-01-01
H04N	/	21	/	84	I	2013-01-01
H04N	/	21	/	8456	I	2013-01-01
H04L	/	65	/	80	I	2013-01-01
H04L	/	65	/	608	I	2013-01-01
H04L	/	67	/	02	I	2013-01-01
H04L	/	65	/	1069	I	2013-01-01
H04L	/	67	/	2842	I	2013-01-01
H04L	/	67	/	32	I	2013-01-01
H04N	/	21	/	2662	I	2013-01-01

CPC Combination Sets								
Symbol					**Type**	**Set**	**Ranking**	**Version**
	/		/					

NONE (Assistant Examiner)	(Date)	**Total Claims Allowed:** 30	
/CHIRAG R PATEL/ Primary Examiner, Art Unit 2454 (Primary Examiner)	25 January 2022 (Date)	O.G. Print Claim(s) 1	O.G. Print Figure 4

U.S. Patent and Trademark Office

Part of Paper No.: 20220125

Issue Classification	Application/Control No.	Applicant(s)/Patent Under Reexamination
	16/876,579	BRUECK et al.
	Examiner	**Art Unit**
	CHIRAG R PATEL	2454

INTERNATIONAL CLASSIFICATION				
CLAIMED				
H04L	/	29	/	06

NON-CLAIMED				
	/		/	

US ORIGINAL CLASSIFICATION	
CLASS	**SUBCLASS**

CROSS REFERENCES(S)						
CLASS	**SUBCLASS (ONE SUBCLASS PER BLOCK)**					

NONE (Assistant Examiner) (Date)		**Total Claims Allowed:** 30	
/CHIRAG R PATEL/ Primary Examiner, Art Unit 2454 (Primary Examiner) (Date)	25 January 2022	O.G. Print Claim(s) 1	O.G. Print Figure 4

U.S. Patent and Trademark Office

Part of Paper No.: 20220125

Issue Classification	Application/Control No.	Applicant(s)/Patent Under Reexamination
	16/876,579	BRUECK et al.
	Examiner	**Art Unit**
	CHIRAG R PATEL	2454

☑ Claims renumbered in the same order as presented by applicant ☐ CPA ☐ T.D. ☐ R.1.47

CLAIMS

Final	Original	Final	Original	Final	Original	Final	Original	Final	Original	Final	Original	Final	Original	Final	Original
	1		10		19		28								
	2		11		20		29								
	3		12		21		30								
	4		13		22										
	5		14		23										
	6		15		24										
	7		16		25										
	8		17		26										
	9		18		27										

NONE (Assistant Examiner)	(Date)	**Total Claims Allowed:** 30	
/CHIRAG R PATEL/ Primary Examiner, Art Unit 2454 (Primary Examiner)	25 January 2022 (Date)	O.G. Print Claim(s) 1	O.G. Print Figure 4

U.S. Patent and Trademark Office

Part of Paper No.: 20220125

PTO/SB/08a (02-18)
Approved for use through 11/30/2020. OMB 0651-0031
U.S. Patent and Trademark Office; U.S. DEPARTMENT OF COMMERCE
Under the Paperwork Reduction Act of 1995, no persons are required to respond to a collection of information unless it contains a valid OMB control number.

INFORMATION DISCLOSURE STATEMENT BY APPLICANT

(Not for submission under 37 CFR 1.99)

Application Number	16876579
Filing Date	2020-05-18
First Named Inventor	DAVID F. BRUECK
Art Unit	2454
Examiner Name	Chirag R. Patel
Attorney Docket Number	066.0141X1C9

U.S.PATENTS Remove

Examiner Initial*	Cite No	Patent Number	Kind Code[1]	Issue Date	Name of Patentee or Applicant of cited Document	Pages,Columns,Lines where Relevant Passages or Relevant Figures Appear
	1					

If you wish to add additional U.S. Patent citation information please click the Add button. Add

U.S.PATENT APPLICATION PUBLICATIONS Remove

Examiner Initial*	Cite No	Publication Number	Kind Code[1]	Publication Date	Name of Patentee or Applicant of cited Document	Pages,Columns,Lines where Relevant Passages or Relevant Figures Appear
	1					

If you wish to add additional U.S. Published Application citation information please click the Add button. Add

FOREIGN PATENT DOCUMENTS Remove

Examiner Initial*	Cite No	Foreign Document Number[3]	Country Code[2] i	Kind Code[4]	Publication Date	Name of Patentee or Applicant of cited Document	Pages,Columns,Lines where Relevant Passages or Relevant Figures Appear	T[5]
	1							

If you wish to add additional Foreign Patent Document citation information please click the Add button Add

NON-PATENT LITERATURE DOCUMENTS Remove

Examiner Initials*	Cite No	Include name of the author (in CAPITAL LETTERS), title of the article (when appropriate), title of the item (book, magazine, journal, serial, symposium, catalog, etc), date, pages(s), volume-issue number(s), publisher, city and/or country where published.	T[5]

INFORMATION DISCLOSURE STATEMENT BY APPLICANT (Not for submission under 37 CFR 1.99)	Application Number	16876579
	Filing Date	2020-05-18
	First Named Inventor	DAVID F. BRUECK
	Art Unit	2454
	Examiner Name	Chirag R. Patel
	Attorney Docket Number	066.0141X1C9

/C.R.P/	1	Investigation No. 337-TA-1265: Redacted REBUTTAL EXPERT REPORT OF TERESA STANEK REA	
/C.R.P/	2	Investigation No. 337-TA-1265: Redacted REBUTTAL EXPERT REPORT OF KEVIN JEFFAY, PHD., REGARDING VALIDITY	
/C.R.P/	3	Investigation No. 337-TA-1265: Redacted EXPERT REPORT OF DR. IAIN RICHARDSON ON INVALIDITY	
/C.R.P/	4	Investigation No. 337-TA-1265: Redacted EXPERT REPORT OF ROBERT L. STOLL	

If you wish to add additional non-patent literature document citation information please click the Add button Add

EXAMINER SIGNATURE

Examiner Signature	/CHIRAG R PATEL/	Date Considered	01/25/2022

*EXAMINER: Initial if reference considered, whether or not citation is in conformance with MPEP 609. Draw line through a citation if not in conformance and not considered. Include copy of this form with next communication to applicant.

[1] See Kind Codes of USPTO Patent Documents at www.USPTO.GOV or MPEP 901.04. [2] Enter office that issued the document, by the two-letter code (WIPO Standard ST.3). [3] For Japanese patent documents, the indication of the year of the reign of the Emperor must precede the serial number of the patent document. [4] Kind of document by the appropriate symbols as indicated on the document under WIPO Standard ST.16 if possible. [5] Applicant is to place a check mark here if English language translation is attached.

INFORMATION DISCLOSURE STATEMENT BY APPLICANT (Not for submission under 37 CFR 1.99)	Application Number	16876579
	Filing Date	2020-05-18
	First Named Inventor	DAVID F. BRUECK
	Art Unit	2454
	Examiner Name	Chirag R. Patel
	Attorney Docket Number	066.0141X1C9

CERTIFICATION STATEMENT

Please see 37 CFR 1.97 and 1.98 to make the appropriate selection(s):

That each item of information contained in the information disclosure statement was first cited in any communication from a foreign patent office in a counterpart foreign application not more than three months prior to the filing of the information disclosure statement. See 37 CFR 1.97(e)(1).

OR

☐ That no item of information contained in the information disclosure statement was cited in a communication from a foreign patent office in a counterpart foreign application, and, to the knowledge of the person signing the certification after making reasonable inquiry, no item of information contained in the information disclosure statement was known to any individual designated in 37 CFR 1.56(c) more than three months prior to the filing of the information disclosure statement. See 37 CFR 1.97(e)(2).

☒ See attached certification statement.

The fee set forth in 37 CFR 1.17 (p) has been submitted herewith.

A certification statement is not submitted herewith.

SIGNATURE

A signature of the applicant or representative is required in accordance with CFR 1.33, 10.18. Please see CFR 1.4(d) for the form of the signature.

Signature	/BRETT A. CARLSON/	Date (YYYY-MM-DD)	2022-01-06
Name/Print	Brett A. Carlson	Registration Number	39928

This collection of information is required by 37 CFR 1.97 and 1.98. The information is required to obtain or retain a benefit by the public which is to file (and by the USPTO to process) an application. Confidentiality is governed by 35 U.S.C. 122 and 37 CFR 1.14. This collection is estimated to take 1 hour to complete, including gathering, preparing and submitting the completed application form to the USPTO. Time will vary depending upon the individual case. Any comments on the amount of time you require to complete this form and/or suggestions for reducing this burden, should be sent to the Chief Information Officer, U.S. Patent and Trademark Office, U.S. Department of Commerce, P.O. Box 1450, Alexandria, VA 22313-1450. DO NOT SEND FEES OR COMPLETED FORMS TO THIS ADDRESS. **SEND TO: Commissioner for Patents, P.O. Box 1450, Alexandria, VA 22313-1450.**

Privacy Act Statement

The Privacy Act of 1974 (P.L. 93-579) requires that you be given certain information in connection with your submission of the attached form related to a patent application or patent. Accordingly, pursuant to the requirements of the Act, please be advised that: (1) the general authority for the collection of this information is 35 U.S.C. 2(b)(2); (2) furnishing of the information solicited is voluntary; and (3) the principal purpose for which the information is used by the U.S. Patent and Trademark Office is to process and/or examine your submission related to a patent application or patent. If you do not furnish the requested information, the U.S. Patent and Trademark Office may not be able to process and/or examine your submission, which may result in termination of proceedings or abandonment of the application or expiration of the patent.

The information provided by you in this form will be subject to the following routine uses:

1. The information on this form will be treated confidentially to the extent allowed under the Freedom of Information Act (5 U.S.C. 552) and the Privacy Act (5 U.S.C. 552a). Records from this system of records may be disclosed to the Department of Justice to determine whether the Freedom of Information Act requires disclosure of these record s.

2. A record from this system of records may be disclosed, as a routine use, in the course of presenting evidence to a court, magistrate, or administrative tribunal, including disclosures to opposing counsel in the course of settlement negotiations.

3. A record in this system of records may be disclosed, as a routine use, to a Member of Congress submitting a request involving an individual, to whom the record pertains, when the individual has requested assistance from the Member with respect to the subject matter of the record.

4. A record in this system of records may be disclosed, as a routine use, to a contractor of the Agency having need for the information in order to perform a contract. Recipients of information shall be required to comply with the requirements of the Privacy Act of 1974, as amended, pursuant to 5 U.S.C. 552a(m).

5. A record related to an International Application filed under the Patent Cooperation Treaty in this system of records may be disclosed, as a routine use, to the International Bureau of the World Intellectual Property Organization, pursuant to the Patent Cooperation Treaty.

6. A record in this system of records may be disclosed, as a routine use, to another federal agency for purposes of National Security review (35 U.S.C. 181) and for review pursuant to the Atomic Energy Act (42 U.S.C. 218(c)).

7. A record from this system of records may be disclosed, as a routine use, to the Administrator, General Services, or his/her designee, during an inspection of records conducted by GSA as part of that agency's responsibility to recommend improvements in records management practices and programs, under authority of 44 U.S.C. 2904 and 2906. Such disclosure shall be made in accordance with the GSA regulations governing inspection of records for this purpose, and any other relevant (i.e., GSA or Commerce) directive. Such disclosure shall not be used to make determinations about individuals.

8. A record from this system of records may be disclosed, as a routine use, to the public after either publication of the application pursuant to 35 U.S.C. 122(b) or issuance of a patent pursuant to 35 U.S.C. 151. Further, a record may be disclosed, subject to the limitations of 37 CFR 1.14, as a routine use, to the public if the record was filed in an application which became abandoned or in which the proceedings were terminated and which application is referenced by either a published application, an application open to public inspections or an issued patent.

9. A record from this system of records may be disclosed, as a routine use, to a Federal, State, or local law enforcement agency, if the USPTO becomes aware of a violation or potential violation of law or regulation.

Bibliographic Data

Application No: 16/876,579

Foreign Priority claimed: ○ Yes ◉ No

35 USC 119 (a-d) conditions met: ☐ Yes ☑ No ☐ Met After Allowance

Verified and Acknowledged: /CHIRAG R PATEL/ [ ]

Examiner's Signature | Initials

Title: APPARATUS, SYSTEM, AND METHOD FOR MULTI-BITRATE CONTENT STREAMING

FILING or 371(c) DATE	CLASS	GROUP ART UNIT	ATTORNEY DOCKET NO.
05/18/2020	709	2454	066.0141X1C9
RULE			

APPLICANTS

DISH Technologies L.L.C., Englewood, CO, UNITED STATES

INVENTORS

DAVID F. BRUECK, SARATOGA SPRINGS, UT, UNITED STATES

MARK B. HURST, CEDAR HILLS, UT, UNITED STATES

R. DREW MAJOR, OREM, UT, UNITED STATES

CONTINUING DATA

This application is a CON of 16004056 06/08/2018 PAT 10659513

16004056 is a CON of 15414025 01/24/2017 PAT 9998516

15414025 is a CON of 14719122 05/21/2015 PAT 9571551

14719122 is a CON of 14106051 12/13/2013 PAT 9071668

14106051 is a CON of 13617114 09/14/2012 PAT 8612624

13617114 is a CON of 12906940 10/18/2010 PAT 8402156

12906940 is a CON of 11673483 02/09/2007 PAT 7818444

11673483 is a CIP of 11116783 04/28/2005 PAT 8868772

11116783 has PRO of 60566831 04/30/2004

FOREIGN APPLICATIONS

IF REQUIRED, FOREIGN LICENSE GRANTED**

05/26/2020

STATE OR COUNTRY

UNITED STATES

ADDRESS

LKGLOBAL (Dish Technologies L.L.C.)

7010 E. COCHISE ROAD
SCOTTSDALE, AZ 85253
UNITED STATES

FILING FEE RECEIVED

$7,320

UNITED STATES PATENT AND TRADEMARK OFFICE

UNITED STATES DEPARTMENT OF COMMERCE
United States Patent and Trademark Office
Address: COMMISSIONER FOR PATENTS
P.O. Box 1450
Alexandria, Virginia 22313-1450
www.uspto.gov

APPLICATION NO.	FILING DATE	FIRST NAMED INVENTOR	ATTORNEY DOCKET NO.	CONFIRMATION NO.
16/876,579	05/18/2020	DAVID F. BRUECK	9401-00254	3720

70560 7590 03/09/2022
KW LAW LLP (Dish Technologies L.L.C.)
6122 N 7th St Suite D
Phoenix, AZ 85014

EXAMINER
PATEL, CHIRAG R

ART UNIT	PAPER NUMBER
2454	

NOTIFICATION DATE	DELIVERY MODE
03/09/2022	ELECTRONIC

Please find below and/or attached an Office communication concerning this application or proceeding.

The time period for reply, if any, is set in the attached communication.

Notice of the Office communication was sent electronically on above-indicated "Notification Date" to the following e-mail address(es):

dish@kwlaw.co
ipdept@dish.com
uspto@docketttrak.com

Corrected *Notice of Allowability*	**Application No.** 16/876,579	**Applicant(s)** BRUECK et al.	
	Examiner CHIRAG R PATEL	**Art Unit** 2454	**AIA (FITF) Status** No

-- The MAILING DATE of this communication appears on the cover sheet with the correspondence address--

All claims being allowable, PROSECUTION ON THE MERITS IS (OR REMAINS) CLOSED in this application. If not included herewith (or previously mailed), a Notice of Allowance (PTOL-85) or other appropriate communication will be mailed in due course. **THIS NOTICE OF ALLOWABILITY IS NOT A GRANT OF PATENT RIGHTS.** This application is subject to withdrawal from issue at the initiative of the Office or upon petition by the applicant. See 37 CFR 1.313 and MPEP 1308.

1. ☑ This communication is responsive to the IDS filed on 1/26/22.
   ☐ A declaration(s)/affidavit(s) under **37 CFR 1.130(b)** was/were filed on _____.

2. ☐ An election was made by the applicant in response to a restriction requirement set forth during the interview on _____; the restriction requirement and election have been incorporated into this action.

3. ☑ The allowed claim(s) is/are 1-30 . As a result of the allowed claim(s), you may be eligible to benefit from the **Patent Prosecution Highway** program at a participating intellectual property office for the corresponding application. For more information, please see **http://www.uspto.gov/patents/init_events/pph/index.jsp** or send an inquiry to **PPHfeedback@uspto.gov.**

4. ☐ Acknowledgment is made of a claim for foreign priority under 35 U.S.C. § 119(a)-(d) or (f).

   Certified copies:

   a) ☐ All b) ☐ Some* c) ☐ None of the:

   1. ☐ Certified copies of the priority documents have been received.
   2. ☐ Certified copies of the priority documents have been received in Application No. _____ .
   3. ☐ Copies of the certified copies of the priority documents have been received in this national stage application from the International Bureau (PCT Rule 17.2(a)).

   * Certified copies not received: _____ .

Applicant has THREE MONTHS FROM THE "MAILING DATE" of this communication to file a reply complying with the requirements noted below. Failure to timely comply will result in ABANDONMENT of this application.
THIS THREE-MONTH PERIOD IS NOT EXTENDABLE.

5. ☐ CORRECTED DRAWINGS (as "replacement sheets") must be submitted.
   ☐ including changes required by the attached Examiner's Amendment / Comment or in the Office action of Paper No./Mail Date _____ .

   Identifying indicia such as the application number (see 37 CFR 1.84(c)) should be written on the drawings in the front (not the back) of each sheet. Replacement sheet(s) should be labeled as such in the header according to 37 CFR 1.121(d).

6. ☐ DEPOSIT OF and/or INFORMATION about the deposit of BIOLOGICAL MATERIAL must be submitted. Note the attached Examiner's comment regarding REQUIREMENT FOR THE DEPOSIT OF BIOLOGICAL MATERIAL.

Attachment(s)

1. ☐ Notice of References Cited (PTO-892)
2. ☑ Information Disclosure Statements (PTO/SB/08), Paper No./Mail Date 1/26/22.
3. ☐ Examiner's Comment Regarding Requirement for Deposit of Biological Material _____.
4. ☐ Interview Summary (PTO-413), Paper No./Mail Date. _____.
5. ☐ Examiner's Amendment/Comment
6. ☐ Examiner's Statement of Reasons for Allowance
7. ☐ Other _____.

/CHIRAG R PATEL/
Primary Examiner, Art Unit 2454

DISH EXHIBIT 2002, Page 1281
Aylo Freesites Ltd. v. Dish Technologies L.L.C.
IPR2024-00047

Issue Classification	Application/Control No.	Applicant(s)/Patent Under Reexamination
	16/876,579	BRUECK et al.
	Examiner	**Art Unit**
	CHIRAG R PATEL	2454

CPC						
Symbol					**Type**	**Version**
H04L	/	65	/	607	F	2013-01-01
H04L	/	47	/	801	I	2013-01-01
H04L	/	47	/	12	I	2013-01-01
H04L	/	65	/	4069	I	2013-01-01
G06F	/	16	/	71	I	2019-01-01
G06F	/	16	/	183	I	2019-01-01
H04L	/	29	/	06027	I	2013-01-01
H04N	/	7	/	24	I	2013-01-01
H04N	/	21	/	23439	I	2013-01-01
H04N	/	21	/	4331	I	2013-01-01
H04N	/	21	/	84	I	2013-01-01
H04N	/	21	/	8456	I	2013-01-01
H04L	/	65	/	80	I	2013-01-01
H04L	/	65	/	608	I	2013-01-01
H04L	/	67	/	02	I	2013-01-01
H04L	/	65	/	1069	I	2013-01-01
H04L	/	67	/	2842	I	2013-01-01
H04L	/	67	/	32	I	2013-01-01
H04N	/	21	/	2662	I	2013-01-01

CPC Combination Sets								
Symbol					**Type**	**Set**	**Ranking**	**Version**
	/		/					

NONE (Assistant Examiner)	(Date)	**Total Claims Allowed:** 30	
/CHIRAG R PATEL/ Primary Examiner, Art Unit 2454 (Primary Examiner)	04 March 2022 (Date)	O.G. Print Claim(s) 1	O.G. Print Figure 4

U.S. Patent and Trademark Office

Part of Paper No.: 20220304

Issue Classification	Application/Control No.	Applicant(s)/Patent Under Reexamination
	16/876,579	BRUECK et al.
	Examiner	**Art Unit**
	CHIRAG R PATEL	2454

INTERNATIONAL CLASSIFICATION				
CLAIMED				
H04L	/	29	/	06

NON-CLAIMED				
	/		/	

US ORIGINAL CLASSIFICATION	
CLASS	**SUBCLASS**

CROSS REFERENCES(S)						
CLASS	**SUBCLASS (ONE SUBCLASS PER BLOCK)**					

NONE (Assistant Examiner) (Date)		**Total Claims Allowed:** 30	
/CHIRAG R PATEL/ Primary Examiner, Art Unit 2454 (Primary Examiner) (Date)	04 March 2022	O.G. Print Claim(s) 1	O.G. Print Figure 4

U.S. Patent and Trademark Office

Part of Paper No.: 20220304

DISH EXHIBIT 2002, Page 1283
Aylo Freesites Ltd. v. Dish Technologies L.L.C.
IPR2024-00047

Issue Classification	Application/Control No.	Applicant(s)/Patent Under Reexamination
	16/876,579	BRUECK et al.
	Examiner	**Art Unit**
	CHIRAG R PATEL	2454

☑ Claims renumbered in the same order as presented by applicant ☐ CPA ☑ T.D. ☐ R.1.47

CLAIMS

Final	Original	Final	Original	Final	Original	Final	Original	Final	Original	Final	Original	Final	Original	Final	Original
	1		10		19		28								
	2		11		20		29								
	3		12		21		30								
	4		13		22										
	5		14		23										
	6		15		24										
	7		16		25										
	8		17		26										
	9		18		27										

NONE (Assistant Examiner)	(Date)	**Total Claims Allowed:** 30	
/CHIRAG R PATEL/ Primary Examiner, Art Unit 2454 (Primary Examiner)	04 March 2022 (Date)	O.G. Print Claim(s) 1	O.G. Print Figure 4

U.S. Patent and Trademark Office

Part of Paper No.: 20220304

Search Notes	Application/Control No.	Applicant(s)/Patent Under Reexamination
	16/876,579	BRUECK et al.
	Examiner	**Art Unit**
	CHIRAG R PATEL	2454

CPC - Searched*		
Symbol	**Date**	**Examiner**
H04N21/2662, H04N21/8456, H04L65/607,H04L65/608, H04L67/02	06/12/2020	C.P.

CPC Combination Sets - Searched*		
Symbol	**Date**	**Examiner**

US Classification - Searched*			
Class	**Subclass**	**Date**	**Examiner**

* See search history printout included with this form or the SEARCH NOTES box below to determine the scope of the search.

Search Notes		
Search Notes	**Date**	**Examiner**
EAST	06/12/2020	C.P.
EAST	02/01/2021	C.P.
EAST	09/10/2021	C.P.
Google Patents / Scholar	09/10/2021	C.P.
PE2E Search	12/15/2021	C.P.
Google Patents / Scholar	12/15/2021	C.P.
Reviewed the Carmel '473 patent	01/25/2022	C.P.

Search Notes	Application/Control No.	Applicant(s)/Patent Under Reexamination
	16/876,579	BRUECK et al.
	Examiner	**Art Unit**
	CHIRAG R PATEL	2454

Interference Search			
US Class/CPC Symbol	**US Subclass/CPC Group**	**Date**	**Examiner**
H04N	H04N21/2662, H04N21/8456,	09/10/2021	C.P.
H04L	H04L65/607,H04L65/608, H04L67/02	09/10/2021	C.P.

DISH EXHIBIT 2002, Page 1286
Aylo Freesites Ltd. v. Dish Technologies L.L.C.
IPR2024-00047

Index of Claims	Application/Control No.	Applicant(s)/Patent Under Reexamination
	16/876,579	BRUECK et al.
	Examiner	**Art Unit**
	CHIRAG R PATEL	2454

✓	Rejected	-	Cancelled	N	Non-Elected	A	Appeal
=	Allowed	÷	Restricted	I	Interference	O	Objected

CLAIMS

☑ Claims renumbered in the same order as presented by applicant ☐ CPA ☑ T.D. ☐ R.1.47

CLAIM		DATE								
Final	Original	06/12/2020	09/10/2021	12/15/2021	01/25/2022	03/04/2022				
	1	✓	=	=	=	=				
	2	✓	=	=	=	=				
	3	✓	=	=	=	=				
	4	✓	=	=	=	=				
	5	✓	=	=	=	=				
	6	✓	=	=	=	=				
	7	✓	=	=	=	=				
	8	✓	=	=	=	=				
	9	✓	=	=	=	=				
	10	✓	=	=	=	=				
	11	✓	=	=	=	=				
	12	✓	=	=	=	=				
	13	✓	=	=	=	=				
	14	✓	=	=	=	=				
	15	✓	=	=	=	=				
	16	✓	=	=	=	=				
	17	✓	=	=	=	=				
	18	✓	=	=	=	=				
	19	✓	=	=	=	=				
	20	✓	=	=	=	=				
	21	✓	=	=	=	=				
	22	✓	=	=	=	=				
	23	✓	=	=	=	=				
	24	✓	=	=	=	=				
	25	✓	=	=	=	=				
	26	✓	=	=	=	=				
	27	✓	=	=	=	=				
	28	✓	=	=	=	=				
	29	✓	=	=	=	=				
	30	✓	=	=	=	=				

PTO/SB/08a (02-18)
Approved for use through 11/30/2020. OMB 0651-0031
U.S. Patent and Trademark Office; U.S. DEPARTMENT OF COMMERCE
Under the Paperwork Reduction Act of 1995, no persons are required to respond to a collection of information unless it contains a valid OMB control number.

INFORMATION DISCLOSURE STATEMENT BY APPLICANT

(Not for submission under 37 CFR 1.99)

Application Number	16876579
Filing Date	2020-05-18
First Named Inventor	DAVID F. BRUECK
Art Unit	2454
Examiner Name	Chirag R. Patel
Attorney Docket Number	066.0141X1C9

U.S.PATENTS Remove

Examiner Initial*	Cite No	Patent Number	Kind Code[1]	Issue Date	Name of Patentee or Applicant of cited Document	Pages,Columns,Lines where Relevant Passages or Relevant Figures Appear
	1					

If you wish to add additional U.S. Patent citation information please click the Add button. Add

U.S.PATENT APPLICATION PUBLICATIONS Remove

Examiner Initial*	Cite No	Publication Number	Kind Code[1]	Publication Date	Name of Patentee or Applicant of cited Document	Pages,Columns,Lines where Relevant Passages or Relevant Figures Appear
	1					

If you wish to add additional U.S. Published Application citation information please click the Add button. Add

FOREIGN PATENT DOCUMENTS Remove

Examiner Initial*	Cite No	Foreign Document Number[3]	Country Code[2] i	Kind Code[4]	Publication Date	Name of Patentee or Applicant of cited Document	Pages,Columns,Lines where Relevant Passages or Relevant Figures Appear	T[5]
	1							

If you wish to add additional Foreign Patent Document citation information please click the Add button Add

NON-PATENT LITERATURE DOCUMENTS Remove

Examiner Initials*	Cite No	Include name of the author (in CAPITAL LETTERS), title of the article (when appropriate), title of the item (book, magazine, journal, serial, symposium, catalog, etc), date, pages(s), volume-issue number(s), publisher, city and/or country where published.	T[5]

ALL REFERENCES CONSIDERED EXCEPT WHERE LINED THROUGH. /C.R.P/

INFORMATION DISCLOSURE STATEMENT BY APPLICANT (Not for submission under 37 CFR 1.99)		
	Application Number	16876579
	Filing Date	2020-05-18
	First Named Inventor	DAVID F. BRUECK
	Art Unit	2454
	Examiner Name	Chirag R. Patel
	Attorney Docket Number	066.0141X1C9

	1	Investigation No. 337-TA-1265: APPENDIX A TO EXPERT REPORT OF DR. IAIN RICHARDSON ON INVALIDITY: ANTICIPATION AND OBVIOUSNESS OVER CARMEL.	
	2	Investigation No. 337-TA-1265: APPENDIX B TO EXPERT REPORT OF DR. IAIN RICHARDSON ON INVALIDITY: ANTICIPATION AND OBVIOUSNESS OVER AKIYAMA.	
	3	Investigation No. 337-TA-1265: APPENDIX C-1 TO EXPERT REPORT OF DR. IAIN RICHARDSON ON INVALIDITY: ANTICIPATION AND OBVIOUSNESS OVER REALNETWORKS	
	4	Investigation No. 337-TA-1265: APPENDIX C-2 TO EXPERT REPORT OF DR. IAIN RICHARDSON ON INVALIDITY: REALNETWORKS EXPERIMENTATION	
	5	Investigation No. 337-TA-1265: APPENDIX D TO EXPERT REPORT OF DR. IAIN RICHARDSON ON INVALIDITY: ANTICIPATION AND OBVIOUSNESS OVER KLEMETS	
	6	Investigation No. 337-TA-1265: EXHIBIT E TO EXPERT REPORT OF DR. IAIN RICHARDSON ON INVALIDITY: ANTICIPATION AND OBVIOUSNESS OVER OPLAYO	
	7	Investigation No. 337-TA-1265: APPENDIX F TO EXPERT REPORT OF DR. IAIN RICHARDSON ON INVALIDITY: ANTICIPATION AND OBVIOUSNESS OVER KIKUCHI	
	8	Investigation No. 337-TA-1265: APPENDIX G TO EXPERT REPORT OF DR. IAIN RICHARDSON ON INVALIDITY: ANTICIPATION AND OBVIOUSNESS OVER TAKEMURA	
	9	Investigation No. 337-TA-1265: APPENDIX H TO EXPERT REPORT OF DR. IAIN RICHARDSON ON INVALIDITY: PUBLIC USE [Redacted]	
	10	Investigation No. 337-TA-1265: Exhibit 1 Dr. Iain Richardson curriculum vitae Dec21.	
	11	Investigation No. 337-TA-1265: RICHARDSON REPORT EXHIBIT 3: MATERIALS CONSIDERED	

INFORMATION DISCLOSURE STATEMENT BY APPLICANT (Not for submission under 37 CFR 1.99)		
	Application Number	16876579
	Filing Date	2020-05-18
	First Named Inventor	DAVID F. BRUECK
	Art Unit	2454
	Examiner Name	Chirag R. Patel
	Attorney Docket Number	066.0141X1C9

	12	Investigation No. 337-TA-1265: Appendix A To Supplemental Expert Report if Dr. Iain Richardson [Redacted]	
	13	Investigation No. 337-TA-1265: SUPPLEMENTAL EXPERT REPORT OF ROBERT L. STOLL	
	14	Investigation No. 337-TA-1265: SUPPLEMENTAL EXPERT REPORT OF DR. IAIN RICHARDSON ON INVALIDITY [Redacted]	
	15	Investigation No. 337-TA-1265: SUPPLEMENTAL REBUTTAL EXPERT REPORT OF KEVIN JEFFAY, PHD., REGARDING VALIDITY [Redacted]	
	16	Investigation No. 337-TA-1265: SUPPLEMENTAL REBUTTAL EXPERT REPORT OF TERESA STANEK REA [Redacted]	

If you wish to add additional non-patent literature document citation information please click the Add button Add

EXAMINER SIGNATURE

Examiner Signature	/CHIRAG R PATEL/	Date Considered	03/04/2022

*EXAMINER: Initial if reference considered, whether or not citation is in conformance with MPEP 609. Draw line through a citation if not in conformance and not considered. Include copy of this form with next communication to applicant.

[1] See Kind Codes of USPTO Patent Documents at www.USPTO.GOV or MPEP 901.04. [2] Enter office that issued the document, by the two-letter code (WIPO Standard ST.3). [3] For Japanese patent documents, the indication of the year of the reign of the Emperor must precede the serial number of the patent document. [4] Kind of document by the appropriate symbols as indicated on the document under WIPO Standard ST.16 if possible. [5] Applicant is to place a check mark here if English language translation is attached.

ALL REFERENCES CONSIDERED EXCEPT WHERE LINED THROUGH. /C.R.P/

INFORMATION DISCLOSURE STATEMENT BY APPLICANT (Not for submission under 37 CFR 1.99)	Application Number	16876579
	Filing Date	2020-05-18
	First Named Inventor	DAVID F. BRUECK
	Art Unit	2454
	Examiner Name	Chirag R. Patel
	Attorney Docket Number	066.0141X1C9

CERTIFICATION STATEMENT

Please see 37 CFR 1.97 and 1.98 to make the appropriate selection(s):

That each item of information contained in the information disclosure statement was first cited in any communication from a foreign patent office in a counterpart foreign application not more than three months prior to the filing of the information disclosure statement. See 37 CFR 1.97(e)(1).

OR

☐ That no item of information contained in the information disclosure statement was cited in a communication from a foreign patent office in a counterpart foreign application, and, to the knowledge of the person signing the certification after making reasonable inquiry, no item of information contained in the information disclosure statement was known to any individual designated in 37 CFR 1.56(c) more than three months prior to the filing of the information disclosure statement. See 37 CFR 1.97(e)(2).

☒ See attached certification statement.

The fee set forth in 37 CFR 1.17 (p) has been submitted herewith.

A certification statement is not submitted herewith.

SIGNATURE

A signature of the applicant or representative is required in accordance with CFR 1.33, 10.18. Please see CFR 1.4(d) for the form of the signature.

Signature	/BRETT A. CARLSON/	Date (YYYY-MM-DD)	2022-01-26
Name/Print	Brett A. Carlson	Registration Number	39928

This collection of information is required by 37 CFR 1.97 and 1.98. The information is required to obtain or retain a benefit by the public which is to file (and by the USPTO to process) an application. Confidentiality is governed by 35 U.S.C. 122 and 37 CFR 1.14. This collection is estimated to take 1 hour to complete, including gathering, preparing and submitting the completed application form to the USPTO. Time will vary depending upon the individual case. Any comments on the amount of time you require to complete this form and/or suggestions for reducing this burden, should be sent to the Chief Information Officer, U.S. Patent and Trademark Office, U.S. Department of Commerce, P.O. Box 1450, Alexandria, VA 22313-1450. DO NOT SEND FEES OR COMPLETED FORMS TO THIS ADDRESS. **SEND TO: Commissioner for Patents, P.O. Box 1450, Alexandria, VA 22313-1450.**

ALL REFERENCES CONSIDERED EXCEPT WHERE LINED THROUGH. /C.R.P/

Privacy Act Statement

The Privacy Act of 1974 (P.L. 93-579) requires that you be given certain information in connection with your submission of the attached form related to a patent application or patent. Accordingly, pursuant to the requirements of the Act, please be advised that: (1) the general authority for the collection of this information is 35 U.S.C. 2(b)(2); (2) furnishing of the information solicited is voluntary; and (3) the principal purpose for which the information is used by the U.S. Patent and Trademark Office is to process and/or examine your submission related to a patent application or patent. If you do not furnish the requested information, the U.S. Patent and Trademark Office may not be able to process and/or examine your submission, which may result in termination of proceedings or abandonment of the application or expiration of the patent.

The information provided by you in this form will be subject to the following routine uses:

1. The information on this form will be treated confidentially to the extent allowed under the Freedom of Information Act (5 U.S.C. 552) and the Privacy Act (5 U.S.C. 552a). Records from this system of records may be disclosed to the Department of Justice to determine whether the Freedom of Information Act requires disclosure of these record s.

2. A record from this system of records may be disclosed, as a routine use, in the course of presenting evidence to a court, magistrate, or administrative tribunal, including disclosures to opposing counsel in the course of settlement negotiations.

3. A record in this system of records may be disclosed, as a routine use, to a Member of Congress submitting a request involving an individual, to whom the record pertains, when the individual has requested assistance from the Member with respect to the subject matter of the record.

4. A record in this system of records may be disclosed, as a routine use, to a contractor of the Agency having need for the information in order to perform a contract. Recipients of information shall be required to comply with the requirements of the Privacy Act of 1974, as amended, pursuant to 5 U.S.C. 552a(m).

5. A record related to an International Application filed under the Patent Cooperation Treaty in this system of records may be disclosed, as a routine use, to the International Bureau of the World Intellectual Property Organization, pursuant to the Patent Cooperation Treaty.

6. A record in this system of records may be disclosed, as a routine use, to another federal agency for purposes of National Security review (35 U.S.C. 181) and for review pursuant to the Atomic Energy Act (42 U.S.C. 218(c)).

7. A record from this system of records may be disclosed, as a routine use, to the Administrator, General Services, or his/her designee, during an inspection of records conducted by GSA as part of that agency's responsibility to recommend improvements in records management practices and programs, under authority of 44 U.S.C. 2904 and 2906. Such disclosure shall be made in accordance with the GSA regulations governing inspection of records for this purpose, and any other relevant (i.e., GSA or Commerce) directive. Such disclosure shall not be used to make determinations about individuals.

8. A record from this system of records may be disclosed, as a routine use, to the public after either publication of the application pursuant to 35 U.S.C. 122(b) or issuance of a patent pursuant to 35 U.S.C. 151. Further, a record may be disclosed, subject to the limitations of 37 CFR 1.14, as a routine use, to the public if the record was filed in an application which became abandoned or in which the proceedings were terminated and which application is referenced by either a published application, an application open to public inspections or an issued patent.

9. A record from this system of records may be disclosed, as a routine use, to a Federal, State, or local law enforcement agency, if the USPTO becomes aware of a violation or potential violation of law or regulation.

ALL REFERENCES CONSIDERED EXCEPT WHERE LINED THROUGH. /C.R.P/

Bibliographic Data

Application No: 16/876,579

Foreign Priority claimed: ○ Yes ◉ No

35 USC 119 (a-d) conditions met: ☐ Yes ☑ No ☐ Met After Allowance

Verified and Acknowledged: /CHIRAG R PATEL/ [ ]

Examiner's Signature | Initials

Title: APPARATUS, SYSTEM, AND METHOD FOR MULTI-BITRATE CONTENT STREAMING

FILING or 371(c) DATE	CLASS	GROUP ART UNIT	ATTORNEY DOCKET NO.
05/18/2020	709	2454	9401-00254
RULE			

APPLICANTS

DISH Technologies L.L.C., Englewood, CO, UNITED STATES

INVENTORS

DAVID F. BRUECK, SARATOGA SPRINGS, UT, UNITED STATES

MARK B. HURST, CEDAR HILLS, UT, UNITED STATES

R. DREW MAJOR, OREM, UT, UNITED STATES

CONTINUING DATA

This application is a CON of 16004056 06/08/2018 PAT 10659513

16004056 is a CON of 15414025 01/24/2017 PAT 9998516

15414025 is a CON of 14719122 05/21/2015 PAT 9571551

14719122 is a CON of 14106051 12/13/2013 PAT 9071668

14106051 is a CON of 13617114 09/14/2012 PAT 8612624

13617114 is a CON of 12906940 10/18/2010 PAT 8402156

12906940 is a CON of 11673483 02/09/2007 PAT 7818444

11673483 is a CIP of 11116783 04/28/2005 PAT 8868772

11116783 has PRO of 60566831 04/30/2004

FOREIGN APPLICATIONS

IF REQUIRED, FOREIGN LICENSE GRANTED**

05/26/2020

STATE OR COUNTRY

UNITED STATES

ADDRESS

KW LAW LLP (Dish Technologies L.L.C.)

6122 N 7th St Suite D
Phoenix, AZ 85014
UNITED STATES

FILING FEE RECEIVED

$7,320

PTO/SB/30EFS (07-09)
Approved for use through 07/31/2012. OMB 0651-0031
U.S. Patent and Trademark Office; U.S. DEPARTMENT OF COMMERCE
Under the Paperwork Reduction Act of 1995, no persons are required to respond to a collection of information unless it contains a valid OMB control number.

REQUEST FOR CONTINUED EXAMINATION(RCE)TRANSMITTAL
(Submitted Only via EFS-Web)

Application Number	16/876,579	Filing Date	2020-05-18	Docket Number (if applicable)	9401-00254	Art Unit	2454
First Named Inventor	David F. Brueck			Examiner Name	Patel, Chirag R.		

This is a Request for Continued Examination (RCE) under 37 CFR 1.114 of the above-identified application.
Request for Continued Examination (RCE) practice under 37 CFR 1.114 does not apply to any utility or plant application filed prior to June 8, 1995, or to any design application. The Instruction Sheet for this form is located at WWW.USPTO.GOV

SUBMISSION REQUIRED UNDER 37 CFR 1.114

Note: If the RCE is proper, any previously filed unentered amendments and amendments enclosed with the RCE will be entered in the order in which they were filed unless applicant instructs otherwise. If applicant does not wish to have any previously filed unentered amendment(s) entered, applicant must request non-entry of such amendment(s).

☐ Previously submitted. If a final Office action is outstanding, any amendments filed after the final Office action may be considered as a submission even if this box is not checked.

- ☐ Consider the arguments in the Appeal Brief or Reply Brief previously filed on _____
- ☐ Other _____

☒ Enclosed

- ☐ Amendment/Reply
- ☒ Information Disclosure Statement (IDS)
- ☐ Affidavit(s)/ Declaration(s)
- ☐ Other _____

MISCELLANEOUS

☐ Suspension of action on the above-identified application is requested under 37 CFR 1.103(c) for a period of months _____
(Period of suspension shall not exceed 3 months; Fee under 37 CFR 1.17(i) required)

☐ Other _____

FEES

The RCE fee under 37 CFR 1.17(e) is required by 37 CFR 1.114 when the RCE is filed.
☒ The Director is hereby authorized to charge any underpayment of fees, or credit any overpayments, to Deposit Account No 602406

SIGNATURE OF APPLICANT, ATTORNEY, OR AGENT REQUIRED

X Patent Practitioner Signature
Applicant Signature

PTO/SB/30EFS (07-09)
Approved for use through 07/31/2012. OMB 0651-0031
U.S. Patent and Trademark Office; U.S. DEPARTMENT OF COMMERCE
Under the Paperwork Reduction Act of 1995, no persons are required to respond to a collection of information unless it contains a valid OMB control number.

Signature of Registered U.S. Patent Practitioner			
Signature	/Brett A. Carlson/	Date (YYYY-MM-DD)	2022-04-05
Name	Brett A. Carlson	Registration Number	39928

This collection of information is required by 37 CFR 1.114. The information is required to obtain or retain a benefit by the public which is to file (and by the USPTO to process) an application. Confidentiality is governed by 35 U.S.C. 122 and 37 CFR 1.11 and 1.14. This collection is estimated to take 12 minutes to complete, including gathering, preparing, and submitting the completed application form to the USPTO. Time will vary depending upon the individual case. Any comments on the amount of time you require to complete this form and/or suggestions for reducing this burden, should be sent to the Chief Information Officer, U.S. Patent and Trademark Office, U.S. Department of Commerce, P.O. Box 1450, Alexandria, VA 22313-1450.

If you need assistance in completing the form, call 1-800-PTO-9199 and select option 2.

Privacy Act Statement

The Privacy Act of 1974 (P.L. 93-579) requires that you be given certain information in connection with your submission of the attached form related to a patent application or patent. Accordingly, pursuant to the requirements of the Act, please be advised that: (1) the general authority for the collection of this information is 35 U.S.C. 2(b)(2); (2) furnishing of the information solicited is voluntary; and (3) the principal purpose for which the information is used by the U.S. Patent and Trademark Office is to process and/or examine your submission related to a patent application or patent. If you do not furnish the requested information, the U.S. Patent and Trademark Office may not be able to process and/or examine your submission, which may result in termination of proceedings or abandonment of the application or expiration of the patent.

The information provided by you in this form will be subject to the following routine uses:

1. The information on this form will be treated confidentially to the extent allowed under the Freedom of Information Act (5 U.S.C. 552) and the Privacy Act (5 U.S.C. 552a). Records from this system of records may be disclosed to the Department of Justice to determine whether the Freedom of Information Act requires disclosure of these records.

2. A record from this system of records may be disclosed, as a routine use, in the course of presenting evidence to a court, magistrate, or administrative tribunal, including disclosures to opposing counsel in the course of settlement negotiations.

3. A record in this system of records may be disclosed, as a routine use, to a Member of Congress submitting a request involving an individual, to whom the record pertains, when the individual has requested assistance from the Member with respect to the subject matter of the record.

4. A record in this system of records may be disclosed, as a routine use, to a contractor of the Agency having need for the information in order to perform a contract. Recipients of information shall be required to comply with the requirements of the Privacy Act of 1974, as amended, pursuant to 5 U.S.C. 552a(m).

5. A record related to an International Application filed under the Patent Cooperation Treaty in this system of records may be disclosed, as a routine use, to the International Bureau of the World Intellectual Property Organization, pursuant to the Patent Cooperation Treaty.

6. A record in this system of records may be disclosed, as a routine use, to another federal agency for purposes of National Security review (35 U.S.C. 181) and for review pursuant to the Atomic Energy Act (42 U.S.C. 218(c)).

7. A record from this system of records may be disclosed, as a routine use, to the Administrator, General Services, or his/her designee, during an inspection of records conducted by GSA as part of that agency's responsibility to recommend improvements in records management practices and programs, under authority of 44 U.S.C. 2904 and 2906. Such disclosure shall be made in accordance with the GSA regulations governing inspection of records for this purpose, and any other relevant (i.e., GSA or Commerce) directive. Such disclosure shall not be used to make determinations about individuals.

8. A record from this system of records may be disclosed, as a routine use, to the public after either publication of the application pursuant to 35 U.S.C. 122(b) or issuance of a patent pursuant to 35 U.S.C. 151. Further, a record may be disclosed, subject to the limitations of 37 CFR 1.14, as a routine use, to the public if the record was filed in an application which became abandoned or in which the proceedings were terminated and which application is referenced by either a published application, an application open to public inspections or an issued patent.

9. A record from this system of records may be disclosed, as a routine use, to a Federal, State, or local law enforcement agency, if the USPTO becomes aware of a violation or potential violation of law or regulation.

DISH EXHIBIT 2002, Page 1297
Aylo Freesites Ltd. v. Dish Technologies L.L.C.
IPR2024-00047

PTO/SB/08a (01-10)
Approved for use through 07/31/2012. OMB 0651-0031
U.S. Patent and Trademark Office; U.S. DEPARTMENT OF COMMERCE
Under the Paperwork Reduction Act of 1995, no persons are required to respond to a collection of information unless it contains a valid OMB control number.

INFORMATION DISCLOSURE STATEMENT BY APPLICANT

(Not for submission under 37 CFR 1.99)

Application Number	16876579
Filing Date	2020-05-18
First Named Inventor	David F. Brueck
Art Unit	2454
Examiner Name	Patel, Chirag R
Attorney Docket Number	9401-00254

U.S.PATENTS Remove

Examiner Initial*	Cite No	Patent Number	Kind Code[1]	Issue Date	Name of Patentee or Applicant of cited Document	Pages,Columns,Lines where Relevant Passages or Relevant Figures Appear
	1	6389473	B1	2002-05-14	Carmel et al.	

If you wish to add additional U.S. Patent citation information please click the Add button. Add

U.S.PATENT APPLICATION PUBLICATIONS Remove

Examiner Initial*	Cite No	Publication Number	Kind Code[1]	Publication Date	Name of Patentee or Applicant of cited Document	Pages,Columns,Lines where Relevant Passages or Relevant Figures Appear
	1	20030061305	A1	2003-03-27	Copley et al.	
	2	20040202109	A1	2004-10-14	Akiyama et al.	
	3	20030204602	A1	2003-10-30	Hudson et al.	
	4	20040010613	A1	2004-01-15	Apostolopoulos et al.	
	5	20020144276	A1	2020-10-03	Radford et al.	

If you wish to add additional U.S. Published Application citation information please click the Add button. Add

FOREIGN PATENT DOCUMENTS Remove

INFORMATION DISCLOSURE STATEMENT BY APPLICANT (Not for submission under 37 CFR 1.99)		
	Application Number	16876579
	Filing Date	2020-05-18
	First Named Inventor	David F. Brueck
	Art Unit	2454
	Examiner Name	Patel, Chirag R
	Attorney Docket Number	9401-00254

Examiner Initial*	Cite No	Foreign Document Number[3]	Country Code[2] i	Kind Code[4]	Publication Date	Name of Patentee or Applicant of cited Document	Pages,Columns,Lines where Relevant Passages or Relevant Figures Appear	T[5]
	1	2367219	GB	A	2002-03-27	Vintage Global		
	2	1395014	EP	A1	2004-03-03	Matsushita Electric Ind Co Ltd.		
	3	1298931	EP	A2	2003-04-02	Oplayo		

If you wish to add additional Foreign Patent Document citation information please click the Add button Add

NON-PATENT LITERATURE DOCUMENTS Remove

Examiner Initials*	Cite No	Include name of the author (in CAPITAL LETTERS), title of the article (when appropriate), title of the item (book, magazine, journal, serial, symposium, catalog, etc), date, pages(s), volume-issue number(s), publisher, city and/or country where published.	T[5]
	1	Appendix H, Appendix H to Expert Report of Dr. Iain Richardson on Invalidity: Public Use (40 pages).	
	2	The Wayback Machine, dated November 8, 2021 (1 page).	
	3	In the Matter of: Certain Fitness Devices, Videotaped Deposition of BYU Broadcasting, Mark Mitchell, dated December 2, 2021 (123 pages).	
	4	The Wayback Machine, bates labeled RESP-PA06323, dated December 7, 2021 (1 page).	
	5	The Wayback Machine, bates labeled RESP-PA06257, dated November 8, 2021 (1 page).	

INFORMATION DISCLOSURE STATEMENT BY APPLICANT (Not for submission under 37 CFR 1.99)		
	Application Number	16876579
	Filing Date	2020-05-18
	First Named Inventor	David F. Brueck
	Art Unit	2454
	Examiner Name	Patel, Chirag R
	Attorney Docket Number	9401-00254

	6	The Wayback Machine, bates labeled RESP-PA06256, dated November 8, 2021 (1 page).	
	7	Move Media, bates labeled RESP-PA06253, dated November 8, 2021 (1 page).	
	8	The Wayback Machine, bates labeled RESP-PA06252, dated November 8, 2021 (1 page).	
	9	BYU Television, bates labeled RESP-PA06247 to RESP-PA06248, dated November 8, 2021 (2 pages).	
	10	Mitchell Exhibit 13, BYU-TV Live, FAQ, bates labeled RESP-PA06275to RESP-PA06276, dated December 2, 2021 (2 pages).	
	11	Mitchell Exhibit 12, BYU Television, The Wayback Machine, bates labeled RESP-PA06268- to RESP-PA06269, dated December 2, 2021 (2 pages).	
	12	Mitchell Exhibit 11, BYU Television, The Wayback Machine, bates labeled RESP-PA06272 to RESP-PA06274, dated December 2, 2021 (3 pages).	
	13	Mitchell Exhibit 10, BYU Television, The Wayback Machine, bates labeled RESP-PA06266 to RESP-PA06267, dated December 2 2021 (2 pages).	
	14	Mitchell Exhibit 7, BYU Television, The Wayback Machine, bates labeled RESP-PA06270 to RESP-PA06271, dated December 2, 2021 (2 pages).	
	15	Mitchell Exhibit 6, bates labeled BYU000012-BYU000013, dated December 2, 2021 (2 pages).	
	16	Mitchell Exhibit 5, BYU Television, The Wayback Machine, bates labeled RESP-PA06263 to RESP-PA06264, dated December 2, 2021 (2 pages).	

INFORMATION DISCLOSURE STATEMENT BY APPLICANT (Not for submission under 37 CFR 1.99)		
	Application Number	16876579
	Filing Date	2020-05-18
	First Named Inventor	David F. Brueck
	Art Unit	2454
	Examiner Name	Patel, Chirag R
	Attorney Docket Number	9401-00254

	17	Mitchell Exhibit 4, BYU Television, The Wayback Machine, bates labeled RESP-PA06261 to RESP-PA06262, dated December 2, 2021 (2 pages).	
	18	Mitchell Exhibit 3, BYU Television, The Wayback Machine, bates labeled BYU000001, dated December 2, 2021 (1 page).	
	19	Mitchell Exhibit 2, Conference Summary for the 175th Semiannual General Conference, dated December 2, 2021 (3 pages).	
	20	Major Exhibit 62, Official Report of the One Hundred Seventy-fifth Semiannual General Conference of The Church of Jesus Christ of Latter-day Saints, dated November 5, 2021 (128 pages).	
	21	In the Matter of: In Re Certain Fitness Devices, Videotaped Deposition of Peloton Interactive, Inc., Drew Major, dated December 17, 2021 (72 pages).	
	22	In the Matter of: In Re Certain Fitness Devices and Systems Containing Same, Videotaped Deposition of John Edwards, dated November 12, 2021 (191 pages).	
	23	In the Matter of: In Re Certain Fitness Devices and Systems Containing Same, Videotaped Deposition of Robert Drew Major, dated November 5, 2021 (268 pages).	
	24	Uncertified Rough Draft Transcript, Deposition of Mark Hurst, Vol. 2, dated December 3, 2021 (51 pages).	
	25	Hurst Exhibit 68, Move Media, dated November 19, 2021 (1 page).	
	26	Bates labeled RESP-PA06326 to RESP-PA06337, dated December 7, 2021 (12 pages).	
	27	Bates labeled RESP-PA06255 (1 page).	

INFORMATION DISCLOSURE STATEMENT BY APPLICANT (Not for submission under 37 CFR 1.99)	Application Number	16876579
	Filing Date	2020-05-18
	First Named Inventor	David F. Brueck
	Art Unit	2454
	Examiner Name	Patel, Chirag R
	Attorney Docket Number	9401-00254

	28	Bates labeled RESP-PA06254 (1 page).	
	29	International Search Report for EP application 20216568.4 dated April 19, 2021 (15 pages).	
	30	Response to International Search Report filed with EP application 20216568.4 on November 19, 2021 (41 pages).	

If you wish to add additional non-patent literature document citation information please click the Add button Add

EXAMINER SIGNATURE

Examiner Signature		Date Considered	

*EXAMINER: Initial if reference considered, whether or not citation is in conformance with MPEP 609. Draw line through a citation if not in conformance and not considered. Include copy of this form with next communication to applicant.

[1] See Kind Codes of USPTO Patent Documents at www.USPTO.GOV or MPEP 901.04. [2] Enter office that issued the document, by the two-letter code (WIPO Standard ST.3). [3] For Japanese patent documents, the indication of the year of the reign of the Emperor must precede the serial number of the patent document. [4] Kind of document by the appropriate symbols as indicated on the document under WIPO Standard ST.16 if possible. [5] Applicant is to place a check mark here if English language translation is attached.

INFORMATION DISCLOSURE STATEMENT BY APPLICANT (Not for submission under 37 CFR 1.99)	Application Number	16876579
	Filing Date	2020-05-18
	First Named Inventor	David F. Brueck
	Art Unit	2454
	Examiner Name	Patel, Chirag R
	Attorney Docket Number	9401-00254

CERTIFICATION STATEMENT

Please see 37 CFR 1.97 and 1.98 to make the appropriate selection(s):

That each item of information contained in the information disclosure statement was first cited in any communication from a foreign patent office in a counterpart foreign application not more than three months prior to the filing of the information disclosure statement. See 37 CFR 1.97(e)(1).

OR

☐ That no item of information contained in the information disclosure statement was cited in a communication from a foreign patent office in a counterpart foreign application, and, to the knowledge of the person signing the certification after making reasonable inquiry, no item of information contained in the information disclosure statement was known to any individual designated in 37 CFR 1.56(c) more than three months prior to the filing of the information disclosure statement. See 37 CFR 1.97(e)(2).

☒ See attached certification statement.

☒ The fee set forth in 37 CFR 1.17 (p) has been submitted herewith.

A certification statement is not submitted herewith.

SIGNATURE

A signature of the applicant or representative is required in accordance with CFR 1.33, 10.18. Please see CFR 1.4(d) for the form of the signature.

Signature	/Brett A. Carlson/	Date (YYYY-MM-DD)	2022-04-05
Name/Print	Brett A. Carlson	Registration Number	39928

This collection of information is required by 37 CFR 1.97 and 1.98. The information is required to obtain or retain a benefit by the public which is to file (and by the USPTO to process) an application. Confidentiality is governed by 35 U.S.C. 122 and 37 CFR 1.14. This collection is estimated to take 1 hour to complete, including gathering, preparing and submitting the completed application form to the USPTO. Time will vary depending upon the individual case. Any comments on the amount of time you require to complete this form and/or suggestions for reducing this burden, should be sent to the Chief Information Officer, U.S. Patent and Trademark Office, U.S. Department of Commerce, P.O. Box 1450, Alexandria, VA 22313-1450. DO NOT SEND FEES OR COMPLETED FORMS TO THIS ADDRESS. **SEND TO: Commissioner for Patents, P.O. Box 1450, Alexandria, VA 22313-1450.**

Privacy Act Statement

The Privacy Act of 1974 (P.L. 93-579) requires that you be given certain information in connection with your submission of the attached form related to a patent application or patent. Accordingly, pursuant to the requirements of the Act, please be advised that: (1) the general authority for the collection of this information is 35 U.S.C. 2(b)(2); (2) furnishing of the information solicited is voluntary; and (3) the principal purpose for which the information is used by the U.S. Patent and Trademark Office is to process and/or examine your submission related to a patent application or patent. If you do not furnish the requested information, the U.S. Patent and Trademark Office may not be able to process and/or examine your submission, which may result in termination of proceedings or abandonment of the application or expiration of the patent.

The information provided by you in this form will be subject to the following routine uses:

1. The information on this form will be treated confidentially to the extent allowed under the Freedom of Information Act (5 U.S.C. 552) and the Privacy Act (5 U.S.C. 552a). Records from this system of records may be disclosed to the Department of Justice to determine whether the Freedom of Information Act requires disclosure of these record s.

2. A record from this system of records may be disclosed, as a routine use, in the course of presenting evidence to a court, magistrate, or administrative tribunal, including disclosures to opposing counsel in the course of settlement negotiations.

3. A record in this system of records may be disclosed, as a routine use, to a Member of Congress submitting a request involving an individual, to whom the record pertains, when the individual has requested assistance from the Member with respect to the subject matter of the record.

4. A record in this system of records may be disclosed, as a routine use, to a contractor of the Agency having need for the information in order to perform a contract. Recipients of information shall be required to comply with the requirements of the Privacy Act of 1974, as amended, pursuant to 5 U.S.C. 552a(m).

5. A record related to an International Application filed under the Patent Cooperation Treaty in this system of records may be disclosed, as a routine use, to the International Bureau of the World Intellectual Property Organization, pursuant to the Patent Cooperation Treaty.

6. A record in this system of records may be disclosed, as a routine use, to another federal agency for purposes of National Security review (35 U.S.C. 181) and for review pursuant to the Atomic Energy Act (42 U.S.C. 218(c)).

7. A record from this system of records may be disclosed, as a routine use, to the Administrator, General Services, or his/her designee, during an inspection of records conducted by GSA as part of that agency's responsibility to recommend improvements in records management practices and programs, under authority of 44 U.S.C. 2904 and 2906. Such disclosure shall be made in accordance with the GSA regulations governing inspection of records for this purpose, and any other relevant (i.e., GSA or Commerce) directive. Such disclosure shall not be used to make determinations about individuals.

8. A record from this system of records may be disclosed, as a routine use, to the public after either publication of the application pursuant to 35 U.S.C. 122(b) or issuance of a patent pursuant to 35 U.S.C. 151. Further, a record may be disclosed, subject to the limitations of 37 CFR 1.14, as a routine use, to the public if the record was filed in an application which became abandoned or in which the proceedings were terminated and which application is referenced by either a published application, an application open to public inspections or an issued patent.

9. A record from this system of records may be disclosed, as a routine use, to a Federal, State, or local law enforcement agency, if the USPTO becomes aware of a violation or potential violation of law or regulation.

Electronic Patent Application Fee Transmittal

Application Number:	16876579
Filing Date:	18-May-2020
Title of Invention:	APPARATUS, SYSTEM, AND METHOD FOR MULTI-BITRATE CONTENT STREAMING
First Named Inventor/Applicant Name:	DAVID F. BRUECK
Filer:	Brett Carlson/Sarah Flaaen
Attorney Docket Number:	9401-00254

Filed as Large Entity

Filing Fees for Utility under 35 USC 111(a)

Description	Fee Code	Quantity	Amount	Sub-Total in USD($)
Basic Filing:				
Pages:				
Claims:				
Miscellaneous-Filing:				
Petition:				
Patent-Appeals-and-Interference:				
Post-Allowance-and-Post-Issuance:				
Extension-of-Time:				

Description	Fee Code	Quantity	Amount	Sub-Total in USD($)
Miscellaneous:				
SUBMISSION- INFORMATION DISCLOSURE STMT	1806	1	260	260
RCE- 2ND AND SUBSEQUENT REQUEST	1820	1	2000	2000
		Total in USD ($)		**2260**

Electronic Acknowledgement Receipt

EFS ID:	45403025
Application Number:	16876579
International Application Number:	
Confirmation Number:	3720
Title of Invention:	APPARATUS, SYSTEM, AND METHOD FOR MULTI-BITRATE CONTENT STREAMING
First Named Inventor/Applicant Name:	DAVID F. BRUECK
Customer Number:	70560
Filer:	Brett Carlson/Sarah Flaaen
Filer Authorized By:	Brett Carlson
Attorney Docket Number:	9401-00254
Receipt Date:	05-APR-2022
Filing Date:	18-MAY-2020
Time Stamp:	18:46:03
Application Type:	Utility under 35 USC 111(a)

Payment information:

Submitted with Payment	yes
Payment Type	CARD
Payment was successfully received in RAM	$2260
RAM confirmation Number	E202245I47423546
Deposit Account	
Authorized User	

The Director of the USPTO is hereby authorized to charge indicated fees and credit any overpayment as follows:

File Listing:

Document Number	Document Description	File Name	File Size(Bytes)/ Message Digest	Multi Part /.zip	Pages (if appl.)
1	Transmittal Letter	9401-00254_IDS_TL.pdf	24209 d4a45feebb38c36e47e929196af03a836532841b	no	1
Warnings:					
Information:					
2	Request for Continued Examination (RCE)	9401-00254_RCE.pdf	697742 399d4b5ef7d564eb4005ab8f12422e0a71f3abbf	no	3
Warnings:					
Information:					
3	Information Disclosure Statement (IDS) Form (SB08)	9401-00254_IDS.pdf	613607 87b96b0483a5f157d0b98d92f971fc3c3414e21d	no	7
Warnings:					
Information:					
4	Non Patent Literature	EPSearchReport.pdf	682833 320da8ed4624ee2941d21782a3841fb596ce8c96	no	15
Warnings:					
Information:					
5	Non Patent Literature	HurstVol_2.pdf	144205 c5f3caced57f5d35039af5d8806d065e207672df	no	51
Warnings:					
Information:					
6	Non Patent Literature	HurstExhibit67.pdf	188688 97c51d2bd0a5d1592c7b5e3e66f1706ff77a5bf8	no	1
Warnings:					
Information:					

7	Non Patent Literature	EPResponseFiled19Nov2021.pdf	1025279 d24508bfa8fd53f699897f4f60f392e9abf6a1c7	no	41
Warnings:					
Information:					
8	Non Patent Literature	CertainFitnessDevices-12-2-21-Mitchell_full.pdf	401201 a1ac80240274183b6002b0f442adcdd8be5671f8	no	123
Warnings:					
Information:					
9	Non Patent Literature	AppendixH_PublicUseCBIredacted.pdf	347718 2389628758bfb0a6fbd2b43445e969186d5a7240	no	40
Warnings:					
Information:					
10	Non Patent Literature	RESP-PA06326.pdf	24975240 7c4d3dcb2e0068642f95fc18a37effa1e1d0bc74	no	12
Warnings:					
Information:					
11	Non Patent Literature	RESP-PA06254.pdf	413107 4375fc707ed73d247a227081ac03a52e1ff544d0	no	1
Warnings:					
Information:					
12	Non Patent Literature	InReCertainFitnessDevices-11-5-21-Major-Final_full.pdf	801282 36f8e65ad41a12528388ffef1aef9cb264a70782	no	268
Warnings:					
Information:					
13	Non Patent Literature	InReCertainFitnessDevices-11-12-21-Edwards-Final_full.pdf	642008 abc70facf49fc5cc9a4cea1b30c2b2ce4484c987	no	191
Warnings:					
Information:					

14	Non Patent Literature	InReCertainFitnessDevices-12-17-21-Major_full.pdf	285316 b28948679b60851bcb669d658baf21144fa0b846	no	72
Warnings:					
Information:					
15	Non Patent Literature	RESP-PA06255.pdf	1174325 dd06ee180363eb308c13b2328b9639a23407fb81	no	1
Warnings:					
Information:					
16	Non Patent Literature	HurstExhibit68.pdf	233039 1a9b7172802c746fdf3d4e1f488d7f61a45e1de3	no	1
Warnings:					
Information:					
17	Non Patent Literature	MajorExhibit62.pdf	477317 76fd72b5f5719fb50bd4b856d6d3910b761d1525	no	128
Warnings:					
Information:					
18	Non Patent Literature	MitchellExhibit13.pdf	81538 bc7b9cde8b3c45b77aa551069c7309c4e66e8f31	no	2
Warnings:					
Information:					
19	Non Patent Literature	MitchellExhibit12.pdf	211122 ced25e554880902e807aae88543e58ec61ab5ed9	no	2
Warnings:					
Information:					
20	Non Patent Literature	MitchellExhibit11.pdf	158200 67f74808bf8e8ae1301a21fff4d0e1c1cbc06a7d	no	3
Warnings:					
Information:					

21	Non Patent Literature	MitchellExhibit10.pdf	210674 ee643a1c0a6e72b6daa281763f76151901 3d52ab	no	2
Warnings:					
Information:					
22	Non Patent Literature	MitchellExhibit7.pdf	154015 2b77c236121bfc3442ee8c43ee017e3b8de be646	no	2
Warnings:					
Information:					
23	Non Patent Literature	MitchellExhibit6.pdf	2133797 b14c4de8f45f9e8d0b9032589d14cdb1bad fd82c	no	2
Warnings:					
Information:					
24	Non Patent Literature	MitchellExhibit5.pdf	210004 ca0990cd96b0ed99ec28c92a2e8a47aa7b9 95c11	no	2
Warnings:					
Information:					
25	Non Patent Literature	MitchellExhibit4.pdf	224321 78d7dd3ae9d2120ecc4a4a239344c6cc80f 1b121	no	2
Warnings:					
Information:					
26	Non Patent Literature	MitchellExhibit3.pdf	289810 978aac355064dd085b02b9b6bceb427773 bd2326	no	1
Warnings:					
Information:					
27	Non Patent Literature	MitchellExhibit2.pdf	143622 a5375447a684328dbf536e1b452f69db433 dcd01	no	3
Warnings:					
Information:					

28	Non Patent Literature	RESP-PA06323.pdf	381172 a543fea368934a2c4395e63e0f73ecc30188e412	no	1
Warnings:					
Information:					
29	Non Patent Literature	RESP-PA06247.pdf	1009906 810806810fad24b373a74b72a9b5d525d88df73e	no	2
Warnings:					
Information:					
30	Non Patent Literature	RESP-PA06253.pdf	1231343 3ec841c84bbca55b04ca7aa54e22e52b467d5877	no	1
Warnings:					
Information:					
31	Non Patent Literature	RESP-PA06252.pdf	965232 d0b5753f71e9afe8573ef9c255f8ffb8a0e0fc34	no	1
Warnings:					
Information:					
32	Non Patent Literature	RESP-PA06256.pdf	1681997 a256e11de2ce24db3f09bf7c69be52a99281cdf8	no	1
Warnings:					
Information:					
33	Non Patent Literature	RESP-PA06257.pdf	1347954 f24c25601fb218f032be23231e2059a097294570	no	1
Warnings:					
Information:					
34	Fee Worksheet (SB06)	fee-info.pdf	40104 a7a6954edd8761701049e4a0c6046fa124f30163	no	2
Warnings:					
Information:					
			Total Files Size (in bytes):	43601927	

This Acknowledgement Receipt evidences receipt on the noted date by the USPTO of the indicated documents, characterized by the applicant, and including page counts, where applicable. It serves as evidence of receipt similar to a Post Card, as described in MPEP 503.

New Applications Under 35 U.S.C. 111
If a new application is being filed and the application includes the necessary components for a filing date (see 37 CFR 1.53(b)-(d) and MPEP 506), a Filing Receipt (37 CFR 1.54) will be issued in due course and the date shown on this Acknowledgement Receipt will establish the filing date of the application.
National Stage of an International Application under 35 U.S.C. 371
If a timely submission to enter the national stage of an international application is compliant with the conditions of 35 U.S.C. 371 and other applicable requirements a Form PCT/DO/EO/903 indicating acceptance of the application as a national stage submission under 35 U.S.C. 371 will be issued in addition to the Filing Receipt, in due course.
New International Application Filed with the USPTO as a Receiving Office
If a new international application is being filed and the international application includes the necessary components for an international filing date (see PCT Article 11 and MPEP 1810), a Notification of the International Application Number and of the International Filing Date (Form PCT/RO/105) will be issued in due course, subject to prescriptions concerning national security, and the date shown on this Acknowledgement Receipt will establish the international filing date of the application.

FILED VIA EFS WEB

IN THE UNITED STATES PATENT AND TRADEMARK OFFICE

PATENT

First Named Inventor:	David F. Brueck	Docket No.:	9401-00254
Serial No.:	16/876,579	Examiner:	Patel, Chirag R.
Filed:	05-18-2020	Group Art Unit:	2454
Title:	APPARATUS, SYSEM, AND METHOD FOR MULTI-BITRATE CONTENT STREAMING	Confirmation No.:	3720

TRANSMITTAL LETTER

Mail Stop AMENDMENT
Commissioner of Patents
P.O. Box 1450
Alexandria, VA 22313-1450

Dear Commissioner:

The Examiner's attention is directed to the references listed on the attached Form PTO/SB/08A. Copies of the references are submitted concurrently herewith. Citation of these references is respectfully requested.

No concession is made that these documents are prior art, and Applicant expressly reserves the right to antedate the documents as may be appropriate.

Respectfully submitted,

Dated: April 5, 2022

By: /Brett A. Carlson/
Brett A. Carlson
Reg. No. 39,928

KW Law, LLP
6122 N 7th St, Ste D, Phoenix, AZ 85014
Phone: (602) 344-9885 | Email: brett@kwlaw.co

PTO/SB/08a (01-10)
Approved for use through 07/31/2012. OMB 0651-0031
U.S. Patent and Trademark Office; U.S. DEPARTMENT OF COMMERCE

Under the Paperwork Reduction Act of 1995, no persons are required to respond to a collection of information unless it contains a valid OMB control number.

INFORMATION DISCLOSURE STATEMENT BY APPLICANT

(Not for submission under 37 CFR 1.99)

Application Number	16876579
Filing Date	2020-05-18
First Named Inventor	David F. Brueck
Art Unit	2454
Examiner Name	Chirag Patel
Attorney Docket Number	9401-00254

U.S.PATENTS Remove

Examiner Initial*	Cite No	Patent Number	Kind Code[1]	Issue Date	Name of Patentee or Applicant of cited Document	Pages,Columns,Lines where Relevant Passages or Relevant Figures Appear
	1					

If you wish to add additional U.S. Patent citation information please click the Add button. Add

U.S.PATENT APPLICATION PUBLICATIONS Remove

Examiner Initial*	Cite No	Publication Number	Kind Code[1]	Publication Date	Name of Patentee or Applicant of cited Document	Pages,Columns,Lines where Relevant Passages or Relevant Figures Appear
	1					

If you wish to add additional U.S. Published Application citation information please click the Add button. Add

FOREIGN PATENT DOCUMENTS Remove

Examiner Initial*	Cite No	Foreign Document Number[3]	Country Code[2] i	Kind Code[4]	Publication Date	Name of Patentee or Applicant of cited Document	Pages,Columns,Lines where Relevant Passages or Relevant Figures Appear	T[5]
	1							

If you wish to add additional Foreign Patent Document citation information please click the Add button Add

NON-PATENT LITERATURE DOCUMENTS Remove

Examiner Initials*	Cite No	Include name of the author (in CAPITAL LETTERS), title of the article (when appropriate), title of the item (book, magazine, journal, serial, symposium, catalog, etc), date, pages(s), volume-issue number(s), publisher, city and/or country where published.	T[5]

INFORMATION DISCLOSURE STATEMENT BY APPLICANT (Not for submission under 37 CFR 1.99)	Application Number	16876579
	Filing Date	2020-05-18
	First Named Inventor	David F. Brueck
	Art Unit	2454
	Examiner Name	Chirag Patel
	Attorney Docket Number	9401-00254

	1	Respondents' Post-Hearing Brief (Redacted) dated March 29, 2022 (321 pages).	
	2	Complainants' Post-Hearing Reply Brief (Redacted) dated April 7, 2022 (105 pages).	
	3	Commission Investigative Staff's Post-Hearing Reply Brief (Redacted) dated April 13, 2022 (42 pages).	
	4	Commission Investigative Staff's Post-Hearing Brief (Redacted) dated April 1, 2022 (311 pages).	
	5	Respondents' Reply Post-Hearing Brief (Redacted) dated April 7, 2022 (106 pages).	
	6	Complainants' Post-Hearing Brief (Redacted) dated March 29, 2022 (326 pages).	

If you wish to add additional non-patent literature document citation information please click the Add button Add

EXAMINER SIGNATURE

Examiner Signature		Date Considered	

*EXAMINER: Initial if reference considered, whether or not citation is in conformance with MPEP 609. Draw line through a citation if not in conformance and not considered. Include copy of this form with next communication to applicant.

[1] See Kind Codes of USPTO Patent Documents at www.USPTO.GOV or MPEP 901.04. [2] Enter office that issued the document, by the two-letter code (WIPO Standard ST.3). [3] For Japanese patent documents, the indication of the year of the reign of the Emperor must precede the serial number of the patent document. [4] Kind of document by the appropriate symbols as indicated on the document under WIPO Standard ST.16 if possible. [5] Applicant is to place a check mark here if English language translation is attached.

INFORMATION DISCLOSURE STATEMENT BY APPLICANT (Not for submission under 37 CFR 1.99)	Application Number	16876579
	Filing Date	2020-05-18
	First Named Inventor	David F. Brueck
	Art Unit	2454
	Examiner Name	Chirag Patel
	Attorney Docket Number	9401-00254

CERTIFICATION STATEMENT

Please see 37 CFR 1.97 and 1.98 to make the appropriate selection(s):

That each item of information contained in the information disclosure statement was first cited in any communication from a foreign patent office in a counterpart foreign application not more than three months prior to the filing of the information disclosure statement. See 37 CFR 1.97(e)(1).

OR

☒ That no item of information contained in the information disclosure statement was cited in a communication from a foreign patent office in a counterpart foreign application, and, to the knowledge of the person signing the certification after making reasonable inquiry, no item of information contained in the information disclosure statement was known to any individual designated in 37 CFR 1.56(c) more than three months prior to the filing of the information disclosure statement. See 37 CFR 1.97(e)(2).

☒ See attached certification statement.

The fee set forth in 37 CFR 1.17 (p) has been submitted herewith.

A certification statement is not submitted herewith.

SIGNATURE

A signature of the applicant or representative is required in accordance with CFR 1.33, 10.18. Please see CFR 1.4(d) for the form of the signature.

Signature	/Brett A. Carlson/	Date (YYYY-MM-DD)	2022-04-20
Name/Print	Brett A. Carlson	Registration Number	39928

This collection of information is required by 37 CFR 1.97 and 1.98. The information is required to obtain or retain a benefit by the public which is to file (and by the USPTO to process) an application. Confidentiality is governed by 35 U.S.C. 122 and 37 CFR 1.14. This collection is estimated to take 1 hour to complete, including gathering, preparing and submitting the completed application form to the USPTO. Time will vary depending upon the individual case. Any comments on the amount of time you require to complete this form and/or suggestions for reducing this burden, should be sent to the Chief Information Officer, U.S. Patent and Trademark Office, U.S. Department of Commerce, P.O. Box 1450, Alexandria, VA 22313-1450. DO NOT SEND FEES OR COMPLETED FORMS TO THIS ADDRESS. **SEND TO: Commissioner for Patents, P.O. Box 1450, Alexandria, VA 22313-1450.**

Privacy Act Statement

The Privacy Act of 1974 (P.L. 93-579) requires that you be given certain information in connection with your submission of the attached form related to a patent application or patent. Accordingly, pursuant to the requirements of the Act, please be advised that: (1) the general authority for the collection of this information is 35 U.S.C. 2(b)(2); (2) furnishing of the information solicited is voluntary; and (3) the principal purpose for which the information is used by the U.S. Patent and Trademark Office is to process and/or examine your submission related to a patent application or patent. If you do not furnish the requested information, the U.S. Patent and Trademark Office may not be able to process and/or examine your submission, which may result in termination of proceedings or abandonment of the application or expiration of the patent.

The information provided by you in this form will be subject to the following routine uses:

1. The information on this form will be treated confidentially to the extent allowed under the Freedom of Information Act (5 U.S.C. 552) and the Privacy Act (5 U.S.C. 552a). Records from this system of records may be disclosed to the Department of Justice to determine whether the Freedom of Information Act requires disclosure of these record s.

2. A record from this system of records may be disclosed, as a routine use, in the course of presenting evidence to a court, magistrate, or administrative tribunal, including disclosures to opposing counsel in the course of settlement negotiations.

3. A record in this system of records may be disclosed, as a routine use, to a Member of Congress submitting a request involving an individual, to whom the record pertains, when the individual has requested assistance from the Member with respect to the subject matter of the record.

4. A record in this system of records may be disclosed, as a routine use, to a contractor of the Agency having need for the information in order to perform a contract. Recipients of information shall be required to comply with the requirements of the Privacy Act of 1974, as amended, pursuant to 5 U.S.C. 552a(m).

5. A record related to an International Application filed under the Patent Cooperation Treaty in this system of records may be disclosed, as a routine use, to the International Bureau of the World Intellectual Property Organization, pursuant to the Patent Cooperation Treaty.

6. A record in this system of records may be disclosed, as a routine use, to another federal agency for purposes of National Security review (35 U.S.C. 181) and for review pursuant to the Atomic Energy Act (42 U.S.C. 218(c)).

7. A record from this system of records may be disclosed, as a routine use, to the Administrator, General Services, or his/her designee, during an inspection of records conducted by GSA as part of that agency's responsibility to recommend improvements in records management practices and programs, under authority of 44 U.S.C. 2904 and 2906. Such disclosure shall be made in accordance with the GSA regulations governing inspection of records for this purpose, and any other relevant (i.e., GSA or Commerce) directive. Such disclosure shall not be used to make determinations about individuals.

8. A record from this system of records may be disclosed, as a routine use, to the public after either publication of the application pursuant to 35 U.S.C. 122(b) or issuance of a patent pursuant to 35 U.S.C. 151. Further, a record may be disclosed, subject to the limitations of 37 CFR 1.14, as a routine use, to the public if the record was filed in an application which became abandoned or in which the proceedings were terminated and which application is referenced by either a published application, an application open to public inspections or an issued patent.

9. A record from this system of records may be disclosed, as a routine use, to a Federal, State, or local law enforcement agency, if the USPTO becomes aware of a violation or potential violation of law or regulation.

Electronic Acknowledgement Receipt

EFS ID:	45522433
Application Number:	16876579
International Application Number:	
Confirmation Number:	3720
Title of Invention:	APPARATUS, SYSTEM, AND METHOD FOR MULTI-BITRATE CONTENT STREAMING
First Named Inventor/Applicant Name:	DAVID F. BRUECK
Customer Number:	70560
Filer:	Brett Carlson/Sarah Flaaen
Filer Authorized By:	Brett Carlson
Attorney Docket Number:	9401-00254
Receipt Date:	20-APR-2022
Filing Date:	18-MAY-2020
Time Stamp:	18:15:19
Application Type:	Utility under 35 USC 111(a)

Payment information:

Submitted with Payment	no

File Listing:

Document Number	Document Description	File Name	File Size(Bytes)/ Message Digest	Multi Part /.zip	Pages (if appl.)
1	Transmittal Letter	9401-00254_IDS_TL_04202022.pdf	24247 283adb11c98ffc41ee9462be59ea9dce15e81b5b	no	1

Warnings:

Information:					
2	Information Disclosure Statement (IDS) Form (SB08)	9401-00254_IDS_04202022.pdf	612489 6c6d6087fc3e0e6d6ef14525cd2246757678 5bdf	no	4

Warnings:

Information:

A U.S. Patent Number Citation or a U.S. Publication Number Citation is required in the Information Disclosure Statement (IDS) form for autoloading of data into USPTO systems. You may remove the form to add the required data in order to correct the Informational Message if you are citing U.S. References. If you chose not to include U.S. References, the image of the form will be processed and be made available within the Image File Wrapper (IFW) system. However, no data will be extracted from this form. Any additional data such as Foreign Patent Documents or Non Patent Literature will be manually reviewed and keyed into USPTO systems.

Total Files Size (in bytes):	636736

This Acknowledgement Receipt evidences receipt on the noted date by the USPTO of the indicated documents, characterized by the applicant, and including page counts, where applicable. It serves as evidence of receipt similar to a Post Card, as described in MPEP 503.

New Applications Under 35 U.S.C. 111
If a new application is being filed and the application includes the necessary components for a filing date (see 37 CFR 1.53(b)-(d) and MPEP 506), a Filing Receipt (37 CFR 1.54) will be issued in due course and the date shown on this Acknowledgement Receipt will establish the filing date of the application.
National Stage of an International Application under 35 U.S.C. 371
If a timely submission to enter the national stage of an international application is compliant with the conditions of 35 U.S.C. 371 and other applicable requirements a Form PCT/DO/EO/903 indicating acceptance of the application as a national stage submission under 35 U.S.C. 371 will be issued in addition to the Filing Receipt, in due course.
New International Application Filed with the USPTO as a Receiving Office
If a new international application is being filed and the international application includes the necessary components for an international filing date (see PCT Article 11 and MPEP 1810), a Notification of the International Application Number and of the International Filing Date (Form PCT/RO/105) will be issued in due course, subject to prescriptions concerning national security, and the date shown on this Acknowledgement Receipt will establish the international filing date of the application.

FILED VIA EFS WEB

IN THE UNITED STATES PATENT AND TRADEMARK OFFICE

PATENT

First Named Inventor:	David F. Brueck	Docket No.:	9401-00254
Serial No.:	16/876,579	Examiner:	Patel, Chirag R.
Filed:	05-18-2020	Group Art Unit:	2454
Title:	APPARATUS, SYSEM, AND METHOD FOR MULTI-BITRATE CONTENT STREAMING	Confirmation No.:	3720

TRANSMITTAL LETTER

Mail Stop AMENDMENT
Commissioner of Patents
P.O. Box 1450
Alexandria, VA 22313-1450

Dear Commissioner:

The Examiner's attention is directed to the references listed on the attached Form PTO/SB/08A. Copies of the references are submitted concurrently herewith. Citation of these references is respectfully requested.

No concession is made that these documents are prior art, and Applicant expressly reserves the right to antedate the documents as may be appropriate.

Respectfully submitted,

Dated: April 20, 2022

By: /Brett A. Carlson/
Brett A. Carlson
Reg. No. 39,928

KW Law, LLP
6122 N 7th St, Ste D, Phoenix, AZ 85014
Phone: (602) 344-9885 | Email: brett@kwlaw.co

Electronic Acknowledgement Receipt

EFS ID:	45522567
Application Number:	16876579
International Application Number:	
Confirmation Number:	3720
Title of Invention:	APPARATUS, SYSTEM, AND METHOD FOR MULTI-BITRATE CONTENT STREAMING
First Named Inventor/Applicant Name:	DAVID F. BRUECK
Customer Number:	70560
Filer:	Brett Carlson/Sarah Flaaen
Filer Authorized By:	Brett Carlson
Attorney Docket Number:	9401-00254
Receipt Date:	20-APR-2022
Filing Date:	18-MAY-2020
Time Stamp:	18:30:21
Application Type:	Utility under 35 USC 111(a)

Payment information:

Submitted with Payment	no

File Listing:

Document Number	Document Description	File Name	File Size(Bytes)/ Message Digest	Multi Part /.zip	Pages (if appl.)
1	Non Patent Literature	Respondents_Reply_Post-Hearing_Brief_CBI_Redacted.pdf	773383 335513b349607a2e1c13a79e65d0f2e4697d280f	no	106

Warnings:

Information:					
2	Non Patent Literature	Staffs_PostHB_Redacted.pdf	3739526 2d22e1788c31115331ad5984ca3364796613eb93	no	311
Warnings:					
Information:					
3	Non Patent Literature	Staff_Post-Hearing_Reply_Brief_Redacted.pdf	439576 65d271e4f65aefbd29cf3296be916f7b148aa756	no	42
Warnings:					
Information:					
4	Non Patent Literature	Respondents_Post-Hearing_Brief_Redacted.pdf	2139825 bc1e147ccdd8312411539ebaa7e8c84ea92b327f	no	321
Warnings:					
Information:					
5	Non Patent Literature	DISH_Initial_Post_Hearing_Brief_Redacted.pdf	1833391 1f11abbc363084cf6e10499b2c20eef9c4d02475	no	326
Warnings:					
Information:					
6	Non Patent Literature	Complainants_Post-Hearing_Reply_Brief_Redacted.pdf	863624 28cf312f6deda2c737df1b8036e18aaba6c19c52	no	105
Warnings:					
Information:					
			Total Files Size (in bytes):	9789325	

This Acknowledgement Receipt evidences receipt on the noted date by the USPTO of the indicated documents, characterized by the applicant, and including page counts, where applicable. It serves as evidence of receipt similar to a Post Card, as described in MPEP 503.

New Applications Under 35 U.S.C. 111
If a new application is being filed and the application includes the necessary components for a filing date (see 37 CFR 1.53(b)-(d) and MPEP 506), a Filing Receipt (37 CFR 1.54) will be issued in due course and the date shown on this Acknowledgement Receipt will establish the filing date of the application.
National Stage of an International Application under 35 U.S.C. 371
If a timely submission to enter the national stage of an international application is compliant with the conditions of 35 U.S.C. 371 and other applicable requirements a Form PCT/DO/EO/903 indicating acceptance of the application as a national stage submission under 35 U.S.C. 371 will be issued in addition to the Filing Receipt, in due course.
New International Application Filed with the USPTO as a Receiving Office
If a new international application is being filed and the international application includes the necessary components for an international filing date (see PCT Article 11 and MPEP 1810), a Notification of the International Application Number and of the International Filing Date (Form PCT/RO/105) will be issued in due course, subject to prescriptions concerning national security, and the date shown on this Acknowledgement Receipt will establish the international filing date of the application.

UNITED STATES PATENT AND TRADEMARK OFFICE

UNITED STATES DEPARTMENT OF COMMERCE
United States Patent and Trademark Office
Address: COMMISSIONER FOR PATENTS
P.O. Box 1450
Alexandria, Virginia 22313-1450
www.uspto.gov

NOTICE OF ALLOWANCE AND FEE(S) DUE

70560 7590 05/20/2022
KW LAW LLP (Dish Technologies L.L.C.)
6122 N 7th St Suite D
Phoenix, AZ 85014

EXAMINER
PATEL, CHIRAG R

ART UNIT	PAPER NUMBER
2454	

DATE MAILED: 05/20/2022

APPLICATION NO.	FILING DATE	FIRST NAMED INVENTOR	ATTORNEY DOCKET NO.	CONFIRMATION NO.
16/876,579	05/18/2020	DAVID F. BRUECK	9401-00254	3720

TITLE OF INVENTION: APPARATUS, SYSTEM, AND METHOD FOR MULTI-BITRATE CONTENT STREAMING

APPLN. TYPE	ENTITY STATUS	ISSUE FEE DUE	PUBLICATION FEE DUE	PREV. PAID ISSUE FEE	TOTAL FEE(S) DUE	DATE DUE
nonprovisional	UNDISCOUNTED	$1200	$0.00	$0.00	$1200	08/22/2022

THE APPLICATION IDENTIFIED ABOVE HAS BEEN EXAMINED AND IS ALLOWED FOR ISSUANCE AS A PATENT. PROSECUTION ON THE MERITS IS CLOSED. THIS NOTICE OF ALLOWANCE IS NOT A GRANT OF PATENT RIGHTS. THIS APPLICATION IS SUBJECT TO WITHDRAWAL FROM ISSUE AT THE INITIATIVE OF THE OFFICE OR UPON PETITION BY THE APPLICANT. SEE 37 CFR 1.313 AND MPEP 1308.

THE ISSUE FEE AND PUBLICATION FEE (IF REQUIRED) MUST BE PAID WITHIN THREE MONTHS FROM THE MAILING DATE OF THIS NOTICE OR THIS APPLICATION SHALL BE REGARDED AS ABANDONED. THIS STATUTORY PERIOD CANNOT BE EXTENDED. SEE 35 U.S.C. 151. THE ISSUE FEE DUE INDICATED ABOVE DOES NOT REFLECT A CREDIT FOR ANY PREVIOUSLY PAID ISSUE FEE IN THIS APPLICATION. IF AN ISSUE FEE HAS PREVIOUSLY BEEN PAID IN THIS APPLICATION (AS SHOWN ABOVE), THE RETURN OF PART B OF THIS FORM WILL BE CONSIDERED A REQUEST TO REAPPLY THE PREVIOUSLY PAID ISSUE FEE TOWARD THE ISSUE FEE NOW DUE.

HOW TO REPLY TO THIS NOTICE:

I. Review the ENTITY STATUS shown above. If the ENTITY STATUS is shown as SMALL or MICRO, verify whether entitlement to that entity status still applies.

If the ENTITY STATUS is the same as shown above, pay the TOTAL FEE(S) DUE shown above.

If the ENTITY STATUS is changed from that shown above, on PART B - FEE(S) TRANSMITTAL, complete section number 5 titled "Change in Entity Status (from status indicated above)".

For purposes of this notice, small entity fees are 1/2 the amount of undiscounted fees, and micro entity fees are 1/2 the amount of small entity fees.

II. PART B - FEE(S) TRANSMITTAL, or its equivalent, must be completed and returned to the United States Patent and Trademark Office (USPTO) with your ISSUE FEE and PUBLICATION FEE (if required). If you are charging the fee(s) to your deposit account, section "4b" of Part B - Fee(s) Transmittal should be completed. If an equivalent of Part B is filed, a request to reapply a previously paid issue fee must be clearly made, and delays in processing may occur due to the difficulty in recognizing the paper as an equivalent of Part B.

III. All communications regarding this application must give the application number. Please direct all communications prior to issuance to Mail Stop ISSUE FEE unless advised to the contrary.

IMPORTANT REMINDER: Maintenance fees are due in utility patents issuing on applications filed on or after Dec. 12, 1980. It is patentee's responsibility to ensure timely payment of maintenance fees when due. More information is available at www.uspto.gov/PatentMaintenanceFees.

DISH EXHIBIT 2002, Page 1325
Aylo Freesites Ltd. v. Dish Technologies L.L.C.
IPR2024-00047

PART B - FEE(S) TRANSMITTAL

Complete and send this form, together with applicable fee(s), by mail or fax, or via EFS-Web.

By mail, send to: Mail Stop ISSUE FEE
Commissioner for Patents
P.O. Box 1450
Alexandria, Virginia 22313-1450

By fax, send to: (571)-273-2885

INSTRUCTIONS: This form should be used for transmitting the ISSUE FEE and PUBLICATION FEE (if required). Blocks 1 through 5 should be completed where appropriate. All further correspondence including the Patent, advance orders and notification of maintenance fees will be mailed to the current correspondence address as indicated unless corrected below or directed otherwise in Block 1, by (a) specifying a new correspondence address; and/or (b) indicating a separate "FEE ADDRESS" for maintenance fee notifications.

CURRENT CORRESPONDENCE ADDRESS (Note: Use Block 1 for any change of address)

70560 7590 05/20/2022
KW LAW LLP (Dish Technologies L.L.C.)
6122 N 7th St Suite D
Phoenix, AZ 85014

Note: A certificate of mailing can only be used for domestic mailings of the Fee(s) Transmittal. This certificate cannot be used for any other accompanying papers. Each additional paper, such as an assignment or formal drawing, must have its own certificate of mailing or transmission.

Certificate of Mailing or Transmission

I hereby certify that this Fee(s) Transmittal is being deposited with the United States Postal Service with sufficient postage for first class mail in an envelope addressed to the Mail Stop ISSUE FEE address above, or being transmitted to the USPTO via EFS-Web or by facsimile to (571) 273-2885, on the date below.

(Typed or printed name)
(Signature)
(Date)

APPLICATION NO.	FILING DATE	FIRST NAMED INVENTOR	ATTORNEY DOCKET NO.	CONFIRMATION NO.
16/876,579	05/18/2020	DAVID F. BRUECK	9401-00254	3720

TITLE OF INVENTION: APPARATUS, SYSTEM, AND METHOD FOR MULTI-BITRATE CONTENT STREAMING

APPLN. TYPE	ENTITY STATUS	ISSUE FEE DUE	PUBLICATION FEE DUE	PREV. PAID ISSUE FEE	TOTAL FEE(S) DUE	DATE DUE
nonprovisional	UNDISCOUNTED	$1200	$0.00	$0.00	$1200	08/22/2022

EXAMINER	ART UNIT	CLASS-SUBCLASS
PATEL, CHIRAG R	2454	709-219000

1. Change of correspondence address or indication of "Fee Address" (37 CFR 1.363).

❑ Change of correspondence address (or Change of Correspondence Address form PTO/AIA/122 or PTO/SB/122) attached.

❑ "Fee Address" indication (or "Fee Address" Indication form PTO/AIA/47 or PTO/SB/47; Rev 03-02 or more recent) attached. **Use of a Customer Number is required.**

2. For printing on the patent front page, list
(1) The names of up to 3 registered patent attorneys or agents OR, alternatively,
(2) The name of a single firm (having as a member a registered attorney or agent) and the names of up to 2 registered patent attorneys or agents. If no name is listed, no name will be printed.

1_____
2_____
3_____

3. ASSIGNEE NAME AND RESIDENCE DATA TO BE PRINTED ON THE PATENT (print or type)

PLEASE NOTE: Unless an assignee is identified below, no assignee data will appear on the patent. If an assignee is identified below, the document must have been previously recorded, or filed for recordation, as set forth in 37 CFR 3.11 and 37 CFR 3.81(a). Completion of this form is NOT a substitute for filing an assignment.

(A) NAME OF ASSIGNEE (B) RESIDENCE: (CITY and STATE OR COUNTRY)

Please check the appropriate assignee category or categories (will not be printed on the patent) : ❑ Individual ❑ Corporation or other private group entity ❑ Government

4a. Fees submitted: ❑Issue Fee ❑Publication Fee (if required) ❑Advance Order - # of Copies _____

4b. Method of Payment: *(Please first reapply any previously paid fee shown above)*

❑ Electronic Payment via EFS-Web ❑ Enclosed check ❑ Non-electronic payment by credit card (Attach form PTO-2038)

❑ The Director is hereby authorized to charge the required fee(s), any deficiency, or credit any overpayment to Deposit Account No. _____

5. **Change in Entity Status** (from status indicated above)

❑ Applicant certifying micro entity status. See 37 CFR 1.29

❑ Applicant asserting small entity status. See 37 CFR 1.27

❑ Applicant changing to regular undiscounted fee status.

NOTE: Absent a valid certification of Micro Entity Status (see forms PTO/SB/15A and 15B), issue fee payment in the micro entity amount will not be accepted at the risk of application abandonment.
NOTE: If the application was previously under micro entity status, checking this box will be taken to be a notification of loss of entitlement to micro entity status.
NOTE: Checking this box will be taken to be a notification of loss of entitlement to small or micro entity status, as applicable.

NOTE: This form must be signed in accordance with 37 CFR 1.31 and 1.33. See 37 CFR 1.4 for signature requirements and certifications.

Authorized Signature _____ Date _____

Typed or printed name _____ Registration No. _____

UNITED STATES DEPARTMENT OF COMMERCE
United States Patent and Trademark Office
Address: COMMISSIONER FOR PATENTS
P.O. Box 1450
Alexandria, Virginia 22313-1450
www.uspto.gov

APPLICATION NO.	FILING DATE	FIRST NAMED INVENTOR	ATTORNEY DOCKET NO.	CONFIRMATION NO.
16/876,579	05/18/2020	DAVID F. BRUECK	9401-00254	3720

70560 7590 05/20/2022
KW LAW LLP (Dish Technologies L.L.C.)
6122 N 7th St Suite D
Phoenix, AZ 85014

EXAMINER
PATEL, CHIRAG R

ART UNIT	PAPER NUMBER
2454	

DATE MAILED: 05/20/2022

Determination of Patent Term Adjustment under 35 U.S.C. 154 (b)
(Applications filed on or after May 29, 2000)

The Office has discontinued providing a Patent Term Adjustment (PTA) calculation with the Notice of Allowance.

Section 1(h)(2) of the AIA Technical Corrections Act amended 35 U.S.C. 154(b)(3)(B)(i) to eliminate the requirement that the Office provide a patent term adjustment determination with the notice of allowance. See Revisions to Patent Term Adjustment, 78 Fed. Reg. 19416, 19417 (Apr. 1, 2013). Therefore, the Office is no longer providing an initial patent term adjustment determination with the notice of allowance. The Office will continue to provide a patent term adjustment determination with the Issue Notification Letter that is mailed to applicant approximately three weeks prior to the issue date of the patent, and will include the patent term adjustment on the patent. Any request for reconsideration of the patent term adjustment determination (or reinstatement of patent term adjustment) should follow the process outlined in 37 CFR 1.705.

Any questions regarding the Patent Term Extension or Adjustment determination should be directed to the Office of Patent Legal Administration at (571)-272-7702. Questions relating to issue and publication fee payments should be directed to the Customer Service Center of the Office of Patent Publication at 1-(888)-786-0101 or (571)-272-4200.

DISH EXHIBIT 2002, Page 1327
Aylo Freesites Ltd. v. Dish Technologies L.L.C.
IPR2024-00047

OMB Clearance and PRA Burden Statement for PTOL-85 Part B

The Paperwork Reduction Act (PRA) of 1995 requires Federal agencies to obtain Office of Management and Budget approval before requesting most types of information from the public. When OMB approves an agency request to collect information from the public, OMB (i) provides a valid OMB Control Number and expiration date for the agency to display on the instrument that will be used to collect the information and (ii) requires the agency to inform the public about the OMB Control Number's legal significance in accordance with 5 CFR 1320.5(b).

The information collected by PTOL-85 Part B is required by 37 CFR 1.311. The information is required to obtain or retain a benefit by the public which is to file (and by the USPTO to process) an application. Confidentiality is governed by 35 U.S.C. 122 and 37 CFR 1.14. This collection is estimated to take 30 minutes to complete, including gathering, preparing, and submitting the completed application form to the USPTO. Time will vary depending upon the individual case. Any comments on the amount of time you require to complete this form and/or suggestions for reducing this burden, should be sent to the Chief Information Officer, U.S. Patent and Trademark Office, U.S. Department of Commerce, P.O. Box 1450, Alexandria, Virginia 22313-1450. DO NOT SEND FEES OR COMPLETED FORMS TO THIS ADDRESS. SEND TO: Commissioner for Patents, P.O. Box 1450, Alexandria, Virginia 22313-1450. Under the Paperwork Reduction Act of 1995, no persons are required to respond to a collection of information unless it displays a valid OMB control number.

Privacy Act Statement

The Privacy Act of 1974 (P.L. 93-579) requires that you be given certain information in connection with your submission of the attached form related to a patent application or patent. Accordingly, pursuant to the requirements of the Act, please be advised that: (1) the general authority for the collection of this information is 35 U.S.C. 2(b)(2); (2) furnishing of the information solicited is voluntary; and (3) the principal purpose for which the information is used by the U.S. Patent and Trademark Office is to process and/or examine your submission related to a patent application or patent. If you do not furnish the requested information, the U.S. Patent and Trademark Office may not be able to process and/or examine your submission, which may result in termination of proceedings or abandonment of the application or expiration of the patent.

The information provided by you in this form will be subject to the following routine uses:

1. The information on this form will be treated confidentially to the extent allowed under the Freedom of Information Act (5 U.S.C. 552) and the Privacy Act (5 U.S.C 552a). Records from this system of records may be disclosed to the Department of Justice to determine whether disclosure of these records is required by the Freedom of Information Act.
2. A record from this system of records may be disclosed, as a routine use, in the course of presenting evidence to a court, magistrate, or administrative tribunal, including disclosures to opposing counsel in the course of settlement negotiations.
3. A record in this system of records may be disclosed, as a routine use, to a Member of Congress submitting a request involving an individual, to whom the record pertains, when the individual has requested assistance from the Member with respect to the subject matter of the record.
4. A record in this system of records may be disclosed, as a routine use, to a contractor of the Agency having need for the information in order to perform a contract. Recipients of information shall be required to comply with the requirements of the Privacy Act of 1974, as amended, pursuant to 5 U.S.C. 552a(m).
5. A record related to an International Application filed under the Patent Cooperation Treaty in this system of records may be disclosed, as a routine use, to the International Bureau of the World Intellectual Property Organization, pursuant to the Patent Cooperation Treaty.
6. A record in this system of records may be disclosed, as a routine use, to another federal agency for purposes of National Security review (35 U.S.C. 181) and for review pursuant to the Atomic Energy Act (42 U.S.C. 218(c)).
7. A record from this system of records may be disclosed, as a routine use, to the Administrator, General Services, or his/her designee, during an inspection of records conducted by GSA as part of that agency's responsibility to recommend improvements in records management practices and programs, under authority of 44 U.S.C. 2904 and 2906. Such disclosure shall be made in accordance with the GSA regulations governing inspection of records for this purpose, and any other relevant (i.e., GSA or Commerce) directive. Such disclosure shall not be used to make determinations about individuals.
8. A record from this system of records may be disclosed, as a routine use, to the public after either publication of the application pursuant to 35 U.S.C. 122(b) or issuance of a patent pursuant to 35 U.S.C. 151. Further, a record may be disclosed, subject to the limitations of 37 CFR 1.14, as a routine use, to the public if the record was filed in an application which became abandoned or in which the proceedings were terminated and which application is referenced by either a published application, an application open to public inspection or an issued patent.
9. A record from this system of records may be disclosed, as a routine use, to a Federal, State, or local law enforcement agency, if the USPTO becomes aware of a violation or potential violation of law or regulation.

Notice of Allowability	Application No. 16/876,579	Applicant(s) BRUECK et al.	
	Examiner CHIRAG R PATEL	Art Unit 2454	AIA (FITF) Status No

-- The MAILING DATE of this communication appears on the cover sheet with the correspondence address--

All claims being allowable, PROSECUTION ON THE MERITS IS (OR REMAINS) CLOSED in this application. If not included herewith (or previously mailed), a Notice of Allowance (PTOL-85) or other appropriate communication will be mailed in due course. **THIS NOTICE OF ALLOWABILITY IS NOT A GRANT OF PATENT RIGHTS.** This application is subject to withdrawal from issue at the initiative of the Office or upon petition by the applicant. See 37 CFR 1.313 and MPEP 1308.

1. ☑ This communication is responsive to the amendment filed on April 5, 2022.
   ☐ A declaration(s)/affidavit(s) under **37 CFR 1.130(b)** was/were filed on _____.

2. ☐ An election was made by the applicant in response to a restriction requirement set forth during the interview on _____; the restriction requirement and election have been incorporated into this action.

3. ☑ The allowed claim(s) is/are 1-30 . As a result of the allowed claim(s), you may be eligible to benefit from the **Patent Prosecution Highway** program at a participating intellectual property office for the corresponding application. For more information, please see **http://www.uspto.gov/patents/init_events/pph/index.jsp** or send an inquiry to **PPHfeedback@uspto.gov.**

4. ☐ Acknowledgment is made of a claim for foreign priority under 35 U.S.C. § 119(a)-(d) or (f).

   Certified copies:

   a) ☐ All b) ☐ Some* c) ☐ None of the:

   1. ☐ Certified copies of the priority documents have been received.
   2. ☐ Certified copies of the priority documents have been received in Application No. _____ .
   3. ☐ Copies of the certified copies of the priority documents have been received in this national stage application from the International Bureau (PCT Rule 17.2(a)).

   * Certified copies not received: _____ .

Applicant has THREE MONTHS FROM THE "MAILING DATE" of this communication to file a reply complying with the requirements noted below. Failure to timely comply will result in ABANDONMENT of this application.
THIS THREE-MONTH PERIOD IS NOT EXTENDABLE.

5. ☐ CORRECTED DRAWINGS (as "replacement sheets") must be submitted.
   ☐ including changes required by the attached Examiner's Amendment / Comment or in the Office action of Paper No./Mail Date _____ .

   Identifying indicia such as the application number (see 37 CFR 1.84(c)) should be written on the drawings in the front (not the back) of each sheet. Replacement sheet(s) should be labeled as such in the header according to 37 CFR 1.121(d).

6. ☐ DEPOSIT OF and/or INFORMATION about the deposit of BIOLOGICAL MATERIAL must be submitted. Note the attached Examiner's comment regarding REQUIREMENT FOR THE DEPOSIT OF BIOLOGICAL MATERIAL.

Attachment(s)

1. ☐ Notice of References Cited (PTO-892)
2. ☑ Information Disclosure Statements (PTO/SB/08), Paper No./Mail Date 4/5/22, 4/20/22.
3. ☐ Examiner's Comment Regarding Requirement for Deposit of Biological Material _____.
4. ☐ Interview Summary (PTO-413), Paper No./Mail Date. _____.
5. ☐ Examiner's Amendment/Comment
6. ☑ Examiner's Statement of Reasons for Allowance
7. ☐ Other _____.

/CHIRAG R PATEL/
Primary Examiner, Art Unit 2454

DISH EXHIBIT 2002, Page 1329
Aylo Freesites Ltd. v. Dish Technologies L.L.C.
IPR2024-00047

Notice of Pre-AIA or AIA Status

The present application is being examined under the pre-AIA first to invent provisions.

Allowable Subject Matter

Claims 1-30 are allowed.

The following is an examiner's statement of reasons for allowance: Please refer to the notice of allowances mailed on January 5, 2022 and February 2, 2022.

Any comments considered necessary by applicant must be submitted no later than the payment of the issue fee and, to avoid processing delays, should preferably accompany the issue fee. Such submissions should be clearly labeled "Comments on Statement of Reasons for Allowance."

Conclusion

Any inquiry concerning this communication or earlier communications from the examiner should be directed to Chirag R Patel whose telephone number is (571)272-7966. The examiner can normally be reached on Monday to Friday from 8:00AM to 4:30PM. If attempts to reach the examiner by telephone are unsuccessful, the examiner's supervisor, Glenton Burgess, can be reached on 571-272-3949. The fax phone number for the organization where this application or proceeding is assigned is 571-273-8300.

Information regarding the status of an application may be obtained from the Patent Application Information Retrieval (PAIR) system. Status information for published applications may be obtained from either Private PAIR or Public PAIR. Status information for unpublished applications is available through Private PAIR only. For more information about the PAIR system, see http://pairdirect.uspto.gov. Should you have questions on access to the Private

PAIR system, contact the Electronic Business Center (EBC) at 866-217-9197

(toll free).

/Chirag R Patel/
Primary Examiner, Art Unit 2454

Index of Claims	Application/Control No.	Applicant(s)/Patent Under Reexamination
	16/876,579	BRUECK et al.
	Examiner	**Art Unit**
	CHIRAG R PATEL	2454

✓	Rejected	-	Cancelled	N	Non-Elected	A	Appeal
=	Allowed	÷	Restricted	I	Interference	O	Objected

CLAIMS

☑ Claims renumbered in the same order as presented by applicant ☐ CPA ☑ T.D. ☐ R.1.47

CLAIM		DATE								
Final	Original	06/12/2020	09/10/2021	12/15/2021	01/25/2022	03/04/2022	05/13/2022			
	1	✓	=	=	=	=	=			
	2	✓	=	=	=	=	=			
	3	✓	=	=	=	=	=			
	4	✓	=	=	=	=	=			
	5	✓	=	=	=	=	=			
	6	✓	=	=	=	=	=			
	7	✓	=	=	=	=	=			
	8	✓	=	=	=	=	=			
	9	✓	=	=	=	=	=			
	10	✓	=	=	=	=	=			
	11	✓	=	=	=	=	=			
	12	✓	=	=	=	=	=			
	13	✓	=	=	=	=	=			
	14	✓	=	=	=	=	=			
	15	✓	=	=	=	=	=			
	16	✓	=	=	=	=	=			
	17	✓	=	=	=	=	=			
	18	✓	=	=	=	=	=			
	19	✓	=	=	=	=	=			
	20	✓	=	=	=	=	=			
	21	✓	=	=	=	=	=			
	22	✓	=	=	=	=	=			
	23	✓	=	=	=	=	=			
	24	✓	=	=	=	=	=			
	25	✓	=	=	=	=	=			
	26	✓	=	=	=	=	=			
	27	✓	=	=	=	=	=			
	28	✓	=	=	=	=	=			
	29	✓	=	=	=	=	=			
	30	✓	=	=	=	=	=			

Issue Classification	Application/Control No.	Applicant(s)/Patent Under Reexamination
	16/876,579	BRUECK et al.
	Examiner	**Art Unit**
	CHIRAG R PATEL	2454

CPC						
Symbol					**Type**	**Version**
H04L	/	65	/	70	F	2022-05-01
H04L	/	47	/	801	I	2013-01-01
H04L	/	47	/	12	I	2013-01-01
G06F	/	16	/	71	I	2019-01-01
G06F	/	16	/	183	I	2019-01-01
H04N	/	7	/	24	I	2013-01-01
H04N	/	21	/	23439	I	2013-01-01
H04N	/	21	/	4331	I	2013-01-01
H04N	/	21	/	84	I	2013-01-01
H04N	/	21	/	8456	I	2013-01-01
H04L	/	65	/	80	I	2013-01-01
H04L	/	65	/	61	I	2022-05-01
H04L	/	65	/	65	I	2022-05-01
H04L	/	65	/	1101	I	2022-05-01
H04L	/	67	/	60	I	2022-05-01
H04L	/	67	/	568	I	2022-05-01
H04L	/	67	/	02	I	2013-01-01
H04L	/	65	/	1069	I	2013-01-01
H04N	/	21	/	2662	I	2013-01-01

CPC Combination Sets								
Symbol					**Type**	**Set**	**Ranking**	**Version**
	/		/					

NONE (Assistant Examiner)	(Date)	**Total Claims Allowed:** 30	
/CHIRAG R PATEL/ Primary Examiner, Art Unit 2454 (Primary Examiner)	13 May 2022 (Date)	O.G. Print Claim(s) 1	O.G. Print Figure 4

U.S. Patent and Trademark Office

Part of Paper No.: 20220513

Issue Classification	Application/Control No.	Applicant(s)/Patent Under Reexamination
	16/876,579	BRUECK et al.
	Examiner	**Art Unit**
	CHIRAG R PATEL	2454

INTERNATIONAL CLASSIFICATION				
CLAIMED				
H04L	/	29	/	06

NON-CLAIMED				
	/		/	

US ORIGINAL CLASSIFICATION	
CLASS	**SUBCLASS**

CROSS REFERENCES(S)						
CLASS	**SUBCLASS (ONE SUBCLASS PER BLOCK)**					

NONE (Assistant Examiner)	(Date)	**Total Claims Allowed:** 30	
/CHIRAG R PATEL/ Primary Examiner, Art Unit 2454 (Primary Examiner)	13 May 2022 (Date)	O.G. Print Claim(s) 1	O.G. Print Figure 4

Issue Classification	Application/Control No.	Applicant(s)/Patent Under Reexamination
	16/876,579	BRUECK et al.
	Examiner	**Art Unit**
	CHIRAG R PATEL	2454

☑ Claims renumbered in the same order as presented by applicant ☐ CPA ☑ T.D. ☐ R.1.47

CLAIMS

Final	Original	Final	Original	Final	Original	Final	Original	Final	Original	Final	Original	Final	Original	Final	Original
	1		10		19		28								
	2		11		20		29								
	3		12		21		30								
	4		13		22										
	5		14		23										
	6		15		24										
	7		16		25										
	8		17		26										
	9		18		27										

NONE (Assistant Examiner)	(Date)	**Total Claims Allowed:** 30	
/CHIRAG R PATEL/ Primary Examiner, Art Unit 2454 (Primary Examiner)	13 May 2022 (Date)	O.G. Print Claim(s) 1	O.G. Print Figure 4

Search Notes	Application/Control No.	Applicant(s)/Patent Under Reexamination
	16/876,579	BRUECK et al.
	Examiner	**Art Unit**
	CHIRAG R PATEL	2454

CPC - Searched*		
Symbol	**Date**	**Examiner**
H04N21/2662, H04N21/8456, H04L65/607,H04L65/608, H04L67/02	06/12/2020	C.P.

CPC Combination Sets - Searched*		
Symbol	**Date**	**Examiner**

US Classification - Searched*			
Class	**Subclass**	**Date**	**Examiner**

* See search history printout included with this form or the SEARCH NOTES box below to determine the scope of the search.

Search Notes		
Search Notes	**Date**	**Examiner**
EAST	06/12/2020	C.P.
EAST	02/01/2021	C.P.
EAST	09/10/2021	C.P.
Google Patents / Scholar	09/10/2021	C.P.
PE2E Search	12/15/2021	C.P.
Google Patents / Scholar	12/15/2021	C.P.
Reviewed the Carmel '473 patent	01/25/2022	C.P.

Search Notes	Application/Control No.	Applicant(s)/Patent Under Reexamination
	16/876,579	BRUECK et al.
	Examiner	**Art Unit**
	CHIRAG R PATEL	2454

Interference Search			
US Class/CPC Symbol	**US Subclass/CPC Group**	**Date**	**Examiner**
H04N	H04N21/2662, H04N21/8456,	05/13/2022	C.P.
H04L	H04L65/607,H04L65/608, H04L67/02	05/13/2022	C.P.

DISH EXHIBIT 2002, Page 1337
Aylo Freesites Ltd. v. Dish Technologies L.L.C.
IPR2024-00047

PE2E SEARCH - Search History (Prior Art)

Ref #	Hits	Search Query	DBs	Default Operator	Plurals	British Equivalents	Time Stamp
L1	1	("10659513").PN.	(US-PGPUB; USPAT; USOCR)	OR	OFF	OFF	2020/06/12 07:55 AM
L2	8	(("9571551") or ("9071668") or ("8612624") or ("8402156") or ("7818444") or ("8868772") or ("10469554") or ("10659513")).PN.	(US-PGPUB; USPAT; USOCR)	OR	OFF	OFF	2020/06/12 07:58 AM
L3	2	(("73369610") or ("20050055425") or ("20030103571")).PN.	(US-PGPUB; USPAT; USOCR)	OR	OFF	OFF	2020/06/12 10:29 AM
L4	3	(("7369610") or ("20050055425") or ("20030103571")).PN.	(US-PGPUB; USPAT; USOCR)	OR	OFF	OFF	2020/06/12 10:30 AM
L5	27	encod$3 near2 streamlets with bitrates	(US-PGPUB; USPAT; USOCR; FPRS; EPO)	OR	ON	ON	2020/06/12 10:36 AM
L6	1	("9751551").PN.	(US-PGPUB; USPAT; USOCR)	OR	OFF	OFF	2020/06/12 10:45 AM
L7	1	("9571551").PN.	(US-PGPUB; USPAT; USOCR)	OR	OFF	OFF	2020/06/12 10:46 AM
L8	1	("8402156").PN.	(US-PGPUB; USPAT; USOCR)	OR	OFF	OFF	2020/06/12 10:53 AM
L9	1	("7818444").PN.	(US-PGPUB; USPAT; USOCR)	OR	OFF	OFF	2020/06/12 10:55 AM
L10	7	(("20080162713") or ("20040170392") or ("20040143672") or ("6486803") or ("20030204519") or ("6486803") or ("20030005455") or ("20040054551") or ("20040170392")).PN.	(US-PGPUB; USPAT; USOCR)	OR	OFF	OFF	2020/06/12 11:02 AM
L11	54	streamlets with bitrates	(US-PGPUB; USPAT; USOCR; FPRS; EPO)	OR	ON	ON	2020/06/12 11:33 AM
L12	74	((H04N21/2662 OR H04N21/8456 OR H04L65/607 OR H04L65/608 OR H04L67/02).CPC.) and streamlet near3 encod$3	(US-PGPUB; USPAT; USOCR; FPRS; EPO)	OR	ON	ON	2020/06/12 12:37 PM
L13	0	((H04N21/2662 OR H04N21/8456 OR H04L65/607 OR H04L65/608 OR H04L67/02).CPC.) and	(US-PGPUB; USPAT; USOCR; FPRS; EPO)	OR	ON	ON	2020/06/12 01:03 PM

		streamlet near3 encod$3 and @rlad<"20040430"					
L14	5	((H04N21/2662 OR H04N21/8456 OR H04L65/607 OR H04L65/608 OR H04L67/02).CPC.) and streamlets and @rlad<"20040430"	(US-PGPUB; USPAT; USOCR; FPRS; EPO)	OR	ON	ON	2020/06/12 01:03 PM
L15	33997	portions with stream and @rlad<"20040430"	(US-PGPUB; USPAT; USOCR; FPRS; EPO)	OR	ON	ON	2020/06/12 01:28 PM
L16	1761238	portions with stream with bitrat$3and @rlad<"20040430"	(US-PGPUB; USPAT; USOCR; FPRS; EPO)	OR	ON	ON	2020/06/12 01:29 PM
L17	24	portions with stream with bitrat$3 and @rlad<"20040430"	(US-PGPUB; USPAT; USOCR; FPRS; EPO)	OR	ON	ON	2020/06/12 01:29 PM
L18	2	((H04N21/2662 OR H04N21/8456 OR H04L65/607 OR H04L65/608 OR H04L67/02).CPC.) and divid$3 with stream same bitrate and @rlad<"20040430"	(US-PGPUB; USPAT; USOCR; FPRS; EPO)	OR	ON	ON	2020/06/12 01:30 PM
L19	3	((H04N21/2662 OR H04N21/8456 OR H04L65/607 OR H04L65/608 OR H04L67/02).CPC.) and (divid$3 split$3)with stream same bitrate and @rlad<"20040430"	(US-PGPUB; USPAT; USOCR; FPRS; EPO)	OR	ON	ON	2020/06/12 01:30 PM
L20	1	("10469554").PN.	(US-PGPUB; USPAT; USOCR)	OR	OFF	OFF	2020/06/12 02:26 PM
L21	1	("10469554").PN.	(US-PGPUB; USPAT; USOCR)	OR	OFF	OFF	2020/06/12 02:44 PM
L22	1	("10469555").PN.	(US-PGPUB; USPAT; USOCR)	OR	OFF	OFF	2020/06/12 02:47 PM
L23	1	("10,469,554").PN.	(US-PGPUB; USPAT; USOCR)	OR	OFF	OFF	2021/02/01 04:44 PM
L24	1	("10,469,555").PN.	(US-PGPUB; USPAT; USOCR)	OR	OFF	OFF	2021/02/01 04:47 PM
L25	211	("20010013128"|"20010047423"|"20020029274"|"20020073167"|"20020091840"|"20020097750"|"20020131496"|"20020144276"|"20020152317"|"20020152318"|"20020156912"|"20020161898"|"20020161908"|"20020161911"|"2002016	(US-PGPUB; USPAT)	OR	ON	ON	2021/02/01 04:51 PM

		9926"|"20020174434"|" 20020176418"|"200201 78330"|"20020188745"| "20030005455"|"20030 014684"|"20030018966 "|"20030021166"|"2003 0021282"|"2003005599 5"|"20030065803"|"200 30067872"|"200300815 82"|"20030093790"|"20 030107994"|"20030135 631"|"20030135863"|"2 0030140159"|"2003015 1753"|"20030152036"|" 20030154239"|"200301 95977"|"20030204519"| "20030204602"|"20030 233464"|"20030236904 "|"20040003101"|"2004 0010613"|"2004003054 7"|"20040030599"|"200 40030797"|"200400310 54"|"20040049780"|"20 040054551"|"20040071 209"|"20040083283"|"2 0040093420"|"2004010 3444"|"20040117427"|" 20040143672"|"200401 68052"|"20040170392"| "20040179032"|"20040 199655"|"20040220926 "|"20040221088"|"2004 0260701"|"2004026795 6"|"20050015509"|"200 50033855"|"200500554 25"|"20050066063"|"20 050076136"|"20050084 166"|"20050108414"|"2 0050120107"|"2005012 3058"|"20050185578"|" 20050188051"|"200502 04046"|"20050251832"| "20050262257"|"20060 010003"|"20060059223 "|"20060075446"|"2006 0080718"|"2006013011 8"|"20060133809"|"200 60165166"|"200601682 90"|"20060206246"|"20 060236219"|"20060277 564"|"20061068295"|"2 0070024705"|"2007003 0833"|"20070067480"|" 20070079325"|"200700 94405"|"20070204310"| "20070280255"|"20080 028428"|"20080037527 "|"20080046939"|"2008					

		0056373"|"2008010464 7"|"20080120330"|"200 80120342"|"200801337 66"|"20080162713"|"20 080184688"|"20080195 744"|"20080205291"|"2 0080219151"|"2008022 2235"|"20080263180"|" 20080281803"|"200900 43906"|"20090055471"| "20090055547"|"20090 210549"|"20100098103 "|"20100262711"|"2011 0307545"|"2015005849 6"|"4535355"|"5168356" |"5267334"|"5404446"|" 5687095"|"5732183"|"5 7685627"|"5841432"|"5 953506"|"6091775"|"60 91777"|"6122660"|"617 2672"|"6185736"|"6195 680"|"6366614"|"63742 89"|"6389473"|"644971 9"|"6486803"|"6490627" |"6510553"|"6574591"|" 6604118"|"6618752"|"6 708213"|"6721723"|"67 31600"|"6757796"|"676 0772"|"6795863"|"6845 107"|"6850965"|"68598 39"|"6874015"|"696838 7"|"6976090"|"7054365" |"7054774"|"7054911"|" 7075986"|"7093001"|"7 096271"|"7099954"|"71 16894"|"7174385"|"719 4549"|"7240100"|"7260 640"|"7274740"|"72955 20"|"7310678"|"732507 3"|"7328243"|"7330908" |"7334044"|"7349358"|" 7349976"|"7369610"|"7 376747"|"7391717"|"74 08984"|"7412531"|"747 7688"|"7523181"|"7536 469"|"7546355"|"75588 69"|"7577750"|"759333 3"|"7599307"|"7609652" |"7653735"|"7707303"|" 7719985"|"7760801"|"7 779135"|"7788395"|"77 97439"|"7817985"|"781 8444"|"7925781"|"8036 265"|"8370514"|"84021 56"|"8521836"|"861262 4"|"8683066"|"8686066" |"8868772"|"8880721"|" 9344496"|"9462074").P				

L26	211	N. ("20010013128"|"20010047423"|"20020029274"|"20020073167"|"20020091840"|"20020097750"|"20020131496"|"20020144276"|"20020152317"|"20020152318"|"20020156912"|"20020161898"|"20020161908"|"20020161911"|"20020169926"|"20020174434"|"20020176418"|"20020178330"|"20020188745"|"20030005455"|"20030014684"|"20030018966"|"20030021166"|"20030021282"|"20030055995"|"20030065803"|"20030067872"|"20030081582"|"20030093790"|"20030107994"|"20030135631"|"20030135863"|"20030140159"|"20030151753"|"20030152036"|"20030154239"|"20030195977"|"20030204519"|"20030204602"|"20030233464"|"20030236904"|"20040003101"|"20040010613"|"20040030547"|"20040030599"|"20040030797"|"20040031054"|"20040049780"|"20040040054551"|"20040071209"|"20040083283"|"20040093420"|"20040103444"|"20040117427"|"20040143672"|"20040168052"|"20040170392"|"20040179032"|"20040199655"|"20040220926"|"20040221088"|"20040260701"|"20040267956"|"20050015509"|"20050033855"|"20050055425"|"20050066063"|"20050076136"|"20050084166"|"20050108414"|"20050120107"|"20050123058"|"20050185578"|"20050188051"|"20050204046"|"20050251832"|"20050262257"|"20060010003"|"20060059223"|"20060075446"|"20060080718"|"20060130118"|"20060133809"|"200	(US-PGPUB; USPAT)	OR	ON	ON	2021/02/01 04:52 PM

DISH EXHIBIT 2002, Page 1342
Aylo Freesites Ltd. v. Dish Technologies L.L.C.
IPR2024-00047

		60165166"|"200601682 90"|"20060206246"|"20 060236219"|"20060277 564"|"20061068295"|"2 0070024705"|"2007003 0833"|"20070067480"|" 20070079325"|"200700 94405"|"20070204310"| "20070280255"|"20080 028428"|"20080037527 "|"20080046939"|"2008 0056373"|"2008010464 7"|"20080120330"|"200 80120342"|"200801337 66"|"20080162713"|"20 080184688"|"20080195 744"|"20080205291"|"2 0080219151"|"2008022 2235"|"20080263180"|" 20080281803"|"200900 43906"|"20090055471"| "20090055547"|"20090 210549"|"20100098103 "|"20100262711"|"2011 0307545"|"2015005849 6"|"4535355"|"5168356" |"5267334"|"5404446"|" 5687095"|"5732183"|"5 7685627"|"5841432"|"5 953506"|"6091775"|"60 91777"|"6122660"|"617 2672"|"6185736"|"6195 680"|"6366614"|"63742 89"|"6389473"|"644971 9"|"6486803"|"6490627" |"6510553"|"6574591"|" 6604118"|"6618752"|"6 708213"|"6721723"|"67 31600"|"6757796"|"676 0772"|"6795863"|"6845 107"|"6850965"|"68598 39"|"6874015"|"696838 7"|"6976090"|"7054365" |"7054774"|"7054911"|" 7075986"|"7093001"|"7 096271"|"7099954"|"71 16894"|"7174385"|"719 4549"|"7240100"|"7260 640"|"7274740"|"72955 20"|"7310678"|"732507 3"|"7328243"|"7330908" |"7334044"|"7349358"|" 7349976"|"7369610"|"7 376747"|"7391717"|"74 08984"|"7412531"|"747 7688"|"7523181"|"7536 469"|"7546355"|"75588 69"|"7577750"|"759333				

		3"|"7599307"|"7609652"|"7653735"|"7707303"|"7719985"|"7760801"|"7779135"|"7788395"|"7797439"|"7817985"|"7818444"|"7925781"|"8036265"|"8370514"|"8402156"|"8521836"|"8612624"|"8683066"|"8686066"|"8868772"|"8880721"|"9344496"|"9462074").PN.					
L27	17	(("5267334") or ("5404446") or ("5841432") or ("5389473") or ("6172672") or ("20020156912") or ("20030055995") or ("20030233464") or ("20020131496") or ("20030135863")).PN.	(US-PGPUB; USPAT; USOCR; FPRS; EPO; JPO)	OR	OFF	OFF	2021/02/01 04:57 PM
L28	211	("20010013128"|"20010047423"|"20020029274"|"20020073167"|"20020091840"|"20020097750"|"20020131496"|"20020144276"|"20020152317"|"20020152318"|"20020156912"|"20020161898"|"20020161908"|"20020161911"|"20020169926"|"20020174434"|"20020176418"|"20020178330"|"20020188745"|"20030005455"|"20030014684"|"20030018966"|"20030021166"|"20030021282"|"20030055995"|"20030065803"|"20030067872"|"20030081582"|"20030093790"|"20030107994"|"20030135631"|"20030135863"|"20030140159"|"20030151753"|"20030152036"|"20030154239"|"20030195977"|"20030204519"|"20030204602"|"20030233464"|"20030236904"|"20040003101"|"20040010613"|"20040030547"|"20040030599"|"20040030797"|"20040031054"|"20040049780"|"20040054551"|"20040071209"|"20040083283"|"2	(US-PGPUB; USPAT)	OR	ON	ON	2021/02/01 04:58 PM

		0040093420"|"2004010 3444"|"20040117427"|" 20040143672"|"200401 68052"|"20040170392"| "20040179032"|"20040 199655"|"20040220926 "|"20040221088"|"2004 0260701"|"2004026795 6"|"20050015509"|"200 50033855"|"200500554 25"|"20050066063"|"20 050076136"|"20050084 166"|"20050108414"|"2 0050120107"|"2005012 3058"|"20050185578"|" 20050188051"|"200502 04046"|"20050251832"| "20050262257"|"20060 010003"|"20060059223 "|"20060075446"|"2006 0080718"|"2006013011 8"|"20060133809"|"200 60165166"|"200601682 90"|"20060206246"|"20 060236219"|"20060277 564"|"20061068295"|"2 0070024705"|"2007003 0833"|"20070067480"|" 20070079325"|"200700 94405"|"20070204310"| "20070280255"|"20080 028428"|"20080037527 "|"20080046939"|"2008 0056373"|"2008010464 7"|"20080120330"|"200 80120342"|"200801337 66"|"20080162713"|"20 080184688"|"20080195 744"|"20080205291"|"2 0080219151"|"2008022 2235"|"20080263180"|" 20080281803"|"200900 43906"|"20090055471"| "20090055547"|"20090 210549"|"20100098103 "|"20100262711"|"2011 0307545"|"2015005849 6"|"4535355"|"5168356" |"5267334"|"5404446"|" 5687095"|"5732183"|"5 7685627"|"5841432"|"5 953506"|"6091775"|"60 91777"|"6122660"|"617 2672"|"6185736"|"6195 680"|"6366614"|"63742 89"|"6389473"|"644971 9"|"6486803"|"6490627" |"6510553"|"6574591"|					

		6604118"|"6618752"|"6708213"|"6721723"|"6731600"|"6757796"|"6760772"|"6795863"|"6845107"|"6850965"|"6859839"|"6874015"|"6968387"|"6976090"|"7054365"|"7054774"|"7054911"|"7075986"|"7093001"|"7096271"|"7099954"|"7116894"|"7174385"|"7194549"|"7240100"|"7260640"|"7274740"|"7295520"|"7310678"|"7325073"|"7328243"|"7330908"|"7334044"|"7349358"|"7349976"|"7369610"|"7376747"|"7391717"|"7408984"|"7412531"|"7477688"|"7523181"|"7536469"|"7546355"|"7558869"|"7577750"|"7593333"|"7599307"|"7609652"|"7653735"|"7707303"|"7719985"|"7760801"|"7779135"|"7788395"|"7797439"|"7817985"|"7818444"|"7925781"|"8036265"|"8370514"|"8402156"|"8521836"|"8612624"|"8683066"|"8686066"|"8868772"|"8880721"|"9344496"|"9462074").PN.					
L29	0	(L25 L26 L27 L28) and streamlet with "same" near2 duration	(US-PGPUB; USPAT)	OR	ON	ON	2021/02/01 05:05 PM
L30	7	(L25 L26 L27 L28) and streamlet with duration	(US-PGPUB; USPAT)	OR	ON	ON	2021/02/01 05:06 PM
L31	46	(("8521836") or ("7558869") or ("7707303") or ("7925781") or ("8880721") or ("9344496") or ("8683066") or ("8686066") or ("6708213") or ("6757796") or ("9462074") or ("20050033855") or ("20030093790") or ("20030195977") or ("20040199655") or ("20040267956") or ("20040220926") or ("20060010003") or	(US-PGPUB; USPAT; USOCR; FPRS; EPO; JPO)	OR	ON	ON	2021/02/01 05:13 PM

		("20060277564") or ("20150058496") or ("20100262711") or ("20050251832") or ("20040221088") or ("20040179032") or ("20020161908") or ("20030021282") or ("20080120330") or ("20080120342") or ("20110307545") or ("20050262257") or ("20030236904")).PN.					
L32	0	(L27 L28 L31) and streamlet with multiple near2 bitrates with duration	(US-PGPUB; USPAT; USOCR; FPRS; EPO; JPO)	OR	ON	ON	2021/02/01 05:14 PM
L33	0	streamlet with multiple near2 bitrates with duration	(US-PGPUB; USPAT; USOCR; FPRS; EPO; JPO)	OR	ON	ON	2021/02/01 05:14 PM
L34	27	streamlet with multiple near2 bitrates	(US-PGPUB; USPAT; USOCR; FPRS; EPO; JPO)	OR	ON	ON	2021/02/01 05:15 PM
L35	27	streamlet with multiple near2 bitrates and duration	(US-PGPUB; USPAT; USOCR; FPRS; EPO; JPO)	OR	ON	ON	2021/02/01 05:15 PM
L36	4	streamlet near3 bit$2rates with duration	(US-PGPUB; USPAT; USOCR; FPRS; EPO; JPO)	OR	ON	ON	2021/09/10 09:45 AM
L37	9	portion near2 stream with duration with bit$2rate	(US-PGPUB; USPAT; USOCR; FPRS; EPO; JPO)	OR	ON	ON	2021/09/10 09:51 AM
L38	0	slic$3 near5 portion near2 stream with duration with bit$2rate	(US-PGPUB; USPAT; USOCR; FPRS; EPO; JPO)	OR	ON	ON	2021/09/10 09:52 AM
L39	6	slicing with stream with bit$2rate	(US-PGPUB; USPAT; USOCR; FPRS; EPO; JPO)	OR	ON	ON	2021/09/10 09:52 AM
L40	2	(("20030135631") or ("20020188745")).PN.	(US-PGPUB; USPAT; USOCR; FPRS; EPO; JPO)	OR	OFF	OFF	2021/09/10 10:09 AM
L41	24	multi-bit near rate near2 encod$3	(US-PGPUB; USPAT; USOCR; FPRS; EPO; JPO)	OR	ON	ON	2021/09/10 10:28 AM
L42	35	("20020002708"|"20020044528"|"20020170062"|"20030009578"|"20030061305"|"20030072376"|"20030236906"|"20040136327"|"20040202109"|"20040260827"|"20050177618"|"20050207569"|"20080022343"|"20080086570"|"5424455	(US-PGPUB; USPAT)	OR	ON	ON	2021/09/10 10:38 AM

		"|"5544318"|"5867230"|"5933603"|"5941951"|"5966015"|"5966025"|"6003030"|"6112239"|"6154744"|"6181867"|"6292383"|"6498897"|"6625643"|"6637031"|"6665726"|"6766407"|"6795863"|"7047307"|"7386627"|"7974200").PN.					
L49	1	("20030204519").PN.	(US-PGPUB; USPAT; USOCR; FPRS; EPO; JPO)	OR	OFF	OFF	2021/09/10 03:01 PM
L50	1	("10469554").PN.	(US-PGPUB; USPAT; USOCR)	OR	OFF	OFF	2021/09/10 04:04 PM
L51	1	("6389473").PN.	(US-PGPUB; USPAT; USOCR)	OR	OFF	OFF	2021/09/10 04:37 PM
L52	114	"1298931"	(US-PGPUB; USPAT; USOCR; FPRS; EPO; JPO)	OR	ON	ON	2021/09/10 04:41 PM
L53	1	("20200280594").PN.	(US-PGPUB; USPAT; USOCR)	OR	OFF	OFF	2021/09/10 05:23 PM
L54	31	("10469554" OR "10469555" OR "10757156" OR "10951680" OR "20020002708" OR "20020044528" OR "20020131496" OR "20030061305" OR "20030067872" OR "20030067875" OR "20030072376" OR "20030152036" OR "20030236906" OR "20040202109" OR "20040260827" OR "20050177618" OR "20080086570" OR "5414455" OR "5867230" OR "5941951" OR "5996025" OR "6292834" OR "6389473" OR "6490627" OR "6498897" OR "6637031" OR "7047307" OR "7386627" OR "8711701" OR "8818127" OR "9407564").pn.	(US-PGPUB; USPAT)	OR	ON	ON	2021/12/15 11:11 AM
L55	0	streamlet SAME bit$2rates AND low SAME medium SAME	(US-PGPUB; USPAT)	OR	ON	ON	2021/12/15 12:16 PM

		high near2 (stream bit$2rate) AND @rlad<"20040430"					
L56	39	streamlet SAME bit$2rates AND low SAME medium SAME high near2 (stream bit$2rate)	(US-PGPUB; USPAT)	OR	ON	ON	2021/12/15 12:16 PM
L57	2	("6389473" "2003204602" "2004010613").pn.	(US-PGPUB; USPAT; USOCR; EPO)	OR	ON	ON	2022/05/13 06:31 PM
L58	231	"6389473"	(US-PGPUB; USPAT; USOCR; EPO)	OR	ON	ON	2022/05/13 06:32 PM
L59	0	"6389473 OR "20030204602" OR 2004010613".PN.	(US-PGPUB; USPAT; USOCR; EPO)	OR	ON	ON	2022/05/13 06:33 PM
L60	3	("6389473" OR "20030204602" OR "2004010613").pn.	(US-PGPUB; USPAT; USOCR; EPO)	OR	ON	ON	2022/05/13 06:33 PM
L61	6	("20020144276" OR "20030061305" OR "20030204602" OR "20040010613" OR "20040202109" OR "6389473").pn.	(US-PGPUB; USPAT)	OR	ON	ON	2022/05/13 07:44 PM

PE2E SEARCH - Search History (Interference)

Ref #	Hits	Search Query	DBs	Default Operator	Plurals	British Equivalents	Time Stamp
N43	84	((H04N21/2662 OR H04N21/8456 OR H04L65/607 OR H04L65/608 OR H04L67/02).CPC.) and streamlet near3 encod$3 and ((multi near bit$2rate)multiple)	(US-PGPUB; USPAT)	OR	ON	ON	2021/09/10 11:31 AM
N44	42	((H04N21/2662 OR H04N21/8456 OR H04L65/607 OR H04L65/608 OR H04L67/02).CPC.) and streamlet near3 encod$3 and ((multi near bit$2rate) (multiple near2 bit$2rate))	(US-PGPUB; USPAT)	OR	ON	ON	2021/09/10 11:32 AM
N45	69	((H04N21/2662 OR H04N21/8456 OR H04L65/607 OR H04L65/608 OR H04L67/02).CPC.) and streamlet near3 duration	(US-PGPUB; USPAT)	OR	ON	ON	2021/09/10 12:08 PM

N46	22	((H04N21/2662 OR H04N21/8456 OR H04L65/607 OR H04L65/608 OR H04L67/02).CPC.) and streamlet near3 duration with bit$2rate	(US-PGPUB; USPAT)	OR	ON	ON	2021/09/10 12:08 PM
N47	0	file with portion near2 stream near3 duration with bit$2rate	(US-PGPUB; USPAT)	OR	ON	ON	2021/09/10 12:14 PM
N48	0	((H04N21/2662 OR H04N21/8456 OR H04L65/607 OR H04L65/608 OR H04L67/02).CPC.) and streamlet near3 encod$3 and ((multi near bit$2rate)multiple) and @rlad<"20040205"	(US-PGPUB; USPAT)	OR	ON	ON	2021/09/10 12:15 PM
N49	39	streamlet SAME bit$2rates AND low SAME medium SAME high near2 (stream bit$2rate)	(US-PGPUB; USPAT)	OR	ON	ON	2021/12/15 12:17 PM
N50	34	((H04N21/2662 OR H04N21/8456 OR H04L65/607 OR H04L65/608 OR H04L67/02).CPC.) AND streamlet near3 encod$3 AND ((multi NEAR bit$2rate) (multiple near2 bit$2rate)) AND low SAME medium SAME high	(US-PGPUB; USPAT)	OR	ON	ON	2021/12/15 12:23 PM
N51	0	((H04N21/2662 OR H04N21/8456 OR H04L65/607 OR H04L65/608 OR H04L67/02).CPC.) AND streamlet near3 encod$3 AND ((multi NEAR bit$2rate)multiple) AND @rlad<"20040430"	(US-PGPUB; USPAT)	OR	ON	ON	2021/12/15 01:52 PM
N52	0	((H04N21/2662 OR H04N21/8456 OR H04L65/607 OR H04L65/608 OR H04L67/02).CPC.) AND streamlet near3 encod$3 AND ((multi NEAR bit$2rate)multiple) AND @rlad<"20040430"	(US-PGPUB; USPAT)	OR	ON	ON	2021/12/15 01:52 PM

N53	0	((H04N21/2662 OR H04N21/8456 OR H04L65/607 OR H04L65/608 OR H04L67/02).CPC.) AND streamlet near3 duration SAME MULTIPLE NEAR3 BIT$2RATES	(US-PGPUB; USPAT)	OR	ON	ON	2022/05/13 07:58 PM
N54	7	((H04N21/2662 OR H04N21/8456 OR H04L65/607 OR H04L65/608 OR H04L67/02).CPC.) AND streamlet near3 duration SAME BIT$2RATES	(US-PGPUB; USPAT)	OR	ON	ON	2022/05/13 07:58 PM
N55	21	((H04N21/2662 OR H04N21/8456 OR H04L65/607 OR H04L65/608 OR H04L67/02).CPC.) AND streamlet near3 duration WITH BIT$2RATE	(US-PGPUB; USPAT)	OR	ON	ON	2022/05/13 07:58 PM

PTO/SB/08a (01-10)
Approved for use through 07/31/2012. OMB 0651-0031
U.S. Patent and Trademark Office; U.S. DEPARTMENT OF COMMERCE
Under the Paperwork Reduction Act of 1995, no persons are required to respond to a collection of information unless it contains a valid OMB control number.

INFORMATION DISCLOSURE STATEMENT BY APPLICANT

(Not for submission under 37 CFR 1.99)

Application Number	16876579
Filing Date	2020-05-18
First Named Inventor	David F. Brueck
Art Unit	2454
Examiner Name	Chirag Patel
Attorney Docket Number	9401-00254

U.S.PATENTS Remove

Examiner Initial*	Cite No	Patent Number	Kind Code[1]	Issue Date	Name of Patentee or Applicant of cited Document	Pages,Columns,Lines where Relevant Passages or Relevant Figures Appear
	1					

If you wish to add additional U.S. Patent citation information please click the Add button. Add

U.S.PATENT APPLICATION PUBLICATIONS Remove

Examiner Initial*	Cite No	Publication Number	Kind Code[1]	Publication Date	Name of Patentee or Applicant of cited Document	Pages,Columns,Lines where Relevant Passages or Relevant Figures Appear
	1					

If you wish to add additional U.S. Published Application citation information please click the Add button. Add

FOREIGN PATENT DOCUMENTS Remove

Examiner Initial*	Cite No	Foreign Document Number[3]	Country Code[2] i	Kind Code[4]	Publication Date	Name of Patentee or Applicant of cited Document	Pages,Columns,Lines where Relevant Passages or Relevant Figures Appear	T[5]
	1							

If you wish to add additional Foreign Patent Document citation information please click the Add button Add

NON-PATENT LITERATURE DOCUMENTS Remove

Examiner Initials*	Cite No	Include name of the author (in CAPITAL LETTERS), title of the article (when appropriate), title of the item (book, magazine, journal, serial, symposium, catalog, etc), date, pages(s), volume-issue number(s), publisher, city and/or country where published.	T[5]

ALL REFERENCES CONSIDERED EXCEPT WHERE LINED THROUGH. /C.R.P/

INFORMATION DISCLOSURE STATEMENT BY APPLICANT (Not for submission under 37 CFR 1.99)		
	Application Number	16876579
	Filing Date	2020-05-18
	First Named Inventor	David F. Brueck
	Art Unit	2454
	Examiner Name	Chirag Patel
	Attorney Docket Number	9401-00254

	1	Respondents' Post-Hearing Brief (Redacted) dated March 29, 2022 (321 pages).	
	2	Complainants' Post-Hearing Reply Brief (Redacted) dated April 7, 2022 (105 pages).	
	3	Commission Investigative Staff's Post-Hearing Reply Brief (Redacted) dated April 13, 2022 (42 pages).	
	4	Commission Investigative Staff's Post-Hearing Brief (Redacted) dated April 1, 2022 (311 pages).	
	5	Respondents' Reply Post-Hearing Brief (Redacted) dated April 7, 2022 (106 pages).	
	6	Complainants' Post-Hearing Brief (Redacted) dated March 29, 2022 (326 pages).	

If you wish to add additional non-patent literature document citation information please click the Add button Add

EXAMINER SIGNATURE

Examiner Signature	/CHIRAG R PATEL/	Date Considered	05/13/2022

*EXAMINER: Initial if reference considered, whether or not citation is in conformance with MPEP 609. Draw line through a citation if not in conformance and not considered. Include copy of this form with next communication to applicant.

[1] See Kind Codes of USPTO Patent Documents at www.USPTO.GOV or MPEP 901.04. [2] Enter office that issued the document, by the two-letter code (WIPO Standard ST.3). [3] For Japanese patent documents, the indication of the year of the reign of the Emperor must precede the serial number of the patent document. [4] Kind of document by the appropriate symbols as indicated on the document under WIPO Standard ST.16 if possible. [5] Applicant is to place a check mark here if English language translation is attached.

ALL REFERENCES CONSIDERED EXCEPT WHERE LINED THROUGH. /C.R.P/

INFORMATION DISCLOSURE STATEMENT BY APPLICANT (Not for submission under 37 CFR 1.99)	Application Number	16876579
	Filing Date	2020-05-18
	First Named Inventor	David F. Brueck
	Art Unit	2454
	Examiner Name	Chirag Patel
	Attorney Docket Number	9401-00254

CERTIFICATION STATEMENT

Please see 37 CFR 1.97 and 1.98 to make the appropriate selection(s):

That each item of information contained in the information disclosure statement was first cited in any communication from a foreign patent office in a counterpart foreign application not more than three months prior to the filing of the information disclosure statement. See 37 CFR 1.97(e)(1).

OR

☒ That no item of information contained in the information disclosure statement was cited in a communication from a foreign patent office in a counterpart foreign application, and, to the knowledge of the person signing the certification after making reasonable inquiry, no item of information contained in the information disclosure statement was known to any individual designated in 37 CFR 1.56(c) more than three months prior to the filing of the information disclosure statement. See 37 CFR 1.97(e)(2).

☒ See attached certification statement.

The fee set forth in 37 CFR 1.17 (p) has been submitted herewith.

A certification statement is not submitted herewith.

SIGNATURE

A signature of the applicant or representative is required in accordance with CFR 1.33, 10.18. Please see CFR 1.4(d) for the form of the signature.

Signature	/Brett A. Carlson/	Date (YYYY-MM-DD)	2022-04-20
Name/Print	Brett A. Carlson	Registration Number	39928

This collection of information is required by 37 CFR 1.97 and 1.98. The information is required to obtain or retain a benefit by the public which is to file (and by the USPTO to process) an application. Confidentiality is governed by 35 U.S.C. 122 and 37 CFR 1.14. This collection is estimated to take 1 hour to complete, including gathering, preparing and submitting the completed application form to the USPTO. Time will vary depending upon the individual case. Any comments on the amount of time you require to complete this form and/or suggestions for reducing this burden, should be sent to the Chief Information Officer, U.S. Patent and Trademark Office, U.S. Department of Commerce, P.O. Box 1450, Alexandria, VA 22313-1450. DO NOT SEND FEES OR COMPLETED FORMS TO THIS ADDRESS. **SEND TO: Commissioner for Patents, P.O. Box 1450, Alexandria, VA 22313-1450.**

ALL REFERENCES CONSIDERED EXCEPT WHERE LINED THROUGH. /C.R.P/

Privacy Act Statement

The Privacy Act of 1974 (P.L. 93-579) requires that you be given certain information in connection with your submission of the attached form related to a patent application or patent. Accordingly, pursuant to the requirements of the Act, please be advised that: (1) the general authority for the collection of this information is 35 U.S.C. 2(b)(2); (2) furnishing of the information solicited is voluntary; and (3) the principal purpose for which the information is used by the U.S. Patent and Trademark Office is to process and/or examine your submission related to a patent application or patent. If you do not furnish the requested information, the U.S. Patent and Trademark Office may not be able to process and/or examine your submission, which may result in termination of proceedings or abandonment of the application or expiration of the patent.

The information provided by you in this form will be subject to the following routine uses:

1. The information on this form will be treated confidentially to the extent allowed under the Freedom of Information Act (5 U.S.C. 552) and the Privacy Act (5 U.S.C. 552a). Records from this system of records may be disclosed to the Department of Justice to determine whether the Freedom of Information Act requires disclosure of these record s.

2. A record from this system of records may be disclosed, as a routine use, in the course of presenting evidence to a court, magistrate, or administrative tribunal, including disclosures to opposing counsel in the course of settlement negotiations.

3. A record in this system of records may be disclosed, as a routine use, to a Member of Congress submitting a request involving an individual, to whom the record pertains, when the individual has requested assistance from the Member with respect to the subject matter of the record.

4. A record in this system of records may be disclosed, as a routine use, to a contractor of the Agency having need for the information in order to perform a contract. Recipients of information shall be required to comply with the requirements of the Privacy Act of 1974, as amended, pursuant to 5 U.S.C. 552a(m).

5. A record related to an International Application filed under the Patent Cooperation Treaty in this system of records may be disclosed, as a routine use, to the International Bureau of the World Intellectual Property Organization, pursuant to the Patent Cooperation Treaty.

6. A record in this system of records may be disclosed, as a routine use, to another federal agency for purposes of National Security review (35 U.S.C. 181) and for review pursuant to the Atomic Energy Act (42 U.S.C. 218(c)).

7. A record from this system of records may be disclosed, as a routine use, to the Administrator, General Services, or his/her designee, during an inspection of records conducted by GSA as part of that agency's responsibility to recommend improvements in records management practices and programs, under authority of 44 U.S.C. 2904 and 2906. Such disclosure shall be made in accordance with the GSA regulations governing inspection of records for this purpose, and any other relevant (i.e., GSA or Commerce) directive. Such disclosure shall not be used to make determinations about individuals.

8. A record from this system of records may be disclosed, as a routine use, to the public after either publication of the application pursuant to 35 U.S.C. 122(b) or issuance of a patent pursuant to 35 U.S.C. 151. Further, a record may be disclosed, subject to the limitations of 37 CFR 1.14, as a routine use, to the public if the record was filed in an application which became abandoned or in which the proceedings were terminated and which application is referenced by either a published application, an application open to public inspections or an issued patent.

9. A record from this system of records may be disclosed, as a routine use, to a Federal, State, or local law enforcement agency, if the USPTO becomes aware of a violation or potential violation of law or regulation.

Bibliographic Data

Application No: 16/876,579

Foreign Priority claimed: ○ Yes ◉ No

35 USC 119 (a-d) conditions met: ☐ Yes ☑ No ☐ Met After Allowance

Verified and Acknowledged: /CHIRAG R PATEL/ [ ]

Examiner's Signature | Initials

Title: APPARATUS, SYSTEM, AND METHOD FOR MULTI-BITRATE CONTENT STREAMING

FILING or 371(c) DATE	CLASS	GROUP ART UNIT	ATTORNEY DOCKET NO.
05/18/2020	709	2454	9401-00254
RULE			

APPLICANTS

DISH Technologies L.L.C., Englewood, CO, UNITED STATES

INVENTORS

DAVID F. BRUECK, SARATOGA SPRINGS, UT, UNITED STATES

MARK B. HURST, CEDAR HILLS, UT, UNITED STATES

R. DREW MAJOR, OREM, UT, UNITED STATES

CONTINUING DATA

This application is a CON of 16004056 06/08/2018 PAT 10659513

16004056 is a CON of 15414025 01/24/2017 PAT 9998516

15414025 is a CON of 14719122 05/21/2015 PAT 9571551

14719122 is a CON of 14106051 12/13/2013 PAT 9071668

14106051 is a CON of 13617114 09/14/2012 PAT 8612624

13617114 is a CON of 12906940 10/18/2010 PAT 8402156

12906940 is a CON of 11673483 02/09/2007 PAT 7818444

11673483 is a CIP of 11116783 04/28/2005 PAT 8868772

11116783 has PRO of 60566831 04/30/2004

FOREIGN APPLICATIONS

IF REQUIRED, FOREIGN LICENSE GRANTED**

05/26/2020

STATE OR COUNTRY

UNITED STATES

ADDRESS

KW LAW LLP (Dish Technologies L.L.C.)

6122 N 7th St Suite D
Phoenix, AZ 85014
UNITED STATES

FILING FEE RECEIVED

$7,320

PTO/SB/08a (01-10)
Approved for use through 07/31/2012. OMB 0651-0031
U.S. Patent and Trademark Office; U.S. DEPARTMENT OF COMMERCE
Under the Paperwork Reduction Act of 1995, no persons are required to respond to a collection of information unless it contains a valid OMB control number.

INFORMATION DISCLOSURE STATEMENT BY APPLICANT

(Not for submission under 37 CFR 1.99)

Application Number	16876579
Filing Date	2020-05-18
First Named Inventor	David F. Brueck
Art Unit	2454
Examiner Name	Patel, Chirag R
Attorney Docket Number	9401-00254

U.S.PATENTS Remove

Examiner Initial*	Cite No	Patent Number	Kind Code[1]	Issue Date	Name of Patentee or Applicant of cited Document	Pages,Columns,Lines where Relevant Passages or Relevant Figures Appear
	1	6389473	B1	2002-05-14	Carmel et al.	

If you wish to add additional U.S. Patent citation information please click the Add button. Add

U.S.PATENT APPLICATION PUBLICATIONS Remove

Examiner Initial*	Cite No	Publication Number	Kind Code[1]	Publication Date	Name of Patentee or Applicant of cited Document	Pages,Columns,Lines where Relevant Passages or Relevant Figures Appear
	1	20030061305	A1	2003-03-27	Copley et al.	
	2	20040202109	A1	2004-10-14	Akiyama et al.	
	3	20030204602	A1	2003-10-30	Hudson et al.	
	4	20040010613	A1	2004-01-15	Apostolopoulos et al.	
	5	20020144276	A1	2020-10-03	Radford et al.	

If you wish to add additional U.S. Published Application citation information please click the Add button. Add

FOREIGN PATENT DOCUMENTS Remove

ALL REFERENCES CONSIDERED EXCEPT WHERE LINED THROUGH. /CRP/

DISH EXHIBIT 2002, Page 1358
Aylo Freesites Ltd. v. Dish Technologies L.L.C.
IPR2024-00047

INFORMATION DISCLOSURE STATEMENT BY APPLICANT (Not for submission under 37 CFR 1.99)		
	Application Number	16876579
	Filing Date	2020-05-18
	First Named Inventor	David F. Brueck
	Art Unit	2454
	Examiner Name	Patel, Chirag R
	Attorney Docket Number	9401-00254

Examiner Initial*	Cite No	Foreign Document Number[3]	Country Code[2] i	Kind Code[4]	Publication Date	Name of Patentee or Applicant of cited Document	Pages,Columns,Lines where Relevant Passages or Relevant Figures Appear	T[5]
	1	2367219	GB	A	2002-03-27	Vintage Global		
	2	1395014	EP	A1	2004-03-03	Matsushita Electric Ind Co Ltd.		
	3	1298931	EP	A2	2003-04-02	Oplayo		

If you wish to add additional Foreign Patent Document citation information please click the Add button Add

NON-PATENT LITERATURE DOCUMENTS Remove

Examiner Initials*	Cite No	Include name of the author (in CAPITAL LETTERS), title of the article (when appropriate), title of the item (book, magazine, journal, serial, symposium, catalog, etc), date, pages(s), volume-issue number(s), publisher, city and/or country where published.	T[5]
	1	Appendix H, Appendix H to Expert Report of Dr. Iain Richardson on Invalidity: Public Use (40 pages).	
	2	The Wayback Machine, dated November 8, 2021 (1 page).	
	3	In the Matter of: Certain Fitness Devices, Videotaped Deposition of BYU Broadcasting, Mark Mitchell, dated December 2, 2021 (123 pages).	
	4	The Wayback Machine, bates labeled RESP-PA06323, dated December 7, 2021 (1 page).	
	5	The Wayback Machine, bates labeled RESP-PA06257, dated November 8, 2021 (1 page).	

ALL REFERENCES CONSIDERED EXCEPT WHERE LINED THROUGH. /C.R.P/

INFORMATION DISCLOSURE STATEMENT BY APPLICANT (Not for submission under 37 CFR 1.99)		
	Application Number	16876579
	Filing Date	2020-05-18
	First Named Inventor	David F. Brueck
	Art Unit	2454
	Examiner Name	Patel, Chirag R
	Attorney Docket Number	9401-00254

	6	The Wayback Machine, bates labeled RESP-PA06256, dated November 8, 2021 (1 page).	
	7	Move Media, bates labeled RESP-PA06253, dated November 8, 2021 (1 page).	
	8	The Wayback Machine, bates labeled RESP-PA06252, dated November 8, 2021 (1 page).	
	9	BYU Television, bates labeled RESP-PA06247 to RESP-PA06248, dated November 8, 2021 (2 pages).	
	10	Mitchell Exhibit 13, BYU-TV Live, FAQ, bates labeled RESP-PA06275to RESP-PA06276, dated December 2, 2021 (2 pages).	
	11	Mitchell Exhibit 12, BYU Television, The Wayback Machine, bates labeled RESP-PA06268- to RESP-PA06269, dated December 2, 2021 (2 pages).	
	12	Mitchell Exhibit 11, BYU Television, The Wayback Machine, bates labeled RESP-PA06272 to RESP-PA06274, dated December 2, 2021 (3 pages).	
	13	Mitchell Exhibit 10, BYU Television, The Wayback Machine, bates labeled RESP-PA06266 to RESP-PA06267, dated December 2 2021 (2 pages).	
	14	Mitchell Exhibit 7, BYU Television, The Wayback Machine, bates labeled RESP-PA06270 to RESP-PA06271, dated December 2, 2021 (2 pages).	
	15	Mitchell Exhibit 6, bates labeled BYU000012-BYU000013, dated December 2, 2021 (2 pages).	
	16	Mitchell Exhibit 5, BYU Television, The Wayback Machine, bates labeled RESP-PA06263 to RESP-PA06264, dated December 2, 2021 (2 pages).	

ALL REFERENCES CONSIDERED EXCEPT WHERE LINED THROUGH. /C.R.P/

INFORMATION DISCLOSURE STATEMENT BY APPLICANT (Not for submission under 37 CFR 1.99)		
	Application Number	16876579
	Filing Date	2020-05-18
	First Named Inventor	David F. Brueck
	Art Unit	2454
	Examiner Name	Patel, Chirag R
	Attorney Docket Number	9401-00254

	17	Mitchell Exhibit 4, BYU Television, The Wayback Machine, bates labeled RESP-PA06261 to RESP-PA06262, dated December 2, 2021 (2 pages).	
	18	Mitchell Exhibit 3, BYU Television, The Wayback Machine, bates labeled BYU000001, dated December 2, 2021 (1 page).	
	19	Mitchell Exhibit 2, Conference Summary for the 175th Semiannual General Conference, dated December 2, 2021 (3 pages).	
	20	Major Exhibit 62, Official Report of the One Hundred Seventy-fifth Semiannual General Conference of The Church of Jesus Christ of Latter-day Saints, dated November 5, 2021 (128 pages).	
	21	In the Matter of: In Re Certain Fitness Devices, Videotaped Deposition of Peloton Interactive, Inc., Drew Major, dated December 17, 2021 (72 pages).	
	22	In the Matter of: In Re Certain Fitness Devices and Systems Containing Same, Videotaped Deposition of John Edwards, dated November 12, 2021 (191 pages).	
	23	In the Matter of: In Re Certain Fitness Devices and Systems Containing Same, Videotaped Deposition of Robert Drew Major, dated November 5, 2021 (268 pages).	
	24	Uncertified Rough Draft Transcript, Deposition of Mark Hurst, Vol. 2, dated December 3, 2021 (51 pages).	
	25	Hurst Exhibit 68, Move Media, dated November 19, 2021 (1 page).	
	26	Bates labeled RESP-PA06326 to RESP-PA06337, dated December 7, 2021 (12 pages).	
	27	Bates labeled RESP-PA06255 (1 page).	

ALL REFERENCES CONSIDERED EXCEPT WHERE LINES THROUGH. /C.R.P./

INFORMATION DISCLOSURE STATEMENT BY APPLICANT (Not for submission under 37 CFR 1.99)	Application Number	16876579
	Filing Date	2020-05-18
	First Named Inventor	David F. Brueck
	Art Unit	2454
	Examiner Name	Patel, Chirag R
	Attorney Docket Number	9401-00254

	28	Bates labeled RESP-PA06254 (1 page).	
	29	International Search Report for EP application 20216568.4 dated April 19, 2021 (15 pages).	
	30	Response to International Search Report filed with EP application 20216568.4 on November 19, 2021 (41 pages).	

If you wish to add additional non-patent literature document citation information please click the Add button Add

EXAMINER SIGNATURE

Examiner Signature	/CHIRAG R PATEL/	Date Considered	05/13/2022

*EXAMINER: Initial if reference considered, whether or not citation is in conformance with MPEP 609. Draw line through a citation if not in conformance and not considered. Include copy of this form with next communication to applicant.

[1] See Kind Codes of USPTO Patent Documents at www.USPTO.GOV or MPEP 901.04. [2] Enter office that issued the document, by the two-letter code (WIPO Standard ST.3). [3] For Japanese patent documents, the indication of the year of the reign of the Emperor must precede the serial number of the patent document. [4] Kind of document by the appropriate symbols as indicated on the document under WIPO Standard ST.16 if possible. [5] Applicant is to place a check mark here if English language translation is attached.

ALL REFERENCES CONSIDERED EXCEPT WHERE LINED THROUGH. /C.R.P/

INFORMATION DISCLOSURE STATEMENT BY APPLICANT (Not for submission under 37 CFR 1.99)	Application Number	16876579
	Filing Date	2020-05-18
	First Named Inventor	David F. Brueck
	Art Unit	2454
	Examiner Name	Patel, Chirag R
	Attorney Docket Number	9401-00254

CERTIFICATION STATEMENT

Please see 37 CFR 1.97 and 1.98 to make the appropriate selection(s):

That each item of information contained in the information disclosure statement was first cited in any communication from a foreign patent office in a counterpart foreign application not more than three months prior to the filing of the information disclosure statement. See 37 CFR 1.97(e)(1).

OR

☐ That no item of information contained in the information disclosure statement was cited in a communication from a foreign patent office in a counterpart foreign application, and, to the knowledge of the person signing the certification after making reasonable inquiry, no item of information contained in the information disclosure statement was known to any individual designated in 37 CFR 1.56(c) more than three months prior to the filing of the information disclosure statement. See 37 CFR 1.97(e)(2).

☒ See attached certification statement.

☒ The fee set forth in 37 CFR 1.17 (p) has been submitted herewith.

A certification statement is not submitted herewith.

SIGNATURE

A signature of the applicant or representative is required in accordance with CFR 1.33, 10.18. Please see CFR 1.4(d) for the form of the signature.

Signature	/Brett A. Carlson/	Date (YYYY-MM-DD)	2022-04-05
Name/Print	Brett A. Carlson	Registration Number	39928

This collection of information is required by 37 CFR 1.97 and 1.98. The information is required to obtain or retain a benefit by the public which is to file (and by the USPTO to process) an application. Confidentiality is governed by 35 U.S.C. 122 and 37 CFR 1.14. This collection is estimated to take 1 hour to complete, including gathering, preparing and submitting the completed application form to the USPTO. Time will vary depending upon the individual case. Any comments on the amount of time you require to complete this form and/or suggestions for reducing this burden, should be sent to the Chief Information Officer, U.S. Patent and Trademark Office, U.S. Department of Commerce, P.O. Box 1450, Alexandria, VA 22313-1450. DO NOT SEND FEES OR COMPLETED FORMS TO THIS ADDRESS. **SEND TO: Commissioner for Patents, P.O. Box 1450, Alexandria, VA 22313-1450.**

ALL REFERENCES CONSIDERED EXCEPT WHERE LINED THROUGH. /C.B.P/

Privacy Act Statement

The Privacy Act of 1974 (P.L. 93-579) requires that you be given certain information in connection with your submission of the attached form related to a patent application or patent. Accordingly, pursuant to the requirements of the Act, please be advised that: (1) the general authority for the collection of this information is 35 U.S.C. 2(b)(2); (2) furnishing of the information solicited is voluntary; and (3) the principal purpose for which the information is used by the U.S. Patent and Trademark Office is to process and/or examine your submission related to a patent application or patent. If you do not furnish the requested information, the U.S. Patent and Trademark Office may not be able to process and/or examine your submission, which may result in termination of proceedings or abandonment of the application or expiration of the patent.

The information provided by you in this form will be subject to the following routine uses:

1. The information on this form will be treated confidentially to the extent allowed under the Freedom of Information Act (5 U.S.C. 552) and the Privacy Act (5 U.S.C. 552a). Records from this system of records may be disclosed to the Department of Justice to determine whether the Freedom of Information Act requires disclosure of these record s.

2. A record from this system of records may be disclosed, as a routine use, in the course of presenting evidence to a court, magistrate, or administrative tribunal, including disclosures to opposing counsel in the course of settlement negotiations.

3. A record in this system of records may be disclosed, as a routine use, to a Member of Congress submitting a request involving an individual, to whom the record pertains, when the individual has requested assistance from the Member with respect to the subject matter of the record.

4. A record in this system of records may be disclosed, as a routine use, to a contractor of the Agency having need for the information in order to perform a contract. Recipients of information shall be required to comply with the requirements of the Privacy Act of 1974, as amended, pursuant to 5 U.S.C. 552a(m).

5. A record related to an International Application filed under the Patent Cooperation Treaty in this system of records may be disclosed, as a routine use, to the International Bureau of the World Intellectual Property Organization, pursuant to the Patent Cooperation Treaty.

6. A record in this system of records may be disclosed, as a routine use, to another federal agency for purposes of National Security review (35 U.S.C. 181) and for review pursuant to the Atomic Energy Act (42 U.S.C. 218(c)).

7. A record from this system of records may be disclosed, as a routine use, to the Administrator, General Services, or his/her designee, during an inspection of records conducted by GSA as part of that agency's responsibility to recommend improvements in records management practices and programs, under authority of 44 U.S.C. 2904 and 2906. Such disclosure shall be made in accordance with the GSA regulations governing inspection of records for this purpose, and any other relevant (i.e., GSA or Commerce) directive. Such disclosure shall not be used to make determinations about individuals.

8. A record from this system of records may be disclosed, as a routine use, to the public after either publication of the application pursuant to 35 U.S.C. 122(b) or issuance of a patent pursuant to 35 U.S.C. 151. Further, a record may be disclosed, subject to the limitations of 37 CFR 1.14, as a routine use, to the public if the record was filed in an application which became abandoned or in which the proceedings were terminated and which application is referenced by either a published application, an application open to public inspections or an issued patent.

9. A record from this system of records may be disclosed, as a routine use, to a Federal, State, or local law enforcement agency, if the USPTO becomes aware of a violation or potential violation of law or regulation.

ALL REFERENCES CONSIDERED EXCEPT WHERE LINED THROUGH. /C.R.P/

DISH EXHIBIT 2002, Page 1364
Aylo Freesites Ltd. v. Dish Technologies L.L.C.
IPR2024-00047

Doc Code: MFEE.C.AD
Document Description: Maintenance Fee Address Change

PTO/SB/47 (11-21)
Approved for use through 11/30/2024. OMB 0651-0016
U.S. Patent and Trademark Office; U.S. Department of Commerce
Under the Paperwork Reduction Act of 1995, no persons are required to respond to a collection of information unless it displays a valid OMB control number.

"FEE ADDRESS" INDICATION FORM

Address to:
Mail Stop Maintenance Fee
Director of the United States
Patent and Trademark Office
P.O. Box 1450
Alexandria, VA 22313-1450

-OR-

Fax to: 571-273-6500

INSTRUCTIONS: The issue fee must have been paid for application(s) listed on this form. In addition, only an address represented by a Customer Number can be established as the fee address for maintenance fee purposes (hereafter, fee address). A fee address should be established when correspondence related to maintenance fees should be mailed to a different address than the correspondence address for the application.
When to check the first box below: If you have a Customer Number to represent the fee address.
When to check the second box below: If you have no Customer Number representing the desired fee address, in which case a completed Request for Customer Number (PTO/SB/125) must be attached to this form. For more information on Customer Numbers, see section 403 of the Manual of Patent Examining Procedure (MPEP).

For the following listed application(s), please recognize as the "Fee Address" under the provisions of 37 CFR 1.363 the address associated with:

☑ Customer Number 000197

OR

☐ The attached Request for Customer Number (PTO/SB/125) form.

PATENT NUMBER (if known)	APPLICATION NUMBER
	16/876,579

Completed by (check one):

☐ Applicant/Inventor

☑ Attorney or agent of record 67,812 (Reg. No.)

☐ Assignee of record of the entire interest. See 37 CFR 3.71. Statement under 37 CFR 3.73(b) (Form PTO/SB/96) is enclosed or was filed on _____ (Date)

/Brett A. Carlson/
Signature

Brett A. Carlson
Typed or printed name

480-241-8219
Requester's telephone number

August 17, 2022
Date

NOTE: Signatures of all the inventors or assignees of record of the entire interest or their representative(s) are required. If the assignee is a juristic entity, this form must be signed by a patent practitioner (attorney or agent) of record. Submit multiple forms if more than one signature is required (see below*).

☐ *Total of _____ PTO/SB/47 forms are submitted

A Federal agency may not conduct or sponsor, and a person is not required to respond to, nor shall a person be subject to a penalty for failure to comply with an information collection subject to the requirements of the Paperwork Reduction Act of 1995, unless the information collection has a currently valid OMB Control Number. The OMB Control Number for this information collection is 0651-0016. Public burden for this form is estimated to average 5 minutes per response, including the time for reviewing instructions, searching existing data sources, gathering and maintaining the data needed, and completing and reviewing the information collection. Send comments regarding this burden estimate or any other aspect of this information collection, including suggestions for reducing this burden to the Chief Administrative Officer, United States Patent and Trademark Office, P.O. Box 1450, Alexandria, VA 22313-1450 or email InformationCollection@uspto.gov. DO NOT SEND FEES OR COMPLETED FORMS TO THIS ADDRESS. SEND TO: Commissioner for Patents, P.O. Box 1450, Alexandria, VA 22313-1450.

If you need assistance in completing this form, please call 1-800-PTO-9199 and then select option 2.

Privacy Act Statement

The Privacy Act of 1974 (P.L. 93-579) requires that you be given certain information in connection with your submission of the attached form related to a patent application or patent. The United States Patent and Trademark Office (USPTO) collects this information under authority of 5 CFR 1.290. The information in this system of records is used to manage all records of applicant including name, citizenship, residence, post office address and other information with respect to inventors and their legal representatives pertaining to the applicant's activities in connection with the invention for which a patent is sought. This information is protected from disclosure to third parties in accordance with the Privacy Act.

However, routine uses of this information may include disclosure to the following: to law enforcement and investigation in the event that the system of records indicates a violation or potential violation of law; to a Federal, state, local, or international agency, in response to its request; to an agency, organization, or individual for the purpose of performing audit or oversight operations as authorized by law; to non-federal personnel under contract to the agency; to a court for adjudication and litigation; to the Department of Justice for Freedom of Information Act (FOIA) assistance; to members of congress working on behalf of an individual; to the Office of Personnel Management (OPM) for personnel research purposes; to National Archives and Records Administration for inspection of records; and to the Office of Management and Budget (OMB)for legislative coordination and clearance. Failure to provide any part of the requested information may result in an inability to process requests for access and information. The applicable Privacy Act System of Records Notice for this information is COMMERCE/PAT-TM-7 Patent Application Files, available at Federal Register / Vol. 78, No. 61 / Friday, March 29, 2013 /Notices 19243. https://www.govinfo.gov/content/pkg/FR-2013-03-29pdf/2013-07341.pdf

Electronic Patent Application Fee Transmittal

Application Number:	16876579
Filing Date:	18-May-2020
Title of Invention:	APPARATUS, SYSTEM, AND METHOD FOR MULTI-BITRATE CONTENT STREAMING
First Named Inventor/Applicant Name:	DAVID F. BRUECK
Filer:	Brett Carlson/Blake Scheffey
Attorney Docket Number:	9401-00254

Filed as Large Entity

Filing Fees for Utility under 35 USC 111(a)

Description	Fee Code	Quantity	Amount	Sub-Total in USD($)
Basic Filing:				
Pages:				
Claims:				
Miscellaneous-Filing:				
Petition:				
Patent-Appeals-and-Interference:				
Post-Allowance-and-Post-Issuance:				
UTILITY APPL ISSUE FEE	1501	1	1200	1200

Description	Fee Code	Quantity	Amount	Sub-Total in USD($)
Extension-of-Time:				
Miscellaneous:				
			Total in USD ($)	**1200**

Electronic Acknowledgement Receipt

EFS ID:	46429817
Application Number:	16876579
International Application Number:	
Confirmation Number:	3720
Title of Invention:	APPARATUS, SYSTEM, AND METHOD FOR MULTI-BITRATE CONTENT STREAMING
First Named Inventor/Applicant Name:	DAVID F. BRUECK
Customer Number:	70560
Filer:	Brett Carlson/Blake Scheffey
Filer Authorized By:	Brett Carlson
Attorney Docket Number:	9401-00254
Receipt Date:	17-AUG-2022
Filing Date:	18-MAY-2020
Time Stamp:	13:43:32
Application Type:	Utility under 35 USC 111(a)

Payment information:

Submitted with Payment	yes
Payment Type	CARD
Payment was successfully received in RAM	$1200
RAM confirmation Number	E20228GD44213440
Deposit Account	
Authorized User	

The Director of the USPTO is hereby authorized to charge indicated fees and credit any overpayment as follows:

File Listing:

Document Number	Document Description	File Name	File Size(Bytes)/ Message Digest	Multi Part /.zip	Pages (if appl.)
1	Issue Fee Payment (PTO-85B)	9401-00254_IFT.pdf	303775 3cbf4deced5da871212c1e1592cc1a211b0b90b2	no	1
Warnings:					
Information:					
2	Maintenance Fee Address Change	9401-00254_FeeAddress.pdf	246557 295cb1758814ce22fd4704852890865cfc186357	no	2
Warnings:					
Information:					
3	Fee Worksheet (SB06)	fee-info.pdf	37990 09999a17d99be05c46baacd877b1f21fdd55dacf	no	2
Warnings:					
Information:					
			Total Files Size (in bytes):	588322	

This Acknowledgement Receipt evidences receipt on the noted date by the USPTO of the indicated documents, characterized by the applicant, and including page counts, where applicable. It serves as evidence of receipt similar to a Post Card, as described in MPEP 503.

New Applications Under 35 U.S.C. 111
If a new application is being filed and the application includes the necessary components for a filing date (see 37 CFR 1.53(b)-(d) and MPEP 506), a Filing Receipt (37 CFR 1.54) will be issued in due course and the date shown on this Acknowledgement Receipt will establish the filing date of the application.
National Stage of an International Application under 35 U.S.C. 371
If a timely submission to enter the national stage of an international application is compliant with the conditions of 35 U.S.C. 371 and other applicable requirements a Form PCT/DO/EO/903 indicating acceptance of the application as a national stage submission under 35 U.S.C. 371 will be issued in addition to the Filing Receipt, in due course.
New International Application Filed with the USPTO as a Receiving Office
If a new international application is being filed and the international application includes the necessary components for an international filing date (see PCT Article 11 and MPEP 1810), a Notification of the International Application Number and of the International Filing Date (Form PCT/RO/105) will be issued in due course, subject to prescriptions concerning national security, and the date shown on this Acknowledgement Receipt will establish the international filing date of the application.

PART B - FEE(S) TRANSMITTAL

Complete and send this form, together with applicable fee(s), by mail or fax, or via EFS-Web.

By mail, send to: Mail Stop ISSUE FEE
Commissioner for Patents
P.O. Box 1450
Alexandria, Virginia 22313-1450

By fax, send to: (571)-273-2885

INSTRUCTIONS: This form should be used for transmitting the ISSUE FEE and PUBLICATION FEE (if required). Blocks 1 through 5 should be completed where appropriate. All further correspondence including the Patent, advance orders and notification of maintenance fees will be mailed to the current correspondence address as indicated unless corrected below or directed otherwise in Block 1, by (a) specifying a new correspondence address; and/or (b) indicating a separate "FEE ADDRESS" for maintenance fee notifications.

CURRENT CORRESPONDENCE ADDRESS (Note: Use Block 1 for any change of address)

70560 7590 05/20/2022
KW LAW LLP (Dish Technologies L.L.C.)
6122 N 7th St Suite D
Phoenix, AZ 85014

Note: A certificate of mailing can only be used for domestic mailings of the Fee(s) Transmittal. This certificate cannot be used for any other accompanying papers. Each additional paper, such as an assignment or formal drawing, must have its own certificate of mailing or transmission.

Certificate of Mailing or Transmission

I hereby certify that this Fee(s) Transmittal is being deposited with the United States Postal Service with sufficient postage for first class mail in an envelope addressed to the Mail Stop ISSUE FEE address above, or being transmitted to the USPTO via EFS-Web or by facsimile to (571) 273-2885, on the date below.

(Typed or printed name)
(Signature)
(Date)

APPLICATION NO.	FILING DATE	FIRST NAMED INVENTOR	ATTORNEY DOCKET NO.	CONFIRMATION NO.
16/876,579	05/18/2020	DAVID F. BRUECK	9401-00254	3720

TITLE OF INVENTION: APPARATUS, SYSTEM, AND METHOD FOR MULTI-BITRATE CONTENT STREAMING

APPLN. TYPE	ENTITY STATUS	ISSUE FEE DUE	PUBLICATION FEE DUE	PREV. PAID ISSUE FEE	TOTAL FEE(S) DUE	DATE DUE
nonprovisional	UNDISCOUNTED	$1200	$0.00	$0.00	$1200	08/22/2022

EXAMINER	ART UNIT	CLASS-SUBCLASS
PATEL, CHIRAG R	2454	709-219000

1. Change of correspondence address or indication of "Fee Address" (37 CFR 1.363).

☐ Change of correspondence address (or Change of Correspondence Address form PTO/AIA/122 or PTO/SB/122) attached.

☐ "Fee Address" indication (or "Fee Address" Indication form PTO/AIA/47 or PTO/SB/47; Rev 03-02 or more recent) attached. **Use of a Customer Number is required.**

2. For printing on the patent front page, list
(1) The names of up to 3 registered patent attorneys or agents OR, alternatively,
(2) The name of a single firm (having as a member a registered attorney or agent) and the names of up to 2 registered patent attorneys or agents. If no name is listed, no name will be printed.

1 KW Law, LLP
2
3

3. ASSIGNEE NAME AND RESIDENCE DATA TO BE PRINTED ON THE PATENT (print or type)

PLEASE NOTE: Unless an assignee is identified below, no assignee data will appear on the patent. If an assignee is identified below, the document must have been previously recorded, or filed for recordation, as set forth in 37 CFR 3.11 and 37 CFR 3.81(a). Completion of this form is NOT a substitute for filing an assignment.

(A) NAME OF ASSIGNEE: DISH Technologies L.L.C.

(B) RESIDENCE: (CITY and STATE OR COUNTRY): Englewood, CO

Please check the appropriate assignee category or categories (will not be printed on the patent) : ☐ Individual ☒ Corporation or other private group entity ☐ Government

4a. Fees submitted: ☒ Issue Fee ☐ Publication Fee (if required) ☐ Advance Order - # of Copies _____

4b. Method of Payment: *(Please first reapply any previously paid fee shown above)*

☒ Electronic Payment via EFS-Web ☐ Enclosed check ☐ Non-electronic payment by credit card (Attach form PTO-2038)

☒ The Director is hereby authorized to charge the [redacted]s), any deficiency, or credit any overpayment to Deposit Account No. 602406

5. **Change in Entity Status** (from status indicated above)

☐ Applicant certifying micro entity status. See 37 CFR 1.29

☐ Applicant asserting small entity status. See 37 CFR 1.27

☐ Applicant changing to regular undiscounted fee status.

NOTE: Absent a valid certification of Micro Entity Status (see forms PTO/SB/15A and 15B), issue fee payment in the micro entity amount will not be accepted at the risk of application abandonment.
NOTE: If the application was previously under micro entity status, checking this box will be taken to be a notification of loss of entitlement to micro entity status.
NOTE: Checking this box will be taken to be a notification of loss of entitlement to small or micro entity status, as applicable.

NOTE: This form must be signed in accordance with 37 CFR 1.31 and 1.33. See 37 CFR 1.4 for signature requirements and certifications.

Authorized Signature /Brett A. Carlson/ Date August 17, 2022

Typed or printed name Brett A. Carlson Registration No. 39,928

INFORMATION DISCLOSURE STATEMENT BY APPLICANT (Not for submission under 37 CFR 1.99)		
	Application Number	16876579
	Filing Date	2020-05-18
	First Named Inventor	David F. Brueck
	Art Unit	2454
	Examiner Name	Patel, Chirag R.
	Attorney Docket Number	066.0141X1C9

ALL REFERENCES CONSIDERED EXCEPT WHERE LINED THROUGH. /C.R.P/

	47	20070094405	A1	2007-04-26	Zhang	
Change(s) applied to document, /J.T./ 1/7/2022	48	20080184688	A1	~~2008-08-17~~ 08/2008	~~Ganguly et al.~~ Daly et al.	
	49	20080263180	A1	2008-10-23	Hurst et al.	
	50	20080133766	A1	2008-06-05	Luo	
	51	20070079325	A1	2007-04-05	de Heer	
	52	20070067480	A1	2007-03-22	Beek et al.	
	53	20070030833	A1	2007-02-08	Pirzada et al.	
	54	20090055547	A1	2009-02-26	Hudson et al.	
	55	20090210549	A1	2009-08-20	Hudson et al.	
	56	20100098103	A1	2010-04-22	Xiong et al.	
	57	20090043906	A1	2009-02-12	Hurst et al.	

ALL REFERENCES CONSIDERED EXCEPT WHERE LINED THROUGH. /C.R.P/

UNITED STATES PATENT AND TRADEMARK OFFICE

UNITED STATES DEPARTMENT OF COMMERCE
United States Patent and Trademark Office
Address: COMMISSIONER FOR PATENTS
P.O. Box 1450
Alexandria, Virginia 22313-1450
www.uspto.gov

APPLICATION NO.	FILING DATE	FIRST NAMED INVENTOR	ATTORNEY DOCKET NO.	CONFIRMATION NO.
16/876,579	05/18/2020	DAVID F. BRUECK	9401-00254	3720

70560 7590 09/14/2022
KW LAW LLP (Dish Technologies L.L.C.)
6122 N 7th St Suite D
Phoenix, AZ 85014

EXAMINER
PATEL, CHIRAG R

ART UNIT	PAPER NUMBER
2454	

NOTIFICATION DATE	DELIVERY MODE
09/14/2022	ELECTRONIC

Please find below and/or attached an Office communication concerning this application or proceeding.

The time period for reply, if any, is set in the attached communication.

Notice of the Office communication was sent electronically on above-indicated "Notification Date" to the following e-mail address(es):

dish@kwlaw.co
ipdept@dish.com
uspto@docketttrak.com

Corrected *Notice of Allowability*	**Application No.** 16/876,579	**Applicant(s)** BRUECK et al.	
	Examiner CHIRAG R PATEL	**Art Unit** 2454	**AIA (FITF) Status** No

-- The MAILING DATE of this communication appears on the cover sheet with the correspondence address--

All claims being allowable, PROSECUTION ON THE MERITS IS (OR REMAINS) CLOSED in this application. If not included herewith (or previously mailed), a Notice of Allowance (PTOL-85) or other appropriate communication will be mailed in due course. **THIS NOTICE OF ALLOWABILITY IS NOT A GRANT OF PATENT RIGHTS.** This application is subject to withdrawal from issue at the initiative of the Office or upon petition by the applicant. See 37 CFR 1.313 and MPEP 1308.

1. ☑ This communication is responsive to the printer rush on September 6, 2022.
   ☐ A declaration(s)/affidavit(s) under **37 CFR 1.130(b)** was/were filed on _____.

2. ☐ An election was made by the applicant in response to a restriction requirement set forth during the interview on _____; the restriction requirement and election have been incorporated into this action.

3. ☑ The allowed claim(s) is/are 1-30 . As a result of the allowed claim(s), you may be eligible to benefit from the **Patent Prosecution Highway** program at a participating intellectual property office for the corresponding application. For more information, please see **http://www.uspto.gov/patents/init_events/pph/index.jsp** or send an inquiry to **PPHfeedback@uspto.gov.**

4. ☐ Acknowledgment is made of a claim for foreign priority under 35 U.S.C. § 119(a)-(d) or (f).

   Certified copies:

   a) ☐ All b) ☐ Some* c) ☐ None of the:

   1. ☐ Certified copies of the priority documents have been received.
   2. ☐ Certified copies of the priority documents have been received in Application No. _____ .
   3. ☐ Copies of the certified copies of the priority documents have been received in this national stage application from the International Bureau (PCT Rule 17.2(a)).

   * Certified copies not received: _____ .

Applicant has THREE MONTHS FROM THE "MAILING DATE" of this communication to file a reply complying with the requirements noted below. Failure to timely comply will result in ABANDONMENT of this application.
THIS THREE-MONTH PERIOD IS NOT EXTENDABLE.

5. ☐ CORRECTED DRAWINGS (as "replacement sheets") must be submitted.
   ☐ including changes required by the attached Examiner's Amendment / Comment or in the Office action of Paper No./Mail Date _____ .

   Identifying indicia such as the application number (see 37 CFR 1.84(c)) should be written on the drawings in the front (not the back) of each sheet. Replacement sheet(s) should be labeled as such in the header according to 37 CFR 1.121(d).

6. ☐ DEPOSIT OF and/or INFORMATION about the deposit of BIOLOGICAL MATERIAL must be submitted. Note the attached Examiner's comment regarding REQUIREMENT FOR THE DEPOSIT OF BIOLOGICAL MATERIAL.

Attachment(s)

1. ☐ Notice of References Cited (PTO-892)
2. ☑ Information Disclosure Statements (PTO/SB/08), Paper No./Mail Date 11/17/20.
3. ☐ Examiner's Comment Regarding Requirement for Deposit of Biological Material _____.
4. ☐ Interview Summary (PTO-413), Paper No./Mail Date. _____.
5. ☐ Examiner's Amendment/Comment
6. ☐ Examiner's Statement of Reasons for Allowance
7. ☐ Other _____.

/CHIRAG R PATEL/
Primary Examiner, Art Unit 2454

DISH EXHIBIT 2002, Page 1374
Aylo Freesites Ltd. v. Dish Technologies L.L.C.
IPR2024-00047

Search Notes	Application/Control No.	Applicant(s)/Patent Under Reexamination
	16/876,579	BRUECK et al.
	Examiner	**Art Unit**
	CHIRAG R PATEL	2454

CPC - Searched*		
Symbol	**Date**	**Examiner**
H04N21/2662, H04N21/8456, H04L65/607,H04L65/608, H04L67/02	06/12/2020	C.P.

CPC Combination Sets - Searched*		
Symbol	**Date**	**Examiner**

US Classification - Searched*			
Class	**Subclass**	**Date**	**Examiner**

* See search history printout included with this form or the SEARCH NOTES box below to determine the scope of the search.

Search Notes		
Search Notes	**Date**	**Examiner**
EAST	06/12/2020	C.P.
EAST	02/01/2021	C.P.
EAST	09/10/2021	C.P.
Google Patents / Scholar	09/10/2021	C.P.
PE2E Search	12/15/2021	C.P.
Google Patents / Scholar	12/15/2021	C.P.
Reviewed the Carmel '473 patent	01/25/2022	C.P.

Search Notes	Application/Control No.	Applicant(s)/Patent Under Reexamination
	16/876,579	BRUECK et al.
	Examiner	**Art Unit**
	CHIRAG R PATEL	2454

Interference Search			
US Class/CPC Symbol	**US Subclass/CPC Group**	**Date**	**Examiner**
H04N	H04N21/2662, H04N21/8456,	05/13/2022	C.P.
H04L	H04L65/607,H04L65/608, H04L67/02	05/13/2022	C.P.

DISH EXHIBIT 2002, Page 1376
Aylo Freesites Ltd. v. Dish Technologies L.L.C.
IPR2024-00047

Issue Classification	Application/Control No.	Applicant(s)/Patent Under Reexamination
	16/876,579	BRUECK et al.
	Examiner	**Art Unit**
	CHIRAG R PATEL	2454

CPC

Symbol					Type	Version
H04L	/	65	/	70	F	2022-05-01
H04L	/	47	/	801	I	2013-01-01
H04L	/	47	/	12	I	2013-01-01
G06F	/	16	/	71	I	2019-01-01
G06F	/	16	/	183	I	2019-01-01
H04N	/	7	/	24	I	2013-01-01
H04N	/	21	/	23439	I	2013-01-01
H04N	/	21	/	4331	I	2013-01-01
H04N	/	21	/	84	I	2013-01-01
H04N	/	21	/	8456	I	2013-01-01
H04L	/	65	/	80	I	2013-01-01
H04L	/	65	/	61	I	2022-05-01
H04L	/	65	/	65	I	2022-05-01
H04L	/	65	/	1101	I	2022-05-01
H04L	/	67	/	60	I	2022-05-01
H04L	/	67	/	568	I	2022-05-01
H04L	/	67	/	02	I	2013-01-01
H04L	/	65	/	1069	I	2013-01-01
H04N	/	21	/	2662	I	2013-01-01

CPC Combination Sets

Symbol					Type	Set	Ranking	Version
	/		/					

NONE (Assistant Examiner)	(Date)	**Total Claims Allowed:** 30	
/CHIRAG R PATEL/ Primary Examiner, Art Unit 2454 (Primary Examiner)	12 September 2022 (Date)	O.G. Print Claim(s) 1	O.G. Print Figure 4

U.S. Patent and Trademark Office

Part of Paper No.: 20220912

Issue Classification	Application/Control No.	Applicant(s)/Patent Under Reexamination
	16/876,579	BRUECK et al.
	Examiner	**Art Unit**
	CHIRAG R PATEL	2454

INTERNATIONAL CLASSIFICATION					
CLAIMED					
H04L	/	29	/	06	

NON-CLAIMED					
	/		/		

US ORIGINAL CLASSIFICATION	
CLASS	**SUBCLASS**

CROSS REFERENCES(S)						
CLASS	**SUBCLASS (ONE SUBCLASS PER BLOCK)**					

NONE (Assistant Examiner) (Date)		**Total Claims Allowed:** 30	
/CHIRAG R PATEL/ Primary Examiner, Art Unit 2454 (Primary Examiner) (Date)	12 September 2022	O.G. Print Claim(s) 1	O.G. Print Figure 4

Issue Classification	Application/Control No.	Applicant(s)/Patent Under Reexamination
	16/876,579	BRUECK et al.
	Examiner	**Art Unit**
	CHIRAG R PATEL	2454

☑ Claims renumbered in the same order as presented by applicant ☐ CPA ☑ T.D. ☐ R.1.47

CLAIMS

Final	Original	Final	Original	Final	Original	Final	Original	Final	Original	Final	Original	Final	Original	Final	Original
	1		10		19		28								
	2		11		20		29								
	3		12		21		30								
	4		13		22										
	5		14		23										
	6		15		24										
	7		16		25										
	8		17		26										
	9		18		27										

NONE (Assistant Examiner)	(Date)	**Total Claims Allowed:** 30	
/CHIRAG R PATEL/ Primary Examiner, Art Unit 2454 (Primary Examiner)	12 September 2022 (Date)	O.G. Print Claim(s) 1	O.G. Print Figure 4

U.S. Patent and Trademark Office

Part of Paper No.: 20220912

Index of Claims	Application/Control No.	Applicant(s)/Patent Under Reexamination
	16/876,579	BRUECK et al.
	Examiner	**Art Unit**
	CHIRAG R PATEL	2454

✓	Rejected	-	Cancelled	N	Non-Elected	A	Appeal
=	Allowed	÷	Restricted	I	Interference	O	Objected

CLAIMS

☑ Claims renumbered in the same order as presented by applicant ☐ CPA ☑ T.D. ☐ R.1.47

CLAIM		DATE								
Final	Original	06/12/2020	09/10/2021	12/15/2021	01/25/2022	03/04/2022	05/13/2022	09/12/2022		
	1	✓	=	=	=	=	=	=		
	2	✓	=	=	=	=	=	=		
	3	✓	=	=	=	=	=	=		
	4	✓	=	=	=	=	=	=		
	5	✓	=	=	=	=	=	=		
	6	✓	=	=	=	=	=	=		
	7	✓	=	=	=	=	=	=		
	8	✓	=	=	=	=	=	=		
	9	✓	=	=	=	=	=	=		
	10	✓	=	=	=	=	=	=		
	11	✓	=	=	=	=	=	=		
	12	✓	=	=	=	=	=	=		
	13	✓	=	=	=	=	=	=		
	14	✓	=	=	=	=	=	=		
	15	✓	=	=	=	=	=	=		
	16	✓	=	=	=	=	=	=		
	17	✓	=	=	=	=	=	=		
	18	✓	=	=	=	=	=	=		
	19	✓	=	=	=	=	=	=		
	20	✓	=	=	=	=	=	=		
	21	✓	=	=	=	=	=	=		
	22	✓	=	=	=	=	=	=		
	23	✓	=	=	=	=	=	=		
	24	✓	=	=	=	=	=	=		
	25	✓	=	=	=	=	=	=		
	26	✓	=	=	=	=	=	=		
	27	✓	=	=	=	=	=	=		
	28	✓	=	=	=	=	=	=		
	29	✓	=	=	=	=	=	=		
	30	✓	=	=	=	=	=	=		

Bibliographic Data

Application No: 16/876,579

Foreign Priority claimed: ○ Yes ◉ No

35 USC 119 (a-d) conditions met: ☐ Yes ☑ No ☐ Met After Allowance

Verified and Acknowledged: /CHIRAG R PATEL/ [ ]

Examiner's Signature | Initials

Title: APPARATUS, SYSTEM, AND METHOD FOR MULTI-BITRATE CONTENT STREAMING

FILING or 371(c) DATE	CLASS	GROUP ART UNIT	ATTORNEY DOCKET NO.
05/18/2020	709	2454	9401-00254
RULE			

APPLICANTS

DISH Technologies L.L.C., Englewood, CO, UNITED STATES

INVENTORS

DAVID F. BRUECK, SARATOGA SPRINGS, UT, UNITED STATES

MARK B. HURST, CEDAR HILLS, UT, UNITED STATES

R. DREW MAJOR, OREM, UT, UNITED STATES

CONTINUING DATA

This application is a CON of 16004056 06/08/2018 PAT 10659513

16004056 is a CON of 15414025 01/24/2017 PAT 9998516

15414025 is a CON of 14719122 05/21/2015 PAT 9571551

14719122 is a CON of 14106051 12/13/2013 PAT 9071668

14106051 is a CON of 13617114 09/14/2012 PAT 8612624

13617114 is a CON of 12906940 10/18/2010 PAT 8402156

12906940 is a CON of 11673483 02/09/2007 PAT 7818444

11673483 is a CIP of 11116783 04/28/2005 PAT 8868772

11116783 has PRO of 60566831 04/30/2004

FOREIGN APPLICATIONS

IF REQUIRED, FOREIGN LICENSE GRANTED**

05/26/2020

STATE OR COUNTRY

UNITED STATES

ADDRESS

KW LAW LLP (Dish Technologies L.L.C.)

6122 N 7th St Suite D
Phoenix, AZ 85014
UNITED STATES

FILING FEE RECEIVED

$7,320

PTO/SB/08a (01-10)
Approved for use through 07/31/2012. OMB 0651-0031
U.S. Patent and Trademark Office; U.S. DEPARTMENT OF COMMERCE
Under the Paperwork Reduction Act of 1995, no persons are required to respond to a collection of information unless it contains a valid OMB control number.

INFORMATION DISCLOSURE STATEMENT BY APPLICANT

(Not for submission under 37 CFR 1.99)

Application Number	16876579
Filing Date	2020-05-18
First Named Inventor	David F. Brueck
Art Unit	2454
Examiner Name	Patel, Chirag R.
Attorney Docket Number	066.0141X1C9

U.S.PATENTS Remove

Examiner Initial*	Cite No	Patent Number	Kind Code[1]	Issue Date	Name of Patentee or Applicant of cited Document	Pages,Columns,Lines where Relevant Passages or Relevant Figures Appear
	1	7577750	B2	2009-08-18	Shen et al.	
	2	6195680	B1	2001-02-27	Goldszmidt et al.	
	3	6449719	B1	2002-09-10	Baker	
	4	7369610	B2	2008-05-06	Xu et al.	
	5	7408984	B2	2008-08-05	Lu et al.	
	6	7523181	B2	2009-04-21	Swildens et al.	
	7	6976090	B2	2005-12-13	Ben-Shaul et al.	
	8	7240100	B1	2007-07-03	Wein et al.	

ALL REFERENCES CONSIDERED EXCEPT WHERE LINED THROUGH. /C.R.P/

INFORMATION DISCLOSURE STATEMENT BY APPLICANT (Not for submission under 37 CFR 1.99)		
	Application Number	16876579
	Filing Date	2020-05-18
	First Named Inventor	David F. Brueck
	Art Unit	2454
	Examiner Name	Patel, Chirag R.
	Attorney Docket Number	066.0141X1C9

	9	6850965	B2	2005-02-01	Allen	
	10	7334044	B1	2008-02-19	Allen	
	11	7760801	B2	2010-07-20	Ghanbari et al.	
	12	7099954	B2	2006-08-29	Li et al.	
	13	6760772	B2	2004-07-06	Zou et al.	
	14	7054911	B1	2006-05-30	Lango et al.	
	15	7797439	B2	2010-09-14	Cherkasova et al.	
	16	7477688	B1	2009-01-13	Zhang et al.	
	17	7054774	B2	2006-05-30	Batterberry et al.	
	18	5168356		1992-12-01	Acampora et al.	
	19	7818444	B2	2010-10-19	Brueck et al.	

INFORMATION DISCLOSURE STATEMENT BY APPLICANT (Not for submission under 37 CFR 1.99)		
	Application Number	16876579
	Filing Date	2020-05-18
	First Named Inventor	David F. Brueck
	Art Unit	2454
	Examiner Name	Patel, Chirag R.
	Attorney Docket Number	066.0141X1C9

	20	7599307	B2	2009-10-06	Seckni et al.	
	21	7093001	B2	2006-08-15	Yang et al.	
	22	6874015	B2	2005-03-29	Kaminsky et al.	
	23	6845107	B1	2005-01-18	Kitazawa et al.	
	24	6185736	B1	2001-02-06	Ueno	
	25	5768527 ~~5768527~~		1998-06-16	Zhu et al.	
	26	7274740	B2	2007-09-25	van Beek et al.	
	27	7546355	B2	2009-06-09	Kalnitsky	
	28	7174385	B2	2007-02-06	Li	
	29	7376747	B2	2008-05-20	Hartop	
	30	7719985	B2	2010-05-18	Lee et al.	

ALL REFERENCES CONSIDERED EXCEPT WHERE LINED THROUGH. /C.R.P./

INFORMATION DISCLOSURE STATEMENT BY APPLICANT (Not for submission under 37 CFR 1.99)		
	Application Number	16876579
	Filing Date	2020-05-18
	First Named Inventor	David F. Brueck
	Art Unit	2454
	Examiner Name	Patel, Chirag R.
	Attorney Docket Number	066.0141X1C9

	31	7349358	B2	2008-03-25	Hennessey et al.	
	32	7194549	B1	2007-03-20	Lee et al.	
	33	6374289	B2	2002-04-16	Delaney et al.	
	34	7325073	B2	2008-01-29	Shao et al.	
	35	7609652	B2	2009-10-27	Kellerer et al.	
	36	6795863	B1	2004-09-21	Doty, Jr.	
	37	7817985	B2	2010-10-19	Moon	
	38	7788395	B2	2010-08-31	Bowra et al.	
	39	7536469	B2	2009-05-19	Chou et al.	
	40	7412531	B2	2008-08-12	Lango et al.	
	41	7295520	B2	2007-11-13	Lee et al.	

ALL REFERENCES CONSIDERED EXCEPT WHERE LINED THROUGH. /C.R.P/

INFORMATION DISCLOSURE STATEMENT BY APPLICANT (Not for submission under 37 CFR 1.99)		
	Application Number	16876579
	Filing Date	2020-05-18
	First Named Inventor	David F. Brueck
	Art Unit	2454
	Examiner Name	Patel, Chirag R.
	Attorney Docket Number	066.0141X1C9

	42	7054365	B2	2006-05-30	Kim et al.	
	43	6122660		2000-09-19	Baransky et al.	
	44	7391717	B2	2008-06-24	Kiemets et al.	
	45	7260640	B1	2007-08-21	Kramer et al.	
	46	7310678	B2	2007-12-18	Gunaseelan et al.	
	47	6618752	B1	2003-09-09	Moore et al.	
	48	6721723	B1	2004-04-13	Gibson et al.	
	49	6859839	B1	2005-02-22	Zahorjan et al.	
	50	7779135	B2	2010-08-17	Hudson et al.	
	51	7593333	B2	2009-09-22	Li et al.	
	52	5953506		1999-09-14	Kalra et al.	

ALL REFERENCES CONSIDERED EXCEPT WHERE LINED THROUGH. /C.R.P/

INFORMATION DISCLOSURE STATEMENT BY APPLICANT (Not for submission under 37 CFR 1.99)		
	Application Number	16876579
	Filing Date	2020-05-18
	First Named Inventor	David F. Brueck
	Art Unit	2454
	Examiner Name	Patel, Chirag R.
	Attorney Docket Number	066.0141X1C9

	53	6091775		2000-07-18	Hibi et al.	
	54	6091777		2000-07-18	Guetz et al.	
	55	6195680		2001-02-27	Goldszmidt et al.	
	56	6366614		2002-04-02	Pian et al.	
	57	6389473		2002-05-14	Carmel et al.	
	58	6486803	B1	2002-11-26	Luby et al.	
	59	6490627		2002-12-03	Kalra et al.	
	60	6510553		2003-01-21	Hazra	
	61	6574591		2003-06-03	Kleiman et al.	
	62	6604118		2003-08-05	Klleiman et al.	
	63	6731600		2004-05-04	Patel et al.	

ALL REFERENCES CONSIDERED EXCEPT WHERE LINED THROUGH. /C.R.P/

INFORMATION DISCLOSURE STATEMENT BY APPLICANT (Not for submission under 37 CFR 1.99)		
	Application Number	16876579
	Filing Date	2020-05-18
	First Named Inventor	David F. Brueck
	Art Unit	2454
	Examiner Name	Patel, Chirag R.
	Attorney Docket Number	066.0141X1C9

	64	5732183		2004-05-04	Graham	
	65	6968387		2005-11-22	Lanphear	
	66	7075986		2006-07-11	Girod et al.	
	67	7096271		2006-08-22	Omoigui et al.	
	68	7349976		2008-03-25	Glaser et al.	
	69	7408984	B2	2008-08-05	Lu et al.	
	70	4535355		1985-08-13	Arn et al.	
	71	8036265	B1	2011-10-11	Reynolds et al.	
	72	5687095		1997-11-11	Haskell et al.	
	73	7116894	B1	2006-10-03	Chatterton	
	74	7328243	B2	2008-02-05	Yaeger et al.	

ALL REFERENCES CONSIDERED EXCEPT WHERE LINED THROUGH. /C.R.P/

INFORMATION DISCLOSURE STATEMENT BY APPLICANT (Not for submission under 37 CFR 1.99)		
	Application Number	16876579
	Filing Date	2020-05-18
	First Named Inventor	David F. Brueck
	Art Unit	2454
	Examiner Name	Patel, Chirag R.
	Attorney Docket Number	066.0141X1C9

	75	7330908	B2	2008-02-12	Jungek	
	76	7653735	B2	2010-01-26	Mandato et al.	
	77	8612624	B2	2013-12-17	Brueck et al.	
	78	8868772	B2	2014-10-21	Major et al.	
	79	8402156	B2	2013-03-19	Brueck et al.	
	80	8370514	B2	2013-02-05	Hurst et al.	
	81	8880721	B2	2014-11-04	Hurst et al.	

If you wish to add additional U.S. Patent citation information please click the Add button. Add

U.S.PATENT APPLICATION PUBLICATIONS Remove

Examiner Initial*	Cite No	Publication Number	Kind Code[1]	Publication Date	Name of Patentee or Applicant of cited Document	Pages,Columns,Lines where Relevant Passages or Relevant Figures Appear
	1	20020161898	A1	2002-10-31	Hartop et al.	
	2	20050055425		2005-03-00	Lango et al.	

INFORMATION DISCLOSURE STATEMENT BY APPLICANT (Not for submission under 37 CFR 1.99)		
	Application Number	16876579
	Filing Date	2020-05-18
	First Named Inventor	David F. Brueck
	Art Unit	2454
	Examiner Name	Patel, Chirag R.
	Attorney Docket Number	066.0141X1C9

	3	20050015509		2005-01-00	Sitaraman	
	4	20020131496		2002-09-00	Vasudevan et al.	
	5	20040083283	A1	2004-04-29	Sundaram et al.	
	6	20080219151	A1	2008-09-11	Ma et al.	
	7	20020152318	A1	2002-10-17	Menon et al.	
	8	20060080718	A1	2006-04-13	Gray et al.	
	9	20050120107	A1	2005-06-02	Kagan et al.	
	10	20040103444	A1	2004-05-27	Weinberg et al.	
	11	20050188051	A1	2005-08-25	Sneh	
	12	20030154239	A1	2003-08-14	Davis et al.	
	13	20040030547	A1	2004-02-12	Leaning et al.	

INFORMATION DISCLOSURE STATEMENT BY APPLICANT (Not for submission under 37 CFR 1.99)		
	Application Number	16876579
	Filing Date	2020-05-18
	First Named Inventor	David F. Brueck
	Art Unit	2454
	Examiner Name	Patel, Chirag R.
	Attorney Docket Number	066.0141X1C9

	14	20040117427	A1	2004-06-17	Allen et al.	
	15	20030014684	A1	2003-01-16	Kashyap	
	16	20060206246	A1	2006-09-14	Walker	
	17	20050076136	A1	2005-04-07	Cho et al.	
	18	20030018966	A1	2003-01-23	Cook et al.	
	19	20040030599	A1	2004-02-12	Sie et al.	
	20	20050262257	A1	2005-11-24	Major et al.	
	21	20050033855	A1	2005-02-10	Moradi et al.	
	22	20010047423	A1	2001-11-29	Shao et al.	
	23	20030140159	A1	2003-07-24	Campbell et al.	
	24	20020176418	A1	2002-11-28	Hunt et al.	

ALL REFERENCES CONSIDERED EXCEPT WHERE LINED THROUGH. /C.R.P./

INFORMATION DISCLOSURE STATEMENT BY APPLICANT (Not for submission under 37 CFR 1.99)		
	Application Number	16876579
	Filing Date	2020-05-18
	First Named Inventor	David F. Brueck
	Art Unit	2454
	Examiner Name	Patel, Chirag R.
	Attorney Docket Number	066.0141X1C9

	25	20020169926	A1	2002-11-14	Pinckney, III, et al.	
	26	20020178330	A1	2002-11-28	Schlowsky-Fischer et al.	
	27	20050084166	A1	2005-04-21	Bonch et al.	
	28	20020091840	A1	2002-07-11	Pulier et al.	
	29	20080281803	A1	2008-11-13	Gentric	
	30	20060168295 ~~20061068295~~	A1	2006-07-27	Batterberry et al.	
	31	20060165166	A1	2006-07-27	Chou et al.	
	32	20020097750	A1	2002-07-25	Gunaseelan et al.	
	33	20020152317	A1	2002-10-17	Wang et al.	
	34	20030021166	A1	2003-01-30	Soloff	
	35	20040168052	A1	2004-08-26	Clisham et al.	

ALL REFERENCES CONSIDERED EXCEPT WHERE LINED THROUGH. /C.R.P./

INFORMATION DISCLOSURE STATEMENT BY APPLICANT (Not for submission under 37 CFR 1.99)		
	Application Number	16876579
	Filing Date	2020-05-18
	First Named Inventor	David F. Brueck
	Art Unit	2454
	Examiner Name	Patel, Chirag R.
	Attorney Docket Number	066.0141X1C9

	36	20050066063	A1	2005-03-24	Grigorovitch et al.	
	37	20050204046	A1	2005-09-15	Watanabe	
	38	20060059223	A1	2006-03-16	Klemets et al.	
	39	20060168290	A1	2006-07-27	Doron	
	40	20040260701	A1	2004-12-23	Lehikoinen et al.	
	41	20090055471	A1	2009-02-26	Kozat et al.	
	42	20080222235	A1	2008-09-11	Hurst et al.	
	43	20050185578	A1	2005-08-25	Padmanabham et al.	
	44	20070280255	A1	2007-12-06	Tsang et al.	
	45	20080037527	A1	2008-02-14	Chan et al.	
	46	20080205291	A1	2008-08-28	Li et al.	

INFORMATION DISCLOSURE STATEMENT BY APPLICANT (Not for submission under 37 CFR 1.99)		
	Application Number	16876579
	Filing Date	2020-05-18
	First Named Inventor	David F. Brueck
	Art Unit	2454
	Examiner Name	Patel, Chirag R.
	Attorney Docket Number	066.0141X1C9

	47	20070094405	A1	2007-04-26	Zhang	
	48	20080184688	A1	2006-08-17	Ganguly et al.	
	49	20080263180	A1	2008-10-23	Hurst et al.	
	50	20080133766	A1	2008-06-05	Luo	
	51	20070079325	A1	2007-04-05	de Heer	
	52	20070067480	A1	2007-03-22	Beek et al.	
	53	20070030833	A1	2007-02-08	Pirzada et al.	
	54	20090055547	A1	2009-02-26	Hudson et al.	
	55	20090210549	A1	2009-08-20	Hudson et al.	
	56	20100098103	A1	2010-04-22	Xiong et al.	
	57	20090043906	A1	2009-02-12	Hurst et al.	

INFORMATION DISCLOSURE STATEMENT BY APPLICANT (Not for submission under 37 CFR 1.99)		
	Application Number	16876579
	Filing Date	2020-05-18
	First Named Inventor	David F. Brueck
	Art Unit	2454
	Examiner Name	Patel, Chirag R.
	Attorney Docket Number	066.0141X1C9

	58	20020161911	A1	2002-10-31	Pinckney, III et al.	
	59	20060236219	A1	2006-10-19	Grigorovitch et al.	
	60	20080046939	A1	2008-02-21	Lu et al.	
	61	20060130118	A1	2006-06-15	Damm	
	62	20070204310	A1	2007-08-30	Hua et al.	
	63	20030065803	A1	2003-04-03	Heuvelman	
	64	20040049780	A1	2004-03-11	Gee	
	65	20060133809	A1	2006-06-22	Chow et al.	
	66	20020144276	A1	2002-10-03	Radford et al.	
	67	20020073167	A1	2002-06-13	Powell et al.	
	68	20020174434	A1	2002-11-21	Lee et al.	

ALL REFERENCES CONSIDERED EXCEPT WHERE LINED THROUGH. /C.R.P./

INFORMATION DISCLOSURE STATEMENT BY APPLICANT (Not for submission under 37 CFR 1.99)		
	Application Number	16876579
	Filing Date	2020-05-18
	First Named Inventor	David F. Brueck
	Art Unit	2454
	Examiner Name	Patel, Chirag R.
	Attorney Docket Number	066.0141X1C9

	69	20020188745		2002-12-12	Hughes et al.	
	70	20030005455	A1	2003-01-02	Bowers	
	71	20030067872	A1	2003-04-10	Harrell et al.	
	72	20030081582		2003-05-01	Jain et al.	
	73	20030107994		2003-06-12	Jacobs et al.	
	74	20030135631		2003-07-17	Li et al.	
	75	20030151753		2003-08-14	Li et al.	
	76	20030152036		2003-08-14	Quigg Brown et al.	
	77	20030204519	A1	2003-10-30	Sirivara et al.	
	78	20040003101	A1	2004-01-01	Roth et al.	
	79	20040030797	A1	2004-02-12	Akinlar et al.	

INFORMATION DISCLOSURE STATEMENT BY APPLICANT (Not for submission under 37 CFR 1.99)		
	Application Number	16876579
	Filing Date	2020-05-18
	First Named Inventor	David F. Brueck
	Art Unit	2454
	Examiner Name	Patel, Chirag R.
	Attorney Docket Number	066.0141X1C9

	80	20040031054	A1	2004-02-12	Dankworth et al.	
	81	20040054551	A1	2004-03-18	Ausubel et al.	
	82	20040071209		2004-04-15	Burg et al.	
	83	20040093420		2004-05-13	Gamble	
	84	20040143672	A1	2004-07-22	Padmanabham et al.	
	85	20040170392		2004-09-02	Lu et al.	
	86	20050108414		2005-05-19	Taylor et al.	
	87	20050123058		2005-06-09	Greenbaum et al.	
	88	20070024705		2007-02-01	Richter et al.	
	89	20080028428		2008-01-31	Jeong et al.	
	90	20080056373		2008-03-06	Newlin et al.	

INFORMATION DISCLOSURE STATEMENT BY APPLICANT (Not for submission under 37 CFR 1.99)		
	Application Number	16876579
	Filing Date	2020-05-18
	First Named Inventor	David F. Brueck
	Art Unit	2454
	Examiner Name	Patel, Chirag R.
	Attorney Docket Number	066.0141X1C9

	91	20080162713		2008-07-03	Bowra et al.	
	92	20080195744		2008-08-14	Bowra et al.	
	93	20020029274	A1	2002-03-07	Allen	
	94	20060075446	A1	2006-04-06	Klemets et al.	
	95	20080104647	A1	2008-05-01	Hannuksela	
	96	20040220926	A1	2004-11-04	Lamkin et al.	
	97	20010013128	A1	2001-08-09	Hagai et al.	
	98	20030204602	A1	2003-10-30	Hudson et al.	
	99	20040010613	A1	2004-01-15	Apostolopoulos et al.	

If you wish to add additional U.S. Published Application citation information please click the Add button. Add

FOREIGN PATENT DOCUMENTS Remove

Examiner Initial*	Cite No	Foreign Document Number[3]	Country Code[2]	Kind Code[4]	Publication Date	Name of Patentee or Applicant of cited Document	Pages,Columns,Lines where Relevant Passages or Relevant Figures Appear	T[5]

ALL REFERENCES CONSIDERED EXCEPT WHERE LINED THROUGH. /C.R.P/

INFORMATION DISCLOSURE STATEMENT BY APPLICANT (Not for submission under 37 CFR 1.99)		
	Application Number	16876579
	Filing Date	2020-05-18
	First Named Inventor	David F. Brueck
	Art Unit	2454
	Examiner Name	Patel, Chirag R.
	Attorney Docket Number	066.0141X1C9

	1	2011004225	JP	A	2011-01-06	Hodoshima		
	2	2001067264	WO	A1	2001-09-13	Streamcenter, Inc.		
	3	200192752	JP		2001-04-06	Hitachi Information Systems Ltd.		
	4	2006010113	WO	A2	2006-01-26	Network Foundation Technologies, LLC		
	5	2004025405	WO	A2	2004-03-25	Thomson Licensing S.A.		
	6	2466482	CA	A1	2003-05-22	MusicMatch Inc.		
	7	2000-201343	JP		2000-07-18	Toshiba Corp.		
	8	0919952	EP	A1	1999-06-02	Mattavelli et al.		
	9	1670256	EP	A2	2006-06-14	Klements et al.		
	10	1777969	EP		2007-04-25	British Telcom		
	11	1298931	EP	A2	2003-04-02	Oplayo Oy		

INFORMATION DISCLOSURE STATEMENT BY APPLICANT (Not for submission under 37 CFR 1.99)		
	Application Number	16876579
	Filing Date	2020-05-18
	First Named Inventor	David F. Brueck
	Art Unit	2454
	Examiner Name	Patel, Chirag R.
	Attorney Docket Number	066.0141X1C9

	12	1202487	EP	A2	2002-05-02	Toshiba KK		
	13	1395014	EP	A1	2004-03-03	Matsushita Electric Ind. Co. Ltd.		
	14	2367219	GB	A	2002-03-27	Vintage Global		

If you wish to add additional Foreign Patent Document citation information please click the Add button Add

NON-PATENT LITERATURE DOCUMENTS Remove

Examiner Initials*	Cite No	Include name of the author (in CAPITAL LETTERS), title of the article (when appropriate), title of the item (book, magazine, journal, serial, symposium, catalog, etc), date, pages(s), volume-issue number(s), publisher, city and/or country where published.	T5
	1	FUJISAWA, HIROSHI ET AL. "Implementaton of Efficient Access Mechanism for Multiple Mirror-Servers" IPSJ SIG Technical Report, vol. 2004, no. 9 (2004-DPS-116), January 30, 2004, Information Processing Society of Japan, pp. 37-42.	☒
	2	LIU, JIANGCHUAN ET AL. "Adaptive Video Multicast Over the Internet" IEEE Computer Society, 2003.	☒
	3	"The meaning of performance factor---English-Japanese Weblio Dictionary", [online], February 24, 2012, [searched on February 24, 2012], the Internet <URL:http://ejje.weblio.jp/content/performance+factor>.	☒
	4	TSURU, ET AL. "Recent evolution of the Internet measurement and inference techniques", IEICE Technical Report, Vol. 103, No. 123, pp. 37-42, June 12, 2003.	☒
	5	REJAIE, REZA ET AL. "Architectural Considerations for Playback of Quality Adaptive Video OVer the Internet" University of Southern California, Information Sciences Institute, 1998.	☒
	6	ROY, SUMIT ET AL. "A System Architecture for Managing Mobile Streaming Media Services" Streaming Media Systems Group, Hewlett-Packard Laboratories, 2003.	☒

ALL REFERENCES CONSIDERED EXCEPT WHERE LINED THROUGH. /C.R.P/

INFORMATION DISCLOSURE STATEMENT BY APPLICANT (Not for submission under 37 CFR 1.99)		
	Application Number	16876579
	Filing Date	2020-05-18
	First Named Inventor	David F. Brueck
	Art Unit	2454
	Examiner Name	Patel, Chirag R.
	Attorney Docket Number	066.0141X1C9

	7	XU, DONGYAN ET AL. "On Peer-to-Peer Media Streaming" Department of Computer Sciences, Purdue University, 2002.	☒
	8	KOZAMERINK, FRANC "Media Streaming Over the Internet - An Over of Delivery Technologies" EBU Technical Review, October 2002.	☒
	9	LIENHART, RAINER ET AL. "Challenges in Distributed Video Management and Delivery" Intel Corporation, EECS Dept., UC Berkeley, 2000-2002.	☒
	10	ZHANG, XINYAN ET AL. "CoolStreaming/DONet: A Data-Driven Overlay Network for Peer-to-Peer Live Media Streaming" IEEE 2005.	☒
	11	GUO, YANG "DirectStream: A Directory-Based Peer-to-Peer Video Streaming Service" LexisNexis, Elsevier B.V. 2007.	☒

If you wish to add additional non-patent literature document citation information please click the Add button Add

EXAMINER SIGNATURE

Examiner Signature	/CHIRAG R PATEL/	Date Considered	09/12/2022

*EXAMINER: Initial if reference considered, whether or not citation is in conformance with MPEP 609. Draw line through a citation if not in conformance and not considered. Include copy of this form with next communication to applicant.

[1] See Kind Codes of USPTO Patent Documents at www.USPTO.GOV or MPEP 901.04. [2] Enter office that issued the document, by the two-letter code (WIPO Standard ST.3). [3] For Japanese patent documents, the indication of the year of the reign of the Emperor must precede the serial number of the patent document. [4] Kind of document by the appropriate symbols as indicated on the document under WIPO Standard ST.16 if possible. [5] Applicant is to place a check mark here if English language translation is attached.

ALL REFERENCES CONSIDERED EXCEPT WHERE LINED THROUGH. /C.R.P./

INFORMATION DISCLOSURE STATEMENT BY APPLICANT (Not for submission under 37 CFR 1.99)		
	Application Number	16876579
	Filing Date	2020-05-18
	First Named Inventor	David F. Brueck
	Art Unit	2454
	Examiner Name	Patel, Chirag R.
	Attorney Docket Number	066.0141X1C9

CERTIFICATION STATEMENT

Please see 37 CFR 1.97 and 1.98 to make the appropriate selection(s):

That each item of information contained in the information disclosure statement was first cited in any communication from a foreign patent office in a counterpart foreign application not more than three months prior to the filing of the information disclosure statement. See 37 CFR 1.97(e)(1).

OR

☐ That no item of information contained in the information disclosure statement was cited in a communication from a foreign patent office in a counterpart foreign application, and, to the knowledge of the person signing the certification after making reasonable inquiry, no item of information contained in the information disclosure statement was known to any individual designated in 37 CFR 1.56(c) more than three months prior to the filing of the information disclosure statement. See 37 CFR 1.97(e)(2).

☒ See attached certification statement.

The fee set forth in 37 CFR 1.17 (p) has been submitted herewith.

A certification statement is not submitted herewith.

SIGNATURE

A signature of the applicant or representative is required in accordance with CFR 1.33, 10.18. Please see CFR 1.4(d) for the form of the signature.

Signature	/BRETT A. CARLSON/	Date (YYYY-MM-DD)	2020-11-16
Name/Print	Brett A. Carlson	Registration Number	39928

This collection of information is required by 37 CFR 1.97 and 1.98. The information is required to obtain or retain a benefit by the public which is to file (and by the USPTO to process) an application. Confidentiality is governed by 35 U.S.C. 122 and 37 CFR 1.14. This collection is estimated to take 1 hour to complete, including gathering, preparing and submitting the completed application form to the USPTO. Time will vary depending upon the individual case. Any comments on the amount of time you require to complete this form and/or suggestions for reducing this burden, should be sent to the Chief Information Officer, U.S. Patent and Trademark Office, U.S. Department of Commerce, P.O. Box 1450, Alexandria, VA 22313-1450. DO NOT SEND FEES OR COMPLETED FORMS TO THIS ADDRESS. **SEND TO: Commissioner for Patents, P.O. Box 1450, Alexandria, VA 22313-1450.**

ALL REFERENCES CONSIDERED EXCEPT WHERE LINED THROUGH. /C.R.P/

Privacy Act Statement

The Privacy Act of 1974 (P.L. 93-579) requires that you be given certain information in connection with your submission of the attached form related to a patent application or patent. Accordingly, pursuant to the requirements of the Act, please be advised that: (1) the general authority for the collection of this information is 35 U.S.C. 2(b)(2); (2) furnishing of the information solicited is voluntary; and (3) the principal purpose for which the information is used by the U.S. Patent and Trademark Office is to process and/or examine your submission related to a patent application or patent. If you do not furnish the requested information, the U.S. Patent and Trademark Office may not be able to process and/or examine your submission, which may result in termination of proceedings or abandonment of the application or expiration of the patent.

The information provided by you in this form will be subject to the following routine uses:

1. The information on this form will be treated confidentially to the extent allowed under the Freedom of Information Act (5 U.S.C. 552) and the Privacy Act (5 U.S.C. 552a). Records from this system of records may be disclosed to the Department of Justice to determine whether the Freedom of Information Act requires disclosure of these record s.

2. A record from this system of records may be disclosed, as a routine use, in the course of presenting evidence to a court, magistrate, or administrative tribunal, including disclosures to opposing counsel in the course of settlement negotiations.

3. A record in this system of records may be disclosed, as a routine use, to a Member of Congress submitting a request involving an individual, to whom the record pertains, when the individual has requested assistance from the Member with respect to the subject matter of the record.

4. A record in this system of records may be disclosed, as a routine use, to a contractor of the Agency having need for the information in order to perform a contract. Recipients of information shall be required to comply with the requirements of the Privacy Act of 1974, as amended, pursuant to 5 U.S.C. 552a(m).

5. A record related to an International Application filed under the Patent Cooperation Treaty in this system of records may be disclosed, as a routine use, to the International Bureau of the World Intellectual Property Organization, pursuant to the Patent Cooperation Treaty.

6. A record in this system of records may be disclosed, as a routine use, to another federal agency for purposes of National Security review (35 U.S.C. 181) and for review pursuant to the Atomic Energy Act (42 U.S.C. 218(c)).

7. A record from this system of records may be disclosed, as a routine use, to the Administrator, General Services, or his/her designee, during an inspection of records conducted by GSA as part of that agency's responsibility to recommend improvements in records management practices and programs, under authority of 44 U.S.C. 2904 and 2906. Such disclosure shall be made in accordance with the GSA regulations governing inspection of records for this purpose, and any other relevant (i.e., GSA or Commerce) directive. Such disclosure shall not be used to make determinations about individuals.

8. A record from this system of records may be disclosed, as a routine use, to the public after either publication of the application pursuant to 35 U.S.C. 122(b) or issuance of a patent pursuant to 35 U.S.C. 151. Further, a record may be disclosed, subject to the limitations of 37 CFR 1.14, as a routine use, to the public if the record was filed in an application which became abandoned or in which the proceedings were terminated and which application is referenced by either a published application, an application open to public inspections or an issued patent.

9. A record from this system of records may be disclosed, as a routine use, to a Federal, State, or local law enforcement agency, if the USPTO becomes aware of a violation or potential violation of law or regulation.

ALL REFERENCES CONSIDERED EXCEPT WHERE LISTED HEREIN. /J.S.H.

DISH EXHIBIT 2002, Page 1404
Avio Frequites Ltd. v. Dish Technologies L.L.C.
IPR2024-00047

UNITED STATES PATENT AND TRADEMARK OFFICE

UNITED STATES DEPARTMENT OF COMMERCE
United States Patent and Trademark Office
Address: COMMISSIONER FOR PATENTS
P.O. Box 1450
Alexandria, Virginia 22313-1450
www.uspto.gov

APPLICATION NO.	ISSUE DATE	PATENT NO.	ATTORNEY DOCKET NO.	CONFIRMATION NO.
16/876,579	10/11/2022	11470138	9401-00254	3720

70560 7590 09/21/2022

KW LAW LLP (Dish Technologies L.L.C.)
6122 N 7th St Suite D
Phoenix, AZ 85014

ISSUE NOTIFICATION

The projected patent number and issue date are specified above.

Determination of Patent Term Adjustment under 35 U.S.C. 154 (b)
(application filed on or after May 29, 2000)

The Patent Term Adjustment is 0 day(s). Any patent to issue from the above-identified application will include an indication of the adjustment on the front page.

If a Continued Prosecution Application (CPA) was filed in the above-identified application, the filing date that determines Patent Term Adjustment is the filing date of the most recent CPA.

Applicant will be able to obtain more detailed information by accessing the Patent Application Information Retrieval (PAIR) WEB site (http://pair.uspto.gov).

Any questions regarding the Patent Term Extension or Adjustment determination should be directed to the Office of Patent Legal Administration at (571)-272-7702. Questions relating to issue and publication fee payments should be directed to the Application Assistance Unit (AAU) of the Office of Patents Stakeholder Experience (OPSE), Stakeholder Support Division (SSD) at (571)-272-4200.

INVENTOR(s) (Please see PAIR WEB site http://pair.uspto.gov for additional inventors):

DAVID F. BRUECK, SARATOGA SPRINGS, UT;
MARK B. HURST, CEDAR HILLS, UT;
R. DREW MAJOR, OREM, UT;

APPLICANT(s) (Please see PAIR WEB site http://pair.uspto.gov for additional applicants):

DISH Technologies L.L.C., Englewood, CO

The United States represents the largest, most dynamic marketplace in the world and is an unparalleled location for business investment, innovation, and commercialization of new technologies. The USA offers tremendous resources and advantages for those who invest and manufacture goods here. Through SelectUSA, our nation works to encourage and facilitate business investment. To learn more about why the USA is the best country in the world to develop technology, manufacture products, and grow your business, visit SelectUSA.gov.