US 20090194532A1

(19) United States

(12) Patent Application Publication

Yang et al.

(10) Pub. No.: US 2009/0194532 A1

(43) Pub. Date: Aug. 6, 2009

(54) **TRASH CAN WITH POWER OPERATED LID**

(75) Inventors: **Frank Yang**, Rancho Palos Verdes, CA (US); **Tzu-Hao Wei**, Hacienda Heights, CA (US); **Myk Wayne Lum**, Irvine, CA (US); **Yoon J. Kim**, Long Beach, CA (US)

Correspondence Address:
KNOBBE MARTENS OLSON & BEAR LLP
2040 MAIN STREET, FOURTEENTH FLOOR
IRVINE, CA 92614 (US)

(73) Assignee: **SIMPLEHUMAN, LLC**, Torrance, CA (US)

(21) Appl. No.: **12/024,946**

(22) Filed: **Feb. 1, 2008**

Publication Classification

(51) **Int. Cl.**
B65D 55/00 (2006.01)
B65D 43/26 (2006.01)

(52) **U.S. Cl.** **220/211**; 220/263; 220/262

(57) **ABSTRACT**

A trash can include a sensor for detecting the presence of an object near a portion of the trash can. The detection of the object can be used to signal the trash can to open its lid. The trash can include an electronic drive unit for opening and closing the lid.

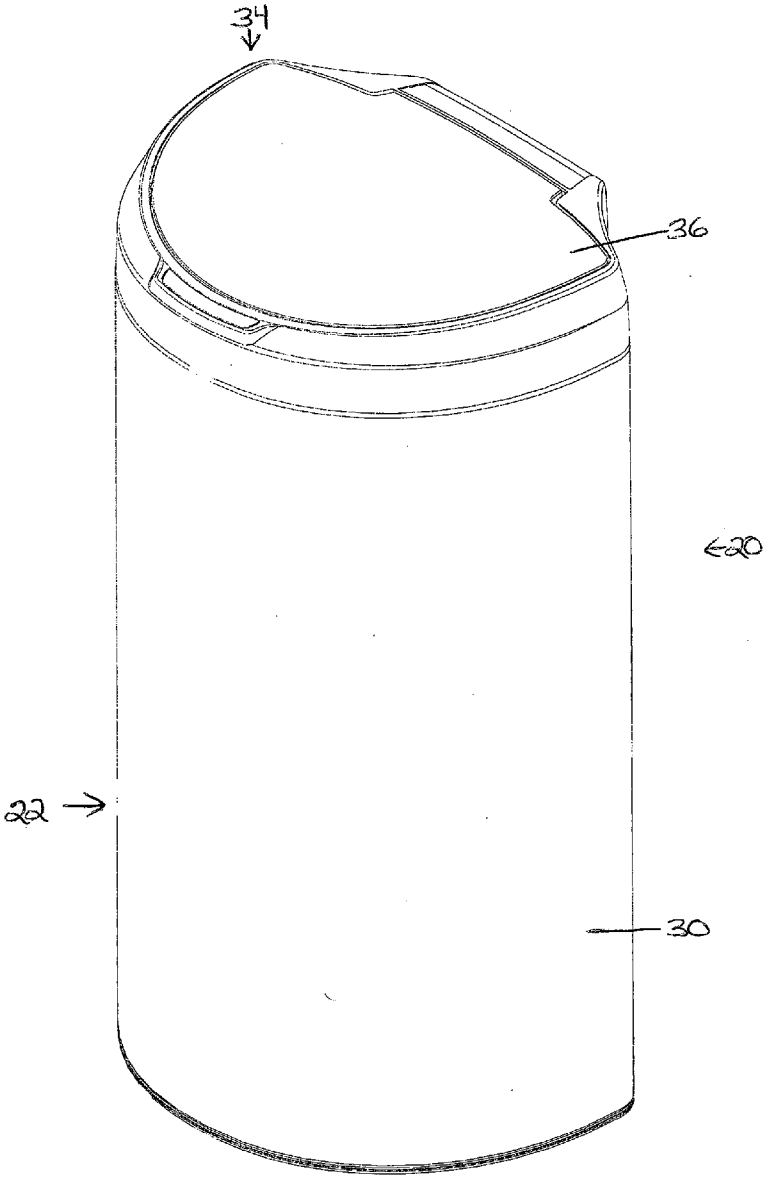

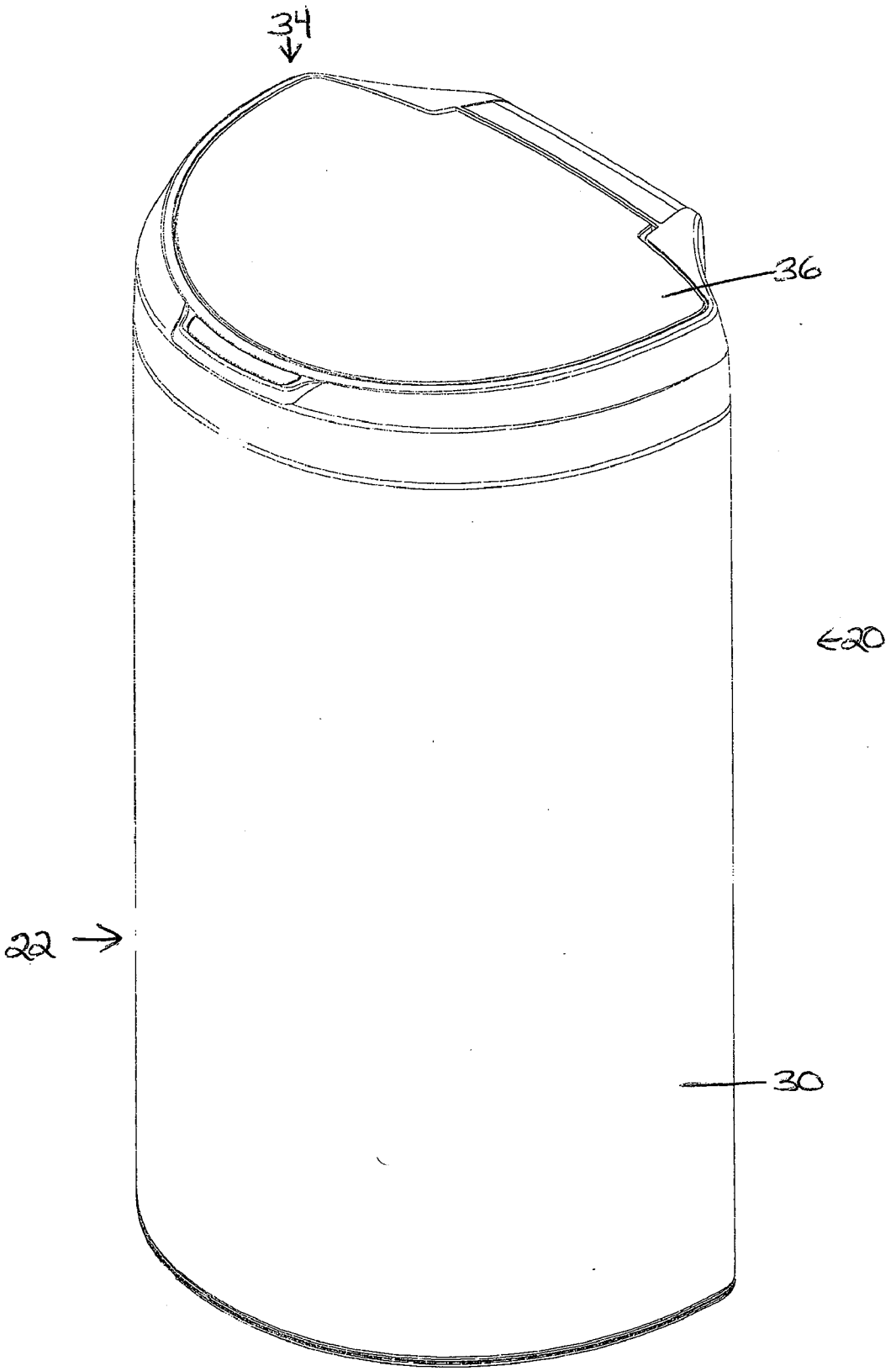

FIG. 1

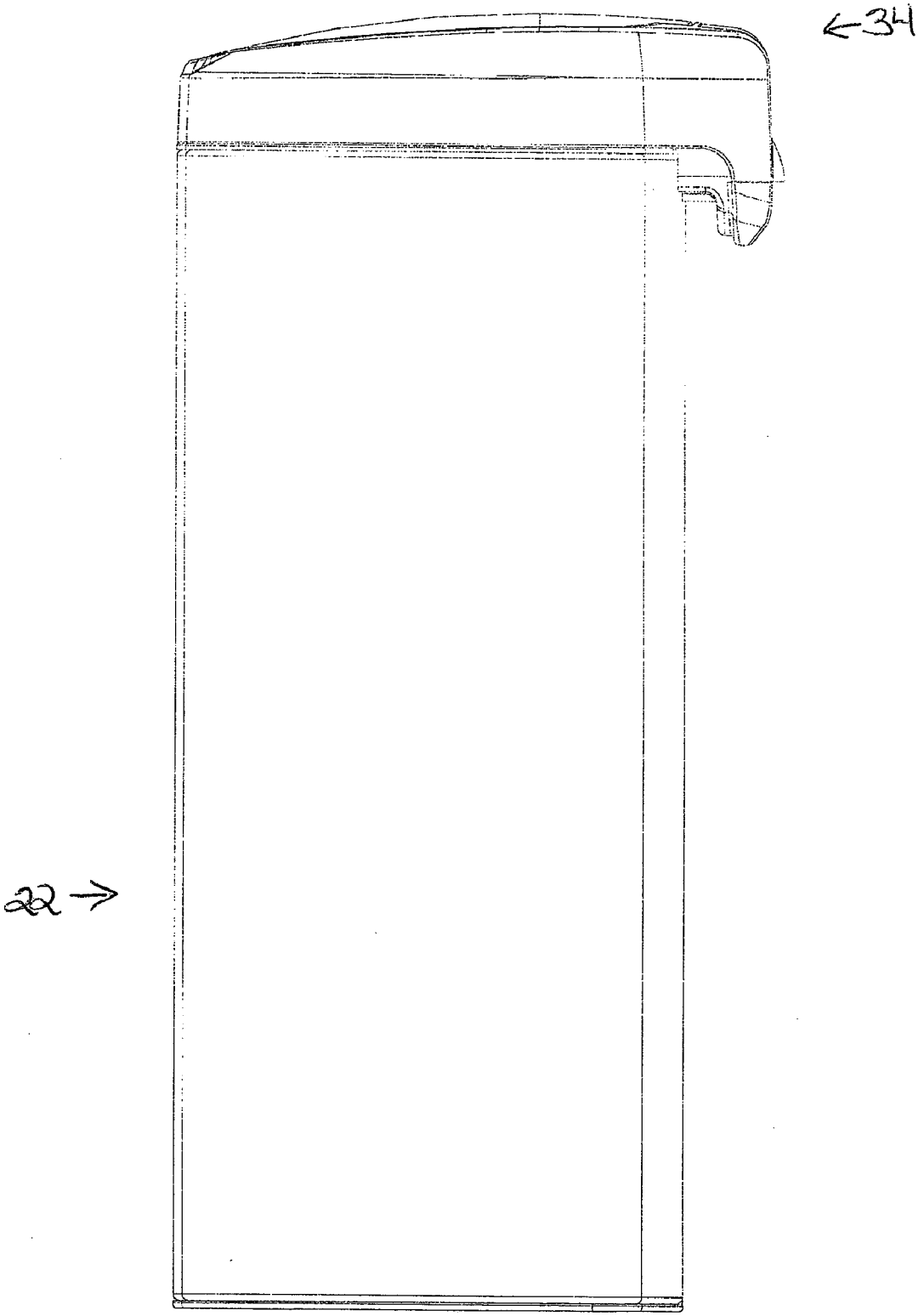

FIG. 2

VOLUME DISTRIBUTORS, Ex. 1008
VOLUME DISTRIBUTORS, INC. v. SIMPLEHUMAN LLC, IPR2024-00050

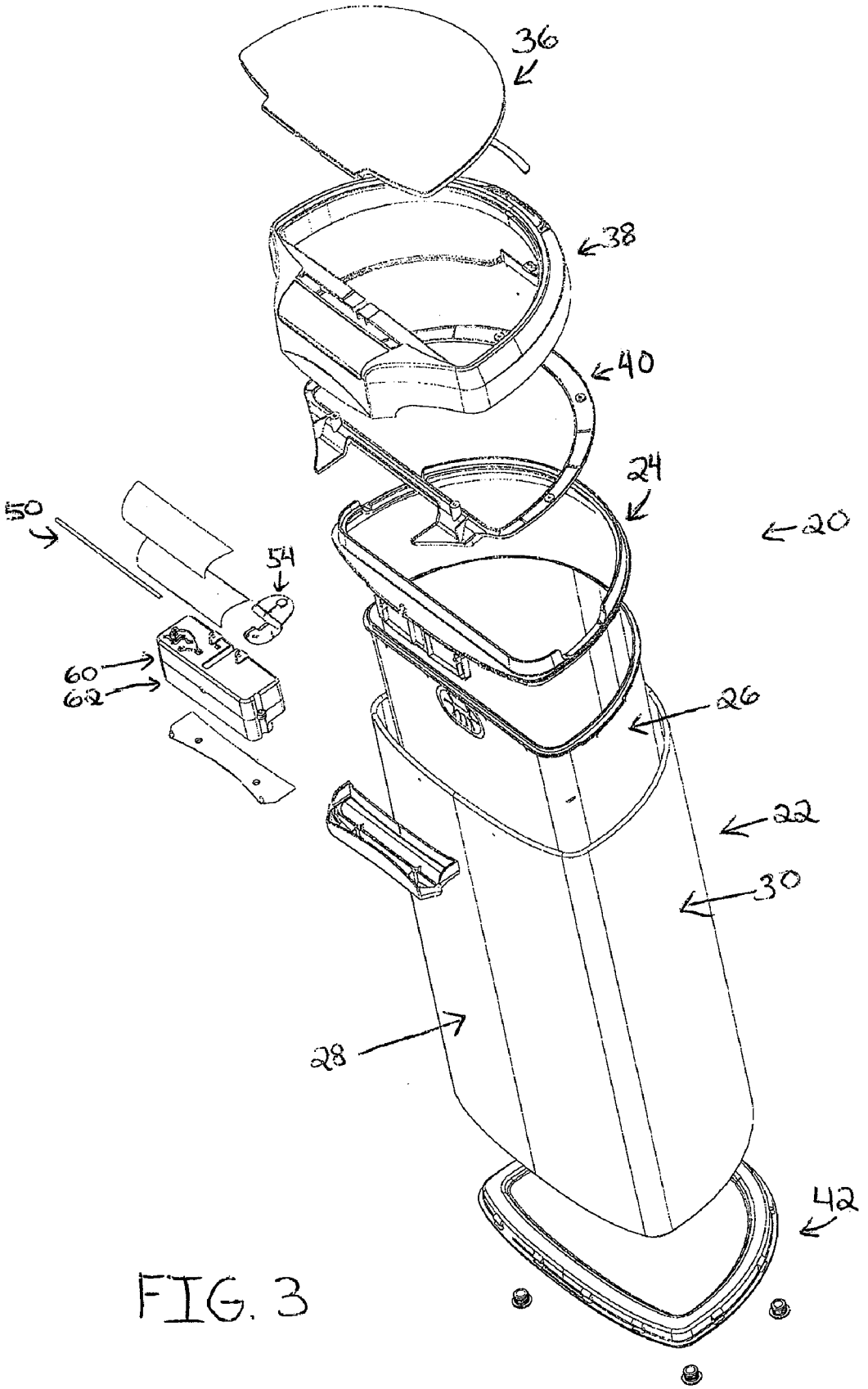

FIG. 3

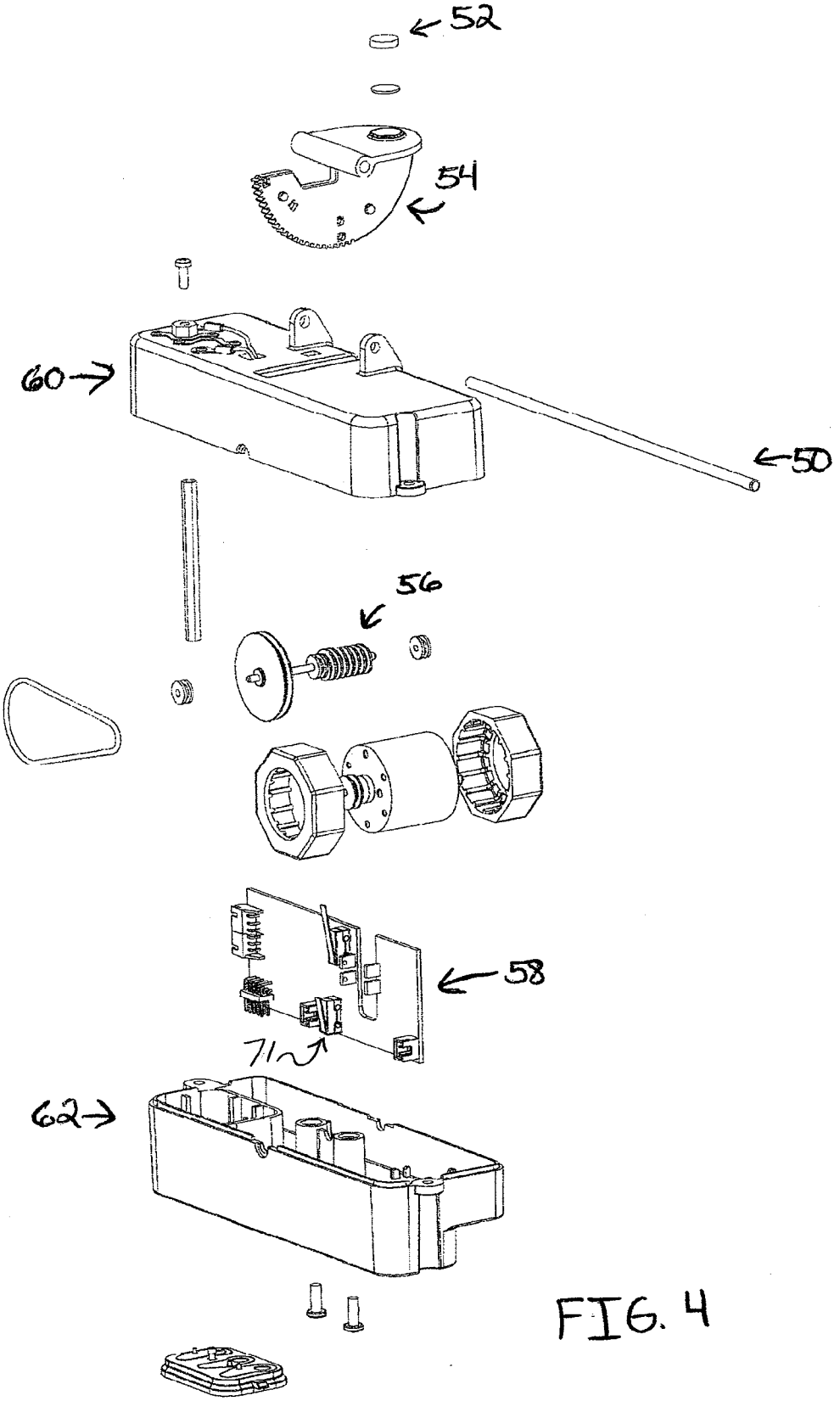

FIG. 4

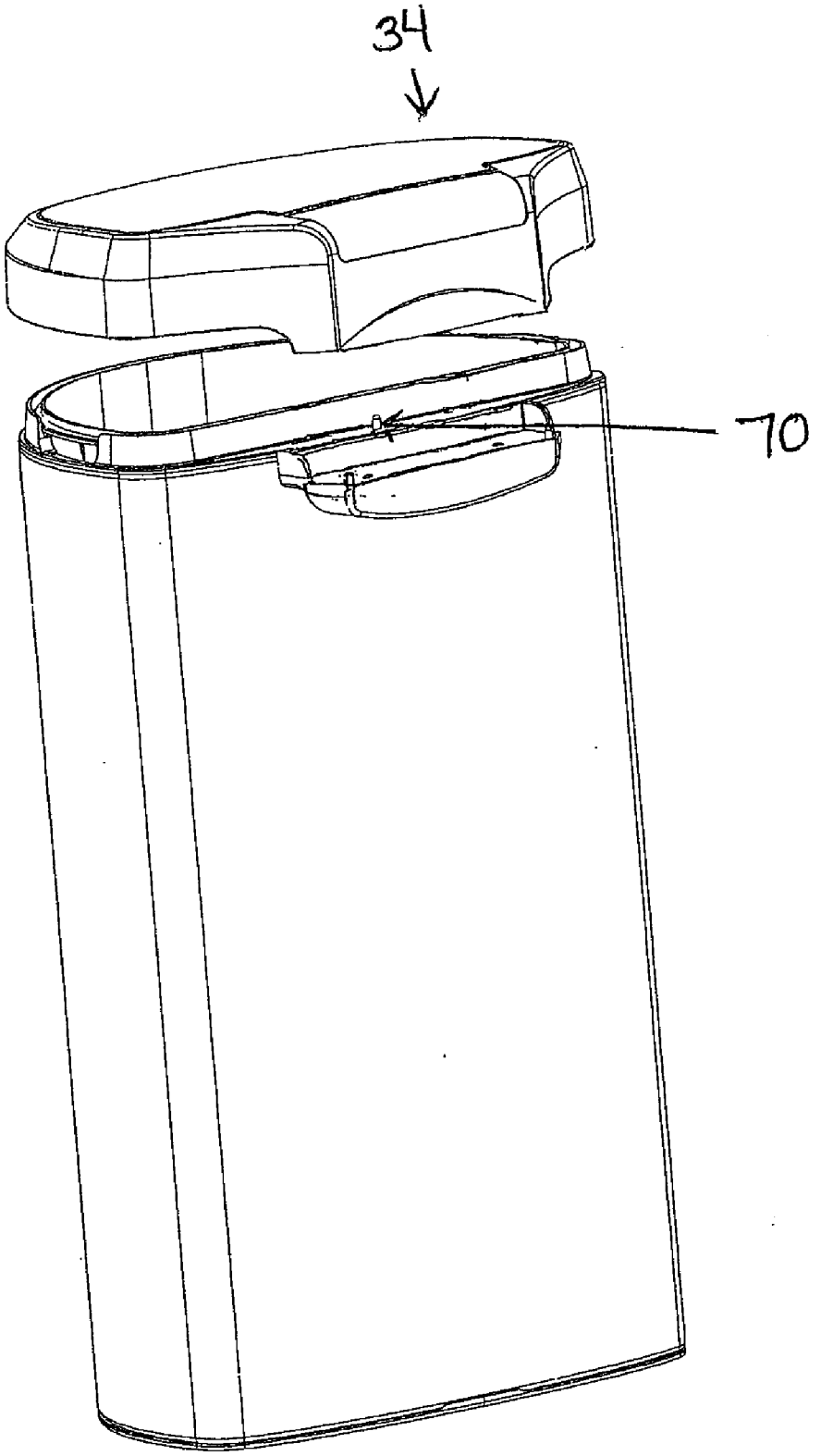

FIG. 5

VOLUME DISTRIBUTORS, Ex. 1008
VOLUME DISTRIBUTORS, INC. v. SIMPLEHUMAN LLC, IPR2024-00050

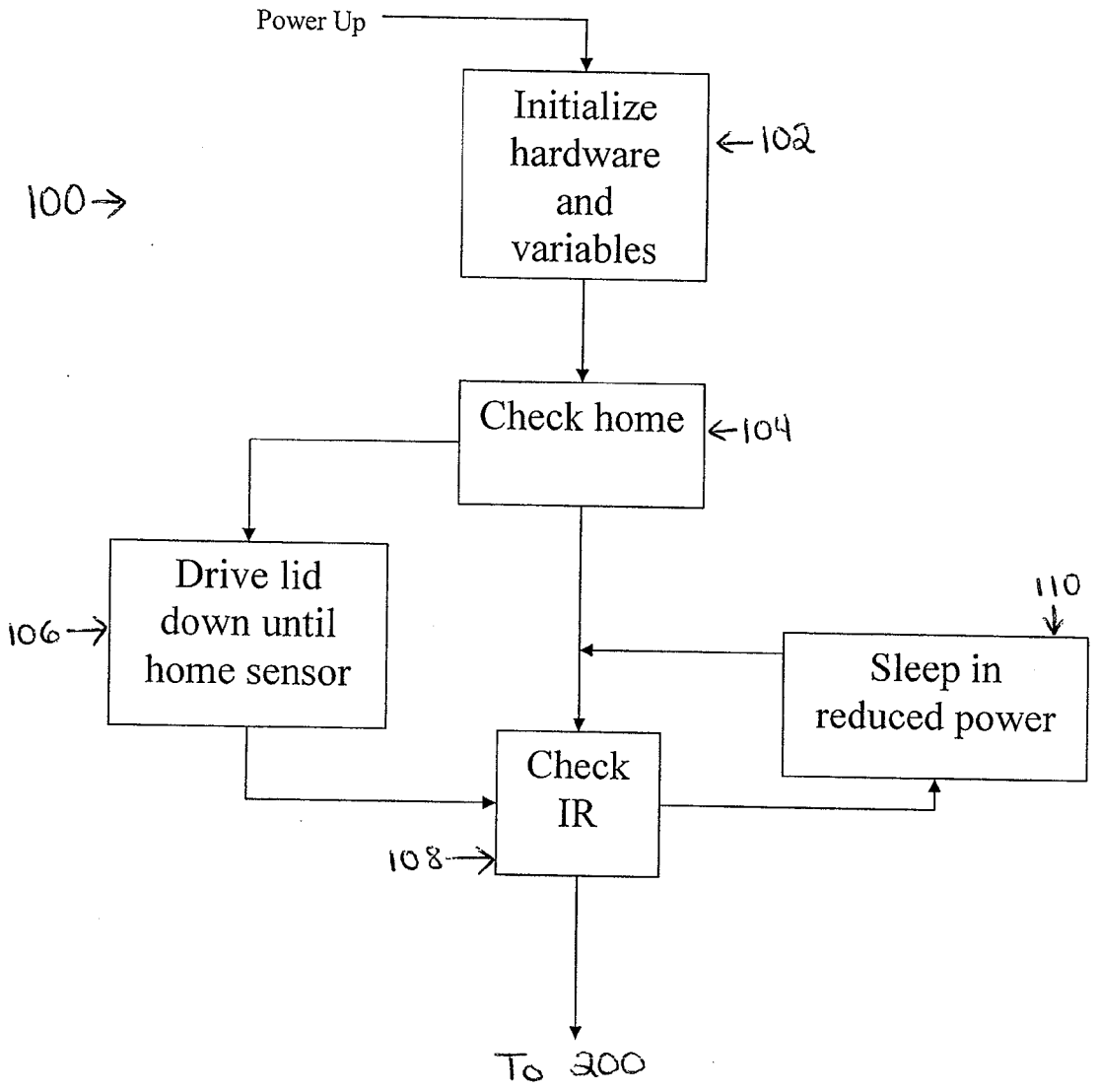
Power Up
Initialize hardware and variables
102
100
Check home
104
Drive lid down until home sensor
106
110
Sleep in reduced power
Check IR
108
To 200

FIG. 6

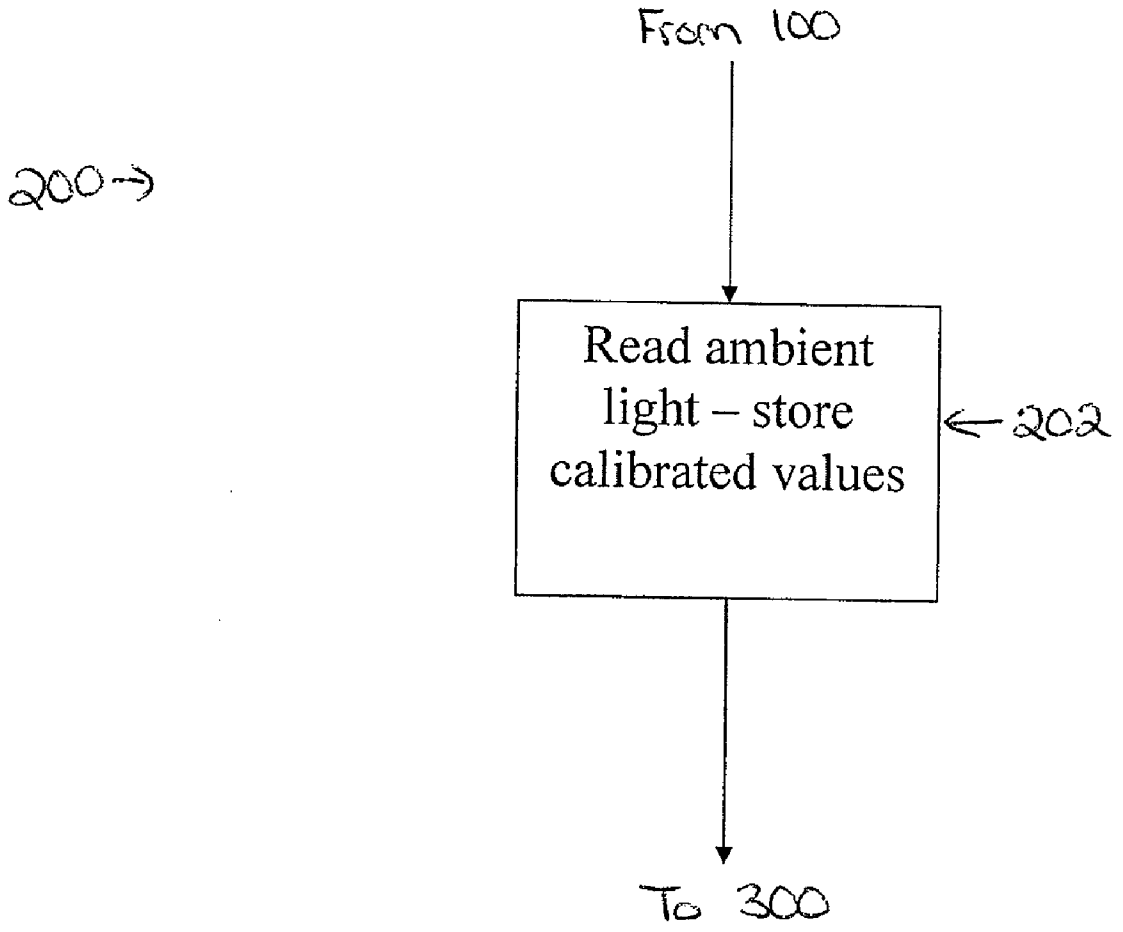

FIG. 7

VOLUME DISTRIBUTORS, Ex. 1008
VOLUME DISTRIBUTORS, INC. v. SIMPLEHUMAN LLC, IPR2024-00050

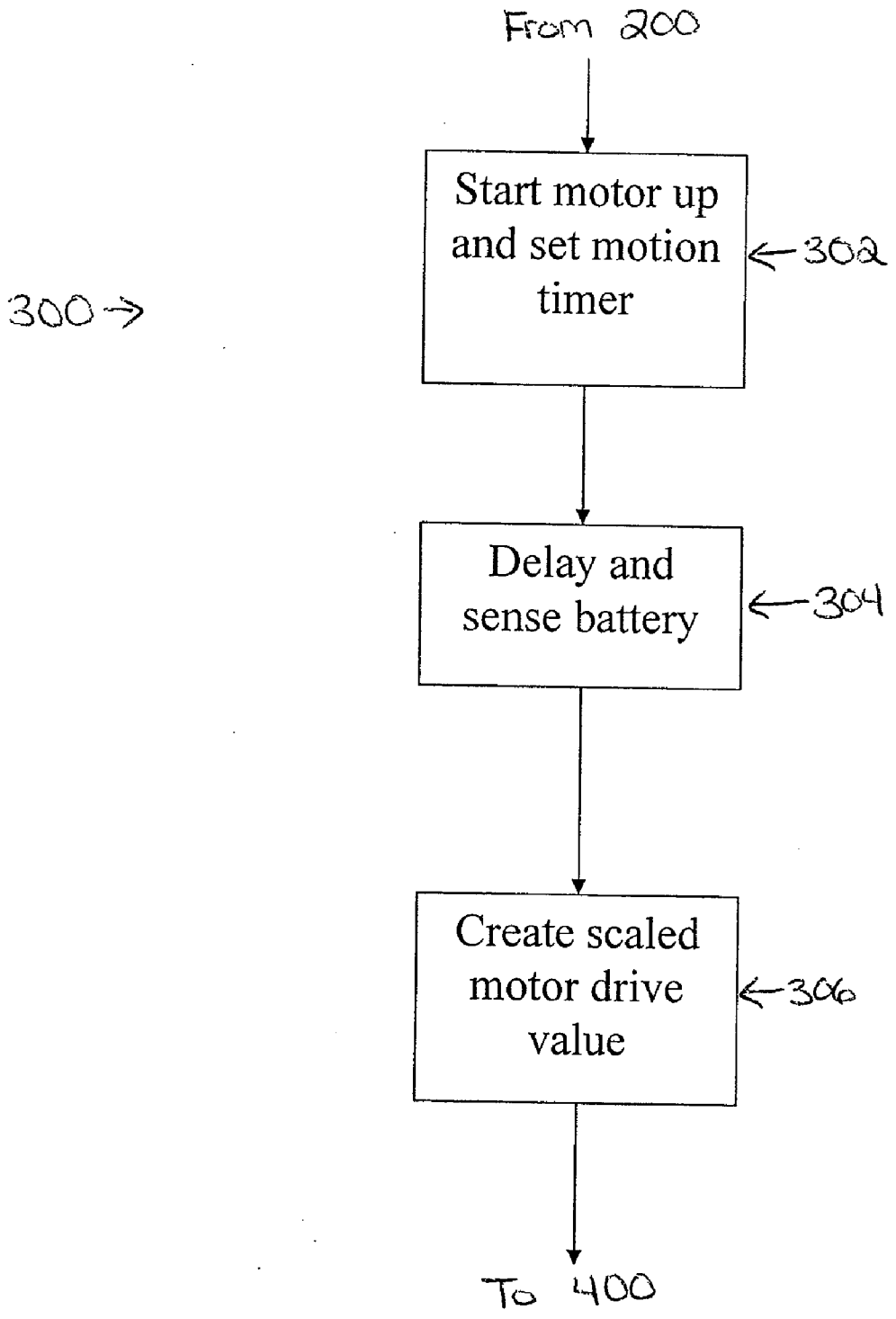
From 200
Start motor up and set motion timer
302
300
Delay and sense battery
304
Create scaled motor drive value
306
To 400

FIG. 8

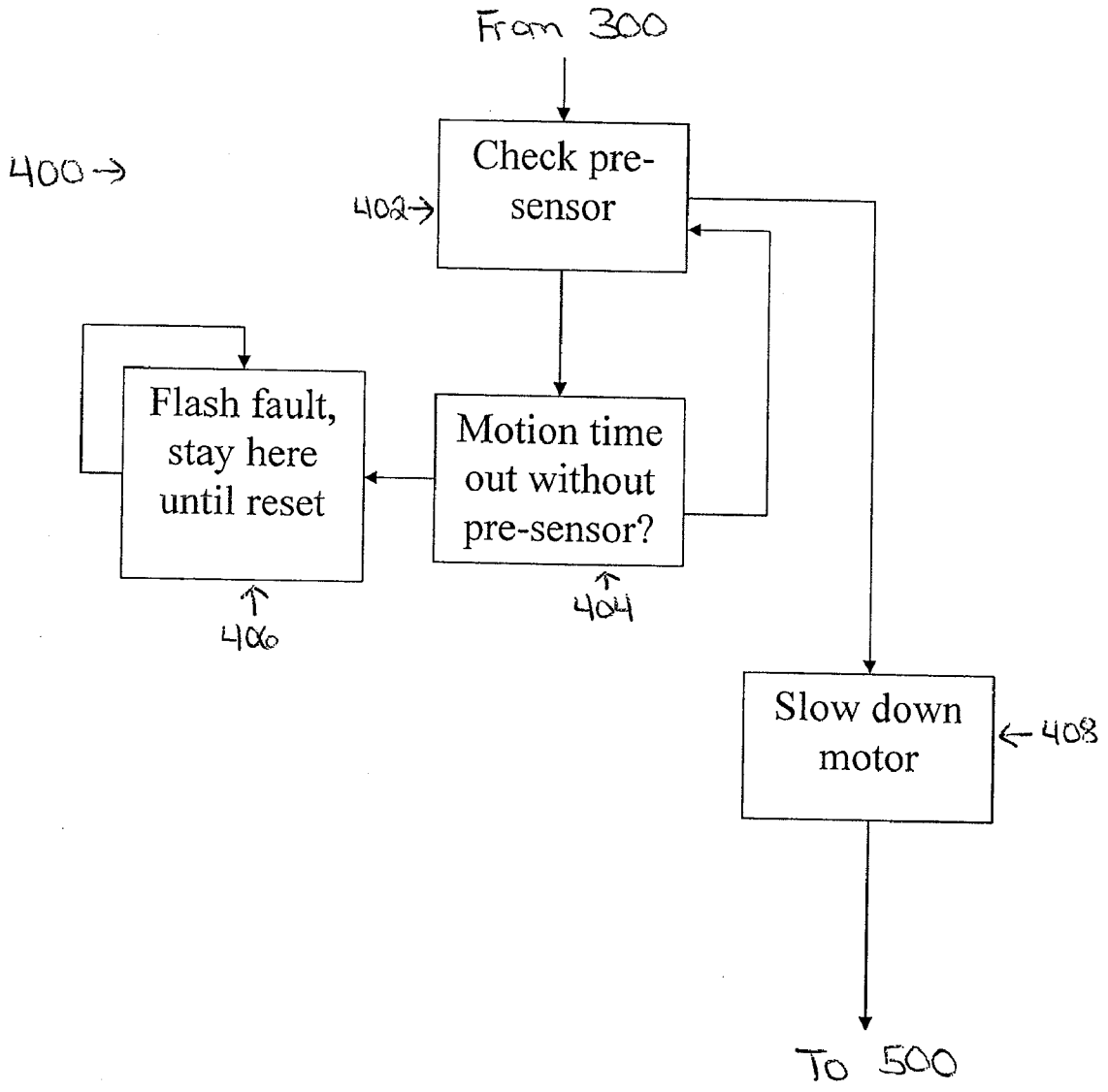
From 300
400
Check pre-sensor
402
Flash fault, stay here until reset
Motion time out without pre-sensor?
406
404
Slow down motor
408
To 500

FIG. 9

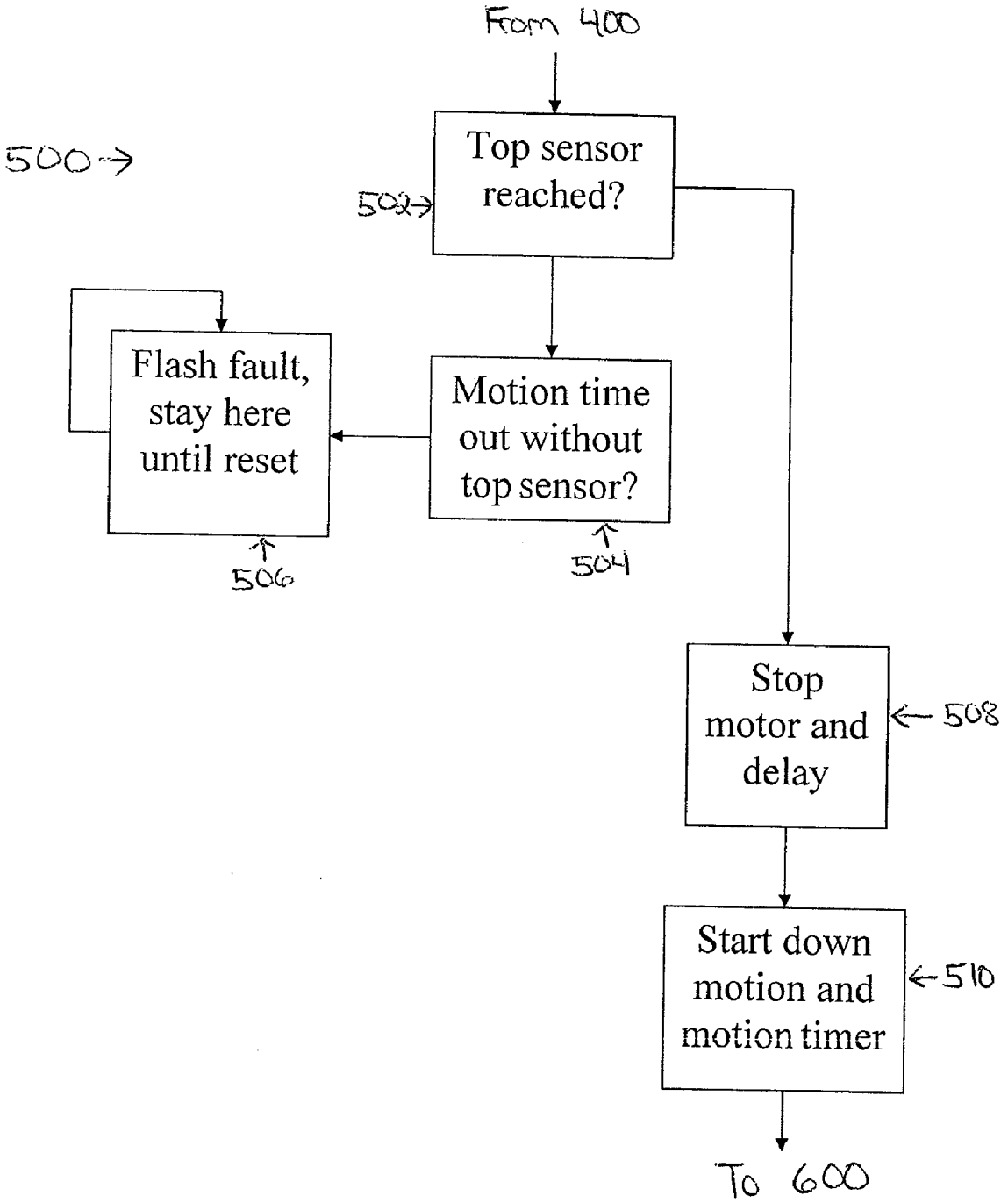
From 400
500
Top sensor reached?
502
Flash fault, stay here until reset
Motion time out without top sensor?
506
504
Stop motor and delay
508
Start down motion and motion timer
510
To 600

FIG. 10

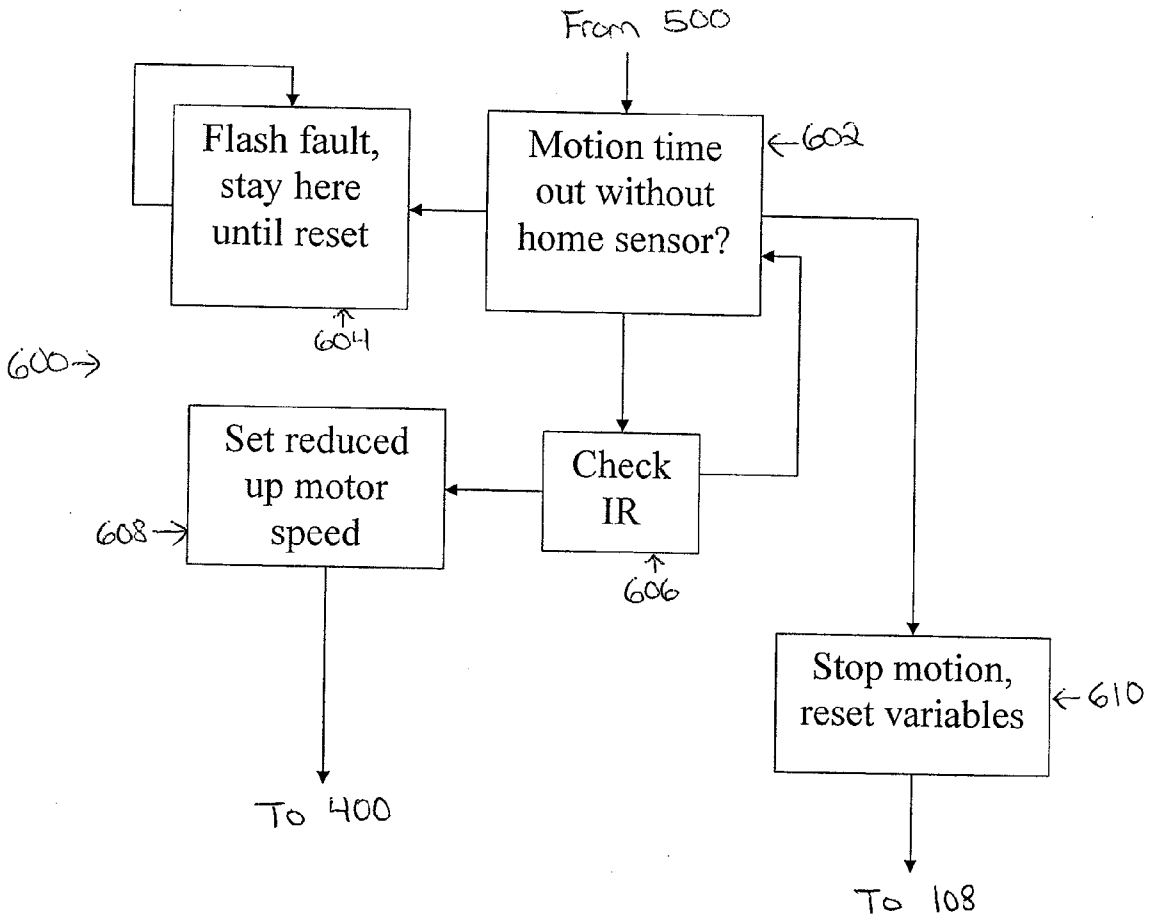
From 500
Motion time out without home sensor?
602
Flash fault, stay here until reset
604
600
Check IR
606
Set reduced up motor speed
608
Stop motion, reset variables
610
To 400
To 108

FIG. 11

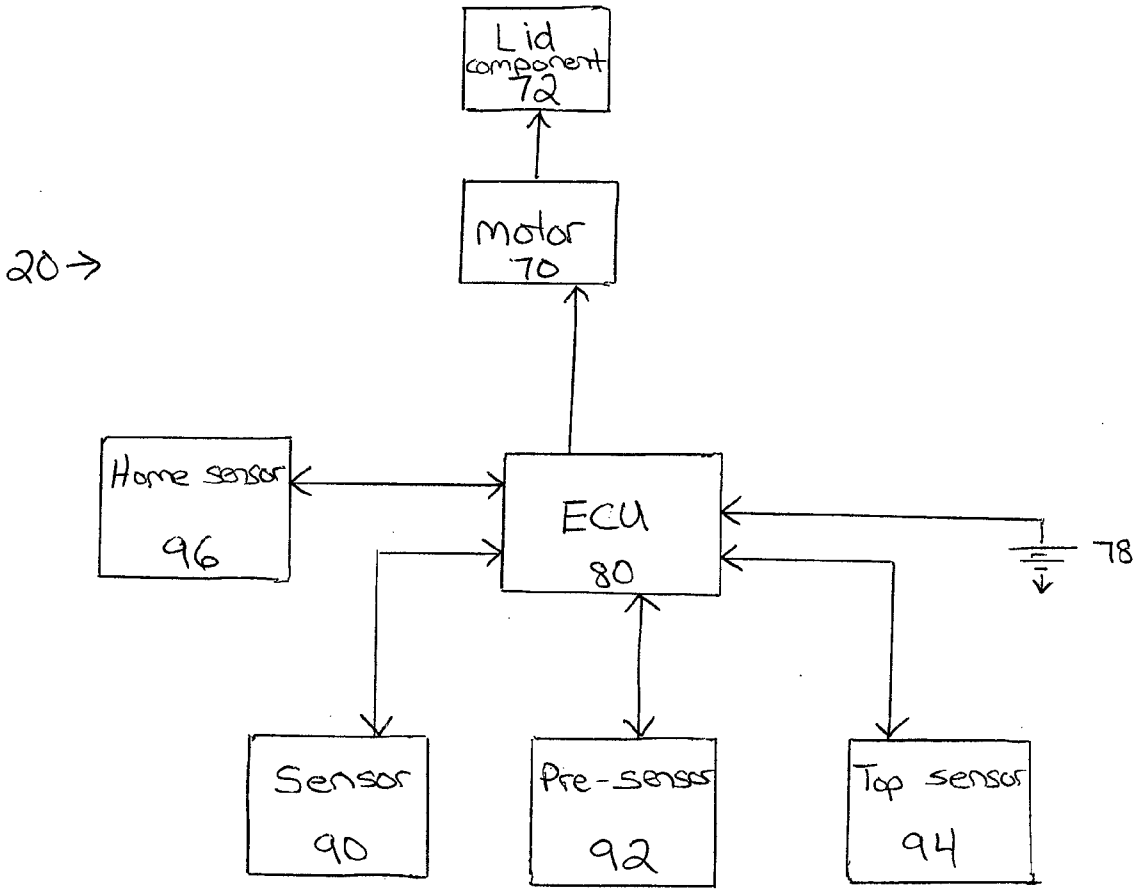
Lid component 72
Motor 70
20
Home sensor 96
ECU 80
78
Sensor 90
Pre-sensor 92
Top sensor 94

FIG. 12

TRASH CAN WITH POWER OPERATED LID

BACKGROUND OF THE INVENTION

[0001] 1. Field of the Invention

[0002] The present inventions relate to power operated devices, such as power operated lids or doors for receptacles.

[0003] 2. Description of the Related Art

[0004] Receptacles and other devices having a lid or a door are used in a variety of different settings. For example, in both residential and commercial settings, trash cans and other devices often have lids for protecting or preventing the escape of the contents of the receptacle. In the context of trash cans, some trash cans include lids or doors to prevent odors from escaping and to hide the trash within the receptacle from view. Additionally, the lid of a trash can helps prevent contamination from escaping from the receptacle.

[0005] Recently, trash cans with power operated lids have become commercially available. Such trash cans can include a sensor positioned on or near the lid. Such a sensor can be configured to detect movement, such as a user's hand being waived near the sensor, as a signal for opening the lid. When such a sensor is activated, a motor within the trash receptacle opens the lid or door and thus allows a user to place items into the receptacle. Afterwards, the lid can be automatically closed.

[0006] However, such motion sensors present some difficulties. For example, users of current trash cans with power operated lids can experience problems if the trash within the receptacle or can is piled higher than the level of the lid itself. If the trash or other material within the can is higher than the level of the lid itself, the lid will be unable to completely close. This can cause the motor or batteries to wear down, continue running, and/or ultimately fail. It can also force the user to reset the controller, remove trash, or manually compress the trash until the lid can be closed.

[0007] Additionally, typical motion sensors are configured to detect changes in reflected light. Thus, a user's clothing and skin color can cause the device to operate differently. More particularly, such sensors are better able to detect movement of a user's hand having one clothing and skin color combination, but less sensitive to the movement of another user's hand having a different clothing and/or skin color combination. Additionally, sensors can be sensitive to lights being turned on and off in a room, or moved across or in front of the trash can.

[0008] If such a sensor is calibrated to detect the movement of any user's hand or body part within, for example, twelve inches of the sensor, the sensor may also be triggered accidentally. If the sensor is triggered accidentally too often, the batteries powering such a device can be worn out too quickly, energy can be wasted, and/or the motor can be over used. However, if the sensors are calibrated to be less sensitive, it can be difficult for some users, depending on their clothing and/or skin color combination, to activate the sensor conveniently.

[0009] Problems also exist if the battery or other power source accumulates a charge or charges on its ends. These charges may give a false indication of the actual voltage differential across the battery, and can cause the motor and/or lid to move or act differently or run at different speeds during different uses.

[0010] Additionally, problems exist if users wish to empty multiple sets or handfuls of trash. Once the sensor has been activated, the lid can rise to an open position, and then can automatically close. However, once the lid begins to close, the user is forced to wait until the lid has reached a fully closed position before it can be opened again. If the user suddenly wants to open the lid again, or has another collection of trash to throw away while the lid is closing, he or she must wait until the lid has returned to its fully closed position before activating the sensor again.

SUMMARY OF THE INVENTION

[0011] An aspect of at least one of the inventions disclosed herein includes the realization that occasionally, a user of a trash can having a power operated lid may desire to place or pile enough trash or material in the can such that the pile of trash sits higher than the level of the lid or door. In use, this can prevent the lid or door from fully closing. To address this problem, an enclosed receptacle can be provided with a power operated lid or door with a drive mechanism or motor and gear assembly which is, at least in part, releasably coupled to the door to allow the drive mechanism to continue operating regardless of whether the door can fully close.

[0012] Thus, in accordance with at least one embodiment, an enclosed receptacle can comprise a receptacle portion defining a reservoir, a door mounted relative to the receptacle and configured to move between opened and closed positions, a power supply, and a motor and gear assembly configured to move the door between the opened and closed positions, at least a portion of the motor and gear assembly configured to be releasably coupled to the door.

[0013] Another aspect of at least one of the embodiments disclosed herein includes the realization that the problems associated with motion sensors mounted on a trash receptacle to detect movement of a user's hand or foot can be avoided by incorporating a light read module configured to read and store values corresponding to ambient light. For example, but without limitation, the sensor can be of the type that emits a predetermined frequency of infrared light within its immediate surroundings. When a user's hand or foot (or other object) moves in front of the sensor, and reflects back the infrared light at the same frequency it was being emitted, for a predetermined period of time, a light read module within the trash can's controller can be activated. When the light read module is activated, it can read ambient light values and store their calibrated values. These stored values can be used to compare with other light reflections later on. Thus, the sensor is less susceptible to false detections caused by other light reflecting sources in the room, including but not limited to lamps and interior lighting.

[0014] Thus, in accordance with at least one embodiment disclosed herein, an enclosed receptacle can comprise a receptacle portion defining a reservoir, a door mounted relative to the receptacle and configured to move between opened and closed positions, a power supply, a motor and gear assembly configured to move the door between the opened and closed positions, and a controller configured to control operation of the door, the controller comprising a light read module configured to read and store calibrated values corresponding to ambient light.

[0015] Yet another aspect of at least one of the inventions disclosed herein includes the realization that the voltage difference across a battery or other power source may change over time due to accumulation of charge at one or both ends. In order to accommodate for this change, and ensure motor speeds and lid movements which are substantially similar each time the device is used, an enclosed receptacle can

include a module which senses the battery and creates a scaled motor drive value prior to each use. In at least one embodiment, the module can first place a load on the battery or power source, and then sense the voltage across the battery prior to creating the scaled motor drive value.

[0016] Thus, in accordance with at least one embodiment disclosed herein, an enclosed receptacle can comprise a receptacle portion defining a reservoir, a door mounted relative to the receptacle and configured to move between opened and closed positions, a power supply, a motor and gear assembly configured to move the door between the opened and closed positions, and a controller configured to control operation of the door, the controller comprising a power supply sense module configured to sense a power supply voltage and create a scaled motor drive value.

[0017] Yet another aspect of at least one of the inventions disclosed herein includes the realization that users can often place items on top of trash can doors, or there can be obstructions in the pathway of an opening door. Additionally, the door, motor, or power source may malfunction or be too weak to open the door. In order to prevent a motor or power source from burning out, an enclosed receptacle can include a pre-sensor. The pre-sensor can monitor whether a portion of the motor and gear assembly or door has reached a predetermined location within a predetermined time period. If the sensor is not actuated, or does not detect the presence of the motor and gear assembly or door within the predetermined time period, a fault detection module can cause the motor to stop running. If the pre-sensor has been reached, then the door can slow down on its way to a fully open position.

[0018] Thus, in accordance with at least one embodiment disclosed herein, an enclosed receptacle can comprise a receptacle portion defining a reservoir, a door mounted relative to the receptacle and configured to move between opened and closed positions, a power supply, a motor and gear assembly configured to move the door between the opened and closed positions, and a controller configured to control operation of the door. The controller can comprise a door position monitor having a pre-sensor configured to detect when at least a portion of the motor and gear assembly has reached a predetermined position prior to a fully opened position, a braking module configured to slow the movement of the door after the door has reached the pre-sensor, and a fault detection module configured to stop operation of the motor and to provide an indication of a fault if the motor has been operating for more than a predetermined time period.

[0019] Yet another aspect of at least one of the inventions disclosed herein includes the realization that once a door on an enclosed receptacle is fully open, the user can want some amount of time to elapse before the door starts closing again. This time period allows the user to place additional bags, trash, or items in the receptacle.

[0020] Thus, in accordance with at least one embodiment disclosed herein, an enclosed receptacle can comprise a receptacle portion defining a reservoir, a door mounted relative to the receptacle and configured to move between opened and closed positions, a power supply, a motor and gear assembly configured to move the door between the opened and closed positions, and a controller configured to control operation of the door. The controller can comprise a door position monitor having a top sensor configured to detect the position of the door when the door reaches a fully opened position, a fault detection module configured to stop operation of the motor and to provide an indication of a fault if the motor has been operating for more than a predetermined time period, and wherein the controller is further configured to stop the motor for a predetermined period of time when the door is at its fully open position.

[0021] Yet another aspect of at least one of the inventions disclosed herein includes the realization that users can often have multiple sets or handfuls of trash to place in an enclosed receptacle. However, once the door begins to close towards a home position, the user might have to wait until it has reached its home or fully closed position before it can be opened again. If the user suddenly wants to open the door again, or has another collection of trash to throw away while the door is closing, he or she must wait until the door has returned to its fully closed position before activating it again. In order to address this problem, an enclosed receptacle can include at least one sensor and a controller with a module. The user can activate the sensor, and the module will stop the lid from closing, reverse the direction of the motor and door, and slow the motor down such that the door will slowly begin to open again.

[0022] Thus, in accordance with at least one embodiment disclosed herein, an enclosed receptacle can comprise a receptacle portion defining a reservoir, a door mounted relative to the receptacle and configured to move between opened and closed positions, a power supply, a motor and gear assembly configured to move the door between the opened and closed positions, and a controller configured to control operation of the door. The controller can comprise at least one door movement trigger module configured to allow a user to issue a command to the controller to open the door, a door position monitor having a home sensor configured to detect when at least a portion of the motor and gear assembly reaches a fully closed position, and a fault detection module configured to stop operation of the motor and to provide an indication of a fault if the motor has been operating for more than a predetermined time period, and wherein the door movement trigger module is configured to activate a reduced motor speed and cause the door to move toward a fully open position.

BRIEF DESCRIPTION OF THE DRAWINGS

[0023] The above-mentioned and other features of the inventions disclosed herein are described below with reference to the drawings of preferred embodiments. The illustrated embodiments are intended to illustrate, but not to limit the inventions. The drawings contain the following Figures:

[0024] FIG. **1** is a top, front, and left side perspective view of an embodiment of an enclosed receptacle, with its door closed.

[0025] FIG. **2** is a left side elevational view of an embodiment of an enclosed receptacle.

[0026] FIG. **3** is an exploded top, back, and right side perspective view of an embodiment of an enclosed receptacle.

[0027] FIG. **4** is an exploded top, back, and right side perspective view of the controller and motor and gear assembly as shown in FIG. **3**.

[0028] FIG. **5** is a top, back, and left side perspective view of an embodiment of an enclosed receptacle with the door components removed.

[0029] FIG. **6** is a flow chart illustrating a control routine for controlling the actuation of sensors.

[0030] FIG. **7** is a flow chart illustrating a control routine for controlling the detection and storage of calibrated ambient light values.

[0031] FIG. **8** is a flow chart illustrating a control routine for controlling the detection of battery voltages and creating scaled motor drive values.

[0032] FIG. **9** is a flow chart illustrating a control routine for controlling the actuation of an electronic motor and gear assembly prior to reaching a pre-sensor.

[0033] FIG. **10** is a flow chart illustrating a control routine for controlling the actuation of an electronic motor and gear assembly after reaching a pre-sensor and prior to reaching a top sensor.

[0034] FIG. **11** is a flow chart illustrating a control routine for controlling the actuation of an electronic motor and gear assembly after reaching a top sensor.

[0035] FIG. **12** is a schematic diagram illustrating a control system for a trash can in accordance with an embodiment.

DETAILED DESCRIPTION OF THE PREFERRED EMBODIMENT

[0036] The embodiments of a powered system for opening and closing a lid or door of a receptacle or other device is disclosed in the context of a trash can. The inventions disclosed herein are described in the context of a trash can because they have particular utility in this context. However, the inventions disclosed herein can be used in other contexts as well, including, for example, but without limitation, large commercial trash cans, doors, windows, security gates, and other larger doors or lids, as well as doors or lids for smaller devices such as high precision scales, computer drives, etc.

[0037] With reference to FIGS. **1** and **2**, a trash can assembly **20** can include an outer shell component **22** and door **34**. Door **34** can include door components, including but not limited to door component **36**. The trash can assembly **20** can sit substantially flush with a floor, and can be of varying heights and widths depending on, among other things, consumer need, cost, and ease of manufacture.

[0038] With reference to FIG. **3**, a trash can assembly **20** can include outer shell components **22** and **24**, and an inner liner **26** configured to be retained within the outer shell components. For example, an upper peripheral edge of the outer shell component **24** can be configured to support an upper peripheral edge of inner liner **26**, such that the inner liner is suspended by its upper peripheral edge within the outer shell components **22** and **24**. Other designs can also be used.

[0039] The outer shell component **22** can assume any configuration. The non-limiting embodiment of FIG. **3** illustrates an outer shell component **22** having a generally semi-circular configuration with a rear wall **28** and a curved, front wall **30**. The inner liner can have the same general configuration, or a different configuration from the outer shell component **22**. The outer shell components **22** and **24** can be made from plastic, steel, stainless steel, aluminum or any other material.

[0040] Door components **36**, **38**, and **40** are connected to form a door **34** as shown in FIG. **1** and FIG. **5**. Door **34** has a door component **36**, which is pivotally attached to door component **38**. The pivotal connection can be defined by any type of connection allowing for pivotal movement, such as, for example, but without limitation, a hinge **50** as shown in FIG. **3**.

[0041] The trash can assembly **20** can also include a base **42**. The base **42** can include screws or other components for attachment to the outer shell component **22**, and can have a flat lower portion for resting on a surface, such as a kitchen floor. The base **42** of the trash can assembly **20** can be made integrally, monolithically, or separate from the outer shell component **22**. Thus, the base **42** can be made from any material including plastic, steel, stainless steel, aluminum or any other material. Additionally, in some embodiments, such as those in which the outer shell component **22** is stainless steel, the base **32** can be a plastic material.

[0042] The sensor (not shown) can be any type of sensor. For example, in some embodiments, the sensor is configured to detect the presence of reflecting infrared light. In such embodiments, the sensor emits infrared light at a predetermined frequency. When a user's hand or foot (or other object) moves in front of the sensor, the infrared light is reflected back. When the sensor detects reflection of the infrared light at a predetermined frequency, such as for example 2-6 Hz, for a predetermined amount of time, at which point the sensor becomes activated, and the motor begins to move the lid or door to an open position. Other frequencies can also be used, as can other types of light. Thus, the sensor can be considered a "user input device" because a user can use the sensor to issue a command to the trash can **20**.

[0043] The sensor can be coupled to a lid control system configured to control the opening and closing of the door component **36**. In one embodiment, the lid control system can include wiring provided inside the trash can connecting the sensor to a circuit board **58**. The circuit board **58**, in turn, can be coupled via wiring to a motor gear **56** that drives a rotary lifting gear **54**.

[0044] As illustrated in FIG. **4**, a motor gear assembly can include the motor gear **56** and rotary lifting gear **54**. The motor, when activated, turns the motor gear **56**, which in turn turns or rotates the rotary lifting gear **54**. The rotary lifting gear **54** can include a magnet **52** or some other releasably connecting device, along its top surface. The magnet **52** acts to releasably connect with another magnet located on the underside of door component **36**. The rotary lifting gear **54** is coupled to a hinge **50** through an elongated opening or aperture in the rotary lifting gear. The hinge **50** is also coupled to an outer housing component **60** through two openings in flanges along the upper portion of the housing component **60**, and is additionally independently coupled to the door component **36**. Thus, the rotary lifting gear **54** and door component **36** can rotate independently from one another about the hinge **50**.

[0045] In some embodiments, the motor gear **56** can be driven in two directions so that the motor gear **56** can lift or pull the door component **36** both up and down. For example, when the motor gear **56** rotates in a first direction, the rotary lift gear **54** is pushed in a generally upwards direction to push the door component **36** towards a fully open position. When the motor gear **56** rotates in an opposite second direction, the rotary lift gear **54** will move in a generally downwards direction to pull the door component **36** towards a fully closed position.

[0046] In use, the user can activate the sensor within the trash can by moving his or her hand (or other object) in front of the sensor for a predetermined period of time. Once the sensor has become activated, the motor gear **56** turns the rotary lifting gear **54**. The rotary lifting gear **56**, which is attached via its magnet to the magnet on the underside of door component **36**, pushes the door component **36** towards an open position. When the lid returns towards its closed position, the rotary lifting gear pulls down on the door component **36**. If the garbage level is too high, and the door component **36** cannot return to its normally closed position, the magnets

holding the rotary lifting gear **56** and the door component **36** will separate, allowing the motor and gear assembly to continue operating.

[0047] The controller, or circuit board **58**, is illustrated in FIG. **4** and can include a control circuit that is configured to control the operation of the motor gear **56** and the opening and closing motions of the door component **36**. The control circuit can be housed in housing components **60** and **62**, and implemented using circuit designs that are well known to those skilled in the art. For example, although indicated as a "circuit," the control circuit can comprise a processor and memory storing a control program. As such, the control program can be written to cause the processor to perform various functions for controlling the motor gear **56** in accordance with input from a sensor or sensors.

[0048] In some embodiments, a plurality of sensors can be provided in spaced-apart manner. In other words, any number (e.g., one or more) of sensors can be provided, depending on the desired use. Providing a greater number of sensors can allow the user to actuate one of the sensors more easily because the user only needs to place a hand or foot (or other object) in the direct path of any of the sensors, while providing a single sensor requires that the user place the hand or foot (or other object) in the direct path of a single sensor. The plurality of sensors can be coupled via wiring to a circuit board.

[0049] The power supply for the trash can device can comprise a battery pack, an alternating current (AC) power supply, a direct current (DC) power supply, or any combination of these or other power supplies. The power supply can be coupled both to the circuit board **58** and the motor gear **56**.

[0050] With continued reference to FIG. **5**, in some embodiments, the trash can assembly **20** can include a power switch. The power switch can comprise a physical switch, solid state switch, or any other kind of switch. In some configurations, the power switch can comprise a stationary plunger **70** mounted to the upper peripheral edge of the outer shell component **24**. As such, the switch can also include a physical electrical switch **71** (FIG. **4**) biased toward an open circuit position and connected in series with the power supply. The physical switch **71** can be arranged such that the plunger **70** contacts the physical switch **71** and closes the associated power circuit when the door **34** is placed upon the upper peripheral edge of the outer shell component **24**. As such, then the door **34** is removed from the upper peripheral edge of the outer shell component **24**, the power circuit of the trash can **20** is opened, thereby cutting power. When the door **34** is replaced, power is restored. As such, when a user removes the door **34** from the upper peripheral edge of the outer shell component **24**, the controller will not cause the lid **36** to open. Additionally, if the door **34** was removed to replace batteries, the door will lid will similarly not be opened as the new batteries are inserted. This is ensures, in some embodiments, because the physical switch **71** is disposed within the door assembly **34** and thus will not be moved into the closed position unless a small thin object is inserted into a hole (not shown) aligned with the physical switch **71**.

[0051] The modules described below with reference to FIGS. **6-11** are described in the format of flow charts representing control routines that can be executed by an ECU. However, these control routines can also be incorporated into hard-wired modules or a hybrid module including some hard-wired components and some functions performed by a microprocessor.

[0052] With reference to FIG. **6**, the control routine **100** can be used to control the actuation of the sensor. The control routine **100** is configured to periodically activate the sensor so as to reduce power consumption. In a preferred embodiment, the sensor sends out an infrared light pulse once every 0.25 seconds. Although only one sensor is referenced below, it is to be understood that any sensor or combination of sensors can be controlled to reduce power consumption.

[0053] The control routine **100** can begin operation at an operation block **102**. In the operation block **102**, the control routine **100** can be started when batteries are inserted into a battery compartment, when the power switch **71** (FIG. **4**) is moved to an "on" position, or at any other time. During the operation block **102**, the control routine initializes the hardware and variables in the controller. After the operation block **102**, the control routine **100** moves on to a decision block **104**.

[0054] In decision block **104**, the controller determines whether the door component **36** is in a home position. If the door component **36** is not in a home position, the motor gear assembly, including motor gear **56** and rotary lifting gear **54**, are activated by operation block **106** to drive the door component **36** down until it has reached a home position. The home position is determined by activation of a home sensor or sensors.

[0055] Once the door component **36** has reached a home position, the decision block **108** determines if there is any infrared reflection. A sensor, which is activated in operation block **102**, emits the infrared light in pulses. The sensor additionally monitors for reflection of the infrared light. If the infrared light is reflected back to the sensor at the same frequency with which it is being emitted (e.g. 4 Hz), for a predetermined period of time (e.g. 2 seconds), then control routine **200** is activated. If, however, there is no indication of reflected infrared light at the same frequency and for a predetermined period of time, then operation block **108** and decision block **110** continue to cycle. Operation block **110** places the controller in a sleep mode, with reduced power. During this mode, the sensor continues to emit infrared light at the predetermined frequency. The cycle of operation block **108** and decision block **110** therefore consists of emitting infrared light at a predetermined frequency while continuously checking for infrared reflection.

[0056] With reference to FIG. **7**, the control routine **200** can be used to control the detection and storage of calibrated ambient light values. Control routine **200** can begin at any time. For example, the control routine **200** can begin after the operation block **108** (FIG. **6**) or at any other time. In some embodiments, the control routine **200** can be performed whenever the power supply is activated. For example, the control routine can be performed when the physical switch **71** is closed. In some embodiments, the control routine **200** can be performed after a predetermined delay after the switch **71** has been closed.

[0057] Operation block **202** comprises a light reading step in which ambient light and/or reflections are detected and stored as calibrated values corresponding to the ambient light. These ambient light values are used by the controller to make the controller less susceptible to false detections caused by other light reflecting sources in the room, including but not limited to lamps and interior lighting. The calibrated values are thus used to help determine when a user is actually intending to actuate or operate the device, as opposed to circum-

stances in which a sensor in the trash can is detecting reflection of infrared or other light that is not intended to actuate the device.

[0058] Thus, in processes described below, the controller (such as the ECU **80** in FIG. **12**, described below) can compare the intensity of the ambient light and/or reflections stored in operation block **202** with light detected by the sensor **90** at any time after operation block **202**. If the intensity of the detected light is less than or equal to the intensity of the stored calibration values, then the controller can ignore the detection and leave the lid **36** closed. On the other hand, the controller can be configured to drive the motor **70** to open the lid **36** only if the detected light has a greater intensity than that of the stored calibration values. However, other techniques can also be used.

[0059] With reference to FIG. **8**, the control routine **300** can be used to control the detection of battery voltages and create scaled motor drive values. The control routine **300** begins once the control routine **200** has finished calibrating the ambient light values. In the operation block **302**, the controller starts the motor and begins a motion timer. This timer may initially be set to zero and allowed to run forwards towards a time limit, or set to a predetermined time and allowed to run backwards towards a time limit.

[0060] Once the motor has begun and the motion timer has been initiated, the operation block **304** delays the motor and senses the battery voltage. Often times, charge may build up on the ends of a battery through material build-up, static, etc., distorting what the actual voltage is across the terminals of the battery. As opposed to reading the voltage prior to any use of the motor, operation block **304** senses the actual voltage once the motor has begun running. This helps the controller obtain a more accurate reading of the voltage across the battery. In operation block **306**, the controller creates a scaled motor drive value based on the sensed voltage in operation block **304**. It is this scaled motor drive value which is used throughout the rest of control routines **400**, **500**, and **600**.

[0061] With reference to FIG. **9**, the control routine **400** can be used to control the actuation of an electronic motor and gear assembly prior to reaching a pre-sensor. The control routine **400** begins once control routine **300** has created a scaled motor drive value and begun to drive the motor and gear assembly. Decision block **402** determines if a pre-sensor has been reached. The pre-sensor may be any type of sensor. The pre-sensor determines or checks to see if the rotary lifting gear **54** and/or the door component **36** have reached a predetermined position on their way up towards a fully opened position. If decision block **402** indicates that the pre-sensor has not been reached or activated, or that the pre-sensor has not detected the rotary lifting gear **54** and/or door component **36**, another decision block **404** is reached. Decision block **404** checks to see if the motion timer of control routine **300** has reached a predetermined time limit.

[0062] If the motion timer has reached its predetermined time limit, operation block **406** is activated, which causes a flash fault. A flash fault detection module then stops the operation of the motor and provides an indication of fault, such as for example a flashing light somewhere on the trash can, to indicate that the controller needs to be reset or turned off prior to continued use.

[0063] If the motion timer has not reached its predetermined time limit in decision block **404**, the controller continues to loop back to decision block **402** and check for activation of the pre-sensor. Once the pre-sensor is activated, operation block **408** slows down the speed of the motor. This prevents the door from reaching its fully opened position at too rapid a speed, and prevents the motor from having to make a sudden stop.

[0064] With reference to FIG. **10**, the control routine **500** can be used to control the actuation of an electronic motor and gear assembly after reaching a pre-sensor and prior to reaching a top sensor. The control routine **500** begins once operation block **408** begins to slow down the motor. Decision block **502** determines if a top sensor has been reached. The top sensor may be any type of sensor. The top sensor determines or checks to see if the rotary lifting gear **54** and/or the door component **36** have reached a predetermined, fully open position. If the top sensor is not activated, or has not sensed that the rotary lifting gear **54** and/or door component **36** have reached their top position, a decision block **504** checks to see if a motion timer has reached a predetermined time limit. This motion timer may be the same motion timer as that of control routine **300**, or it may be a different motion timer.

[0065] If the motion timer has not reached its predetermined time limit, the control routine loops back to decision block **502**, again checking to see if the top sensor has been activated, or reached. If, however, the motion timer has reached its predetermined time limit, operation block **506** is activated, which causes a flash fault. Just as in control routine **400**, a flash fault detection module then stops the operation of the motor and provides an indication of fault, such as for example a flashing light somewhere on the trash can, to indicate that the controller needs to be reset or turned off prior to continued use.

[0066] Once decision block **502** determines that the top sensor has been activated, operation block **508** stops and delays operation of the motor for a predetermined period of time. In one embodiment, this period of time can be four seconds. Other periods of time, or delay periods, are also possible. The delay period aids the user by giving him or her extra time to place more garbage in the trash can, or to look into the trash can and observe its contents prior to the door closing.

[0067] Once the motor has been delayed for the predetermined period of time, operation block **510** starts the motor in the reverse direction, causing the rotary lifting gear **54** and/or door component **36** to move towards a fully closed position. Operation block **510** additionally begins a motion timer. The motion timer may be the same as that of control routine **300**, or it may be an entirely separate motion timer within the controller.

[0068] With reference to FIG. **11**, the control routine **600** can be used to control the actuation of an electronic motor and gear assembly after reaching a top sensor. The control routine **600** begins after operation block **508** has started the motor and motion timer. Once the rotary lifting gear **54** and/or door component **36** are moving towards a fully closed position, a decision block **602** checks to see if a home sensor has been activated, or has detected that the rotary gear **54** and/or door component **36** has reached a fully closed position. The decision block **602** also checks to see if the motion timer of control routine **500** has reached a predetermined time limit. In those uses or instances where the level of garbage is higher than the fully closed position of the door component **36**, the door component **36** may separate from the rotary lifting gear **54** while both are being lowered by the motor. This separation will prevent the door component **36** from further moving towards a fully closed position, but will still allow the rotary lifting gear **54** to continue on its path towards a fully closed position. Thus, the home sensor is still able to detect when the rotary lifting gear **54** has reached its home, or fully closed, position.

[0069] If the home sensor has not been activated, and the motion timer has reached its predetermined time limit, the operation block **604** is activated, which causes a flash fault. Just as in control routines **400** and **500**, a flash fault detection module then stops the operation of the motor and provides an indication of fault, such as for example a flashing light somewhere on the trash can, to indicate that the controller needs to be reset or turned off prior to continued use.

[0070] If the home sensor has not been activated, and the motion timer has not reached its predetermined time limit, decision block **606** begins to check for reflection of infrared light through a sensor. This sensor can be the same sensor as that of control routine **100**, or it can be an entirely different sensor. The sensor of control routine **600**, just as that of control routine **100**, emits pulses of infrared light in a predetermined frequency. If a user's hand or foot (or other object) moves in front of the sensor and reflects back the infrared light at the same frequency for a predetermined period of time (e.g. 2 seconds), operation block **608** causes the motor to reverse direction and slow down to a reduced speed. This causes the rotary lifting gear **54** and/or door component **36** to move back towards a fully open position. Often times a user can have large amounts of trash or garbage to throw away, or can become distracted while using a trash can. If the user sees that the door component **36** is closing and wants it to open again without having to wait for the door component **36** to completely close, the controller, and specifically decision block **606** and operation block **608**, allow the use to slowly reopen the door component **36**. Once operation block **608** causes the motor to reverse direction and slow down to a reduced speed, the controller reverts back to the beginning of control routine **400**.

[0071] If the decision block **606** determines that there is no reflection of infrared light at a predetermined frequency for a predetermined period of time, control routine **600** loops back to decision block **602**.

[0072] If decision block **602** determines that a home sensor has been reached and the motion timer has not reached its predetermined time limit, operation block **610** stops the motor and resets the variables in the controller. This operation block causes control routine **600** to loop back to decision block **108** in control routine **100**.

[0073] FIG. **12** schematically illustrates an embodiment of a trash can receptacle **20** that can include various features and embodiments of the inventions disclosed herein.

[0074] With continued reference to FIG. **12**, an ECU **80** can include one or a plurality of circuit boards providing a hard wired feedback control circuits, a processor and memory devices for storing and performing control routines, or any other type of controller. In an exemplary but non-limiting embodiment, the ECU **80** can include an H-bridge transistor/MOSFET hardware configuration which allows for bidirectional drive of an electric motor, and a microcontroller such as Model No. PIC16F685 commercially available from Microchip Technologies, Inc., and/or other devices.

[0075] In some embodiments, the ECU **80** can be configured to determine when a lid component reaches its maximum open position based on the signal from a top sensor **94**. For example, but without limitation, the ECU **80** can be configured to count the number of pulses it receives from the sensor **94**, each pulse representing one tooth of an encoder wheel passing the sensor **94**, to determine the number of rotations of a motor shaft or motor gear from the beginning of the actuation of the electric motor **70**. The number of pulses generated by the movement of the lid component from the closed position to the open position can be determined and stored within the ECU **80** as a reference value. Thus, the ECU **80** can count the pulses from the beginning of the actuation of the motor and then stop the motor when the ECU **80** receives the stored number of pulses from the top sensor **94**.

[0076] The ECU can similarly be configured to determine when the lid component has reached a pre-sensor **92**, the pre-sensor **92** being at an intermediate position between a fully closed position and a fully opened position.

[0077] The ECU **80** can be configured to perform in a number of different ways. For example, the ECU **80** can be configured to open and close the lid component in accordance with the description set forth above. However, the ECU **80** can be programmed to open the lid component **72** in other manners.

[0078] When closing the lid component **72**, the ECU **80** can also rely on the output of the home sensor **96** to determine when the rotary gear **86** and/or lid component **72** has reached its closed position. However, the ECU **80** can optionally be configured to detect an output from the home sensor **96** for determining when the rotary gear and/or lid component **72** is closed. Thus, for example, when the ECU **200** drives the motor gear **70** to close the rotary gear and/or lid component **72**, the ECU **200** can continue to provide power to the motor until a detection signal is received from the home sensor **96**. At that time, the ECU **80** can stop directing power to the motor because the signal from the home sensor **96** indicates the rotary gear and/or lid component **72** is closed.

[0079] This provides a further recalibration of the ECU **80** each time the lid rotary gear and/or lid component **72** is closed. For example, because the ECU **80** is not relying solely on the output of the home sensor **96** and the proper rotation of the encoder wheel, errors associated with the encoder wheel can be avoided.

[0080] The ECU can further be configured to read ambient light values and store the calibrated values. These stored values can be used by the ECU to prevent false triggering of the sensor **90**. For example, in some embodiments the ECU can detect whether the light being received by sensor **90** is the same infrared light that was emitted by sensor **90**, as opposed to merely ambient light from the surrounding environment.

[0081] The trash can receptacle can include an actuator or motor **70**. The actuator can be any type of actuator. For example, but without limitation, the actuator can be an AC or DC electric motor, stepper motor, server motor, solenoid, stepper solenoid, or any other type of actuator. Optionally, the actuator can be connected to the lid component **72** through a motor gear, rotary gear, and magnet. The magnet can be releasably coupled to the lid component **72**. The motor gear can be, for example, a worm gear.

[0082] In some embodiments, a sensor device **90** can include an infrared type sensor. For example, as illustrated in FIG. **12**, the sensor **90** can include a light emitting portion and a light receiving portion. The light emitting and light receiving portions can be separate, or in some embodiments they can be part of the same device. Thus, in use, a beam of infrared light can be emitted from the light emitting portion and reflected back and received by the light receiving portion. This reflection occurs as a result of the user placing his or her hand or some object in front of the infrared sensor and reflecting back the emitted infrared light for a predetermined period of time at a predetermined frequency.

[0083] The sensor **90** can be configured to emit a trigger signal when the infrared light beam is reflected back to the light receiving portion. For example, if the sensor **90** is activated and the light receiving portion receives the reflected infrared light emitted from the light emitting portion, then the sensor **90** can emit a trigger signal. This trigger signal can be used for controlling operation of the motor or actuator **70**.

[0084] The sensor **90** can be operated in a pulsating mode. For example, the light emitting portion can be powered on and off in a cycle such as, for example, but without limitation, for short bursts lasting for any desired period of time (e.g., 0.01 second, 0.1 second, 1 second) at any desired frequency (e.g., once per half second, once per second, once per ten seconds). These different time characteristics can be referred to as an activation period or frequency, which corresponds to the periodic activation of the sensor **90**. Thus, an activation frequency of four times per second would be equivalent to an activation period of once per quarter second.

[0085] The sensor **90** can be connected to a circuit board, an integrated circuit, or other device for triggering the actuator. In the illustrated embodiment of FIG. **13**, the sensor **90** is connected to the ECU **80**. However, other arrangements can also be used.

[0086] The trash can receptacle **20** can also include a power supply **78**. The power supply **78** can be a battery or can include electronics for accepting AC or DC power.

[0087] In operation, the ECU **80** can activate the sensor **90**, continuously or periodically, to detect the presence of an object in front of sensor **90**. When an object blocks the infrared light beam and reflects the infrared light back, the ECU **80** determines that a lid opening cycle should begin. The ECU **80** can then actuate the actuator to drive the rotary gear and/or lid component **72** towards a fully opened position.

[0088] The trash can receptacle **20** can also include a pre-sensor **92**, top sensor **94**, and home sensor **96** as described above. The ECU **80** can communicate with the pre-sensor, top sensor, and home sensor to determine the position of the rotary gear and/or lid component **72**.

[0089] Although these inventions have been disclosed in the context of certain preferred embodiments and examples, it will be understood by those skilled in the art that the present inventions extend beyond the specifically disclosed embodiments to other alternative embodiments and/or uses of the inventions and obvious modifications and equivalents thereof. In addition, while several variations of the inventions have been shown and described in detail, other modifications, which are within the scope of these inventions, will be readily apparent to those of skill in the art based upon this disclosure. It is also contemplated that various combinations or subcombinations of the specific features and aspects of the embodiments may be made and still fall within the scope of the inventions. It should be understood that various features and aspects of the disclosed embodiments can be combined with or substituted for one another in order to form varying modes of the disclosed inventions. Thus, it is intended that the scope of at least some of the present inventions herein disclosed should not be limited by the particular disclosed embodiments described above.

What is claimed is:

1. An enclosed receptacle comprising:

a receptacle portion defining a reservoir;

a door mounted relative to the receptacle and configured to move between opened and closed positions;

a power supply;

a motor and gear assembly configured to move the door between the opened and closed positions, at least a portion of the motor and gear assembly configured to be releasably coupled to the door;

a controller configured to control operation of the door, the controller comprising:

at least one door movement trigger module configured to allow a user to issue a command to the controller to open the door;

a light read module configured to read and stores calibrated values corresponding to ambient light;

a power supply sense module configured to sense a power supply voltage and create a scaled motor drive value;

a door position monitor having a pre-sensor, top sensor, and home sensor configured to monitor positions of the motor and gear assembly and door;

a braking module configured to slow the movement of the door after the door has reached one of the at least one sensors; and

at least one fault detection module configured to stop operation of the motor and to provide an indication of a fault if the motor has been operating for more than a predetermined time period.

2. An enclosed receptacle comprising:

a receptacle portion defining a reservoir;

a door mounted relative to the receptacle and configured to move between opened and closed positions;

a power supply; and

a motor and gear assembly configured to move the door between the opened and closed positions, at least a portion of the motor and gear assembly configured to be releasably coupled to the door.

3. The receptacle according to claim **2**, wherein the motor and gear assembly includes a worm gear.

4. The receptacle according to claim **2**, wherein the motor and gear assembly is separately hinged from the door.

5. The receptacle according to claim **2**, wherein a magnet is located on both the door and a portion the motor and gear assembly, the magnets configured to releasably hold the door to at least a portion of the motor and gear assembly.

6. The receptacle according to claim **5**, wherein the magnets are configured to release from one another if the door is restrained from moving toward a fully closed position.

7. An enclosed receptacle comprising:

a receptacle portion defining a reservoir;

a door mounted relative to the receptacle and configured to move between opened and closed positions;

a power supply;

a motor and gear assembly configured to move the door between the opened and closed positions;

a controller configured to control operation of the door, the controller comprising at least one door movement trigger module configured to allow a user to issue a command to the controller to open the door; and

wherein at least one of the door movement trigger modules comprises a light emitter device and a light receiver device, the door movement trigger module being triggered when the light receiver device detects a given frequency of reflected light for a specified period of time.

8. The receptacle according to claim **7**, wherein the light emitted is infrared light.

9. An enclosed receptacle comprising:

a receptacle portion defining a reservoir;

a door mounted relative to the receptacle and configured to move between opened and closed positions;

a power supply;

a motor and gear assembly configured to move the door between the opened and closed positions; and

a controller configured to control operation of the door, the controller comprising a light read module configured to read and store calibrated values corresponding to ambient light.

10. The receptacle according to claim **9**, further comprising a power supply sense module configured to sense a power supply voltage and create a scaled motor drive value, wherein the light read module calibrates and stores ambient light values prior to the power supply sense module sensing a power supply voltage.

11. The receptacle according to claim **9**, wherein the controller is configured to use the stored calibrated values to prevent false triggering of a door movement trigger module.

12. An enclosed receptacle comprising:

a receptacle portion defining a reservoir;

a door mounted relative to the receptacle and configured to move between opened and closed positions;

a power supply;

a motor and gear assembly configured to move the door between the opened and closed positions; and

a controller configured to control operation of the door, the controller comprising a power supply sense module configured to sense a power supply voltage and create a scaled motor drive value.

13. The receptacle according to claim **12**, wherein the controller is further configured to start the motor and set a motion timer;

14. The receptacle according to claim **12**, wherein the power supply module is configured first to place a load on the power supply, and then to sense a power supply voltage.

15. An enclosed receptacle comprising:

a receptacle portion defining a reservoir;

a door mounted relative to the receptacle and configured to move between opened and closed positions;

a power supply;

a motor and gear assembly configured to move the door between the opened and closed positions;

a controller configured to control operation of the door, the controller comprising:

a door position monitor having a pre-sensor configured to detect when at least a portion of the motor and gear assembly has reached a predetermined position prior to a fully opened position;

a braking module configured to slow the movement of the door after the door has reached the pre-sensor; and

a fault detection module configured to stop operation of the motor and to provide an indication of a fault if the motor has been operating for more than a predetermined time period.

16. The receptacle of claim **15**, wherein the controller further comprises a motion timer, the motion timer configured to detect the predetermined period of time.

17. An enclosed receptacle comprising:

a receptacle portion defining a reservoir;

a door mounted relative to the receptacle and configured to move between opened and closed positions;

a power supply;

a motor and gear assembly configured to move the door between the opened and closed positions;

a controller configured to control operation of the door, the controller comprising:

a door position monitor having a top sensor configured to detect the position of the door when the door reaches a fully opened position;

a fault detection module configured to stop operation of the motor and to provide an indication of a fault if the motor has been operating for more than a predetermined time period;

wherein the controller is configured to stop the motor for a predetermined period of time when the door is at a fully opened position; and

wherein the controller is configured to begin downward movement of the door.

18. The receptacle of claim **17**, wherein the controller further comprises a motion timer, the motion timer configured to detect the predetermined period of time.

19. An enclosed receptacle comprising:

a receptacle portion defining a reservoir;

a door mounted relative to the receptacle and configured to move between opened and closed positions;

a power supply;

a motor and gear assembly configured to move the door between the opened and closed positions;

a controller configured to control operation of the door, the controller comprising:

at least one door movement trigger module configured to allow a user to issue a command to the controller to open the door when the door is moving towards a fully closed position.

a door position monitor having a home sensor configured to detect when at least a portion of the motor and gear assembly reaches a fully closed position; and

a fault detection module configured to stop operation of the motor and to provide an indication of a fault if the motor has been operating for more than a predetermined time period; and

wherein the at least one door movement trigger module is configured to activate a reduced motor speed and cause the door to move toward a fully open position.

20. The receptacle of claim **19**, wherein the door movement trigger module comprises a light emitter device and a light receiver device, the door movement trigger module being triggered when the light receiver device detects a given frequency of reflected light for a specified period of time.

21. The receptacle of claim **19**, wherein the controller is configured to stop the motor and reset when the home sensor is activated.

22. The receptacle of claim **19**, wherein the fault detection module is configured to stop the operation of the motor if the home sensor has not detected that at least a portion of the motor and gear assembly has reached a fully closed position before a predetermined period of time has elapsed.

23. The receptacle of claim **19**, wherein the controller further comprises a motion timer, the motion timer configured to detect the predetermined period of time.

* * * * *