US006152647A

United States Patent [19]

Tapio et al.

[11] **Patent Number: 6,152,647**

[45] **Date of Patent: Nov. 28, 2000**

[54] **SCREEDING METHOD INCORPORATING OSCILLATING MEMBER**

[75] Inventors: **John A. Tapio**; **Nels D. Tapio**; **Kyle J. Tapio**, all of Brush Prairie, Wash.

[73] Assignee: **Delaware Capital Formation, Inc.**, Wilmington, Del.

[21] Appl. No.: **09/385,266**

[22] Filed: **Aug. 30, 1999**

Related U.S. Application Data

[62] Division of application No. 09/052,193, Mar. 31, 1998.

[51] **Int. Cl.**[7] **E01C 19/40**

[52] **U.S. Cl.** **404/75**; 404/120; 404/84.5

[58] **Field of Search** 404/84.05, 84.1, 404/84.5, 84.8, 101, 102, 114, 120, 72, 75, 105

[56] **References Cited**

U.S. PATENT DOCUMENTS

1,033,872	7/1912	Burwell .	
1,677,877	7/1928	Carr .	
1,782,707	11/1930	Bayley .	
2,094,910	10/1937	Baily	94/48
2,219,246	10/1940	Jackson	94/45
2,322,362	6/1943	Jackson	94/45
2,346,378	4/1944	Jackson	94/48
2,346,379	4/1944	Jackson	94/24
2,358,085	9/1944	Millikin et al.	94/45
2,426,702	9/1947	Millikin et al.	94/45
2,473,961	6/1949	Mandt et al.	94/45
2,511,589	6/1950	Jaeger	94/45
2,566,481	9/1951	Buell	94/45
2,847,917	8/1958	Heer et al.	94/46
2,947,230	8/1960	Heer et al.	94/46
2,962,949	12/1960	O'Dea	94/45
3,051,062	8/1962	Apel et al.	94/45
3,088,384	5/1963	Heer et al.	94/46
3,147,678	9/1964	Lewis	94/45
3,221,618	12/1965	Hudis	94/45
3,247,770	4/1966	Perkins et al.	94/45
3,252,390	5/1966	Martinson	94/45
3,294,001	12/1966	Thomson	94/45

(List continued on next page.)

FOREIGN PATENT DOCUMENTS

0102060	5/1985	European Pat. Off. .
2555216A1	6/1977	Germany .
3623570	1/1988	Germany .
53878	2/1943	Netherlands .
9401774	6/1996	Netherlands .
332662	7/1930	United Kingdom .
909194	10/1962	United Kingdom .
1182385	2/1970	United Kingdom .

OTHER PUBLICATIONS

SCRR–EED™concrete screed attachment by Van–Boh Systems, Inc. brochure, dated Jan. 1998.

"Are you tired of screeding concrete this way?", SCREED KING® TSK 308 brochure, published more than one year prior to the filing date of the present application.

Primary Examiner—James A. Lisehora

Attorney, Agent, or Firm—Van Dyke, Gardner, Linn & Burkhart, LLP

[57] **ABSTRACT**

A screeding assembly and method is disclosed for spreading, grading, consolidating and smoothing loose or plastic material such as poured, uncured concrete when the assembly moved over an area of the material. The assembly includes a rotatable auger to move the material laterally across the path of travel, a vibratory screed positioned behind the auger to smooth and finish the material, and an elongated engaging member reciprocated laterally across the path at a position between the auger and vibratory screed to facilitate consolidation of the material. Preferably, a plow/striker is positioned in front of the auger to and remove excess material. The assembly may be mounted on a self-propelled vehicle or other support on a boom for moving the assembly over the material, and is preferably controlled by a laser beam responsive elevation control. A kit for attaching the reciprocating engaging member to an existing screed assembly is also provided.

19 Claims, 9 Drawing Sheets

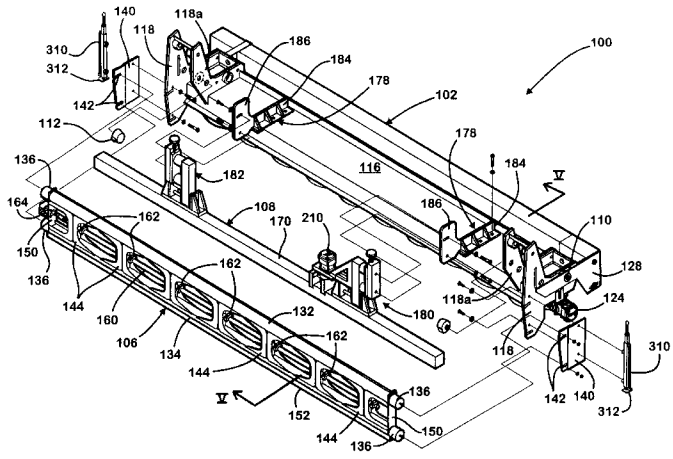

U.S. PATENT DOCUMENTS

3,377,933	4/1968	Dale	94/45
3,435,740	4/1969	McGall	94/45
3,533,337	10/1970	Swisher, et al.	94/46
3,602,112	8/1971	Burks	94/44
3,604,325	9/1971	Borges	94/45
3,638,539	2/1972	Lewis	94/44
3,838,933	10/1974	Lehman et al.	404/114
3,850,541	11/1974	Baillet et al.	404/114
3,870,427	3/1975	Allen	404/103
3,970,405	7/1976	Swisher, Jr. et al.	404/105
4,073,592	2/1978	Godberson et al.	404/89
4,253,778	3/1981	Morrison	404/114
4,371,287	2/1983	Johansson	404/84
4,465,397	8/1984	Hollon et al.	404/84
4,466,757	8/1984	Allen	404/114
4,484,834	11/1984	Rowe et al.	404/84
4,493,585	1/1985	Axer	404/102
4,507,015	3/1985	Furukawa et al.	404/103
4,655,633	4/1987	Somero et al.	404/75
4,700,786	10/1987	Berry	172/799
4,930,935	6/1990	Quenzi et al.	404/75
4,978,246	12/1990	Quenzi et al.	404/84
5,009,544	4/1991	Chaize	404/72
5,039,249	8/1991	Hansen et al.	404/84
5,156,487	10/1992	Haid	404/72
5,222,829	6/1993	Mogler et al.	404/118
5,224,793	7/1993	De Pol et al.	404/119
5,366,320	11/1994	Hanlon et al.	404/118

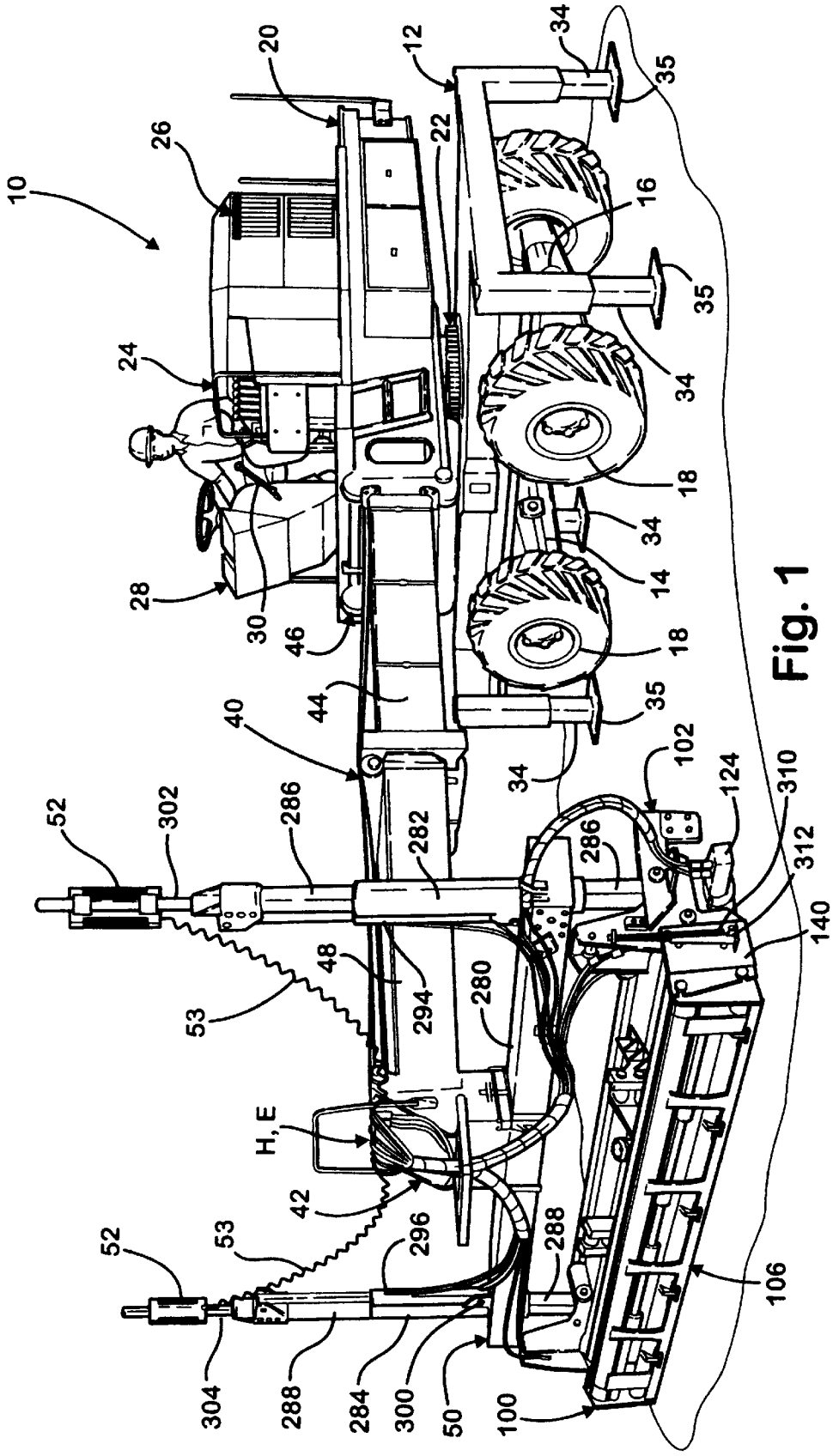
10
20
12
34
35
26
22
16
35
24
34
18
34
14
28
30
46
18
44
35
40
34
102
124
310
52
302
286
282
286
312
140
48
294
280
53
H, E
42
52
53
296
288
106
304
288
284
300
50
100

Fig. 1

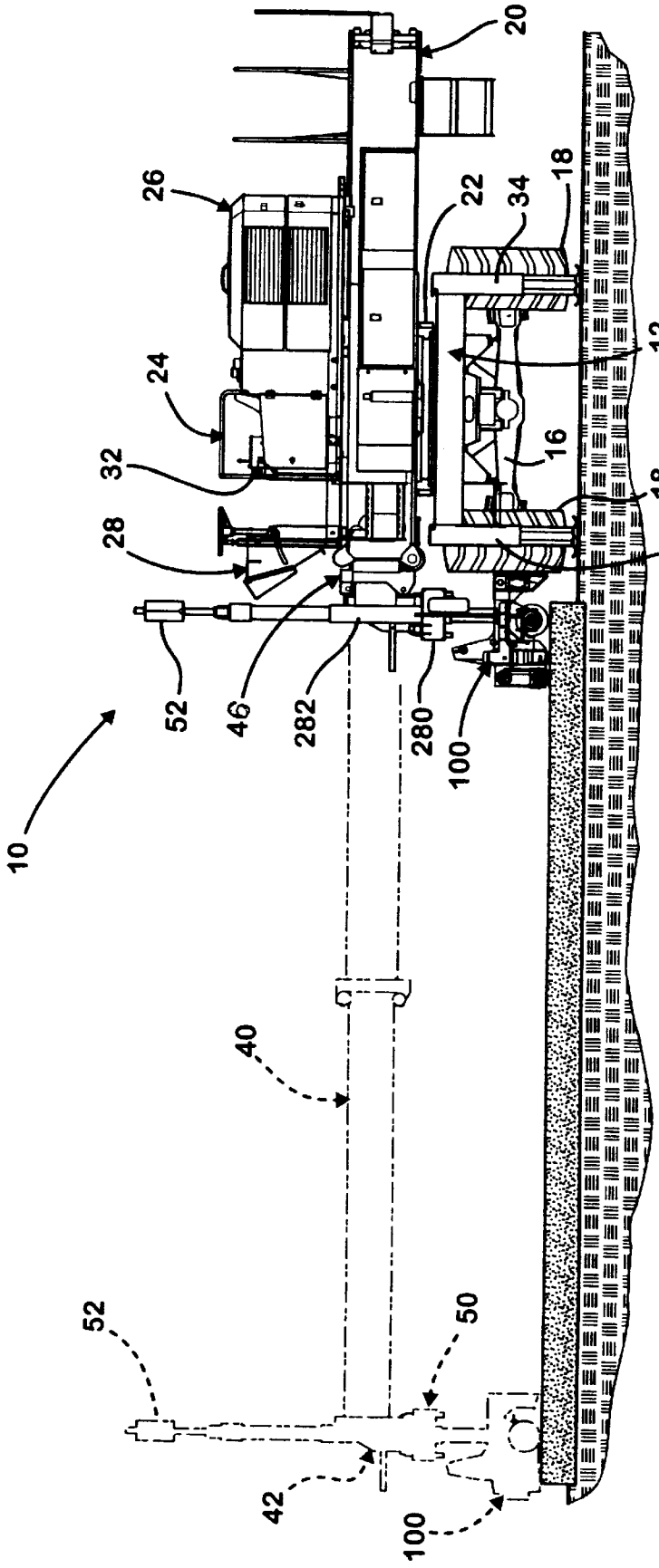
20
26
22
34
18
12
24
16
32
18
28
34
52
46
282
280
100
10
40
52
50
42
100

Fig. 2

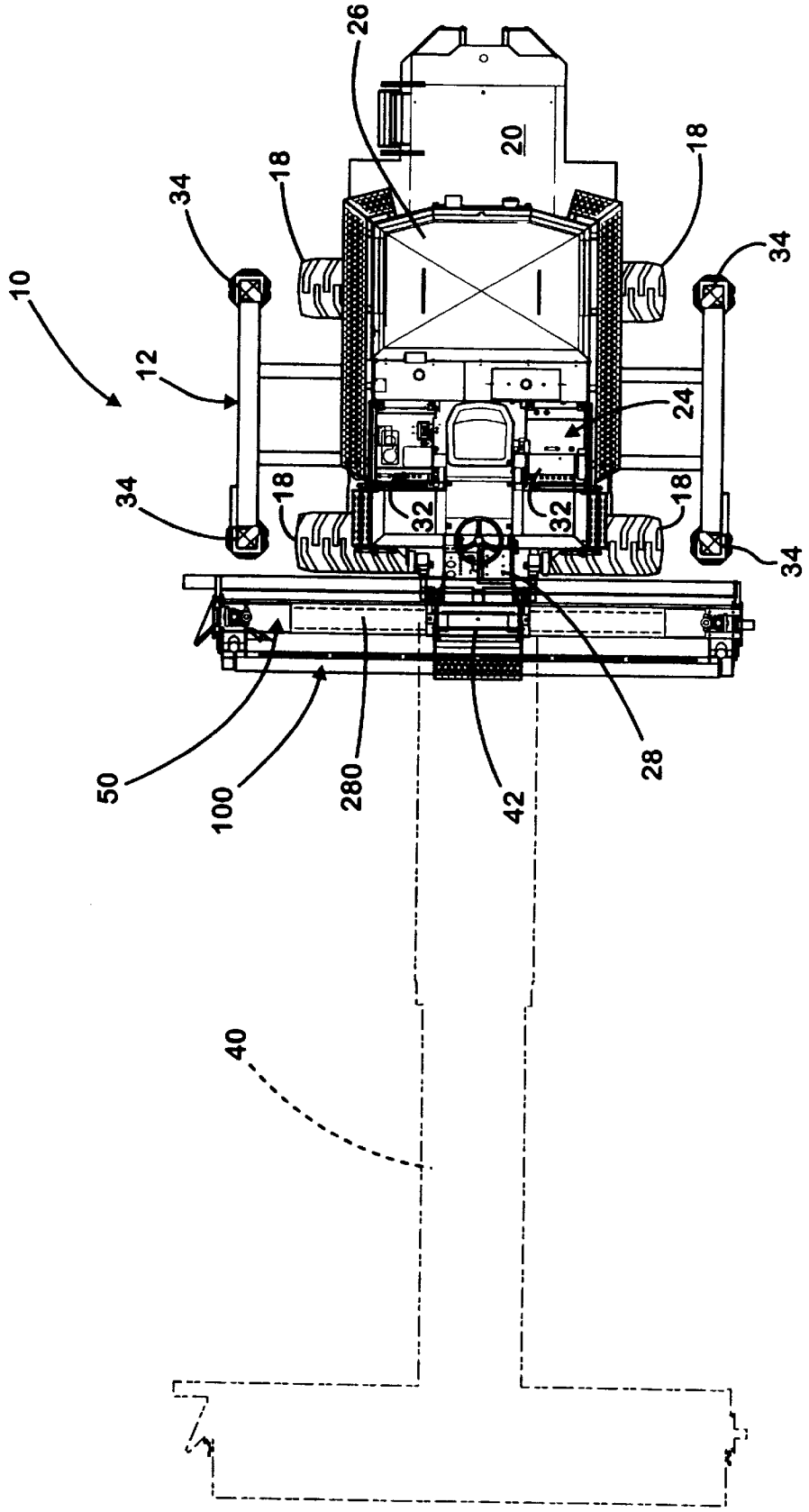

Fig. 3

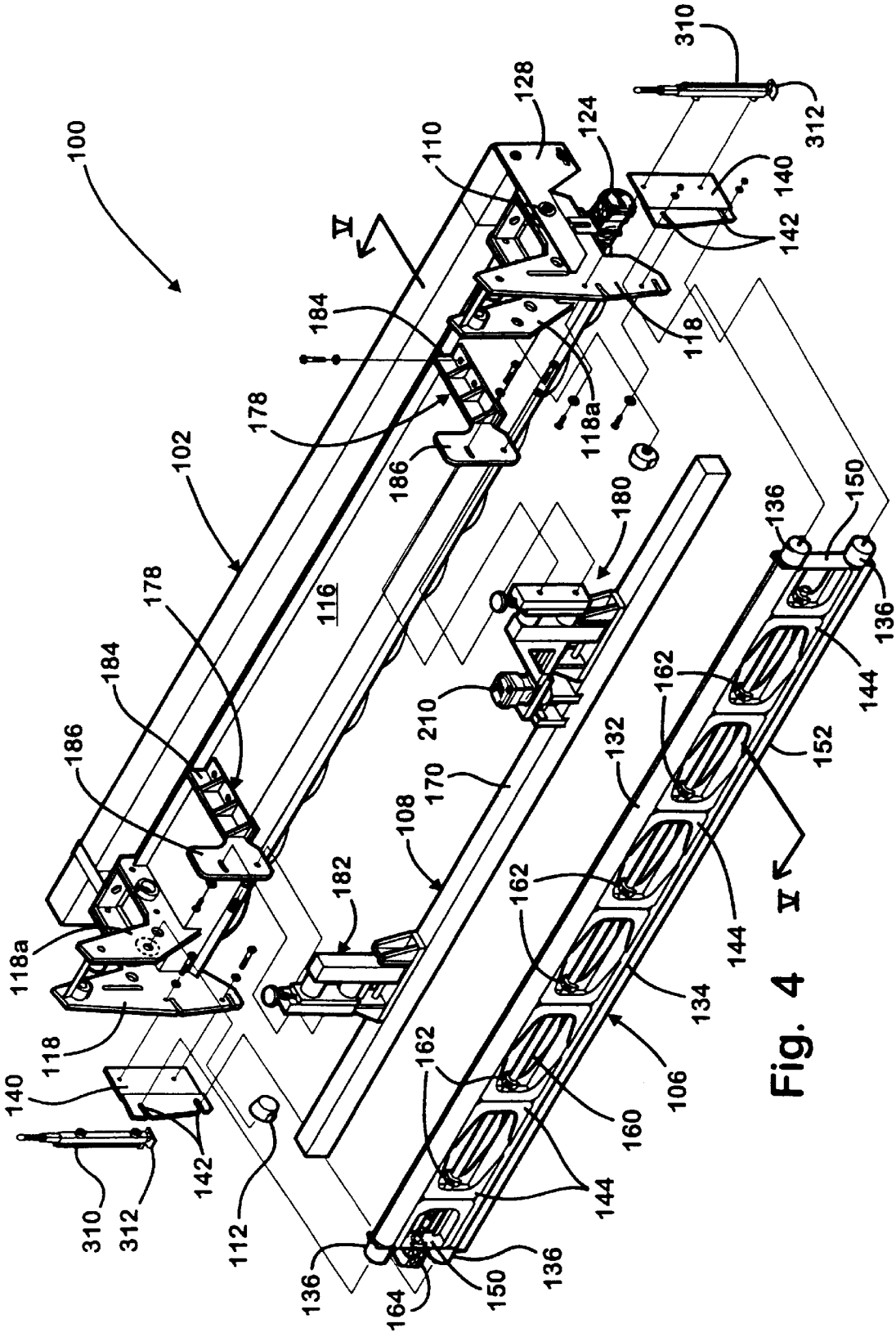
100
102
116
108
106
110
112
118
118a
124
128
132
134
136
140
142
144
150
152
160
162
164
170
178
180
182
184
186
210
310
312
V

Fig. 4

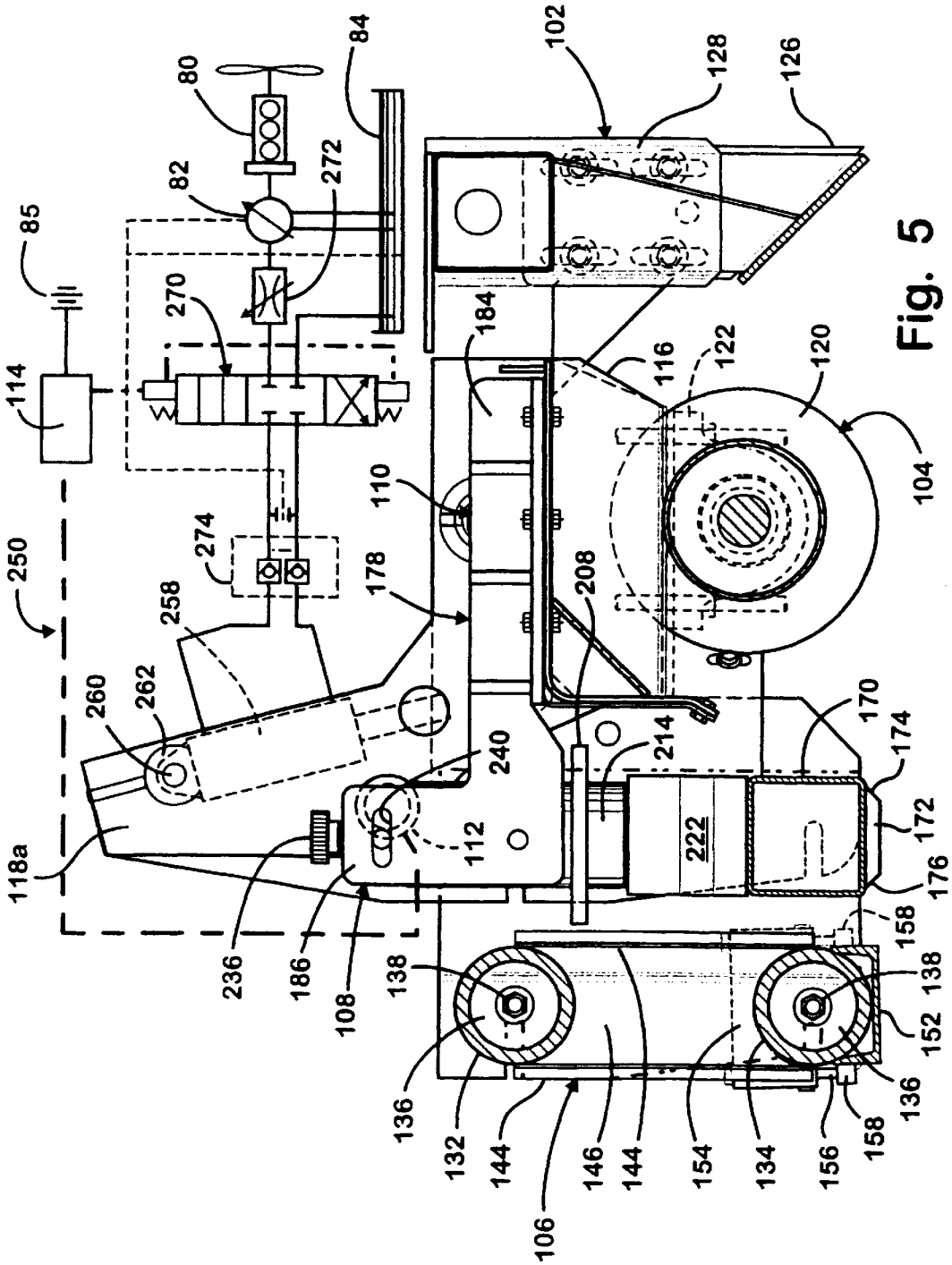
102
128
126
84
80
82
272
85
270
114
250
274
258
260
262
118a
236
186
108
138
136
132
144
106
146
144
154
134
156
158
136
152
138
158
176
172
174
170
222
214
208
240
112
178
110
184
116
122
120
104

Fig. 5

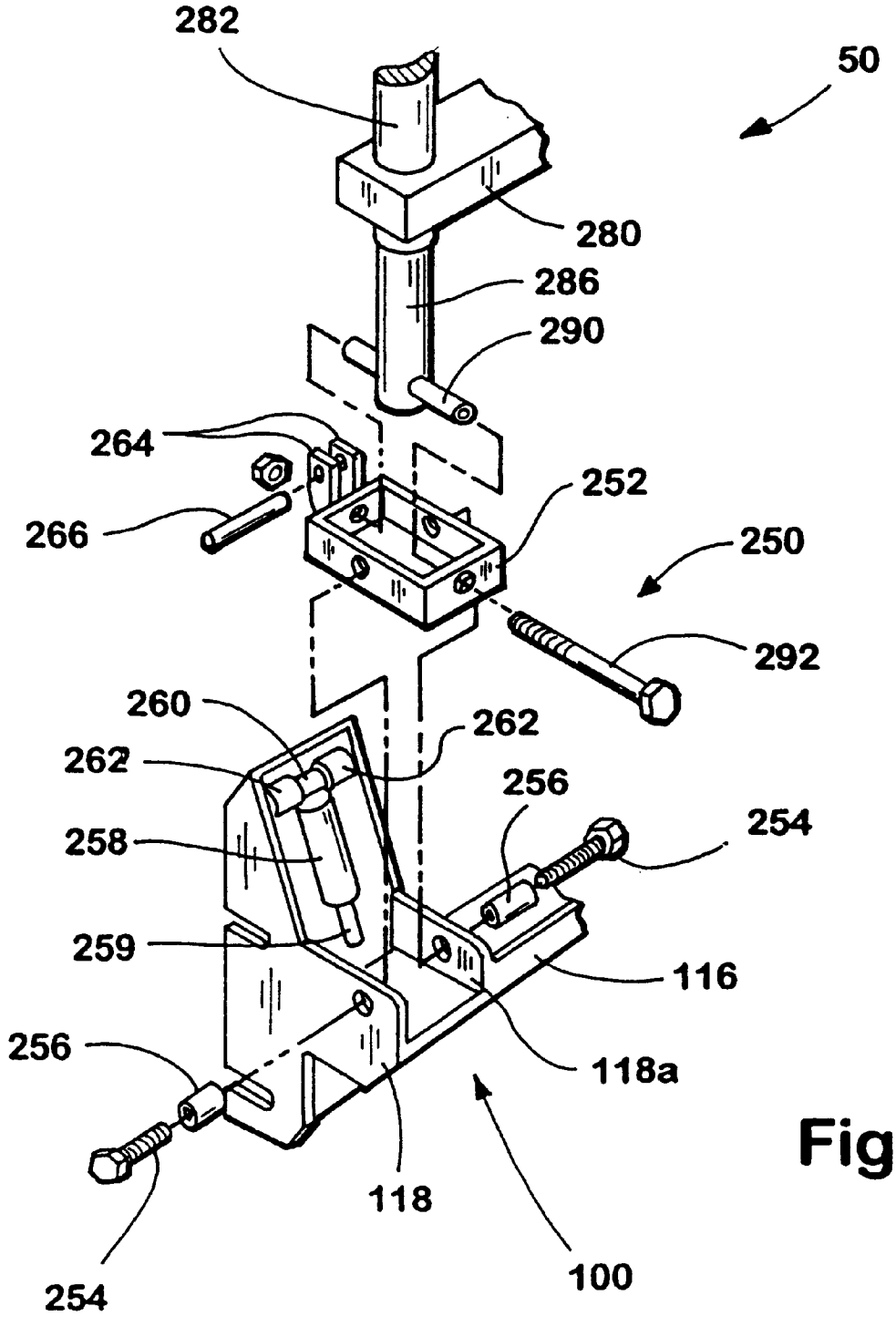
282
50
280
286
290
264
252
266
250
292
260
262
262
256
258
254
259
116
256
118a
118
100
254

Fig. 6

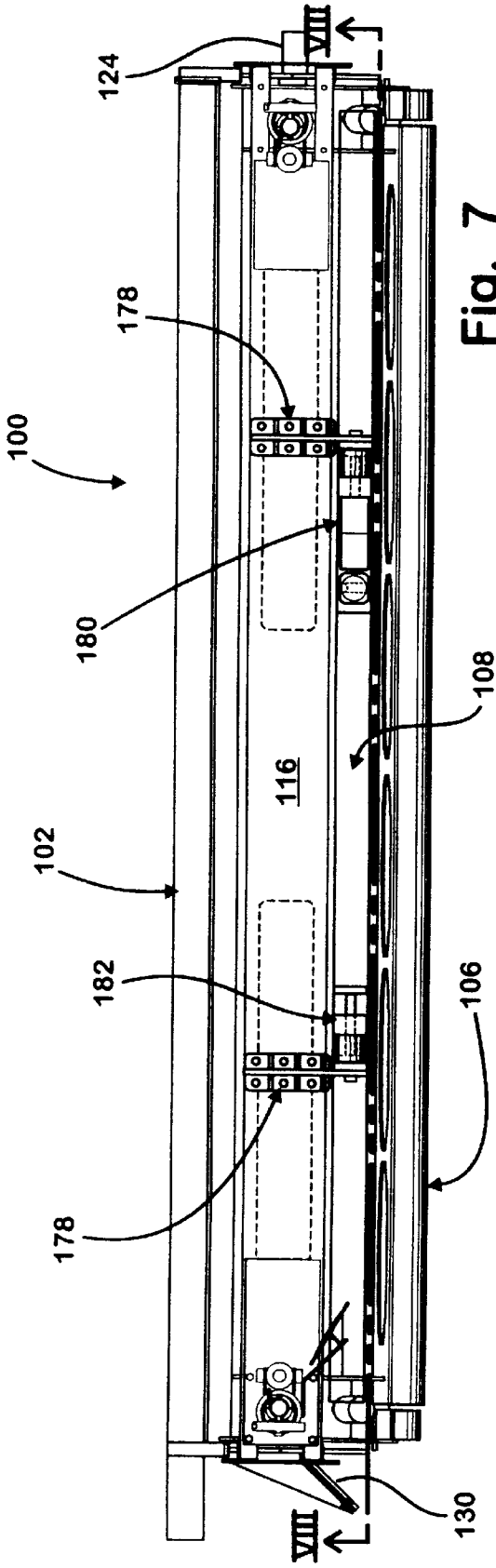
124
VIII
178
100
180
108
116
102
182
106
178
130
VIII

Fig. 7

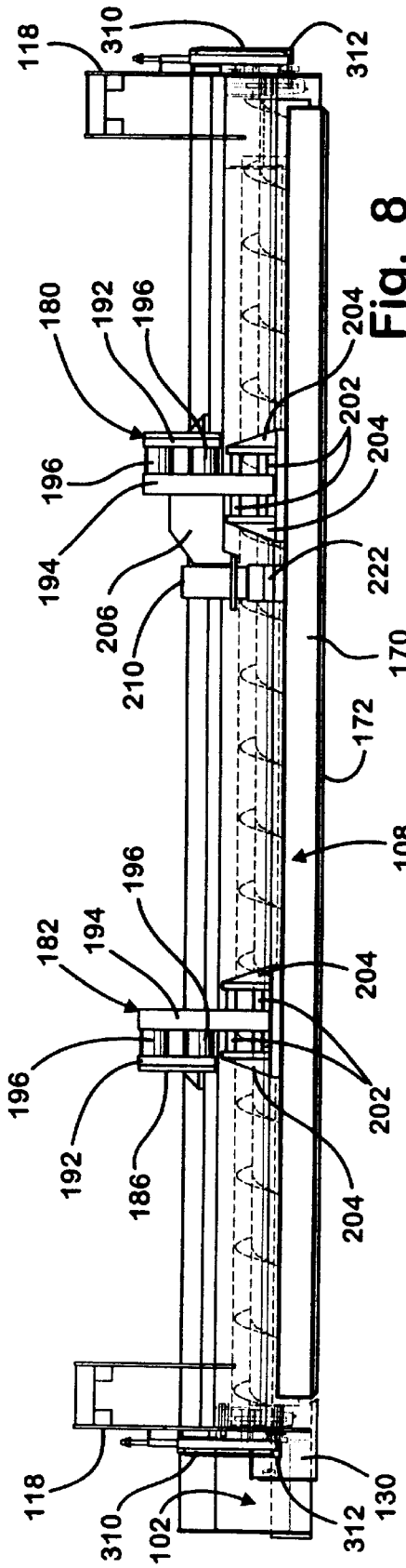
118
310
312
180
192
196
204
202
204
196
194
222
206
210
170
172
108
196
182
194
204
196
202
192
186
204
118
310
102
312
130

Fig. 8

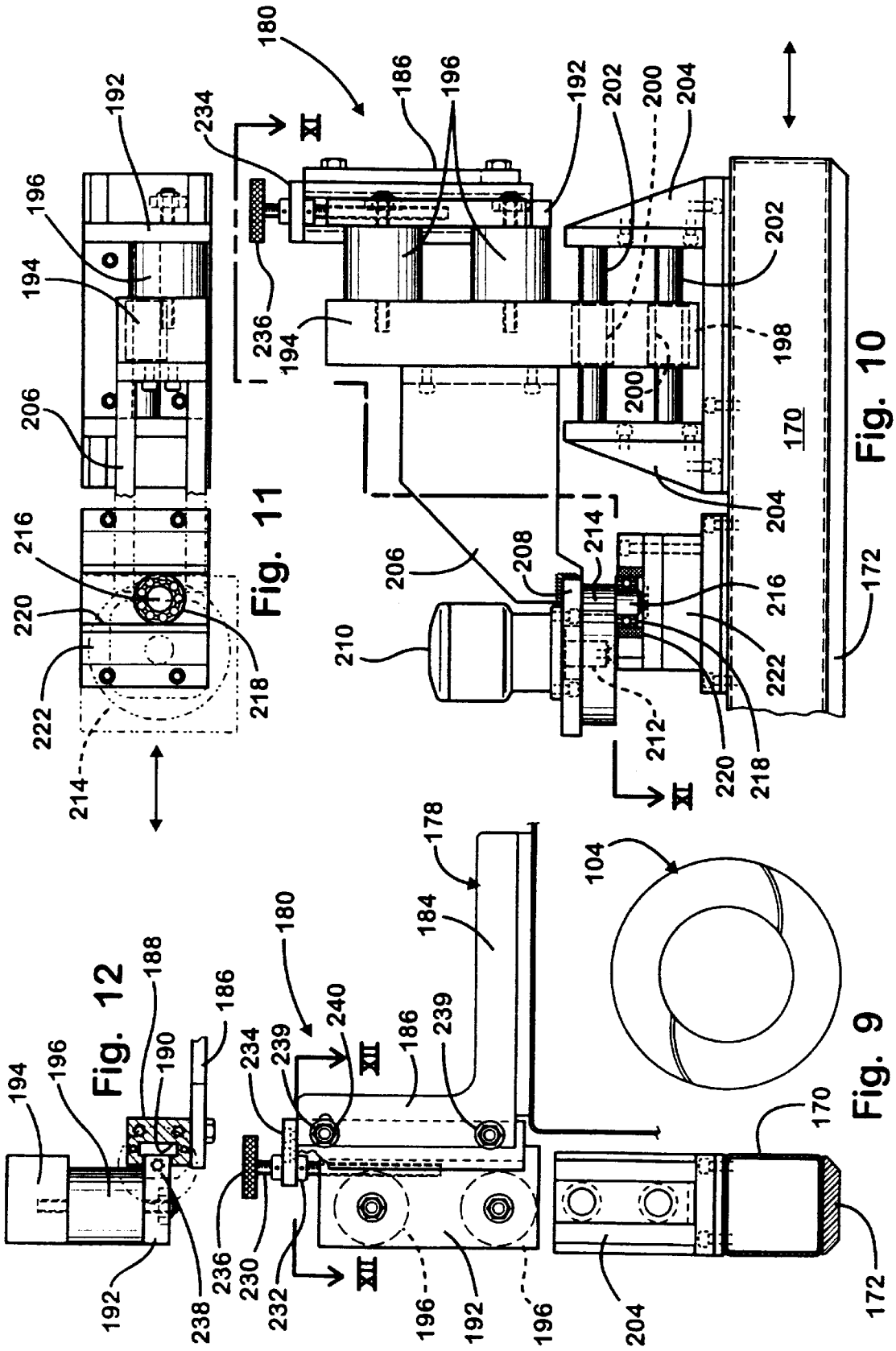
Fig. 11
Fig. 10
Fig. 12
Fig. 9
XI
XII
170
172
178
180
184
186
188
190
192
194
196
198
200
202
204
206
208
210
212
214
216
218
220
222
230
232
234
236
238
239
240
104

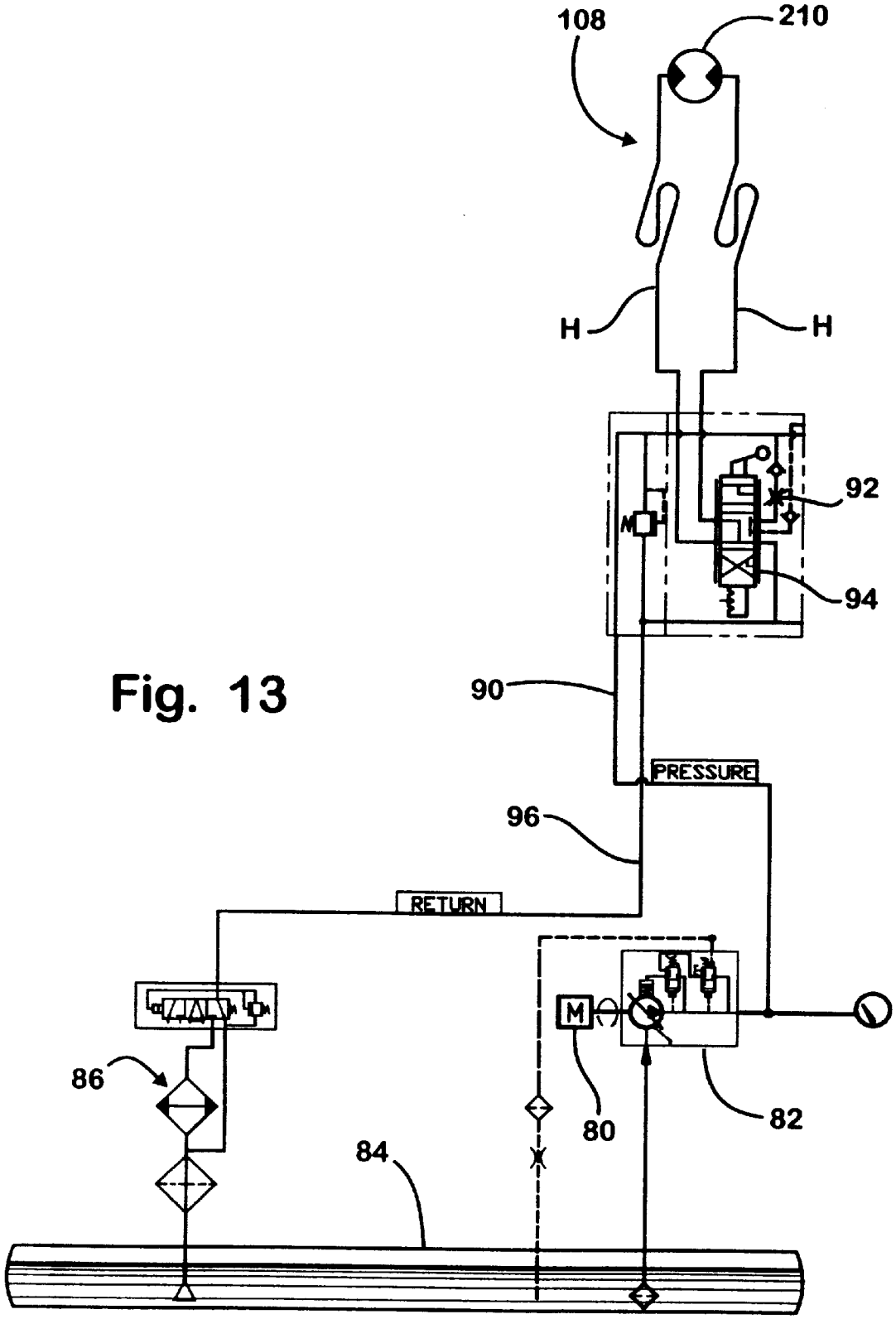

Fig. 13

SCREEDING METHOD INCORPORATING OSCILLATING MEMBER

CROSS REFERENCE TO RELATED APPLICATION

This is a division of Ser. No. 09/052,193, filed Mar. 31, 1998, by John A. Tapio, Nels D. Tapio, and Kyle J. Tapio, entitled SCREEDING APPARATUS AND METHOD INCORPORATING OSCILLATING ATTACHMENT, the disclosure of which is hereby incorporated by reference herein.

BACKGROUND OF THE INVENTION

This invention relates to methods and machines for screeding, that is, spreading, distributing, grading and smoothing and/or leveling placed and/or poured, uncured concrete or like loose, spreadable material such as sand, gravel or relatively viscous, fluid materials. More particularly, the invention concerns an apparatus and method for screeding such materials without the need for pre-positioned rails or guides, especially rail guided paving and screeding machines such as slip form pavers. The invention is an improvement of an earlier apparatus and method for screeding such materials with a device which is supported above and moved along an area of such loose or plastic material like uncured concrete.

The present invention is an improved version of the screeding apparatus and methods of U.S. Pat. Nos. 4,930,935 and 4,655,633, both of which are assigned to the assignees of the present invention. In the device and method of U.S. Pat. No. 4,930,935, a self-propelled apparatus includes a steerable, self-propelled frame, a cantilevered boom, and an auger-type, vibratory screed having a strike-off member for engaging the concrete prior to engagement by the auger while the vibratory screed smooths the concrete after engagement by the auger. The elevation of the screed is adjusted automatically by a screed control assembly relative to a laser beacon reference plane positioned off of and remote from the apparatus such that the finished height of the concrete or other material is accurately controlled within close tolerances.

During use of the vibratory screed of U.S. Pat. No. 4,930,935, it was found that with certain types of materials, and especially stiffer or partially set concrete, or large aggregate concrete, the screed assembly of U.S. Pat. No. 4,930,935 encountered difficulties in closing all voids and openings in the concrete and producing the same high quality finished surface while operating at a normal screeding speed. Specifically, with concrete which had partially setup or was held in a concrete delivery truck for too long a time, or was placed in a thinner layer such as low slump two or three inch thick layers, or included large size stone or aggregate in the mixture, the screeding apparatus of U.S. Pat. No. 4,930,935 was required to labor more and be moved over the surface of the poured concrete more slowly in order to produce the same quality finished surface. Particularly when aggregate of large size was used in such concrete, unless the screed assembly was operated at a slower rate of movement, voids in the surface of the concrete were not fully closed. Accordingly, in such situations, the square footage area of concrete which could be finished and screeded in a given work period was reduced because of such slower operating speed. Completion of projects was, thus, delayed while the expense of concrete finishing was increased.

Accordingly, the present invention was devised to improve the screeding and/or finishing of material such as poured, uncured concrete and especially stiffer concrete which is low slump, large aggregate, or partially set, by including an additional oscillating/reciprocating element to better consolidate the concrete being worked at normal screeding speeds while eliminating voids and openings, and thereby provide a smooth high quality, properly finished surface.

SUMMARY OF THE INVENTION

The present invention is an improved screeding apparatus and method for spreading, distributing, smoothing, leveling and/or grading placed and/or poured, uncured concrete or like loose, spreadable, viscous fluid or plastic materials on the ground or on suspended decks, parking structures or other surfaces to allow finishing of the concrete or other material at normal screeding speeds and without the use of large, slip formed pavers or other apparatus requiring the use of preset guides or rails. More particularly, the present invention is adapted to allow screeding at normal speeds even when finishing stiffer concrete such as low slump, large aggregate, or partially set concrete which otherwise would incorporate significant voids or openings.

In one aspect, the invention is a screeding assembly for uncured concrete or other material adapted to be supported and moved along a path in a predetermined direction over an area of the material to be screeded. The assembly includes a support, an elongated, rotatable auger having an axis of rotation generally transverse to the predetermined direction and mounted on the support to move the material laterally of the predetermined direction and grade the material, and a vibratory screed mounted on the support and positioned behind the auger with respect to the predetermined direction to smooth the material. An elongated engaging member is mounted on the support and positioned intermediate the auger and the vibratory screed to engage and smooth the material. An oscillating assembly reciprocates the engaging member in a direction generally parallel to the axis of rotation of the auger whereby the material is spread across the path, graded and smoothed at a desired height above the ground or support surface by the assembly when the assembly is moved in the predetermined direction along the path.

Preferably, the screeding assembly also includes an elongated plow/striker mounted on the support and spaced in front of the auger with respect to the predetermined direction to remove excess material and spread the material as the screeding assembly is moved.

Preferably, the screeding assembly also includes an adjustment assembly for raising and lowering the elongated engaging member with respect to the material to be screeded. The oscillating assembly preferably includes at least one slide member on the engaging member, a bearing member on the support for slidingly supporting the slide member, a camming member attached to the engaging member, and a motor for moving the camming member to reciprocate the slide member and engaging member on the bearing member. In a preferred form, the adjustment mechanism includes a slide support mounted on the support, the oscillating assembly being mounted on the slide support, and a manually-operable adjustment member, such as a threaded rod, operable to slidably move the slide support and oscillating assembly with respect to the support toward an away from the material. Preferably, vibration isolation members, such as rubber or other resilient mounts, are provided for isolating any vibration of the engaging member and oscillating assembly from the remainder of the screeding apparatus.

In other aspects of the invention, an improved screeding apparatus for loose or plastic material, such as placed and/or poured, uncured concrete previously placed on the ground or another support surface includes a support for supporting the apparatus on the ground or a support surface, a boom extending outwardly from the support, a boom support which mounts the boom on the support, a screed assembly, and a screed mount for mounting the screed assembly on the boom. The screed assembly is elongated and includes an elongated, rotatable auger having an axis of rotation generally transverse to the predetermined direction and mounted on the screed mount to move the material laterally of the predetermined direction of the auger axis and grade the material. A vibratory screed is also mounted on the screed mount and is positioned behind the auger with respect to the predetermined direction to smooth the material. An elongated engaging member is mounted on the screed mount and positioned intermediate the auger and the vibratory screed to engage and smooth the material. An oscillating assembly reciprocates the engaging member in a direction generally parallel to the axis of rotation of the auger whereby the material is spread across the path, graded, and smoothed at a desired height above the ground or other support surface when the assembly is moved in the predetermined direction along the path.

In a preferred form, the screeding apparatus may include an elongated plow/striker mounted on the screed mount and spaced in front of the auger with respect to the predetermined direction to remove excess material as the screeding assembly is moved in that direction. A pivot assembly is preferably included f or pivotally mounting the screed assembly on a first pivot axis extending generally parallel to the direction of elongation of the screed assembly and a motive power unit pivots the screed assembly about the pivot axis such that contact of the plow/striker, the oscillating/reciprocating engaging member and the vibratory screed with the material may be varied and adjusted to counteract the force of the material engaging the screed assembly during movement and to maintain proper screeding contact with the material. Further, a level sensor is preferably included on the screed assembly for sensing the position and degree of rotation of the screed assembly about the first axis while a control responsive to the level sensor actuates the motive power unit to pivot the screed assembly about the first axis.

In other aspects, the boom which supports the screeding assembly may comprise a telescoping boom having a plurality of boom sections movable with respect to one another and the support, the screed assembly being mounted at one end of one of the boom sections and including boom power source for extending and retracting the boom sections and screed assembly.

In other aspects, an elevation assembly raises and lowers the screed assembly with respect to the boom and preferably includes a screed elevation beam, spaced elevation tubes secured to the screed assembly at opposite ends of the screed elevation beam, and a pair of fluid cylinders for raising and lowering the elevation tubes with respect to the elevation beam. Preferably, a laser beam responsive control on the screed assembly is responsive to a fixed laser reference plane for controlling the raising and lowering of the screed assembly with the elevation assembly.

In yet other aspects of the assembly, a kit is provided for mounting an oscillating/reciprocating material engaging member on a screed assembly, the screed assembly adapted to spread, smooth and finish loose or plastic materials, such as placed and/or poured, uncured concrete previously placed on the ground or another support surface. The screed assembly is of the type including an elongated rotatable auger and a vibratory screed. The kit comprises an elongated engaging member, an oscillating assembly for mounting the engaging member on the support at a position adjacent the auger and for reciprocating the engaging member in a direction generally parallel to the axis of rotation of the auger, and a pair of extension plates for attachment to the support and supporting the vibratory screed at a position spaced behind the auger with respect to the predetermined direction to allow support and reciprocation of the engaging member at a position between the auger and vibratory screed.

In another aspect, the invention is an improved screeding method including providing a screed assembly having a rotational auger for moving the material in a lateral direction across the path of travel of the screed assembly and a vibratory screed positioned behind the auger with respect to the path of travel for engaging and smoothing the material. The method includes moving the screed assembly through the material in a predetermined direction to spread, grade and smooth the material while rotating the auger and vibrating the vibratory screed. The method also includes reciprocating an elongated engaging member on the material in a lateral direction at a position between the auger and the vibratory screed while moving the screed assembly through the material.

Accordingly, the present screeding apparatus and method provide improvements and advantages over prior known screeding structures and methods. The inclusion of the reciprocating/oscillating elongated member facilitates consolidation of the material such as on poured, uncured concrete especially of the stiffer consistency such as low slump (0 to 3 inches), large aggregate, or partially set-up concrete so as to better close the voids and openings in the concrete and provide a smooth, finished surface after engagement by the vibratory screed which follows the elongated member. When the oscillating elongated member is positioned between the rotational auger and vibratory screed, the oscillating engaging member contacts the open and torn texture left by the rotational auger and transforms the surface texture to a semi-closed surface which allows the vibratory sereed to finish the surface preparation much more easily. In addition, in the event the vibratory screed fails to function, the use of the oscillating engaging member substantially closes the voids and opening in the surface left by the rotational auger. In addition, the oscillating engaging member helps consolidate the aggregate in low slump concrete.

Further, the reciprocal action of the engaging member creates a motion in semi-hardened concrete that allows the fresh concrete that has been placed or poured from a second load on top of or next to the semi-hardened concrete poured from another load in an adjacent area to blend together with the semi-hardened concrete to create a uniform transition of the two different mixes or loads. By blending the two materials that are curing at different speeds, or if, in fact, one area or load is at a more advanced stage of curing or set up, the reciprocating motion of the engaging member creates a uniform transition and a better quality concrete surface along with a blending and mixture of the materials from the two loads. Such blending allows the blended and mixed portion to set up and cure at a rate of speed which is slower than the older concrete and yet faster than the fresher concrete. This blending action helps eliminate and minimize a cold joint which otherwise would be formed between the two areas, and helps prevent cracking while allowing blending of the textured surfaces of the two different loads so that the transition from one load to the next is not as identifiable

as would be if the loads were not blended in this manner. In addition, the reciprocal action of the engaging member allows concrete to be screeded at a lower slump which, in turn, allows immediate application of a broom textured surface without causing superficial damage to the surface. Further, by placing and screeding concrete at a lower slump, it allows faster set up and curing of the concrete, thereby enabling walking on the surface at an earlier time without damaging the broom textured appearance. Also, the screeding of lower slump concrete allows the concrete to be Soff cut at an earlier time and helps reduce final finishing labor.

Moreover, the oscillating engaging member greatly facilitates the striking off and screeding of an area that has a high percent of slope. During screeding of a sloped surface, the concrete can easily bubble under the vibratory screed and flow back down the slope if the slope is pronounced. In this situation, the screeding operator could elect to shut off the vibratory screed and use the oscillating engaging member to work the surface.

The invention also provides a kit for converting previously existing screeding assemblies of the type including a rotatable auger and vibratory screed to include the engaging member and an oscillating assembly for reciprocating the engaging member on the material at a position between the auger and vibratory screed to better consolidate the material or uncured concrete. When the screed assembly includes the oscillating/reciprocating engaging member, and the screed assembly is mounted on the screeding apparatus as described herein, the boom supporting the screed assembly may be operated and retracted at its normal speed or faster while still properly consolidating and finishing the concrete at a desired height thereby enabling more efficient operation and screeding of larger quantities of poured concrete during a working day, all with a high quality finish.

These and other objects, advantages, purposes and features of the invention will become more apparent from a study of the following description take in conjunction with the drawings.

BRIEF DESCRIPTIONS OF THE DRAWINGS

FIG. **1** is a perspective view of a self-propelled, laser guided, screeding apparatus incorporating a screeding assembly having an oscillating/reciprocating engaging member in accordance with the present invention;

FIG. **2** is a side elevation of the screeding apparatus of FIG. **1**;

FIG. **3** is a top plan view of the screeding apparatus of FIGS. **1** and **2**;

FIG. **4** is an exploded, perspective view of the screeding assembly of the present invention incorporating the engaging member and oscillating assembly therefor;

FIG. **5** is a sectional end elevation of the screeding assembly of the present invention also showing a hydraulic schematic for operating the level sensor controled pivoting apparatus which counteracts the force of concrete during operation of the screeding assembly;

FIG. **6** is an exploded perspective view of the pivot yoke and pivot assembly for supporting the screeding assembly on the boom;

FIG. **7** is a top plan view of the screeding assembly;

FIG. **8** is a sectional front elevation of the screeding assembly;

FIG. **9** is a fragmentary, sectional end elevation of a portion of the screeding assembly illustrating the support for the engaging member and oscillating assembly;

FIG. **10** is a fragmentary front elevation of the oscillating assembly for reciprocating the engaging member of the present invention;

FIG. **11** is a top plan view of the oscillating assembly of FIG. **10**;

FIG. **12** is a top plan view of the adjustment assembly for the oscillating assembly and engaging member of the present invention taken along plane XII—XII of FIG. **11**; and

FIG. **13** is a schematic illustration of the hydraulic system for operating the oscillating assembly of the present invention.

DESCRIPTION OF THE PREFERRED EMBODIMENTS

Referring now to the drawings in greater detail, FIGS. **1–3** illustrate a preferred form of an improved, self-propelled screeding apparatus **10** embodying the present invention. The screeding apparatus or machine **10** is a revised, improved version of the prior machine of U.S. Pat. No. 4,930,935 entitled SCREEDING APPARATUS AND METHOD, the disclosure of which is hereby incorporated by reference herein. Like the earlier machine, machine **10** is also designed for striking off, grading, leveling, smoothing, i.e., screeding concrete or other materials in restricted or open areas, but is particularly advantageous in areas in which it is inconvenient to lay support rails or guides and/or position large, rail supported screeding apparatus or slip form pavers. The present machine is also highly useful for screeding large areas of concrete since it avoids the necessity of laying a first strip which must harden before an adjacent strip can be poured or finished. In addition, the present machine provides improved leveling, grading and screeding efficiency, especially for stiffer, low slump, large aggregate or partially set-up concrete, while providing a compact apparatus which may be positioned and more easily used within confined areas in which concrete is to be laid.

OVERALL ASSEMBLY

As shown in FIGS. **1–3**, machine **10** includes a lower support frame **12** having front and rear propulsion support axles **14**, **16** each of which provide both propulsion and steering capability, four support wheels **18** preferably including rubber tires, and upper frame **20** which is rotatable on a large bearing **22** supported on lower frame **12** and includes an operator support platform **24** along with an engine/hydraulic pump compartment **26**. The wheels on axles **16**, **18** are individually powered by hydraulic motors. Bearing assembly **22** is substantially similar to that described in U.S. Pat. No. 4,655,633, the disclosure of which is hereby incorporated by reference herein, and is powered by an hydraulic rotation motor which rotates the upper framework **20** with respect to the lower framework **12** through 360°. Appropriate controls for the machine are positioned on a tiltable instrument/steering console **28** which may be locked with locking handle **30** either in an operating position (not shown) or an upright withdrawn position (shown in FIG. **1**) allowing entry of the operator. Additional controls **32** (FIGS. **2** and **3**) are located to the left and right of the driver's seat. Four extendable, telescoping stabilizer legs **34**, one at each corner of support frame **12**, each including a ground engaging foot or plate **35** extend downwardly for extension and retraction by separate hydraulic cylinders to engage the ground or other support surface when the screeding apparatus is positioned adjacent an area of material such as uncured concrete to be screeded. Exten-

sion of the legs lifts the entire apparatus off wheels and tires **18** to provide a stabilized support platform during the screeding operation. Upper frame **20** also provides support for the telescoping boom assembly **40**.

Boom **40** extends outwardly from upper frame portion **20** below the operator's platform **24** and is mounted for horizontal, telescoping extension and retraction on suitable bearings. On the outer, free end of boom assembly **40** is a screed mounting assembly **42** to which screed elevation assembly **50** is attached. A screed assembly **100** is, in turn, mounted to be raised and lowered with respect to the material to be screeded on elevation assembly **50**. An automatic screed elevation control system, preferably using laser beacon receivers **52**, is included on screed elevation assembly **50** and is connected to an appropriate control mounted on operator platform **24** on upper frame portion **20**. By means of the rotatable upper frame portion **20**, boom **40** carrying screed mounting assembly **42**, screed elevation assembly **50** and screed assembly **100**, may be rotated 360° around lower frame **12** on bearing **22** for spreading, distributing, smoothing and/or grading and leveling, i.e., screeding the placed and/or poured, uncured concrete adjacent the machine.

As will be understood from U.S. Pat. No. 4,930,935 incorporated by reference herein, boom **40** may be rotated such that it extends rearwardly behind frame **12** and axle **16** with screed assembly **100** positioned behind the rear support wheels **18** and axle **16**. In this configuration, machine **10** may be driven through the placed and/or poured, uncured concrete with the smoothing and finishing proceeding behind the rear wheels as the apparatus moves slowly through the concrete. Preferably, any tracks are filled in as the concrete or other material is smoothed therebehind.

Mounted within engine compartment **26** are a conventional internal combustion diesel, gasoline or electric engine **80** (FIG. **5**). Engine **80** provides power to a single, variable displacement, hydraulic pump **82** (FIG. **5**) which is preferably load sensing and draws and returns hydraulic fluid from tank or reservoir **84** (FIG. **13**). Engine compartment **26** also houses a battery **85** (FIG. **5**) for starting engine **80** and providing power to the various electrical controls and various hydraulic system components including an hydraulic fluid filter **86** (FIG. **13**) and the like. Preferably, hydraulic reservoir or tank **84** is housed within the engine compartment **26** on upper frame **20**.

The principal changes in the present improved screeding apparatus and method are more fully described hereinafter and include an oscillating/reciprocating, elongated, engaging member **108** in the form of a strip or bar which is positioned intermediate the rotational auger assembly **104** and vibratory screed **106** of screed assembly **100**, as is more fully explained below. The oscillating/reciprocating engaging member **108** moves laterally to and fro, transversely across the path of travel of the screeding assembly as it is moved by boom assembly **40** over the material to be screeded and helps consolidate and fill the voids within stiffer consistency concrete, such as, partially set, low slump, or large aggregate concrete, such that the vibratory screed can properly complete the smoothing and finishing of the concrete thereafter.

For purposes of the present application, the apparatus and method will be understood to principally refer to the placement, i.e., screeding, of previously poured, uncured concrete or like loose, spreadable material, such as sand, gravel, asphalt or other viscous fluid materials previously placed on the ground or on other surfaces, such as in parking ramps, on decks, in buildings or the like. The present apparatus and method is especially useful in stiffer, low slump, large aggregate, or partially set but uncured concrete. It will be recognized, however, that the present apparatus and method avoids the use of pre-positioned guide rails or supports for the screeding apparatus thereby eliminating significant amounts of labor and expense in the concrete finishing operation.

The hydraulic fluid circuit used in conjunction with apparatus **10** and pump **82** is preferably a closed center, load sensing system with manually adjustable flow controls for all functions of the machine which require speed control. Variable displacement pump **82** provides a volume of hydraulic oil required for functions being used at a pressure of approximately 200–400 psi above the pressure required by the function requiring the highest pressure. If no functions are being used, the pump will provide just enough flow to make up for internal pump leakage, valve leakage, and load sense bleed-down leakage and also to maintain a pressure of 200–400 psi. Apart from the specific controls for the oscillating/reciprocating engaging member **108**, the telescoping boom controls, dual propulsion motors, single variable displacement pump operation, and the other hydraulic system and controls are substantially similar to those used in the apparatus of U.S. Pat. Nos. 4,655,633 and 4,930,935. The hydraulic system also includes a rotatable hydraulic swivel assembly such as that used in U.S. Pat. No. 4,655,633 which is mounted to project downwardly from upper frame **20** and upwardly through the center of the rotational bearing assembly **22** to provide fluid communication between the upper rotating framework **20** (where the internal combustion engine **80** and hydraulic pump **82** are located) and the lower framework **12** (where numerous fluid motors or connections to fluid motors are located).

As will be understood from FIGS. **1–3**, boom assembly **40** is substantially as described in U.S. Pat. No. 4,930,935 and includes a large, hollow boom section **44** telescopically inserted and nested within the interior of a boom support structure **46** on suitable bearings under operator platform **24** on upper frame **20**. A slightly smaller outer boom section **48** is telescopically inserted within large boom section **44** on suitable bearings. Boom sections **44**, **48** are extended and retracted from boom support structure **46** by means of a fluid power cylinder and pulley and cable system as described in U.S. Pat. No. 4,930,935 mounted within upper frame **20** and as controlled by the operator.

Preferably, a hydraulic hose and electric cable support assembly is included within large boom section **44** for extension and take up of the hydraulic hoses H and electrical cables E (FIG. **1**) leading from the lower portion of the upper frame assembly **20** forwardly to the outer free end of smaller boom section **48**, all as described in U.S. Pat. No. 4,930,935.

SCREED ASSEMBLY AND SCREED ELEVATION ASSEMBLY AND CONTROL SYSTEM

Referring now to FIGS. **1–3** and **4–12**, screed assembly **100** is mounted on screed mounting assembly **42** such that assembly **100** may be moved toward and away from the upper frame **20** and lower support frame **12** on telescoping boom assembly **40** by means of a boom operating fluid cylinder and pulley and cable assembly as described above. As is best seen FIGS. **1** and **4–8**, screed assembly **100** is an improved version of the screed assembly of U.S. Pat. No. 4,930,935, and includes a plow or striker **102** positioned in front of (i.e., on the side facing frame **12**) rotational auger

104 with respect to the preferred direction of motion of the screed assembly on boom assembly 40. A vibrationally isolated, vibratory screed 106 is positioned behind rotational auger 104 with respect to the direction of travel of the screed assembly. In addition, screed assembly 100 includes an oscillating/reciprocating engaging member 108 positioned between and intermediate the positions of rotational auger 104 and vibratory screed 106 as is best seen in FIGS. 4 and 5. In addition, screed assembly 100 includes a pivot axis 110 and an electrohydraulic level sensing unit 112 (FIG. 4) and an associated control 114 (FIG. 5) for automatically counteracting the force of concrete or other material to be screeded which acts against the plow/striker 102 and which would otherwise change the position of the plow, engaging member and vibratory screed and prevent effective screeding.

Screed assembly 100 includes an elongated horizontally extending screed support beam 116 (FIG. 4) including a pair of spaced, vertically extending, extension end plates 118 at either end of the beam. Centrally located beneath support beam 116 is a rotational auger assembly 104 including a continuous, helical auger 120 (preferably about twelve feet in length in the preferred embodiment) rotationally mounted generally parallel to beam 116 on a pair of spaced pillow blocks 122, one at either end of the support beam 116. Pillow blocks 122 are bolted to a bearing support on the underside of support beam 116 adjacent end plates 118. Auger assembly 104 is preferably rotated by a single hydraulic motor 124 (FIGS. 4 and 7) located at one end of the screed assembly such as the left end. This causes concrete to be moved left or right along the axis of the auger blade 120 in a lateral direction generally perpendicular to the direction in which screed assembly 100 is moved by boom 40 depending on the directional rotation in which hydraulic motor 124 is operated.

Spaced forwardly of rotational auger assembly 104 at the front edge of support beam 116 is an elongated plow 102 having a mold board 126 and end plates 128 (FIGS. 4 and 5). Plow 102 is secured rigidly to the front edge of beam 116 such that it establishes the initial rough grade or concrete height by removing excess concrete in front of auger assembly 104 while allowing a predetermined portion of the concrete to pass therebeneath. As auger 120 is rotated, it carries concrete toward one end of the screed assembly 100. End plow 130 (FIG. 7), which is preferably mounted at the downstream end of auger 120 toward which the concrete is moved, deflects the concrete away from the same end of vibratory screed 106 thereby preventing any buildup of concrete at that end.

On the rear side of screed assembly 100 is a vibrationally isolated, vibratory screed 106 best seen in FIGS. 1, 4 and 5. Screed 106 includes a pair of elongated, continuous, one-piece cylindrical tubular beams 132, 134 each having end caps at opposite ends closing the tubes. At the ends of each tube are resilient cylindrical mounts 136, preferably formed from rubber or another resilient material, secured in place by bolts 138 threaded into the end caps. Bolts 138 are received in slots 142 in extension plates 140 (FIG. 4) which, in turn, are bolted to end plates 118 so as to space the entire vibratory screed 106 rearwardly behind auger assembly 104 to provide a space for mounting of oscillating/reciprocating engaging member 108 as described hereinafter. By tightening or loosening the nuts on bolts 138, the angle of vibratory screed 106 can be changed with respect to the vertical.

Tubular members 132, 134 are secured in their vertically spaced positions by a series of spacer plates 144 welded at spaced intervals along the lengths of the tubes. Each spacer plate 144 includes bracing plates or gussets 146 welded on either side thereof adjacent the spacer plates. End gussets 150 (FIG. 4) are provided at the ends of the vibratory unit. Along the lower side of tubular member 134 is a channel member 152 providing a generally planar, concrete engaging screed strip which extends continuously from one end of the screed 106 to the other. As is best seen in FIG. 5, screed channel 152 is secured to tube 134 by means of semicircular hanger brackets 154 positioned in a saddle-like manner over the top of tube 134. Each bracket 154 is aligned with a pair of mounting blocks 158 on either side of channel 152 at each hanger bracket position. Threaded rods 156 extend from each side hanger bracket 154 into mounting blocks 158 and are secured by nuts to hold the channel tightly against the underside of tube 134. As described in U.S. Pat. No. 4,930,935, one or more deflection/adjusting assemblies may be provided along the length of lower tube 134 to adjust the position of the screed channel 152 at various locations along its length such that the overall shape of channel 152 may be trued to avoid sags or curves along its length.

As is best seen in FIG. 4, vibration for screed 106 is provided by a rotatable shaft 160 mounted in a series of bearing pillow blocks 162, one bearing block on each of the support plates 144 along the length of the screed. Shaft 160 extends through one end support plate 150 to an hydraulic motor 164 which rotates shaft 160 in either clockwise or counterclockwise direction as determined by hydraulic fluid directed to the motor through appropriate hydraulic lines. A series of weights are bolted to shaft 160 eccentrically with respect to the shaft axis and immediately adjacent bearings 162 by U-bolts to cause vibration of assembly 106 when hydraulic motor 164 is operated to rotate shaft 160. Yet, because screed 106 is mounted on screed assembly 100 with rubber mounts 136, vibration of screed 106 is isolated from the remainder of the screed assembly.

As is best seen in FIGS. 4, 5, 7 and 8, screed assembly 100 also includes an oscillating/reciprocating engaging member 108 to facilitate consolidation of the uncured concrete after grading and spreading by auger assembly 104 and prior to vibratory contact, smoothing and finishing by vibratory screed assembly 106. Oscillating/reciprocating engaging member 108 includes an elongated, rectilinear, tubular beam formed from metal or plastic having an elongated strip 172 welded or otherwise secured to the bottom surface of the beam. Preferably, strip 172 has inclined or beveled leading and trailing edges 174, 176 to facilitate flow of concrete thereunder as screed assembly 100 is moved. The elongated engaging member 108 formed by beam 170 and strip 172 is supported for reciprocal movement parallel to the axis of rotational auger assembly 104 by means of a pair of support brackets 178 and a pair of oscillating assemblies 180, 182 which are bolted to the brackets 178 (FIGS. 4, 5 and 7–12). As shown in FIGS. 4, 5 and 7–10, brackets 178 are bolted to the top surface of support beam 116 and include gusseted attachment portions 184 and vertically oriented attachment plates 186 which arc cantilevered outwardly to the rear of support beam 116. Oscillating assembly 180 differs from support assembly 182 by the inclusion of an hydraulic motor for powering the reciprocating movement of the engaging member 108 formed by beam 170 and strip 172.

As is best seen in FIGS. 4 and 9–12, oscillating support assemblies 180, 182 include mounting posts 188 bolted to the inside surfaces of vertical attachment plates 186 on brackets on 178 and include slotted slide channels 190 therein receiving flanged mounting plates 192. Mounting plates 192 are slidably received in slots 190 for vertical sliding movement to enable adjustment of engaging member

108 toward and away from the material to be screeded such as poured, uncured concrete. Vertically oriented supports 194 are bolted to flanged mounting plates 192 by means of a pair of spaced rubber or other resilient material vibration isolating cylindrical mounts 196. At the lower end of vertical supports 194 are a pair of parallel through apertures 198 in which cylindrical sleeve bearings 200 are mounted, each bearing sleeve receiving a cylindrical slide rod 202. Slide rods 202 are secured between a pair of upstanding, generally triangularly shaped supports 204 bolted to the top surface of beam 170. Accordingly, beam 170 and strip 172 are free to oscillate/reciprocate to and fro on slide rods 202 in bearing sleeves 200 such that the entire engaging member can move laterally across the path of travel of screed assembly 100.

Support assembly 180 also includes motive power means for oscillating or reciprocating the elongated engaging member in contact with the material to be screeded. As is best seen in FIGS. 10 and 11, assembly 180 includes a generally triangular motor support 206 bolted to support 194 and having a horizontal plate 208 welded or otherwise secured thereto and supporting an hydraulic motor 210 thereon. The rotational shaft 212 of motor 210 projects through plate 208 and supports a circular plate 214 for rotation under plate 208. A cam shaft 216 is secured near the perimeter of circular plate 214 and projects downwardly for engagement with the inner race of a bearing assembly 218 having its outer race slidably mounted in a rectilinear channel 220 on the top surface of upstanding support 222 which is bolted to the top surface of beam 170. Accordingly, when hydraulic motor 210 is operated, circular plate 214 is rotated under support plate 208 causing movement of cam shaft 216 in a rotational path which, in turn, causes bearing assembly 218 to move to and fro in channel 220 along with beam 170 and strip 172 in the direction of the arrow in FIGS. 10 and 11 while bearing assembly 218 slides and/or rolls back and forth in channel 220 in a direction transverse to the reciprocating motion of beam 170 and strip 172. Accordingly, hydraulic motor 210 imparts reciprocating motion to the beam 170 and strip 172 as supported on slide rods 202 in bearing sleeves 200 via the cam and roller connection between support 222 and rotating motor shaft 212.

As shown in FIG. 13, a preferred hydraulic system for controlling the oscillation/reciprocation of oscillating engaging member 108 via hydraulic motor 210 is provided by admitting hydraulic fluid under pressure from pump 82 and motor 80 through line 90 to a manually adjustable fluid flow control valve 92 and a manually operable spool valve 94 mounted on platform 24 to rotate hydraulic motor 210 in either a clockwise or counterclockwise direction, as desired. Fluid is returned through the spool valve 94 via return line 96 and hydraulic fluid filter 86 to reservoir 84. Preferably, the flow of hydraulic fluid pressure through spool valve 94 to hydraulic motor 210 is set to reciprocate engaging member 108 at about 30 to 70 oscillations per minute, depending on the speed of movement of the screed assembly 100 over the material to be screeded and the condition of the material such as stiffer concrete, including low slump, partially set, or large aggregate concrete.

Vertical adjustment of the position of engaging member 108 with respect to the material to be screeded is accomplished by means of a threaded rod 230 mounted in bearings 232 on support plates 234 bolted to the top of each mounting post 188 (FIGS. 9 and 12) in each oscillating assembly 180, 182. Threaded rods 230 each include a larger diameter adjustment knob 236 at the top end which is intended for manual rotation by an operator of the screeding assembly prior to use. Each threaded rod 230 extends downwardly into a tapped hole 238 (FIG. 12) extending into the length of the respective flanged mounting plate 192. Accordingly, clockwise or counterclockwise rotation of adjustment knobs 236 on assemblies 180, 182 causes lowering or raising, respectively, of the oscillating/reciprocating engaging member 108 formed by tubular beam 170 and strip 172. The angle of the oscillating assembly to the vertical may be adjusted by loosening bolts 239 and moving the top end of the oscillating assembly in slot 240 provided in attachment plate 186 (FIG. 9).

As is best seen in FIGS. 1–6, screed assembly 100 is preferably pivotally mounted about a pair of orthogonal pivot axes at each end of the screed assembly with respect to the screed elevation beam 50 by means of an electro-hydraulic leveling assembly 250 (FIG. 5). Assembly 250 includes a rectangular pivot yoke 252 (FIG. 6) fitted between laterally spaced portions of end plates 118, 118*a* and secured for pivotal movement in a vertical plane on a generally horizontal axis 110 extending parallel to the direction of elongation of the screed assembly by means of securing bolts 254 and bushings 256 passing through plates 118, 118*a* and pivot yoke 252. An hydraulic fluid cylinder 258 is pivotally secured to the upright end plates 118, 118*a* by means of a laterally extending pivot axle 260 secured to one end of the cylinder and pivotally mounted in bushings 262 extending inwardly from end plates 118, 118*a*. Cylinder rod 259 extends from the opposite end of fluid cylinder 258 and is secured by a pivot pin 266 between a pair of spaced upright plates 264 which are rigidly secured to one end of pivot yoke 252. The horizontal pivot axis 110 provided by yoke 252 and bolts and bushings 254, 256 is vertically aligned and centered above the rotational axis of auger assembly 104 as is best seen in FIG. 5. Accordingly, operation of the fluid cylinder 258 to extend cylinder rod 259 causes counterclockwise rotation of the screed assembly about the axis on bolts and bushings 254, 256 as shown in FIG. 5, thereby raising plow 102 and lowering engaging member 108 and vibratory screed 106. However, retraction of cylinder rod 259 raises engaging member 108 and vibratory screed 106 and lowers plow 102 by causing clockwise rotation around the horizontal pivot axis 110. In either case, since the rotational auger is vertically aligned with the pivot axis, rotation via fluid cylinder 258 causes little or no variation in the position or height of rotational auger 104. Positioning of plow/striker 102 ahead of auger 104, oscillating engaging member 108 and vibratory screed 106 prevents "tearing" of the concrete surface which could otherwise occur if the plow/striker followed the auger. With the preferred arrangement of the screed assembly 100, the grade is very accurately established and the consolidation, smoothing and finishing carried out by the trailing oscillating/reciprocating engaging member and vibratory screed is considerably easier.

Fluid cylinder 258 is controlled to automatically position screed assembly 100 on axis 110 provided by bolts 254 and maintain proper contact of plow 102, oscillating/reciprocating assembly 108, and vibratory screed 106 using an electronic level sensor 112 bolted to the inside surface of upper end plate 118*a* as shown in FIG. 4 or elsewhere on the screed support beam 116. Sensor 112 detects an out of level condition whenever screed assembly 100 rotates 0.1° due to the force and pressure of concrete engaging plow 102 and tending to deflect the screed assembly and the plow downwardly thereby raising the oscillating engaging member 108 and vibratory screed 106. Detection of the rotation of 0.1 or more degrees rotation sends a signal to the electronic control circuit 114 connected to the electrical system and battery 85

of the screeding apparatus **10** as shown in FIG. **5**. Control **114**, in turn, sends a signal to a solenoid operated hydraulic valve **270** which directs pressurized hydraulic oil to the appropriate side of fluid cylinder **258** to bring the screed assembly **100** back to a level condition and to counteract the force of the concrete exerted against plow **102**. A manually adjustable flow control valve **272** is included to control the amount of fluid flow through valve **270** and, thus, the speed at which cylinder **258** causes rotation about axis **110**. The speed is set with flow control valve **272** at a slow enough rate to assure smooth operation without over shooting. Although flow control valve **272** has a flow control range of from about 0 to approximately 5 gallons per minute, it is preferably set to allow flow to solenoid operated valve **270** at a rate of less than 1 cubic inch per minute. A fluid lock valve **274** is included between valve **270** and cylinder **258** to prevent undesired rotation of the screed assembly about axis **110**. Although a load sensing hydraulic system including a load sensing pump **82** is shown for screeding apparatus **10**, a non-load sensing system could also be used. Preferably, level sensing unit **112** is that sold under model number KS 10201 by Sauer Sundstrand Co. of Ames, Iowa.

Also, alternate power sources other than cylinders **258** may be substituted to rotate screed assembly **100** on axis **110** such as hydraulic motors rotating threaded rods engaging pivotable members on yokes **252**.

Screed assembly **100** is mounted on and controlled for elevation on screed elevation control assembly **50**. As is best seen in FIGS. **1–3** and **6**, elevation assembly **50** includes a rectilinear screed elevation beam **280** secured to the underside of boom mount assembly **42** such that beam **280** extends perpendicular to the axial extent of boom assembly **40**. Beam **280** includes vertically extending cylindrical tubes **282, 284** on its respective ends through which are slidably mounted inner screed elevation tubes **286, 288** on bearings pressed inside tubes **282, 284**. The lower end of each inner screed elevation tube **286, 288** includes a tubular pivot foot **290** (FIG. **6**) which is slightly smaller than the internal lengthwise dimension of pivot yoke **252** such that it may be pivotally secured inside yoke **252** by pivot bolt **292** passing through the yoke in a direction orthogonal or perpendicular to the horizontal direction of elongation of screed assembly **100** and the horizontal pivot axis **110** provided by bolts **254** and bushings **256** described above. Pivot bolts **292** at either end of the screed assembly on screed elevation tubes **286, 288** allow the lateral tilt of the screed assembly to be adjusted by raising and lowering tubes **286, 288**. Thus, the lateral incline or slope of beam **280**, and thus plow/striker **102**, auger assembly **104**, oscillating engaging member **108** and vibratory screed **106** mounted thereon may be adjusted with respect to beam **280** to various slopes and ground contours.

In order to raise and lower screed assembly **100**, each elevation tube **286, 288** is vertically movable by means of an extendable hydraulic cylinder **294, 296** pivotally mounted between flanges **298, 300** extending inwardly from the exterior of the vertically extending outer tubes **282, 284** immediately above screed elevation beam **280**. When hydraulic fluid pressure is applied to the head end of cylinders **294, 296**, the pistons are extended raising tubes **286, 288** along with screed assembly **100**. If an incline or slope for the screed assembly **100** is desired, one or the other of the tubes may be raised or lowered via cylinders **294, 296**, without movement of the other. As explained below, such elevation is typically controlled automatically through a laser beacon reference control system, although manual override of such system can be accomplished through operator controlled valving on platform **24** to raise and/or lower screed assembly **100** at a different pace.

As will be understood from FIGS. **1–3**, a laser beacon reference plane control system for automatically controlling the elevation of screed assembly **100** by means of elevation tubes **286, 288** is substantially similar to that used in the apparatus of U.S. Pat. Nos. 4,655,633 and 4,930,935. The control system includes a pair of laser receiver mounting masts **302, 304** extending vertically upwardly from elevation tubes **282, 284**. A laser beacon receiver **52** is removably secured to each mast by a screw type clamp. Receivers **52** are 360° omnidirectional receivers which detect the position of a laser reference plane such as that provided by a long range rotating laser beacon projector of which many are commercially available. The projector (not shown) is preferably positioned remote from the screeding apparatus **10** adjacent to the area on which the concrete or other material is to be finished. The rotating laser beacon reference plane generated by the projectors is received and detected by laser receivers **52** which then generate electric signals transmitted through appropriate electrical connections **53**, including cable E extending along boom **40**, to laser control circuits on platform **24**, one being providing for each elevation and hydraulic cylinder **294, 296**. The control circuits are commercially available and receive and process the signals from the laser receivers **52** and transmit electrical signals to laser controlled, solenoid operated hydraulic valves as described in U.S. Pat. No. 4,655,633 which arc connected by appropriate hydraulic lines to hydraulic cylinders **294, 296**. Accordingly, when hydraulic pressure from hydraulic pump **82** is applied to the solenoid valves, the valves allow pressure into cylinders **294, 296** as controlled by the electronic control circuits, and cylinders **294, 296** raise or lower screed assembly **100** in relation and reference to the laser beacon reference plane provided by the off vehicle projector. The control circuits provide proportional time value outputs for driving the solenoid valves and automatic elevation control when the changes in elevation of the screed assembly **100** are minimal, but allow manual override and gross adjustment of the screed assembly elevation by the machine operator when desired. Regardless of whether the screeding operation takes place with the machine in a fixed position with boom assembly **40** being withdrawn inwardly toward the machine for screeding concrete adjacent the machine, or the machine is driven through freshly placed and/or poured concrete with the boom rotated to a position behind the vehicle and the screed assembly is fixed at a position behind axle **16** on boom **40**, automatic elevation control of the screed assembly **100** will take place via the laser beacon reference control system in the above manner.

PREFERRED OPERATION AND METHOD

As will now be understood, screeding apparatus **10** is used to screed uncured concrete or other like materials. Apparatus **10** is preferably moved with boom assembly **40** in a retracted position such that screed assembly **100** is close in to the vehicle while elevation cylinders **294, 296** are fully raised. The speed of the vehicle may be controlled by adjusting manual valves adjacent the operator. When in position, upper frame **20** is rotated such that boom assembly **40** is substantially perpendicular to the left side of lower frame **12** as shown in FIGS. **1–3**. Stabilizer cylinders **34** are first extended such that foot pads **35** raise the lefthand tires **18** slightly off the ground. Thereafter, the right side stabilizers **34** are lowered to contact their foot pads **35** with the ground and raise the right side of the apparatus slightly more than the left side such that boom assembly **40** is at an approxi-

mate 2% grade with the tip of the boom lower than the boom support structure **46** and the boom approximately one-half way extended. Such slope allows more efficient operation of the laser operated screed elevation control system as described below. Thereafter, the control valves for the screed elevation cylinders **294**, **296** are set to move those cylinders at a rate of about 24 to 28 inches per minute and the laser beam projector is set up adjacent the poured concrete area of the apparatus **10**. Laser receivers **52** are positioned on masts **302**, **304** such that they receive the laser plane projection for control of the screed elevation. In addition, the screed assembly **100** is checked to determined whether the screed strip **152** has any sags or unevenness along its length. If so, one of the screed deflection adjustment assemblies is used to increase or decrease tension on the member and raise or lower the various portions of the screed strip preferably using a string line such that the screed strip is trued along the string line when stretched beneath the screed.

In addition, set up assemblies **310** (FIGS. **1**, **4** and **8**) are engaged at either end of screed assembly **100** by pressing spring-biased shoes **312** downwardly with a grade stick on which a separate laser receiver is mounted until the spring biased shoe **312** is even with the lowermost edge of auger assembly **104**. If the position of the auger **104** as measured in such manner is higher or lower than required for the proper grade, the screed assembly is adjusted up or down via the controls adjacent the operator prior to the start of screeding.

Screeding is begun by actuating the appropriate hand controlled fluid valve to retract the boom assembly **40** slowly while controlling the speed of retraction with a flow control on the valve. Typically, the speed of the boom retraction is set at about 15 to 20 feet per minute although this depends on the slump of the concrete, the accuracy desired, and the height to which the concrete was poured. Typically, strips of concrete are finished at a width of 10 to 11 feet per pass using approximately 1 foot overlap between strips while occasionally checking the grade with a stick or level eye between passes. Positioning the boom at approximately a 2% grade allows the screed assembly to rise slightly as it progresses toward the machine. As a result, when the screed assembly starts out on target with the projected laser beam, it will rise slightly above the target within a short distance and the elevation control system will lower it back to the target. This pattern repeats continuously resulting in a sawtooth pattern with an approximately ⅛th inch amplitude thereby avoiding any dead band area of the screed control apparatus and more accurately controlling the elevation of the finished screed.

As screed assembly **100** is retracted on boom assembly **40** as shown in FIGS. **1–3**, plow **102** removes excess concrete, rotational auger **104** removes and/or distributes the concrete passing beneath the plow by moving the concrete laterally with respect to the direction of movement of the boom and screed assembly, while oscillating/reciprocating assembly **108** and vibrating screed **106** consolidate and smooth the concrete. Typically, as shown in FIG. **5**, screed assembly **100** is set such that plow **102** is approximately ¾ inch higher than auger assembly **104**, and auger assembly **104** is approximately ¼ inch higher than the material engaging surface of oscillating engaging member **108** or vibratory screed **106**. Such settings do not alter the grade established by the plow/striker **102** and auger assembly **104**. The oscillation of engaging member **108**, which is in engagement with the uncured concrete or other material being screeded, greatly helps consolidate the concrete by reducing the number of voids and openings in large aggregate concrete, low slump concrete, or stiffer concrete such as that which is partially set. The oscillation of engaging member **108** on the concrete, followed closely by the contact of vibratory screed strip **152**, properly smooths and finish the concrete and allows movement of screed assembly **100** over such stiffer concrete at generally the same rate of retraction of boom assembly **40** or movement of apparatus **10** through the concrete with screed assembly **100** therebehind as would otherwise be possible with freshly poured, uncured concrete or higher slump concrete.

During operation, screed assembly **100** may be deflected due to horizontal pressure of the concrete buildup in front of the plow/striker **102** and the slope change at the end of the boom assembly as it travels from extended to withdrawn position. Since rotational auger assembly **104** and its centerline are mounted directly below pivot axis **110** of the screed assembly, auger **120** will remain on grade regardless of such angular deflection in the screed assembly. In essence, screed assembly **100** rotates about the axis of the auger during operation. Such deflection causes plow **102** to lower slightly and oscillating member **108** and vibratory screed **106** to rise slightly relative to the auger. If such rotation is large enough, plow **102** could lower sufficiently to be below auger **120** and oscillating member **108** and vibratory screed **106** would be lifted out of contact with the concrete causing inconsistent smoothing, significant voids in the concrete surface, and possible "tearing" of the concrete surface.

The present invention controls this problem by automatically sensing the rotation position of screed assembly **100** with level sensor **112** which controls fluid cylinders **258** at either end of the screed assembly to cause pivotal rotation around axis **110** on bolts **254**. Allowable rotation on the axis **110** is ±7° in the preferred embodiment although normal corrections during screeding are in the ¼–1½° range with corrections occurring each time the screed assembly **100** rotates 0.1° out of level. When sufficient rotational movement is detected by level sensor **112**, a signal is sent by the sensor to control circuit **114** which in turn relays a signal to solenoid operated hydraulic valve **270** to direct pressurized hydraulic oil to the appropriate side of cylinders **258** to counteract the force of the concrete on the plow and bring the screed assembly back to a level condition. As above, since the auger is vertically aligned with axis **110**, and elevation cylinders **294**, **296**, the position of auger **104** is substantially maintained and moves only nominally during such adjustments.

At the same time that screed assembly deflection is compensated for automatically, vibratory screed **106** and oscillating engaging member **108** are being operated with hydraulic motors **164** and **210**. Resilient, isolation mounts **136** and **196** substantially isolate all such vibration and oscillation from the remainder of the screed assembly so that plow **102** and rotational auger **104** maintain efficient operation to grade, distribute and level the concrete. Simultaneously, the elevation of screed assembly **100** is constantly monitored by the laser beam receivers **52** to maintain the elevation of the screed assembly at the proper level. In addition, screed assembly **100** may be adjusted for various slopes and inclines laterally with respect to the direction of movement of the boom assembly **40** and screed assembly **100** by pivoting the screed at either end about the parallel axes provided by bolts **292** which are positioned orthogonally with respect to the axis of bolts **254**. This same elevation and screed assembly rotational compensation will occur if the screed assembly is positioned behind the screed apparatus for screeding as the machine **10** is driven through the uncured concrete. Elevation can be also controlled by a

computer mounted on the operator platform and including appropriate software to vary the elevation of the screed assembly in relation to the fixed laser plane to provide vertical curves in the concrete, conical services for drains, or other contours in the concrete.

While several forms of the invention have been shown and described, other forms will now be apparent to those skilled in the art. Therefore, it will be understood that the embodiments shown in the drawings and described above are merely for illustrative purposes, and are not intended to limit the scope of the invention which is defined by the claims which follow including the doctrine of equivalents.

What is claimed is:

1. An improved screeding method for screeding material such as placed and/or poured, uncured concrete with a screed assembly, said method comprising:

providing a screed assembly having a rotational auger for moving the material in a lateral direction across the path of travel of said screed assembly, and a vibratory screed positioned behind said auger with respect to said path of travel for engaging, vibrating and smoothing the material;

moving the screed assembly through the material in a predetermined direction to spread, grade and smooth the material while rotating said auger and vibrating said vibratory screed;

reciprocating an elongated engaging member on the material in said lateral direction at a position between said auger and said vibratory screed while moving said screed assembly through the material; and

pivoting the auger, engaging member and vibratory screed in unison about a pivot axis extending in said lateral direction to counteract the force of the material acting on said screed assembly and to maintain effective screeding contact of said screed assembly with the material.

2. The method of claim **1** including providing a plow/striker positioned on said screed assembly in front of said auger with respect to said path of travel of said screed assembly, and spreading and grading the material with said plow/striker while moving said screed assembly through the material.

3. The method of claim **2** including pivoting said plow/striker in unison with said auger, engaging member and vibratory screed about said pivot axis during movement of said screed assembly.

4. The method of claim **3** including sensing the position of said screed assembly with a sensor on said screed assembly and pivoting said screed assembly about said pivot axis in response to said sensor with a power source on said screed assembly.

5. The method of claim **3** wherein said moving step includes supporting said screed assembly on an extendable, telescoping boom assembly and retracting said boom assembly with said screed assembly thereon at a predetermined rate.

6. The method of claim **5** including moving the material laterally of said predetermined direction with said auger to form an evenly distributed layer of the material while said boom assembly and screed assembly are being retracted.

7. The method of claim **6** including vibrating said vibratory screed to smooth the distributed layer of material while isolating the vibration from the remainder of said screed assembly.

8. The method of claim **1** including controlling the elevation of said screed assembly with respect to a fixed reference located external to said screed assembly with a control assembly on said screed assembly.

9. The method of claim **8** wherein said control assembly includes a power source for raising and lowering said screed assembly; said step of controlling the elevation of said screed assembly including providing a fixed reference plane with a laser beacon positioned off the screed assembly, receiving the laser beacon with a laser beacon receiver, generating a signal indicating the position of the screed assembly relative to the reference plane with a signal means, and operating the power source to raise or lower the screed assembly in response to the signal from the signal means.

10. The method of claim **1** including vibrating said vibratory screed and reciprocating said engaging member on the material while said screed and engaging member are each positioned at levels positioned below the lower edge of said auger.

11. An improved screeding method for screeding material such as placed and/or poured, uncured concrete with a screed assembly, said method comprising:

providing a screed assembly having a rotational auger for moving the material in a lateral direction across the path of travel of said screed assembly, a plow/striker positioned in front of said auger with respect to said path of travel for removing excess material and spreading the material, and a vibratory screed positioned behind said auger with respect to said path of travel for engaging, vibrating and smoothing the material;

moving the screed assembly through the material in a predetermined direction to remove excess material, and spread, grade and smooth the material while rotating said auger and vibrating said vibratory screed; and

reciprocating an elongated engaging member on the material in said lateral direction at a position between said auger and said vibratory screed while moving said screed assembly through the material.

12. The method of claim **11** including pivoting the plow/striker, auger, engaging member and vibratory screed in unison about a pivot axis extending in said lateral direction to counteract the force of the material acting on said screed assembly and to maintain effective screeding contact of said screed assembly with the material.

13. The method of claim **12** including sensing the position of said screed assembly with a sensor on said screed assembly and pivoting said screed assembly about said pivot axis in response to said sensor with a power source on said screed assembly.

14. The method of claim **11** wherein said moving step includes supporting said screed assembly on an extendable, telescoping boom assembly and retracting said boom assembly with said screed assembly thereon at a predetermined rate.

15. The method of claim **14** including moving the material laterally of said predetermined direction with said auger to form an evenly distributed layer of the material while said boom assembly and screed assembly are being retracted.

16. The method of claim **15** including vibrating said vibratory screed to smooth the distributed layer of material while isolating the vibration from the remainder of said screed assembly.

17. The method of claim **11** including controlling the elevation of said screed assembly with respect to a fixed reference located external to said screed assembly with a control assembly on said screed assembly.

18. The method of claim **17** wherein said control assembly includes a power source for raising and lowering said screed assembly; said step of controlling the elevation of

said screed assembly including providing a fixed reference plane with a laser beacon positioned off the screed assembly, receiving the laser beacon with a laser beacon receiver, generating a signal indicating the position of the screed assembly relative to the reference plane with a signal means, and operating the power source to raise or lower the screed assembly in response to the signal from the signal means.

19. The method of claim **11** including vibrating said vibratory screed and reciprocating said engaging member on the material while said vibratory screed and engaging member are each positioned at levels positioned below the lower edge of said auger.

* * * * *

UNITED STATES PATENT AND TRADEMARK OFFICE

CERTIFICATE OF CORRECTION

PATENT NO. : 6,152,647
DATED : November 28, 2000
INVENTOR(S) : John A. Tapio, Nels D. Tapio and Kyle J. Tapio

It is certified that error appears in the above-identified patent and that said Letters Patent is hereby corrected as shown below:

Column 3,
Line 31, "f or" should be -- for --

Column 4,
Line 43, "sereed" should be -- screed --

Column 10,
Line 56, "arc" should be -- are --

Column 14,
Line 28, "arc" should be -- are --

Signed and Sealed this

Twenty-first Day of January, 2003

JAMES E. ROGAN
Director of the United States Patent and Trademark Office