US006623208B2

(12) **United States Patent**
Quenzi et al.

(10) **Patent No.: US 6,623,208 B2**
(45) **Date of Patent: Sep. 23, 2003**

(54) **CONCRETE PLACING AND SCREEDING APPARATUS AND METHOD**

(75) Inventors: **Philip J. Quenzi**, Atlantic Mine, MI (US); **Carl B. Kieranen**, Toivola, MI (US); **Jeffrey W. Torvinen**, Painesdale, MI (US); **Charles A. Hallstrom**, Calumet, MI (US); **Mark A. Pietila**, Atlantic Mine, MI (US)

(73) Assignee: **Delaware Capital Formation, Inc.**, Wilmington, DE (US)

(*) Notice: Subject to any disclaimer, the term of this patent is extended or adjusted under 35 U.S.C. 154(b) by 19 days.

(21) Appl. No.: **09/738,617**

(22) Filed: **Dec. 15, 2000**

(65) **Prior Publication Data**

US 2001/0048850 A1 Dec. 6, 2001

Related U.S. Application Data

(60) Provisional application No. 60/172,499, filed on Dec. 17, 1999.

(51) **Int. Cl.**[7] **E01C 19/26**; E01C 23/06; E01C 19/22

(52) **U.S. Cl.** **404/84.8**; 404/85; 404/100; 404/101; 404/108

(58) **Field of Search** 404/85, 86, 100, 404/101, 106, 108, 109, 111, 84.8, 84.5, 84.1, 84.05

(56) **References Cited**

U.S. PATENT DOCUMENTS

613,910 A	11/1898	Rich		
1,778,099 A	10/1930	Webb		
1,974,123 A	9/1934	Poulter	61/63	
2,176,891 A	10/1939	Crom	61/63	
2,325,355 A	7/1943	Yost	169/24	
2,331,373 A	10/1943	Campbell	299/57	
2,392,004 A	1/1946	Sherman	212/34	
2,432,417 A	12/1947	Heath	180/14	
2,704,162 A	3/1955	Johnson	214/84	
2,846,813 A	8/1958	Giardina	46/244	

(List continued on next page.)

FOREIGN PATENT DOCUMENTS

DE	2404456 A *	8/1975	E04F/15/20	
DE	3037182	2/1983	B05B/15/08	
DE	3335506 A1	5/1985	E01C/19/00	
EP	400759 A	12/1990	E01C/19/40	
JP	438396 A	2/1992	E21C/9/00	
SU	0260528	12/1969		
WO	WO9300479	1/1993	E01C/23/06	

OTHER PUBLICATIONS

CMI News, CMI Corporation, Oklahoma City, USA, News Special BID–WELL Issue, Spring 1982, *Bid–Well Masters Albuquerque Canal.*

Primary Examiner—Robert E. Pezzuto
Assistant Examiner—Alexandra K. Pechhold
(74) *Attorney, Agent, or Firm*—Van Dyke, Gardner, Linn & Burkhart, LLP

(57) **ABSTRACT**

A concrete placing apparatus is provided for placing uncured concrete on a support surface, such as an elevated deck of a building. The apparatus comprises a base unit and a movable support, with a conduit assembly extending therebetween. A supply end of the conduit assembly is positioned at the base unit and is connected to a supply line for uncured concrete or other material, while a dispensing end of the conduit assembly is supported by the movable support and extends outwardly therefrom to dispense uncured concrete or other material through a discharge outlet. The movable support is movable arcuately and/or radially relative to the base unit to dispense the concrete in a generally uniform manner over a targeted area. The apparatus may further include a screeding device at the discharge outlet to grade, level, compact and smooth the concrete as it is placed.

178 Claims, 53 Drawing Sheets

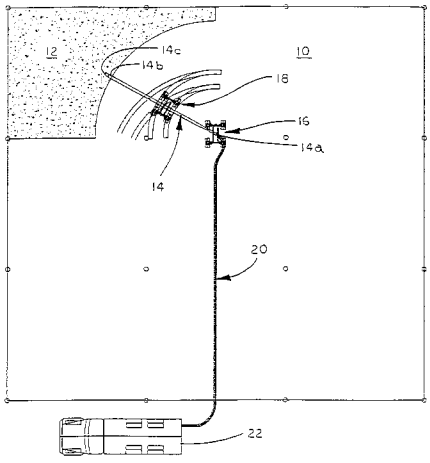

U.S. PATENT DOCUMENTS

2,852,888	A		9/1958	Howard 46/244
3,061,201	A		10/1962	Rienecker 239/281
3,217,620	A		11/1965	Mindrum 94/39
3,324,963	A		6/1967	Stroot et al. 180/6.2
3,374,717	A		3/1968	Reynolds, Jr. 94/45
3,392,641	A		7/1968	Kessel 94/44
3,675,721	A		7/1972	Davidson et al. 169/24
3,744,719	A		7/1973	Wallick 239/199
3,789,869	A		2/1974	Morris 137/351
3,830,325	A		8/1974	Tarter ..... 180/14 A
3,893,780	A		7/1975	Gutman et al. 404/91
3,966,533	A		6/1976	Goldsworthy et al. 156/380
3,979,152	A		9/1976	Morey et al. 302/17
4,007,646	A		2/1977	De Jonge 74/501
4,080,602	A		3/1978	Hattori et al. 343/225
4,162,708	A		7/1979	Johnson 172/4.5
4,222,522	A		9/1980	Kubo et al. 239/160
4,244,123	A		1/1981	Lazure et al. 37/193
4,273,196	A		6/1981	Etsusaki et al. 172/4.5
4,371,287	A		2/1983	Johansson 404/84
4,482,960	A		11/1984	Pryor 364/424
4,519,768	A		5/1985	Murai et al. 425/456
4,557,626	A		12/1985	McKay et al. 404/90
4,655,633	A		4/1987	Somero et al. 404/75
4,690,328	A		9/1987	Roehl 239/227
4,734,021	A		3/1988	Maddock 425/60
4,930,935	A		6/1990	Quenzi et al. 404/75
4,978,246	A		12/1990	Quenzi et al. 404/84
5,009,544	A	*	4/1991	Chaize 404/72
5,039,249	A		8/1991	Hansen et al. 404/84
5,217,320	A		6/1993	Cioffi 404/133.2
5,263,790	A		11/1993	Bickley et al. 404/107
5,328,295	A		7/1994	Allen 404/84.1
5,362,176	A		11/1994	Sovik 404/72
5,393,167	A		2/1995	Fujita et al. 404/84.1
5,419,654	A		5/1995	Kleiger 404/101
5,448,479	A		9/1995	Kemner et al. 364/424.02
5,476,341	A		12/1995	Johnson et al. 404/101
5,556,226	A		9/1996	Hohmann, Jr. 404/84.1
5,570,754	A		11/1996	Stimson 180/234
5,868,156	A		2/1999	Korthaus 137/240

* cited by examiner

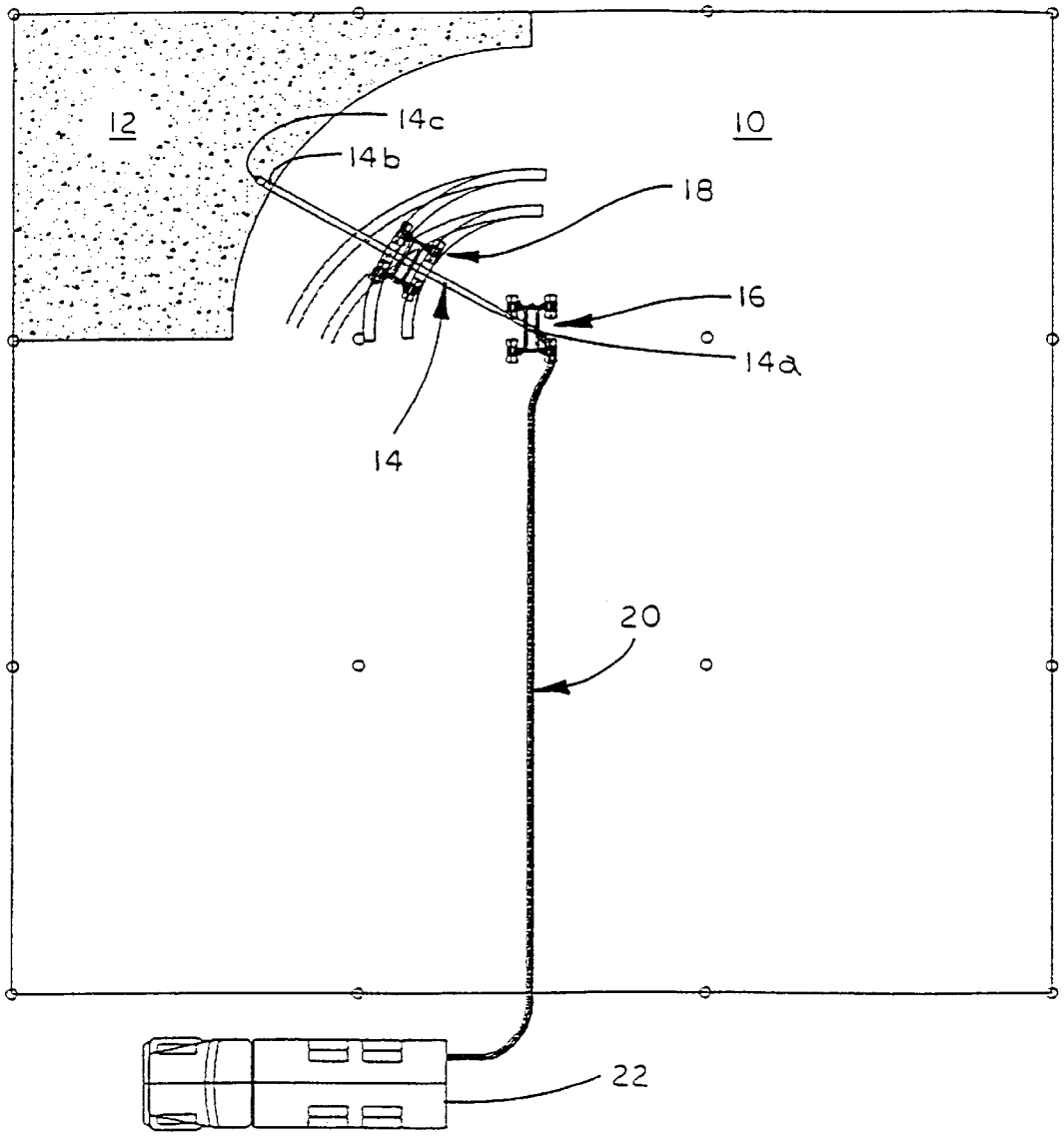

FIG.1

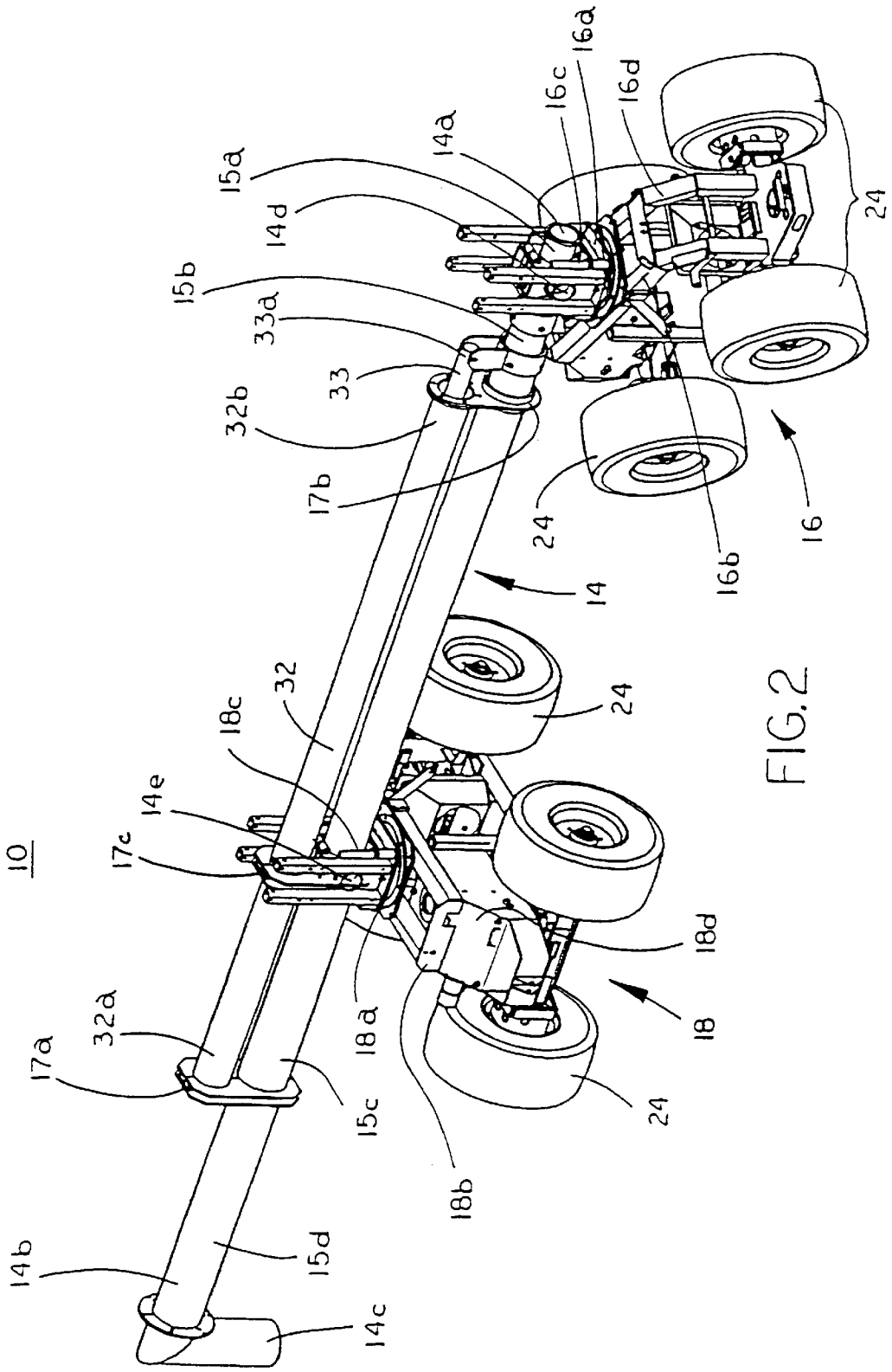
10
14a
14b
14c
14d
14e
15a
15b
15c
15d
16
16a
16b
16c
16d
17a
17b
17c
18
18a
18b
18c
18d
24
32
32a
32b
33
33a

FIG. 2

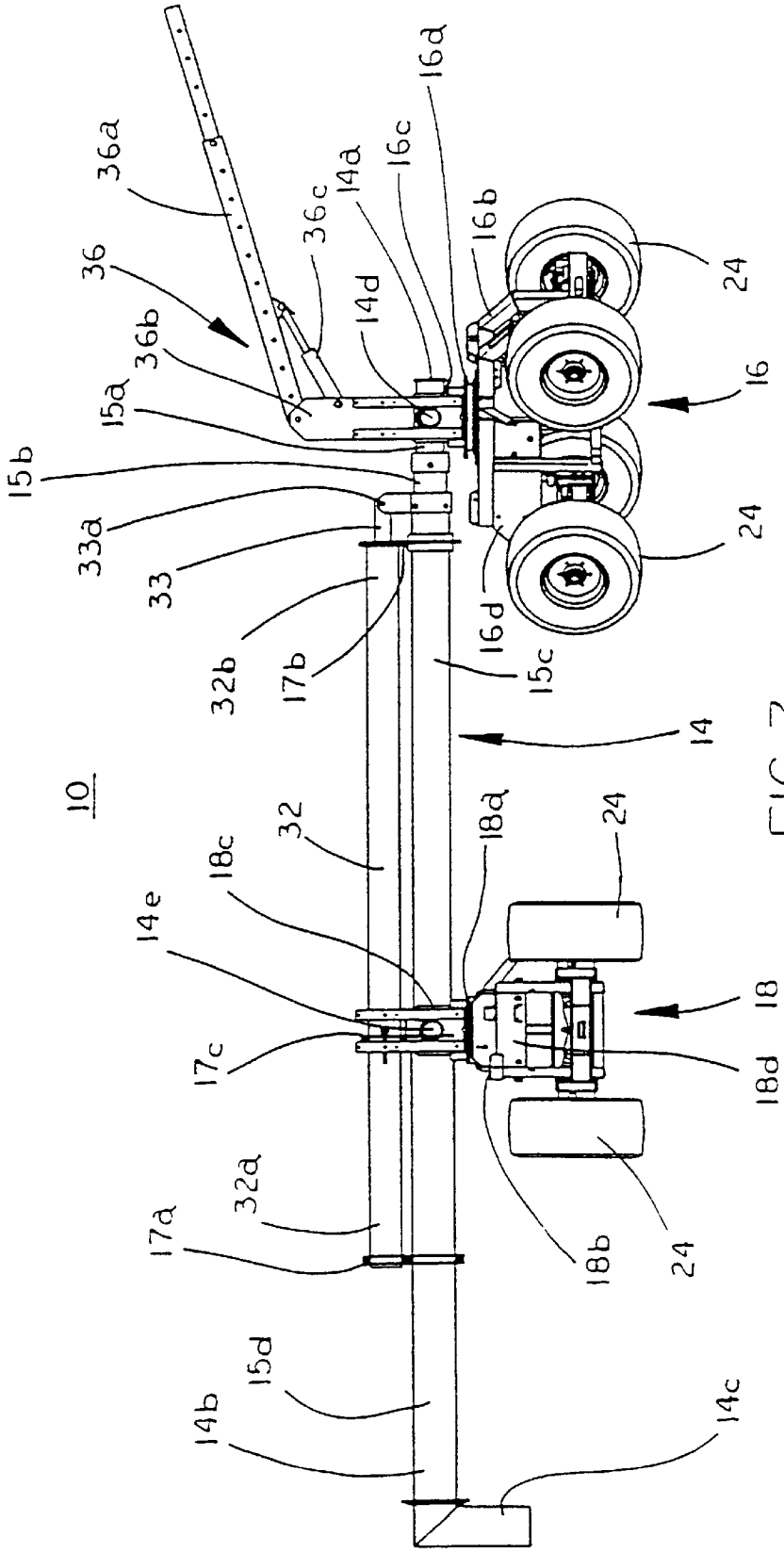
10
36
36a
36b
36c
14a
14d
16a
16b
16c
16d
24
16
15a
15b
15c
15d
33
33a
32
32a
32b
17a
17b
17c
14
14b
14c
14e
18
18a
18b
18c
18d

FIG. 3

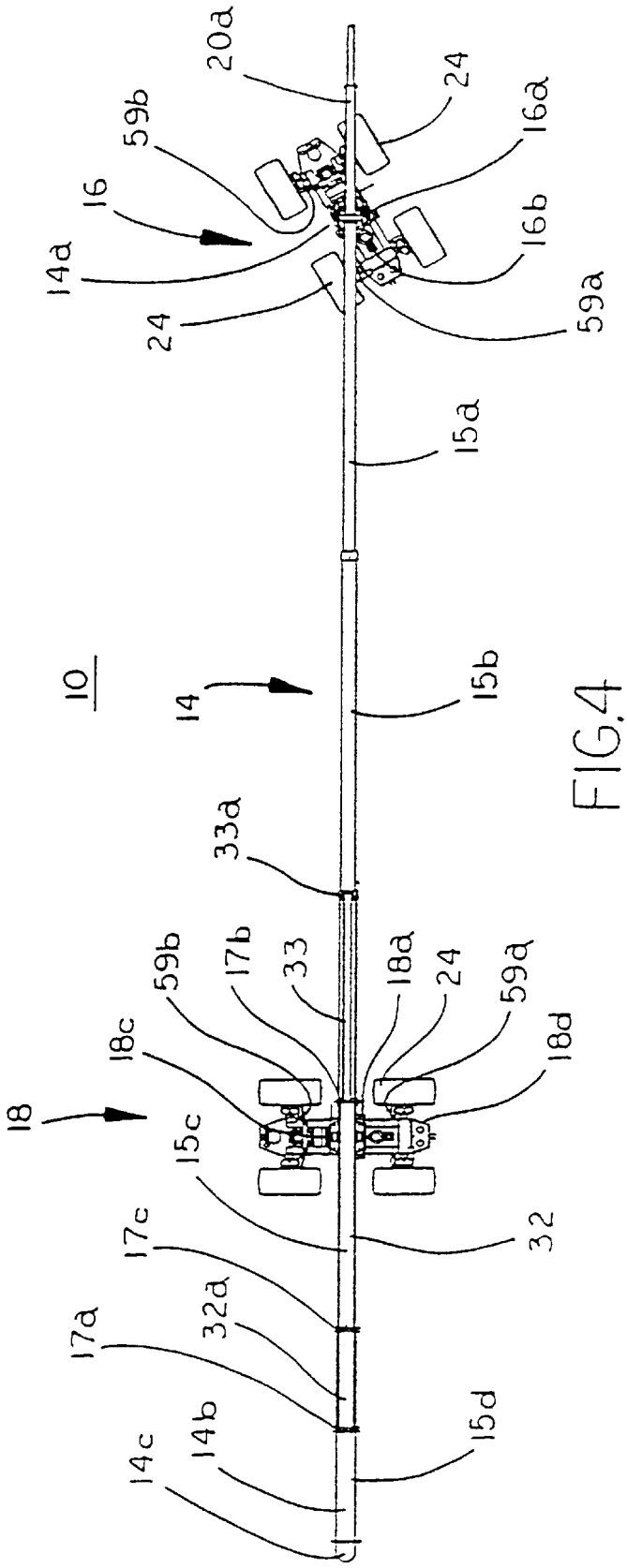
10
14
14a
14b
14c
15a
15b
15c
15d
16
16a
16b
17a
17b
17c
18
18a
18c
18d
20a
24
32
32a
33
33a
59a
59b

FIG.4

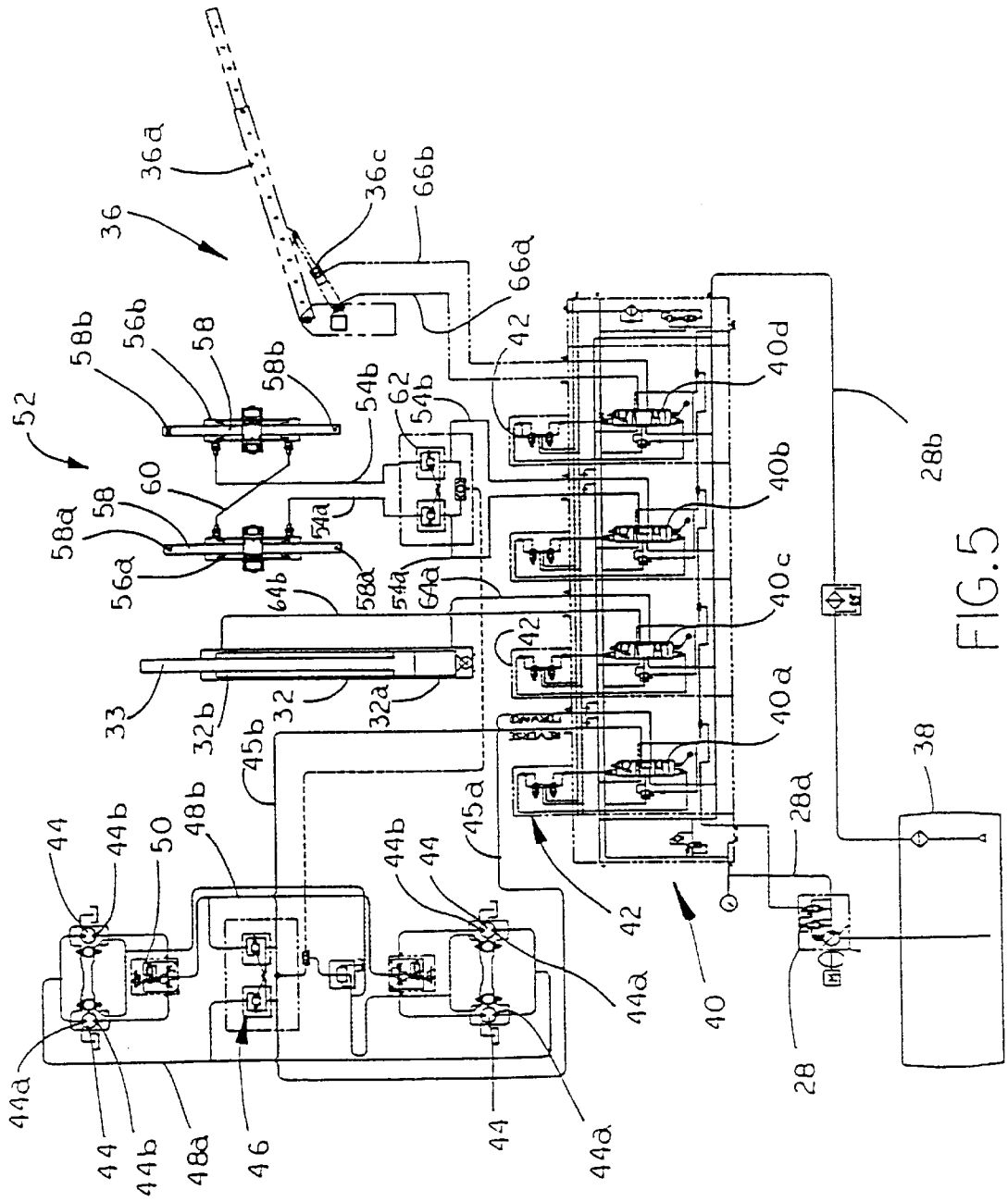
36a
36
36c
66b
66a
42
40d
40b
40c
40a
28b
28a
38
28
40
52
58b
56b
58
58b
54b
62
54b
60
58a
58
54a
56a
58a
54a
64a
64b
33
32b
32
32a
45b
45a
44
44b
50
48b
44b
44
44a
44a
44
44b
48a
46
44
44a

FIG. 5

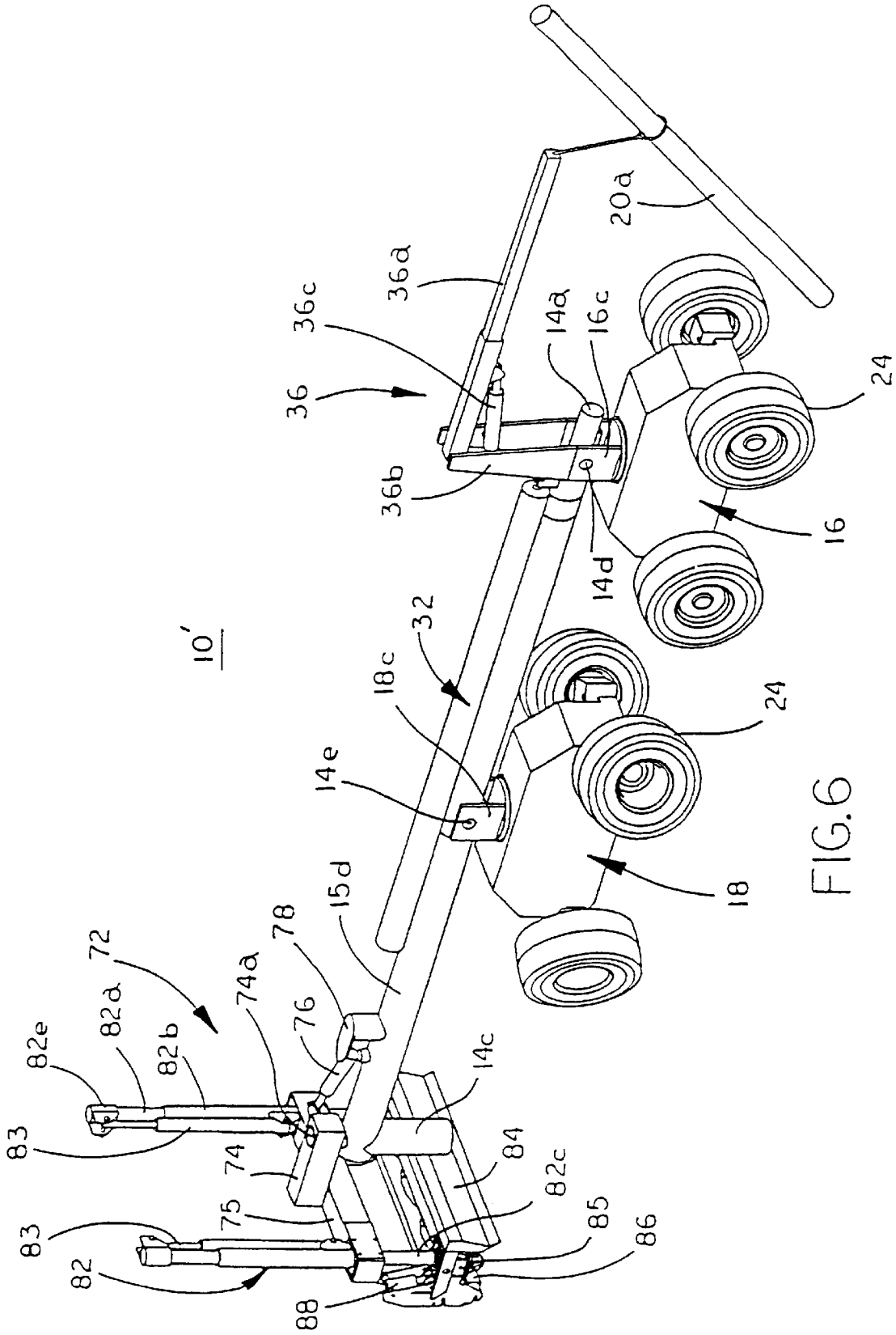
10'
20a
36a
36c
36
14a
16c
24
36b
16
14d
32
18c
24
14e
18
15d
78
72
74a
76
82e
82d
82b
14c
83
74
84
82c
75
85
83
86
82
88

FIG.6

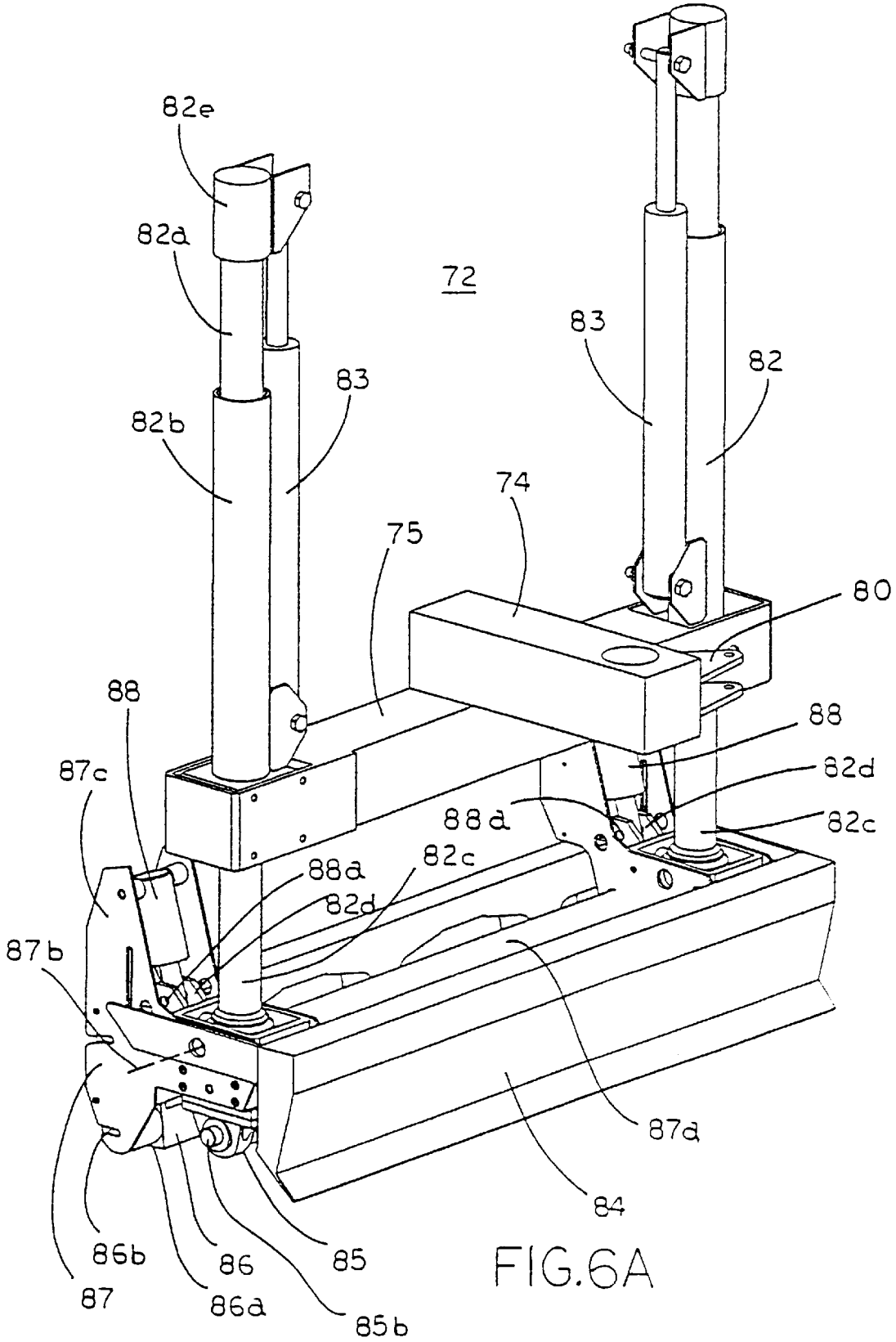
82e
82a
72
83
82
83
82b
74
75
80
88
88
87c
82d
88d
82c
88a
82c
82d
87b
87d
84
86b
86
85
87
86a
85b

FIG.6A

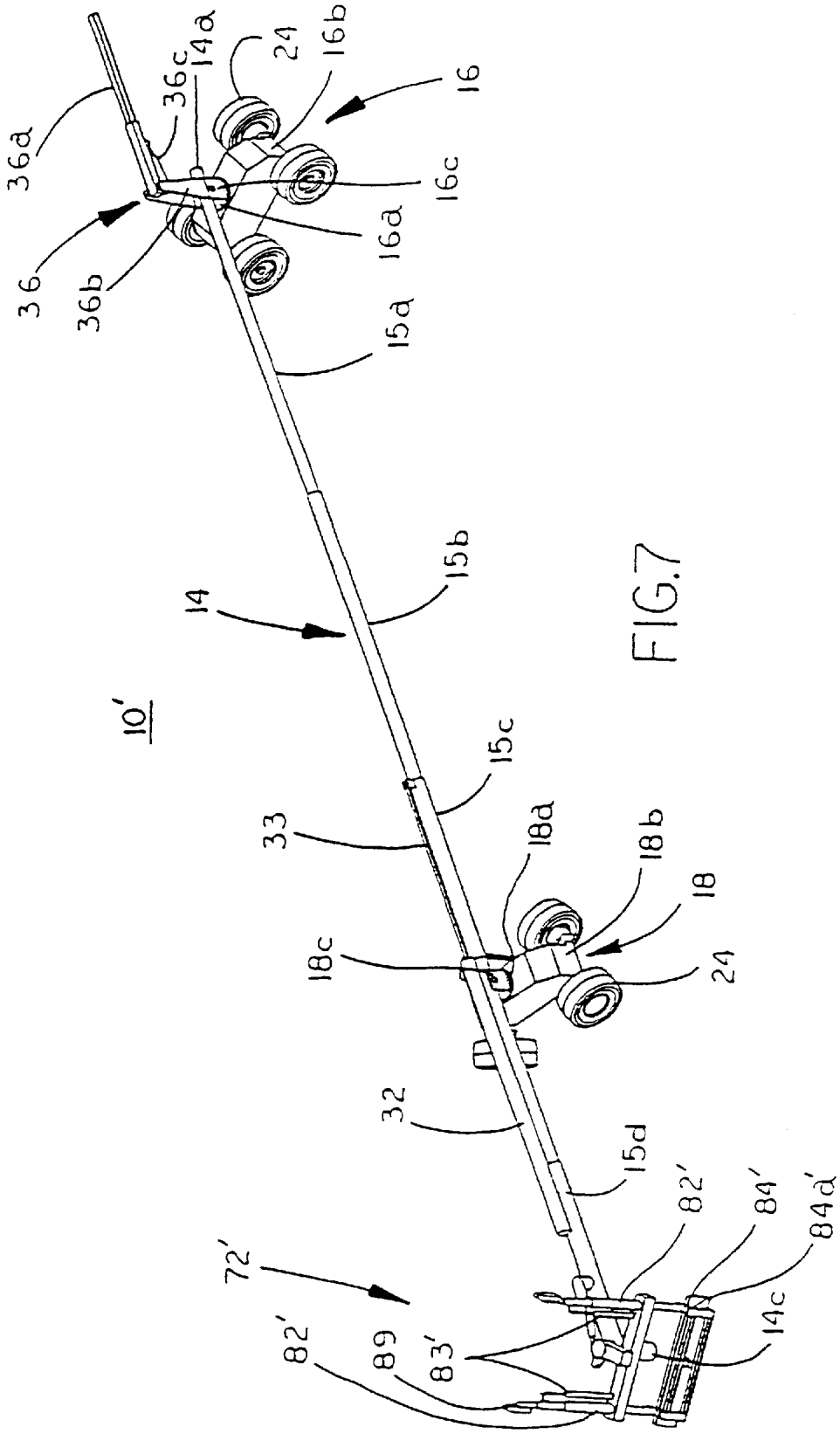
36d
36c
14a
24
16b
16
36
36b
16c
16a
15a
14
15b
10'
15c
33
18a
18b
18
18c
24
32
15d
72'
82'
89
83'
82'
84'
84a'
14c

FIG.7

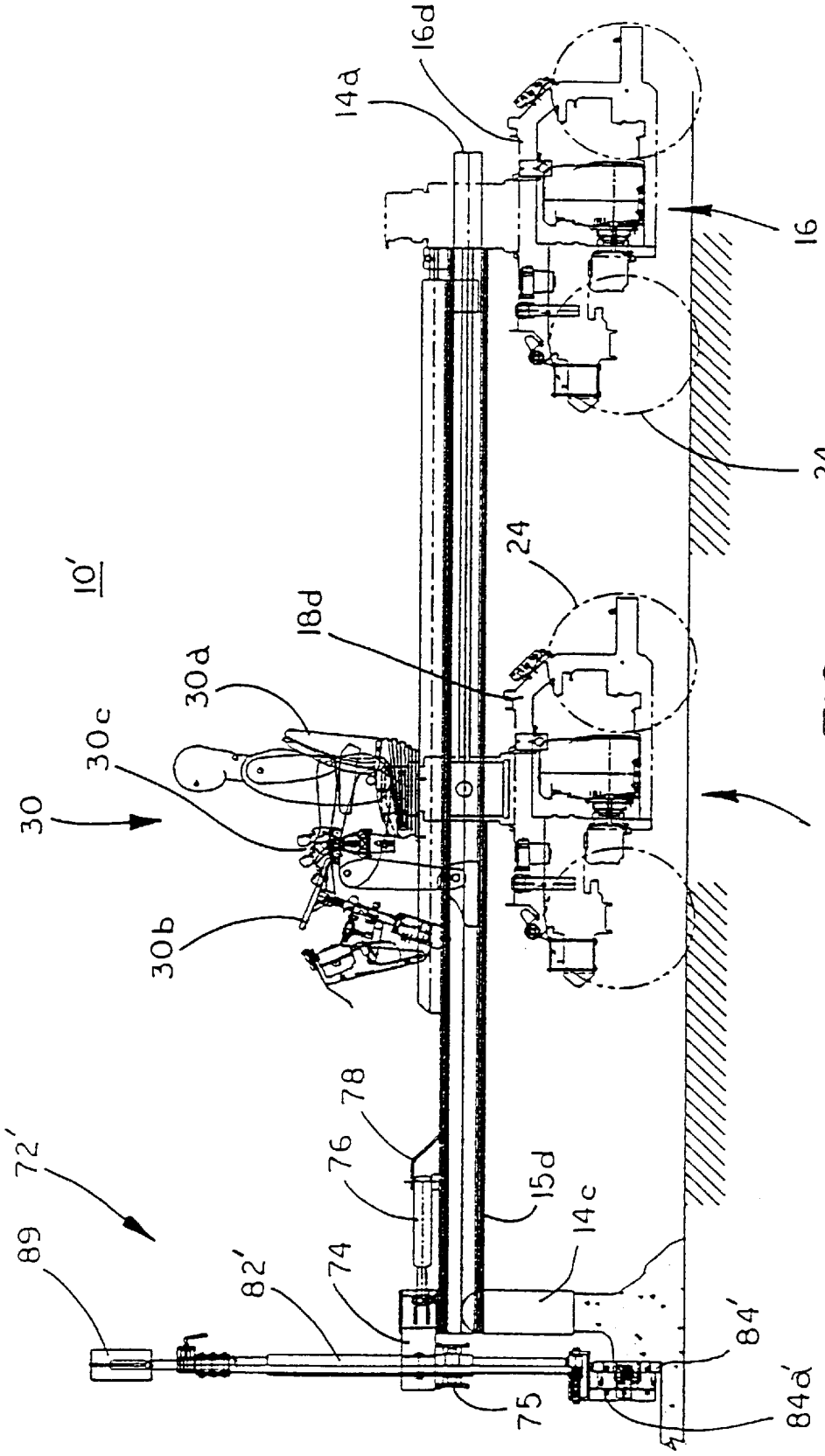
10'
30
30a
30b
30c
14a
16d
16
24
24
18d
18
78
76
15d
14c
72'
89
82'
74
75
84'
84a'

FIG.8

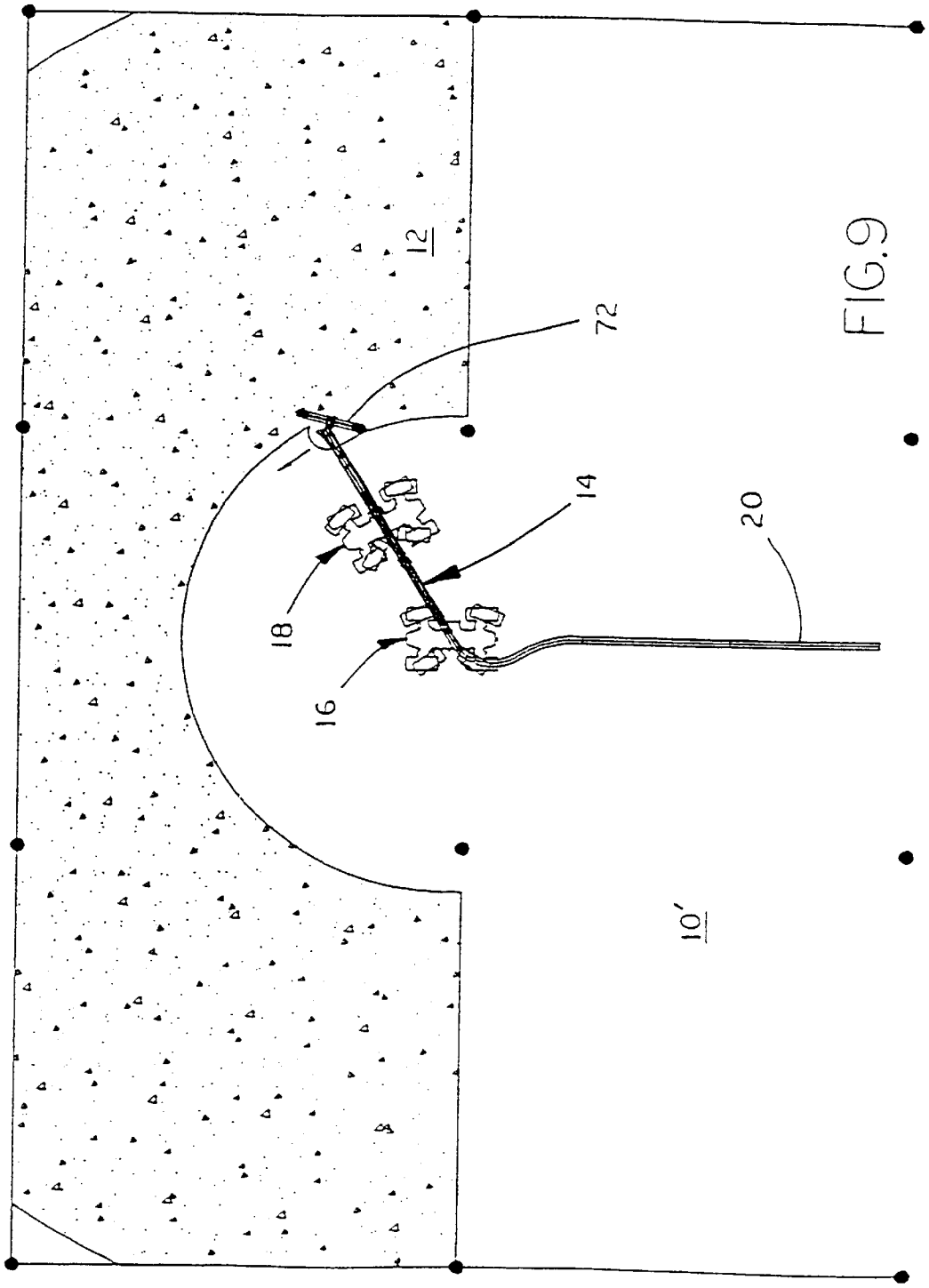

FIG.9

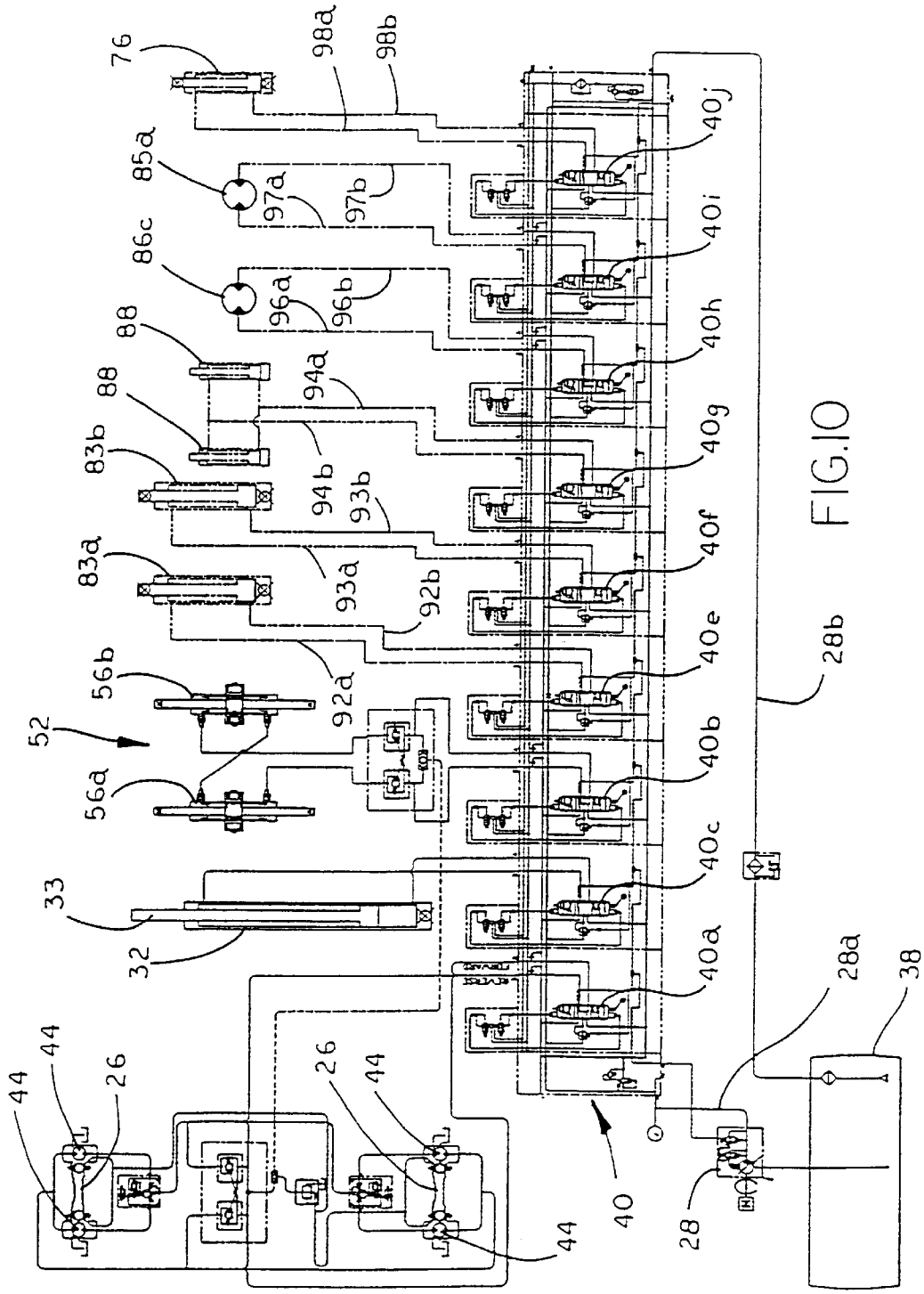
76
98a
98b
85a
97a
97b
86c
96a
96b
88
88
94a
83b
94b
93b
83a
93a
92b
56b
92a
52
56a
33
32
44
44
26
26
44
44
40
40j
40i
40h
40g
40f
40e
40b
40c
40a
28b
28a
38
28

FIG.10

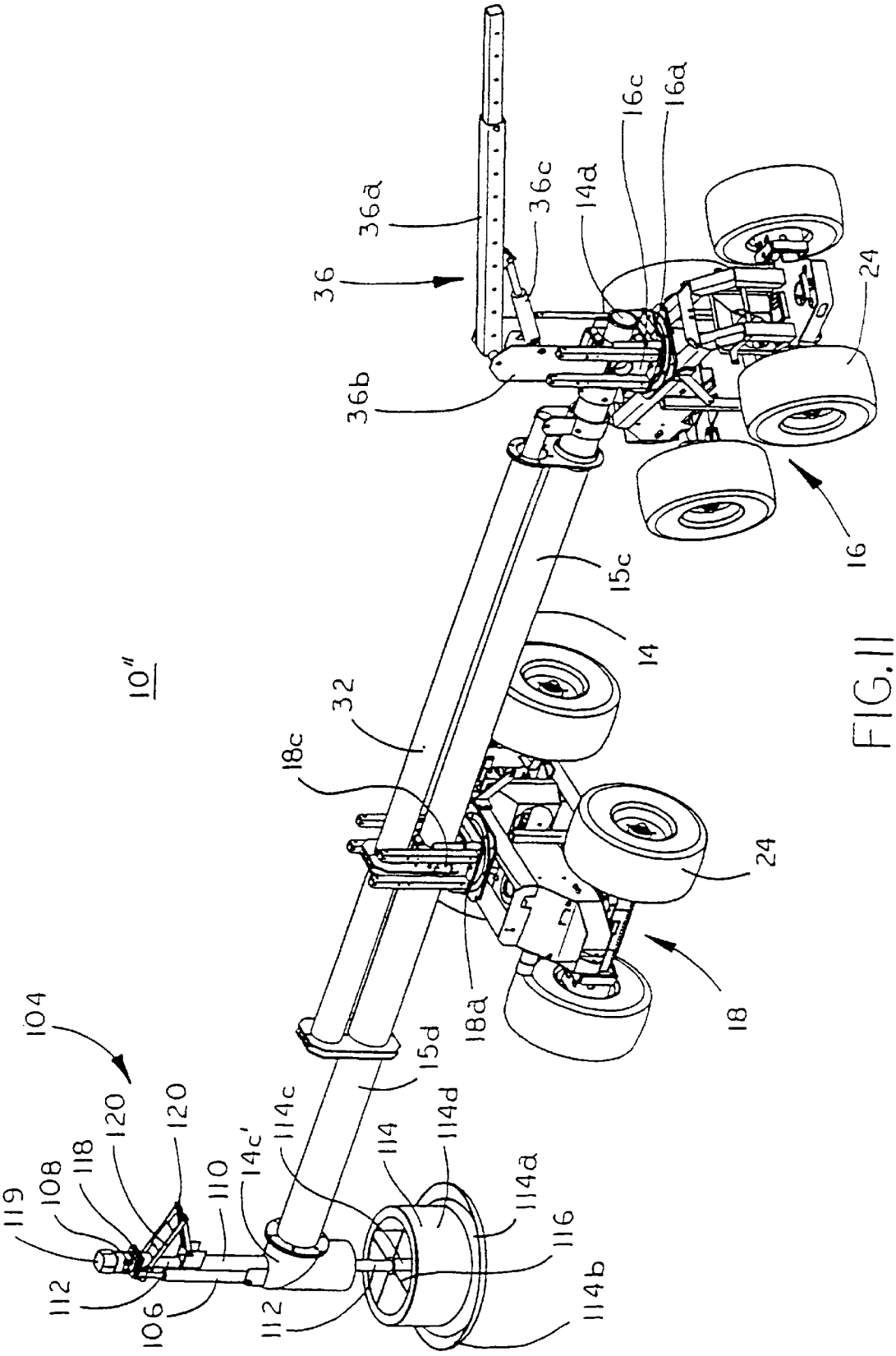
10"
36
36a
36b
36c
14a
16c
16a
24
16
15c
14
32
18c
24
18
18a
15d
104
119
108
118
120
120
110
14c'
114c
112
106
112
114
114d
114a
116
114b

FIG. 11

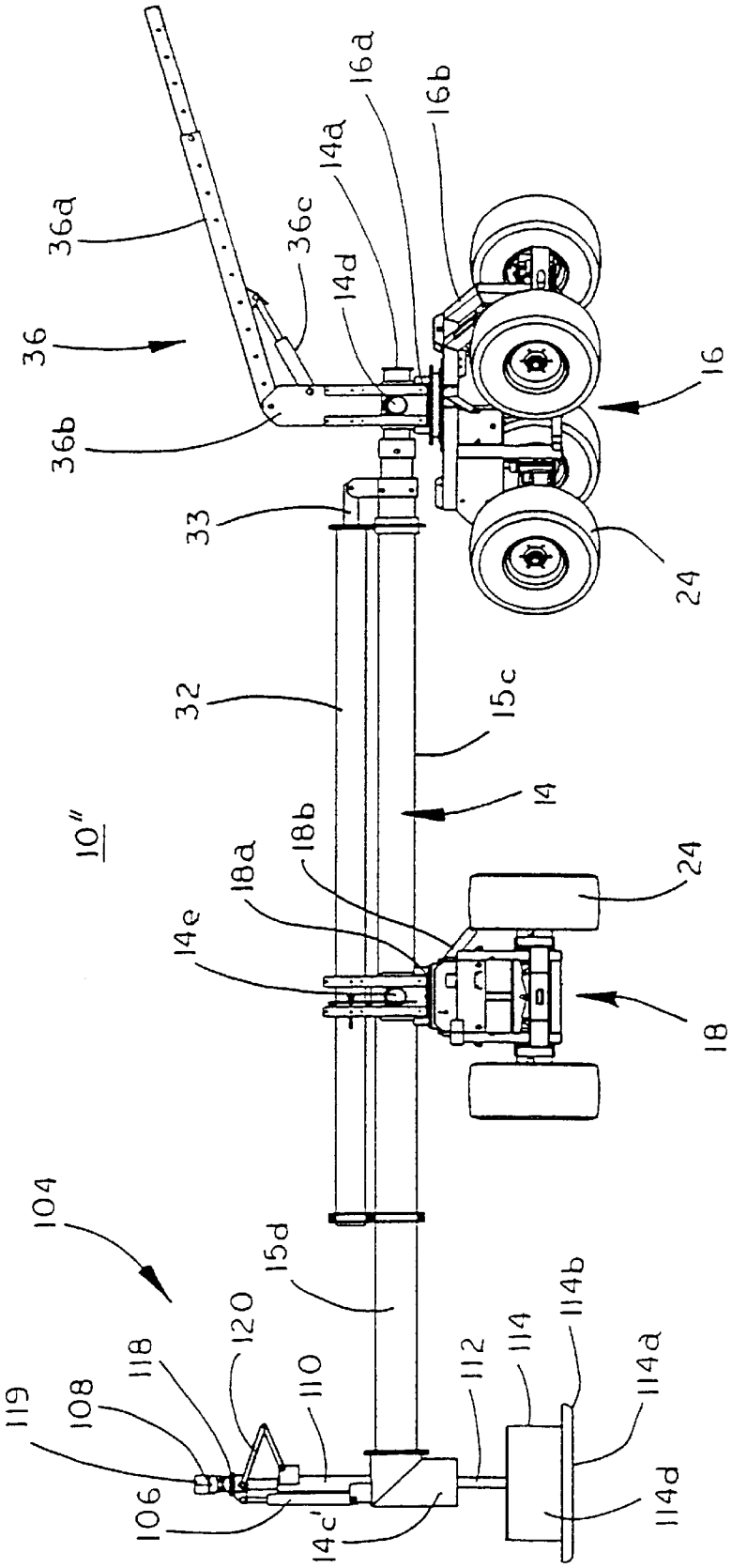
36a
36
36b
36c
14d
14a
16a
16b
16
33
24
32
15c
14
10"
18b
18a
14e
24
18
104
15d
119
108
118
120
110
106
14c'
112
114
114b
114a
114d

FIG. 12

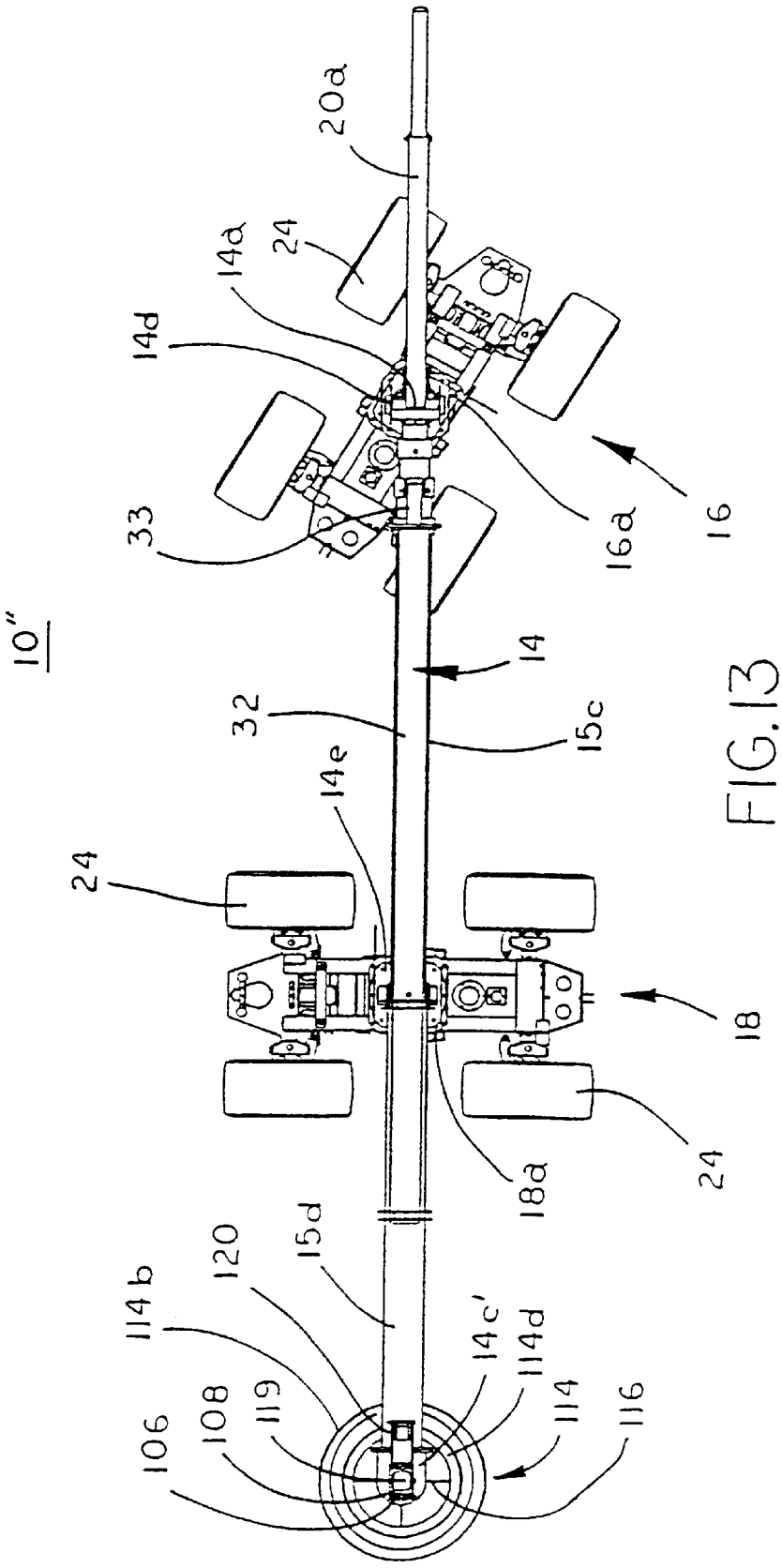
10''
20a
24
14a
14d
33
16a
16
14
32
15c
14e
24
18
18a
24
15d
120
114b
14c'
114d
114
116
108
119
106

FIG. 13

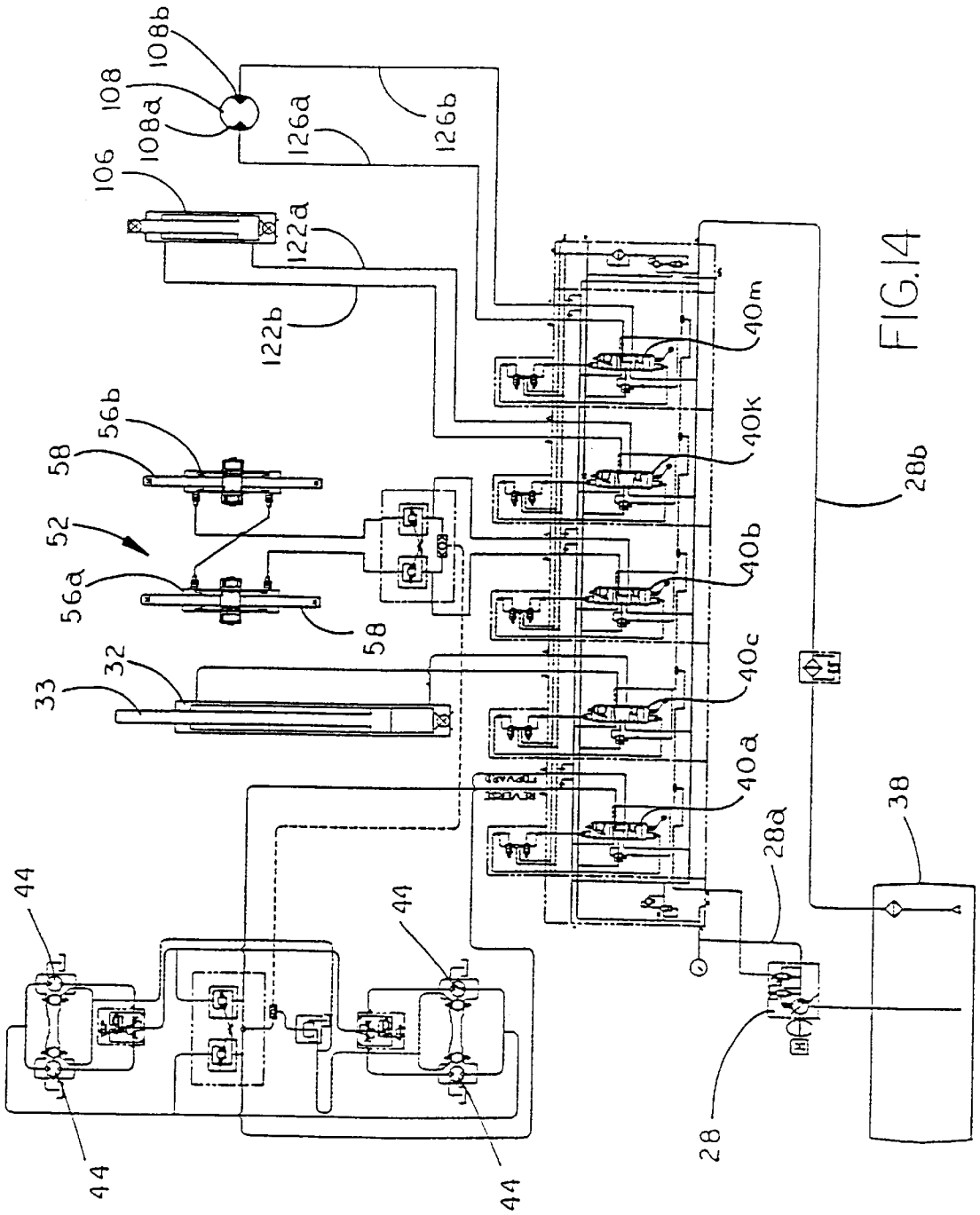
108b
108
108a
106
126a
126b
122a
122b
56b
58
52
56a
58
32
33
44
44
44
44
40m
40k
40b
40c
40a
28b
28a
28
38

FIG. 14

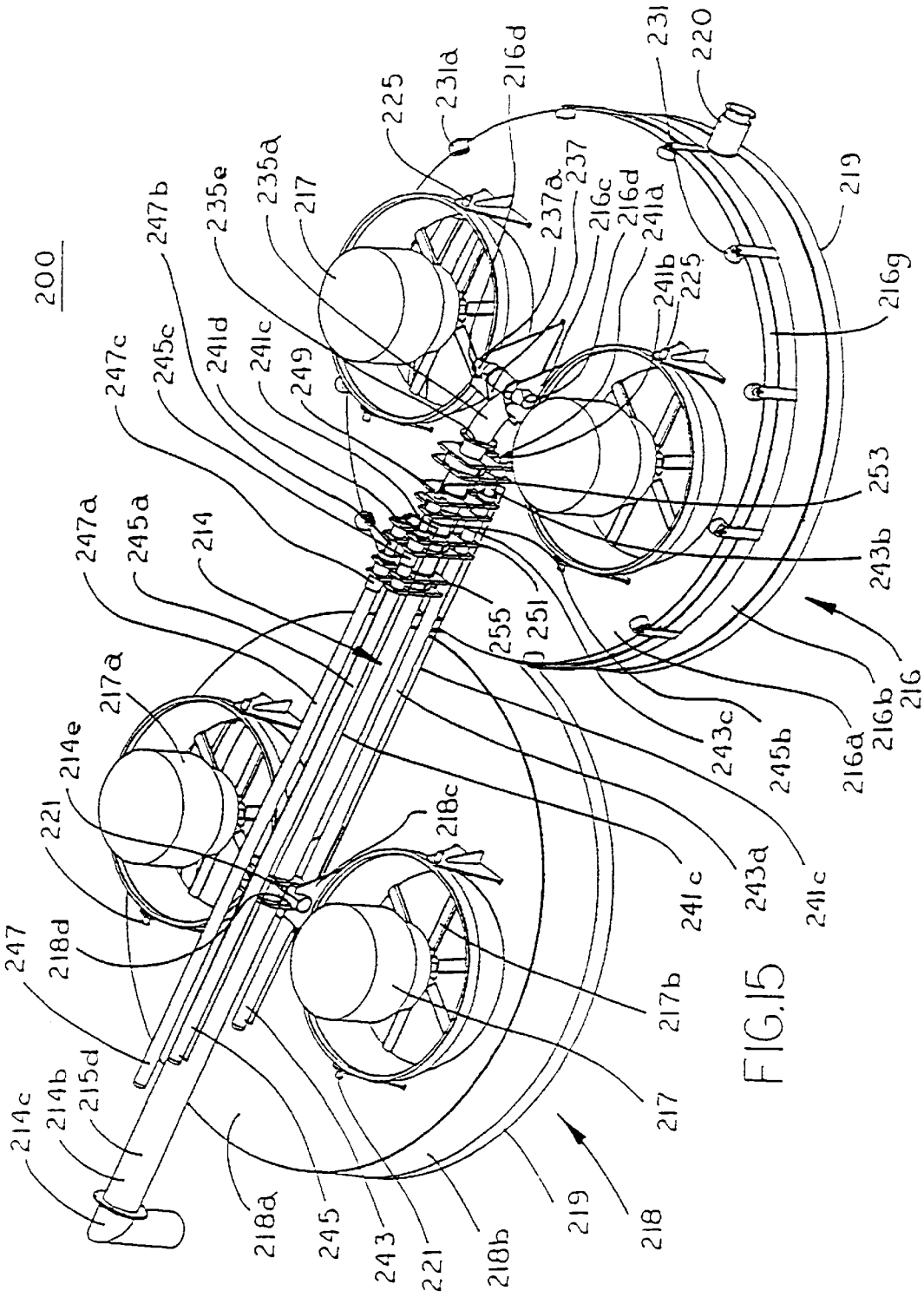
200
214c
214b
215d
247
218d
221
214e
217a
247a
245a
214
247c
245c
247b
241d
241c
249
235e
235a
217
225
231a
216d
231
220
237
237a
216c
216d
241a
241b
225
219
216g
253
243b
216
216b
216a
245b
243c
241c
243a
241c
217b
217
218
219
218b
221
243
245
218a
218c
255
251

FIG.15

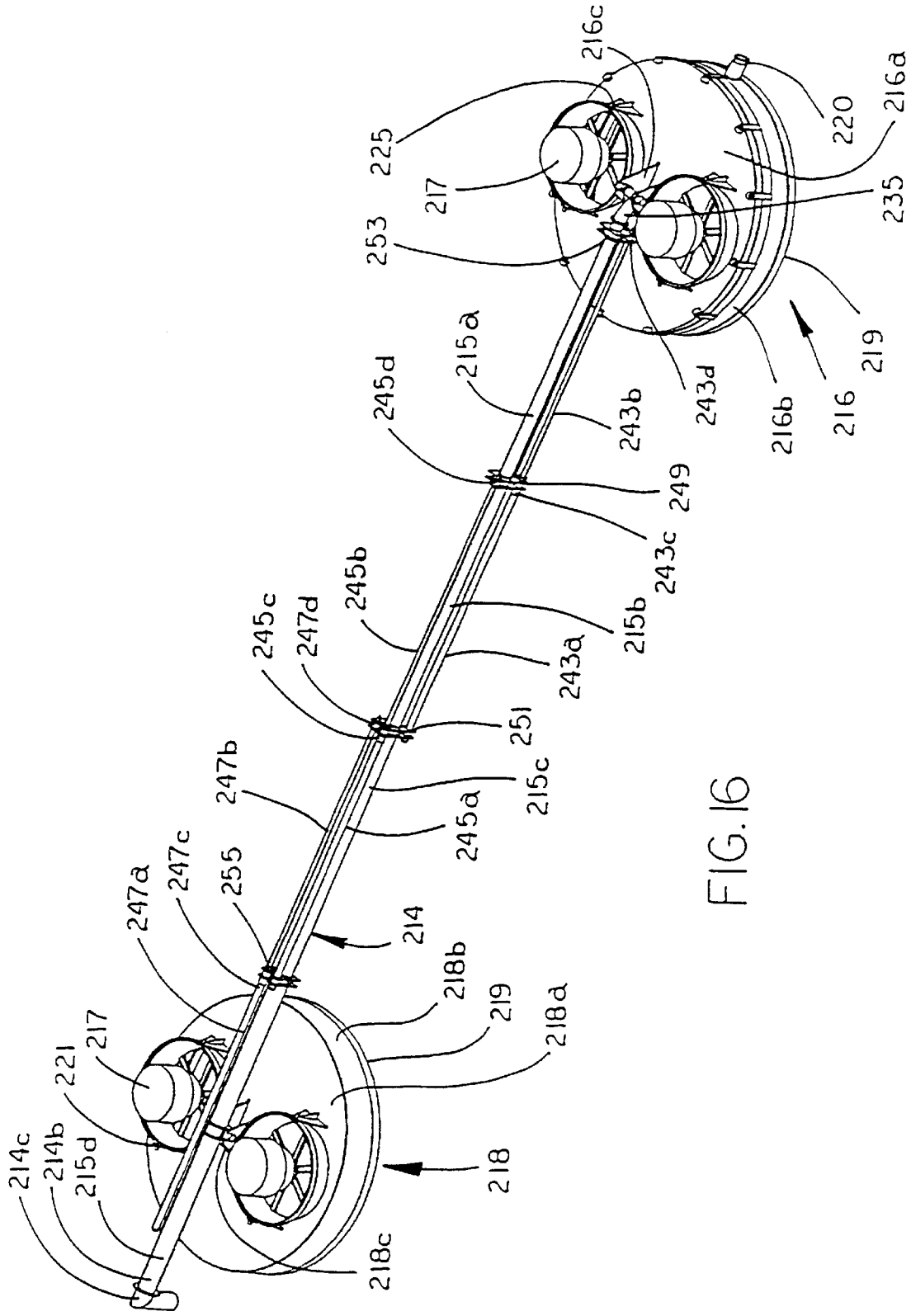
216c
225
217
253
220
216a
235
219
216
216b
243d
215a
245d
243b
249
243c
245b
215b
245c
247d
243a
251
247b
215c
245a
247a
247c
255
214
218b
219
218a
217
221
214c
214b
215d
218
218c

FIG. 16

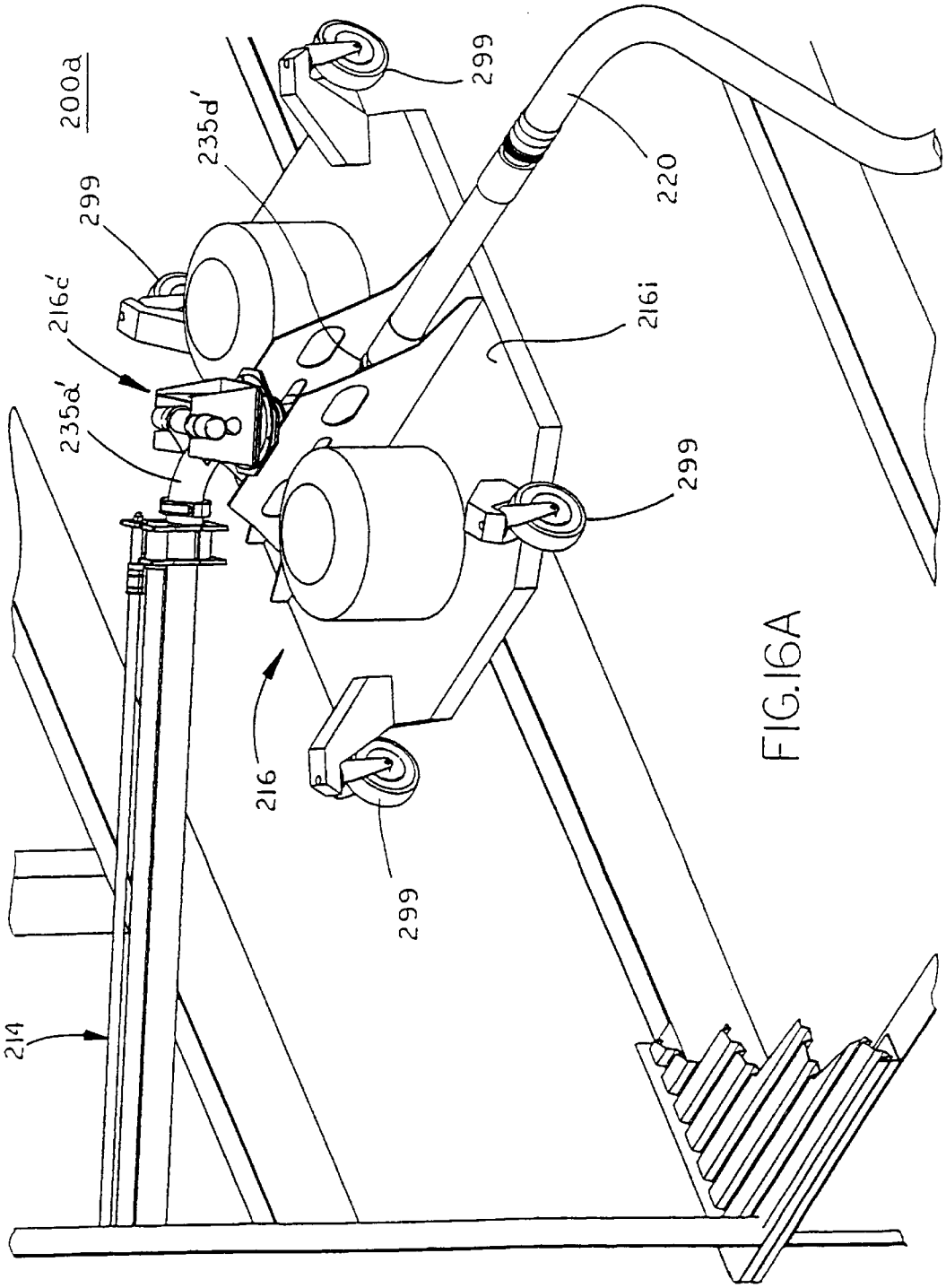

FIG.16A

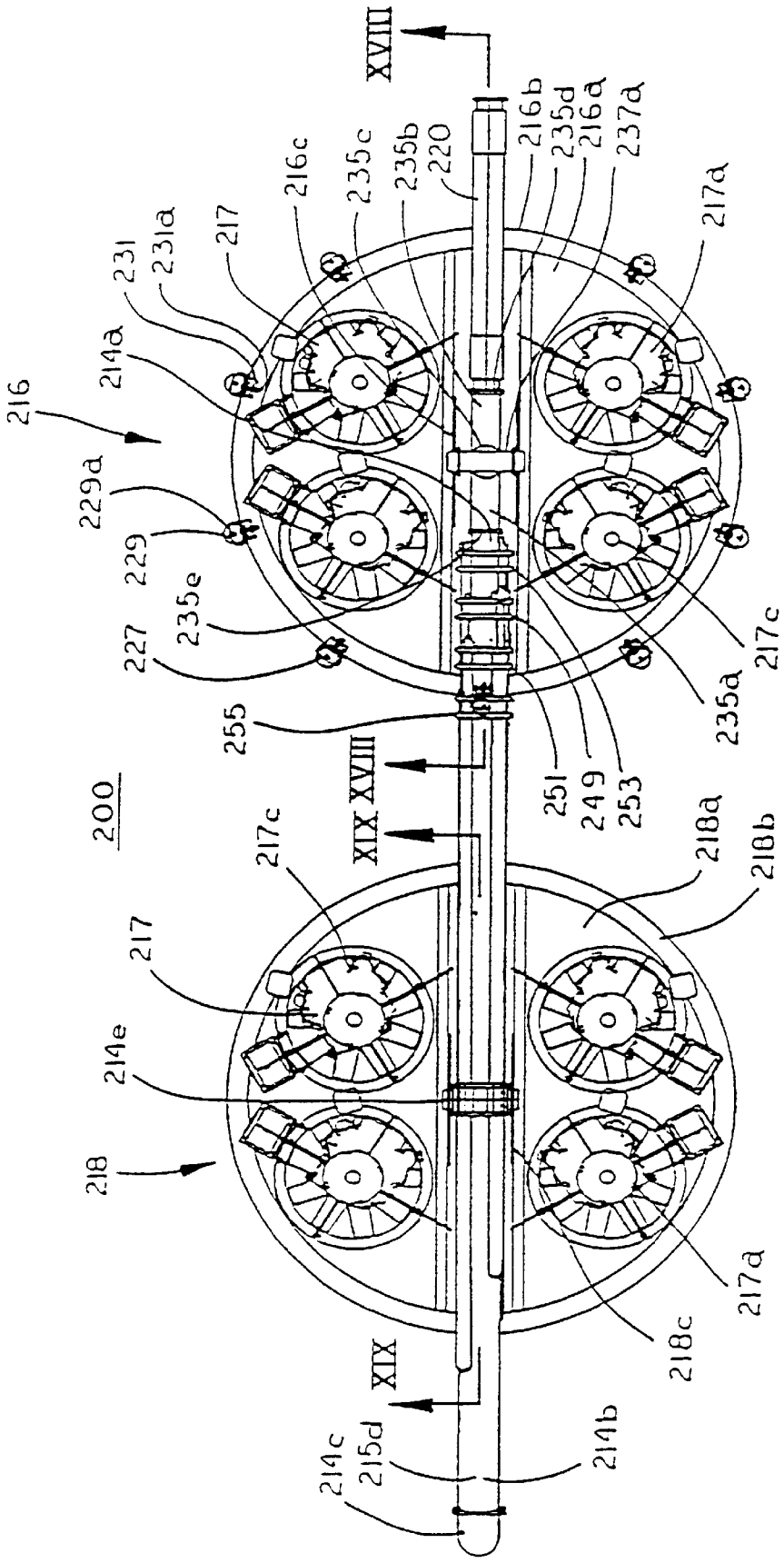
XVIII
216b
235d
216a
237a
220
235b
235c
216c
217
231a
231
214a
216
229a
229
235e
227
217a
217c
235a
255
251
249
253
XIX XVIII
200
217c
218a
218b
217
214e
218
217a
218c
XIX
214c
215d
214b

FIG.17

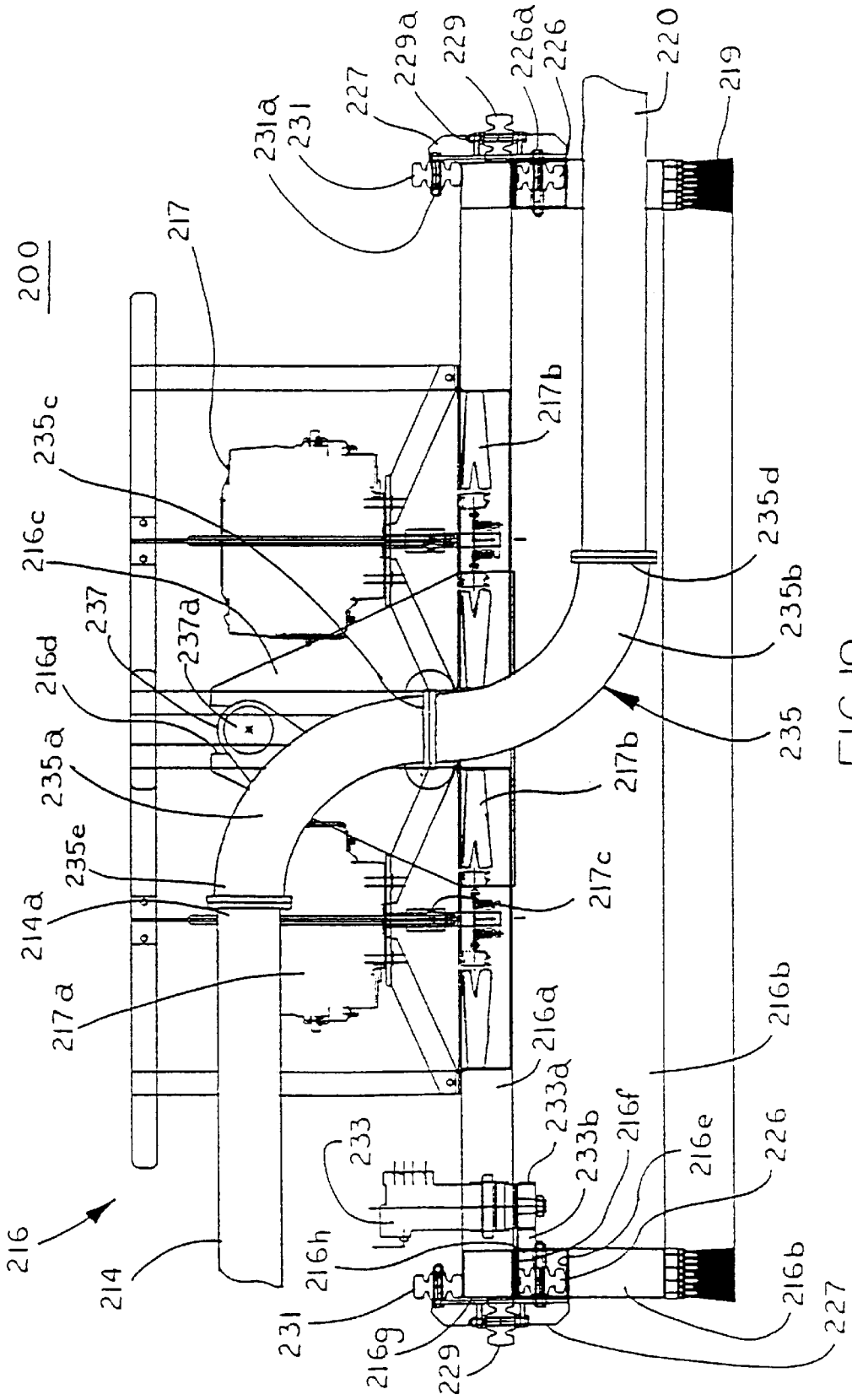
200
217
231a
231
227
229a
229
226a
226
220
219
217b
235c
216c
237
237a
216d
235a
235e
214a
217a
235d
235b
235
217b
217c
216a
216b
233a
233
233b
216f
216e
226
216h
216
214
231
216g
229
216b
227

FIG.18

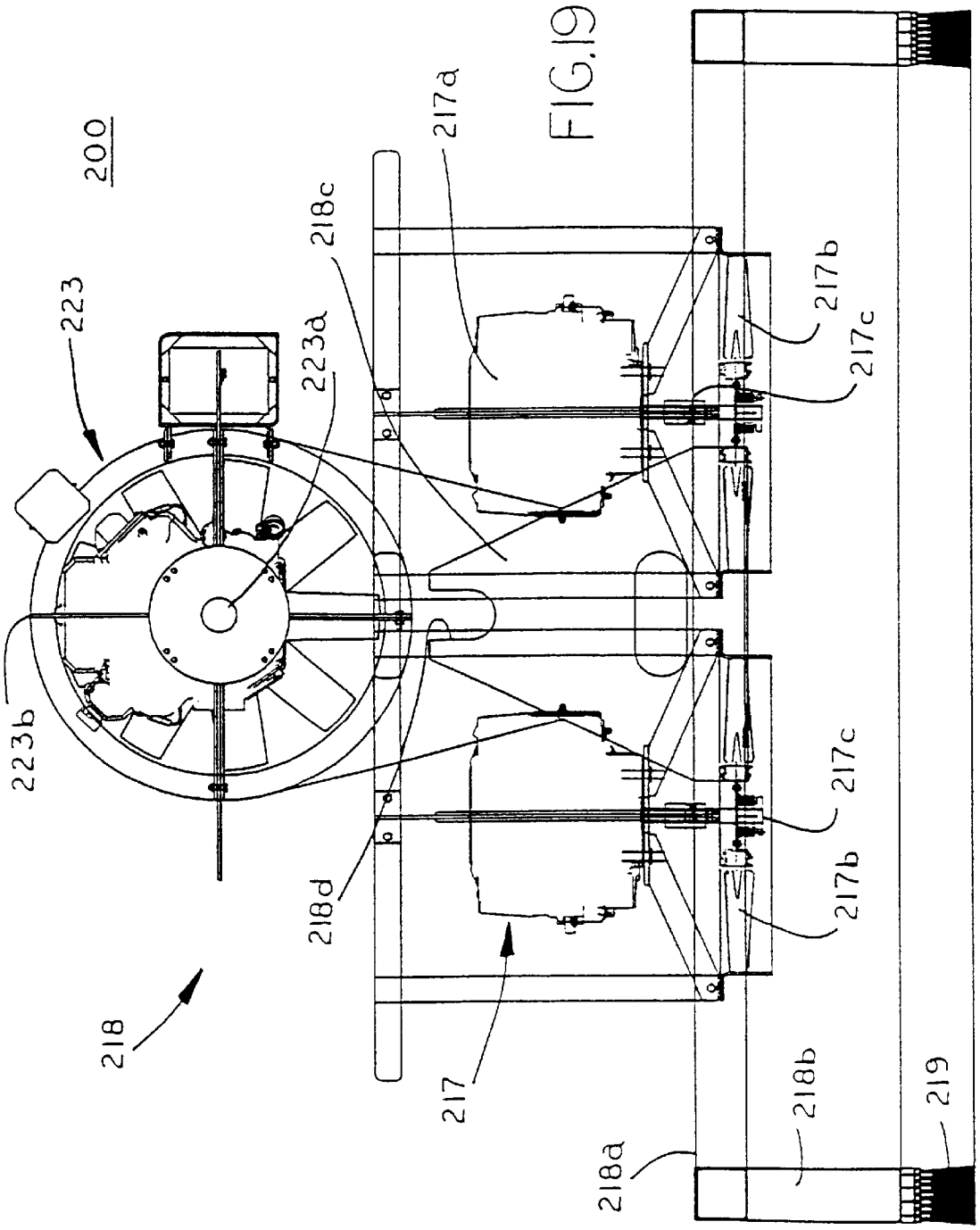
200
223
223b
223a
218c
218d
218
217a
217
217b
217c
217c
217b
218a
218b
219

FIG.19

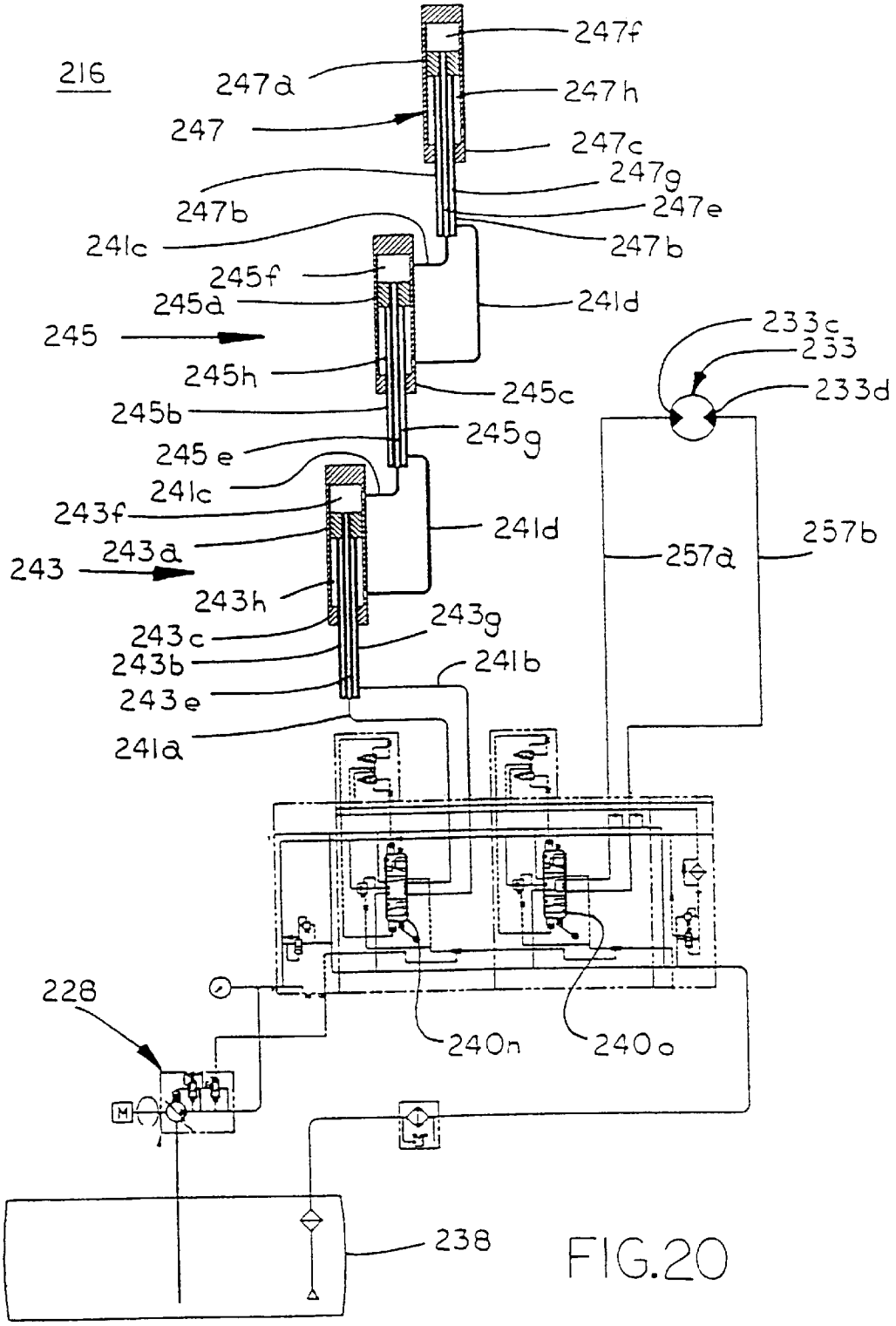
216
247f
247a
247h
247
247c
247g
247b
247e
241c
247b
245f
245a
241d
245
233c
233
245h
245c
233d
245b
245g
245 e
241c
243f
241d
243a
257b
243
257a
243h
243g
243c
243b
241b
243e
241a
228
240n
240o
M
238

FIG.20

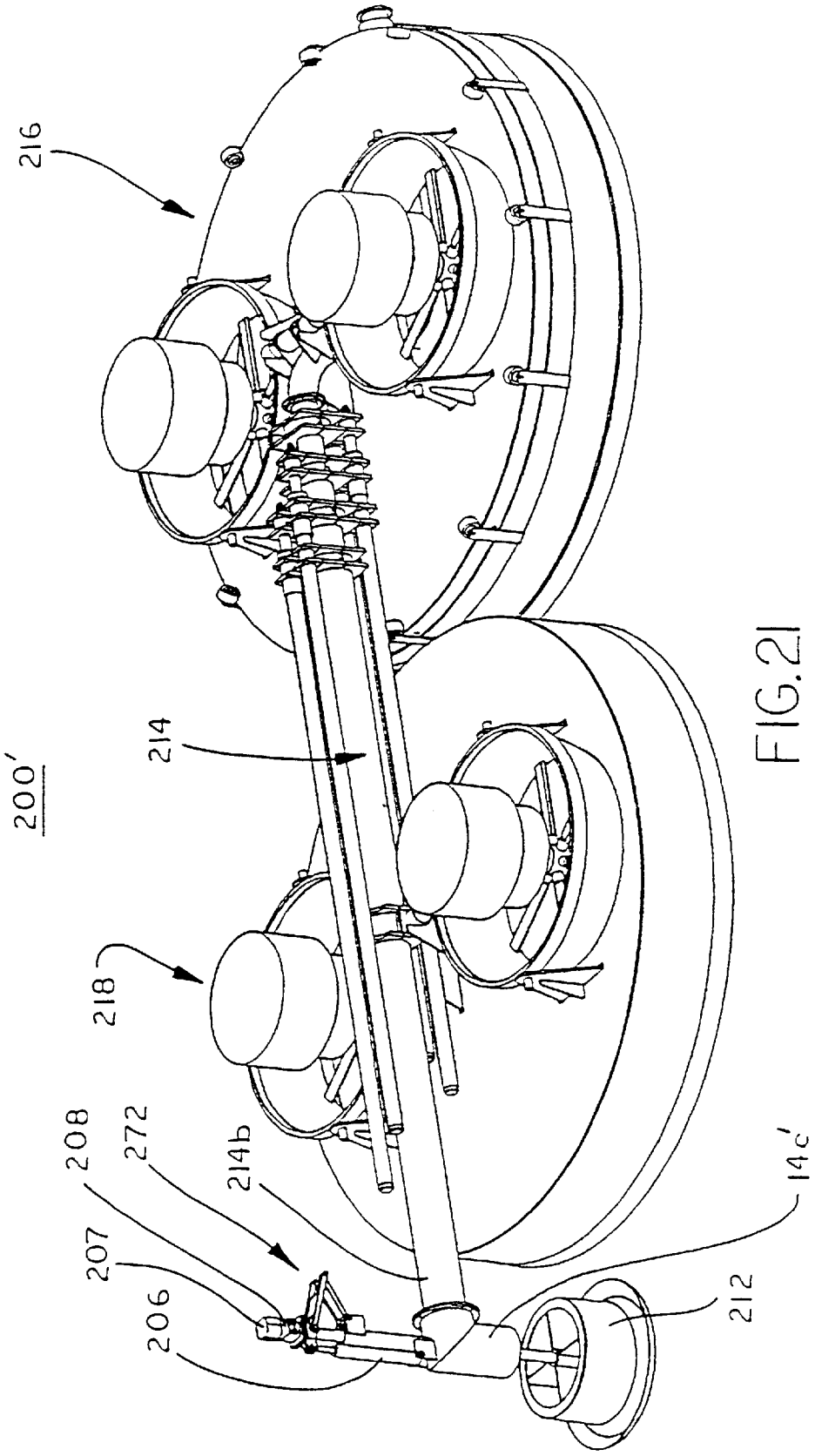

FIG.21

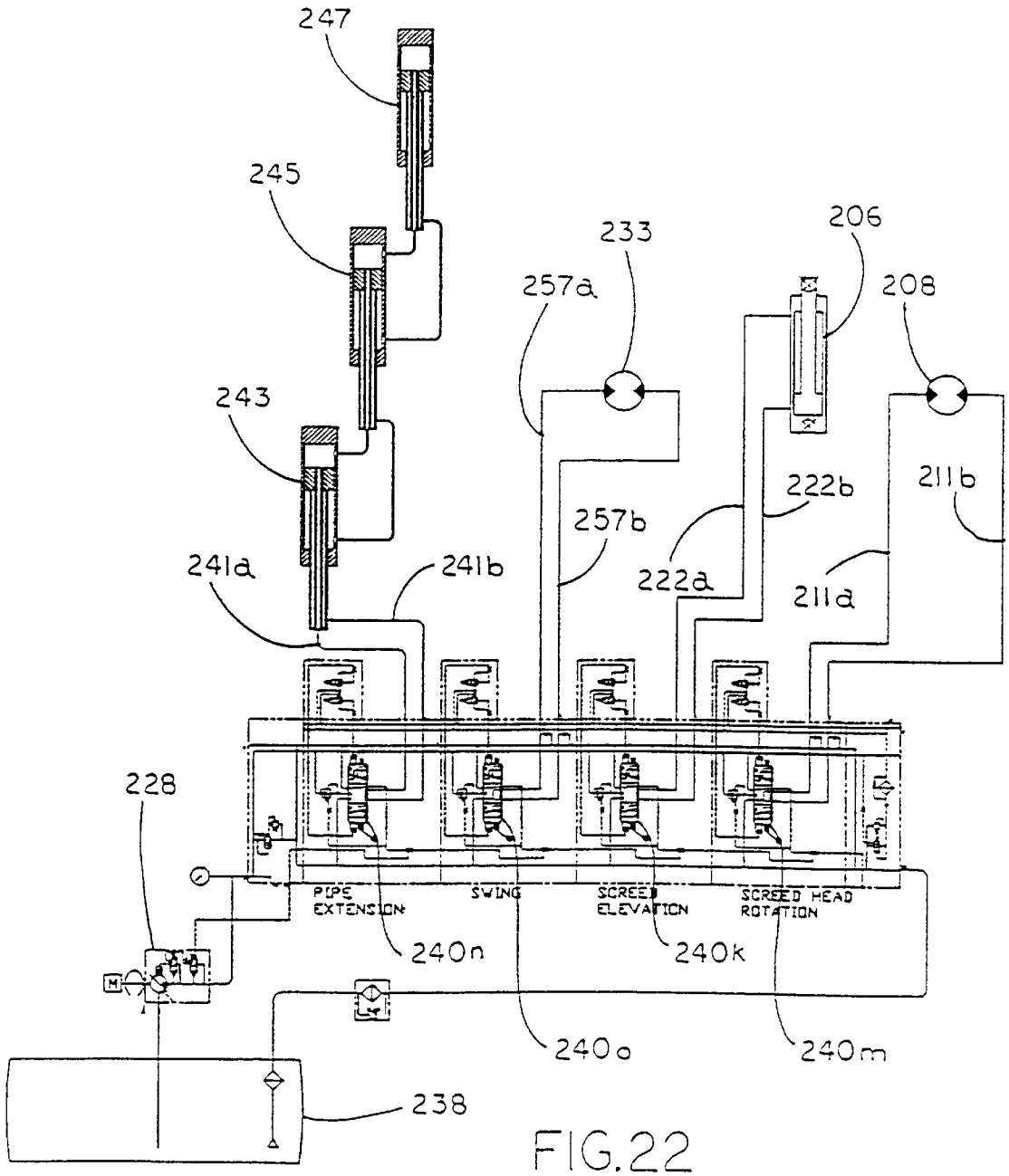
247
245
243
233
206
208
257a
257b
222b
222a
211b
211a
241a
241b
228
PIPE EXTENSION
SWING
SCREED ELEVATION
SCREED HEAD ROTATION
240n
240k
240o
240m
238

FIG.22

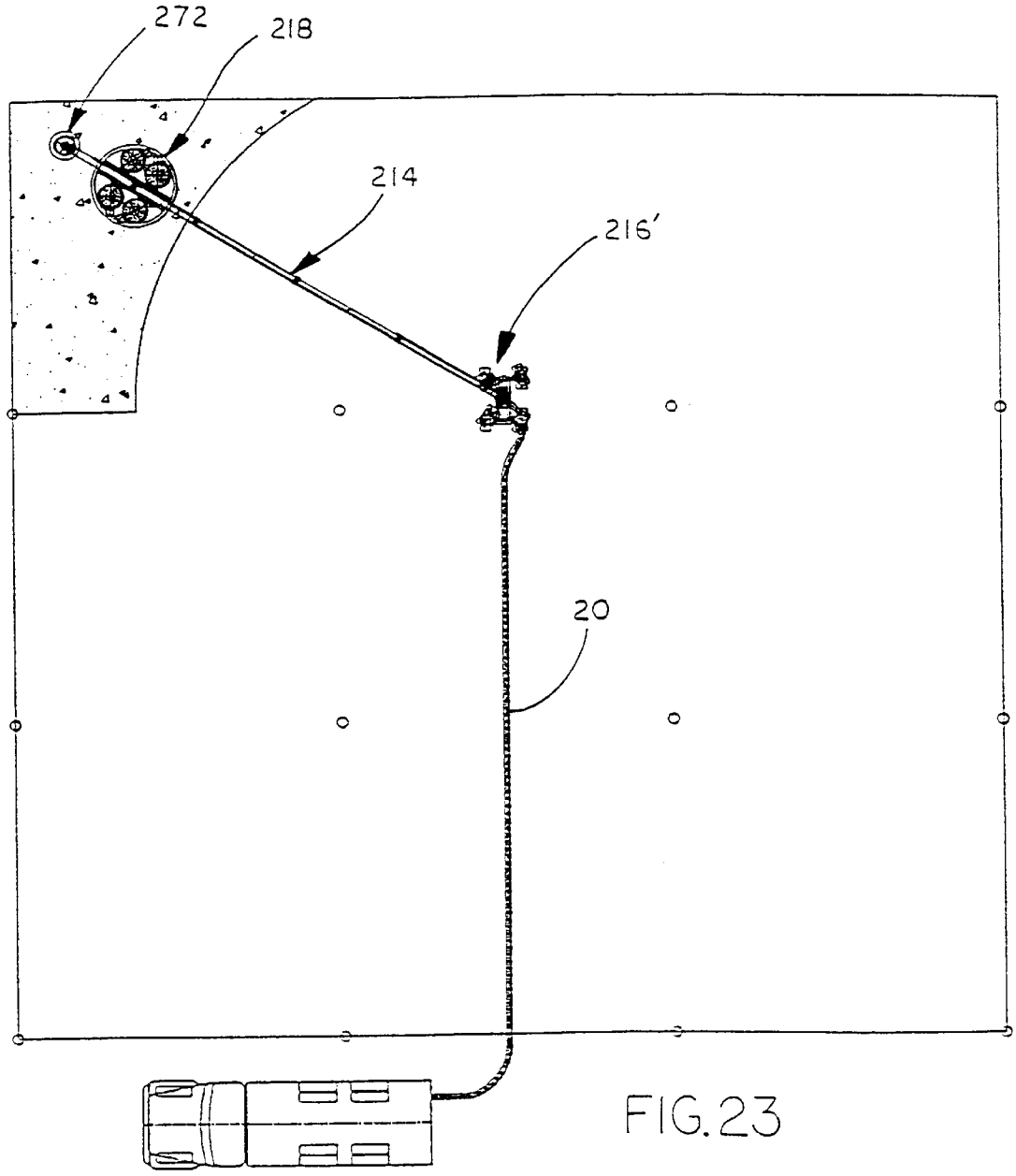

FIG. 23

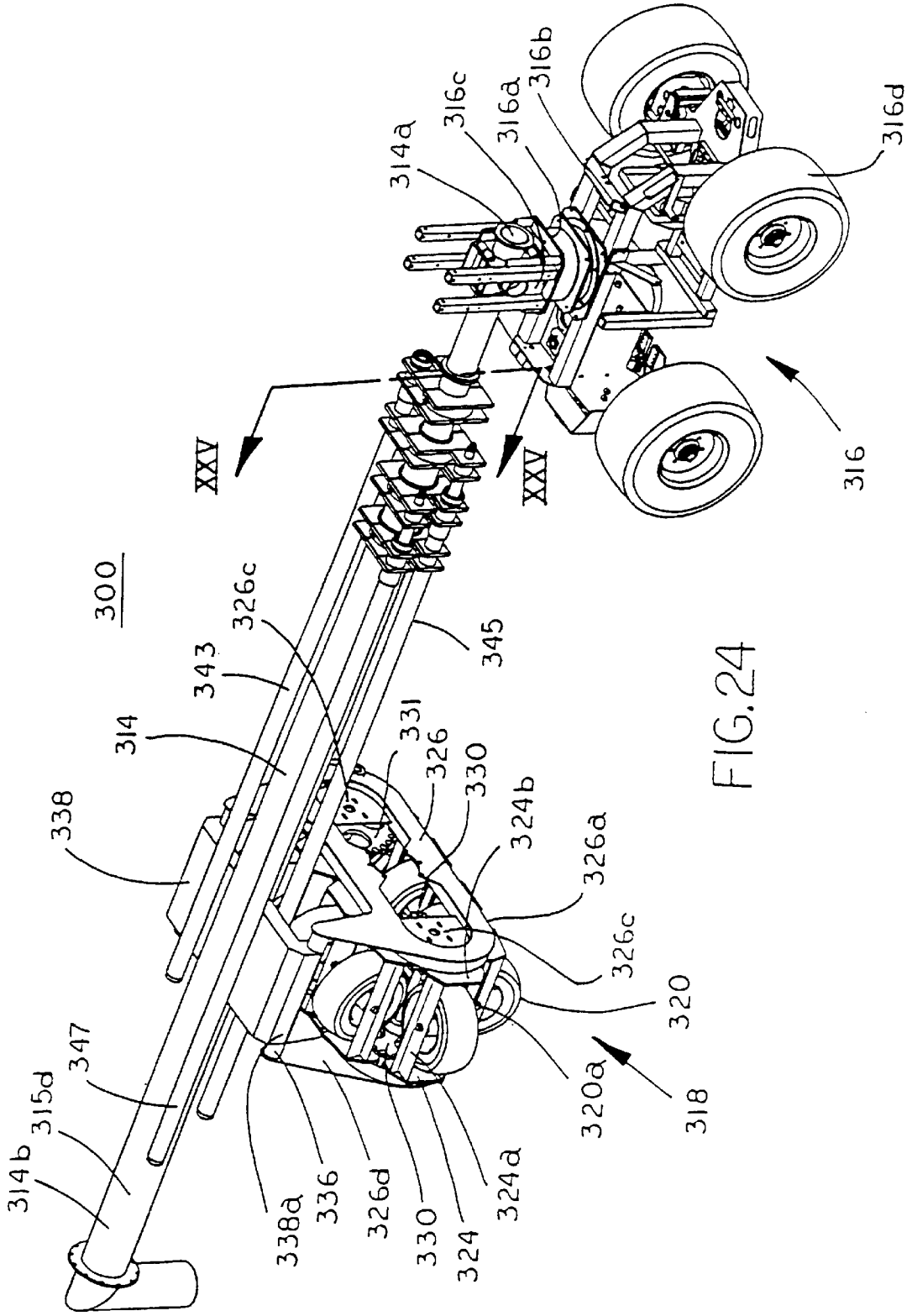
300
XXV
XXV
314a
316c
316a
316b
316d
316
326c
343
345
314
331
326
330
338
324b
326a
326c
320
347
315d
320a
318
314b
338a
336
326d
330
324
324a

FIG. 24

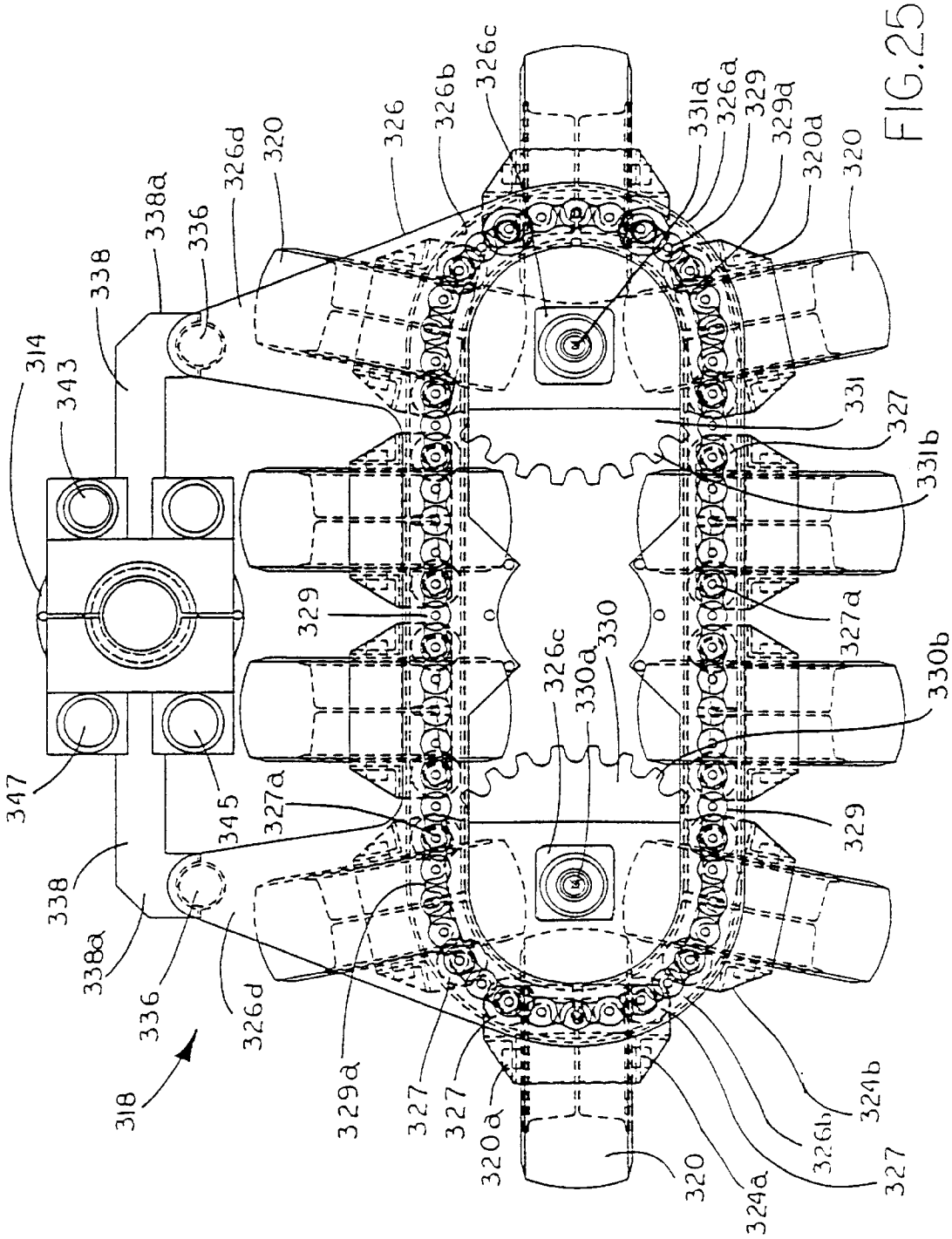
314
343
338
338a
336
326d
320
326
326b
326c
331a
326a
329
329a
320a
320
331
327
331b
329
327a
330
326c
330a
330b
347
345
327a
329
338
338a
336
326d
318
329a
327
327
320a
320
324a
326b
324b
327

FIG.25

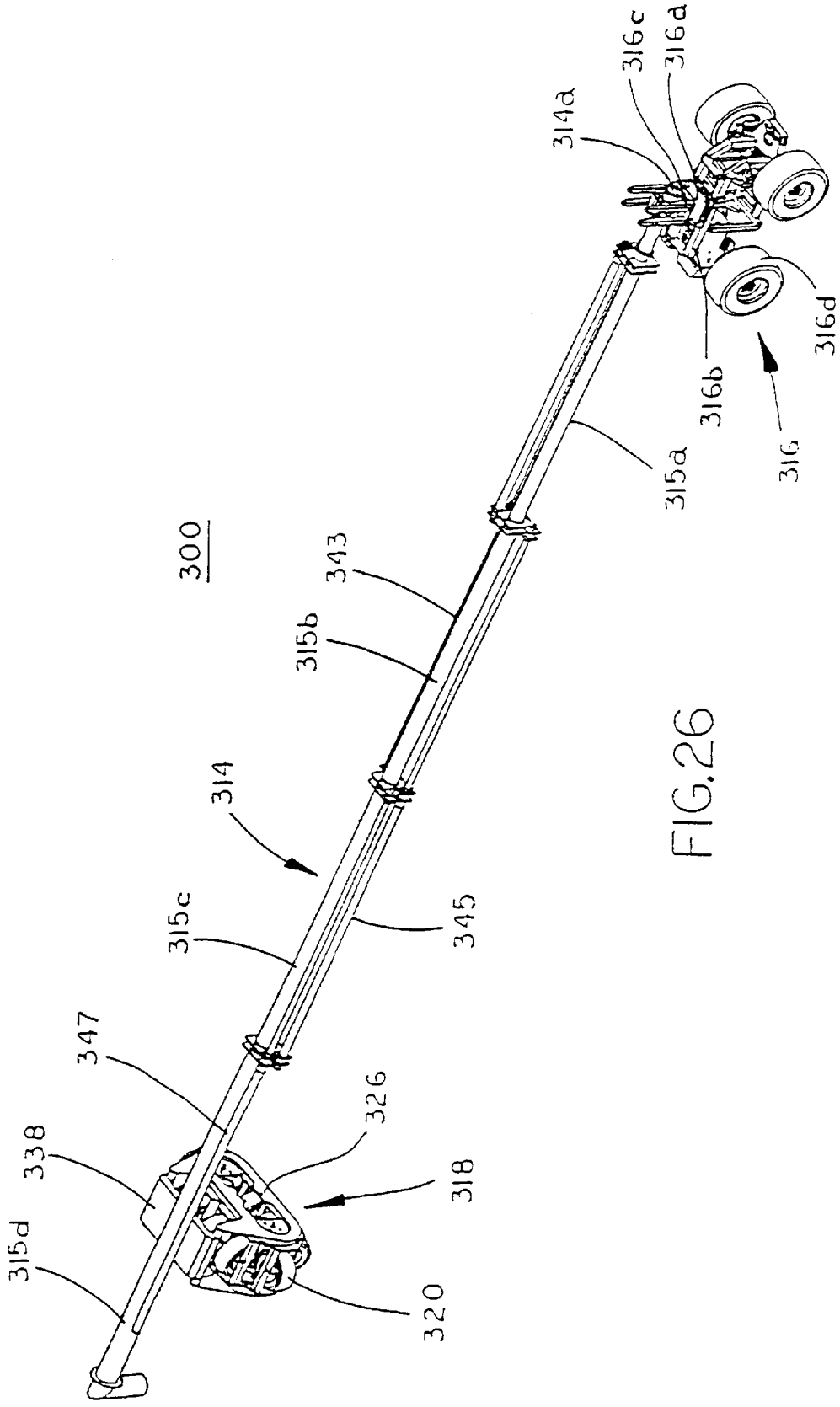
300
314a
316c
316d
316d
316b
316
315a
343
315b
314
315c
345
347
326
338
318
315d
320

FIG.26

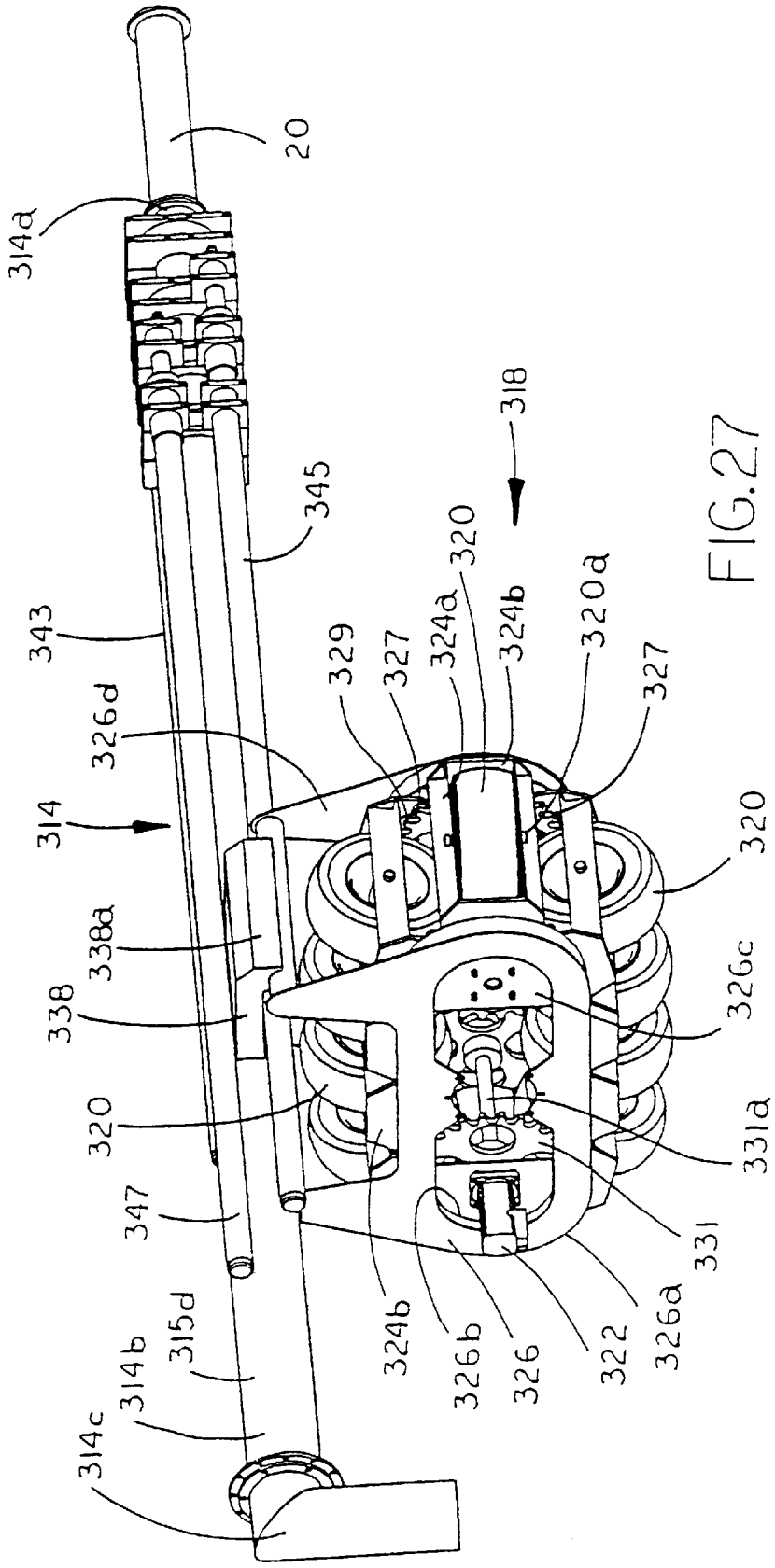
20
314a
318
345
343
320
324a
324b
320a
329
327
327
326d
314
320
338a
338
326c
320
331a
347
331
315d
314b
314c
324b
326b
326
322
326a

FIG.27

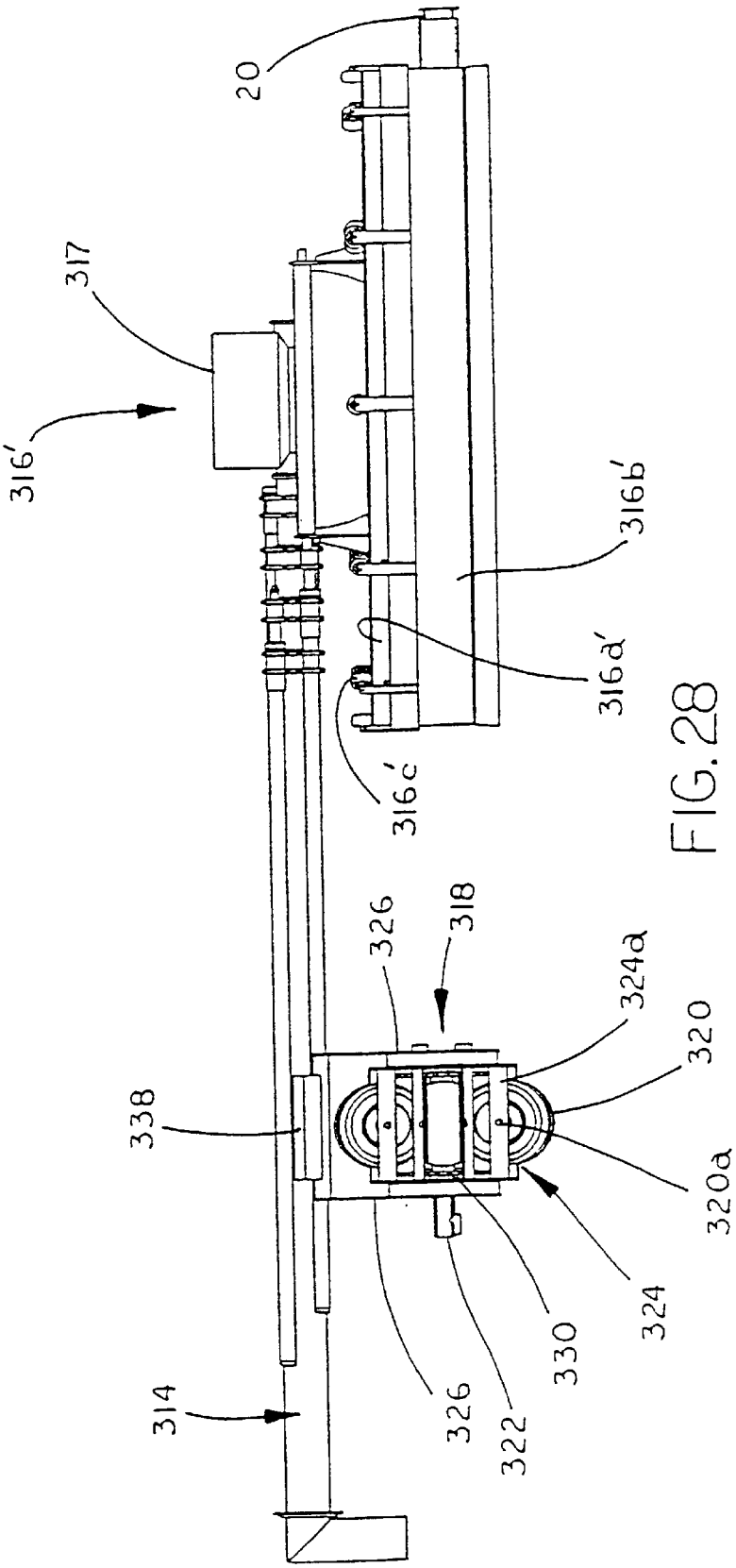
20
317
316'
316b'
316a'
316c'
326
318
324a
320
338
320a
324
330
326
322
314

FIG. 28

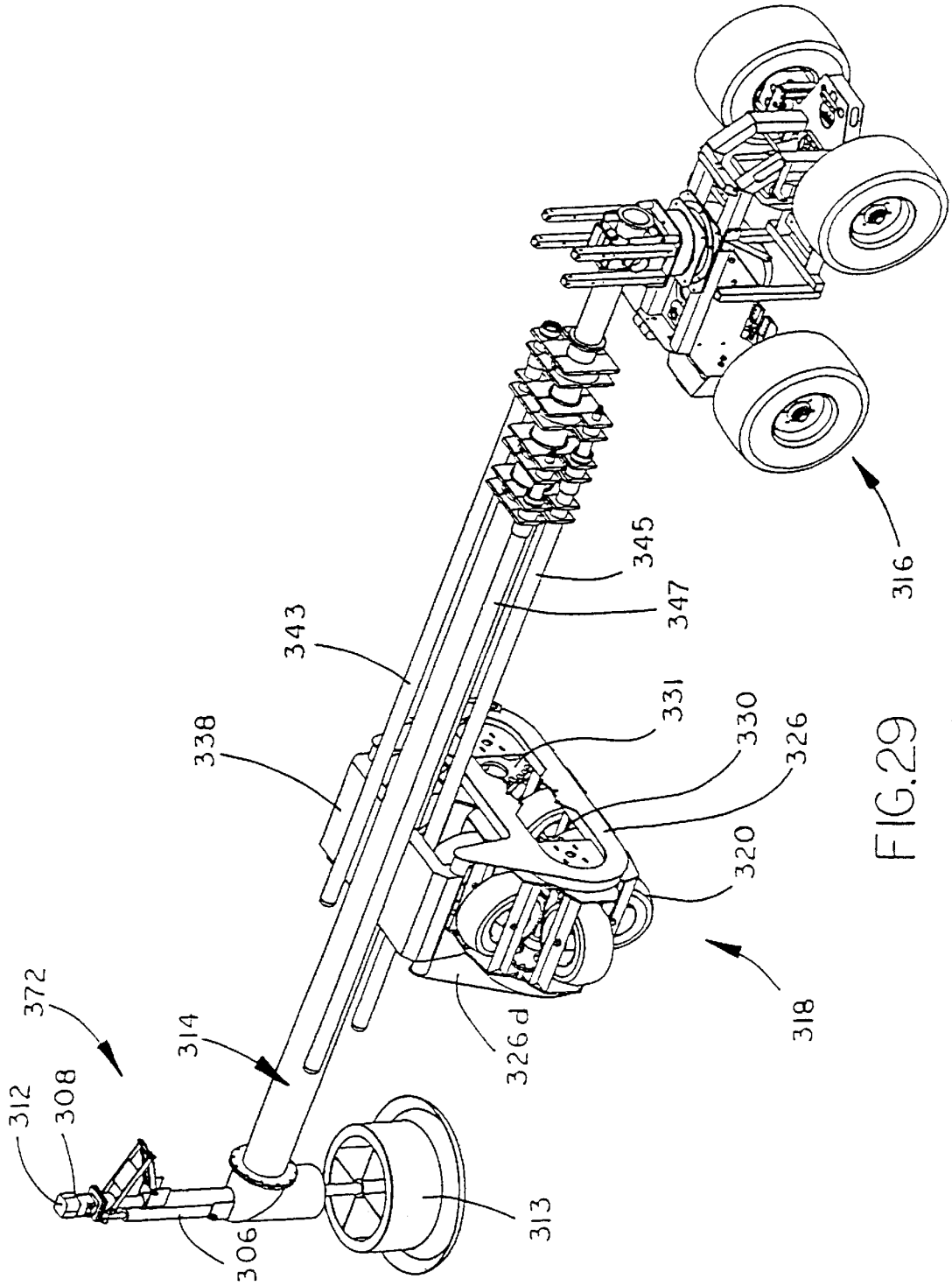
372
312
308
314
306
338
343
313
326d
345
347
331
330
326
320
318
316

FIG.29

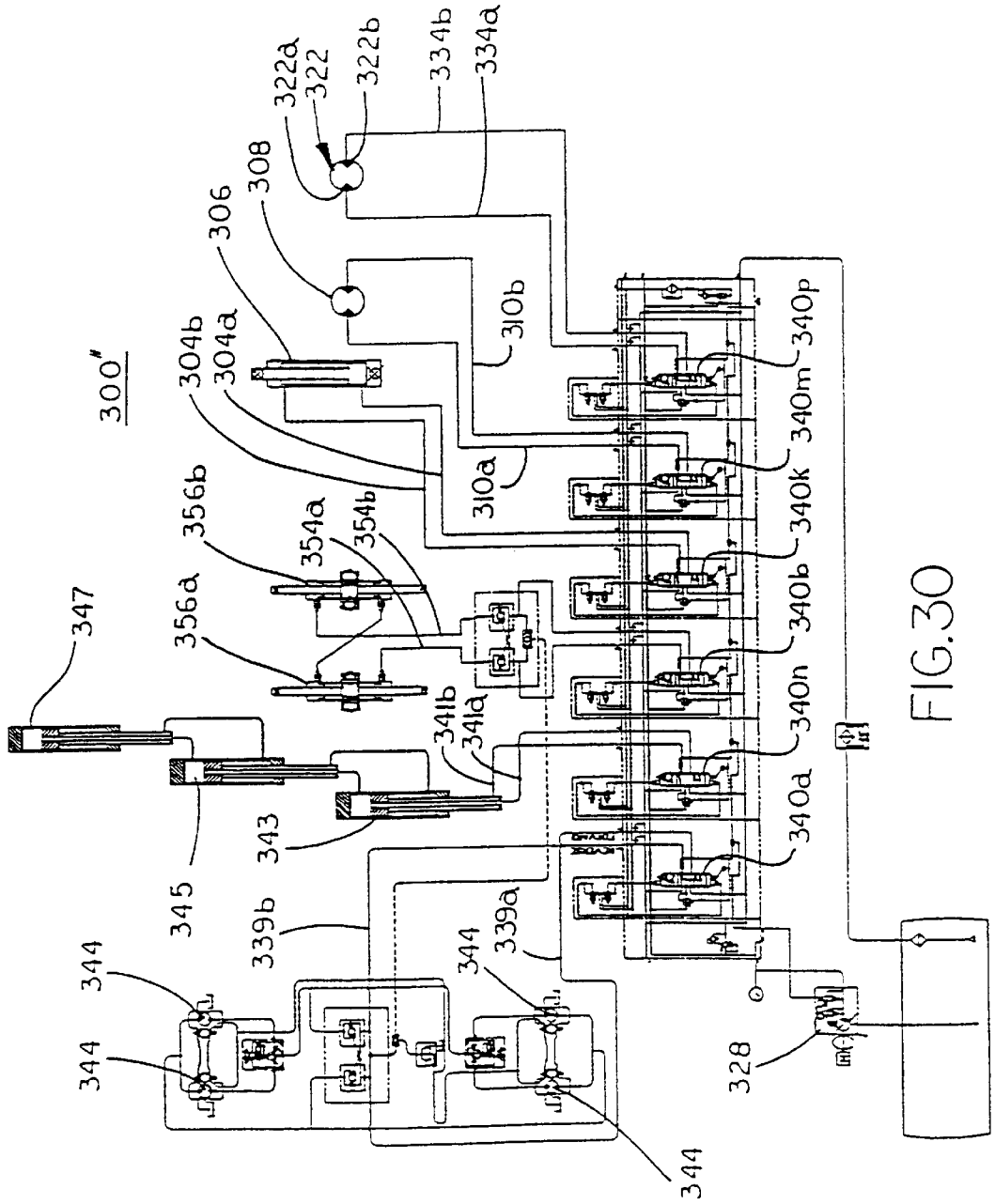
300"
322a
322
322b
334b
334a
308
306
304b
304a
310b
310a
356b
356a
354a
354b
347
341b
341a
343
345
339b
339a
344
344
344
344
340p
340m
340k
340b
340n
340a
328

FIG.30

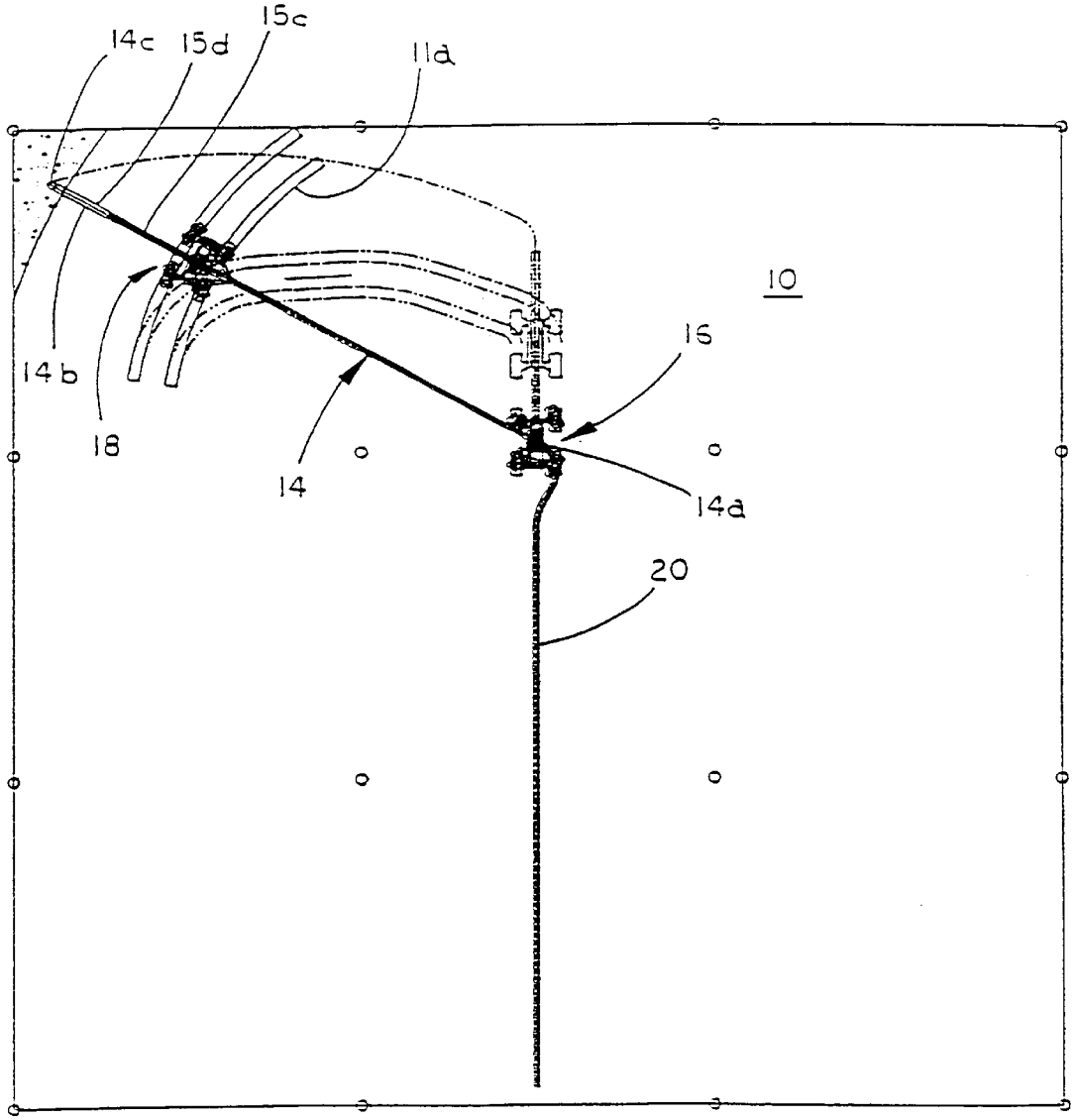

FIG. 31

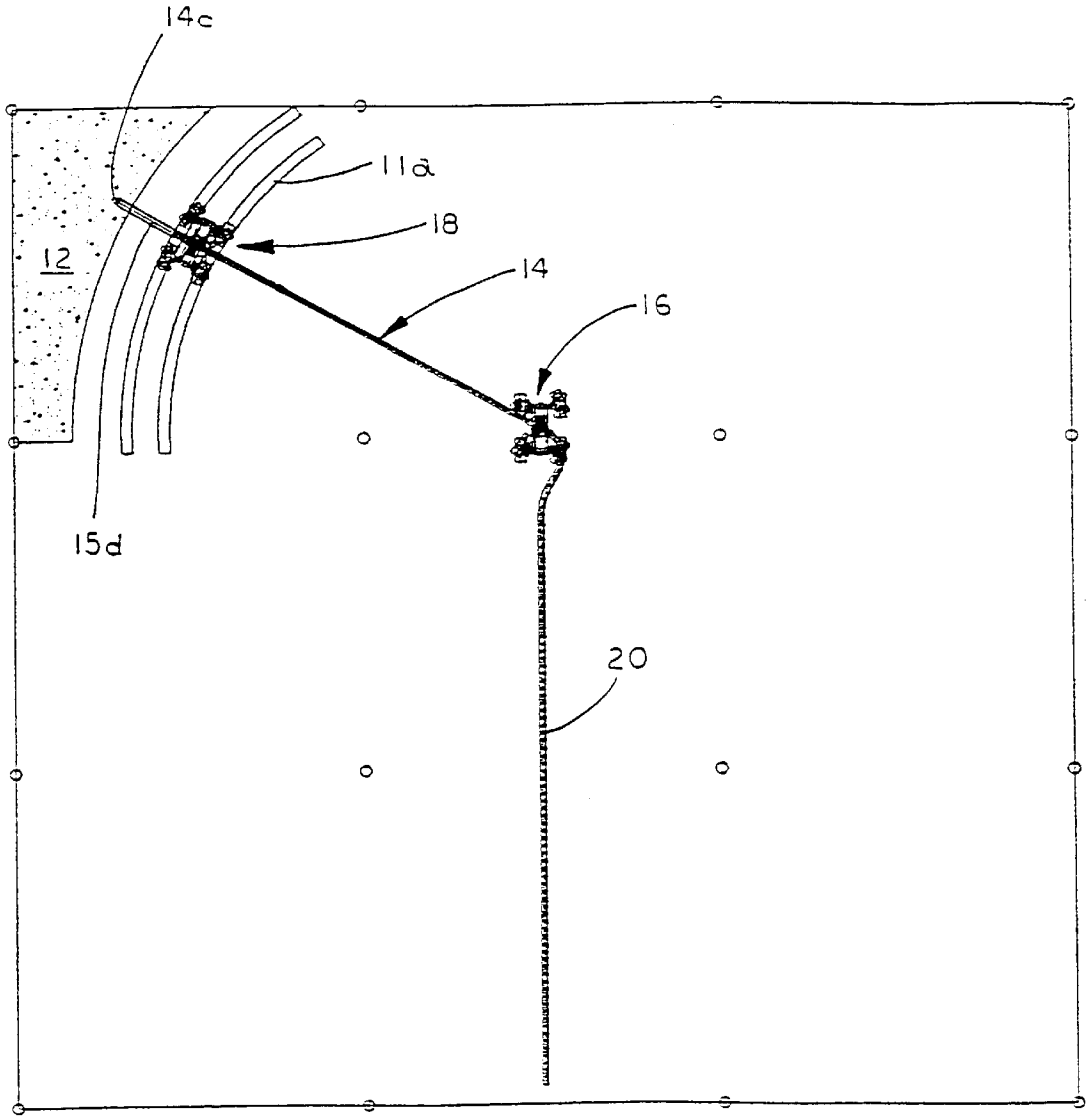

FIG.32

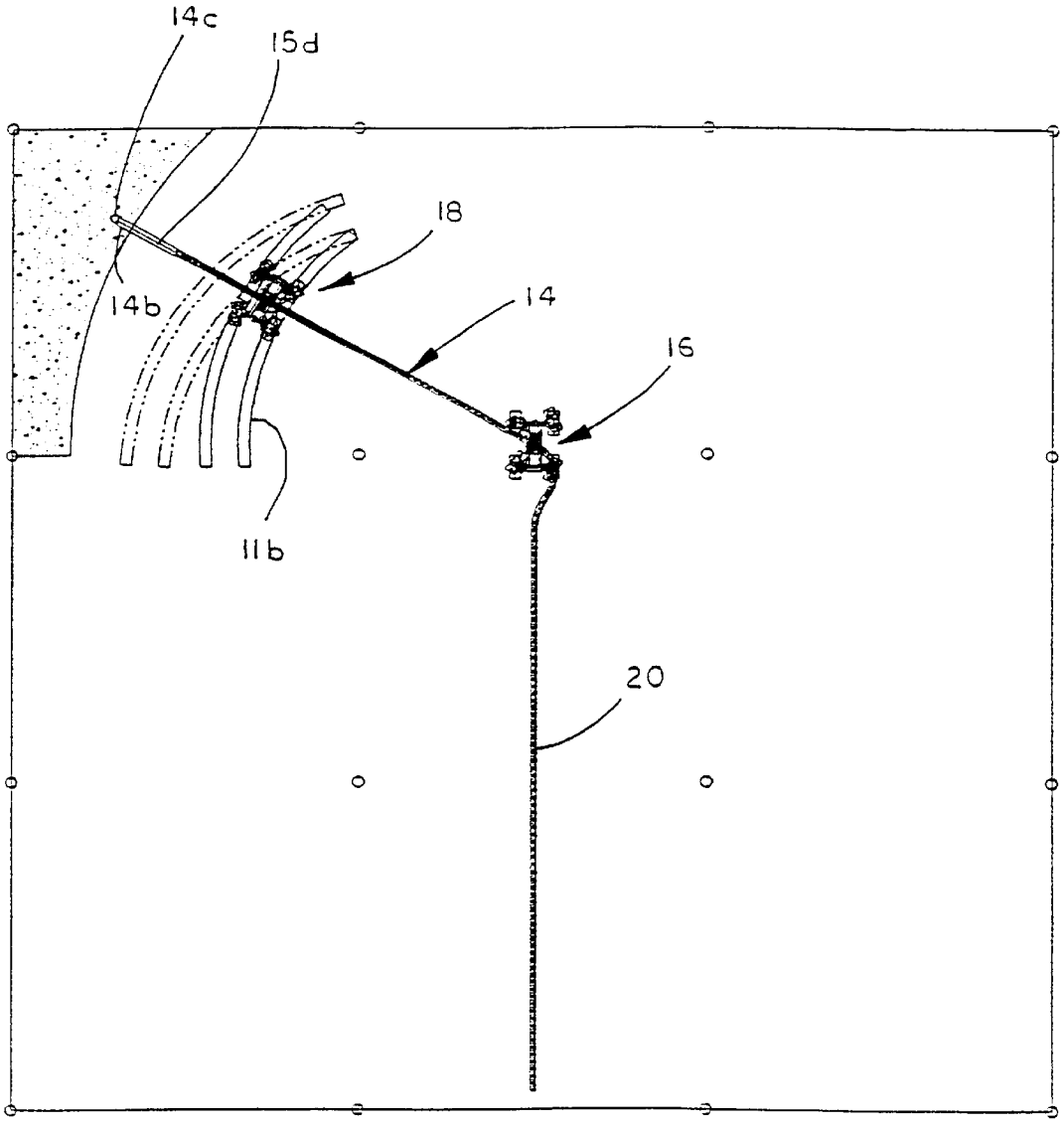

FIG. 33

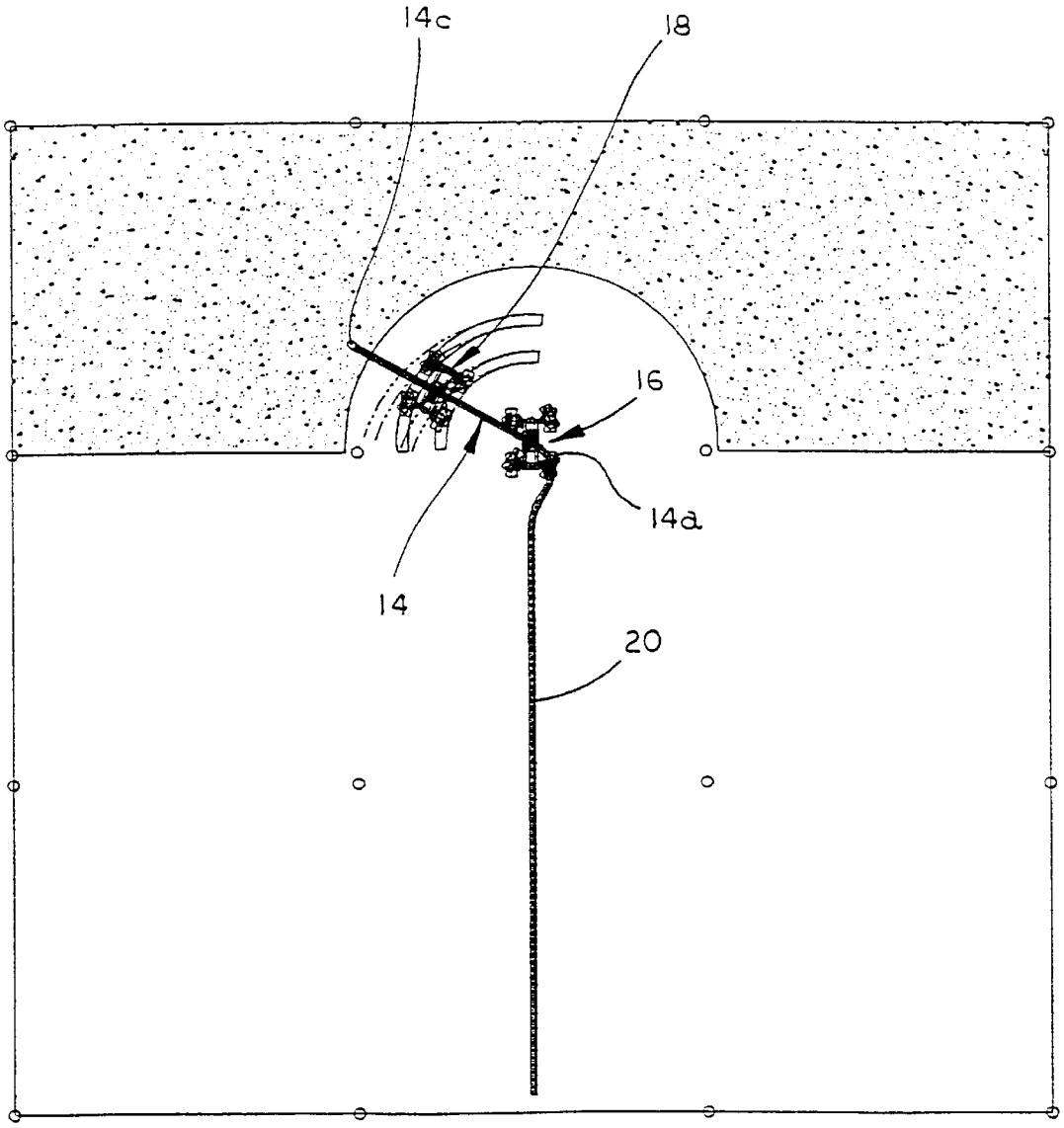

FIG.34

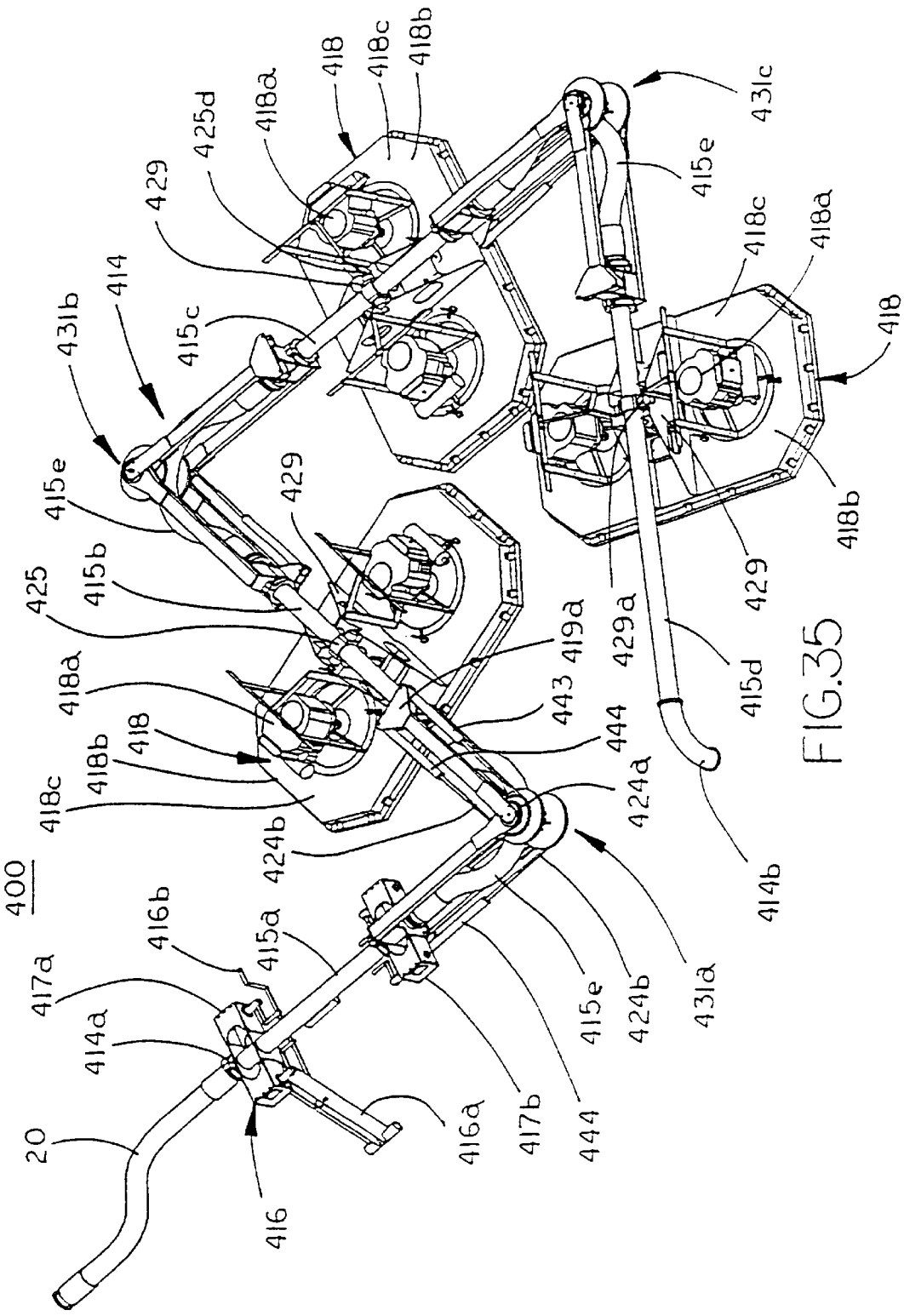
400
20
414
414a
414b
415a
415b
415c
415d
415e
416
416a
416b
417a
417b
418
418a
418b
418c
419a
424a
424b
425
425d
429
429a
431a
431b
431c
443
444

FIG.35

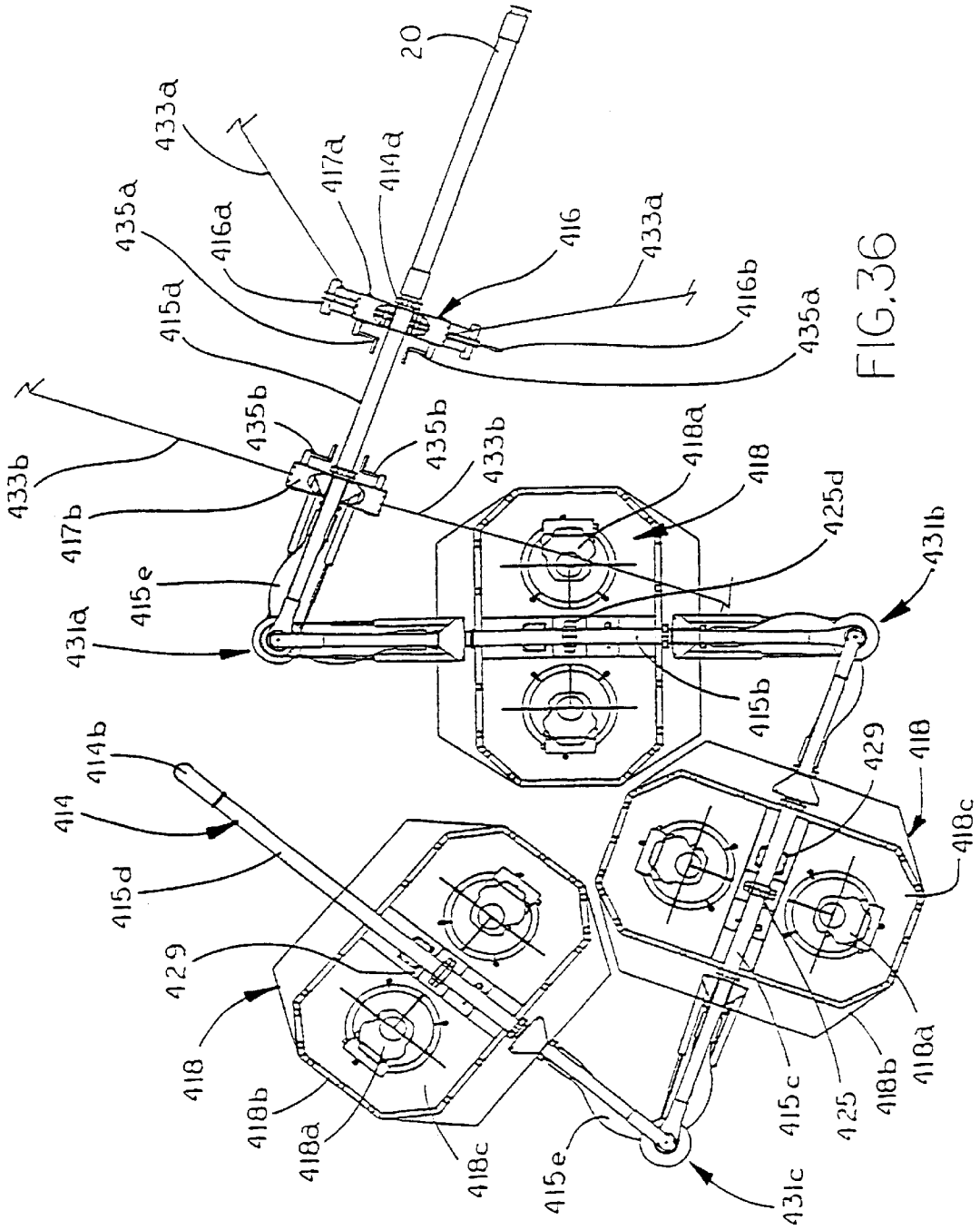
20
433a
417a
414a
435a
416a
415a
416
433a
416b
435a
433b
417b
415e
431a
435b
435b
433b
418a
418
425d
431b
415b
414b
414
415d
429
418
418b
418a
418c
415e
431c
415c
425
418b
418a
429
418
418c

FIG. 36

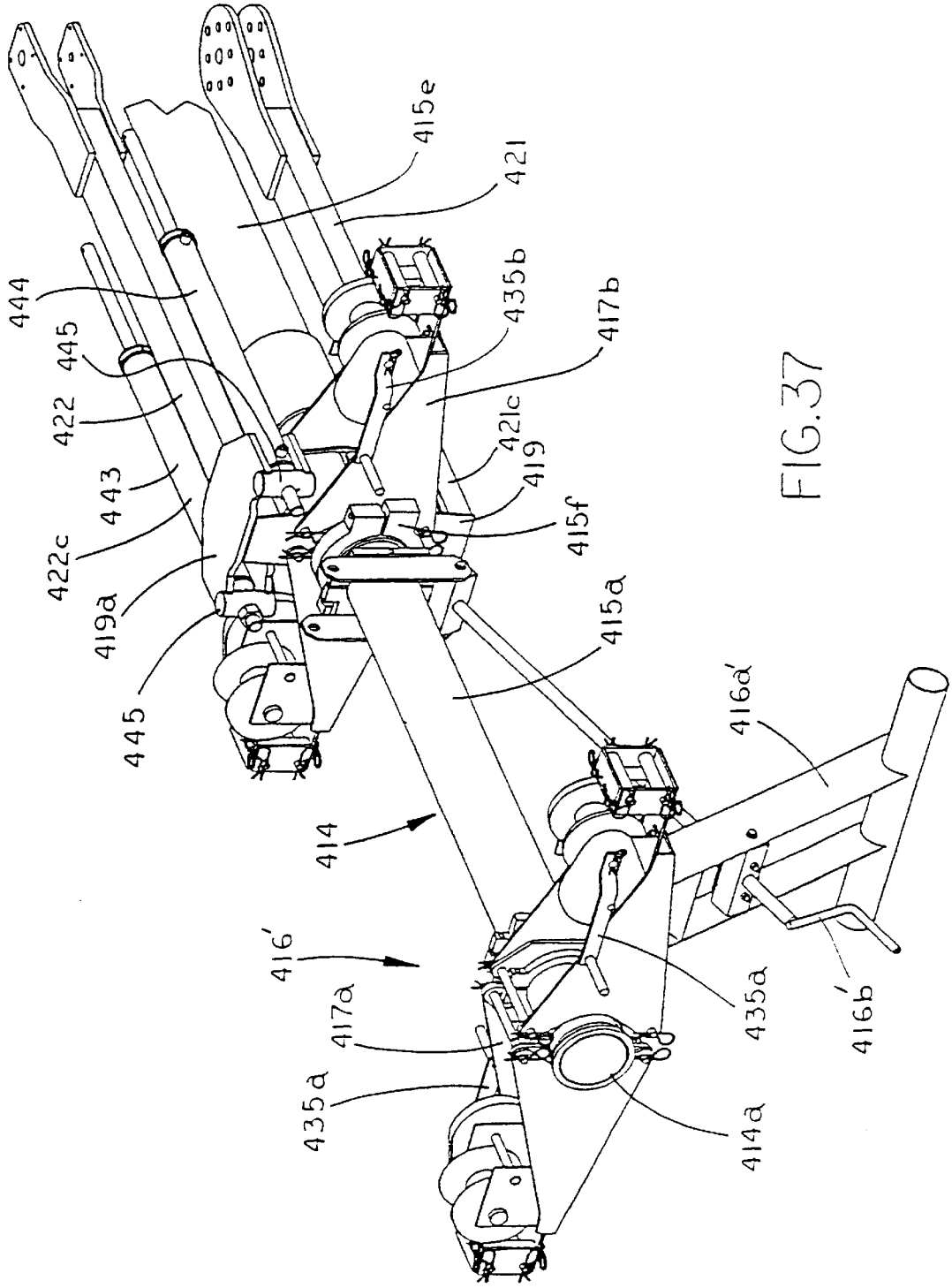
415e
421
444
445
422
443
422c
419a
445
435b
417b
421c
419
415f
415a
414
416'
417a
435a
416a'
435a
416b'
414a

FIG. 37

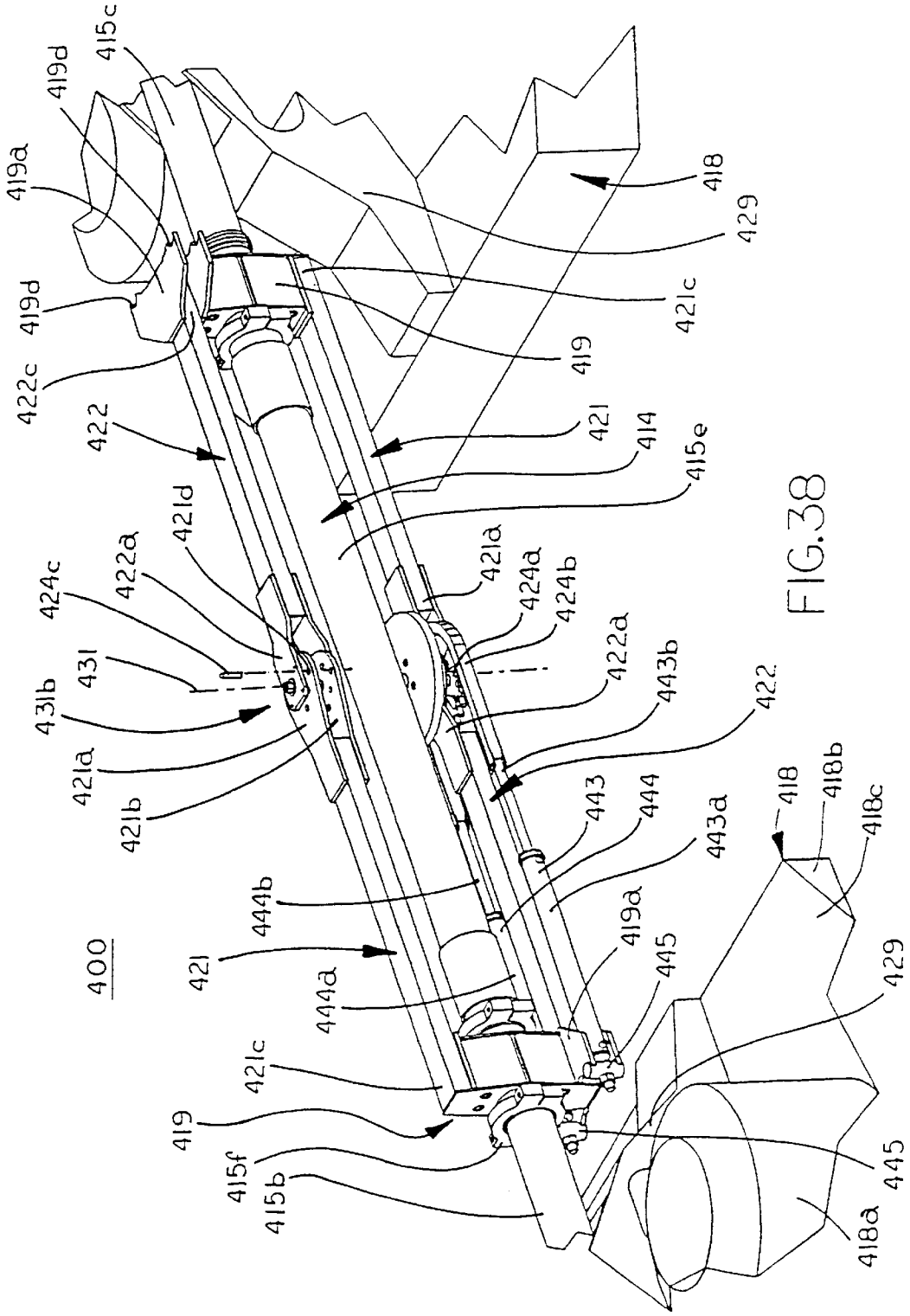
400
415c
419d
419a
419d
422c
422
421d
422a
424c
431
431b
421a
421b
421
444b
444a
421c
419
415f
415b
421a
424a
424b
422a
443b
422
443
444
443a
419a
445
445
418
418b
418c
429
429
418a
418
421c
419
421
414
415e

FIG. 38

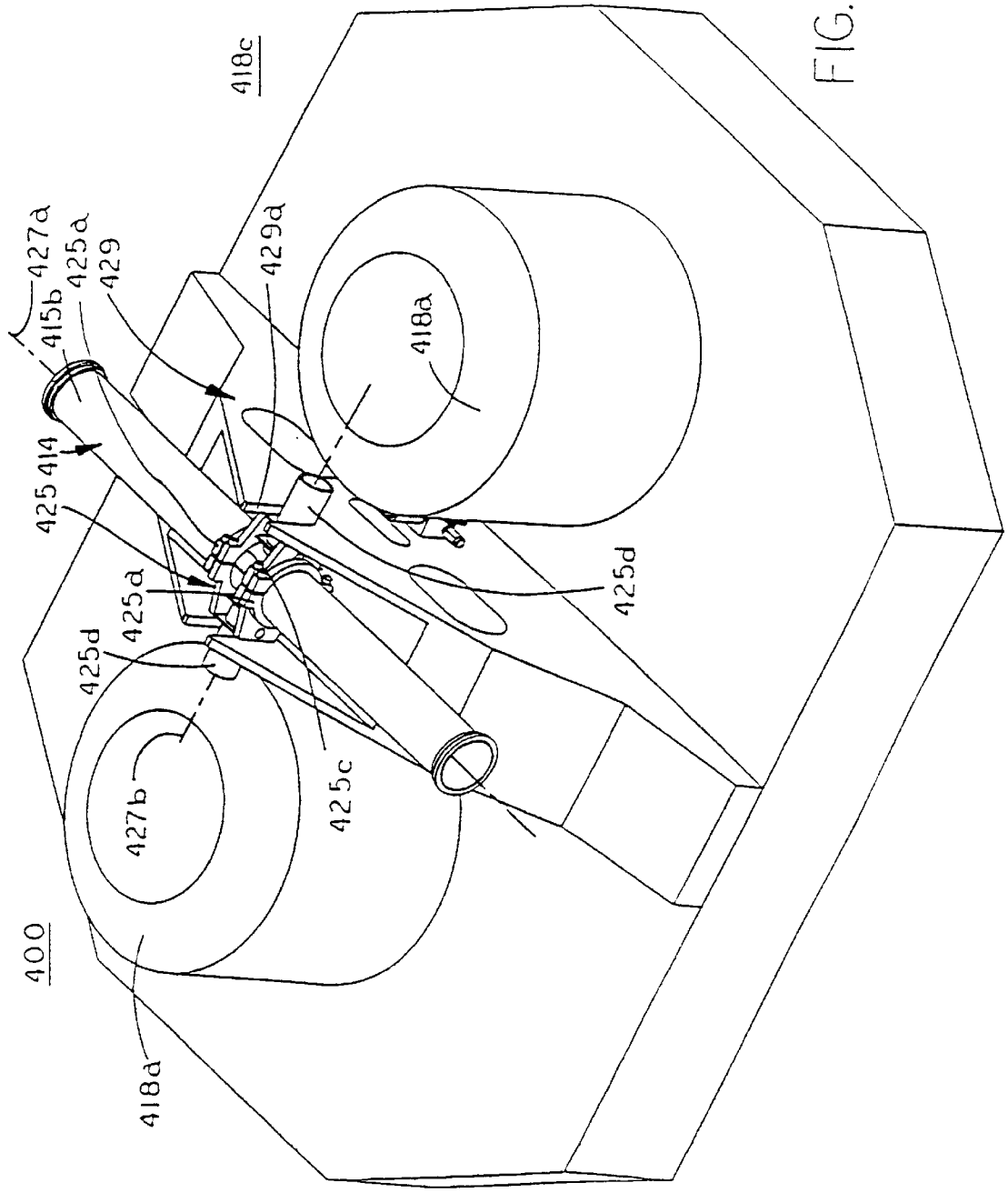
400
418a
427b
425d
425a
425 414
415b
427a
425a
429
418c
429a
418a
425c
425d

FIG. 39

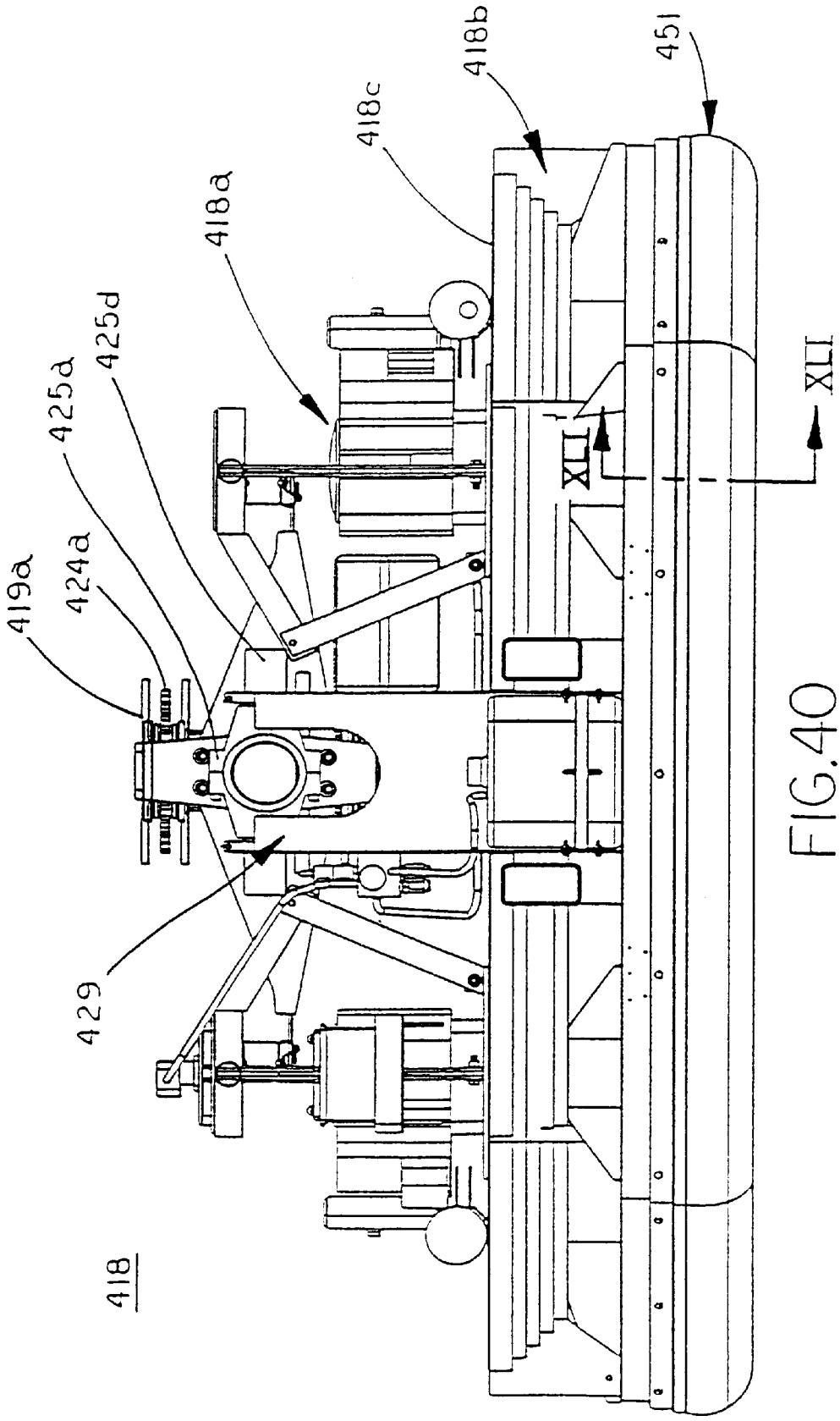

FIG.40

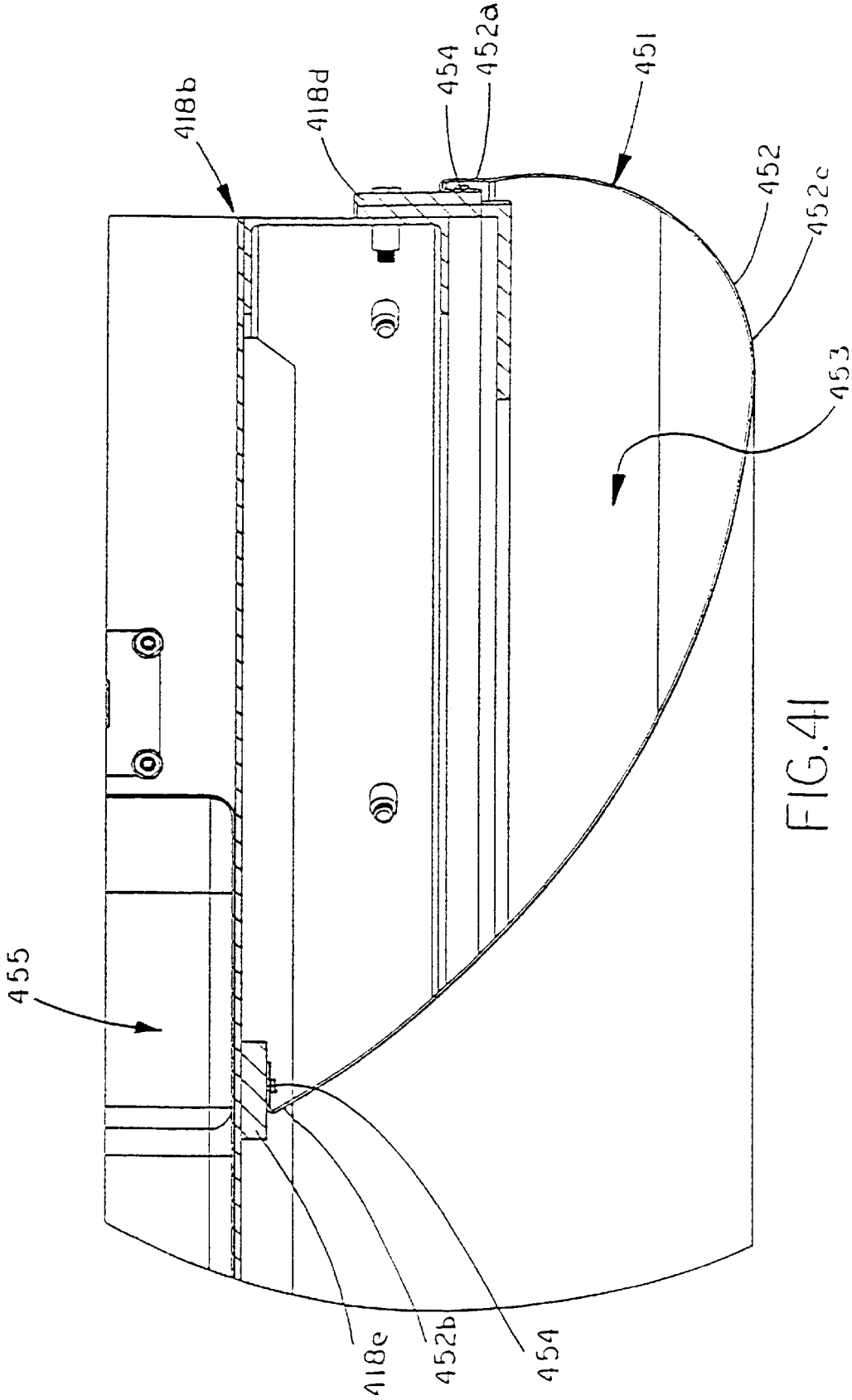

FIG.41

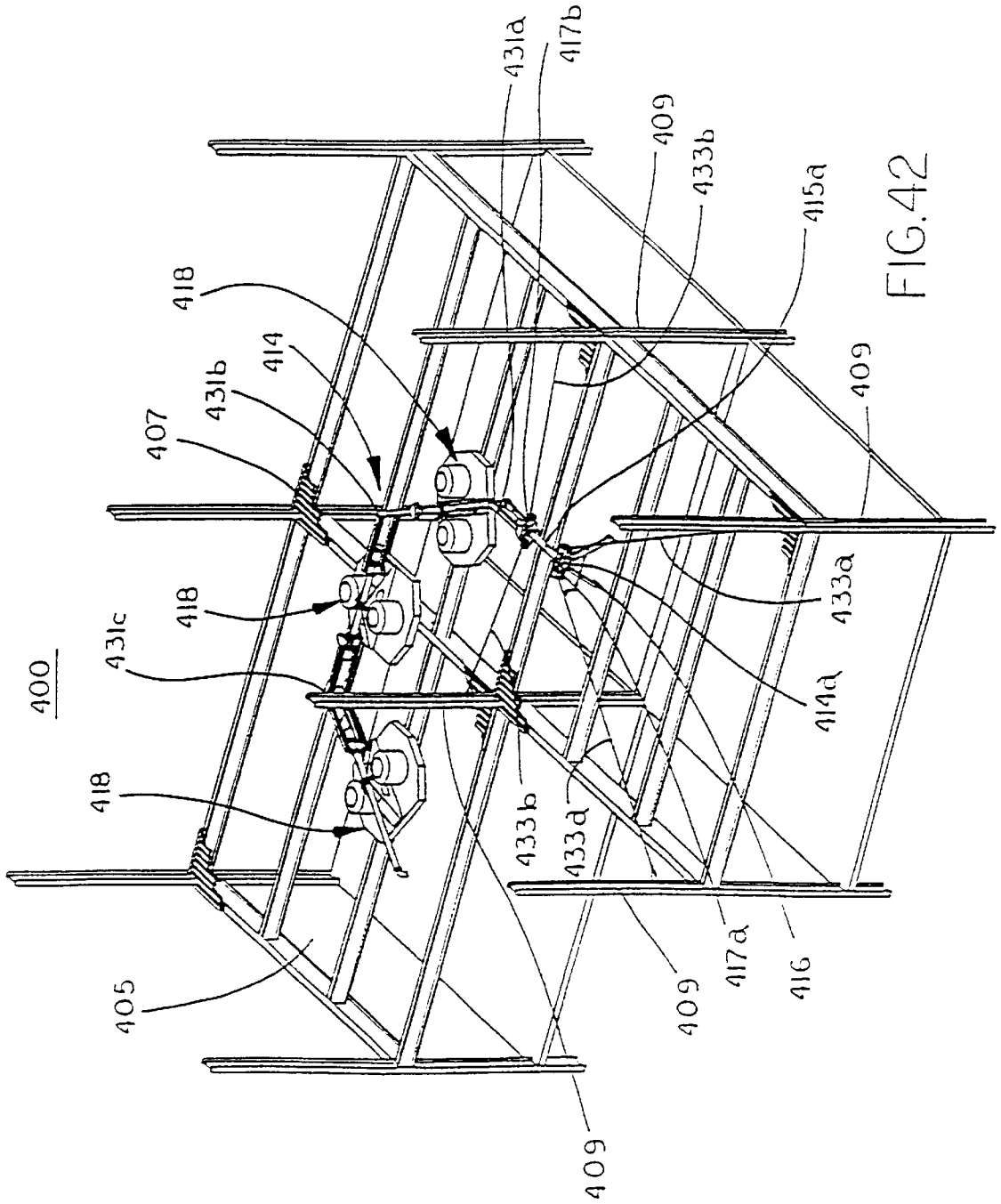
400
405
407
409
409
409
414
414a
415a
416
417a
417b
418
418
418
431a
431b
431c
433a
433b
433b
433d

FIG. 42

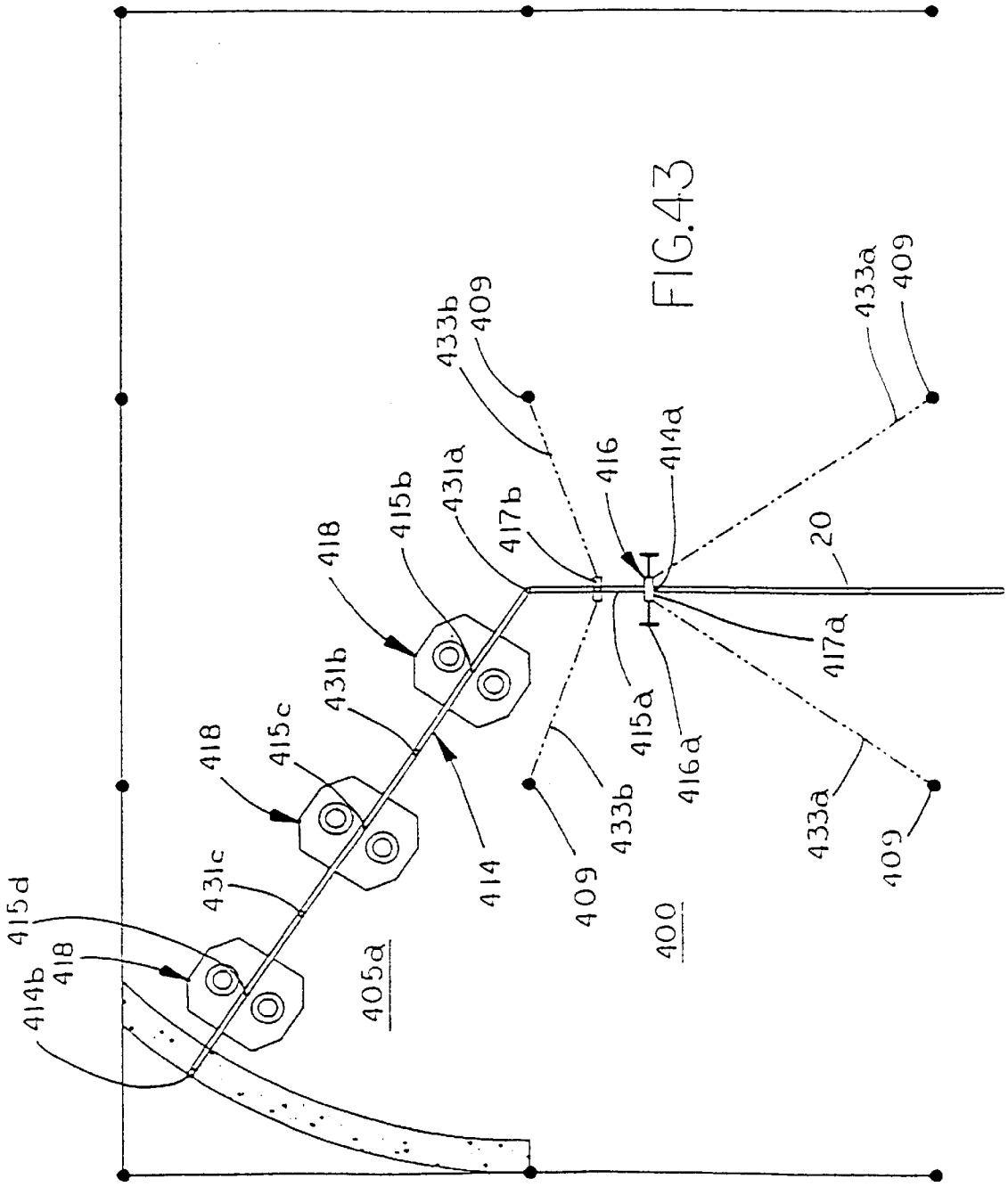
433b
409
433a
409
416
414a
431a
415b
417b
418
20
417a
431b
415c
418
415a
416a
433b
433a
409
414
409
431c
415d
418
414b
405a
400

FIG.43

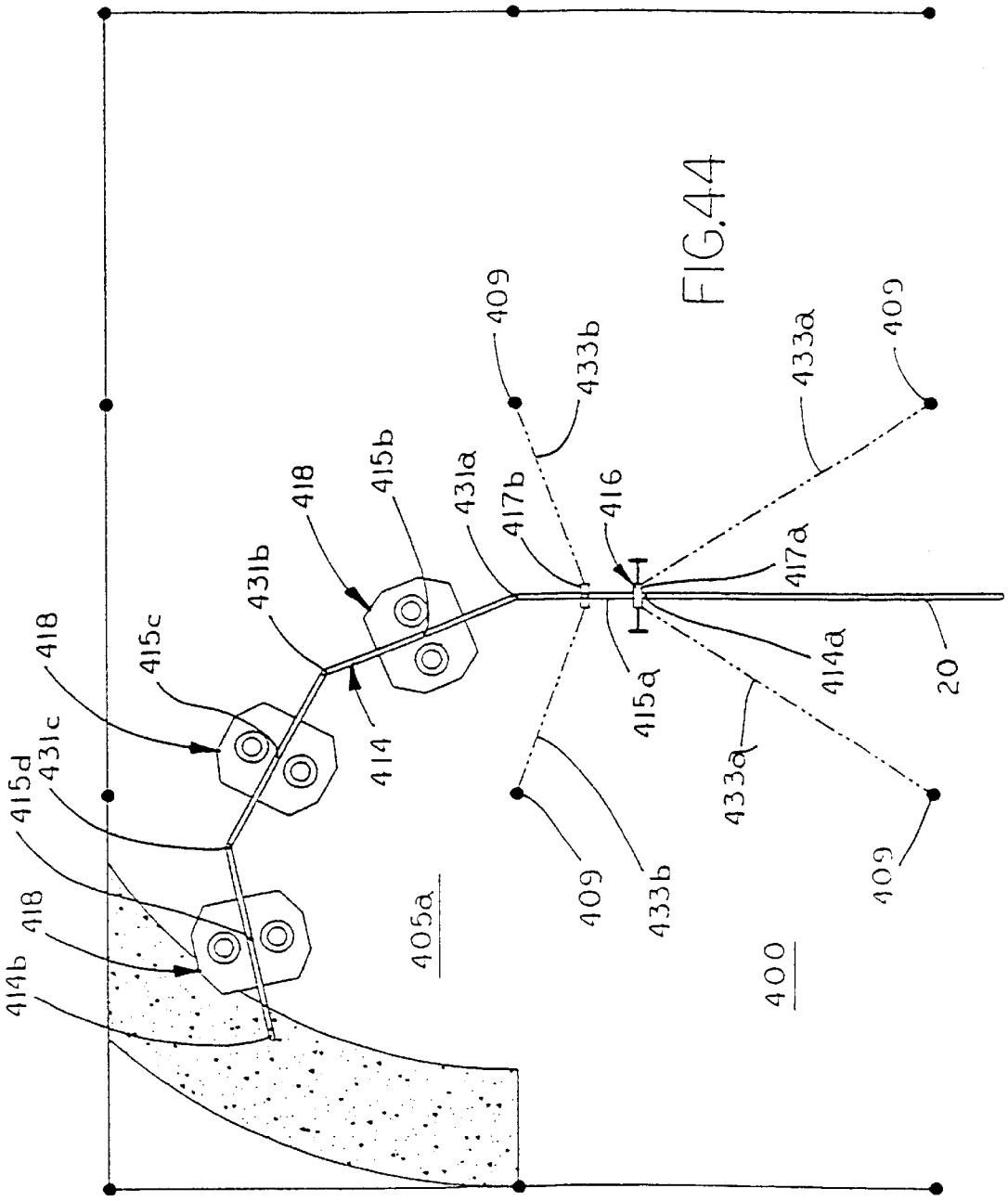
409
433b
433a
409
418
415b
431a
417b
416
417a
431b
418
415c
414a
20
415a
414
431c
415d
433a
409
433b
409
405a
418
414b
400

FIG.44

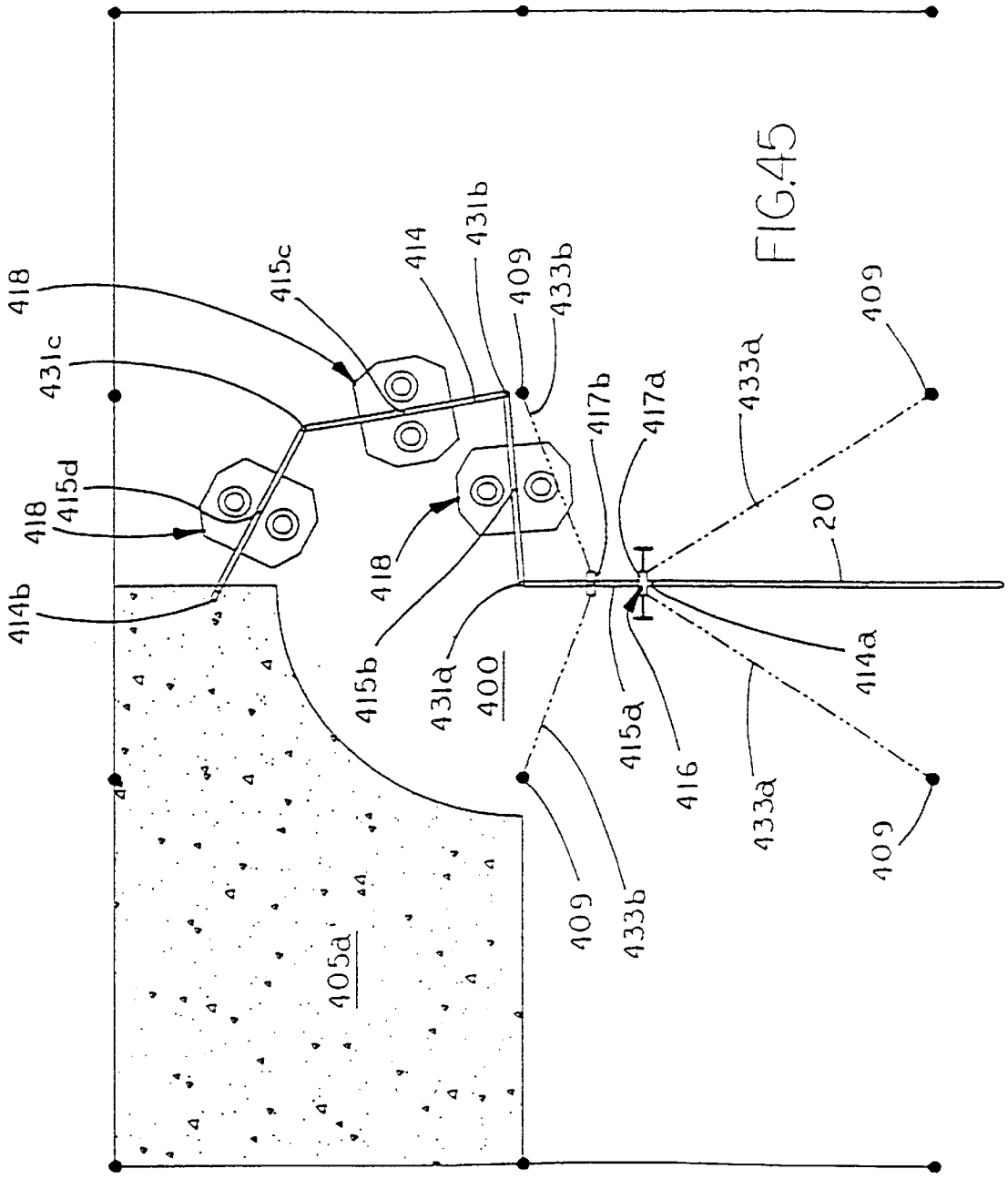
418
415c
414
431b
409
433b
431c
415d
418
414b
418
415b
431a
400
417b
417a
433a
409
20
414a
415a
416
433a
409
409
433b
405a

FIG.45

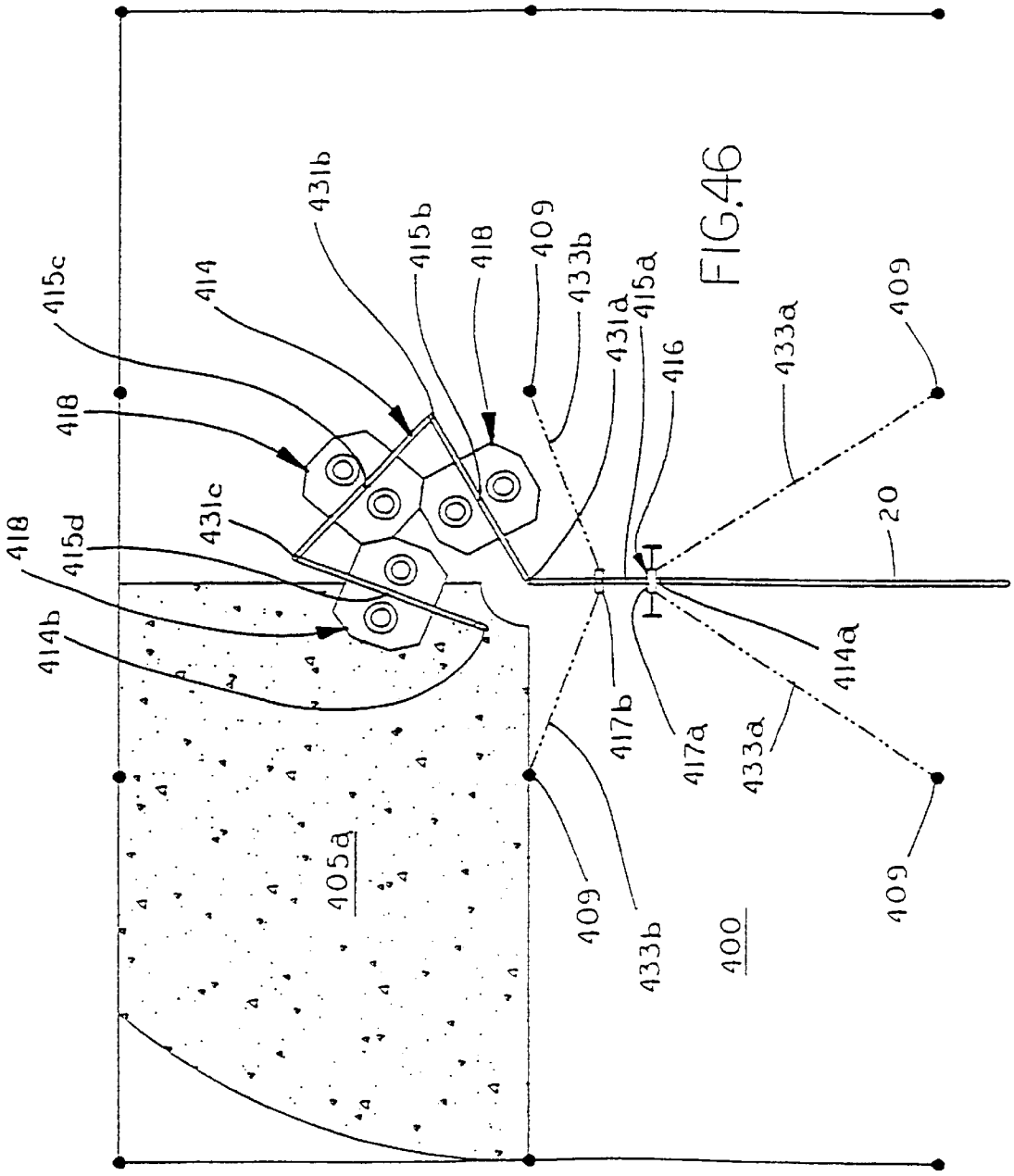
415c
414
431b
415b
418
409
433b
431a
415a
416
433a
409
418
431c
415d
418
414b
20
414a
417b
417a
433a
405a
409
433b
400
409

FIG.46

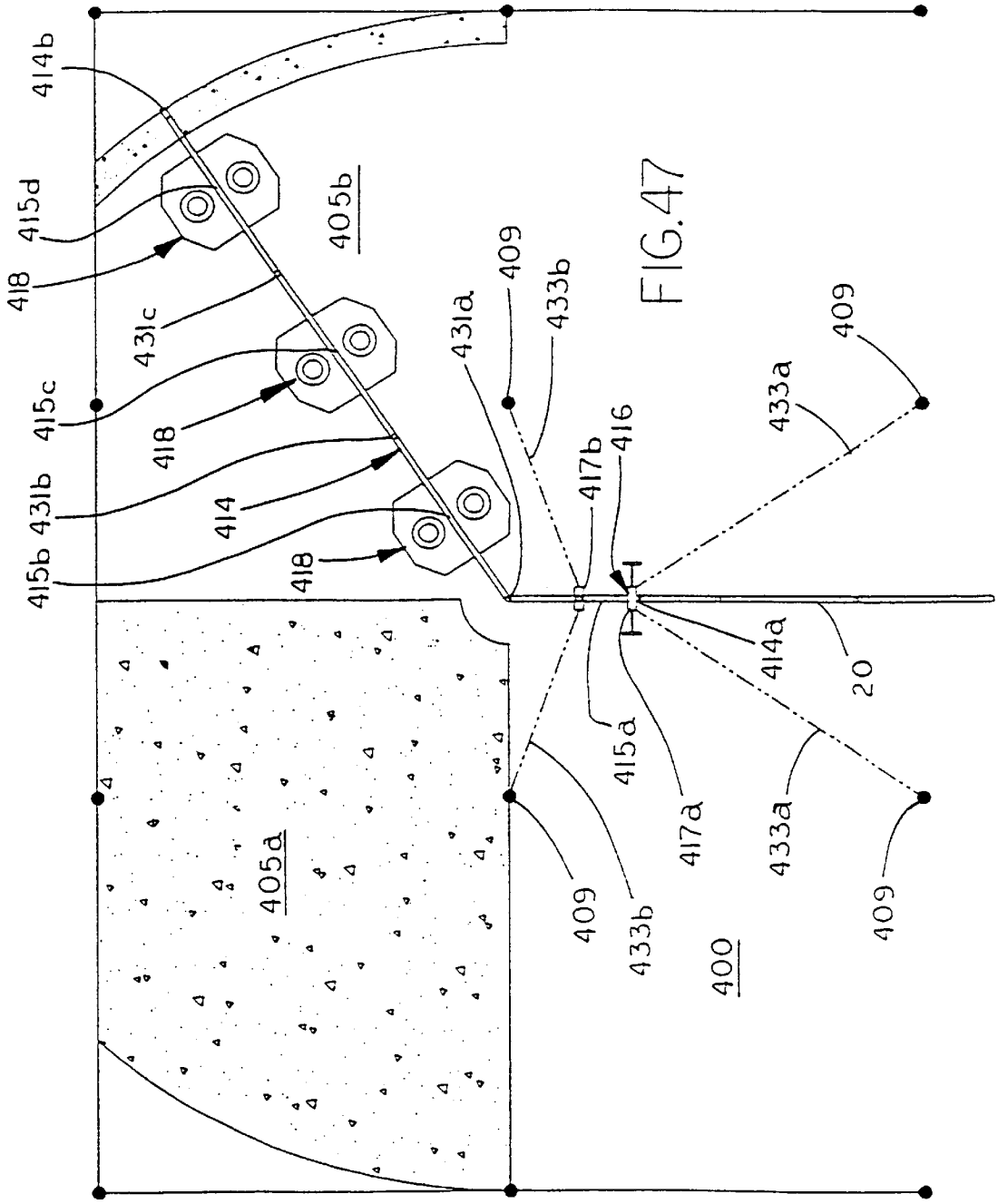
414b
415d
418
431c
415c
418
431b
414
415b
418
405b
431a
409
433b
417b
416
433a
409
414a
20
415a
417a
433a
409
433b
409
405a
400

FIG. 47

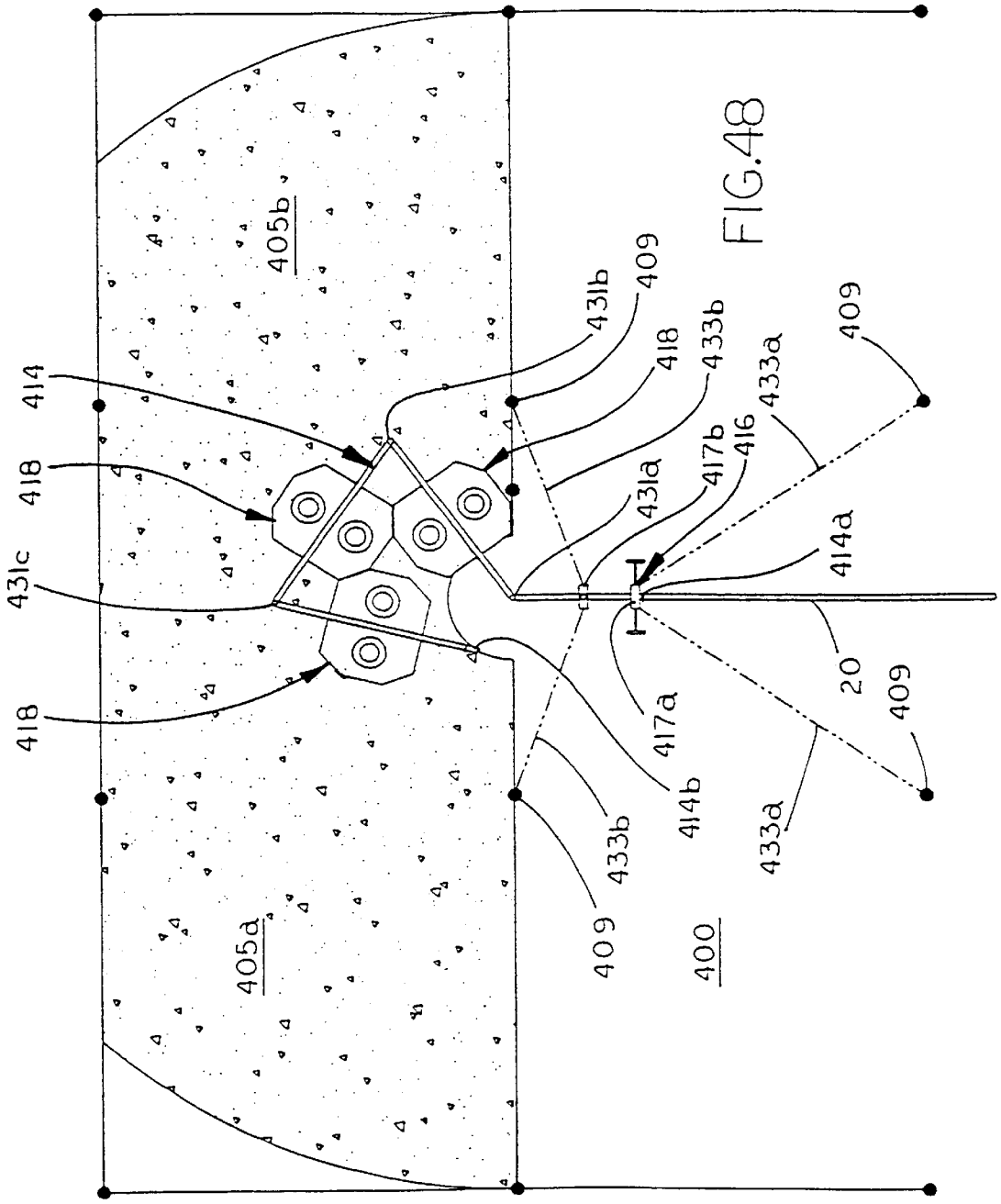
405b
405a
414
418
431c
418
431b
409
418
433b
433a
409
431a
417b
416
414a
20
409
417a
414b
433b
433a
409
400

FIG.48

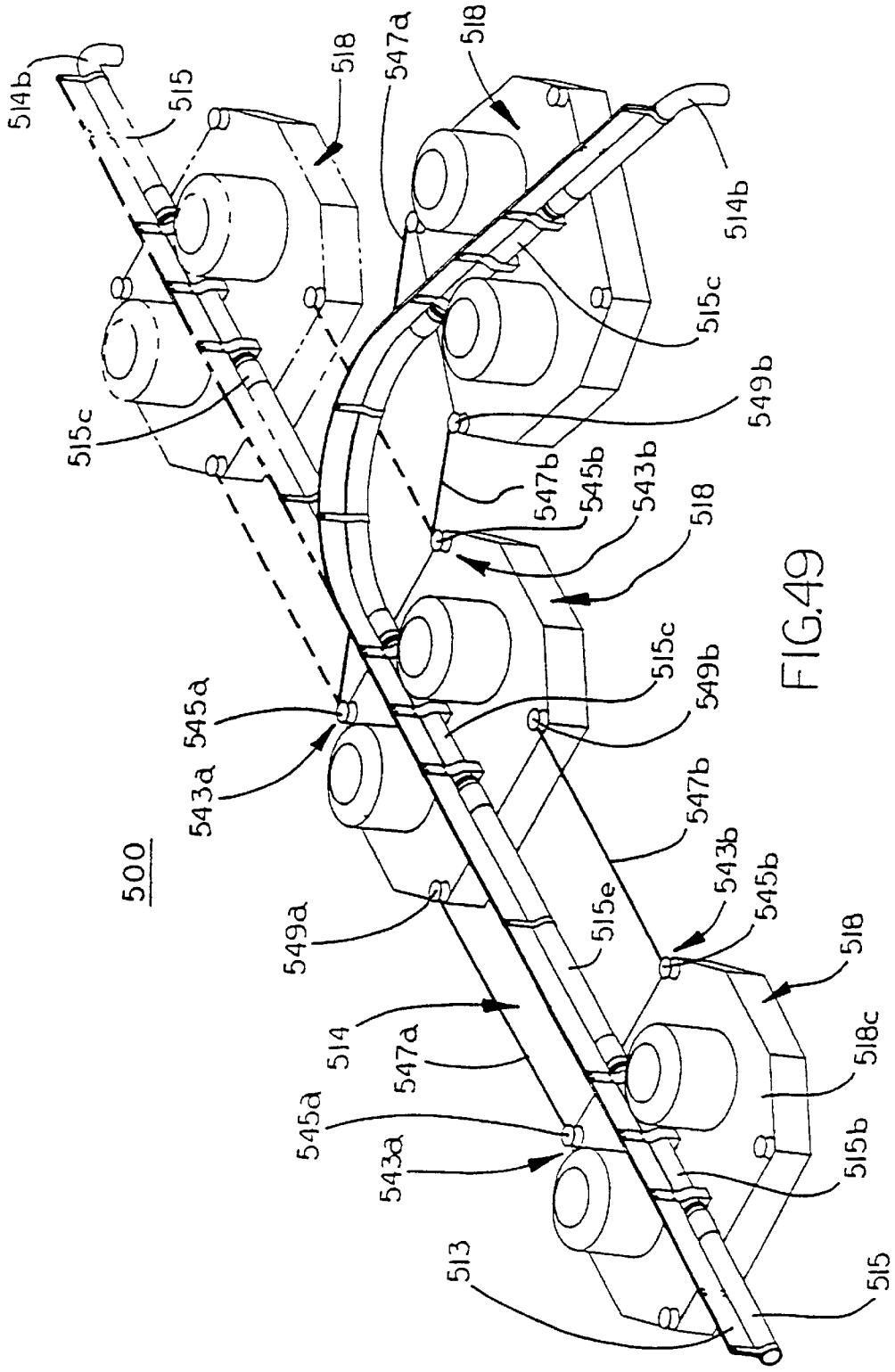
514b
515
518
547a
518
514b
515c
549b
547b
545b
543b
518
515c
549b
547b
543b
545b
518
515e
518c
515b
515
513
514
547a
545a
543a
549a
500
545a
543a

FIG.49

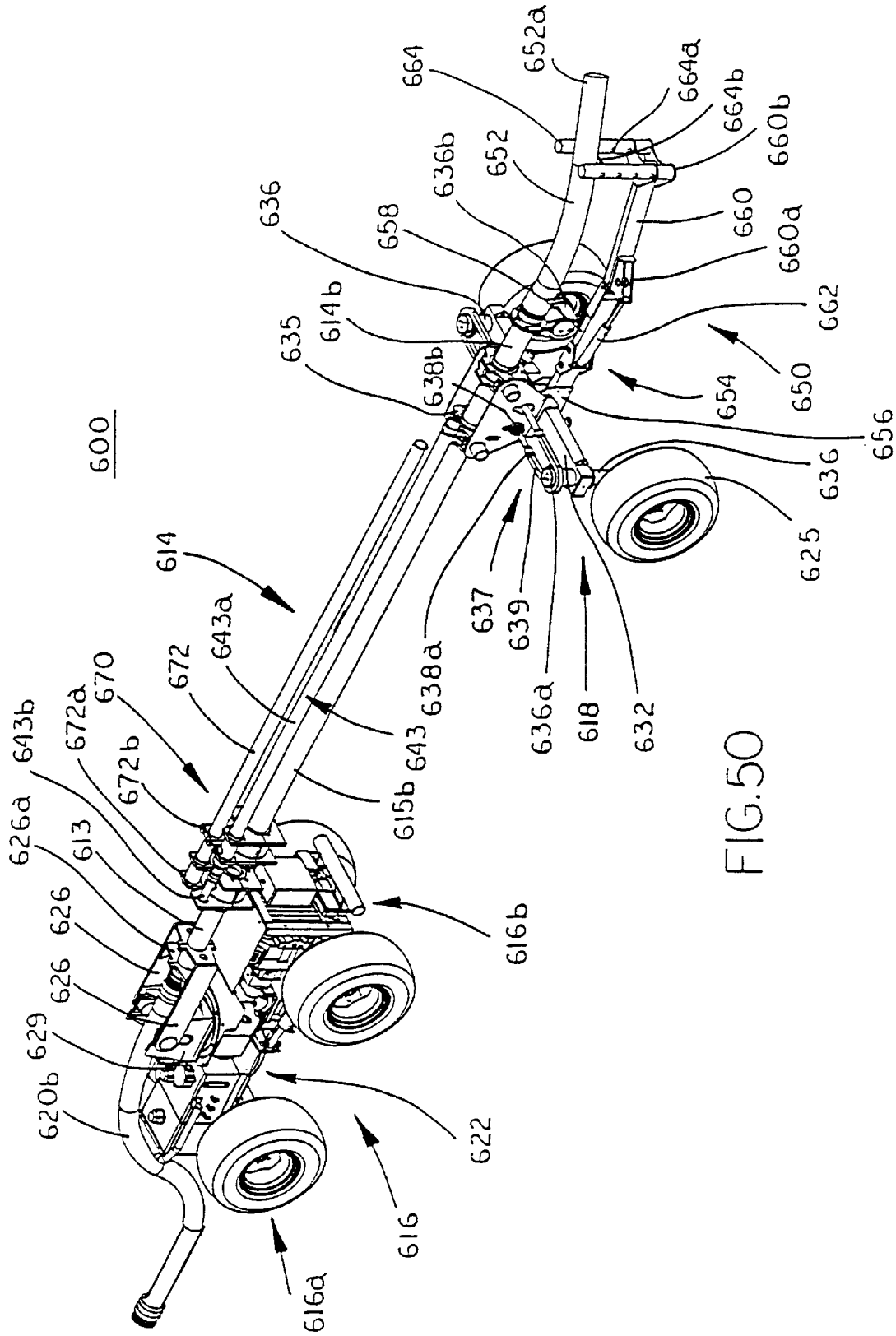
600
614
643a
672
670
672a
643b
672b
626a
613
626
626
629
620b
616a
616
622
616b
615b
643
638a
636a
637
639
618
632
625
636
656
654
650
662
660
660a
660b
664b
664a
652a
652
664
636b
658
636
614b
635
638b

FIG.50

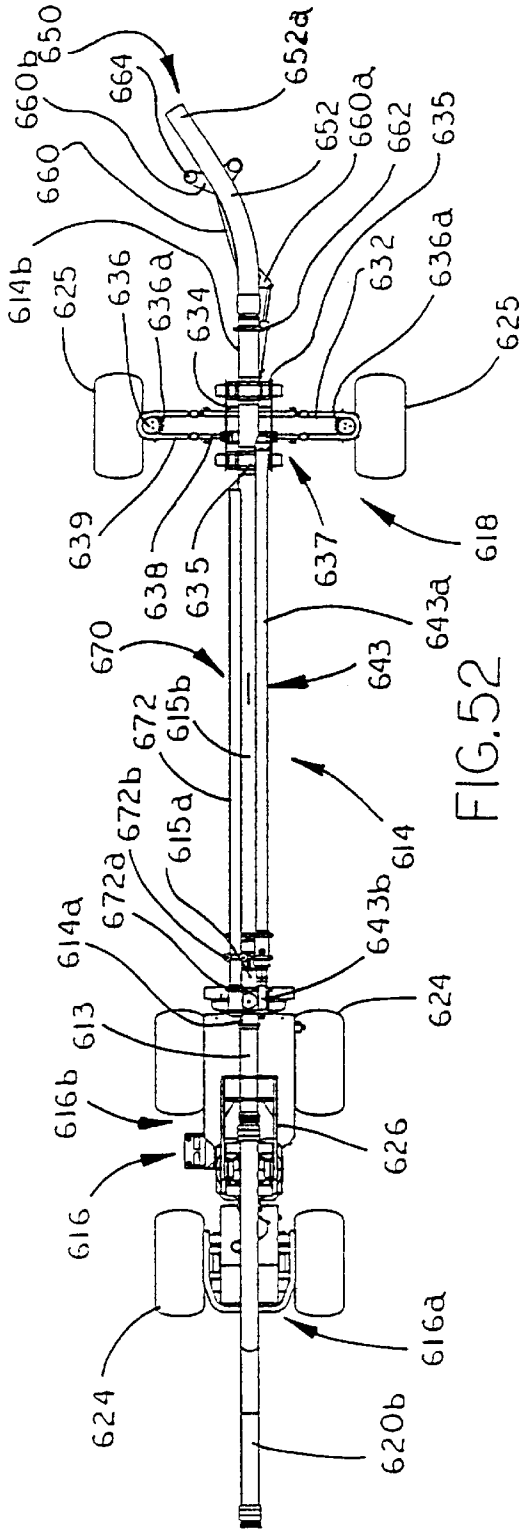
650
660b
664
652a
652
660a
662
635
660
614b
625
636
636a
634
632
636a
625
639
638
635
637
618
643a
670
643
672
615b
614
672b
615a
672a
614a
643b
624
613
616b
626
616
616a
624
620b

FIG.52

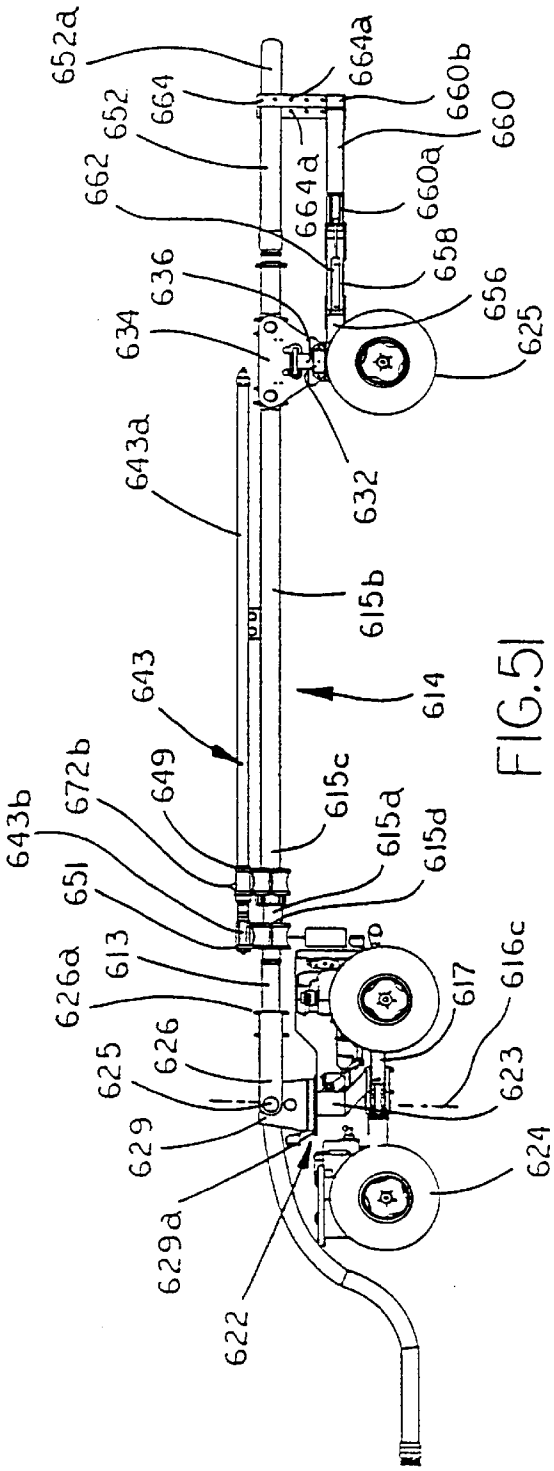
652a
664a
660b
664
652
660
662
664a
660a
658
636
656
634
625
643a
632
615b
643
614
649
672b
615c
643b
615a
615d
651
613
626a
617
616c
626
625
623
629
624
629a
622

FIG.51

CONCRETE PLACING AND SCREEDING APPARATUS AND METHOD

CROSS REFERENCE TO RELATED APPLICATION

The present application claims the benefit of U.S. Provisional application Ser. No. 60/172,499, filed Dec. 17, 1999 by Philip J. Quenzi et al., which is hereby incorporated herein by reference in its entirety.

BACKGROUND OF THE INVENTION

This invention relates generally to concrete placing devices and, more particularly, to a low profile concrete placing and screeding apparatus for placing concrete in floors of buildings or in other areas where overhead obstructions preclude or limit the use of a boom truck.

It is known to use a pumping truck and pipe or a boom truck to place concrete at a targeted site. The boom truck, which comprises an articulated boom and pipe apparatus, where the pipe sections are pivotable about one or more generally horizontal axes, may be used to reach areas which are at a greater distance from the pumping truck or which are at a different height, such as an upper floor of a building or the like. However, it is difficult to use conventional boom trucks between floors of buildings because there may not be enough clearance between the floor and the overhead structures to reach the entire floor with the boom. The boom of the boom truck may also not be sufficiently long to reach distant areas of the targeted floor, thus requiring additional pipes to carry and place the concrete at those areas. An additional concern with boom trucks is that these trucks are typically too heavy to be driven onto raised or elevated slabs in order to be able to reach upper floors or levels of buildings.

In areas where boom trucks cannot reach or where a pumping truck is available while a boom truck is not, a movable pipe or multiple sections of pipe may be connected to the concrete pump and extended therefrom in order to reach the targeted area. Although such systems are capable of reaching remote areas from the pumps, it is difficult to manage the large and heavy pipes in order to properly place the concrete. Although several devices have been proposed which provide a mounting base for a movable pipe assembly to pivotally extend therefrom, it is still difficult to manage such devices, since the base must be manually moved once the pipes have spread the concrete at each particular location.

Additionally, after the pumping truck or boom truck has placed the concrete at the targeted areas via pipes or a boom, a screeding device must be positioned at the targeted areas to compact and smooth the concrete before it cures. Typically, the concrete may be placed in a targeted region of a floor and then the screeding device may be positioned at this region to smooth and pack the concrete while the placing system is moved to the next targeted region. This may require further movement of the placing apparatus in order to make room for the screeding apparatus, prior to placing the concrete at the next, typically adjacent, targeted location.

Accordingly, there is a need in the art for a low-profile placing apparatus which is easy to manage and/or maneuver in areas where there is low overhead clearance. The apparatus must be capable of reaching areas of a construction site which are remote from the location of a pumping truck. Additionally, the apparatus must be of relatively low weight, in order to be operable on raised or elevated slabs so as to

be able to place concrete on upper floors or levels of buildings. There is also a need for an improved, more efficient method and apparatus for screeding the poured and/or placed concrete in such remote, difficult to reach areas, especially where overhead clearance is low, or on raised, elevated slabs.

SUMMARY OF THE INVENTION

The present invention is intended to provide a concrete placing and screeding apparatus which is especially useful and operable in areas with low overhead clearance, or on raised, elevated slabs, or in other locations where the support of high weight apparatus is difficult. The apparatus is easily maneuverable to place the appropriate amount of concrete in each targeted area. Additionally, a screeding device may be implemented with the placing apparatus, in order to combine the placing and screeding operations.

According to a first aspect of the invention, a concrete placing device for placing uncured concrete at a support surface comprises a base unit, a conduit, and a movable support. The conduit comprises a supply end and a discharge end, wherein the discharge end comprises a discharge outlet and is generally opposite the supply end. The supply end is mounted to the base unit and is connectable to a supply of uncured concrete. The conduit is operable to dispense the uncured concrete through the discharge outlet. The movable support is operable to movably support the discharge end of the conduit at a position remote from the base unit. Preferably, the conduit is an extendable tube which is extendable and retractable relative to the base unit. Preferably, the base unit comprises a base portion and a swivel portion rotatably supported by the base portion. The supply end of the extendable tube is mounted to the swivel portion, such that the discharge end of the extendable tube is movable arcuately and/or radially relative to the base unit. Preferably, the concrete placing device further comprises a screeding device positioned at the discharge end of the conduit.

In one form, the movable support comprises a wheeled vehicle, preferably having four wheels. In another form, the movable support comprises an air cushion device. In yet another form, the movable support comprises a plurality of wheel trolleys which are rotatable about a generally closed path via a drive motor and drive member such that the trolleys and the movable support are movable in a direction generally axially relative to the wheels of the wheel trolleys.

According to another aspect of the present invention, a concrete placing and screeding apparatus comprises a movable support, a conduit having a supply end and a discharge end, and a screeding device at the discharge end of the conduit. The supply end of the conduit is generally opposite the discharge end and is connected to a supply of uncured concrete to be placed. The conduit is supported by the movable support.

According to yet another aspect of the present invention, a concrete apparatus for placing and/or screeding uncured concrete at a support surface comprises one or both of a concrete supply unit and/or a screeding device, as well as an air cushion support unit. The concrete supply unit provides uncured concrete to the support surface, while the screeding device is operable to grade and smooth the uncured concrete on the support surface. The air cushion support unit is operable to support one or both of the concrete supply unit and/or the screeding device.

In one form, the concrete supply unit comprises a conduit having a supply end for receiving uncured concrete for

discharging the uncured concrete on the support surface. Preferably, the conduit is extendable between the extended and retracted position relative to a base unit. The extendable conduit may be a telescopingly extendable tube, which is mounted to a pivotable base unit. The extendable conduit may otherwise be an articulated tube which comprises at least two sections which are pivotable about a joint, with the supply end of the conduit being mounted to a generally fixed base unit. The conduits, support units and/or base units are operable to move the discharge end of the conduit and/or the screeding device both arcuately and radially with respect to the base unit.

According to yet another aspect of the present invention, a concrete placing apparatus for placing uncured concrete at a support surface comprises an extendable conduit having a supply end and a discharge end, at least one air cushion support unit, which is operable to support the extendable conduit, and a base unit which is operable to support the supply end of the extendable conduit. The extendable conduit is operable to receive a supply of uncured concrete and discharge the uncured concrete to the support surface via the discharge end of the conduit.

In one form, the base unit is substantially fixed, and may be secured via two or more adjustable cables. Preferably, the extendable conduit is an articulated conduit having at least two sections pivotable about a generally vertically axis relative to one another. In one form, the articulated conduit may comprise at least three sections, with at least two air cushion supports supporting two of the sections of the conduit. In another form, the conduit may be flexible in a horizontal direction, while substantially precluding upward and downward flexing, such that the conduit may be bent or pivoted relative to the base unit about one or more generally vertical axes.

In another form, the extendable conduit may be telescopingly extendable to radially extend and retract the discharge end with respect to the base unit. The extendable conduit may further be arcuately movable with respect to the base unit.

Preferably, the extendable conduit is mounted to the air cushion support with a trunnion which allows for pivotal movement of the extendable conduit about a generally horizontal axis, while also allowing pivotal movement of the conduit about an axis extending generally along the extendable conduit.

Accordingly, the present invention provides a placing and/or screeding apparatus which is easily maneuverable and which may be easily implemented in areas where a boom truck cannot reach, such as remote areas of buildings or areas with low overhead clearance, or raised or elevated decks or slabs where weight may be a concern. The air cushion devices function to movably support the concrete supply and/or a screeding device and spread the load of the units over a larger area via a cushion of air, such that the pressure exerted by the movable units on the support surface is substantially reduced. The air cushion units also facilitate movement of the conduit and/or screeding device over areas which are already covered with uncured concrete, such that concrete may be placed or smoothed in those areas without disturbing the already placed uncured concrete. The conduits are preferably extendable and may be extended and retracted relative to a base unit, such that the discharge end of the conduit and/or the screeding device may be moved throughout the targeted area to place or screed concrete in substantially all locations within the targeted area.

These and other objects, advantages, purposes and features of this invention will become apparent upon review of the following specification in conjunction with the drawings.

BRIEF DESCRIPTION OF THE DRAWINGS

FIG. **1** is a plan view of an embodiment of the present invention as it may be used to place concrete;

FIG. **2** is a perspective view of the embodiment shown in FIG. **1**, with the apparatus in a retracted state;

FIG. **3** is a side view of the apparatus of FIG. **2**, and further includes a crane assembly mounted at the base unit;

FIG. **4** is a plan view of the embodiment of FIGS. **1–3**, shown in an extended state;

FIG. **5** is a hydraulic schematic of the embodiment shown in FIG. **3**;

FIG. **6** is a perspective view of an alternate embodiment of the present invention in a retracted state, with a screeding device positioned at a discharge end of the pipe assembly;

FIG. **6**A is an enlarged view of the screeding device shown in FIG. **6**;

FIG. **7** is a perspective view of the embodiment of FIG. **6**, with an alternate screeding device, shown in its extended state;

FIG. **8** is a side view of the wheeled embodiment shown in FIG. **7**, with an operator control positioned at the lead vehicle, shown in its retracted state;

FIG. **9** is a plan view of the apparatus of FIGS. **6** and **7**, as the apparatus is used to place and smooth concrete within a given targeted area;

FIG. **10** is a hydraulic schematic of the embodiment shown in FIGS. **6** through **9**;

FIG. **11** is a perspective view of another alternate embodiment of the present invention with a rotatable screeding head positioned at the discharge end of the tube assembly, shown in a retracted state;

FIG. **12** is a side view of the embodiment shown in FIG. **11**;

FIG. **13** is a top plan view of the embodiment shown in FIG. **11**;

FIG. **14** is a hydraulic schematic of the embodiment of the present invention shown in FIGS. **11–13**;

FIG. **15** is a perspective view of another alternate embodiment of the present invention, with the base and lead units comprising a two-fan air cushion device, shown in its retracted state;

FIG. **16** is a similar perspective view as FIG. **15**, with the apparatus shown in its extended state;

FIG. **16**A is a perspective view of the base unit of FIGS. **15** and **16**, with the pipe assembly pivotally mounted to the base unit and casters positioned around the base unit;

FIG. **17** is a plan view of an alternate embodiment of the embodiment shown in FIGS. **15–16**, with each air cushion device comprising four lift fans, shown in its retracted state;

FIG. **18** is a sectional view of the base unit, taken along the line XVIII—XVIII in FIG. **17**;

FIG. **19** is a sectional view of the lead unit taken along the line XIX—XIX in FIG. **17**, with the pipe removed from the lead unit and a directional fan positioned thereon;

FIG. **20** is a hydraulic schematic of the embodiment shown in FIGS. **15** though **19**;

FIG. **21** is an alternate embodiment of the present invention shown in FIGS. **15–20**, with a screeding device positioned at the discharge end of the tube assembly, shown in its retracted state;

FIG. **22** is a hydraulic schematic of the embodiment shown in FIG. **21**;

FIG. **23** is a plan view of an embodiment comprising an air cushion lead vehicle and screeding device, showing that the air cushion device may be movable over areas where the concrete has already been placed;

FIG. **24** is a perspective view of another alternate embodiment of the present invention which has a lead unit which comprises a plurality of wheel trolleys which are movable in a generally axial direction to move the tube assembly arcuately relative to the base unit;

FIG. **25** is an end view of the lead unit shown in FIG. **24** as viewed from the line XXV—XXV in FIG. **24**;

FIG. **26** is a perspective view of the embodiment shown in FIG. **24** in its extended state;

FIG. **27** is an end perspective view of the embodiment shown in FIGS. **24** though **26**;

FIG. **28** is a side view of an alternate embodiment of the invention shown in FIGS. **24–27**, with the base unit comprising an air cushion device, shown in its retracted state;

FIG. **29** is a perspective view of another alternate embodiment of the present invention which comprises a screeding device positioned at the discharge end of the tube assembly, shown in its retracted state;

FIG. **30** is a hydraulic schematic of the embodiment shown in FIG. **29**;

FIGS. **31** through **34** are plan views of the present invention and show a portion of the process for placing concrete in a targeted area;

FIG. **35** is an upper perspective view of another embodiment of a placing apparatus of the present invention, with multiple movable air cushion support units supporting an articulated tube assembly;

FIG. **36** is a top plan view of the placing apparatus of FIG. **35**;

FIG. **37** is a perspective view of a base unit useful with the placing apparatus of FIG. **35**;

FIG. **38** is an enlarged view of one of the joints of the articulated tube assembly with the tube assembly in its extended or straightened orientation;

FIG. **39** is a perspective view of a mounting trunnion useful with the air cushion units of the present invention;

FIG. **40** is an end view of one of the air cushion support units of FIG. **35**;

FIG. **41** is a sectional view taken along the line XLI—XLI in FIG. **40**;

FIG. **42** is a perspective view of the placing apparatus of FIG. **35**, as implemented on an elevated support surface;

FIGS. **43–48** are plan views of the present invention and show a portion of the process for placing concrete in a targeted area;

FIG. **49** is a perspective view of yet another embodiment of the present invention, with a flexible tube assembly being supported by multiple air cushion support units;

FIG. **50** a perspective view of another embodiment of the present invention, with a telescoping tube assembly supported by an articulating, wheeled base unit and a steerable wheeled movable support;

FIG. **51** is a side elevation of the embodiment of FIG. **50**; and

FIG. **52** is a top plan view of the embodiment of FIGS. **50** and **51**.

DESCRIPTION OF THE PREFERRED EMBODIMENTS

Referring now specifically to the drawings, and the illustrative embodiments depicted therein, a placing apparatus **10** for placing concrete **12** in a targeted or designated area comprises a tube assembly, **14**, a base unit **16**, and a lead unit or movable support **18** (FIG. **1**). Concrete placing device **10** is a low profile device and is thus usable in various locations, such as on different levels or floors of buildings or the like which may have low overhead clearance. The tube assembly **14** is preferably extendable and retractable, and is connectable at a supply end **14***a* to a concrete supply tube **20**, which is connectable to a pumping truck **22** or other means for supplying uncured concrete through the supply tubes **20**. Supply end **14***a* is preferably adapted to be connectable to a conventional supply hose or pipe, such as a 5 inch or 6 inch diameter concrete supply hose or pipe. The extendable tube assembly **14** places the concrete **12** via a discharge outlet **14***c* at an outer end **14***b* of tube assembly **14**. Outer end **14***b* of tube assembly **14** is movably supported by movable support or lead vehicle **18**, while supply or inner end **14***a* is preferably pivotally supported at base unit **16**. Concrete placing device **10** is operable to extend and retract the extendable tube assembly **14** and to pivot the tube assembly relative to the base unit **16**, in order to move discharge outlet **14***b* of tube assembly **14** both arcuately and radially relative to base unit **16** while concrete is being dispensed therefrom. The terms tube, pipe, conduit and the like are used herein to describe any means for conveying uncured concrete or the like from a supply of uncured concrete to a discharge outlet of the placing apparatus, and may include cylindrical pipes/tubes, open channels or troughs, hoppers or bins, or any other form of conduit, unless otherwise noted, without affecting the scope of the present invention. Although described herein as an apparatus for placing and/or screeding uncured concrete, the present invention may otherwise place or dispense other materials, such as sand, gravel, or the like, onto a support surface.

Wheeled Units

Preferably, base unit **16** and lead unit or movable support **18** both comprise a four wheeled vehicle, as shown in FIGS. **1–4**. Base unit **16** and lead unit **18** both comprise a frame **16***d* and **18***d*, which houses a power source **28** (FIG. **5**). Preferably, the power source **28** of each vehicle is an hydraulic pump which is interconnected with a reservoir **38** and a plurality of solenoid controls **40**. A plurality of electronic controls **42** are provided to actuate one or more of the solenoids **40** to pressurize one or more hydraulic fluid lines and thus control driving the wheels, steering the wheels, and/or extension and retraction of one or more of the tubes of tube assembly **14**, as discussed below. Power source **28** preferably is operable to drive or rotate each of the wheels **24** independently of the others via an hydraulic motor **44** at each wheel (FIG. **5**). Each pair or set of wheels is rotatably mounted to an axle **26**. Each pair of wheels on a given axle may be turned or steered together to change the direction of base or lead unit **16** or **18**

Because both the base and lead units **16** and **18** are four wheel drive and are steerable by both axles, the units may be easily maneuvered into the desired area, even when there may be obstructions, such as vertical support columns or the like, present in the area. The lead vehicle **18** may be driven outwardly from base unit **16** to extend the tubes and then driven arcuately relative to base unit **16** to pivot tube assembly **14** relative to base unit **16**. Lead unit **18** may be remotely controlled via wire or radio controls (not shown) or may further comprise an operator seat or station **30** and controls for an operator to sit or stand on the lead vehicle and drive or otherwise control it while also controlling the placing of the concrete, as shown in FIG. **8**. Alternately, the

lead unit **18** may be controlled via a programmable control, such that the unit **18** is driven along a planned pattern relative to the base unit **16**, without any manual intervention required.

Preferably, both base unit **16** and movable support **18** further comprise a swivel portion **16***a* and **18***a*, respectively. Swivel portions **16***a* and **18***a* are rotatably mounted to respective base portions **16***b* and **18***b*, such that each may be rotated 360° relative to the respective base portions of base unit **16** and movable support **18**. Swivel portions **16***a* and **18***a* each preferably comprise a pair of upwardly extending supports or trunnions **16***c* and **18***c*, which further include a notch or groove for receiving corresponding pivot/support pins **14***d* and **14***e*, respectively, on tube assembly **14**, as discussed below.

As shown in FIG. **3**, base unit **16** may further comprise a crane device **36**, which is operable to lift and move sections of the supply hose or pipe **20**, thereby easing the process of disconnecting and reconnecting supply end **14***a* of tube assembly **14** to the supply tube **20** when base unit **16** is moved to a new location. Crane member **36** comprises an extendable arm **36***a*, which is pivotally mounted to a base portion **36***b*, which is further mounted to swivel portion **16***a* of base unit **16**. The base portion **36***b* is preferably mounted to trunnion **16***c* on swivel portion **16***a* and thus pivots with tube assembly **14** relative to base portion **16***b* of base unit **16**. Extendable arm **36***a* may then be raised or lowered via an hydraulic cylinder **36***c* to lift or lower sections of the supply tube or pipe **20**, which may or may not be filled with concrete at the time. Hydraulic cylinder **36***c* is preferably operable via the hydraulic pump **28** positioned on base unit **16**.

Tube assembly **14** is preferably extendable and comprises a plurality of nested or telescoping pipes or tubes, **15***a*, **15***b*, **15***c* and **15***d*, which slidably engage one another to extend and/or retract the tube assembly relative to base unit **16**, as best shown in FIGS. **2–4**. An innermost tube **15***a*, which also comprises the supply end **14***a* of tube assembly **14**, preferably further includes a pair of cylindrical support pins **14***d* extending laterally outwardly from either side of tube **15***a* at supply end **14***a*. Inner tube **15***a* is pivotally mounted to a swivel portion **16***a* of base unit **16** via support pins **14***d* being received in the grooves of trunnions **16***c*. The pins **14***d* may pivot about a horizontal axis to allow for raising or lowering of one of the units relative to the other in areas where uneven terrain is encountered by placing apparatus **10**. Additionally, because the pipe **15***a* is mounted to swivel portion **16***a* of base unit **16**, the pipe assembly **14** may pivot or swivel about a vertical axis relative to base portion **16***b* of base unit **16**. The tube assembly is thus preferably mounted to base unit **16** via a two axis mounting structure. However, other means for mounting the tube assembly to the base unit may be implemented, without affecting the scope of the present invention.

Preferably, the tubes are nested within one another and slidable relative to each of the other tubes to telescopingly extend and/or retract tube assembly **14** in response to actuation of one or more controls on either the lead or base unit **18** or **16**. Preferably, as best shown in FIG. **4**, three of the tubes **15***a*, **15***b* and **15***c* of telescoping tube assembly **14** are positioned between base unit **16** and lead unit **18** such that they extend and retract in response to relative movement of the base and lead units **16** and **18**. The telescopic pipes are arranged so the concrete passes from the smallest pipe **15***a* at the concrete inlet to successively larger diameter pipes toward the discharge end **14***b*. This provides an "accumulator" effect and reduces surging due to the periodic concrete pump cycle.

The third tube **15***c* preferably includes a pair of cylindrical support pins **14***e*, which extend laterally outwardly from either side of tube **15***c* toward an outer end thereof. The support pins **14***e* of outer or third pipe **15***c* are preferably pivotally mounted within the grooves or openings of trunnions **18***c* of swivel portion **18***a* of lead unit **18**, in a similar fashion as base unit **16**, such that pipe assembly **14** is also pivotable or rotatable about both a vertical axis and a horizontal axis relative to base portion **18***b* of lead unit **18**.

Preferably, a fourth, outermost tube or pipe **15***d* is positioned outwardly of lead unit **18** and is further extendable and retractable relative thereto via a powered extending device **32**, such as an hydraulic cylinder or the like. The discharge outlet **14***c* is positioned at an outer end of outer pipe **15***d*, and is preferably directed generally downwardly to facilitate placing of concrete at the desired locations. Extending device **32** preferably comprises a conventional hydraulic cylinder **32** and a rod and piston assembly **33**, as is known in the art. An outer end **32***a* of cylinder **32** is fixedly mounted to a bracket **17***a* on outer tube **15***d* while an inner end **32***b* of cylinder **32** is slidably mounted on the next inner tube **15***c* via a bracket or collar **17***b*. A third bracket **17***c* is provided at an inner end of outer tube **15***d* and fixedly secures cylinder **32** at the inner end of the outer tube **15***d*. An end **33***a* of rod **33** is then fixedly mounted at an inward end of the next inwardly positioned tube **15***c* such that extension of rod **33** relative to cylinder **32** causes outward movement of outer tube **15***d* along inner tube **15***c*, as hydraulic cylinder **32** moves longitudinally outwardly with respect to tube **15***c*, while the sliding collar **17***b* slides along tube **15***c*. Brackets **17***a* and **17***c* support cylinder **32** and push outer tube **15***d* outwardly along tube **15***c* as cylinder **32** is moved outwardly via extension of rod **33**. Preferably, hydraulic cylinder **32** is powered by power source or hydraulic pump **28** positioned on lead unit **18**. The other tubes **15***a*–**15***c* may be extended and retracted by driving the lead vehicle in a generally longitudinal direction with respect to the tube assembly **14**, and/or may be extended and retracted via one or more hydraulic cylinders, as discussed in detail below. Although not shown, concrete placing device **10** further comprises a valve or the like in tube assembly **14** to control the flow of concrete therethrough independently of the controls of the pumping truck **22**, as is known in the art.

In the illustrated embodiments, the tubes **15***a*–**15***d* are retractable such that placing apparatus **10** is approximately 17 feet long from supply end **14***a* to discharge end **14***b* of tube assembly **14**. Preferably, tube assembly **14** is positioned on lead vehicle **18** such that tube **15***c* and outer tube **15***d* extend approximately 8 feet from their connection point (at support pins **14***d* on tube **15***c*) on lead vehicle **18** when tube **15***d* is fully retracted. The tube assembly **14** is then extendable a total of approximately 31 feet such that the placing apparatus **10** spans approximately 48 feet from supply end **14***a* to discharge end **14***b* when extended. Inner tubes or pipes **15***a*, **15***b* and **15***c* extend such that lead unit **18** may travel approximately 24 feet from its initial, retracted position, while outer pipe **15***d* is further extendable via hydraulic cylinder **32** approximately 7 additional feet from pipe **15***c* and lead vehicle **18**.

Referring now to FIG. **5**, concrete placing apparatus **10** preferably includes at least one open loop, closed center hydraulic system for operation of all of the fluid motors and fluid cylinders on each of the base and lead units **16** and **18**. FIG. **5** shows the hydraulic system for the lead unit **18**, with the solenoid and cylinder for the crane **36** of the base unit **16** shown in phantom. An hydraulic pump **28** is provided which draws hydraulic fluid from a reservoir or tank **38**. The pump

28 may be powered by a battery or diesel or gasoline powered internal combustion engine (not shown). The pump 28 provides hydraulic fluid under pressure through an hydraulic line 28*a* to a bank or series of hydraulic control valves 40, which are also positioned on the respective units 16 or 18. Each of the control valves 40 includes a series of individual, three position valves which may be shifted to open, close or reverse the hydraulic fluid flow through the appropriate motor or cylinder via actuation of an electronic control 42. Each of these valves further includes a flow control valve which may be adjusted or opened or closed to vary the speed of the hydraulic fluid flow through the valve to control the speed of operation of the respective mechanism. Fluid is returned to reservoir 38 via a return line 28*b*.

As shown in FIG. 5, a first control valve 40*a* may control the drive motors 44 for individually driving the wheels 24 of the respective unit via hydraulic lines 45*a* and 45*b*. Hydraulic line 45*a* provides fluid to a first port 44*a* on each motor 44, via a counterbalance valve 46 and hydraulic line 48*a*, for driving the wheels in a forward direction, while hydraulic line 45*b* is connected to second ports 44*b* on motors 44, via counterbalance valve 46 and hydraulic line 48*b*, for driving the wheels in a reverse direction. A dual counterbalance or load control valve 46 is provided in the hydraulic lines 45*a* and 45*b* which is generally a dual piloted relief valve with pilot pressure for one line being supplied from the opposite port of the motor. This provides counterpressure to the lines in order to prevent the vehicle from excessively accelerating or running away when driving the respective unit downhill. For example, if the vehicle is travelling forward, pressurized fluid in line 45*a* travels through a forward portion 46*a* of load control valve 46 and into the forward ports 44*a* of motors 44 via hydraulic line 48*a*. If the unit begins travelling downhill rapidly in the forward direction, the pressure at the forward ports 44*a* would decrease toward zero, as the motors rotate at a faster rate than the fluid is being provided by pump 28. This drop in pressure causes a corresponding reduction in pilot pressure to the outlet or reverse ports 44*b* of motors 44 and in the reverse hydraulic lines 48*b*, which function to return the fluid toward reservoir 38 when the vehicle is being driven in a forward direction. When the pilot pressure is reduced to or near to zero p.s.i., the load control valve is at its maximum setting and thus provides back pressure to the reverse line to slow down the rotation of the wheels and thus prevent the machine from travelling too fast or getting away.

Additionally, a traction control valve 50 may also be provided at each axle 26 to divide the flow of fluid to the left and right wheels of each axle in order to prevent a wheel from spinning freely if it encounters an area with poor traction. Each traction control valve 50 comprises a solenoid operated bypass valve that is normally open. When poor traction conditions are encountered, the solenoid valve may be energized to split the flow and variably adjust the lines to prevent slippage of one of the wheels. A third traction control valve (not shown) may also be provided to divide the flow between the front and back axles, in order to further improve the traction of the vehicles.

A second hydraulic solenoid valve 40*b* is also provided to control the steering system 52 via a pair of hydraulic lines 54*a* and 54*b*. As shown in FIG. 5, this may be accomplished via a pair of hydraulic cylinders 56*a* and 56*b* at opposite axles of the respective unit. Each steering cylinder 56*a* and 56*b* comprises a double ended piston and rod assembly 58. Each rod end 58*a* and 58*b* of the respective rods connects to a corresponding wheel control arm 59*a* and 59*b* (FIG. 4) at an opposite end of the respective axle. Preferably, rod ends 58*a* of a front cylinder 56*a* are connected to control arms 59*a* positioned rearwardly of the front axle, while rod ends 58*b* of a rear cylinder 56*b* are connected to control arms 59*b* positioned forwardly of the rear axle, such that the cylinders are operable to pivot or steer the wheels at each axle in a generally opposite direction to the wheels of the other axle. Alternately, the control arms may be positioned outwardly from their respective axles, such as forwardly of the front axle and rearwardly of the rear axle, to accomplish the same steering effect. This approach is operable to turn or steer all four wheels together to facilitate a tighter turning radius and thus improve maneuverability of the base and lead units. The steering cylinders are equipped with piston mounted bypass shuttle valves (not shown), which open when the cylinders reach full stroke in either direction. This allows the wheels to be resynchronized at full steer in the event of cylinder leakage.

As pressurized fluid is supplied through one of the lines 54*a*, the piston/rod assembly 58 in the front cylinder 56*a* moves along the cylinder to move control arms 59*a* and thus cause the wheels on the front axle of the vehicle to pivot together relative to their axle. A connecting hydraulic line 60 connects one end of front cylinder 56*a* to an opposite end of the other, rear cylinder 56*b*, so as to cause a corresponding movement of the piston/rod assembly 58 within the other cylinder 56*b*, thereby moving the control arms 59*b* and causing the wheels on the rear axle of the vehicle to pivot in tandem with the first wheels, but in a generally opposite direction. This is accomplished by positioning the control arms toward opposite ends of the vehicle with respect to their axles, such as one set being forwardly of the rear axle while the other set is rearwardly of the front axles, as is known in the art. Although described as having a front and rear axle, clearly the units 16 and 18 are drivable in either direction.

A dual counterbalance or load control valve 62 is further provided to prevent unwanted steering caused by one or more of the wheels hitting obstructions as the vehicle travels along the ground. The counterbalance 62 is operable in a similar manner as load control valve 46 discussed above with respect to the wheel drive system. Although shown as providing steering to each axle simultaneously, clearly the present invention may be operable to steer the wheels on only one axle at a time, or to provide a "crab" steer mode, as would be obvious to one skilled in the art, without affecting the scope of the present invention.

With respect to the lead unit or movable support 18, a third solenoid control valve 40*c* may be provided to provide pressurized fluid to hydraulic cylinder 32 in order to extend or retract outer pipe 15*d* relative to movable support 18. Solenoid valve 40*c* may provide pressurized fluid to outer end 32*a* of hydraulic cylinder 32 to cause extension of the piston/rod 33 via an hydraulic line 64*a*, while a second hydraulic line 64*b* is connected at inward end 32*b* of hydraulic cylinder 32 to allow fluid to return to reservoir 38 as piston/rod assembly 33 extends from hydraulic cylinder 32. Solenoid control valve 40*c* is also operable to pressurize hydraulic line 64*b*, such that the piston assembly 33 is moved in the opposite direction to retract outer tube 15*d* relative to movable support 18 and the inner tubes 15*a*, 15*b* and 15*c*.

With respect to the base unit 16, an additional solenoid control valve 40*d* may be provided to control extension and retraction of the hydraulic cylinder 36*c* on the crane device 36, if applicable, via a pair of hydraulic lines 66*a* and 66*b*. Preferably, the hydraulic system of base unit 16 includes crane device cylinder 36*c* while the hydraulic system of lead

unit **18** includes the extension cylinder **32**. As would be obvious to one skilled in the art, the hydraulic cylinder **36***c* is extendable and retractable by selectively pressurizing one of the hydraulic lines **66***a* and **66***b*, respectively, while the other line functions to return hydraulic fluid to reservoir **38** via solenoid valve **40***d* and return line **28***b*.

Screeding Device

Referring now to FIGS. **6–10**, another embodiment **10'** of the present invention further comprises a screeding device **72** positioned at an outer end **14***b* of the extendable tube assembly **14**. The tube assembly **14** is substantially similar to tube assembly **14** discussed above with respect to placing apparatus **10** and will not be discussed further in detail herein. The tube assembly **14** is pivotally mounted to swivel portions **18***a* and **16***a* of a lead vehicle **18** and a base vehicle **16** in the same manner as discussed above. Base unit **16** and lead unit **18** are also identical to the units discussed above with respect to placing apparatus **10** and thus will not be discussed again in detail. Optionally, the base unit **16** may include a crane device **36** for raising and lowering sections **20***a* of the supply pipe **20**. Optionally, one or more movable units may support and transport a screeding device independent of any concrete supply conduit, such that the units are operable to smooth, level and/or grade concrete that has already been placed at the support surface.

Preferably, the screeding device **72** is a laser controlled screed mounted at the outer end **14***b* of the tube assembly **14**, and adjacent to the discharge nozzle **14***c*. The screeding device **72** is pivotally mounted at the outer end **14***b* so as to be pivotable from side to side in order to compact and smooth the concrete being placed by the placing and screeding apparatus. Preferably, screed **72** comprises a mounting beam **75**, which is mounted on an arm **74**, which is pivotally mounted at outer end **14***b* of tube assembly **14** and is pivotable about a pivot axis or swivel point **74***a* at the end of the tube. An hydraulic cylinder **76** is pivotally mounted at one end to a mounting bracket **78** on tube assembly **14** and pivotally mounted at an opposite end to a bell crank type arm or bracket **80**, such that extension and retraction of the hydraulic cylinder **76** pivots the entire screed **72** and arm **74** about swivel **74***a*.

The screeding device **72** is pivotable relative to tube assembly **14** in order to provide proper orientation of a plow **84** and/or other screeding components as the lead unit **18** and pipes **14** pivot arcuately relative to base unit **16**. For example, as shown in FIG. **9**, the screeding device **72** may be pivoted 45° in one direction as the tubes are rotated in a first direction, and then pivot 90° for an opposite orientation with respect to the tube assembly **14**, to provide proper orientation for arcuate movement in the opposite direction.

Screeding device **72** may be a conventional screeding device, or may be a laser controlled screed similar to the types disclosed in commonly assigned U.S. Pat. No. 4,655,633, issued to Somero et al., and/or U.S. Pat. No. 4,930,935, issued to Quenzi et al., the disclosures of which are incorporated herein by reference. Preferably, as shown in FIGS. **6** and **6**A, screed **72** is substantially similar to the screeding device disclosed in U.S. Pat. No. 4,930,935 and comprises a pair of generally vertical adjustable supports **82** which are adjustable via extension and retraction of a pair of hydraulic cylinders **83**. As cylinders **83** are extended or retracted, an inner support rod **82***a* is movable along and within an outer cylindrical sleeve **82***b*, which is fixedly secured to mounting beam or cross member **75**, such that a lower end **82***c* of supports **82** is vertically adjustable with respect to beam **75** and tube assembly **14**.

Because screed assembly **72** is preferably substantially similar, but to a smaller scale, to the screed assembly disclosed in U.S. Pat. No. 4,930,935, a detailed discussion of the screed assembly will not be repeated herein. Suffice it to say, as best seen in FIG. **6**A, screed assembly **72** preferably includes an elongated plow **84**, an auger **85** and a vibratory screed **86**. Plow **84**, auger **85** and screed **86** are all mounted to an end frame **87** at each end, each of which are connected to one another by a horizontal cross member **87***a*. Plow **84** is rigidly secured to frames **87** and is operable to establish a rough grade of the uncured concrete dispensed via dispensing nozzle **14***c*. Auger **85** is a spiral, continuous auger which is rotated via a shaft **85***b* rotatably driven by a motor **85***a* (FIG. **10**) to further smooth the concrete and to carry excess concrete toward one end of screed assembly **72**. Vibratory screed **86** comprises a screed strip or plate **86***a* and a rotatable shaft **86***b* which is driven via an hydraulic rotation motor **86***c*. A series of weights (not shown) are secured concentrically to the shaft **86***b* such that rotation of shaft **86***b* causes vibration of the screed strip **86***a* to smooth and compact the concrete. Vibration of the motor **86** and plow **84** is isolated from the remainder of the screed assembly **82** by a plurality of rubber mounts (not shown) which absorb the vibration and prevent vibration of the remainder of the plow, auger, screed assembly and the placing and screeding apparatus **10'**.

As discussed in U.S. Pat. No. 4,930,935, end frame **87** is preferably pivotally mounted at lower end **82***c* of supports **82** to allow pivoting of the frames **87** about a generally horizontal axis **87***b*. A pair of self-leveling cylinders **88** are mounted at an upwardly extending mounting plate **87***c* at each end frame **87**, with their opposite or rod end **88***a* mounted to a bracket **82***d* positioned at lower end **82***c* of supports **82**. Self-leveling cylinders **88** may then be extended or retracted to pivot end frames **87** about axis **87***b*, to maintain a level interface between plow **84**, auger **85** and screed **86** and the uncured concrete, preferably in response to an electronic leveling sensor (not shown). By maintaining the proper angle and orientation of the plow and screed with respect to the concrete, the plow is substantially precluded from digging into the concrete surface as it moves thereal-ong. The electronic level sensor detects when the plow pivots about horizontal axis **87***b* and provides a signal to the controls of the hydraulic cylinders **88** such that they extend or retract to counter the detected rotation of the plow, in the same manner as disclosed in U.S. Pat. No. 4,930,935 referenced above.

Preferably, screed assembly **72** further includes a pair of laser receivers (not shown), preferably mounted at an upper end **82***e* of vertical supports **82**. The hydraulic cylinders **83** are extendable and retractable to maintain the screed and plow assembly at the appropriate level with respect to a signal from a laser beacon projector, as disclosed in U.S. Pat. No. 4,655,633, referenced above. The laser receivers detect a reference plane generated by the projector, and the controls of screeding device **10'** automatically adjust the hydraulic cylinders **83** accordingly.

As shown in FIGS. **7** and **8**, a simplified screed assembly **72'** may be pivotally mounted at outer end **14***b* of pipe assembly **14** of placing and screeding apparatus **10'**. Screed **72'** is similar to screed **72** and preferably comprises a pair of vertical adjustable supports **82'** and a vibratory plow **84'**, which is movably mounted at a lower end of each of the supports **82'**. Similar to the vibratory screed **86**, discussed above, the vibratory plow may vibrate horizontally along pins **84***a'* in response to actuation of a vibrating motor (not shown). Preferably, vertical supports **82'** comprise laser

beacon receivers **89**, which are 360° omni-directional receivers which detect the position of a laser reference plane such as that provided by a long range rotating laser beacon projector (not shown). A control (not shown) receives and processes signals from the laser receivers and is operable to automatically adjust the level of the vibratory plow **84'** via a pair of hydraulic cylinders **83'** positioned along each vertical support **82'**.

As discussed above with respect to placing apparatus **10**, placing and screeding apparatus **10'** may be remotely controlled via a wire or radio signal, or may include an operating station **30** on the base or lead units **16** or **18** for an operator to drive and control the placing and screeding apparatus, as shown in FIG. **8**. The operating station **30** may comprise a seat **30***a*, steering wheel **30***b*, and controls for actuating the various solenoids **40** in order to control all aspects of the placing and screeding apparatus.

Referring now to FIG. **10**, an hydraulic schematic for lead unit **18** of placing and screeding apparatus **10'** is shown. The drive motors **44** and hydraulic cylinders **56***a* and **56***b* of steering system **52**, and pipe extending cylinder **32** are operable via solenoid valves **40***a*, **40***b* and **40***c* and pump **28**, in the same manner as discussed above with respect to FIG. **5**. Operation of the screeding assembly **72** or **72'** is preferably also provided via hydraulic pump **28** and associated hydraulic lines, cylinders, and motors, as discussed below. Pump **28**, reservoir **38**, and hydraulic solenoids **40** are preferably positioned in movable support **18**, in order to minimize the length of the hydraulic lines necessary to reach from the solenoids **40** to the hydraulic cylinders on the outer tube or on the screeding device.

In order to raise or lower screed **72**, a pair of hydraulic solenoids **40***e* and **40***f* is provided which provides pressurized fluid to a right and/or left screed elevation hydraulic cylinder **83***a* and **83***b* via a corresponding pair of hydraulic fluid lines **92***a* and **92***b* and **93***a* and **93***b*, respectively. Preferably two solenoids are provided to separately raise and lower each side of the screed assembly in order to change the angle of the plow and screed assembly, if desired. The hydraulic cylinders **83***a* and **83***b* function in a known manner to raise or lower either or both sides of the vibratory plow relative to the ground.

Furthermore, the screed self-leveling cylinders **88**, which are operable to level the plow **84** and screed **86** in response to a signal from the level sensor, are extended and retracted via pressurized fluid lines **94***a* and **94***b* and another hydraulic solenoid **40***g*. The two hydraulic cylinders **88** are plumbed together such that each cylinder extends and retracts the same amount as the other, thereby providing even and uniform pivoting of the plow, auger, and screed assembly. This provides a more uniform surface of concrete and further reduces the possibility of digging one end of the plow or screed into the uncured concrete.

Additionally, the vibratory motor **86***c* of screeding device **86** is preferably an hydraulically actuated motor and is actuated via a pair of hydraulic lines **96***a* and **96***b* and another hydraulic solenoid **40***h*. As hydraulic line **96***a* is pressurized, motor **86***c* causes rotation of shaft **86***b* which further causes vibration of screed **86**, in order to compact and smooth the concrete after it has been placed by the dispensing nozzle **14***b*. Hydraulic motor **85***a* for rotating or driving auger **85** is similarly actuated via a pair of hydraulic lines **97***a* and **97***b* and an hydraulic solenoid **40***i*.

In order to pivot the screeding device **72** relative to tube assembly **14**, hydraulic cylinder **76** may be extended or retracted via a pair of hydraulic fluid lines **98***a* and **98***b* and another hydraulic solenoid **40***j*. Hydraulic cylinder **76** is also preferably a conventional cylinder and may be extended and retracted in a known manner, as discussed above. Because screed **72** is preferably positioned at outer end **14***b* of tube assembly **14**, which is extendable and retractable relative to lead unit **18** via outer tube **15***d*, hydraulic lines **92***a*, **92***b*, **93***a*, **93***b*, **94***a*, **94***b*, **96***a*, **96***b*, **97***a*, **97***b*, **98***a* and **98***b* are preferably extendable and retractable with outer tube **15***d*. Preferably, the hydraulic lines are wound or coiled about a spring biased hydraulic hose reel (not shown), such that the hydraulic lines may extend and retract corresponding to extension or retraction of tube assembly **14**. The hose reels are spring biased to recoil the hydraulic lines as the outer tube, and thus dispensing nozzle **14***c*', is retracted relative to movable support **18**. The hydraulic lines may be joined and wound about a single hose reel or may be separately wound around separate hose reels, without affecting the scope of the present invention. Alternately, the hydraulic lines may be telescoping tubes or may otherwise extend and retract in any known manner between movable support **18** and screeding device **72**.

Rotatable Screed Head

Referring now to FIGS. **11–14**, a placing and screeding apparatus **10"** may comprise a rotatable screeding device **104** positioned at an outer dispensing nozzle **14***c*' of tube assembly **14**. Preferably, base unit **16**, movable support **18**, and tube assembly **14** are substantially similar to those described above with respect to placing apparatus **10**, such that no further discussion of their structural components and operation is required herein. At an outer end of the tube assembly **14**, a dispensing nozzle **14***c*' is mounted which includes a 90° elbow for directing the concrete in a generally downwardly direction. An opening is provided in an upper portion of nozzle **14***c*' for a shaft **112** of screeding device **104** to pass therethrough, as discussed below.

Rotatable screed **104** comprises a lift cylinder **106**, a rotational motor **108**, a vertical support **110** and a rotatable shaft **112** which extends through vertical support **110** and dispensing nozzle **14***c*' to connect to a rotatable screed head **114**. Rotatable head **114** is a generally cylindrically shaped tube with an open top and bottom and a lower ring **114***a*, which is upwardly turned at an outer edge **114***b* thereof. A plurality of ribs **116** extend from a center portion **114***c* of rotating head **114** outwardly, where shaft **112** is secured, to an outer, cylindrical ring **114***d* which defines the cylindrical head **114**. The lower ring **114***a* functions to compact the concrete as the head **114** is moved over the placed, but uncured concrete.

Hydraulic motor **108** is mounted to a bearing block **118**, which is secured between a pair of articulating support arms **120**, such that bearing block **118** and motor **108** are substantially precluded from rotating, while the motor may cause rotation of the shaft **112** of screeding device **104**. Hydraulic cylinder **106** is mounted at one end to an upper portion of dispensing nozzle **14***c*' and at another end to motor **108**, such that extension and retraction of hydraulic cylinder **106** lifts and lowers motor **108** and thus shaft **112** and rotating head **114**, while articulating arms **120** extend or fold in response to such vertical movement of motor **108**. Preferably, lift cylinder **106** is operable to automatically raise or lower motor **108**, shaft **112** and head **114**, in response to a signal from a laser receiver **119**, which is preferably mounted at an upper end of screeding device **104**. Lift cylinder **106** is controlled in response to the laser signal in a similar manner to the lift cylinders **83** and **83'** of screeding devices **72** and **72'**, discussed above.

During operation, concrete is provided through dispensing nozzle **14***c*' and received within cylindrical portion **114***d* of rotating head **114**. As the movable support **18** moves arcuately and/or the tubes **14** extend and/or retract, the screeding device **104** places concrete in the particular targeted areas and is operable to simultaneously spread and smooth the concrete as it moves therealong. Rotation of shaft **112** by motor **108** causes corresponding rotation of rotating head **114** to spread and smooth the concrete as the head is moved over the newly placed concrete. The lower ring **114***a* provides a generally smooth and flat surface which smoothes the uncured concrete as the head is rotated and moved radially and arcuately relative to the base unit **16**. Because the lower screed head **114** is generally circular and curved upwardly around the entire circumference of head **114**, screeding device **104** is operable to smooth and compact uncured concrete via movement in any direction, such that the screed device does not have to be pivoted 90° when lead unit **18** reverses its direction.

Referring now to FIG. **14**, an hydraulic schematic is shown for the movable support **18** of placing and screeding apparatus **10**". Because the drive system motors **44**, the cylinders **56***a* and **56***b* of the steering system **52**, and tube extension cylinder **32** are identical to those discussed above with respect to placing apparatus **10**, the details of these systems will not be repeated herein. Hydraulic cylinder **106** of screeding device **104** is extendable and retractable via a pair of hydraulic fluid lines **122***a* and **122***b* and an hydraulic solenoid **40***k*. Hydraulic solenoid **40***k* may be manually actuated, or preferably electronically actuated in response to a signal received from laser receiver **119** on screeding apparatus **104**. Additionally, hydraulic motor **108** is operable to rotate the rotatable head **114** of screeding device **104** in response to pressurized fluid being supplied to one of its ports **108***a* and **108***b* via hydraulic fluid lines **126***a* and **126***b*, respectively, and an hydraulic solenoid **40***m*. Because outer tube **15***d* of tube assembly **14** is extendable relative to movable support **18**, hydraulic lines **122***a*, **122***b*, **126***a* and **126***b* preferably comprise roll-up hoses, which are wound or coiled about a spring biased hydraulic hose reel (not shown), similar to the hydraulic lines of placing and screeding apparatus **10**', discussed above.

Air Cushion Units

Referring now to FIGS. **15–20**, an alternate embodiment **200** of the present invention comprises an extendable tube assembly **214**, a lead unit or movable support **218** and a base unit **216**. Base unit **216** and lead unit **218** of concrete placing apparatus **200** are air cushion devices, which comprise one or more lift fans **217**, which are operable to raise the units above the support surface via a cushion of air between the unit and the support surface. Because these units travel on a cushion of air and thus do not require wheels or the like travelling along the ground, these units may be used in areas where concrete has already been placed, in order to add more concrete or to screed the placed concrete, without damaging or displacing any of the already-placed concrete. Also, the cushion of air functions to spread out the weight of the units over a large area or foot print, which minimizes the pressure of the units on the support surface or ground. Due to the low ground pressure of these units, they are well suited to operation in areas with limited load holding capability, such as corrugated metal decks of elevated slabs. Similar to the movable wheeled units discussed above, the air cushion units are operable to support and move either a discharge conduit or pipe for placing uncured concrete or a screeding device for smoothing/grading already placed concrete, or both, without affecting the scope of the present invention.

As shown in FIGS. **15–17** and **19**, movable support or lead unit **218** may be generally disc shaped, with an upper disc portion **218***a* and a cylindrical side wall **218***b* extending downwardly therefrom. However, as shown in FIGS. **35–40** and **47**, the air cushion units may be generally rectangular-shaped, or hexagonal-shaped, or may be any other shape, without affecting the scope of the present invention. Movable support **218** may comprise two or four fans **217**, or any other number of fans which are capable of lifting the unit off the ground. A brush-skirt seal **219** extends around the lower circumference of each unit to at least partially restrict or contain the cushion of air beneath the movable support and to prevent excessive dust and the like from blowing outward when the fans are activated. Fans **217** comprise a motor **217***a* which is operable to rotate blades **217***b*. Fans **217** are preferably pivotally mounted about a horizontal axes or pin **221**, such that as the fans pivot slightly, the change in direction of air flow causes movement of the unit **218** along the ground, while still pushing enough air to support the unit above the ground. Preferably, the pivot axes **221** are generally parallel to one another and parallel to tube assembly **214**, such that pivoting of the fans causes a movement of the unit **218** generally normal to tubes **214**. Fans **217** are preferably mounted to lead unit **218** with their shafts **217***c* (FIG. **18**) extending generally vertically, such that the fan blades **217***b* are oriented generally horizontally with respect to the ground. Preferably, fans **217** are conventional fan and motor units, such as a Kohler 25 horsepower motor with a Crowley fan, or any other known and preferably commercially available fans and motors. Optionally, as shown in FIG. **19**, a directional fan **223** may be provided atop lead unit **218**. Directional fan **223** may be pivotally mounted to lead unit **218** such that a shaft **223***a* extends generally horizontally and supports and drives generally vertically oriented fan blades (not shown). Directional fan **223** may then be pivotable about a vertical axis or pivot **223***b* to push lead unit **218** in a direction generally opposite to the direction in which the fan blades are directed.

Movable support **218** further comprises a pair of upwardly extending brackets or trunnions **218***c*, which are fixedly mounted to disc portion **218***a*. Trunnions **218***c* further include a notch or groove **218***d* for receiving a support pin **214***e* on an outermost tube **215***d* of tube assembly **214**. Trunnions **218***c* are oriented to receive the tube assembly **214** such that tubes **214** extend generally between the two or four fans and motors and preferably generally parallel to the pivot axes **221** of the motors **217**.

Base unit **216** is similar to lead unit **218** in that it comprises two or four fan/motor assemblies **217** for lifting and supporting base unit **216** on a cushion of air above the ground. Base unit **216** further comprises an upper, disc shaped, swivel portion **216***a* and a lower, cylindrical side walled, base portion **216***b*, wherein the upper swivel portion **216***a* is rotatably mounted at an upper end of base portion **216***b*. A brush skirt **219** extends around a lower circumferential edge of the base portion **216***b* to provide a generally uniform engagement of the unit to the ground and to prevent excessive dust from being blown into the air when the fans are activated. Similar to lead unit **218** discussed above, each of the fan/motor assemblies **217** are preferably pivotally mounted to swivel portion **216***a* of base unit **216** along a pivot pin or axis **225**, such that a slight rotation of the fan motors relative to base unit **216** may cause the base unit **216** to move along the ground in a direction generally normal to the pivot axes **225**. Additionally, as shown in FIG. **16**A, base unit **216**, and/or movable support **218**, may include a plurality of casters, rollers or wheels **299** mounted to the frame

of the air cushion units to ease manual movement of the units when the engines are shut down.

Base unit **216** further comprises an S-shaped pipe connector **235** which further comprises an upper elbow **235***a* and a lower elbow **235***b*, which are pivotally connected together in a known manner via a pivotable connector **235***c* (FIG. **18**). An opening is provided through the side wall of base portion **216***b* for a passageway for supply tube **220**. A supply hose or pipe section **220** is then connectable to a lower and outer end **235***d* of lower elbow **235***b*, while extendable pipe assembly **214** is connectable to an outer and upper end **235***e* of upper elbow **235***a*. Upper elbow **235***a* further comprises a mounting bracket **237** which extends upwardly therefrom and includes a cylindrical pivot or mounting pin **237***a* extending outwardly from each side of bracket **237**. Similar to lead unit **218**, base unit **216** includes tube mounting trunnions **216***c*, which are mounted to an upper portion of swivel portion **216***a* and include a notch or groove **216***d* for receiving the pivot pin **237***a* of bracket **237** on upper elbow **235***a*, thereby pivotally securing upper elbow **235***a* to swivel portion **216***a*. Upper elbow **235***a* may then pivot about a generally horizontal axis, in order to accommodate changes in the level of tube assembly **214** when lead unit **218** may be positioned at a different height from base unit **216**. Clearly, other means for pivotally mounting connector **235** to base unit may be implemented, without affecting the scope of the present invention.

In order to secure swivel portion **216***a* of base unit **216** to base portion **216***b*, while allowing for relative rotation therebetween, a plurality of rollers are positioned around an outer, circumferential edge of base unit **216**. More particularly, as shown in FIG. **18**, base portion **216***b* comprises a plurality of lower, vertically oriented rollers **226**, which are positioned between an upper portion of cylindrical base portion **216***b* and an outer edge of swivel portion **216***a* and which are rotatable about horizontal pivot pins **226***a*. Rollers **226** engage an upper edge **216***e* of base portion **216***b* and a lower surface **216***f* of swivel portion **216***a* in order to support swivel portion **216***a* on base portion **216***b*, while allowing relative rotation therebetween. Furthermore, a plurality of brackets **227** extend upwardly from the upper portion of base portion **216***b* and provide vertical mounting pins **229***a* for mounting horizontal rollers **229** in spaced locations around an outer, circumferential edge **216***g* of swivel portion **216***a*. Rollers **229** function to prevent lateral movement of swivel portion **216***a* relative to base portion **216***b*, while still allowing relative rotation therebetween. Additionally, a plurality of upper rollers **231** are rotatably mounted to horizontal pins **231** a on brackets **227** to also prevent vertically upward movement of swivel portion **216***a* relative to base portion **216***b*, while again allowing relative rotation therebetween.

Preferably, an hydraulic rotation motor **233** (FIG. **18**) may be provided on base unit **216** to drive or rotate swivel portion **216***a* relative to base portion **216***b*, in order to cause arcuate movement of dispensing end **214***b* of tube assembly **214**. Preferably, as shown in FIG. **18**, motor **233** is mounted to swivel portion **216***a* and includes a toothed pinion **233***a*, which is rotatable via actuation of motor **233** and which engages a correspondingly toothed gear **233***b* extending around an inner circumferential edge **216***h* of base portion **216***b*. Actuation of motor **233** causes rotation of pinion **233***a*, which causes subsequent movement of gear **233***b* relative to motor **233**, such that swivel portion **216***a* is thus rotated about base portion **216***b* while being supported and guided by rollers **226**, **229** and **231**. Motor **233** may be operable in either direction, such that dispensing end **214***b* may be arcuately driven back and forth with respect to base unit **216**. Base portion **216***b* is substantially non-rotatable even when raised above the ground because the concrete supply pipes **220** are connected through the opening in base portion **216** and thus substantially preclude rotation of base portion **216***b*. Preferably, base unit **216** further comprises an hydraulic pump **228** and reservoir **238** (FIG. **20**), which is operable as a power source for rotation motor **233** and a plurality of tube assembly extenders, as discussed below.

Optionally, as shown in FIG. **16**A, pipe assembly **214** may pivot via a pivotable trunnion **216***c*' which is pivotable about a generally vertical axis via a turntable mounting arrangement of trunnion **216***c*' to base unit **216**. In the illustrated embodiment **200***a*, the upper pipe elbow **235***a*' is mounted to trunnion **216***c*' and is pivotally connected to a connector pipe section (not shown). The connector pipe section and a lower elbow (also not shown) are mounted to or supported at an upper portion or surface **216***i* of the air cushion unit, while a lower end **235***d*' of the lower elbow is connected to supply pipe **220**, which is also at least partially supported along the upper portion or surface of the air cushion base unit.

Extendable pipe assembly **214** is generally similar to extendable pipe assembly **14**, discussed above with respect to placing apparatus **10**, in that it preferably comprises a plurality of nested or telescoping pipes **215***a*, **215***b*, **215***c* and **215***d*. However, because lead unit **218** may not be operable to travel radially outwardly from base unit **216**, pipes **215***a*–**215***d* are extendable and retractable relative to one another via a plurality of hydraulic extending devices **243**, **245** and **247**. As best shown in FIGS. **15** and **16**, each hydraulic device **243**, **245** and **247** comprises an hydraulic cylinder **243***a*, **245***a*, and **247***a* and a rod/piston **243***b*, **245***b*, and **247***b*, respectively. An inward end **243***c* of hydraulic cylinder **243***a* is fixedly mounted to a bracket or collar **249** at an inner end of second tube **215***b*, while hydraulic cylinder **243** a is also slidably supported within another collar or bracket **251** mounted at an inner end of third tube **215***c*. An end **243***d* of rod **243***b* is also mounted to an inner end of first tube **215***a* via a bracket **253**. Similarly, an inner end **245***c* of hydraulic cylinder **245***a* is fixedly mounted to bracket **251**, while the cylinder **245***a* is slidably supported within another bracket **255**, which is fixedly mounted to an inner end of outer tube **215***d*. An end **245***d* of rod **245***b* is then mounted to bracket **249** on second tube **215***b*. Similarly, an inner end **247***c* of hydraulic cylinder **247***a* is secured to bracket **255** on outer tube **215***d*, while an inner end **247***d* of rod **247***b* is secured to bracket **251** on the third tube **215***c*.

Accordingly, as best shown in FIG. **16**, as rod **243***b* is extended from hydraulic cylinder **243***a*, second tube **215***b* is moved outwardly from innermost tube **215***a*. Similarly, as rod **245***b* is extended from cylinder **245***a*, third tube **215***c* is moved outwardly from second tube **215***b*, while collar or bracket **251** slides along cylinder **243***a*. Likewise, as rod **247***b* is extended from cylinder **247***a*, outer tube **215***d* and lead unit **218** are moved outwardly from tube **215***c*, while bracket **255** slides along cylinder **245***a*. Preferably, as discussed below with respect to FIG. **20**, each of the hydraulic cylinders **243**, **245**, and **247** are plumbed in series such that each rod is moved relative to its respective cylinders in a similar amount as the other rods and cylinders. The rods of the hydraulic cylinders preferably provide a dual passageway for fluid to pass through the rod and into the appropriate receiving cavity within the cylinder, as shown in FIG. **20**. Accordingly, an hydraulic line **241***d* need only be provided from an inner end of one cylinder to the rod end of the next outer cylinder, while a second hydraulic line **241***c* is provided from an outer end of each inwardly positioned hydrau-

lic cylinder inwardly along the cylinder to connect to the rod end of the next outwardly positioned cylinder, such that the hydraulic lines **241***c* and **241***d* remain fixed relative to their respective hydraulic cylinders and/or rod ends and thus do not require spring biased hose reels and hoses or the like to extend or retract the lines with the tube assembly **214** (FIGS. **15** and **20**). Although shown and described as being extendable and retractable via a plurality of hydraulic cylinders plumbed in series, the tube assembly may alternately be extendable and retractable via conventional hydraulic cylinders or any other known means, and may even be individually extendable and retractable relative to one another, without affecting the scope of the present invention.

Referring now to FIG. **20**, an hydraulic schematic is shown for base unit **216**. Power source or pump **228** is operable to draw hydraulic fluid from reservoir **238** and to extend and retract the hydraulic cylinders **243**, **245** and **247** via an hydraulic solenoid **240***n* and a pair of hydraulic fluid lines **241***a* and **241***b*. Preferably, pressurized fluid may be provided through hydraulic line **241** a in order to extend the tubes, while pressurized-fluid may be provided through hydraulic line **241***b* in order to retract the tubes. More particularly, hydraulic line **241***a* is preferably connected with a passageway **243***e* extending longitudinally through rod **243***b*, such that the pressurized fluid is received in an outer end portion or receiving cavity **243***f* of the hydraulic cylinder **243***a*. Similarly, hydraulic line **241***b* is connected to a second, outer passageway **243***g* through rod **243***b* to provide fluid to an inner end receiving cavity **243***h* of hydraulic cylinder **243***a*. Each of the cylinders **245** and **247** are similarly plumbed, with an hydraulic line **241***c* connecting the outer end cavity **243***f*, **245***f* of the inwardly positioned hydraulic cylinders **243**, **245** to the central passageway **245***e*, **247***e* of the rod of the next outwardly positioned hydraulic cylinder **245**, **247**, while a second line **241***d* connects the inner cavity **243***h*, **245***h* of the inwardly positioned hydraulic cylinder **243**, **245** to the outer passageway **245***g*, **247***g* of the rod of the next outwardly positioned hydraulic cylinder **245**, **247**. Accordingly, as pressurized fluid is provided through hydraulic line **241***a* or **241***b*, the rods **243***b*, **245***b* and **247***b* extend from or retract into their respective cylinders uniformly with the other rods and cylinders.

Hydraulic pump **228** is also operable to actuate hydraulic rotational motor **233** to rotate swivel portion **216***a* relative to base portion **216***b* of base unit **216**. Rotational motor **233** is preferably operable via a solenoid **240***o* and a pair of hydraulic fluid lines **257***a* and **257***b*, which are connected to ports **233***c* and **233***d*, respectively, of motor **233**. The rotational direction of the motor **233** is determined by which line **257***a* or **257***b* is pressurized by pump **228** and solenoid **240***o*, as would be apparent to one skilled in the art. As one of the fluid lines **257***a* or **257***b* is pressurized, rotational motor **233** functions to rotate pinion **233***a* to cause rotation of swivel portion **216***a* relative to base portion **216***b* via gear **122***b*, thereby swinging movably support **218** and outer end **214***b* of tube assembly arcuately with respect to base portion **216**.

Referring now to FIGS. **21** and **22**, an alternate embodiment **200'** is shown which is substantially identical to placing apparatus **200**, discussed above, except placing and screeding apparatus **200'** further comprises a screeding device **272** positioned at an outer end **214***b* of pipe assembly **214**. Screeding device **272** may be a conventional screeding apparatus, a plow, auger and vibratory screed assembly or a vibratory plow assembly, as discussed above with respect to placing and screeding apparatus **10'**, or may be a rotating head screed, similar to screeding device **104**, discussed above with respect to placing and screeding apparatus **10"**, and as shown in FIG. **21**, or may be any other known means for compacting and smoothing the uncured concrete as it is placed by the dispensing nozzle of tube assembly **214**. Because each of the screeding devices were already discussed above, a detailed description of their components and functions will not be repeated herein.

As shown in FIG. **22**, the hydraulic schematic for placing and screeding apparatus **200'** is substantially similar to the schematic for apparatus **200**, discussed above and shown in FIG. **20**. However, hydraulic pump **228** of placing and screeding apparatus **200'** may be further operable to raise and lower a rotating screed head device **272** via an hydraulic cylinder **206**. Hydraulic cylinder **206** may be extended or retracted by pressurized fluid being provided thereto via lines **222***a* and **222***b*, respectively. Hydraulic lines **222***a* and **222***b* are pressurized via an hydraulic motor **228** and hydraulic solenoid **240***k*, which may be actuated in response to a signal received from a laser receiver **207**, or may be manually actuated via a control panel or the like which may be mounted to base unit **216** or may be remotely located from the placing and screeding apparatus **200'**.

Similar to screeding device **104** of placing and screeding apparatus **10"**, rotation of rotatable screed head **212** (FIG. **21**) is accomplished via a rotational motor **208**, which is actuatable via of an hydraulic solenoid **240***m* and hydraulic fluid lines **211***a* and **211***b*, in a similar manner as discussed above with respect to FIG. **14**. Alternately, however, the hydraulic system of placing and screeding apparatus **200'** may control other elevation cylinders, pivot cylinders, leveling cylinders, and/or vibratory motors, depending on the specific screeding device implemented, without affecting the scope of the present invention. Because the screeding device is extendable and retractable relative to the hydraulic pump located on base unit **216**, the hydraulic lines required to raise, lower and/or rotate or pivot the screed head preferably comprise a plurality of hydraulic hoses coiled on at least one spring-biased hose reel (not shown) mounted at the base unit. Alternately, the hydraulic system could be mounted on the lead vehicle to eliminate the need for hose reels or the like. However, other means for providing actuation and control of the screeding device may be implemented, without affecting the scope of the present invention.

Although depicted and described above as being connected to an air cushion base unit **216**, air cushion lead unit **218** may otherwise be implemented with a wheeled base unit **216'**, as shown in placing and screeding apparatus **200"** in FIG. **23**, which is substantially similar to base unit **16** discussed above. Base unit **216'** is preferably a four-wheeled drive and four-wheel steered unit and includes an hydraulic pump which is operable to drive and steer the wheels and which is further operable to extend and retract the pipe assembly **214** in a similar manner as discussed above with respect to base unit **216** of placing apparatus **200**. As shown in FIG. **23**, air cushion lead unit **218** may be extended out over a region where concrete has already been placed to add more concrete to a particular region, or to further smooth and compact the uncured concrete, if a screeding device is implemented on apparatus **200"**, while avoiding contact and disturbance of the already placed concrete.

Swing Tractor

Referring now to FIGS. **24–28**, an alternate embodiment **300** of the present invention comprises a wheeled base unit **316**, a telescopic extendable tube assembly **314** and a movable support or lead unit **318**. Base unit **316** and tube

assembly **314** are substantially similar to the base units and tube assemblies discussed above with respect to placing apparatus **10** and placing apparatus **200**, respectively, such that a detailed description of these components need not be repeated herein. Lead unit **318** comprises a swing tractor, which is operable to support an outer end **314***b* of tube assembly **314** by freely rolling on wheels **320** as the tubes are extended outwardly from base unit **316**. Arcuate movement or rotation of tube assembly **314** relative to base unit **316** is accomplished by axial movement of the wheels **320** of lead unit **318** via a rotational motor **322** (FIGS. **27** and **28**).

As best shown in FIGS. **24** and **25**, lead unit **318** comprises a plurality of wheel trolleys **324** positioned about a circumferential edge **326***a* of an end frame or plate **326** of lead unit **318**. Each wheel trolley **324** comprises a wheel **320**, which is rotatably mounted on an axle **320***a*. The wheel trolleys **324** are defined by a pair of opposite side frame members **324***a* and a pair of opposite end frame members **324***b*, which generally surround their respective wheel **320**. Each axle **320***a* of wheels **320** is mounted at each end to trolley side frame members **324***a*, such that the wheels **320** are freely rotatable within their frames **324***a* and **324***b*. Each end plate **324***b* of trolleys **324** further comprise a pair of rollers **327** rotatably mounted thereto on axles **327***a* extending outwardly from end plates **324***b*.

Each end frame **326** of lead unit **318** has a generally U-shaped track or channel around its circumference, in order to provide a continuous, generally circular or oval-shaped track **326***b* extending around its circumference. Trolleys **324** are positioned between end frames **326**, such that rollers **327** of wheel trolleys **324** rotatably engage channel **326***b* at each end of wheel trolleys **324**. The wheel trolleys may thus travel around track or channel **326***b* in a direction which is generally axial relative to wheels **320**. Each of the wheel trolleys **324** is connected to a next, adjacent wheel trolley via a drive chain or linkage **329**, which is secured to each trolley **324** at each roller axle **327***a*. Preferably, each of a pair of chains **329** may be secured to rollers **327** on wheel trolleys **324** at an opposite end of wheel trolleys **324**, to provide uniform driving of the wheel trolleys at each end thereof, thereby substantially precluding binding of the wheel trolleys as they are moved along channel or track **326***b* of end frames **326**.

End frames **326** of lead unit **318** further comprise a pair of upwardly extending arms **326***d*. Each arm **326***d* is connected to a corresponding arm **326***d* on the opposite end frame **326** via a generally cylindrical bar or rod **336**. An outer tube **315***d* of tube assembly **314** preferably further includes a pair of laterally outwardly extending mounting arms or extensions **338** which extend from tube **315***d* and engage rods **336** on lead unit **318** for mounting the tube assembly **314** to lead unit **318**. Mounting arms may be clamped, welded or otherwise secured to tube **315***d*. Arms **338** preferably further comprise downward-extending mounting portions **338***a*, which are correspondingly formed to uniformly engage the generally cylindrical rods **336**, thereby substantially uniformly supporting tube assembly **314** on lead unit **318**.

Preferably, lead unit **318** is generally oval shaped and comprises a pair of gears or sprocket wheels **330** and **331** positioned substantially adjacent to each of the end plates **326** of lead unit **318**. Sprocket wheels **330** and **331** are each rotatably mounted on an axle **330***a* and **331***a*, respectively, each of which is secured at opposite ends to axle mounting brackets **326***c* of end frames **326**. Each of the sprocket wheels **330** and **331** comprises a plurality of gear teeth **330***b* and **331***b*, respectively, along their outer circumferential edges. Teeth **330***b* and **331***b* engage gaps **329***a* in chains **329**, as the chains, and thus the wheel trolleys, are routed and driven around sprockets **330** and **331**.

Preferably, at least one of the sprocket wheels **330** and **331** or axles **330***a* and **331***a* is rotatably driven by a rotational motor **322** (FIGS. **27**, **28** and **30**), which is positioned at one of the ends of at least one of the axles **330***a* and **331***a*. As shown in FIG. **27**, motor **322** may be mounted on axle **331**, while axle **330***a* and thus sprocket wheels **330** are freely rotatable relative to frame **326**. Accordingly, rotation of axle **331***a* by motor **322** causes rotation of sprocket wheels **331**, thereby causing movement of drive chains **329** about the respective sprocket wheels **331**, which further drives the rotation of the other sprocket wheels **330**. The movement of chains **329** further drives the wheel trolleys **324** around channel **326***b* of end frames **326**. As the wheel trolleys **324** are driven in a generally axial direction relative to axis **320***a*, wheels **320** function to sequentially engage the ground and pull the unit **318** laterally or sidewardly relative to tube assembly **314**, thereby moving tube assembly **314** arcuately with respect to base unit **316**. Preferably, rotational motor **322** is an hydraulic rotational motor and is interconnected to an hydraulic pump **328** on base unit **316** via a pair of hydraulic fluid lines **334***a* and **334***b* (FIG. **30**).

Because wheels **320** are not rotatably driven on lead unit **318**, extension and retraction of the tube assembly **314** is preferably provided via a plurality of hydraulic cylinders **343**, **345**, and **347**, similar to hydraulic cylinders **243**, **245**, and **247**, discussed above with respect to placing apparatus **200**. Preferably, the hydraulic cylinders **343**, **345**, and **347** are likewise plumbed in series, as discussed above with respect to hydraulic cylinders **243**, **245**, and **247**. However, other means for extending and retracting the tubes **315***a*, **315***b*, **315***c* and **315***d* relative to base unit **316** may be implemented without affecting the scope of the present invention.

As shown in FIGS. **24** and **26**, lead unit **318** may be implemented with a wheeled base unit **316**, which comprises four wheels **316***d* which are drivable and steerable via hydraulic pump **328**, motors **344** and hydraulic cylinders **356***a* and **356***b*, in a similar manner as placing apparatus **10**, discussed above. Likewise, a supply end **314***a* of pipe assembly **314** is preferably mounted to a trunnion **316***c* on a swivel portion **316***a*, which is rotatably mounted to a base portion or frame **316***b* of base unit **316**. As discussed above, swivel portion **316***a* may further include a crane device (not shown) for lifting and positioning the supply pipes and hoses (also not shown) for connection to or detachment from supply end **314***a* of pipe assembly **314**.

As shown in FIG. **28**, lead unit **318** may otherwise be implemented with an air cushion base unit **316'**, which is substantially identical to the base units of placing apparatus **200** and placing and screeding apparatus **200'**, discussed above. Similar to those units, base unit **316'** may comprise two or more fans and motors **317**, to provide proper lift for the air cushion device. An hydraulic motor (not shown) and a plurality of rollers **316***c'* (and other rollers not shown) are preferably included on base unit **316'**, to facilitate rotation of an upper portion **316***a'* relative to a lower portion **316***b'*, in a similar manner as discussed above with respect to placing apparatus **200**.

Additionally, lead unit **318** may be implemented with a screeding device **372** for smoothing and compacting the concrete as it is dispensed from dispensing end **314***b* of tube assembly **314**, as shown in FIG. **29**. Screeding device **372**

may be a conventional screeding device, a plow, auger and screeding device similar to the device disclosed in U.S. Pat. No. 4,930,935, referenced above and discussed with respect to screeding device **72**, the simplified screeding device **72'** with a vibratory plow, or a screeding device with a rotational head **314**, as shown in FIG. **29**, and as discussed above with respect to screeding device **104** of placing and screeding apparatus **10"**. However, other devices or means for smoothing and compacting uncured concrete as it is dispensed from the dispensing end **314***b* of the tube assembly **314** may be implemented, without affecting the scope of the present invention. It is further envisioned that a swing tractor unit may support only a screeding device for smoothing/grading uncured concrete that has already been placed at a targeted area of the support surface. The screeding device may be supported at the swing tractor, or may be supported by an extended or extendable support member extending from the swing tractor.

Referring now to FIG. **30**, an hydraulic schematic of the power source and motors and cylinders for a placing and screeding apparatus **300"**, as shown in FIG. **29** and discussed above. The drive system and motors **344** for the wheeled vehicle **316** are controlled via an hydraulic pump **328**, an hydraulic solenoid **340***a* and hydraulic fluid lines **339***a* and **339***b*, which are identical to the drive system and motors **44** discussed above with respect to placing device **10** and FIG. **5**. The steering cylinders **356***a* and **356***b* of base unit **316** are also operable via an hydraulic solenoid **340***b* and fluid lines **354***a* and **354***b*, in an identical manner as discussed above with respect to placing device **10** and FIG. **5**. Because wheeled unit **316** is implemented with a movable support which is not operable to extend and retract the tube assembly **314**, hydraulic motor **328** is further operable to actuate a solenoid **340***n* to pressurize hydraulic fluid lines **341***a* or **341***b* in order to extend and retract hydraulic cylinders **343**, **345**, and **347**, in the same manner as discussed above with respect to placing apparatus **200** and FIG. **20**.

Furthermore, because wheeled base unit **316** is implemented with the swing tractor lead unit **318**, hydraulic pump **328** is also operable to actuate an hydraulic solenoid **340***p* to provide pressurized fluid to one of hydraulic fluid lines **334***a* and **334***b*, in order to rotatably drive hydraulic motor **322** on lead unit **318**, thereby driving wheels **320** axially around sprockets **330** and **331**. Hydraulic fluid line **334***a* is connected to port **322***a* of motor **322** and may be pressurized to cause rotation of a motor shaft in one direction to drive the wheel trolleys **324** to pivot tube assembly **314** about base unit **316** in a first direction, while hydraulic fluid line **334***b* is connected to an opposite port **322***b* of motor **322** and may be pressurized to cause opposite rotation of wheel trolleys **324** and rotation of motor **322** and thus an opposite direction of movement of lead unit **318** and tube assembly **314**.

As shown in FIG. **29**, placing and screeding device **300"** may comprise a screeding device **372** with a rotating head **313**, which is driven by a motor **308** and raised and lowered by an elevation cylinder **306**. Accordingly, hydraulic motor **328** of base unit **316** is further operable to actuate an hydraulic solenoid **340***k*, which pressurizes an hydraulic line **304***a* or **304***b* to raise or lower the rotating head **313** via cylinder **306**. Preferably, raising and lowering of the rotatable head **313** is performed automatically in response to a signal received from a laser receiver **312** positioned at an upper end of screeding device **372**. However, the raising and lowering of the rotatable screeding head **313** may be performed manually, or in response from a signal from another type of leveling sensor or system, without affecting the scope of the present invention. Additionally, hydraulic motor **328** is operable to actuate a solenoid **340***m* for pressurizing hydraulic fluid lines **310***a* and **310***b* for rotatably driving hydraulic motor **308** and thus the rotatable screeding head **313** on screeding device **372**.

Because tube assembly **314** is extendable and retractable relative to base unit **316** while motors **322** and **308**, along with hydraulic cylinder **306**, are positioned toward a remote end of the tube assembly, hydraulic fluid lines **304***a*, **304***b*, **310***a*, **310***b*, **334***a* and **334***b* are preferably hydraulic fluid hoses which may be wound on multiple spring-biased hydraulic hose reels (not shown) to allow the hoses to unwind and thus extend outwardly with the tube assembly, and to wind back up or retract as the tube assembly is retracted.

Method for Placing Concrete

Referring now to FIGS. **31–34**, the process of placing concrete in a targeted area is shown with placing apparatus **10**. The base unit **16** is positioned such that dispensing nozzle **14***c* at outer end or dispensing end **14***b* of telescopic tube assembly **14** may reach the farthest corner of the targeted area. The lead vehicle is driven to a point where the tubes **14** are fully extended, and then turned and oriented in a direction generally normal to the longitudinal direction of the tube assembly **14**. The lead vehicle **18** is then driven arcuately back and forth along path **11***a* with respect to base vehicle **16** to place concrete within an area proximate to the dispensing end **14***b* of tube **14** while outer tube **15***d* is fully extended from lead unit **18**, as shown in FIG. **31**. Outer tube **15***d* may then be partially or fully retracted relative to lead unit **18**, while lead unit **18** again travels arcuately along substantially the same path **11***a*, to further place concrete in the region immediately adjacent to and radially inward from the first area, as shown in FIG. **32**. As lead unit **18** is driven back and forth, along generally the same arcuate path, outer tube **15***d* may be retracted approximately 2½ feet with each pass, such that the preferred 7 feet of extension is fully retracted after three passes of lead unit **18**.

Upon completion of the first region, the lead unit **18** is driven back toward base unit **16**, while still travelling along a generally arcuate path relative to the base unit, such that the tube assembly **14** is partially retracted, as shown in FIG. **33**. Preferably, the lead unit **18** is moved radially back toward base unit **16** approximately 7 feet, such that after lead unit **18** is moved radially inwardly toward base unit **16**, outer tube **15***d* may again be extended from tube **15***c* and lead unit **18** to position dispensing nozzle **14***c* proximate to the already placed concrete. Lead unit **18** may then be driven back and forth along a second path **11***b*, while outer tube **15***d* is partially retracted after each pass. The processes described with respect to FIGS. **31** and **32** may then be repeated for the next sections or regions of the targeted area, without any gaps or insufficient concrete being placed in or between any of the regions. This process is repeated until all of the tubes are completely retracted and concrete has been dispensed over the entire targeted area, as shown in FIG. **34**. The supply end **14***a* of tube assembly **14** may then be disconnected from the supply hose or tubes **20**, several sections of the supply pipe may be removed, and the base unit **16** may be repositioned and reconnected to the supply line. Upon reconnection, the telescoping tubes may be extended such that the lead unit is again ready to begin placing concrete at the next targeted area.

Because the extension and retraction of the tube assembly may be continuously adjusted while the tubes are traveling arcuately back and forth relative to the base unit, the

dispensing end of the tube assembly may provide concrete to every location in the targeted area, thereby uniformly distributing the concrete and substantially precluding the possibility of an insufficient amount of concrete being dispensed in any given area. Although described with pipes of a preferred length and movement of the lead unit a preferred distance, clearly the scope of the present invention includes other placing and/or screeding apparatus' which have different length pipes and/or are moved a different distance when in use. Also, although FIGS. **31–34** show the process for placing concrete with wheeled vehicles, the process is substantially similar if the lead unit is an air cushion device or a swing tractor and/or if the base unit is an air cushion device The telescopic tubes are then operable to radially extend and retract the tubes and air cushion or swing tractor support unit while the movable support unit and/or the base unit, whether it is an air cushion device or wheeled vehicle, are operable to move or to rotate or swivel to arcuately move the support unit and tube relative to the base unit.

Articulated Pipe Assembly

Referring now to FIGS. **35–48**, an alternate placing apparatus **400** comprises an articulated pipe or tube assembly **414**, a generally fixed or non-movable base unit **416**, and a plurality of movable air cushion supports or units **418**. As used herein, the term "articulated" describes a jointed or bendable tube or pipe assembly which folds or bends between a retracted position, where the joints are substantially angled or bent, and an extended position, where the tube assembly is substantially straight or linear. A supply end **414***a* of articulating tube assembly **414** is connected to a concrete supply tube **20** at base **416**. Tube assembly **414** comprises a plurality of pivotable pipe sections **415***b*, **415***c* and **415***d*, which are pivotable relative to a generally fixed supply end **414***a*, an inner or supply pipe section **415***a* and base **416**, such that movable supports **418** and a discharge end **414***b* of tube assembly **414** are movable relative to base **416** to place uncured concrete at substantially all locations within a targeted area in the vicinity of base **416**. Each pipe section **415***a*, **415***b*, **415***c* and **415***d* is connected to an adjacent section or sections via corresponding flexible hoses or tubes **415***e*, which bend or flex to allow pivotal movement between the pipe sections to define joints **431***a*, **431***b* and **431***c*. Additionally, a screeding device (not shown), such as the screeding devices discussed above with respect to placing and screeding apparatus **10'**, may be mounted at discharge end **414***b* of tube assembly **414** to grade and smooth the uncured concrete as it is placed at the support surface by discharge end **414***b*.

Movable supports **418** are generally similar to the movable air cushion units described above with respect to placing apparatus **200**, such that a detailed description will not be repeated herein. Suffice it to say that movable supports **418** comprise a pair of lift fans **418***a* and a body **418***b* which is movably supported by a cushion of air generated by the lift fans **418***a* between body **418***b* and the support surface. Each movable support **418** further includes a mounting trunnion **429** positioned at an upper surface **418***c* of the body **418***b* of movable supports **418**. Trunnions **429** include a pair of notches or grooves **429***a* (FIG. **39**) for pivotally receiving a pair of pins **425***d* of a mounting bracket **425** at each pipe section **415***b*, **415***c* and **415***d*, as discussed below. Movable supports **418** function to support each pipe section **415***b*, **415***c* and **415***d* remotely from the base unit **416** and allow the pipe sections to be movable relative to one another to move the discharge end **414***b* about a targeted area of the support surface, as discussed in detail below.

Movable support **418** further includes a lower seal **451** (FIGS. **40** and **41**), which extends around the lower circumference of each unit to at least partially restrict or contain the cushion of air beneath the movable support when the lift fans are activated. Lower skirt **451** may comprise a brush skirt seal, such as the brush skirt seal **219** of movable support **218**, discussed above, or may comprise an inflatable seal **451**. Inflatable seal **451** comprises a flexible bladder, wall or seal **452**, which comprises a rubber-like material, such as Polyurethane coated nylon fabric or the like. Flexible wall **452** extends around a lower circumference **418***d* of movable support **418** and defines an inflatable cavity **453** therebeneath (FIG. **41**). Preferably, flexible wall **452** is secured at an outer edge **452***a* to lower circumferential region **418***d* of body **418***b* of movable support **418**, while an inner edge **452***b* is secured along an inner ring **418***e* at a lower surface of body **418***b*. Flexible wall **452** may be secured at its respective locations via a plurality of fasteners **454**, such as bolts or screws, such as self tapping screws or the like. Flexible wall **452** is positioned circumferentially around the entire circumference of the lower portion of body **418***b*, such that inner edge **452***b* extends radially inwardly of at least a portion of the fans **418***a* of movable support **418**. Accordingly, when fans **418***a* are activated, air is blown through a passageway **455** of body **418***b* and into cavity **453**, such that a portion of the air from the fans functions to inflate seal **451**, while the remainder of the air from the fans raises and supports movable support **418** above the ground or support surface. Inflatable seal **451** at least partially contains the air beneath the movable support and thus assists in supporting movable support **418** as the support unit is moved over the corrugated decking or concrete at the support surface. Similar to the air cushion units of placing apparatus **200**, casters, wheels or rollers (not shown in FIGS. **35–42**) may be mounted on the frame of the air cushion units to ease manual movement of the units when the engines are shut down.

Because the seal **451** is flexible and rounded, as shown in FIG. **41**, seal **451** functions to glide over placed concrete, and substantially reduces or precludes pushing or plowing of any already placed uncured concrete and accumulating the concrete around the outer edge of the movable support as it is moved along the placed concrete of the support surface. When operable, fans **418***a* are capable of raising and supporting movable support **418**, such that there is a gap of approximately one and one-half to two inches between a lower surface **452***c* of inflatable seal **452** and the corrugated decking of the support surface or other support surface. Preferably, movable support **418** is operable to be raised and supported at least approximately one-half inch above any concrete which may be placed at the support surface. If rebar or other additional materials are placed above the corrugated decking, the air cushion support preferably also provides clearance over such materials. The movable support unit is, thus, capable of floating above the support surface and above any previously positioned rebar, or any already placed concrete, without damaging the preplaced concrete surface. Therefore, movable supports **418** may move over the support surface while placing and/or screeding the concrete at the targeted area of the support surface, without disrupting the concrete that has already been placed and/or screeded at that area.

Referring to FIG. **39**, each pipe section **415***b*, **415***c*, **415***d* of tube assembly **414** is pivotally mounted to trunnion **429** at upper surface **418***c* of each movable support **418**. A pivotable trunnion mount or bracket **425** is clamped to each pipe section **415***b*, **415***c* and **415***d* generally near a midpoint

thereof via a pair of clamps **425***a*. Clamps **425***a* are pivotally secured to the trunnion mount **425**, which defines an opening **425***c* therethrough generally adjacent to clamps **425***a*. Openings **425***c* are formed to be larger diameter than the diameter of the pipe sections **415***b*, **415***c* and **415***d*, such that the pipe sections are insertable through openings **425***c* and are pivotable therein. Because the pipe sections are secured to clamps **425***a*, which are pivotably secured to mount **425**, the pipe sections are pivotable with respect to mount **425**, and thus movable support **418**, about an axis **427***a* extending longitudinally along the respective pipe section. Trunnion mount **425** further includes a pair of oppositely extending generally cylindrical pins, axles or tubes **425***d*, which extend laterally outwardly from each side of trunnion mount **425**. Cylindrical pins **425***d* are insertable within a pair of grooves or channels **429***a* of trunnion **429** and are pivotable about an axis **427***b* defined by pins **425***d* of mount **425**. Accordingly, pipe sections **415***b*, **415***c* and **415***d* are pivotably mounted to each movable support **418**, such that the pipe sections are pivotable about a pair of axes **427***a* and **427***b*, which are generally perpendicular to one another. This allows the pipe sections to pivot relative to movable supports **418** to accommodate for changes in the height or orientation of the movable supports as they may encounter uneven areas at the support surface or ground.

Each pipe section **415***a*, **415***b*, **415***c* and **415***d* is connected at one or both ends to a hose section **415***e* (FIGS. **35**, **36** and **38**), such that a hose section is connected to the opposed ends of each adjacent set of pipe sections. Each hose section **415***e* is secured to the respective end of the pipe sections via a clamp **415***f* or any other known clamping means. Hose sections **415***e* are flexible and allow the adjacent pipe sections **415***a*, **415***b*, **415***c* and **415***d* to pivot with respect to one another, as shown in FIGS. **35** and **36**, and define respective joints **431***a*, **431***b* and **431***c*. As best shown in FIG. **38**, pipe sections **415***b*, **415***c* and **415***d* are pivotable relative to each other about a generally vertical axis **431** at each joint **431***a*, **431***b* and **431***c* via flexing or bending tube sections **415***e*, which are vertically supported by a pair of pivotable linkages or members **421** and **422**. Pivotable members **421** and **422** extend along each hose **415***e* and above and below each hose section **415***e* and are connected to the corresponding opposed ends of the adjacent pipe sections, such as **415***b* and **415***c*. Each joint **431***a*, **431***b*, and **431***c* is thus defined by a pair of upper pivotable members and a pair of lower members which are preferably substantially similar, such that only one set will be described in detail, with the other set being similarly mounted to placing apparatus **400**. The pivotable linkages **421** and **422** are secured to the opposed ends of the adjacent pipe sections by a mounting member **419** clamped to each pipe section **415***a*, **415***b*, **415***c* and/or **415***d*. Each mounting member **419** comprises a mounting bracket structure **419***a* for mounting a powered actuating or extending device, such as a pair of hydraulic cylinders **443**, **444**, which are cooperatively operable to cause pivotable movement of the pipe sections, as discussed below. As shown in FIG. **38**, the mounting bracket **419***a* may be positioned at an upper or lower end of each mounting member **419**. The mounting members **419** may then be reversibly mounted at the opposed ends of the adjacent pipe sections to allow one set of hydraulic cylinders to be mounted above the hose **415***e* and a second set of hydraulic cylinders to be mounted below the hose **415***e*.

As is best seen in FIG. **38**, each pivotable linkage **421**, **422** comprises a substantially rigid beam or member, and is pivotally interconnected with the other linkage to define the vertical axis **431** positioned generally in the vicinity of a midpoint of each flexible tube **415***e*. Opposite ends **421***c*, **422***c* of members **421**, **422** are fixedly secured to mounting members **419**, while connecting ends **421***a*, **422***a* are pivotally secured together. Preferably, connecting end **421***a* of pivotable linkage **421** may be inserted within a forked connecting end **422***a* of linkage **422** and pivotably secured thereto. Preferably, one or both of the upper and lower pivotable members **421** further include a gear member **424***a*, which is fixedly secured at end **421***a* of pivotable member **421**. Gear member **424***a* may be fixedly mounted to member **421** via insertion of the gear **424***a* within a slot or gap **421***b* of member **421**, and insertion of pins **424***c* through a plurality of openings **421***d* in gear **424***a*, in order to pin or otherwise secure gear **424***a* within slot **421***b*. However, gear **424***a* may be mounted to member **421** via any other known means, without affecting the scope of the present invention.

Gear member **424***a*, and thus member **421**, is rotatable relative to member **422** via the pair of hydraulic cylinders **443** and **444**. Each hydraulic cylinder **443**, **444** comprises a cylinder **443***a*, **444***a* and a rod end **443***b*, **444***b*, which is extendable and retractable relative to the respective cylinder via pressurized fluid, as discussed above with respect to hydraulic cylinder **32**. A flexible belt **424***b* or chain linkage or the like is routed around gear member **424***a* and connected at each end to rod end **443***b*, **444***b* of hydraulic cylinders **443** and **444**. Hydraulic cylinders **443***a* and **444***a* may be secured to mounting bracket **419***a* via engagement of a generally cylindrical mounting member **445** at an end of cylinders **443***a*, **444***a* with corresponding notches or recesses **419***d* formed in brackets **419***a* (FIG. **38**). Hydraulic cylinders **443** and **444** cooperatively extend and retract, such that as rod end **444***b* of cylinder **444** extends, rod end **443***b* of hydraulic cylinder **443** correspondingly retracts, and vice-versa. Because gear member **424***a* is fixedly secured to structural member **421**, while being pivotable relative to structural member **422**, pulling on belt or chain **424***b* by either hydraulic cylinder **443** or **444** results in pivotal movement of gear **424***a* relative to member **422**, which further results in pivoting of structural member **421** relative to member **422**, and thus pivoting of the adjacent pipe sections and movable supports relative to one another. As shown at joint **431***a* in FIG. **35**, both the upper and lower pair of pivotable linkages **421**, **422** may include a gear member **424***a* and hydraulic cylinders **443** and **444**, which cooperatively extend and retract to pivot pipe section **415***b* relative to pipe section **415***a*. The additional pair of hydraulic cylinders may be beneficial or necessary to generate enough pulling force at the belts or chains **424***b* to pivot all three movable air cushion supports **418** relative to fixed pipe section **415***a* and base unit **416** about the corresponding vertical axis **431** of joint **431***a*. As shown in FIG. **35**, two pair of hydraulic cylinders may be positioned between the base unit and first movable support at joint **431***a*, while only one set may be required to pivot or move the other movable supports relative to one another at the outer joints **431***b* and **431***c*.

Base unit **416** of placing apparatus **400** is preferably substantially fixed relative to the support surface and supply tube **20**. Base **416** preferably has two or more legs **416***a* which extend generally downwardly to support base **416** and supply end **414***a* of pipe section **415***a* of tube assembly **414** above the support surface. Preferably, legs **416***a* are adjustable, such as via a hand crank **416***b* or the like, such that the angle between the legs may be adjusted to correspondingly adjust the height at which base unit **416** supports the supply end **414***a* of tube assembly **414**. The hand crank **416***b* may be threaded and one of the legs **416***a* may be

correspondingly threaded, such that rotation of crank **416***b* pulls the legs toward each other or pushes them away in order to adjust the height of the base unit **416**.

Preferably, base **416** (FIGS. **35–37**) is fixedly positioned at the support surface, such that supply end **414***a* and supply pipe section **415***a* of tube assembly **414** are substantially immobilized by base unit **416**. Preferably, base unit **416** is secured via at least one restraining device **417***a* and/or **417***b* (FIGS. **35**, **36** and **42–48**). Preferably a pair of restraining devices **417***a* and **417***b* are mounted at supply pipe section **415***a* at or near opposite ends thereof. A base restraining device **417***a* includes a pair of cables **433***a* (FIGS. **36** and **42**) extending therefrom. The cables **433***a* may be extended and retracted via corresponding hand cranks **435***a* (FIG. **37**), such that the tension in the cables may be adjusted to substantially limit lateral movement of supply end **414***a* and thus secure base unit **416** in the selected position. As shown in FIG. **42**, cables **433***a* may be secured to a fixed structure, such as steel columns **409** or the like, at the support surface. Preferably, a second restraining device **417***b* is mounted at an outer end of supply section **415***a* of tube assembly **414** and provides a second pair of cables **433***b* which extend outwardly from opposite sides of restraining device **417***b*. The cables **433***b* may be adjusted and tightened via rotation of corresponding hand cranks **435***b* at restraining device **417***b* (FIG. **37**). By connecting cables **433***a* and **433***c* to fixed structures **409**, and then tightening each cable by the associated hand cranks, the cables may be tightened to substantially preclude movement of base **416** relative to the support surface. As shown in FIG. **42**, the cables may be secured to spaced apart structures, such that the pairs of cables extend in generally opposite longitudinal directions to further limit longitudinal movement of base **416** and supply pipe section **415***a*.

As shown in FIG. **37**, a base unit **416'** may alternately comprise a single leg **416***a*', which is adjustable relative to base **416'** and pipe section **415***a* via a hand crank **416***b*' or the like to adjust the height of supply end **414***a* of tube assembly **414**. Similar to base **416**, a rearward restraining device **417***a* of base **416'** is positioned at supply end **414***a* of tube **414**, while a second restraining device **417***b* is positioned at an opposite outer end of supply section **415***a* of tube assembly **414**. Preferably, the hand cranks **435***a* and **435***b* are common parts such that they may be reversibly mounted to each side of their respective restraining devices **417***a* and **417***b* at pipe section **415***a* and base **416** or **416'**, as shown in FIG. **37**.

Method for Placing Concrete

Referring now to FIGS. **42–48**, placing apparatus **400** may be implemented at an elevated surface **405** to place concrete at that surface. Because the movable air cushion supports **418** spread out the load of the units and pipe assembly, thereby reducing the pressure on the support surface, the air cushion supports may be implemented at a corrugated metal deck **407**, such as the type typically used in construction of elevated slabs, without damaging the corrugated decking **407**. The movable support units **418** move and support the tube assembly **414** over the deck as the placing apparatus dispenses and places concrete at a targeted area of the support surface **405**.

When placing apparatus **400** is set up at a targeted location, base unit **416** is first secured relative to the targeted support surface by tightly securing cables **433***a* and **433***b* to fixed structures, such as vertical columns **409** of the building or structure, to substantially fix base unit **416** and prevent movement thereof as movable units **418** are pivoted relative to one another and base unit **416**. As best shown in FIGS. **43–48**, base unit **416**, first restraining device **417***a* and second restraining device **417***b* are positioned relative to the columns **409** or other fixed structure such that cables **433***a* pull in one direction, while cables **433***b* pull in substantially the opposite direction, to prevent both lateral and longitudinal movement of pipe section **415***a* during placing of the concrete. The supply end **414***a* of fixed or supply pipe section **415***a* is connected to a supply pipe or hose **20**, which provides a supply of uncured concrete to placing apparatus **400**.

Initially, each joint **431***b* and **431***c* between the movable supports **418** may be substantially straight (FIG. **43**), to allow maximum extension of discharge end **414***b* from base unit **416** and joint **431***a*. Concrete may then be placed along a generally arcuate path of a first targeted area **405***a* via pivotable movement about the first joint **431***a* between fixed pipe section **415***a* and the first movable support **418**.

As shown in FIG. **44**, after the concrete has been placed along the first arcuate path, one or both of the joints **431***b* and **431***c* may be angled to effectively shorten the extension of discharge end **414***b* from base unit **416** and joint **431***a*. Joint **431***a* is again pivoted to move discharge end **414***b* along a closer arcuate path to place concrete at a next inward region of the targeted support surface **405***a*. As shown in FIGS. **45** and **46**, this process is repeated by further adjusting the angle between the respective movable units and pipe sections to further reduce the effective length of the tube assembly to shorten the distance of the discharge end **414***b* from base unit **416** and joint **431***a*. Joint **431***a* is again pivoted back and forth to again move discharge end **414***b* generally arcuately with respect to joint **431** a to place concrete at a next inwardly position targeted area. As shown in FIG. **46**, this process is repeated until joints **431***b* and **431***c* are pivoted to their maximum amount, whereby the first targeted area **405***a* of the support surface is substantially covered with the placed concrete.

As shown in FIG. **47**, the process may be continued at a next adjacent targeted area **405***b* by straightening out joints **431***b* and **431***c* to again extend discharge end **414***b* a maximum amount from inner joint **431***a* and base unit **416**. Joint **431***a* may again be pivoted to place concrete at an outermost portion of the second targeted area **405***b*. The process described above with respect to FIGS. **44** through **46** is repeated for the second targeted area **405***b* until the entire area has been covered by the uncured concrete, as shown in FIG. **48**. Cables **433***a* and **433***b* may then be loosened and then disconnected from the support structures. Supply end **414***a* of pipe assembly **414** may also be disconnected from supply line **20**, such that base unit **416** may be repositioned to a next targeted area of the support surface.

Although the process is described above as including the steps of pivoting the outer joints **431***b* and **431***c* to set an effective distance between the discharge end **414***b* and joint **431***a*, and then pivoting joint **431***a* to arcuately move discharge end **414***b* relative thereto, the angular adjustment of the three joints for **431***a*, **431***b*, and **431***c* may be continuously adjusted while the tubes are travelling arcuately back and forth relative to the base unit. The dispensing end of the tube assembly provides concrete to every location within the targeted area, thereby uniformly distributing the concrete and substantially precluding the possibility of an insufficient amount of concrete being dispensed in any part of the targeted area of the support surface. The hydraulic cylinders **443**, **444** of the apparatus may be remotely controllable or may be controlled via a programmable control to automatically move the movable supports and discharge end

of the tube through a programmed process, such as the process described above, without any manual intervention. The uncured concrete being placed by discharge end **414***b* may also be controlled by a valve (not shown) in pipe assembly **414**, such that the entire placing process may provide a uniform distribution of concrete throughout the entire targeted area with little or no manual intervention once the placing apparatus has been set up.

Flexible Tube Assembly

Referring now to FIG. **49**, an alternate placing apparatus **500** comprises a plurality of movable air cushion supports **518**, which movably support a pipe assembly **514**. Preferably, pipe assembly **514** is connected to a base unit (not shown), such as a base unit of the types discussed above, and provides uncured concrete to a support surface via a discharge end **514***b*. The movable air cushion supports **518** are substantially similar to those of placing apparatus **400**, discussed above, such that a detailed discussion will not be repeated herein. However, each air cushion support **518** includes a pair of winch systems **543***a* and **543***b* at at least one end of the support **518** and on generally laterally opposite sides of the air cushion support. The winch systems **543***a*, **543***b* include a spool or reel **545***a*, **545***b* and a cable **547***a*, **547***b*, respectively, and a powered winch or winding device (not shown), which is operable to extend and retract the respective cable, as discussed below. Air cushion supports **518** further include a spool or cleat **549***a*, **549***b* at an end opposite the winch systems **543***a*, **543***b* for securing an end of the cables **547***a*, **547***b* from the next adjacent support thereto.

Tube assembly **514** comprises a flexible hose or tube **515** and is secured along an upper surface **518***c* of each movable support **518**. The tube assembly **514** may comprise a single, long flexible tube or hose fixedly secured to upper surface **518***c* of each movable support **518** or may comprise multiple pipe sections **515***b*, **515***c* and **515***d* mounted to the upper surface **518***c* of a respective support **518** and interconnected with one another via a flexible tube or hose assembly **515***e*, similar to pipe assembly **414**, discussed above. The tube assembly **514** further includes a flexible beam member **513** which extends along tube assembly **514**, such as along an upper surface of the tubes **515***e*, as shown in FIG. **49**. Flexible beam **513** is flexible in the generally horizontal direction, such that the movable supports may move laterally or pivot relative to one another, yet is substantially rigid and resistant to flexing in a vertical direction. Preferably, the flexible beam is a ½"×12" beam comprising an ultra high molecular weight (UHMW) plastic, which provides flexibility in the horizontal plane, while providing substantial support or rigidity in the vertical plane. The tube assembly **514** thus vertically supports the tube or hose **515** and allows for pivotable movement of the movable supports **518** and discharge end **514***b* of tube assembly **514** relative to the other movable supports **518** and the base unit via generally horizontal flexing of the tube between each adjacent pair of movable supports.

Pivotable movement of the adjacent movable supports relative to one another preferably is accomplished via cooperative extension and retraction of cables **547***a* and **547***b* by winch systems **543***a* and **543***b*, respectively. Cables **547***a* and **547***b* extend from spools **545***a* and **545***b*, respectively, and are connected at opposite ends to cleats **549***a*, **549***b* at corresponding sides of the next adjacent movable support. Preferably, the cables **547***a*, **547***b* are wound about their respective spools **545***a*, **545***b*, which are rotatable via the winches to extend and retract the cables, **547***a* and **547***b*. The winches are cooperatively operable to extend one cable **547***a* while correspondingly retracting the other cable **547***b*, such that the operation of the winches causes pivotal movement of one movable support relative to another, as shown in FIG. **49**. Tube **515** flexes horizontally as one cable **547***b* pulls at a side of the movable support, while the other cable **547***a* is extended or unwound, thereby allowing the movable supports to pivot relative to one another.

Placing apparatus **500** is operable in substantially the same manner as placing apparatus **400** discussed above. The movable supports are pivoted relative to one another via extension and retraction of the connecting cables, while the tube assembly **514** and movable supports **518** are also pivoted relative to a base unit to place concrete throughout a targeted area of the support surface. Because the tube assembly of placing apparatus **500** includes a flexible hose or tube and flexible beam, and does not include the multiple pipe sections, gear members and brackets of placing apparatus **400**, placing apparatus **500** provides a lower cost and less complex means for placing concrete at the targeted area, while still providing the benefits of the air cushion supports. The flexible hose also provides a reduced mass of the placing apparatus.

Articulated Wheeled Placing Apparatus

Referring now to FIGS. **50–52**, a concrete placing apparatus **600** comprises a wheeled base unit **616**, a wheeled movable support **618** and an extendable and retractable pipe assembly **614** supported thereon. Pipe assembly **614** is supported at or near a discharge end **614***b* by movable support **618** and at a supply end **614***a* by the wheeled base unit **616**. Supply end **614***a* is connected to a connector pipe **613**, which is pivotally mounted to base unit **616** at a rotatable trunnion **629** of base unit **616**, as discussed below. The other end of the connector pipe **613** is connectable to a flexible supply hose or tube **620***b*, which is further connectable to the supply pipes and the pumping truck or concrete supply (not shown in FIGS. **50–52**). Additionally, the discharge end **614***b* of pipe assembly **614** is connected to a discharge tube assembly **650** which is bendable or movable relative to discharge end **614***b* to place concrete in an arcuate path with respect to discharge end **614***b* of pipe assembly **614**, as discussed below.

In the illustrated embodiment, pipe assembly **614** is a telescoping conduit, similar to pipe assembly **214**, discussed above, such that a detailed discussion will not be repeated herein. Briefly, pipe assembly **614** includes an inner pipe or tube **615***a* and an outer pipe or tube **615***b*, which slidably receives inner pipe **615** a therewithin as outer pipe **615***b* is extended and retracted relative to inner pipe **615***a*. Extension and retraction of pipe assembly **514** is preferably accomplished by an hydraulic cylinder **643**, similar to hydraulic cylinder **243**, discussed above with respect to placing apparatus **200**. Hydraulic cylinder **643** includes a cylinder portion **643***a* and an extendable and retractable piston rod portion **643***b*, which is extendable and retractable within and along cylinder **643***a* via pressurized hydraulic fluid. Cylinder portion **643***a* is mounted at an inner end **615***c* of outer pipe **615***b* via brackets **649**, while an outer end of piston or rod **643***b* is secured at an inner end **615***d* of inner pipe **615***a* via brackets **651**. Accordingly, extension and retraction of rod **643***b* relative to cylinder **643***a* causes a corresponding extension and retraction of outer pipe **615***b* relative to inner pipe **615***a*. Additionally, suitable seals (not shown) are assembled within tube assembly **614** to prevent concrete from leaking out of the tubing assembly as the sections **615***a* and **615***b* slide in and out relative to one another.

Pipe assembly **614** also includes an anti-twist or anti-rotation device **670** which functions to limit or substantially preclude rotation or twisting of one of the pipe sections **615***a*, **615***b* relative to the other about their longitudinal axes. Anti-twist device **670** includes an elongated member **672**, such as a hollow cylindrical pipe as shown in FIGS. **50** and **52**, which extends alongside and generally parallel to pipe sections **615***a*, **615***b*, an inner pipe section mounting bracket or collar **672***a* and an outer pipe section slidable support or collar **672***b*. Elongated member **672** is fixedly secured to inner pipe section **615***a* at an inner end of member **672** by bracket **672***a*, while collar **672***b* is mounted or secured to the inner end of outer pipe section **615***b* and slidably mounted or connected to elongated member **672**. Accordingly, as outer pipe section **615***b* is extended or retracted relative to inner pipe section **615***a*, collar **672***b* slides along member **672**, while the inner end of the member **672** remains secured at inner pipe section **615***a*. Because elongated member **672** extends at least partially along pipe sections **615***a*, **615***b* and is offset from their longitudinal axes, member **672** and brackets or collars **672***a*, **672***b* substantially preclude twisting or rotating of pipe sections **615***a*, **615***b* relative to one another as the base unit **616** and/or the movable support **618** maneuver over uneven support surfaces and the like.

Wheeled base unit **616** is an articulated wheeled vehicle which is movable along the support surface by wheels **624**. The articulated vehicle **616** includes a rear portion **616***a* and a front portion **616***b*, which are pivotable relative to one another about a generally vertical pivot or axis **616***c* (FIG. **51**). Each of the wheels **624** of the base unit **616** are hydraulically driven via independently operable hydraulic motors or the like (not shown), and the unit **616** is articulated for steering to minimized tire scrubbing on the deck surfaces while placing apparatus **600** travels over the support surface or deck. An actuator **617** (FIG. **51**), such as an hydraulic cylinder or hydraulic motor, is preferably provided at one of the front and rear portions and is operable to pivot front portion **616***b* relative to rear portion **616***a* about pivot axis **616***c*, such that the articulated vehicle pivots or bends at its middle region to turn the vehicle as the vehicle is moved along the support surface. Actuator **617** may be an hydraulic cylinder connected to a lever arm of one of the front and rear portions, **616***b* and **616***a*, respectively, such that extension or retraction of the cylinder creates a moment arm at the lever and thus causes pivotal movement of one or both portions **616***b*, **616***a* about the axis **616***c*. Turning of the vehicle **616** may also or otherwise be accomplished via independent driving of one or more of the wheels **624** relative to the others via the hydraulic motors at each wheel, without affecting the scope of the present invention.

Front portion **616***b* of articulated vehicle **616** includes a pipe assembly support **622**, which includes a lower column **623** and trunnion **629** at the upper end of column **623**. Trunnion **629** is pivotally mounted to support column **623** via a turntable bearing **629***a* (FIG. **51**) or the like, such that connector pipe **613** and pipe assembly **614** are pivotable about the generally vertical axis **616***c* at the center region of articulated vehicle **616**. A pair of mounting arms **626** support connector pipe **613** at a pair of mounting brackets or flanges **626***a* and are pivotally mounted to trunnion **629** via a pair of axles or pins **625**, such that mounting arms **626** are pivotable about a generally horizontal axis defined by pins **625** with respect to trunnion **629** and articulated vehicle **616**. Trunnion **629** extends upwardly a sufficient amount to provide clearance of mounting arms **626** and connecting pipe **613** over an upper portion of the articulated vehicle **616**, in order to avoid interference between the vehicle **616** and pipe assembly **614** as the pipe assembly **614** is pivoted about pivot axis **616***c* at turntable **629***a*.

The rear or base unit **616** is thus operable to support and carry or drag the flexible concrete supply line **620***b* as the placing apparatus **600** is moved throughout the targeted area. The trunnion **629** and turn table bearing **629***a* allow the wheeled vehicle or tractor to rotate nearly 360 degrees under the concrete delivery lines for maneuvering the base unit about the targeted area, and further allow the pipe assembly **614** to be pivoted about the generally vertical axis via movement of movable support **618**, as discussed below.

Movable support **618** includes a frame or cross member **632**, which supports a pipe mounting frame **634** thereon, and a pair of wheels **625**, one at each of the opposite sides of the cross member **632**. Pipe support frame **634** extends upwardly from cross member **632** and supports the outer end **614***b* of pipe assembly **614** via one or more collars or brackets **635** secured or clamped at a desired location along outer pipe **615***b*.

Movable support **618** further includes a pair of vertical wheel mounts **636**, which are pivotally or rotatably mounted at the lateral ends of cross member **632** and extend downwardly therefrom. Wheels **625** are rotatably mounted to the lower ends of wheel mounts **636** and are steerable via rotation of wheel mounts **636** relative to cross member **632**. Wheels **625** are preferably individually rotatably drivable via an hydraulic motor **636***b* (FIG. **50**) at the lower end of each vertical wheel mount **636**, such that the movable support **618** may be driven in the desired direction to move discharge end **614***b* of pipe assembly **614** in a generally arcuate path about articulated vehicle **616**. Additionally, movable support **618** may be movable via extension and retraction of pipe assembly **614** without operating hydraulic motors **636***b* by allowing wheels **625** to freely rotate as the pipe assembly is extended or retracted.

In the illustrated embodiment, rotation of vertical mounts **636** relative to cross member **632** is accomplished via a steering system **637**, which includes a double-ended hydraulic cylinder **638**, a chain or belt **639** and a pair of sprocket or gear members **636***a*, one mounted at the upper end of each of vertical wheel supports **636**. Hydraulic cylinder **638** is mounted to pipe support frame **634** and extends laterally outwardly therefrom. Hydraulic cylinder **638** includes a pair of piston rods **638***a* extending from opposite ends of a cylinder portion **638***b*. An outer end of each piston rod **638***a* is connected to one of the ends of chain or belt **639**, such that movement of the rod assembly **638***a* in either direction pulls the chain or belt **639** about the sprocket wheels **636***a*, thereby causing rotation of sprockets **636***a* with respect to cross member **632**, and thus turning of wheels **625** in either direction with respect to cross member **632**. Preferably, vertical wheel supports **636** extend downwardly from cross member **632** a sufficient amount to allow maximum turning of the wheels **625** with respect to cross member **632**, without interference between wheels **625** and cross member **632**. Accordingly, the degree of turning or pivoting of the wheel mounts **636** is dependent on the stroke of the hydraulic cylinder **638** and the size of the sprockets **636***a*, and is not limited by interference of the wheels **625** with the cross member **632** of movable support **618**. Although shown as a double-ended hydraulic cylinder, clearly other means for imparting rotation or pivoting of wheels **625** about a generally vertical axis with respect to cross member **632** may be implemented without affecting the scope of the present invention.

Concrete placing apparatus **600** further includes discharge tube assembly **650**, which is connected to the discharge end

614*b* of tube assembly **614** and is operable to further direct the concrete being placed at the support surface to a particular targeted location. Discharge tube assembly **650** includes a flexible tube portion **652** which is connected to discharge end **614***b* of tube assembly **614**, and an articulating support **654**, which supports flexible tube **652** and is bendable in either direction to flex or bend tube **652** such that a discharge outlet **652***a* of tube **652** is swept through an arcuate path relative to discharge end **614***b* of pipe assembly **614** for discharging concrete along the path.

Articulating support **654** is mounted at or secured to cross member **632** of movable support **618** and includes a mounting portion **656**, a mounting arm **658** extending from mounting portion **656** in a forwardly direction, and a pivoting or articulating support **660** which is pivotally mounted at an end of arm **658**. An actuator, such as hydraulic cylinder **662**, is mounted between mounting portion **656** and a bracket **660***a* extending laterally from support **660**. Bracket **660***a* provides a bell crank mounting arrangement for hydraulic cylinder **662**, such that extension or retraction of hydraulic cylinder **662** causes pivotal movement in either direction of support **660** about a generally vertical pivot axis at the forward end of mounting arm **658** for support **660**.

An outer end **660***b* of support **660** includes a pair of vertical supports **664** extending upwardly therefrom. Vertical supports **664** include multiple mounting openings **664***a* therein or therethrough, which receive one or more mounting pins **664***b*, for mounting and supporting the outer end **652***a* of flexible tube **652**, while the upper portions of the vertical supports **664** function to guide the tube **652** in either side to side direction as support **660** is pivoted via extension and retraction of hydraulic cylinder **662**. The multiple openings **664***a* of vertical supports **664** allow for vertical adjustment of the outer end of discharge tube **652**, via insertion of the mounting pin **664***b* in different openings along vertical supports **664**, in order to vertically adjust the angle at which the concrete is discharged from the tube. This allows the discharge end **652***a* to be raised so that the operator may use the pressure and momentum of the pumped concrete to shoot or discharge the concrete as it emerges from the nozzle or discharge end **652***a* a short distance into areas that cannot otherwise be fully reached by the placing apparatus **600**.

Preferably, placing apparatus **600** is easily disassembled and reassembled to ease transport of the various components to a targeted support surface, which may be at an elevated deck of a building or the like. Concrete placing apparatus **600** thus provides a maneuverable placing apparatus which may be easily disassembled and assembled for cleaning and for transporting and moving the apparatus between and at targeted support surfaces or decks. Preferably, the machine is designed such that the components fit into standard sized man lift elevators commonly found at construction sites, whereby the components may be individually moved to an upper or lower deck level and assembled for use at that deck level. Once assembled, the placing apparatus **600** is connectable to the concrete supply pump via hoses or tubes and is then operable to place the concrete at the targeted areas.

After assembly of placing apparatus **600** at a support surface, placing apparatus **600** is movable to a targeted location via driving and steering of articulated vehicle **616** and/or driving and steering of movable support **618**. When positioned at the targeted location of the support surface, flexible supply tube **620***b* is connected to supply end **613***b* of connector pipe **613** and further connected to the supply tubes or pipes (not shown). Hydraulic cylinder **643***a* may then be extended to extend pipe assembly **614** outwardly via free rolling or corresponding driving movement of movable support **618** along the support surface. Alternately, movable support **618** may be driven away from base unit **616** to pull outer pipe **615***b* outwardly along inner pipe **615***a* to move the discharge end **614***b* of pipe assembly **614** to its extended position. As concrete is placed at the support surface, wheels **625** may be turned and driven in a desired direction, to move discharge end **614***b* of pipe assembly **614** in a generally arcuate path about pivot axis **616***c* of base unit **616**. Discharge assembly **650** may also be actuated to sweep discharge end **652***a* of discharge tube **652** back and forth through a smaller, generally arcuate path about the discharge end **614***b* of pipe assembly **614**. Similar to the above discussed placing processes, pipe assembly **614** may be partially retracted after each pass or sweep of the discharge end **614***b* of the pipe assembly **614**, such that the next sweep of the pipe assembly **614** covers a different area of the support surface. After concrete has been placed at the entire targeted area, the supply pipes may be disconnected and the articulated vehicle and movable supports may be driven or otherwise moved to the next targeted location.

The hydraulic cylinders and hydraulic motors of placing apparatus **600** are preferably controlled via an open loop, closed center hydraulic system which is operable to control the hydraulic fluid motors and fluid cylinders on both the movable units **616** and **618** and on the pipe assembly **614** and discharge assembly **650**, similar to the hydraulic systems discussed above. Preferably, the hydraulic system and controls for placing apparatus **600** are remotely controllable, such that the apparatus can be driven and maneuvered from a remote location, or programmable to move the apparatus and dispense concrete in a programmed manner.

Although shown as having a discharge end of the tube assembly for discharging uncured concrete onto a targeted area of the support surface, the placing apparatus embodiments of the present invention may also or otherwise include a screeding device at an outer end of the apparatus to grade and smooth the uncured concrete on the support surface following discharge from the discharge outlet of the pipe assembly. The screeding devices may be of the type discussed above with respect to placing and screeding apparatus **10'** or placing and screeding apparatus **10"**, or other types of screeding devices, without affecting the scope of the present invention. The screeding device may be implemented with the discharge tube, such that the screeding device grades and smoothes the concrete following discharge from the discharge end of the tubes. Alternately, a screeding device alone may be positioned at an outer end of a support member, which does not place uncured concrete and is movable to move the screeding device relative to the support surface, such that the screeding device is operable to grade and smooth uncured concrete which was previously placed at the support surface.

Each of the embodiments of the base units discussed above may be implemented with any of the embodiments of the lead units or movable supports. It is envisioned that in certain applications, a particular design or combination may be preferred. For example, it would be preferable to implement an air cushion lead vehicle and possibly even an air cushion base in areas where at least a portion of the concrete has already been placed, or where loading requirements dictate a low ground pressure unit, such as on decks for elevated slabs, while different units may be preferred when the concrete is to be placed over dirt or sand, since the air cushion units may kick up a substantial amount of dirt and dust over such terrain.

It is further envisioned that the base and lead units of the present invention may be manually controlled, and may

even include an operator station for an operator to sit at and drive the vehicles while controlling the extension and retraction of at least one of the tubes. However, and preferably, at least the lead unit of each embodiment is remotely controllable via radio or electronic wire and may even comprise a programmable control which is operable to automatically move the lead unit and the tube assembly through the steps described above with respect to FIGS. **31–34** or FIGS. **43–48** without any manual intervention required. The programmable control may also be operable to open and close a valve in the tube assembly to place concrete only in the appropriate areas to provide a generally uniform distribution of uncured concrete over the entire targeted area. The only manual intervention then is to position the base unit at the desired location and connect the supply end of the tube assembly to the supply hoses, tubes, and/or pipes, which are connected to a pumping device.

Preferably, the base units of the present invention further include a radio receiver and control, which are operable to receive signals from a remote control transmitter used by an operator near the machine and to control the hydraulic drive motors, steering cylinders and other hydraulic cylinders and/or motors to maneuver the placing apparatus for placement of concrete at the support surface.

Therefore, the present invention provides a placing and/or screeding apparatus which is easily maneuverable and which may easily be implemented in areas where a boom truck cannot reach, such as remote areas of buildings or areas with low overhead clearance, or raised or elevated areas where weight or ground pressure may be a concern. The apparatus may include a conduit or tube or pipe assembly which is operable to provide uncured concrete to a discharge end of the conduit. The conduit or tube may be extendable and retractable to move the discharge end throughout the targeted area of the support surface. It is envisioned that the tube or pipe assembly may be extendable via a telescoping assembly, an articulated assembly, a flexible, bending assembly, an accordion type or corrugated conduit assembly, or any other means for extending and retracting a discharge end of the apparatus relative to a base or support, without affecting the scope of the present invention. The present invention may further include a screeding device at a dispensing end of the tube assembly to grade and/or smooth and/or compact the concrete as it is placed, thereby eliminating the additional step of setting up a separate screeding apparatus and screeding the concrete after it has been placed. Alternately, various embodiments of the movable units may include only a screeding device for grading, smoothing and/or compacting previously placed uncured concrete. The screeding device may be implemented with one ore more of the wheeled units, air cushion support units and/or swing tractor units, without affecting the scope of the present invention.

Additionally, the air cushion embodiments of the base and lead units facilitate movement of the apparatus over areas which are covered with uncured concrete, in order to place additional concrete and/or to smooth and compact the already placed concrete, without disturbing the uncured concrete which has already been placed and perhaps smoothed. The air cushion supports are especially useful in placing and/or screeding concrete in areas where a wheeled unit or other type of support may be too heavy or the support force too concentrated, such as on corrugated metal decking of elevated slabs. The air cushion supports spread the support force/weight of the supports and tube assembly and/or screeding device over a larger footprint to substantially reduce the ground pressure being applied at the support surface. One or more air cushion supports may be implemented with a concrete supply unit, such as a pipe or tube assembly, a hopper, or any other device which may provide/dispense concrete or other material at a targeted location, and/or a screeding device. The air cushion support (s) may be movable via movement of a tube assembly, such as extension/retraction and/or angular adjustment of the tube assembly, or may be movable via adjustment of an angle of one or more fan units, or pivotal movement of a base or other support, or any other means for moving the air cushion support generally horizontally over the support surface.

Changes and modifications in the specifically described embodiments can be carried out without departing from the principles of the invention, which is intended to be limited only by the scope of the appended claims, as interpreted according to the principles of patent law.

The embodiments of the invention in which an exclusive property right or privilege is claimed are defined as follows:

1. A concrete placing device for placing uncured concrete on a support surface, said concrete placing device comprising:

a base unit;

a conduit comprising a supply end and a discharge end, said discharge end comprising a discharge outlet and being opposite said supply end, said supply end being mounted to said base unit and connectable to a supply of uncured concrete to be placed on the support surface, said conduit being operable to dispense the uncured concrete to be placed via said discharge outlet; and

at least one movable support for movably supporting said discharge end of said conduit at a position remote from said base unit, said movable support being controllable substantially separately from said base unit to move said movable support and said discharge end of said conduit over the support surface at least while dispensing the uncured concrete at the support surface.

2. The concrete placing device of claim **1**, further comprising a screeding device at said discharge end of said conduit, said screeding device being operable to grade and smooth the uncured concrete at the support surface following discharge from said discharge outlet.

3. The concrete placing device of claim **2**, wherein said screeding device comprises a laser controlled leveling system.

4. The concrete placing device of claim **2**, wherein said screeding device comprises at least one of a plow, an auger, and a vibratory screed.

5. The concrete placing device of claim **4**, wherein said screeding device includes said plow, said auger and said vibratory screed, said plow, said auger and said vibratory screed being pivotally mounted to said screeding device, said screeding device further comprising at least one power source to pivotally adjust said plow and said vibratory screed with respect to the discharged uncured concrete.

6. The concrete placing device of claim **2**, wherein said screeding device comprises a vibratory screed.

7. The concrete placing device of claim **6**, wherein said screeding device further comprises at least one of a plow and an auger.

8. The concrete placing device of claim **2**, wherein said screeding device is operable via a power source positioned at one of said base unit and said movable support.

9. The concrete placing device of claim **8**, wherein said screeding device is operable via at least one hydraulic actuatable device, said at least one hydraulic actuatable device being connectable to said power source via at least one of a roll up hose and an extendable pipe.

10. The concrete placing device of claim 9, wherein said hydraulic actuatable device comprises at least one of a pair of hydraulic leveling cylinders, a pivotable hydraulic cylinder, and an hydraulic motor.

11. The concrete placing device of claim 2, wherein said screed comprises a rotating screed head, said discharge outlet being operable to discharge concrete within said rotating screed head.

12. The concrete placing device of claim 11, wherein said rotating screed head has a cylindrical opening therethrough, said discharge opening and said rotating screed head being operable to discharge the concrete into said cylindrical opening and smooth the concrete via rotation of said rotating screed head.

13. The concrete placing device of claim 1, wherein said movable support comprises a wheeled vehicle having at least two wheels.

14. The concrete placing device of claim 13, wherein said conduit is pivotally mounted to said movable support.

15. The concrete placing device of claim 13, wherein said movable support further comprises a power source, at least one of said wheels being driven by said at least one power source.

16. The concrete placing device of claim 13, wherein at least one of said wheels is steerable.

17. The concrete placing device of claim 13, wherein said conduit comprises an extendable tube which is extendable and retractable relative to at least one of said base unit and said movable support.

18. The concrete placing device of claim 17, wherein said extendable tube is telescopingly extendable.

19. The concrete placing device of claim 17, wherein said movable support further comprises a programmable control, said control being programmable to move said movable support radially and arcuately relative to said base unit in a programmed pattern.

20. The concrete placing device of claim 13, wherein said movable support comprises an operator control panel, said movable support being controllable by an operator at said movable support.

21. The concrete placing device of claim 13, wherein said movable support is remotely controllable.

22. The concrete placing device of claim 13, further comprising a screeding device positioned at said discharge end of said conduit.

23. The concrete placing device of claim 13, wherein said base unit is movable.

24. The concrete placing device of claim 23, wherein said base unit comprises a wheeled vehicle having at least two wheels.

25. The concrete placing device of claim 24, wherein at least one of said wheels of said base unit is drivable, and at least one of said wheels of said base unit is steerable.

26. The concrete placing device of claim 24, wherein said base unit comprises an articulated vehicle, a front portion of said articulated vehicle being movable relative to a rear portion of said articulated vehicle to at least one of steer said vehicle and pivot said conduit relative to said base unit.

27. The concrete placing device of claim 13, wherein said movable support includes a pair of wheels mounted generally beneath a cross member extending laterally across said movable support.

28. The concrete placing device of claim 27, wherein said movable support includes support members extending downward from opposite sides of said cross member, each of said wheels being mounted to a corresponding one of said support members.

29. The concrete placing device of claim 28, wherein said wheels are pivotable about respective axes defined by said support members, said wheels being positioned below said cross member to provide clearance between an uppermost portion of said wheels and said cross member.

30. The concrete placing device of claim 29, wherein said wheels are pivotable about said respective axes to be generally beneath said cross member.

31. The concrete placing device of claim 29, wherein each of said wheels are rotatably driven by a drive motor positioned at a respective one of said support members.

32. The concrete placing device of claim 31, wherein said wheels are steerable via pivotal movement of said wheels about said respective axes in response to an actuator positioned at said cross member.

33. The concrete placing device of claim 1, wherein said movable support is an air cushion device having at least one lifting fan which is operable to raise and support said movable support relative to the support surface via a cushion of air between said movable support and the support surface.

34. The concrete placing device of claim 33, wherein said conduit comprises an extendable tube which is extendable between an extended and retracted position relative to at least one of said base unit and said movable support.

35. The concrete placing device of claim 34, wherein said extendable tube is telescopingly extendable and retractable.

36. The concrete placing device of claim 35, wherein said telescoping tube is extendable and retractable in response to a powered extending device.

37. The concrete placing device of claim 36, wherein said base unit comprises a base portion and a swivel portion rotatably supported by said base portion, said extendable tube being mounted to said swivel portion such that said movable support is arcuately movable relative to said base unit via rotation of said swivel portion and radially movable relative to said base unit via extension and retraction of said telescopic tube.

38. The concrete placing device of claim 34, wherein said extendable tube is articulated about at least one joint and comprises at least two sections which are pivotable about said at least one joint relative to one another between the retracted position and the extended position.

39. The concrete placing device of claim 38, wherein said extendable tube is articulated via least one extending device positioned at said at least one joint.

40. The concrete placing device of claim 39, wherein said at least one extending device comprises a pair of hydraulic cylinders and said at least one joint comprises a gear member which is fixed relative to one of said at least two sections, said hydraulic cylinders being cooperatively operable to move a belt member about said gear member to pivot said at least two sections relative to one another.

41. The concrete placing device of claim 40, wherein said at least one movable support comprises at least two movable supports, each of said movable supports being connected via said extendable tube with a joint positioned between said movable supports to allow for pivotal movement of said each of said movable supports relative to one another.

42. The concrete placing device of claim 38, wherein said base unit is held stationary via at least one cable such that movement of said movable support is relative to said stationery base unit.

43. The concrete placing device of claim 34, wherein said extendable tube comprises a flexible hose and a flexible beam which is flexible in a horizontal direction while substantially limiting flexing in a vertical direction.

44. The concrete placing device of claim 43, wherein said movable support is movable via at least two cables which are

cooperatively extendable and retractable to pivot said movable support relative to said base unit.

45. The concrete placing device of claim **44**, wherein said at least one movable support comprises at least two movable supports interconnected via said at least two cables, said movable supports being movable relative to one another via extension of one of said cables and corresponding retraction of the other of said cables.

46. The concrete placing device of claim **33**, wherein said base unit is an air cushion device.

47. The concrete placing device of claim **46**, wherein said base unit comprises a base portion and a swivel portion rotatably supported by said base portion, said base unit further comprising a rotary motor which is operable to rotate said swivel portion relative to said base portion to move said conduit and said movable support arcuately relative to said base portion.

48. The concrete placing device of claim **47**, wherein said conduit comprises a telescopingly extendable tube which is extendable and retractable to move said discharge end of said extendable tube radially relative to said base unit.

49. The concrete placing device of claim **33**, further including a screeding device at said discharge end of said tube for grading and smoothing the uncured concrete that is placed on the support surface.

50. The concrete placing device of claim **33**, wherein said base unit is a wheeled vehicle.

51. The concrete placing device of claim **1**, wherein said movable support comprises a plurality of wheel trolleys which are connected to each other via a drive linkage, each of said wheel trolleys comprising a wheel which is rotatable on an axis, said wheel trolleys being rotatable about a closed path via a drive motor such that said trolleys are movable in a direction generally axially relative to said wheels.

52. The concrete placing device of claim **51**, wherein said movable support further comprises at least one sprocket wheel, said drive linkage engaging said sprocket wheel and said drive motor being operable to rotate said sprocket wheel such that said wheel trolleys are movable about a circumference of said sprocket wheel.

53. The concrete placing device of claim **51**, wherein said conduit comprises a telescopingly extendable tube and is connected to said movable support such that said extendable tube extends and retracts in a direction which is generally normal to said axes of said wheel trolleys.

54. The concrete placing device of claim **53**, wherein said drive motor is operable to rotate said wheel trolleys to move said discharge end of said extendable tube arcuately relative to said base unit.

55. The concrete placing device of claim **54**, wherein said drive motor is operable via a power source positioned at said base unit.

56. The concrete placing device of claim **55**, wherein said drive motor is hydraulically actuatable, said hydraulic drive motor being connectable to said power source via at least one of a roll up hose and an extendable tube.

57. The concrete placing device of claim **54**, wherein said wheels are freely rotatable about their respective axes of said wheel trolleys, said wheels rotating as said extendable tube telescopingly extends radially outwardly from said base unit.

58. The concrete placing device of claim **57**, wherein said extendable tube comprises at least one extending device mounted therealong for moving said discharge end of said extendable tube radially relative to said base unit.

59. The concrete placing device of claim **51**, wherein said base unit comprises one of a wheeled vehicle and an air cushion device, said tube being pivotable about a generally vertical axis at said base unit, said discharge end of said conduit being arcuately movable relative to said base unit.

60. The concrete placing device of claim **51**, further comprising a screeding device positioned at said discharge end of said conduit, said screeding device being operable to grade and smooth the uncured concrete at the support surface following discharge from said discharge outlet.

61. The concrete placing device of claim **1**, wherein said conduit comprises a telescopingly extendable tube and at least one extending device for extending and retracting said telescoping tube relative to said base unit.

62. The concrete placing device of claim **61**, wherein said telescoping tube comprises a first telescoping portion between said base unit and said movable support and a second telescoping portion between said movable support and said discharge outlet.

63. The concrete placing device of claim **61**, wherein said telescoping tube comprises at least three sections and said extending device comprises at least two hydraulic cylinders.

64. The concrete placing device of claim **63**, wherein said at least two hydraulic cylinders are interconnected via a plurality of hydraulic fluid lines such that said at least two hydraulic cylinders are operable via a single hydraulic supply at one of said hydraulic cylinders positioned adjacent to said base unit.

65. The concrete placing device of claim **61**, wherein said base unit is pivotable, said tube being movable arcuately with respect to said base unit.

66. The concrete placing device of claim **1**, wherein said conduit comprises an articulated tube having at least two sections pivotable relative to one another about at least one vertical axis at at least one joint of said articulated tube.

67. The concrete placing device of claim **66**, wherein said joint includes a flexible hose connected at each end to one of said at least two sections of said articulated tube, said flexible hose being flexible to allow for pivotal movement of said at least two sections relative to one another.

68. The concrete placing device of claim **67**, wherein said articulated tube includes an extending device positioned at said at least one joint, said extending device being operable to adjust an angle between said at least two sections in order to extend and retract said discharge end of said articulated tube relative to said supply end and said base unit.

69. The concrete placing device of claim **68**, wherein said at least one joint comprises first and second pivotable members and at least one gear member fixedly mounted at said first pivotable member, said gear member being rotatable relative to said second pivotable member to adjust the angle between said at least two sections.

70. The concrete placing device of claim **69**, wherein said extending device comprises at least one hydraulic cylinder mounted at said second pivotable member, said hydraulic cylinder being operable to rotate said gear member relative to said second pivotable member to adjust the angle between said sections.

71. The concrete placing device of claim **1**, wherein said conduit comprises a flexible hose and a flexible beam which supports said flexible hose and is flexible in a horizontal direction and substantially limits flexing in a vertical direction, said conduit allowing for pivotal movement of said movable support relative to said base unit via horizontal flexing of said flexible hose and said flexible beam.

72. The concrete placing device of claim **71**, wherein said conduit further comprises an extending device which is operable to extend and retract said at least one movable support relative to said base unit via flexing of said conduit.

73. The concrete placing device of claim **72**, wherein said extending device comprises at least two cables interconnected between said base unit and said movable support, said cables being cooperatively extendable and retractable to flex said conduit to cause movement of said movable support relative to said base unit.

74. The concrete placing device of claim **1**, wherein at least one of said base unit, said conduit and said movable support is remotely controllable.

75. The concrete placing device of claim **1** further comprising a programmable control, said at least one of said base unit, said conduit and said movable support being controlled via said programmable control to move said movable support in a programmed pattern relative to said base unit.

76. The concrete placing device of claim **1**, wherein said base unit further comprises a crane member for lifting and moving a supply tube when said base unit is to be connected or disconnected from the supply of uncured concrete of the supply tube.

77. A concrete placing device for placing uncured concrete on a support surface, said concrete placing device comprising:

a base unit;

a conduit comprising a supply end and a discharge end, said discharge end comprising a discharge outlet and being opposite said supply end, said supply end being mounted to said base unit and connectable to a supply of uncured concrete to be placed on the support surface, said conduit being operable to dispense the uncured concrete to be placed via said discharge outlet; and

at least one movable support for movably supporting said discharge end of said conduit at a position remote from said base unit, said movable support being an air cushion device having at least one lifting fan which is operable to raise and support said movable support relative to the support surface via a cushion of air between said movable support and the support surface, wherein said lifting fan is pivotable about an axis to move said movable support horizontally along the ground.

78. A concrete placing device for placing uncured concrete on a support surface, said concrete placing device comprising:

a base unit;

a conduit comprising a supply end and a discharge end, said discharge end comprising a discharge outlet and being opposite said supply end, said supply end being mounted to said base unit and connectable to a supply of uncured concrete to be placed on the support surface, said conduit being operable to dispense the uncured concrete to be placed via said discharge outlet; and

at least one movable support for movably supporting said discharge end of said conduit at a position remote from said base unit, said movable support being an air cushion device having at least one lifting fan which is operable to raise and support said movable support relative to the support surface via a cushion of air between said movable support and the support surface, wherein said movable support further comprises a swing fan which is pivotable about a generally vertical axis at said movable support and is operable to move said movable support along the support surface relative to said base unit.

79. The concrete placing device of claim **78**, wherein said movable support is remotely controllable.

80. A concrete placing and screeding apparatus for placing uncured concrete on a support surface and/or grading or leveling uncured concrete, said concrete placing and screeding apparatus comprising:

a movable support;

a conduit having a supply end and a discharge end, said supply end being opposite said discharge end, said supply end being connectable to a supply of uncured concrete to be placed, said conduit being supported by said movable support, said movable support being controllable to move said movable support and said discharge end of said conduit relative to said supply end of said conduit at least while discharging uncured concrete at the support surface; and

a screeding device at said discharge end of said conduit, said screeding device being operable to grade and smooth uncured concrete on the support surface following discharge from said discharge end of said conduit.

81. The concrete placing and screeding apparatus of claim **80**, wherein said screeding device comprises a rotatable screed head, said discharge end being positioned to discharge concrete within said rotating screed head.

82. The concrete placing and screeding apparatus of claim **81**, wherein said rotating screed head has a cylindrical opening therethrough, said discharge opening and said rotating screed head being operable to discharge the concrete into said cylindrical opening and smooth the concrete via rotation of said rotating screed head.

83. The concrete placing and screeding apparatus of claim **80**, wherein said screeding device comprises a vibratory screed.

84. The concrete placing and screeding apparatus of claim **83**, where said screeding device further comprises at least one of a plow and an auger.

85. The concrete placing and screeding apparatus of claim **84**, wherein said plow, said auger and said vibratory screed are pivotally mounted to said screeding device, said screeding device further comprising at least one power source to pivotally adjust said plow and said vibratory screed with respect to the uncured concrete.

86. The concrete placing and screeding apparatus of claim **80**, wherein said screeding device comprises a laser controlled leveling system.

87. The concrete placing and screeding apparatus of claim **80**, wherein said screeding device is operable via an hydraulic pump positioned remotely from said screeding device, said screeding device being connectable to said power source via at least one of a roll up hose and an extendable tube.

88. The concrete placing and screeding apparatus of claim **80** further comprising a base unit, said conduit being supported at said supply end by said base unit.

89. The concrete placing and screeding apparatus of claim **88**, wherein said base unit is rotatable, said supply end of said conduit being mounted to said base unit whereby said discharge end is movable arcuately relative to said base unit in response to at least one of rotation of at least a portion of said base unit and movement of said movable support.

90. The concrete placing and screeding apparatus of claim **89**, wherein said conduit comprises an extendable tube.

91. The concrete placing and screeding apparatus of claim **90**, wherein said extendable tube comprises a telescoping tube, said discharge end of said conduit being movable radially relative to said base unit via extension or retraction of said telescoping tube.

92. The concrete placing and screeding apparatus of claim **90**, wherein said extendable tube comprises an articulated tube having at least two sections which are pivotable relative to one another.

93. The concrete placing and screeding apparatus of claim **89**, wherein said base unit comprises one of a wheeled vehicle and an air cushion apparatus.

94. The concrete placing and screeding apparatus of claim **93**, wherein said base unit comprises a rotary motor which is operable to rotate a portion of said base unit whereby said discharge end of said conduit is movable arcuately relative to said base unit.

95. The concrete placing and screeding apparatus of claim **88**, wherein said base unit comprises an articulated wheeled vehicle.

96. The concrete placing and screeding apparatus of claim **80**, wherein said movable support is a wheeled vehicle.

97. The concrete placing and screeding apparatus of claim **96**, wherein said movable support includes a pair of wheels mounted generally beneath a cross member extending laterally across said movable support.

98. The concrete placing and screeding apparatus of claim **97**, wherein said movable support includes support members extending downward from opposite sides of said cross member, each of said wheels being mounted to a corresponding one of said support members.

99. The concrete placing and screeding apparatus of claim **98**, wherein said wheels are pivotable about respective axes defined by said support members, said wheels being positioned below said cross member to provide clearance between an uppermost portion of said wheels and said cross member.

100. The concrete placing and screeding apparatus of claim **99**, wherein said wheels are pivotable about said respective axes to be generally beneath said cross member.

101. The concrete placing and screeding apparatus of claim **99**, wherein each of said wheels are rotatably driven by a drive motor positioned at a respective one of said support members.

102. The concrete placing and screeding apparatus of claim **101**, wherein said wheels are steerable via pivotal movement of said wheels about said respective axes in response to an actuator positioned at said cross member.

103. The concrete placing and screeding apparatus of claim **80**, wherein said movable support is an air cushion device having at least one lift fan which is operable to support said air cushion device at the support surface via a cushion of air between said air cushion device and the support surface.

104. The concrete placing and screeding apparatus of claim **80**, wherein said movable support comprises a plurality of wheel trolleys which are connected to one another via a drive member, each of said wheel trolleys comprising a wheel which is rotatable on an axis, said wheel trolleys being rotatable about a closed path via a drive motor such that said trolleys are movable in a direction generally axially relative to said wheels, said conduit being mounted to said movable support such that said conduit extends longitudinally generally normal to said axes.

105. A concrete placing apparatus for placing uncured concrete on a support surface, said placing apparatus comprising:

a swivel base comprising a swivel portion and a base portion for rotatably supporting said swivel portion at least one of above and on the support surface;

an extendable conduit assembly comprising a supply end and a discharge end, said supply end being connectable at said swivel base to a supply of uncured concrete to be placed, said supply end being generally opposite to said discharge end, said discharge end being adapted to dispense the uncured concrete on the support surface; and

a movable support for supporting said extendable conduit assembly on the support surface remote from said swivel base, said movable support being movable substantially arcuately along the support surface relative to said swivel base via swiveling of said swivel portion relative to said base portion, said movable support being movable arcuately while said discharge end dispenses the uncured concrete on the support surface.

106. The concrete placing apparatus of claim **105** further comprising a screeding device positioned at said discharge end of said extendable conduit assembly, said screeding device being operable to grade and smooth the uncured concrete on the support surface following discharge from said discharge end of said extendable conduit.

107. The concrete placing apparatus of claim **106**, wherein said screeding device comprises a vibratory screed.

108. The concrete placing apparatus of claim **107**, wherein said screeding device further comprises at least one of a plow and an auger.

109. The concrete placing apparatus of claim **108**, wherein said plow, said auger and said vibratory screed are pivotally mounted to said screeding device, said screeding device further comprising at least one power source to pivotally adjust said plow and said vibratory screed with respect to the uncured concrete.

110. The concrete placing apparatus of claim **106**, wherein said screeding apparatus comprises a rotatable screed head, said discharge end of said extendable conduit assembly being positioned to discharge concrete within said rotatable screed head.

111. The concrete placing apparatus of claim **110**, wherein said rotating screed head has a cylindrical opening therethrough, said discharge end and said rotating screed head being operable to discharge the concrete into said cylindrical opening and smooth the concrete via rotation of said rotating screed head.

112. The concrete placing apparatus of claim **105**, wherein one of said movable support and said swivel base is operable to move said discharge end of said extendable conduit assembly at least one of arcuately and radially relative to said swivel base.

113. The concrete placing apparatus of claim **105**, wherein said extendable conduit assembly further comprises at least one extending device positioned therealong which is operable to extend and retract said conduit assembly to move said discharge end radially relative to said swivel base.

114. The concrete placing apparatus of claim **113**, wherein one of said swivel base and said movable support is operable to move said discharge end arcuately relative to said swivel base.

115. The concrete placing apparatus of claim **105**, wherein said movable support comprises a wheeled vehicle.

116. The concrete placing apparatus of claim **105**, wherein said movable support comprises a plurality of wheel trolleys which are connected via a drive member, each of said wheel trolleys comprising a wheel which is rotatable on an axis, said wheel trolleys being rotatable about a closed path via a drive motor being operable to drive at least one sprocket wheel, said drive member engaging said sprocket wheel such that said trolleys are movable in a direction generally axially relative to said wheels.

117. The concrete placing apparatus of claim **116**, wherein said extendable conduit assembly is connected to said movable support such that said extendable conduit assembly extends generally normal to said axes of said wheel trolleys.

118. The concrete placing apparatus of claim **117**, wherein said drive motor and said sprocket wheel are operable to

move said discharge end of said conduit assembly arcuately relative to said swivel base.

119. The concrete placing apparatus of claim **105**, wherein said movable support comprises an air cushion apparatus having at least one lift fan which is operable to support said movable support above the ground via a cushion of air between said movable support and the support surface.

120. The concrete placing apparatus of claim **119**, wherein said movable support is operable to move said movable support along the support surface whereby said discharge end is movable at least one of radially and arcuately relative to said swivel base.

121. The concrete placing apparatus of claim **105**, wherein said swivel base comprises one of a wheeled vehicle and an air cushion device.

122. The concrete placing apparatus of claim **105**, wherein at least one of said movable support, said swivel base, and said extendable conduit assembly is remotely controlled via a control.

123. The concrete placing apparatus of claim **122**, wherein said control is operable to control said at least one of said movable support, said swivel base, and said extendable conduit assembly via at least one of an electronic wiring and a wireless signal.

124. The concrete placing apparatus of claim **105**, wherein at least one of said movable support, said swivel base and said extendable conduit assembly is controllable via a programmable control, said at least one of said movable support, and said extendable conduit assembly being movable in a programmed pattern in response to said programmable control.

125. The concrete placing apparatus of claim **105**, wherein said extendable conduit comprises a longitudinally telescopingly extendable and retractable tube assembly.

126. A concrete placing apparatus for placing uncured concrete on a support surface, said placing apparatus comprising:

a swivel base comprising a swivel portion and a base portion for rotatably supporting said swivel portion at least one of above and on the support surface;

an extendable conduit assembly comprising a supply end and a discharge end, said supply end being connectable at said swivel base to a supply of uncured concrete to be placed, said supply end being generally opposite to said discharge end, said discharge end being adapted to dispense the uncured concrete on the support surface; and

a movable support for supporting said extendable conduit assembly on the support surface remote from said swivel base, said movable support comprising an air cushion apparatus having at least one lift fan which is operable to support said movable support above the ground via a cushion of air between said movable support and the support surface, wherein said movable support further comprises a directional fan which is operable to move said discharge end of said extendable conduit assembly at least one of radially and arcuately relative to said swivel base.

127. A concrete processing apparatus for placing and/or screeding uncured concrete at a support surface, said apparatus comprising:

at least one of a concrete supply unit for providing uncured concrete to the support surface and a screeding device for grading and smoothing uncured concrete on the support surface; and

an air cushion support unit which is operable to substantially continuously generate air flow which defines a cushion of air between said air cushion support unit and the support surface to movably support said at least one of said concrete supply unit and said screeding device above the support surface.

128. The concrete processing apparatus of claim **127**, wherein said concrete supply unit comprises a conduit having a supply end for receiving uncured concrete and a discharge end for discharging the uncured concrete on the support surface.

129. The concrete processing apparatus of claim **128** further comprising a base unit, said supply end of said conduit being supported at said base unit.

130. The concrete processing apparatus of claim **129**, wherein said base unit comprises one of a wheeled vehicle, an air cushion unit and a stationary support.

131. The concrete processing apparatus of claim **129**, wherein said conduit comprises an extendable tube which is extendable between an extended and retracted position relative to at least one of said base unit and said movable support.

132. The concrete processing apparatus of claim **131**, wherein said extendable tube is telescopingly extendable and retractable.

133. The concrete processing apparatus of claim **132**, wherein said base unit comprises a base portion and a swivel portion rotatably supported by said base portion, said extendable tube being movable arcuately relative to said base unit in response to one of rotation of said swivel portion and movement of said air cushion support.

134. The concrete processing apparatus of claim **131**, wherein said extendable tube and said support unit are at least one of arcuately movable and radially movable relative to said base unit.

135. The concrete processing apparatus of claim **131**, wherein said extendable tube is articulated about at least one joint and comprises at least two sections which are pivotable about said at least one joint relative to one another between the retracted position and the extended position.

136. The concrete processing apparatus of claim **131**, wherein said extendable tube comprises a flexible hose and a flexible beam which supports said flexible hose and is flexible in a horizontal direction while substantially limiting flexing in a vertical direction.

137. The concrete processing apparatus of claim **127**, wherein said concrete processing apparatus includes said screeding device, said screeding device comprising a vibratory screed.

138. The concrete processing apparatus of claim **137**, wherein said screeding device further comprises at least one of a plow and an auger.

139. The concrete processing apparatus of claim **127**, wherein said screeding device comprises a rotating screed head.

140. The concrete processing apparatus of claim **139**, wherein said concrete processing apparatus comprises said concrete supply unit and said screeding device, said rotating screed head having a cylindrical opening therethrough, said concrete supply unit and said rotating screed head being operable to discharge the uncured concrete into said cylindrical opening and smooth the concrete via rotation of said rotating screed head.

141. The concrete processing apparatus of claim **127**, wherein said concrete processing apparatus comprises said concrete supply unit and said screeding device.

142. The concrete processing apparatus of claim **141**, wherein said supply unit comprises a conduit having a supply end and a discharge end, said supply end being

connectable to a supply of uncured concrete, said screeding device being positioned at said discharge end to grade and smooth the uncured concrete being discharged therefrom.

143. A concrete processing apparatus for placing and/or screeding uncured concrete at a support surface, said apparatus comprising:

at least one of a concrete supply unit for providing uncured concrete to the support surface and a screeding device for grading and smoothing the uncured concrete on the support surface, said concrete supply unit comprising a conduit having a supply end for receiving uncured concrete and a discharge end for discharging the uncured concrete on the support surface, said conduit comprising an extendable tube which is extendable between an extended and retracted position relative to at least one of said base unit and said movable support, said extendable tube being articulated about at least one joint and comprising at least two sections which are pivotable about said at least one joint relative to one another between the retracted position and the extended position;

a base unit, said supply end of said conduit being supported at said base unit; and

an air cushion support unit which is operable to support said at least one of said concrete supply unit and said screeding device, wherein said at least one air cushion support unit comprises at least two air cushion support units, each of said air cushion support units being connected via said extendable tube with a joint positioned between said movable air cushion support units to allow for pivotal movement of said each of said air cushion support units relative to one another.

144. The concrete processing apparatus of claim **143**, wherein said base unit and said supply end of said conduit are substantially fixed relative to the support surface.

145. A concrete processing apparatus for placing and/or screeding uncured concrete at a support surface, said apparatus comprising:

at least one of a concrete supply unit for providing uncured concrete to the support surface and a screeding device for grading and smoothing the uncured concrete on the support surface, said concrete supply unit comprising a conduit having a supply end for receiving uncured concrete and a discharge end for discharging the uncured concrete on the support surface, said conduit comprising an extendable tube which is extendable between an extended and retracted position relative to at least one of said base unit and said movable support;

a base unit, said supply end of said conduit being supported at said base unit; and

an air cushion support unit which is operable to support said at least one of said concrete supply unit and said screeding device, wherein said extendable tube is mounted to said air cushion support unit via a trunnion at said air cushion support unit which allows for pivotal movement of said extendable tube about a first axis which is transverse to said extendable tube and about a second axis extending longitudinally along said extendable tube.

146. A concrete placing apparatus for placing uncured concrete at a support surface, said concrete placing apparatus comprising:

an extendable conduit having a supply end and a discharge end, said supply end being operable to receive a supply of uncured concrete, said discharge end being operable to discharge uncured concrete to the support surface, said extendable conduit having at least two sections pivotable about a generally vertical axis relative to one another;

at least one air cushion support unit which is operable to substantially continuously generate a cushion of air beneath said support unit to movably support said support unit and said extendable conduit over the support surface on said cushion of air; and

a base unit which is operable to support said supply end of said extendable conduit.

147. The concrete placing apparatus of claim **146**, wherein said base unit is substantially fixed relative to the support surface.

148. The concrete placing apparatus of claim **147**, wherein said base unit is securable via at least one cable connecting said base unit to a stationary member.

149. The concrete placing apparatus of claim **148**, wherein said base is securable via at least two cables connecting said base unit to at least two stationary members, said cables being adjustable to tighten said cables to secure said base unit to the stationary members.

150. The concrete placing apparatus of claim **146**, wherein said extendable conduit is an articulated tube, said at least two sections being pivotable relative to one another about at least one joint.

151. The concrete placing apparatus of claim **150**, wherein said at least two sections are pivotable via at least one extending device which extends and retracts to pivot said sections relative to one another.

152. The concrete placing apparatus of claim **151**, wherein said at least one extending device comprises two extending devices along laterally opposite sides of said articulated tube, said extending devices being operable to cooperatively extend and retract to pivot one of said sections relative to the other.

153. The concrete placing apparatus of claim **146**, wherein said at least two sections comprises at least three sections and said at least one air cushion support comprises at least two air cushion supports, each of said air cushion supports supporting one of said at least two sections of said extendable conduit.

154. The concrete placing apparatus of claim **146**, wherein said extendable conduit comprises a flexible tube and a flexible beam which supports said flexible tube and is flexible in a generally horizontal direction, said flexible beam limiting flexing in a vertical direction.

155. The concrete placing apparatus of claim **146** further comprising a screeding device positioned at said discharge end of said extendable conduit, said screeding device being operable to grade and smooth the uncured concrete on the support surface following discharge from said discharge end of said extendable conduit.

156. A concrete placing apparatus for placing uncured concrete at a support surface, said concrete placing apparatus comprising:

an extendable conduit having a supply end and a discharge end, said supply end being operable to receive a supply of uncured concrete, said discharge end being operable to discharge uncured concrete to the support surface, said extendable conduit having at least two sections pivotable about a generally vertical axis relative to one another;

at least one air cushion support unit which is operable to support said extendable conduit; and

a base unit which is operable to support said supply end of said extendable conduit, wherein said at least one air cushion support includes a pair of cables connected between said air cushion support and one of said base unit and another air cushion support, said cables being cooperatively extendable and retractable to pivot said at

least one air cushion support relative to said at least one of said base unit and said other air cushion support.

157. A concrete placing apparatus for placing uncured concrete at a support surface, said concrete placing apparatus comprising:

an extendable conduit having a supply end and a discharge end, said supply end being operable to receive a supply of uncured concrete, said discharge end being operable to discharge uncured concrete to the support surface, said extendable conduit having at least two sections pivotable about a generally vertical axis relative to one another;

at least one air cushion support unit which is operable to support said extendable conduit; and

a base unit which is operable to support said supply end of said extendable conduit, wherein said extendable conduit is mounted to said air cushion support unit via a trunnion at said air cushion support unit which allows for pivotal movement of said extendable conduit about a first axis which is transverse to said extendable conduit and about a second axis extending longitudinally along said extendable conduit.

158. A concrete placing apparatus for placing uncured concrete at a support surface, said concrete placing apparatus comprising:

an extendable conduit having a supply end and a discharge end, said supply end being operable to receive a supply of uncured concrete, said discharge end being operable to discharge uncured concrete to the support surface, said extendable conduit having at least two sections extendable and retractable relative to one another;

a movable wheeled base unit which supports said supply end of said extendable conduit, said movable wheeled base unit being steerable to move over and along the support surface; and

a movable support which is operable to movably support said discharge end of said extendable conduit, said movable support being steerable substantially separately from said movable wheeled base unit to move said movable support over the support surface at least while said discharge end discharges uncured concrete.

159. The concrete placing apparatus of claim **158**, wherein said extendable conduit comprises a telescoping conduit, whereby one of said at least two sections is telescopingly extendable and retractable with respect to the other of said at least two sections.

160. The concrete placing apparatus of claim **158**, wherein said base unit comprises an articulated wheeled base unit having a front portion which is pivotable relative to a rear portion of said base unit.

161. The concrete placing apparatus of claim **160**, wherein said supply end of said extendable conduit is supported by said front end of said articulated base unit.

162. The concrete placing apparatus of claim **161**, wherein said movable support is operable to movably support said discharge end of said extendable conduit along an arcuate path, said base unit being articulatable to steer said base unit.

163. The concrete placing apparatus of claim **162**, wherein said movable support comprises a wheeled vehicle which is steerable to movably support said discharge end of said extendable conduit.

164. The concrete placing apparatus of claim **163**, wherein said movable support is independently movable via a drive motor to movably support said discharge end of said extendable conduit.

165. The concrete placing apparatus of claim **164**, wherein said movable support includes a support member and is steerable via a pair of wheels which are pivotably mounted to said support member, said wheels being correspondingly pivotable relative to said support member to steer said movable support.

166. The concrete placing apparatus of claim **165**, wherein said extendable conduit comprises a telescoping conduit, whereby one of said at least two sections is telescopingly extendable and retractable with respect to the other of said at least two sections, one of said sections being supported by said front end of said articulated base unit, the other of said sections being supported by said movable support.

167. The concrete placing apparatus of claim **158**, wherein said movable support comprises a wheeled vehicle which is steerable to movably support said discharge end of said extendable conduit.

168. The concrete placing apparatus of claim **167**, wherein said movable support is independently movable via a drive motor to movably support said discharge end of said extendable conduit.

169. The concrete placing apparatus of claim **168**, said movable support includes a support member and is steerable via a pair of wheels which are pivotably mounted to said support member, said wheels being correspondingly pivotable relative to said support member about a generally vertical axis to steer said movable support.

170. The concrete placing apparatus of claim **169**, wherein said movable support is steerable in response to a double ended hydraulic cylinder, whereby one end of said hydraulic cylinder is extendable and retractable to pivot one of said wheels relative to said support and the other end of said hydraulic cylinder is correspondingly retractable and extendable to pivot the other one of said wheels relative to said support.

171. The concrete placing apparatus of claim **167**, wherein said movable support includes a pair of wheels mounted generally beneath a cross member extending laterally across said movable support.

172. The concrete placing apparatus of claim **171**, wherein said movable support includes support members extending downward from opposite sides of said cross member, each of said wheels being mounted to a corresponding one of said support members.

173. The concrete placing apparatus of claim **172**, wherein said wheels are pivotable about respective axes defined by said support members, said wheels being positioned below said cross member to provide clearance between an uppermost portion of said wheels and said cross member.

174. The concrete placing apparatus of claim **173**, wherein said wheels are pivotable about said respective axes to be generally beneath said cross member.

175. The concrete placing apparatus of claim **173**, wherein each of said wheels are rotatably driven by a drive motor positioned at a respective one of said support members.

176. The concrete placing apparatus of claim **175**, wherein said wheels are steerable via pivotal movement of said wheels about said respective axes in response to an actuator positioned at said cross member.

177. The concrete placing apparatus of claim **158** further including a discharge tube assembly mounted at said discharge end of said extendable conduit, said discharge tube assembly including a flexible tube and being operable to move a discharge end of said flexible tube along an arcuate path relative to said discharge end of said conduit.

178. The concrete placing apparatus of claim **177**, wherein said discharge end of said flexible tube is vertically adjustable relative to said discharge end of said extendable conduit.

* * * * *

UNITED STATES PATENT AND TRADEMARK OFFICE

CERTIFICATE OF CORRECTION

PATENT NO. : 6,623,208 B2
APPLICATION NO. : 09/738617
DATED : September 23, 2003
INVENTOR(S) : Philip J. Quenzi et al.

It is certified that error appears in the above-identified patent and that said Letters Patent is hereby corrected as shown below:

Column 52:
Line 21, Insert--wherein-- after "claim 168"

Signed and Sealed this

Fifteenth Day of August, 2006

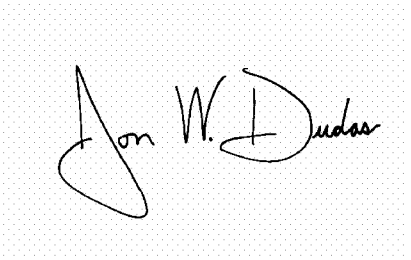

JON W. DUDAS
Director of the United States Patent and Trademark Office