US 20130192617A1

(19) United States

(12) Patent Application Publication

Thompson

(10) Pub. No.: US 2013/0192617 A1

(43) Pub. Date: Aug. 1, 2013

(54) **CARTOMIZER FOR ELECTRONIC CIGARETTES**

(76) Inventor: **Spencer Thompson**, Newbury Park, CA (US)

(21) Appl. No.: **13/360,843**

(22) Filed: **Jan. 30, 2012**

Publication Classification

(51) **Int. Cl.**
A24F 47/00 (2006.01)

(52) **U.S. Cl.**
USPC **131/329**

(57) **ABSTRACT**

A cartomizer for an electronic cigarette having an elongated, hollow body with a mouthpiece in a first end and a battery coupling in an opposite second end. An atomizing coil is disposed in the body generally perpendicular to a longitudinal axis of the cartomizer and has positive and negative terminal leads pressfit connected to positive and negative terminals separated by an insulative spacer in the battery coupling. A fibrous wick is inserted inside the atomizing coil and a cloth tube is disposed generally parallel to the longitudinal axis of the cartomizer and extends from the atomizing coil to the mouthpiece. A volatile liquid mixture of preferably 80% propylene glycol and 20% veggie glycol with liquid nicotine and/or flavoring is disposed in the body.

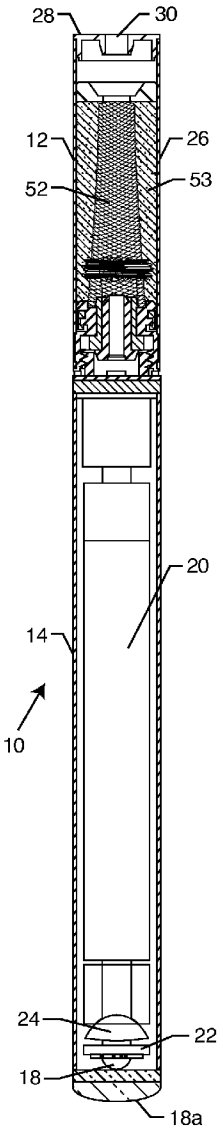

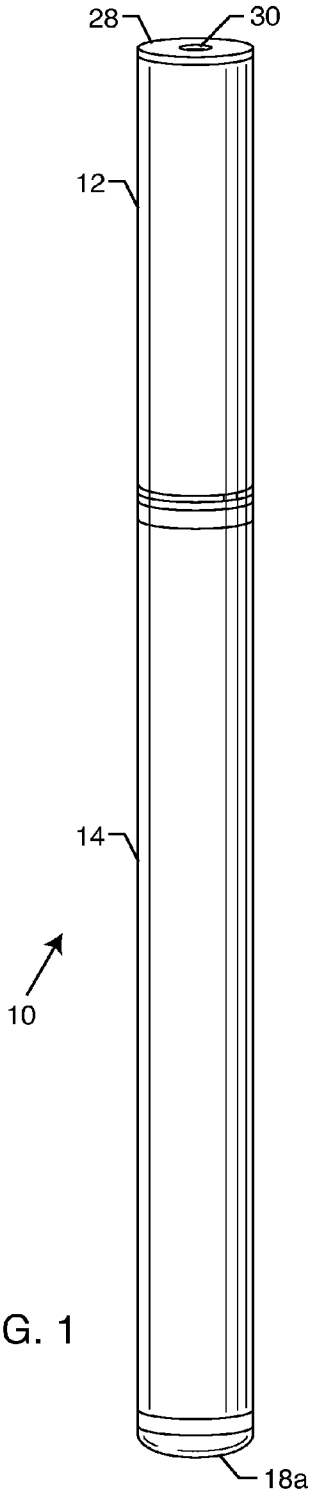

FIG. 1

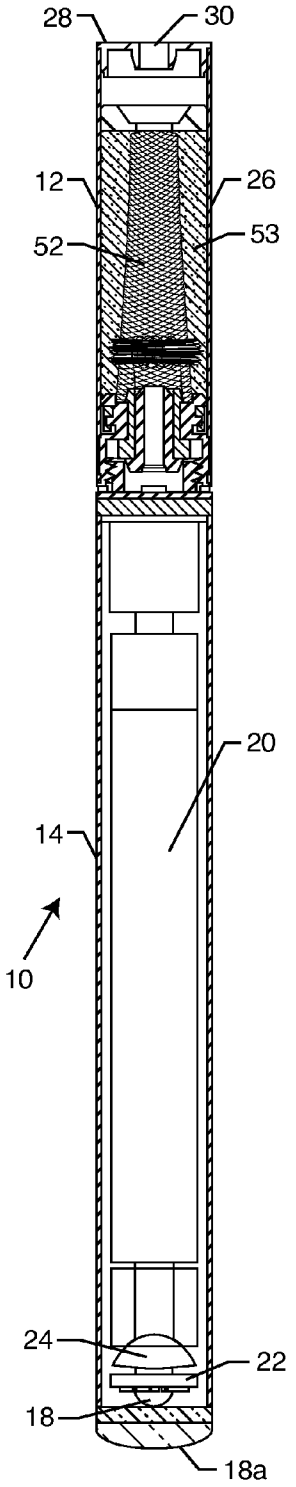

FIG. 2

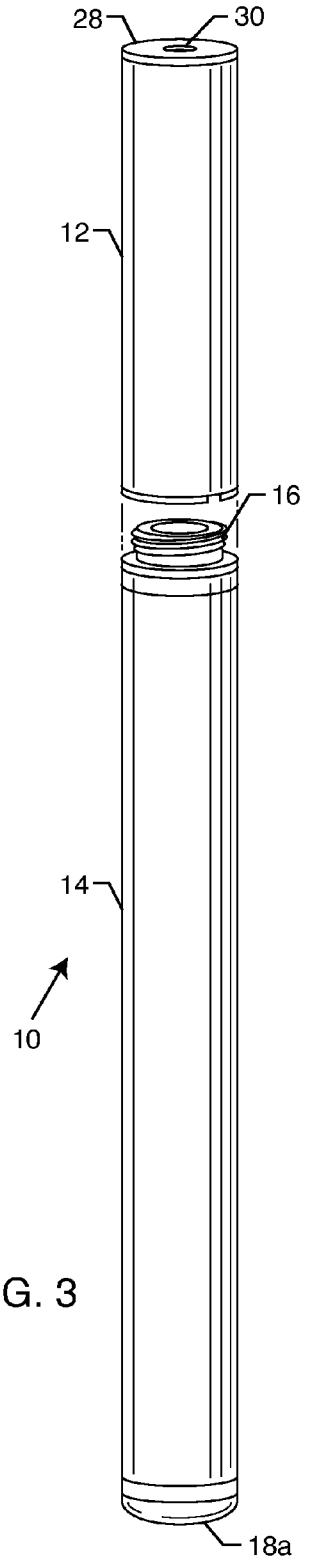

FIG. 3

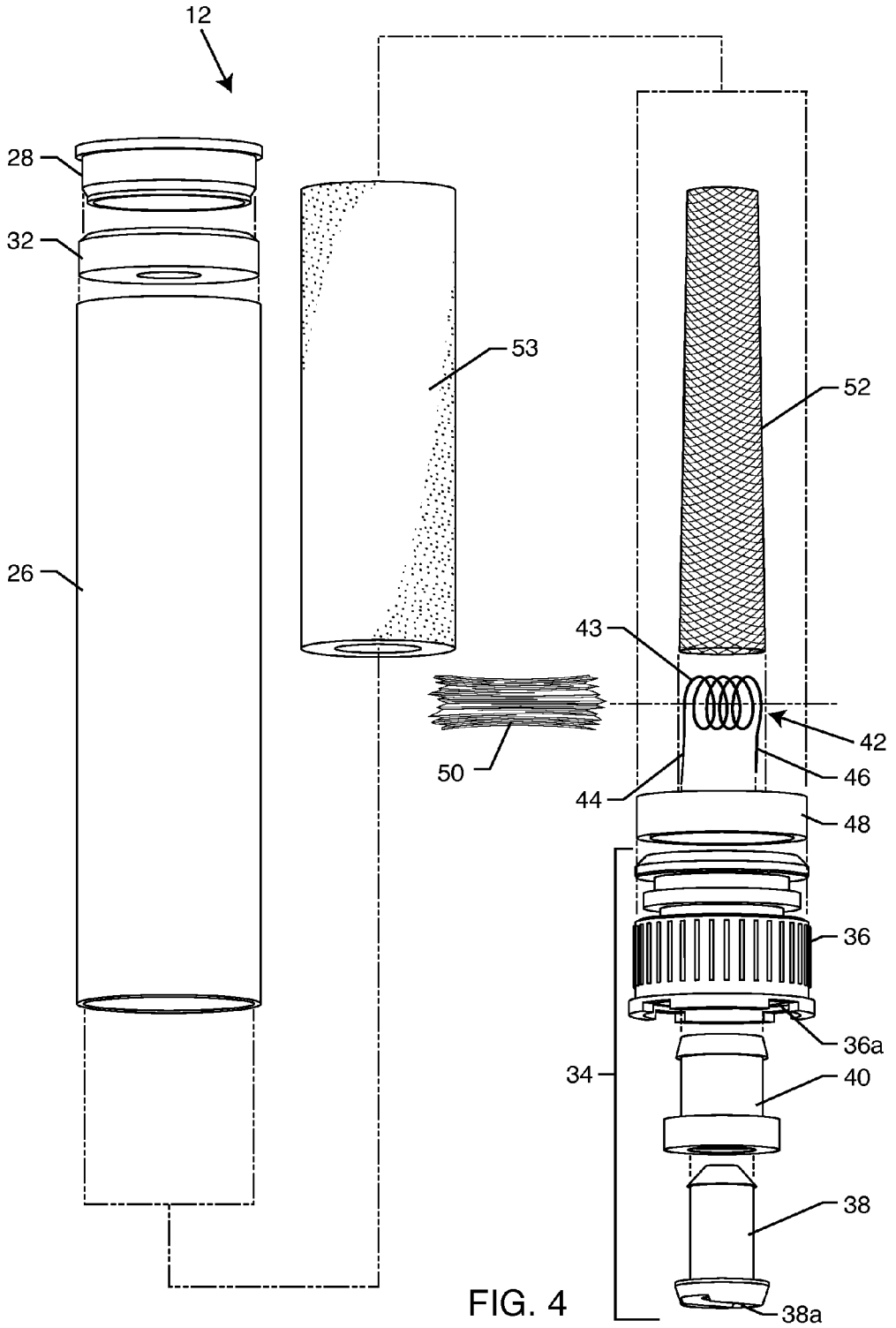

FIG. 4

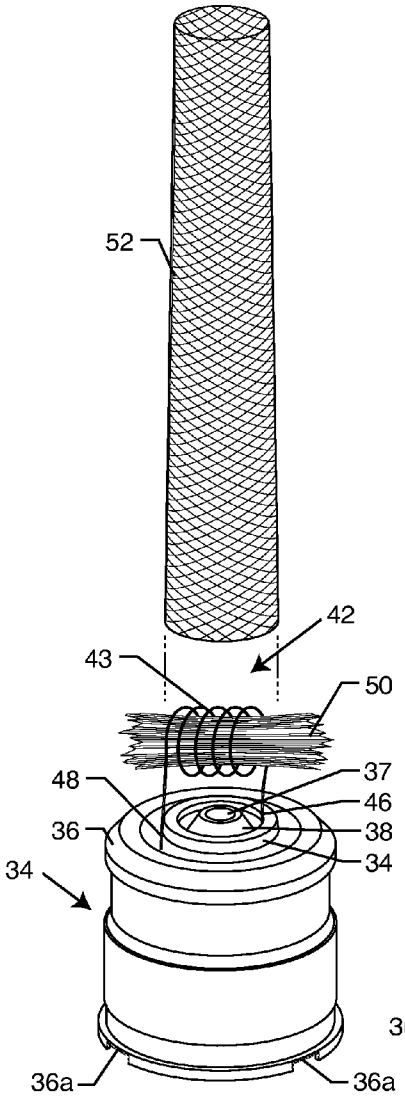

FIG. 5

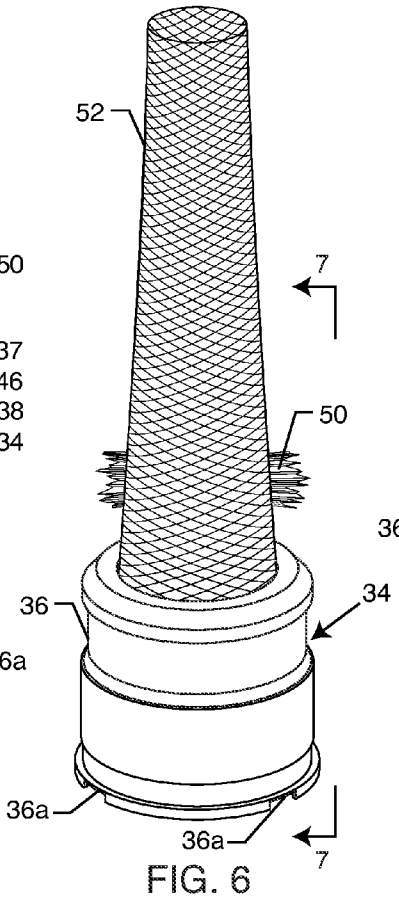

FIG. 6

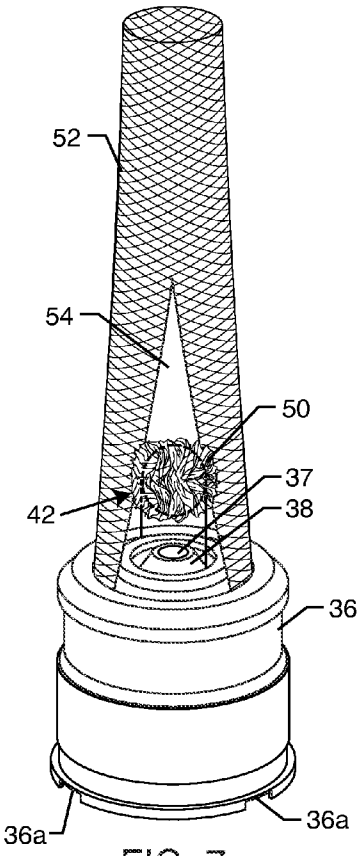

FIG. 7

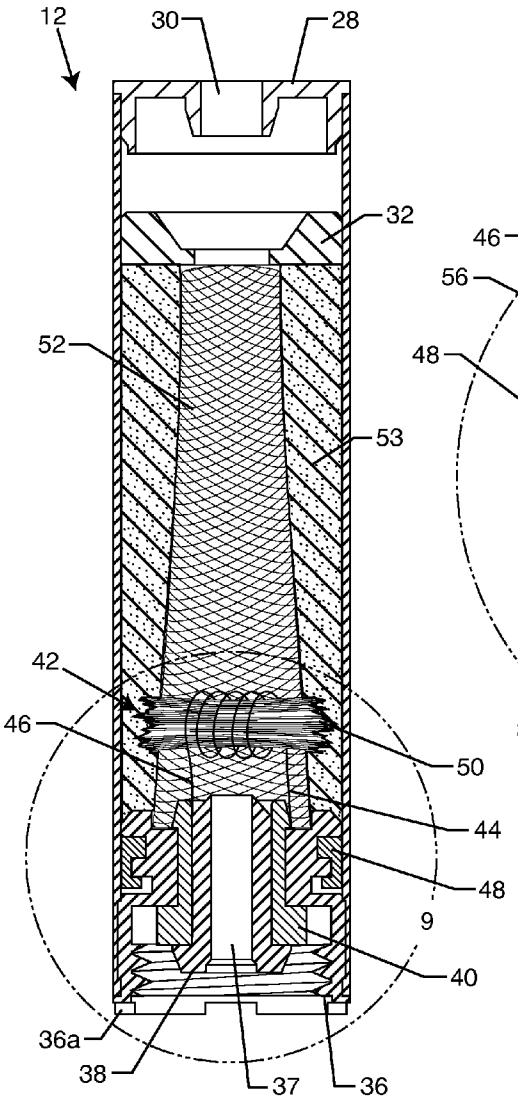
12
30
28
32
52
53
42
46
50
44
48
9
40
36a
38
37
36

FIG. 8

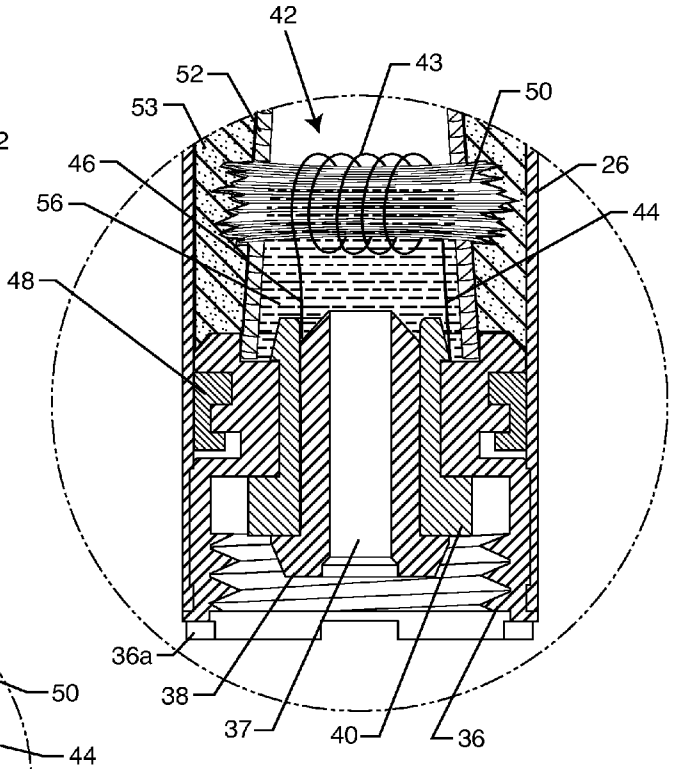
42
43
52
53
50
46
26
56
44
48
36a
38
37
40
36

FIG. 9

CARTOMIZER FOR ELECTRONIC CIGARETTES

BACKGROUND OF THE INVENTION

[0001] The present invention relates generally to electronic cigarettes. More particularly, the present invention is directed to a cartomizer for use with electronic cigarettes.

[0002] As is well known, cigarette smoking is not only harmful to the person smoking, but is also harmful to other people around the smoker due to second-hand smoke. In addition, a lit cigarette may cause a fire if the cigarette is not properly extinguished. Recently, various types of smoking simulators for tasting a flavor resembling that of a cigarette without burning a cigarette have been proposed.

[0003] For example, smoking simulators have been proposed, in which a heating element and solid flavor generating medium are provided in a heat-insulating tube and in which the heat-insulating tube and a power supply of the heating element are wrapped in fine quality wrapping paper and formed like a cigarette (for example, see Japanese Patent Laid-Open No. JP-A-3-232481). In a smoking simulator having such a configuration, electrical energy is supplied from the power supply to the heating element to heat the flavor generating medium which in turn generates flavor components. A flavor resembling that of a cigarette can be tasted by inhaling a gaseous mixture of the flavor components and air which has been taken into the smoking simulator.

[0004] In a smoking simulator having such a configuration, however, since it takes time to increase the temperature of the flavor generating medium, a long time is required for the flavor generating medium to generate a sufficient amount of flavor components. Thus, a sufficient amount of flavor components cannot be obtained at the beginning of simulated smoking, and a feeling similar to that of a cigarette cannot be provided from the beginning of simulated smoking. Since the amount of flavor components generated by the flavor generating medium cannot be controlled with high accuracy, the amount of flavor components cannot be adjusted according to the amount of inhalation. As a result, a feeling similar to that of a cigarette cannot be provided. Further, since there is no function of generating smoke similar to that of a cigarette and no function of generating a fire similar to that of a cigarette, a feeling similar to that of a cigarette cannot be provided.

[0005] Another configuration for an electronic cigarette has a resistance coil disposed along the length of the cigarette such that a volatile flavoring liquid is vaporized upon heating by the coil. Drawbacks of this configuration include that as the flavoring liquid is consumed, portions of the resistance coil disposed along the length of the cigarette are no longer submerged in the liquid and subject to corrosion and/or failure. Such corrosion and/or failure can result in inconsistent and/or incomplete use of the electronic cigarette. Such can also result in fire or other hazard leading to injury or damage. A damaged coil may become too hot and produce a bad taste, i.e., electrical or fire taste.

[0006] Therefore, there is a need for an electronic cigarette device where the resistance coil is not as readily exposed to such corrosion and/or failure. It is an object of the present invention to provide an electronic cigarette that fulfills these needs and provides other related advantages.

SUMMARY OF THE INVENTION

[0007] The present invention is directed to a cartomizer for an electronic cigarette. The cartomizer comprises an elongated, hollow body having a mouthpiece in a first end and a battery coupling in an opposite second end, said battery coupling having a positive terminal and a negative terminal. An electrically insulative spacer is pressfit between the positive and negative terminals. An atomizing coil is disposed generally perpendicular to a longitudinal axis of the cartomizer and has positive and negative terminal leads. The positive and negative terminal leads are pressfit between the insulative spacer and the respective positive or negative terminal forming a physical and electrical connection.

[0008] A fibrous wick is inserted inside the atomizing coil. A cloth tube is disposed inside the elongated, hollow body generally parallel to the longitudinal axis of the cartomizer and extends from the atomizing coil to the mouthpiece. An air intake vent is disposed in the battery coupling and is in communication with a central passageway through the battery coupling, elongated hollow body, and mouthpiece.

[0009] A volatile liquid mixture of an alcohol and a glycerol is disposed in the elongated, hollow body surrounding the atomizing coil. The volatile liquid mixture preferably comprises 80% propylene glycol and 20% veggie glycol. The volatile liquid mixture also preferably comprises liquid nicotine and/or flavoring.

[0010] A silicone rubber barrier is disposed in the elongated, hollow body proximate to the first end. A silicone rubber ring is disposed about the battery coupling in the second end of the elongated, hollow body. The silicone rubber barrier and silicone rubber ring together seal the elongated, hollow body against leaks so as to retain the volatile liquid mixture within the cartomizer.

[0011] Other features and advantages of the present invention will become apparent from the following more detailed description, taken in conjunction with the accompanying drawings, which illustrate, by way of example, the principles of the invention.

BRIEF DESCRIPTION OF THE DRAWINGS

[0012] The accompanying drawings illustrate the invention. In such drawings:

[0013] FIG. **1** is an illustration of an electronic cigarette according to the present invention, including the cartomizer and a battery base;

[0014] FIG. **2** is a cross-sectional view of the electronic cigarette of FIG. **1**;

[0015] FIG. **3** is an exploded view of the electronic cigarette of FIG. **1** where the cartomizer is separated from the battery base;

[0016] FIG. **4** is an exploded view of the cartomizer, illustrating assembly of the same;

[0017] FIG. **5** is a close-up view of the inside of the cartomizer, illustrating assembly of the cloth tubing with the atomizing coil;

[0018] FIG. **6** is a side view of the inside of the cartomizer;

[0019] FIG. **7** is an alternate side view of the inside of the cartomizer taken along line **7-7** of FIG. **6**;

[0020] FIG. **8** is a cross-sectional view of the cartomizer of the present invention; and

[0021] FIG. **9** is a close-up view of the cartomizer of the present invention as illustrated by circle **9** in FIG. **8**.

DETAILED DESCRIPTION OF THE PREFERRED EMBODIMENTS

[0022] As shown in the exemplary drawing, for purposes of illustration, the present disclosure for the electronic cigarette is referred to generally by the reference number **10**. As illustrated in FIGS. **1-3**, the electronic cigarette comprises two main components—a cartomizer **12** and a battery base **14**. The battery base **14** has a base coupling **16** at one end and an LED light **18** with a lens **18***a* at the opposite end. A battery cell **20** included in the battery base **14** is electrically connected to the base coupling **16** and the LED light **18**. A smart chip **22** is disposed in the electrical connection between the battery cell **20** and the LED light **18** to control operation of the electronic cigarette **10**. An air flow switch **24** is also disposed in the electronic connection between the battery cell **20** and the LED light **18** so as to automatically switch on when it detects inhalation on the electronic cigarette **10**. The configuration of such a battery base **14** is typical in prior art electronic cigarettes and will be understood by those skilled in the art.

[0023] The cartomizer **12**, the assembly of which is illustrated in FIG. **4**, comprises a generally elongated, hollow body or sleeve **26**. A first end of the body **26** includes a mouthpiece **28**. This mouthpiece **28** preferably comprises a plastic or silicone rubber cap including an inhalation hole **30** therethrough. As will be described more fully below, this inhalation hole **30** connects to a central passageway (described below) through the electronic cigarette such that it reaches the airflow switch **24** in the battery base **14**. A silicone rubber liquid barrier **32** is disposed in the body **26** proximate to the mouthpiece **28**. The silicone rubber liquid barrier **32** seals the first end of the body **26** against leakage of the flavor liquid as explained below.

[0024] The opposite second end of the body **26** has a battery coupling **34** configured to join with the base coupling **16** on the battery base **14**. A silicone rubber ring is disposed around a portion of the outer terminal **36** so as to create a watertight liquid seal between the body **26** and the portion of the outer terminal **36** that is inserted therein. The couplings **16** and **34** include electrically isolated positive and negative terminals as described more fully below. When the couplings **16** and **34** are connected, their matching positive and negative terminals are also connected to create an electrical connection between the cartomizer **12** and the battery base **14**. The couplings **16** and **34** are preferably threaded couplings, but may comprise any known form of coupling, including lugs and channels, snap-fit, or other similar connection means.

[0025] In a preferred embodiment, the battery coupling **34** comprises an outer terminal **36** and an inner terminal **38**. The outer terminal **36** and the inner terminal **38** are concentrically disposed in the second end of the body **26** and have central passageways **37**. The outer terminal **36** includes air intake vents **36***a* around its perimeter to allow air into the central passageway (described below) during inhalation. The inner terminal **38** also includes air vents **38***a* to connect the air intake vents **36***a* to the central passageway. A silicone rubber gasket **40** is disposed between the outer terminal **36** and the inner terminal **38** so as to prevent leakage and electrically insulate one terminal from the other, thus preventing a short circuit or other electrical failure. The silicone rubber gasket **40** is configured such that the concentric nesting of the outer terminal **36**, the silicone rubber gasket **40** and the inner terminal **38** results in a friction or press fit that maintains a tight connection.

[0026] As illustrated most clearly in FIGS. **8** and **9**, an atomizing coil **42** is disposed in the body **26** adjacent to the battery coupling **34**. The atomizing coil **42** has a body composed of loops of conductive wire **43** ending in positive and negative terminal leads **44**, **46**. The atomizing coil **42** is disposed horizontally, i.e., transverse to the long axis of the cartomizer **12**. This configuration produces the advantageous effect that the coils **43** remain covered or submerged in liquid for a longer duration of use, which reduces or eliminates oxidation or corrosion of the wire—extending its life and effectiveness. This is contrasted with prior art devices having extended coils or heating elements along the length of the cartomizer, wherein the most distal portion of the coils were not wetted or covered by liquid.

[0027] The positive terminal lead **44** is pressfit between one of the outer terminal **36** or the inner terminal **38** and the silicone rubber gasket **40**. The negative terminal lead **46** is pressfit, i.e., solderless, between the other of the outer terminal **36** or the inner terminal **38** and the silicone rubber gasket **40**. The solderless design minimizes the chance of a mechanical failure, i.e., breakage, of the solder. In this configuration, a partial circuit is created from the outer terminal **36** through the positive terminal lead **44**, the atomizing coil **42**, the negative terminal lead **46**, and to the inner terminal **38**. A person skilled in the art will realize that the positions of the outer terminal **36** and inner terminal **38** may be switched in this partial circuit with the cartomizer still operating as designed. Opposite ends of the outer terminal **36** and inner terminal **38** are connected to matching components in the battery base **14**, i.e., anode and cathode. When the battery coupling **34** is connected to the base coupling **16**, the partial circuit described above is completed by connection to matching anode and cathode components in the battery base **14**.

[0028] As clearly shown in FIGS. **5-7**, a fibrous wick **50** is inserted through the coils **43** on the atomizing coil **42**. An air tunnel **52** in the form of a cloth tube—made from material such as polyethylene terephthalate commercially sold under the name DACRON®—is disposed along the length of the body **26** such that one end of the air tunnel **52** sits over and surrounds the atomizing coil **42**. Opposite sides of the same end of the air tunnel **52** include triangular cutouts **54** such that the fibrous wick **50** protrudes through the cutouts **54**. The opposite end of the air tunnel **52** is disposed adjacent to the silicone rubber liquid barrier **32** near the mouthpiece **28**. The air tunnel **52** comprises part of the central passageway that extends from the inhalation hole **30**, through the cartomizer **12** and into the battery base **14**. A semi-absorbent packing material **53** surrounds the air tunnel **52** and fills in the gap between the air tunnel **52** and the body **26**.

[0029] A volatile liquid **56** is contained within the body **26** between the silicone rubber liquid barrier **32** and the silicone rubber ring **48**. The semi-absorbent packing material **53** keeps the volatile liquid **56** relatively stationary and maintains contact with the fibrous wick **50** such that it retains moisture. The volatile liquid **56** is absorbed by the fibrous wick **50** and vaporized by the atomizing coil **42** as discussed below. The volatile liquid **56** preferably comprises a mixture of an alcohol and a glycerol. Ideally, the alcohol comprises propylene glycol and the glycerol comprises veggie glycol. A mixture of 80% propylene glycol and 20% veggie glycol produces an optimum result from the electronic cigarette **10**. The propylene glycol is commonly used in electronic cigarettes as it is colorless, slightly sweet and produces more flavor. Propylene glycol is often used in smoke/fog machines

commonly found in theaters and nightclubs. The veggie glycol is smoother, slightly thicker and sweeter, and produces more vapor than the propylene glycol. Veggie glycol is also known as vegetable glycerin, glycerine or glycerol. Preferably, only medical grade glycerin, i.e., glycerin USP, is used. The mixture of these chemicals produces vapor and provides a similar sensation to inhaling tobacco smoke when the liquid **56** is vaporized by the atomizing coil **42**. Liquid nicotine (about 18 mg) and/or a flavoring may be added to the volatile liquid **56** such that the resultant vapor more closely resembles cigarette smoke.

[0030] When an electrical current is applied to the atomizing coil **42** it heats up as a resistor. Upon reaching a predetermined temperature, the volatile liquid **56**, which has been absorbed into the fibrous wick **50**, is vaporized and passes through the air tunnel **52** as vapor simulating cigarette smoke.

[0031] Although several embodiments have been described in detail for purpose of illustration, various modifications may be made without departing from the scope and spirit of the invention. Accordingly, the invention is not to be limited, except as by the appended claims.

What is claimed is:

1. A cartomizer for an electronic cigarette, the cartomizer comprising:

an elongated, hollow body having a mouthpiece in a first end and a battery coupling in an opposite second end, said battery coupling having a positive terminal and a negative terminal;

an electrically insulative spacer pressfit between the positive and negative terminals;

an atomizing coil disposed generally perpendicular to a longitudinal axis of the cartomizer and having positive and negative terminal leads, wherein the positive and negative terminal leads are pressfit between the insulative spacer and the respective positive or negative terminal forming a physical and electrical connection.

2. The cartomizer of claim **1**, further comprising a fibrous wick inserted inside the atomizing coil.

3. The cartomizer of claim **1**, further comprising a cloth tube disposed inside the elongated, hollow body generally parallel to the longitudinal axis of the cartomizer and extending from the atomizing coil to the mouthpiece.

4. The cartomizer of claim **1**, further comprising an air intake vent in the battery coupling, said air intake vent communicating with a central passageway through the battery coupling, elongated hollow body, and mouthpiece.

5. The cartomizer of claim **1**, further comprising a volatile liquid mixture of an alcohol and a glycerol in the elongated, hollow body, surrounding the atomizing coil.

6. The cartomizer of claim **6**, wherein the volatile liquid mixture comprises eighty percent propylene glycol and twenty percent veggie glycol.

7. The cartomizer of claim **6**, wherein the volatile liquid mixture further comprises liquid nicotine and/or flavoring.

8. The cartomizer of claim **1**, further comprising a silicone rubber barrier disposed in the elongated, hollow body proximate to the first end and a silicone rubber ring disposed about the battery coupling in the second end of the elongated, hollow body.

9. A cartomizer for an electronic cigarette, the cartomizer comprising:

an elongated, hollow body having a mouthpiece in a first end and a battery coupling in an opposite second end, said battery coupling having a positive terminal and a negative terminal;

an electrically insulative spacer pressfit between the positive and negative terminals;

an atomizing coil disposed generally perpendicular to a longitudinal axis of the cartomizer and having positive and negative terminal leads, wherein the positive and negative terminal leads are pressfit between the insulative spacer and the respective positive or negative terminal forming a physical and electrical connection;

a cloth tube disposed inside the elongated, hollow body generally parallel to the longitudinal axis of the cartomizer and extending from the atomizing coil to the mouthpiece; and

a volatile liquid mixture of an alcohol and a glycerol in the elongated, hollow body, surrounding the atomizing coil.

10. The cartomizer of claim **9**, further comprising a fibrous wick inserted inside the atomizing coil.

11. The cartomizer of claim **9**, further comprising an air intake vent in the battery coupling, said air intake vent communicating with a central passageway through the battery coupling, elongated hollow body, and mouthpiece.

12. The cartomizer of claim **9**, wherein the volatile liquid comprises eighty percent propylene glycol and twenty percent veggie glycol.

13. The cartomizer of claim **9**, wherein the volatile liquid further comprises liquid nicotine and/or flavoring.

14. The cartomizer of claim **9**, further comprising a silicone rubber barrier disposed in the elongated, hollow body proximate to the first end and a silicone rubber ring disposed about the battery coupling in the second end of the elongated, hollow body.

15. A cartomizer for an electronic cigarette, the cartomizer comprising:

an elongated, hollow body having a mouthpiece in a first end and a battery coupling in an opposite second end, said battery coupling having a positive terminal and a negative terminal;

an electrically insulative spacer pressfit between the positive and negative terminals;

an atomizing coil disposed generally perpendicular to a longitudinal axis of the cartomizer and having positive and negative terminal leads, wherein the positive and negative terminal leads are pressfit between the insulative spacer and the respective positive or negative terminal forming a physical and electrical connection;

a cloth tube disposed inside the elongated, hollow body generally parallel to the longitudinal axis of the cartomizer and extending from the atomizing coil to the mouthpiece;

a fibrous wick inserted inside the atomizing coil; and

a volatile liquid mixture of an alcohol, a glycerol, and liquid nicotine and/or flavoring in the elongated, hollow body, surrounding the atomizing coil and fibrous wick.

16. The cartomizer of claim **15**, further comprising an air intake vent in the battery coupling, said air intake vent communicating with a central passageway through the battery coupling, elongated hollow body, and mouthpiece.

17. The cartomizer of claim **15**, wherein the volatile liquid comprises 80% propylene glycol and 20% veggie glycol.

18. The cartomizer of claim **15**, further comprising a silicone rubber barrier disposed in the elongated, hollow body

proximate to the first end and a silicone rubber ring disposed about the battery coupling in the second end of the elongated, hollow body.

* * * * *