Trials@uspto.gov
571-272-7822

Paper 9
Date: May 8, 2024

UNITED STATES PATENT AND TRADEMARK OFFICE

BEFORE THE PATENT TRIAL AND APPEAL BOARD

DROPBOX, INC. and MICROSOFT CORPORATION,
Petitioner,

v.

DATANET, LLC,
Patent Owner.

IPR2024-00078
Patent 8,473,478 B2

Before JOSIAH C. COCKS, GEORGE R. HOSKINS, and
BACH V. HOANG, *Administrative Patent Judges*.

HOSKINS, *Administrative Patent Judge*.

DECISION
Granting Institution of *Inter Partes* Review
35 U.S.C. § 314

I. INTRODUCTION

Dropbox, Inc. and Microsoft Corporation (collectively, "Petitioner") have filed a Petition (Paper 3, "Pet.") pursuant to 35 U.S.C. §§ 311–319 to institute an *inter partes* review of U.S. Patent No. 8,473,478 B2 (Ex. 1001, "the '478 patent"), claims 1–6 and 8–11. Datanet, LLC ("Patent Owner") has filed a Preliminary Response (Paper 7, "Prelim. Resp.") opposing institution of review.

The Petition, to justify institution of review, must demonstrate a reasonable likelihood that Petitioner would prevail with respect to at least one challenged claim. *See* 35 U.S.C. § 314(a). Applying that standard on behalf of the Director (37 C.F.R. § 42.4(a)), we institute an *inter partes* review to determine whether Petitioner demonstrates by a preponderance of the evidence that the challenged claims are unpatentable, considering all grounds in the Petition.

II. BACKGROUND

A. Real Parties-in-Interest and Related Proceedings

Petitioner identifies Dropbox, Inc. and Microsoft Corporation as real parties-in-interest. *See* Pet. vii. Patent Owner identifies Datanet, LLC as a real party-in-interest. *See* Paper 5 (Patent Owner's Mandatory Notices), 2.

The parties identify two co-pending district court litigations involving the '478 patent. *See* Pet. vii; Paper 5, 2. The first is *Datanet LLC v. Dropbox, Inc.*, No. 6:22-cv-01142 (W.D. Tex.). The second is *Datanet LLC v. Microsoft Corporation*, No. 2:22-cv-01545 (W.D. Wash.).

Petitioner has filed two other related IPR petitions, to challenge continuation patents of the '478 patent. They are IPR2024-00079

challenging U.S. Patent No. 9,218,348 B2, and IPR2024-00080 challenging U.S. Patent No. 10,585,850 B2. *See* Pet. vii; Paper 5, 2.

The parties also identify a co-pending *ex parte* reexamination of the '478 patent, Reexam Control No. 90/015,216, requested by Unified Patents, LLC. *See* Pet. vii, 3–5; Paper 5, 2.

B. The '478 Patent

The '478 patent is entitled "Automatic Real-Time File Management Method and Apparatus," and relates to archiving computer files. *See* Ex. 1001, codes (54) and (57). Its method "captures files just before and/or just after they have been changed to minimize loss of data between backup events." *Id.* at 2:56–59.

Figure 1, reproduced below, is a block diagram of a computing device. *See id.* at 3:54–55, 4:63–64.

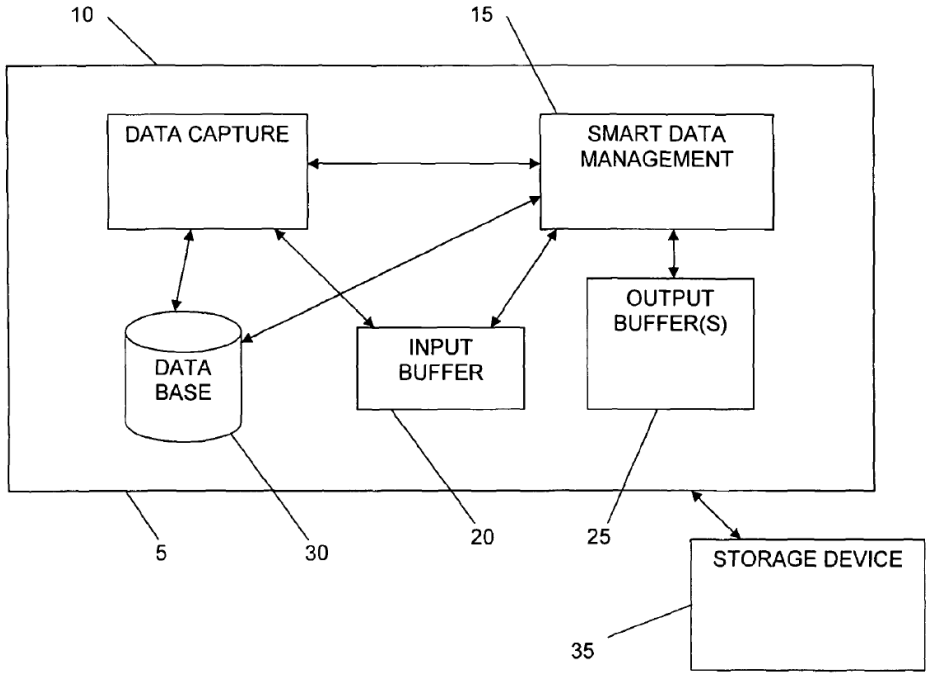

FIGURE 1

'478 Patent, Figure 1.

Figure 1 illustrates computing device 5 comprising file capture block 10, smart data management block 15, input buffer 20, one or more output buffers 25, and database 30. *See id.* at 4:63–67. Figure 5 also illustrates storage device 35 that may be internal or external to computing device 5. *See id.* at 4:67–5:2, 5:26–30.

"[F]ile capture block 10 detects an instruction to perform an operation on an operating file initiated by the resident program of computing device 5," and "the instant before and/or the instant after the operating file is changed, file capture block 10 captures the operating file or portions thereof." *Id.* at 5:4–12. Operations which might trigger file capturer 10 include opening the file (*see id.* at 6:54–60), saving the file (*see id.* at 7:11–19), renaming the file (*see id.* at 7:28–33), and deleting the file (*see id.* at 7:57–63). The "[f]ile capture is . . . executed by creating an archive file from the operating file" and storing the archive file "in a temporary storage location, internal or external to the computer, such as input buffer 20." *Id.* at 5:22–25. File capturer 10 also records the location of the archive file in database 30, in order to create a record of each version of the operating file. *See id.* at 5:15–21.

"[S]mart data management block 15 manages the migration of the archive file from the input buffer 20 through the output buffers 25 to storage device 35." *Id.* at 5:31–34. Smart data manager 15 can migrate archive files from input buffer 20 to storage device 35 synchronously or asynchronously with the file capture procedures of file capturer 10. *See id.* at 5:34–36. Thus, smart data manager 15 "examines input buffer 20 for the presence of archive files . . . upon the occurrence of an event" such as receipt of a message from file capturer 10 or other programs on computing device 5, or

expiration of a time interval. *Id.* at 5:39–46. "If archive files are detected" then "smart data manager 15 updates database 25 [sic '30'] to indicate the location of the archive files" as "resident in input buffer 20." *Id.* at 6:24–27.

Smart data manager 15 also "examine[s] database 30 to determine a defined storage location for each of the archive files stored in input buffer 20," and "moves the archive files to one or more output buffers 25," wherein each output buffer 25 corresponds to a particular final storage location. *Id.* at 5:46–57, 6:27–31. "Smart data manager 15 updates database 30 to indicate that the archive files are now stored in the output buffer [25]." *Id.* at 6:31–33.

Then: "Upon the occurrence of an event, and/or at defined time intervals, smart data management block 15 moves the archive files from the output buffers 25 to their respective storage device(s) 35." *Id.* at 5:58–61, 6:34–35. Such events can include receipt of a message concerning the status of storage device(s) 35 being ready for use, or expiration of a time interval. *See id.* at 5:61–6:2, 6:12–18. Smart data manager 15 further "updates database 25 [sic '30'] to indicate that the archive files are stored in one or more storage devices 30 [sic '35']." *Id.* at 6:41–43.

C. The Claims of the '478 Patent

The '478 patent includes eleven claims. *See* Ex. 1001, 8:39–10:37. Claim 1 is illustrative, and it recites, with Petitioner's reference numbering added:

> [1.1] 1. In a computing device, a method for archiving files comprising:
>
> [1.2] detecting an instruction by an operating system to perform an operation on an operating file;

> [1.3] creating an archive file from the operating file and storing the archive file in a temporary first storage location temporally proximate to the operation being performed on the operating file and responsive to detecting the instruction;
>
> [1.4] searching the first temporary storage location for the archive file responsive to the occurrence of a first event; and
>
> [1.5] moving the archive file to a second storage location responsive to a second event, the second storage location being a permanent storage location,
>
> [1.6] after storing the archive file in the first temporary storage location, updating a database to indicate that the archive file is located in the first temporary storage location;
>
> [1.7] determining a final destination for the archive file;
>
> [1.8] moving the archive file from the first temporary storage location to an intermediate storage location;
>
> [1.9] updating the database to indicate that the archive file is located in the intermediate storage location; and
>
> [1.10] after moving the archive file to the second storage location, updating the database to indicate that the archive file is located in the second storage location.

Ex. 1001, 8:40–65; *see* Pet. 11–12. Claims 2–7 depend from claim 1. *See* Ex. 1001, 8:66–9:11.

Claim 8 is an independent claim which recites limitations [1.1]–[1.5] of claim 1, then adds "wherein the first event includes a message from a timer." *Id.* at 9:12–27.

Claim 9 is an independent claim which recites limitations [1.1]–[1.5] of claim 1, then adds "wherein the second event includes a message from a timer." *Id.* at 9:28–10:4.

Claim 10 is an independent claim which recites limitations [1.1]–[1.5] of claim 1, then adds "wherein the second event includes a message indicating when the second storage location is available." *Id.* at 10:5–21.

Claim 11 is an independent claim which recites limitations [1.1]–[1.5] of claim 1, then adds "wherein said first event is different from said second event." *Id.* at 10:22–37.

D. Asserted Prior Art

Petitioner's challenges rely on the following five references, listed in chronological order by issue or publication date. *See* Pet. 2.

Name	**Reference**	**Date**	**Exhibit No.**
Kenley	US 5,276,867	Jan. 4, 1994	1014
Long	US 5,325,519	June 28, 1994	1004
Whiting	US 5,778,395	July 7, 1998	1006
Cabrera	US 5,953,729	Sept. 14, 1999	1005
Schneider	WO 99/12101 A2	Mar. 11, 1999	1020

See Ex. 1004, code (45); Ex. 1005, code (45); Ex. 1006, code (45); Ex. 1014, code (45); Ex. 1020, code (43). Petitioner asserts these references are each prior art to the '478 patent, which Patent Owner does not dispute at this preliminary stage of the proceeding. *See* Pet. 13–14 & n.1 (Kenley), 14 (Long), 57 (Cabrera), 61 (Schneider), 62 (Whiting).

E. Asserted Grounds

Petitioner asserts two grounds of unpatentability, as follows. *See* Pet. 2.

Ground	Claims Challenged	35 U.S.C. §[1]	References
1	1–6, 8–11	103(a)	Kenley, Long
2	1–6, 8–11	103(a)	Cabrera, Schneider, Whiting

F. Testimonial Evidence

Petitioner relies on the proffered expert witness testimony of David Maier, Ph.D. (Exhibit 1003). Patent Owner relies on the proffered expert witness testimony of Mr. Zaydoon Jawadi (Exhibit 2001).

III. PETITIONER'S GROUNDS OF UNPATENTABILITY

A. Legal Standards

1. Petitioner's Burden of Proof

Petitioner bears the burden of proving unpatentability of the challenged claims, and this burden of persuasion never shifts to Patent Owner. *See Dynamic Drinkware, LLC v. Nat'l Graphics, Inc.*, 800 F.3d 1375, 1378 (Fed. Cir. 2015). Ultimately, Petitioner must prove unpatentability by a preponderance of the evidence. *See* 35 U.S.C. § 316(e); 37 C.F.R. § 42.1(d).

2. Law of Obviousness

A patent claim is unpatentable under 35 U.S.C. § 103 if the differences between the claimed subject matter and the prior art are such that

[1] The Leahy-Smith America Invents Act, Pub. L. No. 112-29, 125 Stat. 284 (2011) ("AIA") revised § 103, effective in March 2013. The '478 patent was filed in September 2001 (*see* Ex. 1001, code (22)), so we apply the pre-AIA version of § 103.

the subject matter, as a whole, would have been obvious at the time the invention was made to a person having ordinary skill in the art to which said subject matter pertains. *KSR Int'l Co. v. Teleflex Inc.*, 550 U.S. 398, 406 (2007). The question of obviousness is resolved on the basis of underlying factual determinations including: (1) the scope and content of the prior art; (2) any differences between the claimed subject matter and the prior art; (3) the level of ordinary skill in the art; and (4) objective evidence of nonobviousness, if made available in the record, which has not happened here. *See Graham v. John Deere Co.*, 383 U.S. 1, 17–18 (1966).

B. Level of Ordinary Skill in the Art

The level of ordinary skill in the art is "a prism or lens" through which we view the prior art and the claimed invention. *Okajima v. Bourdeau*, 261 F.3d 1350, 1354–55 (Fed. Cir. 2001) (citing *Al-Site Corp. v. VSI Int'l, Inc.*, 174 F.3d 1308, 1324 (Fed. Cir. 1999)). "This reference point prevents . . . factfinders from using their own insight or, worse yet, hindsight, to gauge obviousness." *Id.* at 1355. "The person of ordinary skill in the art is a hypothetical person who is presumed to know the relevant art" at the time of the invention. *In re GPAC Inc.*, 57 F.3d 1573, 1579 (Fed. Cir. 1995). In finding the level of ordinary skill in the art, we may consider various factors, including: "(1) the educational level of the inventor; (2) type of problems encountered in the art; (3) prior art solutions to those problems; (4) rapidity with which innovations are made; (5) sophistication of the technology; and (6) educational level of active workers in the field." *Best Med. Int'l, Inc. v. Elekta Inc.*, 46 F.4th 1346, 1353 (Fed. Cir. 2022) (citations

omitted). "The patent's purpose can also be informative." *Id.* (citation omitted).

Petitioner contends a person having ordinary skill in the art pertaining to the '478 patent "would have held a bachelor's degree in computer science, electrical engineering, computer engineering, or a related field, and one or more years of experience in the design and development of file management, restoration, and archival systems," and "[m]ore education, e.g., a Master's or Ph.D., could substitute for less work experience and vice versa." Pet. 12–13; Ex. 1003 ¶¶ 29–31.

Patent Owner "does not offer a competing definition at this time." Prelim. Resp. 6–7.

For purposes of this Decision, we adopt Petitioner's undisputed formulation of ordinary skill in the art, which appears to comport with the teachings of the '478 patent and the prior art of record. *See Okajima*, 261 F.3d at 1355.

C. Claim Construction

We interpret the '478 patent claims "using the same claim construction standard that would be used to construe the claim in a civil action under 35 U.S.C. 282(b)." 37 C.F.R. § 42.100(b). This "includ[es] construing the claim in accordance with the ordinary and customary meaning of such claim as understood by one of ordinary skill in the art and the prosecution history pertaining to the patent." *Id.*

Neither party proffers any express claim constructions at this time. *See* Pet. 13; Prelim. Resp. 15. We similarly determine, based on the arguments and evidence presently presented, that no explicit construction of

any claim term is needed for purposes of this Decision. *See Realtime Data, LLC v. Iancu*, 912 F.3d 1368, 1375 (Fed. Cir. 2019) ("The Board is required to construe 'only those terms . . . that are in controversy, and only to the extent necessary to resolve the controversy.'") (quoting *Vivid Techs., Inc. v. Am. Sci. & Eng'g, Inc.*, 200 F.3d 795, 803 (Fed. Cir. 1999)).

D. Ground One — Obviousness over Kenley and Long

In Ground One, Petitioner asserts claims 1–6 and 8–11 of the '478 patent are unpatentable as having been obvious over Kenley and Long. *See* Pet. 2, 13–57. Patent Owner disagrees. *See* Prelim. Resp. 7–11, 15–39.

We have reviewed the preliminary record, and we conclude Petitioner has demonstrated a reasonable likelihood of prevailing on its assertions at least for claim 1. First, we summarize the disclosures of Kenley and Long, then we consider the parties' opposing contentions concerning the challenged claims.

1. Kenley

Kenley is entitled "Digital Data Storage System with Improved Data Migration." Ex. 1014, code (54). Kenley provides "primary, secondary, and backing storage elements characterized by respectively longer access times" and greater storage capacities. *Id.* at code (57), 2:44–55.

Figure 1B, reproduced below, depicts a digital data storage and data migration apparatus. *See id.* at 4:29–31.

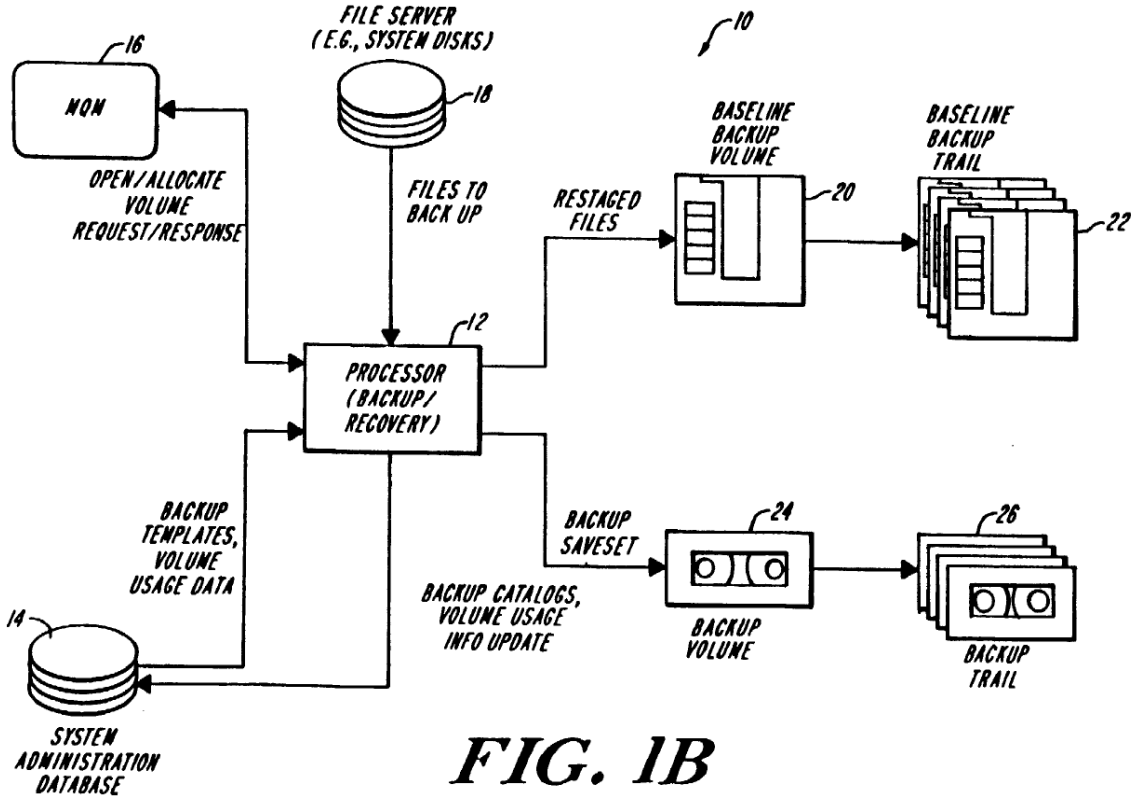

FIG. 1B

Kenley, Figure 1B.

Figure 1B illustrates digital data processing system 10 with backup storage. *See id.* at 6:29–31. Processor 12 backs up files stored on system disks 18, using baseline backup volume 20 (e.g., optical disk media) and full / incremental backup volume 24 (e.g., magnetic tape). *See id.* at 6:31–35, 6:44–56, 7:2–7.

To perform a baseline backup to volume 20, processor 12 scans the file directories of system disks 18 for files that need to be backed up, and copies those files to volume 20. *See id.* at 7:19–50, 8:43–65. Next: "A detection element compares the quantity of data stored in the secondary storage element [i.e., volume 20] to a selected fullness threshold, and generates a secondary-storage-full signal when the quantity of stored data exceeds the selected fullness threshold." *Id.* at 2:56–60. "A data migration

element . . . automatically migrates data from secondary storage to backing store [i.e., backup volume 24] at selected times, or in response to the secondary-storage-full signal." *Id.* at 2:60–3:16.

Processor 12 additionally utilizes system administration database 14 to store "backup catalogs (i.e., lists of all files copied to specific backup savesets)" including all files backed up to volumes 20 and 24. *Id.* at 6:35–40, 8:26–29 (Fig. 1B). This "provid[es] transparent access to catalogued file attribute data representative of the attributes of the data files stored in the secondary storage element" and allows processor 12 to retrieve backed up files from volumes 20 and 24. *Id.* at 3:17–28, 10:34–68.

2. Long

Long is entitled "Fault Tolerant Computer with Archival Rollback Capabilities." Ex. 1004, code (54). Long explains: "A *fault tolerant* architecture provides a system with redundant resources," so "[i]f one resource fails, another can be assigned in its place giving the ability to continue processing the application without disruption." *Id.* at 1:18–22 (emphasis added). Such systems correct system errors by restoring or "rolling back" the system to a previously stored correct state for continued operation. *See id.* at 1:30–38. Long focuses on implementing a fault tolerant storage medium, such as a hard disk. *See id.* at 1:46–64.

Figures 2a and 2b are reproduced below.

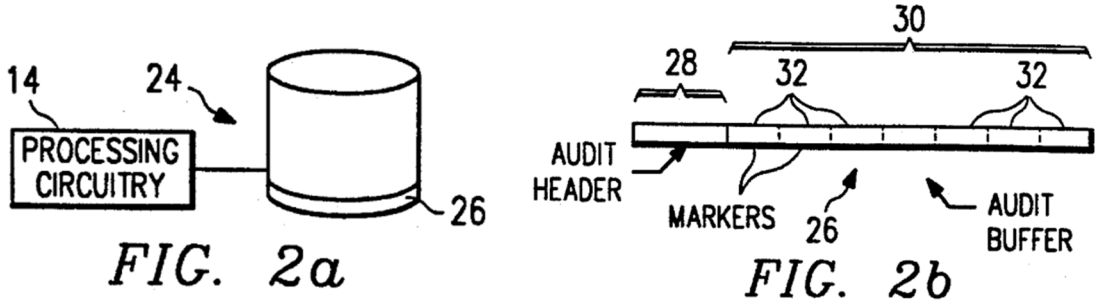

Long, Figures 2a and 2b.

Figure 2a is a diagrammatic view of processing unit 14 and an associated hard disk 24, wherein the hard disk includes audit partition region 26. *See id.* at 2:45–50 (Fig. 1), 4:28–39. Figure 2b is a diagrammatic view of audit partition region 26, made up of audit header 28 and audit buffer 30. *See id.* at 2:23–25, 4:40–44. "[A]udit header 28 contains information that is used to manage the audit buffer 30" and "archive media." *Id.* at 4:44–47, 4:57–5:25 (Table 1, listing the audit header fields). "[A]udit buffer 30 is used to record events such as writes to the hard disk(s), power failure, power on and system reboot" wherein "[e]ach event is captured in [an] audit marker [32]" which includes "[t]he data that was read from the hard disk." *Id.* at 5:26–35.

Thus: "Processing circuitry detects accesses to [hard disk 24] which would alter data thereon, and stores the data to be altered in the audit partition region [26] for later restoration." *Id.* at 1:65–2:13. In particular, when an application sends a request to modify the contents of hard disk 24, an audit subsystem reads the data on the disk to be modified (i.e., before it is modified) and then appends the data "to a semiconductor memory buffer prior to writing the data to the audit partition [26] on the hard disk [24]," because writing to the audit partition "is significantly slower" than writing to the semiconductor memory buffer. *Id.* at 7:28–46 (emphasis added)

(describing Fig. 5, steps 46, 48, 50, and 52), 7:54–58. Then: "When the memory buffer is full . . . or the processing unit 14 requires memory used in the memory buffer for another purpose, the audit subsystem writes the data stored in the memory buffer to the end of the audit buffer 30 on" hard disk 24, "and updates the audit header (in the memory buffer) to reflect the changes." *Id.* at 7:46–53 (describing Fig. 5, steps 54, 56, and 58).

Next, "[i]f the audit buffer [30] becomes full," an archive subsystem begins to "archive" audit buffer 30 to an "archive media" at predetermined intervals such as every five seconds. *Id.* at 8:29–9:7 (describing Fig. 6, steps 60, 62, 64, 66, and 68). The archive media is "a removable media, such as a floppy disk." *Id.* at 7:12–14, 8:29–33. "After the write is completed, the audit header in memory is modified to show the removal of the audit markers from the audit buffer 30." *Id.* at 9:7–9.

In this way: "In the event of a failure, the audit partition 26 and any archive media allow rollback of the state of the hard disk to a previous known state." *Id.* at 9:10–12.

3. Claim 1

Petitioner provides arguments and evidence in support of its contention that claim 1 is unpatentable as having been obvious over Kenley and Long. *See* Pet. 13–46; Ex. 1003 ¶¶ 40–95. Patent Owner opposes. *See* Prelim. Resp. 7–11, 15–39; Ex. 2001 ¶¶ 69–300. We conclude Petitioner has demonstrated a reasonable likelihood of prevailing on its contentions, for the following reasons.

(a) Kenley Versus Claim 1

Petitioner relies on Kenley as disclosing a method for archiving "data organized as *files*." Pet. 14 (emphasis added) (citing Ex. 1014, 1:13–15, 2:44–55, 3:1–2, 3:29–30, 4:54–66); *id.* at 19 (referring to "Kenley's file-based backup system), 25–42 (repeatedly referring to "a file-based system such as Kenley's"); Ex. 1003 ¶¶ 40–41, 49. Patent Owner agrees that Kenley archives files. *See, e.g.*, Prelim. Resp. 7–8 ("Kenley teaches a variation on the concept of hierarchical storge system for files" (citing Ex. 1014, 4:48–51)), 9 (citing Ex. 1014, 3:29–34, 5:16–20, 5:48–6:18); Ex. 2001 ¶ 166. We do too, based on the present record. *See* Ex. 1014, 3:1–2, 3:29–39, 5:16–20, 5:48–56; Ex. 1003 ¶¶ 40–41; Ex. 2001 ¶ 166.

Petitioner also relies on Kenley as disclosing the use of a *relational database* to record "a 'system catalog' for maintaining and providing transparent access to file attribute and location data" as part of "migrating data from secondary storage to the backing store." Pet. 14, 36 (citing Ex. 1014, 2:6–14, 2:56–68, 3:17–28, 6:35–40, 8:26–29); *see also id.* at 22–23 ("Fourth"), 38–39 (discussing combination of Kenley and Long); Ex. 1003 ¶¶ 41, 76. Patent Owner does not oppose this aspect of the Petition. *See, e.g.*, Prelim. Resp. 36, 39 (discussing the "database" limitations of claim 1). Based on this record, we conclude Petitioner's foregoing reliance on Kenley is sufficiently supported by the evidence of record to justify institution of review. *See* Ex. 1014, 2:6–14, 3:17–28, 6:35–40, 8:26–29 (Fig. 1B); Ex. 1003 ¶¶ 41, 76.

(b) Long Versus Claim 1

Petitioner relies on Long as disclosing a method for archiving data using a process that includes all the steps of claim 1, except: (1) Long archives *storage devices* (e.g., hard disks) rather than *files* as claimed; and (2) Long utilizes *audit headers* to track where the archived data is stored, rather than a *database* as claimed. *See* Pet. 19–25 (discussing combination of Kenley and Long), 25–36 (mapping the method steps of limitations [1.2]–[1.10] to Long); Ex. 1003 ¶¶ 49–95.

Patent Owner does not oppose these contentions at the present time. *See* Prelim. Resp. 15–39.

We conclude Petitioner's foregoing reliance on Long is supported sufficiently by the evidence of record to justify institution of review, as follows. We discuss steps [1.2]–[1.10] of claim 1 in the roughly chronological order they are performed by Long, which is different from the numerical order they are listed in the claim.

Per step [1.2], Long detects an instruction by an operating system to perform an operation on hard disk 24. In particular, Long's "[p]rocessing circuitry detects accesses to [hard disk 24] which would alter data thereon" (Ex. 1004, 1:62–66), and Long's audit subsystem monitors whether an application generates a request "to modify the contents of" hard disk 24 in order to initiate an archiving action in response to such a request (*id.* at 7:28–58). *See* Pet. 26–28; Ex. 1003 ¶ 60.

Per step [1.3], Long creates an archive of the hard disk data to be modified, and stores the archived hard disk data in a temporary first storage location temporally proximate to the hard disk modification, responsive to detecting the instruction in step [1.2]. In particular, Long's audit subsystem,

in response to detecting an application's request to modify the contents of hard disk 24, copies the hard disk data to be modified to a semiconductor memory buffer. *See* Ex. 1004, 7:28–46, 7:54–58; Pet. 28–31; Ex. 1003 ¶ 63.

Per step [1.6], after Long stores the archived hard disk data in the temporary first storage location (i.e., the semiconductor memory buffer), Long updates audit header 28 to indicate that the archived hard disk data is located in the first temporary storage location, as Dr. Maier explains. *See* Ex. 1003 ¶ 77 (discussing Ex. 1004, 2:5–8, 4:44–47, 4:57–60, 4:61–5:24 (Table 1), 7:47–53, 7:59–68); Pet. 36–38.

Per step [1.4], Long searches the first temporary storage location (i.e., the semiconductor memory buffer) for the archived hard disk data, responsive to the occurrence of a first event. In particular, in Long the first event can correspond to either "[w]hen the memory buffer is full" (Ex. 1004, 7:47) or when "the processing unit 14 requires memory used in the memory buffer for another purpose" (*id.* at 7:47–49), either of which event causes the audit subsystem to "write[] the data stored in the memory buffer to" audit buffer 30 of audit partition region 26 on hard disk 24 (*id.* at 7:49–53). *See* Pet. 31–32; Ex. 1003 ¶ 66. Dr. Maier correspondingly testifies that: "To flush or move the memory buffer['s] data, the system must search the memory buffer for the data to locate the data; absent such searching, the system would neither know what it is moving nor when the move has completed." Ex. 1003 ¶ 66; *see also* Ex. 1004, 8:20–23 ("When another part of the computer system 10 needs to write data to the hard disk, it will flush the memory buffer that contains the audit markers to the physical disk."). Further according to Dr. Maier, Long performs the searching of step [1.4] in an additional way, in that Long stores audit markers 32 in the memory

buffer, and then searches those audit markers in order to determine the location of audit markers 32 in audit buffer 30 of audit partition region 26 on hard disk 24. *See* Ex. 1003 ¶¶ 67–68 (citing Ex. 1004, Fig. 3, 5:22–24, 5:30–34, 5:54–59, 7:59–8:13); Pet. 32–33.

Per step [1.8], Long moves the archived hard disk data from the first temporary storage location (i.e., the semiconductor memory buffer) to an intermediate storage location, that is, to audit buffer 30 of audit partition region 26 on hard disk 24. *See* Ex. 1004, 7:47–53; Pet. 40–42; Ex. 1003 ¶¶ 85–86.

Per step [1.9], Long updates audit header 28 to indicate the archived hard disk data is located in the intermediate storage location (i.e., audit buffer 30). *See* Ex. 1004, 7:47–53; Pet. 42–43; Ex. 1003 ¶ 89.

Per step [1.7], Long determines a final destination for the archived hard disk data. In particular, Long determines "a removeable media, such as a floppy disk" for storing the archived hard disk data (Ex. 1004, 7:12–14, 8:32–33), which involves ensuring that the removeable archive media is appropriately mounted within the system and is not yet full (*see id.* at 8:50–63). *See* Pet. 39–40; Ex. 1003 ¶¶ 83–84.

Per step [1.5], Long moves the archived hard disk data from the intermediate storage location (i.e., audit buffer 30) to a second storage location (i.e., the removeable media), responsive to a second event. In particular, in Long the second event can correspond to either the audit buffer reaching a predefined percentage of its storage capacity (*see* Ex. 1004, 7:18–27, 7:50–52), or expiration of a predetermined time interval such as every five seconds (*see id.* at 8:36–37). *See* Pet. 34; Ex. 1003 ¶ 72. The combination of those events causes the audit subsystem to "store[] overflow

information from the audit partition onto a removeable media." Ex. 1004, 7:12–14, 8:29–9:9; *see* Pet. 34–35; Ex. 1003 ¶¶ 72–73. Further, Long's second storage location (i.e., the removeable media) is a permanent storage location, "because it is a persistent 'archive media for external storage.'" Pet. 34 (quoting Ex. 1004, 8:33); Ex. 1003 ¶ 72.

Per step [1.10], after moving the archived hard disk data to the second storage location (i.e., the removeable media), Long updates audit header 28 to indicate the archived hard disk data is located in the second storage location. *See* Ex. 1004, 9:7–9, Fig. 6 (step 70); Pet. 44–46; Ex. 1003 ¶¶ 92–93.

(c) Motivation to Archive Files (per Kenley) Temporally Proximate to Modifications (per Long)

Petitioner contends a person of ordinary skill in the art "would have been motivated, with a reasonable expectation of success to implement Kenley's file-based backup system with the modification-driven archival approach taught by Long, to improve reliability and provide other benefits to the system." Pet. 19, 24–25; Ex. 1003 ¶¶ 49, 57. Dr. Maier testifies in support that Kenley's incremental archiving technique beneficially stores "only '[a] copy of . . . specified files of data that has been modified since a specified date, usually the date of the last full or incremental backup.'" Ex. 1003 ¶ 50 (quoting Ex. 1014, 7:19–30) (citing Ex. 1014, 5:3–6, 12:66–13:17); *see* Pet. 19. Dr. Maier further testifies that Long's archiving technique beneficially provides "increased reliability by creating backup data after each modification [of a hard disk], thus avoiding the potential loss of data created in between the timed backups of Kenley and other incremental backup systems" due to power outages or operator error.

Ex. 1003 ¶ 50 (citing Ex. 1004, 1:46–55, 1:62–65, 4:23–27); *see* Pet. 19. According to Dr. Maier, these respective teachings of Kenley and Long would have motivated a person of ordinary skill in the art "to incorporate Long's technique of backing up data upon modification into a file-based backup system such as Kenley because the Long technique further increases the reliability of file backup, as there is no delay between modification and backup." Ex. 1003 ¶¶ 50, 52 (citing Ex. 1014, 2:26–30, 2:33–36, 3:1–47; Ex. 1004, 1:2–3, 1:62–64, 2:13–14); *see* Pet. 19–20. This combination further allegedly "serves the goal of 'reduc[ing] the time associated with conventional data migration schemes' taught by Kenley, which is consistent with the goal of providing an 'efficient, reliable and cost[-]effective architecture for disk fault tolerance' taught by Long." Ex. 1003 ¶ 50.

Dr. Maier moreover opines that a person of ordinary skill in the art "would have known that Long is applicable to [archiving] files" despite Long's focus on archiving hard disk data generally rather than files specifically. Ex. 1003 ¶ 53 (citing Ex. 1004, 1:46–48, 4:23–25, 7:28–29); *see* Pet. 20–21. Dr. Maier testifies that "data on a hard disk was most commonly organized as files to facilitate data access using a file system." Ex. 1003 ¶ 53 (citing Ex. 1013[2], 5:18–51; Ex. 1012[3], 1:26–60; Ex. 1010[4], 1:40–43). Dr. Maier adds: "As Kenley explains, 'stor[ing] data organized as files' and using file attributes to track the backup location of files enables the data to be more easily and transparently recovered from archive storage media for use by an application." *Id.* (citing Ex. 1014, 3:29–32, 7:19–62).

---

[2] U.S. Patent No. 5,745,313 to Sliger (issued Apr. 28, 1998).

[3] U.S. Patent No. 5,485,606 to Midgdey et al. (issued Jan. 16, 1996).

[4] U.S. Patent No. 5,860,124 to Matthews et al. (issued Jan. 12, 1999).

Dr. Maier further concludes a person of ordinary skill in the art would have achieved the proposed combination of Kenley and Long with a reasonable expectation of success. *See* Ex. 1003 ¶¶ 56–57 (citing Ex. 1004, 11:54–56; Ex. 1016[5], Fig. 38, 6:33–36, 46:25–26, 46:36–47:9); Pet. 23–24.

Patent Owner argues Petitioner's asserted motivations to combine are fatally unclear. *See* Prelim. Resp. 31–39. For example, Patent Owner suggests Petitioner fails to identify which reference (Kenley or Long) is the primary reference being modified in view of the other, and Petitioner never "proposed plausible specific modifications as required, and instead relies [improperly] on generic statements." *Id.* at 31–32. Patent Owner also argues Petitioner has not established Kenley and Long combine to teach every limitation of claim 1. *See id.* at 38–39.

However, as can be discerned from our summary of Petitioner's arguments comparing Kenley and Long to the invention recited in claim 1 (in Sections III.D.3(a) and III.D.3(b) above), and positing motivations to combine the references (in this Section III.D.3(c) above), we do not agree with Patent Owner. We conclude Petitioner sufficiently maps claim 1 to the disclosures of Kenley and Long, and articulates sufficient motivations to combine Kenley and Long, to justify institution of review.

Patent Owner next argues and Mr. Jawadi testifies that Long's archiving technique is limited to archiving hard drives, and a person of ordinary skill in the art would have understood that hard drive archiving techniques are not applicable to file archiving techniques. *See* Prelim. Resp. 10–11, 16–19; *id.* at 16 ("While Kenley and Long each discuss

[5] U.S. Patent No. 6,016,553 to Schneider et al. (issued Jan. 18, 2000).

techniques that relate generally to the handling of data, the types of techniques relied on by each (which are still in use today) have long been recognized to be largely mutually exclusive and incompatible."); Ex. 2001 ¶¶ 76–126 (comparing and contrasting *sector*-based archiving solutions and *file*-based archiving solutions). In support, Patent Owner emphasizes that "file systems and physical disks/sectors exist at separate conceptual levels in data storage systems, with hardware agnostic file systems built on top of hardware specific physical disk/sector drivers." Prelim. Resp. 17–18 (citing Ex. 1014, 5:16–20); Ex. 2001 ¶¶ 90–126. Patent Owner asserts Petitioner Microsoft has "confirmed this distinction." Prelim. Resp. 18 (citing Ex. 2014[6] ¶ 33); Ex. 2001 ¶ 93.

Thus, according to Patent Owner and Mr. Jawadi, a person of ordinary skill in the art would not have been motivated to combine Kenley and Long in the fashion proposed by Petitioner and Dr. Maier, with a reasonable expectation of success. *See* Prelim. Resp. 19–39; Ex. 2001 ¶¶ 127–167 (testifying that Long's *sector*-based process is not applicable to Kenley's *file*-based process). Indeed, according to Patent Owner and Mr. Jawadi, Long "teaches that error detection and containment should be 'confined at the lowest possible level'" and "[t]he low (near the hardware) level implementation of Long could not (and would not need to) even recognize the concept of files," so Long teaches away from Petitioner's posited combination. Prelim. Resp. 11; *id.* at 17, 19–22 (citing Ex. 1004, 1:65–2:2, 3:1–50, 6:59–63); Ex. 2001 ¶¶ 128–165, 183–187. In particular, Mr. Jawadi indicates that implementing Long's "disk/sector level methods" into

[6] U.S. Patent App. Pub. No. 2009/0254594 A1 to Burchall (published Oct. 8, 2009).

Kenley's file archiving "would destroy the file system's ability to remain hardware agnostic." Prelim. Resp. 21; Ex. 2001 ¶¶ 90–94, 111, 161. Patent Owner and Mr. Jawadi assert these arguments are supported by Schneider. *See* Prelim. Resp. 22–24 (citing Ex. 1020, 2:23–3:2, 5:8–16, 6:1–7, 14:4–9); Ex. 2001 ¶¶ 168–181, 227–242, 318–319. Patent Owner asserts Petitioner Microsoft's own published patent application supports this position. *See* Prelim. Resp. 19, 24–25 (citing Ex. 2016[7], ¶¶ 1–2, 4–5, 13, claim 12); Ex. 2001 ¶¶ 270–275.

Patent Owner and Mr. Jawadi moreover maintain that Petitioner's combination of Kenley and Long would improperly change Kenley's principle of operation. *See* Prelim. Resp. 29–31; Ex. 2001 ¶¶ 183–186, 195–199. In particular, Patent Owner argues "Long's 'event-driven backup process' cannot be moved to a file system level implementation [such as Kenley's] without changing the principle of operation" because Long's process detects "writes to the hard disk(s), power failure, power on and system reboot," all of which "occur at a level well below what a file system implementation could detect" and "cannot reasonably be implemented at a file system level without changing the principle of operation of a file system and incorporating all lower level logic into the higher data layer (thus negating one of the foundational principles of data storage systems)." Prelim Resp. 30 (citing Ex. 1004, 5:26–30); Ex. 2001 ¶¶ 183–199.

Patent Owner and Mr. Jawadi finally dispute any reasonable expectation of success in Petitioner's proposed combination, based on

[7] U.S. Patent App. Pub. No. 2007/0226436 A1 to Cheng et al. (published Sept. 27, 2007).

similar considerations to arguments summarized above. *See* Prelim. Resp. 25–29; Ex. 2001 ¶¶ 183–199.

We conclude Petitioner has explained with supporting evidence how the combination of Kenley and Long would have motivated a person of ordinary skill in the art to practice the invention of claim 1 with a reasonable expectation of success and without hindsight, sufficiently to justify institution of review. In particular, on this record, we conclude a person of ordinary skill in the art would have been motivated to modify Kenley's process of backing up *files*, by *triggering the creation of an archive file whenever a file is modified* using *three successive backup memories* per the teachings of Long. *See* Pet. 19, 24–25. Dr. Maier testifies in support that this would have been done to improve the reliability of Kenley's file archiving process, by avoiding the potential loss of data created in between Kenley's archiving of files at predetermined time intervals. *See* Pet. 19–21, 24–25; Ex. 1003 ¶¶ 49–50, 52–53, 58. Patent Owner does not materially dispute the increased reliability benefits achieved by modifying Kenley's file-based backup process in this fashion, in the present preliminary record.

Instead, Patent Owner pre-supposes that Petitioner's case for obviousness is premised on the bodily incorporation of Long's sector-based archiving process into Kenley's file-based archiving process. However, that is not what Petitioner proposes, as summarized in detail above. Moreover, the test for obviousness is not whether the features of one reference (such as Long) may be bodily incorporated into the structure or process of the other reference (such as Kenley), but rather is "what the combined teachings of the references would have suggested to those of ordinary skill in the art." *In re Keller*, 642 F.2d 413, 425 (CCPA 1981). Further, "[a] person of ordinary

skill is also a person of ordinary creativity, not an automaton," and "in many cases a person of ordinary skill will be able to fit the teachings of multiple patents together like pieces of a puzzle." *KSR*, 550 U.S. at 420–21. On the present record, we discern no reason why a person of ordinary skill in the art would have been deterred from modifying Kenley's file archiving process to be triggered whenever a file is modified and to use three successive backup memories per the teachings of Long, or would not have expected success in doing so.

Patent Owner's reliance on various patent applications filed by Petitioner Microsoft is not to the contrary. Those patent applications establish, at best for Patent Owner, that processing data at the file level (such as in Kenley) involves many different considerations than those involved in processing data at the sector level (as in Long). *See* Ex. 2014 ¶ 33; Ex. 2016 ¶¶ 1–2, 4–5, 13, claim 12; Prelim. Resp. 17–18, 19, 24–25. However, neither Patent Owner nor Mr. Jawadi explains in the present record why such differences would have deterred a person of ordinary skill in the art from changing the timing of Kenley's file archiving process, by triggering the creation of an archive file whenever a file is modified per the teachings of Long. Indeed, one of the Microsoft patent applications cited by Patent Owner is directed to a file-based backup process, and discusses benefits obtained by file-based backup processes versus sector-based backup processes. *See* Ex. 2016 ¶¶ 1, 13.

Patent Owner's reliance on Schneider (which is part of Ground Two but not Ground One) as allegedly teaching away from Petitioner's combination of Kenley and Long is similarly unavailing in the present record. As an initial matter, Patent Owner has not cited any legal authority

for the underlying proposition that obviousness may be defeated by a reference (here, Schneider) teaching way from a challenger's combination of references (here, Kenley and Long), where the allegedly teaching away reference is not part of the challenger's combination. *See, e.g.*, Prelim. Resp. 22–24. We are not aware of any such authority.

Even considering the merits of Patent Owner's reliance on Schneider as teaching away as being pertinent to Petitioner's Ground One, we find on the present record that Schneider discusses various differences between file-based backup processes and sector-based backup processes, including some pros and cons of each approach. *See* Ex. 1020, 2:23–3:2, 5:8–16, 6:1–7, 6:18–22, 14:4–9, 24:20–27; Prelim. Resp. 22–24. For example, a sector-based backup is faster and requires less administration than a file-based backup (*see* Ex. 1020, 2:22–28, 6:18–22, 24:20–22), whereas a file-based backup can be restored more efficiently than a sector-based backup (*see id.* at 2:28–3:2). We conclude on the present record that Schneider does not criticize, discredit, or otherwise discourage file-based backup processes, as is required for a teaching away. *See In re Fulton*, 391 F.3d 1195, 1201 (Fed. Cir. 2004). Indeed, Schneider expressly recognizes that its methods may be used in connection with file-based backup processes. *See* Ex. 1020, 11:4–5 ("[T]he present invention can also be implemented as part of the operating system."), 24:1–19 ("The present invention can be implemented either at the sector (disk) level or as part of an operating system's filing system at the file level.").

For the foregoing reasons, we conclude Petitioner has explained with supporting evidence how the combination of Kenley and Long would have motivated a person of ordinary skill in the art to practice the invention of

claim 1 with a reasonable expectation of success and without hindsight, sufficiently to justify institution of review.

(d) Motivation to Store Archive Catalogs in a Database (per Kenley)

Petitioner contends a person of ordinary skill in the art would have been motivated, with a reasonable expectation of success, to "[m]aintain relevant audit header information, as taught by Long, in a backup catalog in a relational *database*, as taught by Kenley." Pet. 25 (emphasis added); Ex. 1003 ¶ 58. In support, Petitioner asserts and Dr. Maier testifies that "Kenley's teaching of a database-held system catalog that 'stor[es] and provid[es] transparent access to catalogued file attribute data' dovetails with Long's teachings on an audit header for similarly maintaining data on the current location of backup copies of data." Pet. 22, 36–38, 42–46 (quoting Ex. 1014, 3:17–28) (citing Ex. 1014, 2:6–14, 3:25–28, 6:35–40, 8:26–29, 10:43–52; Ex. 1004, Figs. 5 and 6, 2:5–8, 4:44–47, 4:57–5:24, 7:47–53, 7:59–68, 9:7–9; Ex. 1001, 6:24–27); Ex. 1003 ¶¶ 55, 76–80, 89–95.

Patent Owner responds that Petitioner "once again ignores the details of the two references: Kenley's system catalog relies on 'file attribute data' which would not be available to Long (which operates below the file system level), and Long's audit headers are specifically used to store disk sector information which would be useless at the higher level of the data system addressed by Kenley." Prelim. Resp. 36 (citing Ex. 1004, 5:1–25 (part of Table 1); Ex. 1014, 3:17–28); Ex. 2001 ¶¶ 287–289.

We conclude Petitioner has explained with supporting evidence how the combination of Kenley and Long would have motivated a person of ordinary skill in the art to practice the invention of claim 1 with a reasonable

expectation of success and without hindsight, sufficiently to justify institution of review. In particular, on this record, we conclude a person of ordinary skill in the art would have been motivated to utilize Kenley's database catalog of archived file storage locations rather than Long's audit header catalog of archived data, because Kenley's database provides transparent access to the cataloged information, independently of where the archived files are stored. *See* Pet. 22–23, 25, 36, 38, 43–46; Ex. 1003 ¶¶ 55, 58, 76, 78, 90, 93–94.

Patent Owner's present opposition is unavailing, because "[n]on-obviousness cannot be established by attacking references individually where the [unpatentability] is based upon the teachings of a combination of references." *In re Merck & Co.*, 800 F.2d 1091, 1097 (Fed. Cir. 1986); *see also Fleming v. Cirrus Design Corp.*, 28 F.4th 1214, 1222 (Fed. Cir. 2022) ("That the proposed *combination* of James and POH — rather than one of the individual references — discloses the disputed claim limitations does not defeat the Board's conclusion of obviousness."). Here, as discussed above, unpatentability is demonstrated by the combination of Kenley's database catalog of archived file storage locations with Long's three successive backup memories for archiving data, despite that Long's backup process is sector-based rather than file-based.

For the foregoing reasons, we conclude Petitioner has explained with supporting evidence how the combination of Kenley and Long would have motivated a person of ordinary skill in the art to practice the invention of claim 1 with a reasonable expectation of success and without hindsight, sufficiently to justify institution of review.

(e) Conclusion Regarding Claim 1

Based on the present record, we conclude Petitioner has provided sufficient argument and evidence in relation to the proposed obviousness of claim 1 over Kenley and Long, to demonstrate a reasonable likelihood that Petitioner would prevail with respect to this challenge at trial.

4. Claims 2–6 and 8–11

Petitioner provides arguments and evidence in support of its contentions that claims 2–6 and 8–11 are unpatentable as having been obvious over Kenley and Long. *See* Pet. 46–57; Ex. 1003 ¶¶ 96–118.

"When instituting *inter partes* review, the Board will authorize the review to proceed on all of the challenged claims and on all grounds of unpatentability asserted for each claim." 37 C.F.R. § 42.108(a). Thus, pursuant to USPTO rules and policy implementing *SAS Inst., Inc. v. Iancu*, 138 S. Ct. 1348 (2018), we "either (1) institute as to all claims challenged in the petition and on all grounds in the petition, or (2) institute on no claims and deny institution." Patent Trial and Appeal Board Consolidated Trial Practice Guide ("CTPG") 5–6, 64 (Nov. 2019).[8] We "will not institute on fewer than all claims or all challenges in a petition." *Id.* at 5, 64; *see also PGS Geophysical AS v. Iancu*, 891 F.3d 1354, 1359–60 (Fed. Cir. 2018) (stating a decision to institute is "a simple yes-or-no institution choice respecting a petition, embracing all challenges included in the petition").

Therefore, because we have decided to grant institution on Ground One against claim 1 (*see supra* Section III.D.3), we do the same for the other challenged claims in Ground One. *See* 37 C.F.R. § 42.108(a);

[8] *Available at* https://www.uspto.gov/TrialPracticeGuideConsolidated.

CTPG 5–6, 64. We note further that Patent Owner does not address these other claims apart from arguments we have already considered above in connection with claim 1, so there is nothing further for us to address with respect to these other claims at this time. *See* CTPG 5–6, 64.

E. Ground Two — Obviousness over Cabrera, Schneider, and Whiting

In Ground Two, Petitioner asserts claims 1–6 and 8–11 of the ’478 patent are unpatentable as having been obvious over Cabrera, Schneider, and Whiting. *See* Pet. 2, 57–79. Patent Owner disagrees. *See* Prelim. Resp. 11–13, 39–63.

As discussed above, because we have decided to grant institution on Ground One, we do the same for Ground Two. *See supra* Section III.D.4; 37 C.F.R. § 42.108(a); CTPG 5–6, 64. Nonetheless, we will address Patent Owner’s arguments concerning Ground Two separately from Ground One, using claim 1 as illustrative of all the challenged claims in this regard, to provide guidance to the parties for the upcoming trial. *See* CTPG 6, 64.

1. Overview of Petitioner’s Ground Two Challenge to Claim 1

Petitioner provides arguments and evidence in support of its contention that claim 1 is unpatentable as having been obvious over Cabrera, Schneider, and Whiting. *See* Pet. 57–74; Ex. 1003 ¶¶ 119–150.

Petitioner relies on Cabrera as disclosing a method for archiving files using a process that includes all the steps of claim 1, except: (1) creating an archive file from an operating file *responsive to detecting an instruction to perform an operation on the operating file*, per steps [1.2] and [1.3]; and (2) updating *a database to indicate where the archive file is located*, per steps [1.6], [1.9], and [1.10]. *See* Pet. 63–66 (discussing combination of

Cabrera, Schneider, and Whiting), 66–74 (mapping claim 1 to Cabrera, Schneider, and Whiting). Petitioner asserts a person of ordinary skill in the art would have been motivated, based on teachings in Schneider, to modify the process of Cabrera to trigger creating an archive file whenever the operating file is saved to a disk. *See* Pet. 63–64, 66–69; Ex. 1003 ¶¶ 133–134, 137–140, 142. Petitioner asserts a person of ordinary skill in the art also would have been motivated, based on teachings in Whiting, to modify the process of Cabrera-Schneider to update a database to indicate where the archive file is stored. *See* Pet. 65–66, 72, 74; Ex. 1003 ¶¶ 135, 146–147, 150.

2. Patent Owner's First Argument: Step [1.2]

Patent Owner argues Petitioner has failed to establish the combination of Cabrera, Schneider, and Whiting teaches step [1.2] — "detecting an instruction by an operating system to perform an operation on an operating file." *See* Prelim. Resp. 40.

Patent Owner asserts "Petitioner's mapping of Cabrera does not identify several of the claim features including but not limited to 'an operation on an operating file,' 'an instruction to perform an operation on an operating file,' or 'detecting an instruction to perform an operation on an operating file.'" *Id.* at 40–41 (citing Pet. 66–67; Ex. 1003 ¶ 137); Ex. 2001 ¶¶ 408–440. Patent Owner particularly asserts and Mr. Jawadi testifies that, in contrast to step [1.2], Cabrera "is directed towards an archive or backup operation performed only **after data** is present in a local storage area." Prelim. Resp. 41–43 (citing Ex. 1005, Fig. 2, 3:38–50, 6:58–62); Ex. 2001 ¶¶ 434–440.

Patent Owner then argues Schneider fails to cure the deficiency of Cabrera as to step [1.2]. *See* Prelim. Resp. 43. Patent Owner asserts and Mr. Jawadi testifies that "Schneider does not disclose 'detecting an instruction to perform an operation on an operating file' as Schneider is directed towards at best intercepting sector-based writes and such process is completed decoupled or independent from the operating system." *Id.* (citing Ex. 1020, 10:28–11:4, 30:4–11); Ex. 2001 ¶¶ 318–323. Further according to Patent Owner, "Petitioner's mapping of Schneider does not address several of the claim features including but not limited to the following features: 'detecting an instruction', 'operation', or 'an operating file.'" Prelim. Resp. 43–44 (citing Pet. 67). Patent Owner particularly asserts and Mr. Jawadi testifies that, in contrast to step [1.2], Schneider contains "no discussion of a file, but rather . . . is directed towards intercepting the write of a sector." *Id.* at 44–47 (citing Ex. 1020, Fig. 1, 6:18–22, 10:28–11:4, 11:30–12:8, 30:4–11); Ex. 2001 ¶¶ 313–317, 320–323, 335–391. Patent Owner adds that a person of ordinary skill in the art "would not have relied on or even considered Schneider, because Schneider teaches away from file-level implementations and because Schneider discloses sector-based (not file-based) interception," as discussed above in connection with Ground One. Prelim. Resp. 47.

We conclude Petitioner has explained with supporting evidence how the combination of Cabrera and Schneider teaches or suggests step [1.2], sufficiently to justify institution of review. In particular, Cabrera discloses a method for archiving *files* (specifically). *See* Ex. 1005, 1:7–9 ("This invention relates to systems and methods for transferring or archiving data from a local storage area to a remote storage area."), 9:44–10:10 ("[O]ne

example of a sparse file storage mechanism is provided" and illustrated in Figure 4 in relation to archiving a "data file"); Pet. 66–67; Ex. 1003 ¶¶ 136–137. Cabrera further indicates that its file archiving process may be triggered by "the accumulation of a given amount of data, the expirations of a given time delay, the receipt of a command to stage data, *or any other triggering event*." Ex. 1005, 10:56–61 (Fig. 5) (emphasis added); *see* Pet. 66–67; Ex. 1003 ¶ 137.

Schneider meanwhile discloses a method for saving and recovering data stored on a disk drive (*see* Ex. 1020, codes (54) and (57), 1:20–24) which "works by recording the original state of sectors on a disk prior to being changed" (*id.* at 12:1–2). "Thus, if a [hard drive] sector 10 contains value A, and a request to write a value B occurs, [Schneider's] method involves intercepting the write, reading the sector location 10 (picking up the A value), writing this original value into the circular history buffer, and then returning to complete the write of the new B value." *Id.* at 12:5–8, 30:4–11; *see* Pet. 67; Ex. 1003 ¶ 138.

Petitioner contends and Dr. Maier testifies that a person of ordinary skill in the art "would have been motivated to use detecting or intercepting 'a request to write' to disk as taught by Schneider as a triggering event" in Cabrera's file archiving process, "because doing so would enable the archiving system to 'maintain a complete history of the changes made to . . . a particular file.'" Pet. 67 (quoting Ex. 1005, 1:32–34); Ex. 1003 ¶ 139. It would further, according to Petitioner and Dr. Maier, "increase the reliability of backup and archiving by 'providing for a continuously running disk backup system' and 'eliminat[ing] the need to pause and make backups or decide which files should be backed up in the context of short term

information recovery.'" Pet. 67–68 (quoting Ex. 1020, 3:12–14, 5:24–26); Ex. 1003 ¶ 139.

Patent Owner's present opposition is unavailing, because, as we have already noted, "[n]on-obviousness cannot be established by attacking references individually where the [unpatentability] is based upon the teachings of a combination of references." *Merck*, 800 F.2d at 1097; *see Fleming*, 28 F.4th at 1222. As discussed above, unpatentability is demonstrated by the combination of Cabrera's file archiving process with Schneider's teachings as to triggering an archive process by a request to modify data stored on a hard drive. In other words, the combination leads to step [1.2], because it detects an instruction to modify a file as a trigger for archiving the file. The fact that Cabrera does not disclose triggering its file archiving process by detecting an instruction to modify the file does not detract, or teach away, from that conclusion, based on the present record. Further, as already mentioned above in connection with Ground One, although some of Schneider's disclosures focus on sector-based backup processes, Schneider expressly recognizes that its methods also may be used in connection with file-based backup processes. *See* Ex. 1020, 11:4–5, 24:1–19.

3. Patent Owner's Second Argument: Step [1.3]

Patent Owner argues Petitioner has failed to establish the combination of Cabrera, Schneider, and Whiting teaches step [1.3] — "creating an archive file from the operating file and storing the archive file in a temporary first storage location temporally proximate to the operation being performed

on the operating file and responsive to detecting the instruction." *See* Prelim. Resp. 48.

Patent Owner asserts "Petitioner's mapping of Cabrera does not address several of the claim features" such as "'creating an archive file from the operating file,' 'storing the archive file in a temporary first storage location,' wherein the features of 'creating' and 'storing' are 'temporally proximate to the operation being performed on the operating file,' and 'responsive to detecting the instruction.'" *Id.* at 48–49 (citing Pet. 68). Patent Owner argues and Mr. Jawadi testifies that Cabrera falls short of step [1.3], for the same reasons discussed above in connection with step [1.2]. *See id.* at 49–50; Ex. 2001 ¶¶ 434–447.

Patent Owner then argues and Mr. Jawadi testifies that Schneider fails to cure the deficiency of Cabrera as to step [1.3], because "Schneider does not disclose 'detecting an instruction by an operating system to perform an operation on an operating file' for reasons discussed above" in relation to step [1.2], "but instead teaches any sector-based interception of Schneider is uncoupled or independent from an operating system [operating on files] as it teaches a sector-based write." Prelim. Resp. 50 (citing Pet. 68–69; Ex. 1020, 10:28–11:4); Ex. 2001 ¶¶ 335–340, 390–391.

We conclude Petitioner has explained with supporting evidence how the combination of Cabrera and Schneider teaches or suggests step [1.3], sufficiently to justify institution of review, for the reasons provided above in Section III.E.2 in relation to step [1.2]. *See also* Pet. 68–69; Ex. 1003 ¶¶ 141–143.

4. Patent Owner's Third Argument: Step [1.4]

Patent Owner argues Petitioner has failed to establish the combination of Cabrera, Schneider, and Whiting teaches step [1.4] — "searching the first temporary storage location for the archive file responsive to the occurrence of a first event." *See* Prelim. Resp. 51–52.

Patent Owner asserts "Petitioner's mapping of Cabrera does not address several of the claim features including but not limited to 'searching the first temporary storage location', 'archive file' and 'responsive to the occurrence of a first event.'" *Id.* at 52 (citing Pet. 69–70). Patent Owner particularly asserts and Mr. Jawadi testifies that, in contrast to step [1.4], Cabrera initiates its archiving process when its temporary storage has stored a predetermined threshold amount of data, which "is not equivalent to" the "searching" being "responsive" to an event as recited in step [1.4]. *See id.* at 52–54 (citing Ex. 1005, 3:45–47, 11:16–31); Ex. 2001 ¶¶ 460–470.

We conclude Petitioner has explained with supporting evidence how the combination of Cabrera and Schneider teaches or suggests step [1.4], sufficiently to justify institution of review, for essentially the same reasons provided above in Section III.E.2 in relation to step [1.2]. Further concerning the "searching" requirement of step [1.4], Petitioner contends Cabrera correspondingly "teaches an 'event monitor 152' that 'may be implemented in a wide variety of ways' in order 'to watch for desired triggering events and to initiate appropriate action when the events occur'" including "determining 'whether more data should be appended to the staging file.'" Pet. 70 (quoting Ex. 1005, 13:1–10, 11:22–27). Petitioner concludes and Dr. Maier testifies that a person of ordinary skill in the art "would have understood that evaluating whether to append <u>more</u> data to the

staging file necessarily requires searching the staging area for the staging file, and that this searching step would occur responsive to the triggering event" which per Schneider's teachings is detecting an instruction to modify file data. *Id.*; Ex. 1003 ¶ 144. That is sufficient to justify institution of review.

5. Patent Owner's Fourth Argument: Motivation to Combine with Reasonable Expectation of Success

Patent Owner argues Petitioner has failed to establish a sufficient motivation to combine Cabrera, Schneider, and Whiting with a reasonable expectation of success, for three reasons. *See* Prelim. Resp. 55.

First, Patent Owner asserts Schneider teaches away from Petitioner's combination in that "Schneider discourages attempts to use file system level techniques over sector level techniques." *Id.* at 55–61 (citing Ex. 1020, 2:25–28, 6:18–22, 10:28–11:4, 13:14–17, 14:4–9, 19:9–11, 24:20–22); Ex. 2001 ¶¶ 304–334. Based on the present record, we do not agree, for reasons provided above in Section III.D.3(c) in the context of Ground One.

Second, Patent Owner asserts a person of ordinary skill in the art would have lacked a reasonable expectation of success in achieving Petitioner's proposed combination of Cabrera and Schneider, because "[Schneider's] teachings specific to a disk/sector level implementation could not be reasonably expected to succeed in [Cabrera's] file system level implementation (and vice versa) for similar reasons as discussed" in relation to Ground One's combination of Kenley and Long. Prelim. Resp. 61. Patent Owner adds that "Schneider confirms the difficulty and unlikelihood of success in making the proposed combination," because Schneider discusses how file-based and sector-based archiving processes "significantly

differ" and "Schneider does not propose any solutions to combine the two approaches, because Schneider itself recognizes how difficult (and unlikely to succeed) such modifications would be." *Id.* at 61–62 (citing Ex. 1020, code (57), 19:9–10, 24:20–21); Ex. 2001 ¶¶ 311–312, 317, 319, 323, 325, 327.

Based on the present record, we do not agree, for reasons similar to those provided above in Section III.D.3(c) in the context of Ground One, with Kenley being replaced by Cabrera (for using file-based archiving), and with Long being replaced by Schneider (for when to trigger the archiving process). Patent Owner's opposition as presently articulated is inapposite to Petitioner's combination of Cabrera and Schneider, because Patent Owner's arguments do not explain why it would have been beyond an ordinarily skilled artisan to modify Cabrera's file archiving process to be triggered whenever a file is modified per the teachings of Schneider, even if Schneider's teachings are provided in the context of a sector-based archiving process rather than a file-based archiving process.

Third, Patent Owner asserts "Petitioner's asserted motivations to combine the reference[s] are deficient," because "the Petition does not provide plausible specific modifications as required to meet [Petitioner's] burden, but instead at best relies on generic statements." Prelim. Resp. 62–63 (citing Pet. 67). We do not agree. Petitioner posits that a person of ordinary skill in the art would have been motivated to modify the file archiving process of Cabrera, by triggering the creation of an archive file whenever the operating file is modified, in order to maintain a complete history of the changes made to the operating file and increase the reliability of Cabrera's file archiving process, based on teachings in Schneider. *See,*

e.g., Pet. 63–64, 67–68. Petitioner also posits that a person of ordinary skill in the art would have been motivated to modify the file archiving process of Cabrera-Schneider, to utilize a database to indicate where the archive files are stored in order to facilitate transparent access to those files, based on cited teachings in Cabrera and Whiting. *See* Pet. 65–66, 72, 74; Ex. 1003 ¶¶ 135, 146–147, 150. Those contentions are sufficient to justify institution of review.

IV. DISCRETIONARY DENIAL UNDER 35 U.S.C. § 314

Petitioner contends we should not exercise our discretion under 35 U.S.C. § 314 to deny institution in deference to the two co-pending district court infringement litigations. *See* Pet. 3. In support, each Petitioner entity (Dropbox, Inc. and Microsoft Corporation) "stipulates that, if the Board institutes IPR, it will not pursue in its parallel district court proceeding the grounds raised, or which reasonably could have been raised, in" the Petition. *Id.* Petitioner asserts this stipulation means "the PTAB will not discretionarily deny institution in view of parallel district court litigation." *Id.* (quoting USPTO Memorandum, *Interim Procedure for Discretionary Denials in AIA Post-Grant Proceedings with Parallel District Court Litigation* (June 21, 2022) ("Guidance Memo")[9] at 3, 7).

Patent Owner does not address discretionary denial in its Preliminary Response.

[9] *Available at* https://www.uspto.gov/sites/default/files/documents/interim_proc_discretionary_denials_aia_parallel_district_court_litigation_memo_20220621_.pdf.

We conclude Petitioner's stipulation is commensurate in scope with a *Sotera* stipulation. *See Sotera Wireless, Inc. v. Masimo Corp.*, IPR2020-01019, Paper 12, at 13–14, 18–19 (PTAB Dec. 1, 2020) (precedential); Guidance Memo, at 3. The Guidance Memo states:

> Consistent with *Sotera Wireless, Inc.*, the PTAB will not discretionarily deny institution in view of parallel district court litigation where a petitioner presents a stipulation not to pursue in a parallel proceeding the same grounds or any grounds that could have reasonably been raised before the PTAB.

Guidance Memo, 3, 7–8. For this reason, we do not deny institution in view of the two co-pending district court infringement litigations.

V. CONCLUSION

For the above reasons, we determine the information presented in the record establishes there is a reasonable likelihood that Petitioner would prevail with respect to at least one claim of the '478 patent challenged in the Petition. We, therefore, institute an *inter partes* review of all challenged claims on all grounds presented in the Petition. *See* 35 U.S.C. § 314(a); 37 C.F.R. § 42.108(a).

At this preliminary stage, the Board has not made a final determination with respect to the patentability of the challenged claims or any underlying factual or legal issue. The Board's final determination will be based on the record as developed during the *inter partes* review. Any arguments not raised by Patent Owner in a timely-filed response may be deemed waived.

VI. ORDER

In consideration of the foregoing, it is hereby:

ORDERED that, pursuant to 35 U.S.C. § 314(a), an *inter partes* review is instituted for claims 1–6 and 8–11 of the ’478 patent on all grounds presented in the Petition; and

FURTHER ORDERED that pursuant to 35 U.S.C. § 314(c) and 37 C.F.R. § 42.4, notice is hereby given of the institution of a trial, which commences on the entry date of this decision.

FOR PETITIONER:

Andrew M. Mason
Cameron D. Clawson
Sarah E. Jelsema
Frank Morton-Park
KLARQUIST SPARKMAN LLP
andrew.mason@klarquist.com
cameron.clawson@klarquist.com
sarah.jelsema@klarquist.com
frank.morton-park@klarquist.com

FOR PATENT OWNER:

Rowan P. Smith
MESSNER REEVES LLP
rsmith@messner.com

Christopher L. Limbacher
HEIM, PAYNE & CHORUSH, LLP
climbacher@hpcllp.com