Trials@uspto.gov
571-272-7822

Paper 29
Date: April 25, 2025

UNITED STATES PATENT AND TRADEMARK OFFICE

BEFORE THE PATENT TRIAL AND APPEAL BOARD

DROPBOX, INC. and MICROSOFT CORPORATION,
Petitioner,

v.

DATANET, LLC,
Patent Owner.

IPR2024-00079
Patent 9,218,348 B2

Before JOSIAH C. COCKS, GEORGE R. HOSKINS, and
BACH V. HOANG, *Administrative Patent Judges*.

HOSKINS, *Administrative Patent Judge*.

JUDGMENT
Final Written Decision
Determining All Challenged Claims Unpatentable
35 U.S.C. § 318(a)

I. INTRODUCTION

Dropbox, Inc. and Microsoft Corporation (collectively, "Petitioner") filed a Petition (Paper 3, "Pet.") pursuant to 35 U.S.C. §§ 311–319 to institute an *inter partes* review of U.S. Patent No. 9,218,348 B2 (Ex. 1001, "the '348 patent"), claims 1–6, 8–20, and 23–31. We issued an Institution Decision (Paper 8, "Inst. Dec.") instituting the petitioned review.

Datanet, LLC ("Patent Owner") then filed a Patent Owner Response (Paper 17, "PO Resp.") to the Petition. Petitioner filed a Reply (Paper 20, "Pet. Reply") to the Patent Owner Response. Patent Owner filed a Sur-reply (Paper 22, "PO Sur-reply") to the Reply.

An oral hearing was held on February 13, 2025. A transcript of the hearing is in the record (Paper 28, "Tr.").

We have jurisdiction under 35 U.S.C. § 6(b)(4) and § 318(a). This Decision is a final written decision under 35 U.S.C. § 318(a) and 37 C.F.R. § 42.73 as to the patentability of claims 1–6, 8–20, and 23–31 of the '348 patent. We determine Petitioner has shown those claims are unpatentable by a preponderance of the evidence.

II. BACKGROUND

A. Real Parties-in-Interest and Related Proceedings

Petitioner identifies Dropbox, Inc. and Microsoft Corporation as its real parties-in-interest. *See* Pet. ix. Patent Owner identifies Datanet, LLC as its real party-in-interest. *See* Paper 13, 2.

The parties identify two district court litigations involving the '348 patent. *See* Pet. ix; Paper 13, 2. The first is *Datanet LLC v. Dropbox, Inc.*, No. 6:22-cv-01142 (W.D. Tex.), transferred to No. 3:24-cv-01972

(N.D. Cal.). The second is *Datanet LLC v. Microsoft Corporation*, No. 2:22-cv-01545 (W.D. Wash.). Both litigations have been stayed pending the present and related IPR reviews.

Petitioner has filed two related IPR petitions, to challenge a parent patent and a continuation patent of the ’348 patent. They are IPR2024-00078 challenging U.S. Patent No. 8,473,478 B2, and IPR2024-00080 challenging U.S. Patent No. 10,585,850 B2. *See* Pet. ix; Paper 13, 2.

The parties also identify a co-pending *ex parte* reexamination of the foregoing ’478 patent, Reexam Control No. 90/015,216, requested by Unified Patents, LLC. *See* Pet. ix; Paper 13, 3. In that reexam, on March 25, 2025, the Board issued a decision reversing an Examiner’s rejection of various claims in the ’478 patent (which were not amended during the reexam) as being unpatentable over different prior art references than the ones at issue here.

B. The ’348 Patent

The ’348 patent is titled “Automatic Real-Time File Management Method and Apparatus,” and relates to archiving computer files. *See* Ex. 1001, codes (54) and (57). Its archiving method “captures files just before and/or just after they have been changed to minimize loss of data between backup events.” *Id.* at 2:58–61.

Figure 1 of the ’348 patent, reproduced below (on the next page), is a block diagram of a computing device. *See id.* at 3:57–58, 5:1–2.

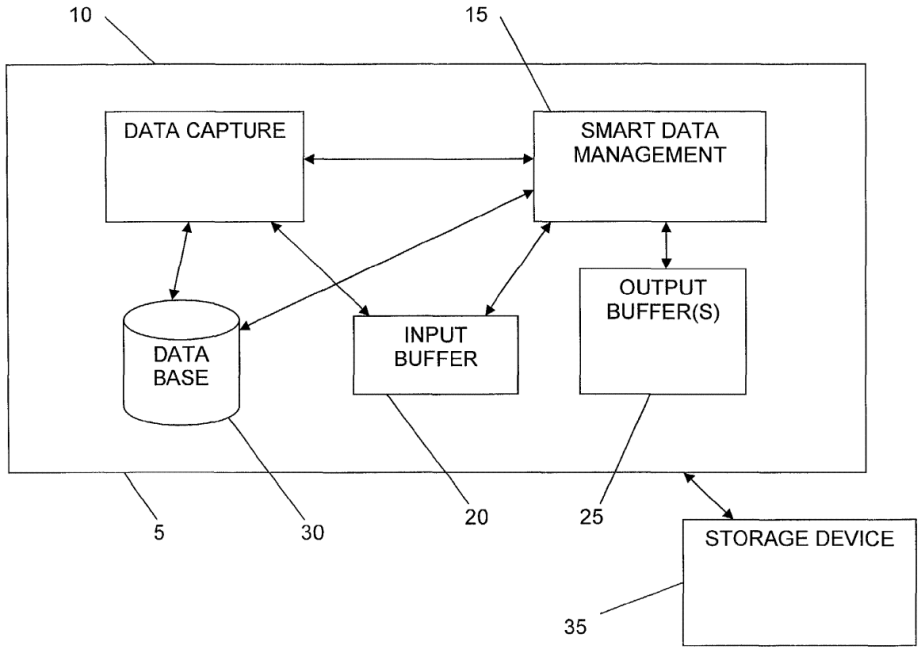

FIGURE 1

'348 Patent, Figure 1.

Figure 1 illustrates computing device 5 comprising file capture block 10, smart data management block 15, input buffer 20, one or more output buffers 25, and database 30. *See id.* at 5:1–5. Figure 1 also illustrates storage device 35 external to computing device 5. *See id.* at 5:5–7, 5:31–35.

"[F]ile capture block 10 detects an instruction to perform an operation on an operating file initiated by the resident program of computing device 5," and "the instant before and/or the instant after the operating file is changed, file capture block 10 captures the operating file or portions thereof." *Id.* at 5:9–17. Operations which might trigger this file capture include opening the file (*see id.* at 6:59–65), saving the file (*see id.* at 7:16–24), renaming the file (*see id.* at 7:33–37), and deleting the file (*see id.* at 7:62–8:1). The "[f]ile capture is . . . executed by creating an archive file from the operating file" and storing the archive file "in a temporary storage location . . . such as input buffer 20." *Id.* at 5:27–30.

"[S]mart data management block 15 manages the migration of the archive file from the input buffer 20 through the output buffers 25 to storage device 35." *Id.* at 5:36–39. Smart data manager 15 may migrate archive files from input buffer 20 to storage device 35 either synchronously or asynchronously with the file capture procedures of file capturer 10. *See id.* at 5:39–41. Thus, smart data manager 15 "regularly examines input buffer 20 for the presence of archive files . . . upon the occurrence of an event" such as receipt of a message from file capturer 10 or other programs on computing device 5, or expiration of a time interval. *Id.* at 5:44–51. "If archive files are detected" then "smart data manager 15 updates database 25 [sic '30'] to indicate the location of the archive files" as "resident in input buffer 20." *Id.* at 6:29–32.

Smart data manager 15 also "examine[s] database 30 to determine a defined storage location for each of the archive files stored in input buffer 20," and "moves the archive files to one or more output buffers 25," wherein each output buffer 25 corresponds to a particular final storage location. *Id.* at 5:51–62, 6:32–36. "[S]mart data manager 15 updates database 30 to indicate that the archive files are now stored in the output buffer [25]." *Id.* at 6:36–38.

Then: "Upon the occurrence of an event, and/or at defined time intervals, smart data management block 15 moves the archive files from the output buffers 25 to their respective storage device(s) 35." *Id.* at 5:63–66, 6:39–40. Such events can include receipt of a message concerning the status of storage device(s) 35 being ready for use, or expiration of a time interval. *See id.* at 5:66–6:7, 6:17–23. Smart data manager 15 further "updates

database 25 [sic '30'] to indicate that the archive files are stored in one or more storage devices 30 [sic '35']." *Id.* at 6:46–48.

C. The Claims of the '348 Patent

The '348 patent includes thirty-one claims. *See* Ex. 1001, 8:44–12:22. Claim 1 is illustrative, and it recites, with Petitioner's reference numbering added:

> [1.1] A method for archiving files, comprising steps of (a) to (i) following:
>
> [1.2] (a) the step of detecting an instruction by a resident program in a computing device for performing an operation on an operating file;
>
> [1.3] (b) the step of creating an archive file from the operating file and storing the archive file in a temporary storage location temporally proximate to the operation being performed on the operating file and responsive to detecting the instruction;
>
> [1.4] (c) the step of identifying presence of the archive file in the temporary storage location responsive to the occurrence of a first event;
>
> [1.5] (d) the step of transmitting the archive file to a second storage location responsive to a second event, the second storage location being an intermediate or a permanent storage location;
>
> [1.6] (e) after storing the archive file in the temporary storage location, updating a database to indicate that the archive file is located in the temporary storage location;
>
> [1.7] (f) determining a final destination for the archive file;
>
> [1.8] (g) moving the archive file from the temporary storage location to an intermediate storage location;
>
> [1.9] (h) updating the database to indicate the archive file is located in the intermediate storage location; and

> [1.10] (i) after moving the archive file to the second storage location, updating the database to indicate the archive file is located in the second storage location.

Ex. 1001, 8:45–9:5; *see* Pet. 6. Claims 2–7 depend from claim 1. *See* Ex. 1001, 9:6–19.

Claim 8 is an independent claim that recites limitations [1.1]–[1.6] of claim 1, then adds several limitations that differ from claim 1. *See id.* at 9:20–48. Claims 9–11 depend from claim 8. *See id.* at 9:49–54.

Claim 12 is an independent claim that recites limitations [1.1]–[1.5] of claim 1, then adds "wherein the second event includes a message indicating when the second storage location is available." *Id.* at 9:55–10:6.

Claim 13 is an independent claim that recites limitations [1.1]–[1.5] of claim 1, then adds "wherein the second event includes a message from a timer." *Id.* at 10:7–25.

Claim 14 is an independent claim that recites limitations [1.1]–[1.5] of claim 1, then adds "wherein the first event includes a message from a timer." *Id.* at 10:26–44.

Claim 15 is an independent claim that recites limitations [1.1]–[1.5] of claim 1, then adds "wherein the first event is different from the second event." *Id.* at 10:45–62. Claims 16–31 depend from claim 15. *See id.* at 10:63–12:22.

D. Asserted Prior Art

Petitioner's challenges rely on the following five references, listed in chronological order by issue or publication date. *See* Pet. 2.

Name	Reference	Date	Exhibit No.
Kenley	US 5,276,867	Jan. 4, 1994	1014
Long	US 5,325,519	June 28, 1994	1004
Whiting	US 5,778,395	July 7, 1998	1006
Schneider	WO 99/12101 A2	Mar. 11, 1999	1020
Cabrera	US 5,953,729	Sept. 14, 1999	1005

See Ex. 1004, code (45); Ex. 1005, code (45); Ex. 1006, code (45); Ex. 1014, code (45); Ex. 1020, code (43). Petitioner asserts these references are each prior art to the '348 patent, which Patent Owner does not dispute. *See* Pet. 7 & n.1 (Kenley), 8 (Long), 59 (Cabrera), 62 (Schneider), 62 (Whiting); PO Resp. *generally*.

E. Asserted Grounds

Petitioner asserts two grounds of unpatentability. *See* Pet. 2.

Ground	Claims Challenged	35 U.S.C. §[1]	References
1	1–6, 8–20, 23–31	103(a)	Kenley, Long[2]
2	1–6, 8–20, 23–31	103(a)	Cabrera, Schneider, Whiting

[1] The Leahy-Smith America Invents Act, Pub. L. No. 112-29, 125 Stat. 284 (2011) ("AIA") revised § 103, effective in March 2013. The '348 patent was filed in June 2013, but asserts continuation priority to a parent application filed in September 2001. *See* Ex. 1001, codes (22) and (63). Petitioner applies pre-AIA law (*see* Pet. 7 n.1), which Patent Owner has not opposed. Therefore we also apply the pre-AIA version of § 103.

[2] The Petition initially lists Long then Kenley (*see* Pet. 2), but the underlying analysis lists Kenley then Long (*see id.* at 7–40).

F. Testimonial Evidence

Petitioner relies on the proffered expert witness testimony of David Maier, Ph.D. (Exhibits 1003, 1024, 2022, and 2025). Patent Owner relies on the proffered expert witness testimony of Mr. Zaydoon ("Jay") Jawadi (Exhibits 1026, 2020, and 2021).[3]

III. PETITIONER'S GROUNDS OF UNPATENTABILITY

A. Legal Standards

1. Petitioner's Burden of Proof

"In an [*inter partes* review], the petitioner has the burden from the onset to show with particularity why the patent it challenges is unpatentable." *Harmonic Inc. v. Avid Tech., Inc.*, 815 F.3d 1356, 1363 (Fed. Cir. 2016) (citing 35 U.S.C. § 312(a)(3) (requiring *inter partes* review petitions to identify "with particularity . . . the evidence that supports the grounds for the challenge to each claim")). This burden of persuasion never shifts to the patent owner. *See Dynamic Drinkware, LLC v. Nat'l Graphics, Inc.*, 800 F.3d 1375, 1378 (Fed. Cir. 2015). The petitioner must prove unpatentability by a preponderance of the evidence. *See* 35 U.S.C. § 316(e); 37 C.F.R. § 42.1(d).

2. Law of Obviousness

A patent claim is unpatentable under 35 U.S.C. § 103 if the differences between the claimed subject matter and the prior art are such that the subject matter, as a whole, would have been obvious at the time the

[3] Patent Owner has withdrawn Exhibits 2001 and 2002 (Mr. Jawadi's Declaration and C.V. filed on Feb. 29, 2024). *See* PO Resp. iv, 4–5.

invention was made to a person having ordinary skill in the art to which said subject matter pertains. *KSR Int'l Co. v. Teleflex Inc.*, 550 U.S. 398, 406 (2007). The question of obviousness is resolved on the basis of underlying factual determinations including: (1) the scope and content of the prior art; (2) any differences between the claimed subject matter and the prior art; (3) the level of ordinary skill in the art; and (4) objective evidence of nonobviousness, if made available in the record, which has not happened here. *See Graham v. John Deere Co.*, 383 U.S. 1, 17–18 (1966).

B. Level of Ordinary Skill in the Art

The level of ordinary skill in the art is "a prism or lens" through which we view the prior art and the claimed invention. *Okajima v. Bourdeau*, 261 F.3d 1350, 1354–55 (Fed. Cir. 2001) (citing *Al-Site Corp. v. VSI Int'l, Inc.*, 174 F.3d 1308, 1324 (Fed. Cir. 1999)). "This reference point prevents . . . factfinders from using their own insight or, worse yet, hindsight, to gauge obviousness." *Id.* at 1355. "The person of ordinary skill in the art is a hypothetical person who is presumed to know the relevant art" at the time of the invention. *In re GPAC Inc.*, 57 F.3d 1573, 1579 (Fed. Cir. 1995). In finding the level of ordinary skill in the art, we may consider various factors, including: "(1) the educational level of the inventor; (2) type of problems encountered in the art; (3) prior art solutions to those problems; (4) rapidity with which innovations are made; (5) sophistication of the technology; and (6) educational level of active workers in the field." *Best Med. Int'l, Inc. v. Elekta Inc.*, 46 F.4th 1346, 1353 (Fed. Cir. 2022) (citations omitted).

Petitioner contends a person having ordinary skill in the art pertaining to the '348 patent "would have held a bachelor's degree in computer science,

electrical engineering, computer engineering, or a closely related field, and one or more years of experience in the design and development of file management, restoration, and archival systems," and "[m]ore education, e.g., a Master's or Ph.D., could substitute for less work experience and vice versa." Pet. 6–7; Ex. 1003 ¶¶ 29–31.

Patent Owner does not dispute Petitioner's formulation of ordinary skill. *See* PO Resp. 4; Ex. 2020 ¶¶ 37–39.

We adopt Petitioner's undisputed formulation of ordinary skill in the art, which appears to comport with the teachings of the '348 patent and the prior art of record. *See Okajima*, 261 F.3d at 1355.

C. Claim Construction

We interpret the '348 patent claims "using the same claim construction standard that would be used to construe the claim in a civil action under 35 U.S.C. 282(b)." 37 C.F.R. § 42.100(b). This "includ[es] construing the claim in accordance with the ordinary and customary meaning of such claim as understood by one of ordinary skill in the art and the prosecution history pertaining to the patent." *Id.*

We address the meaning of the limitation "identifying presence of the archive file in the temporary storage location," which is recited in each independent claim, below in Section III.D.3(a)(iv) as part of resolving the parties' dispute over Petitioner's application of Kenley and Long to representative claim 1.

Apart from that limitation, we determine no explicit construction of any claim term is needed to resolve the parties' controversy. *See Realtime Data, LLC v. Iancu*, 912 F.3d 1368, 1375 (Fed. Cir. 2019) ("The Board is

required to construe 'only those terms . . . that are in controversy, and only to the extent necessary to resolve the controversy.'") (quoting *Vivid Techs., Inc. v. Am. Sci. & Eng'g, Inc.*, 200 F.3d 795, 803 (Fed. Cir. 1999)).

D. Ground One — Asserted Obviousness over Kenley and Long

In Ground One, Petitioner asserts claims 1–6, 8–20, and 23–31 of the '348 patent are unpatentable as having been obvious over Kenley and Long. *See* Pet. 2, 7–59. Patent Owner disagrees. *See* PO Resp. 5–30.

We conclude a preponderance of the evidence supports Petitioner's assertions. We begin by summarizing Kenley and Long, then we consider the parties' opposing contentions.

1. Kenley

Kenley is titled "Digital Data Storage System with Improved Data Migration." Ex. 1014, code (54). Kenley provides "primary, secondary, and backing storage elements characterized by respectively longer access times" and greater storage capacities. *Id.* at code (57), 2:44–55.

Figure 1B of Kenley, reproduced below (on the next page), depicts a data storage and migration apparatus. *See id.* at 4:29–31.

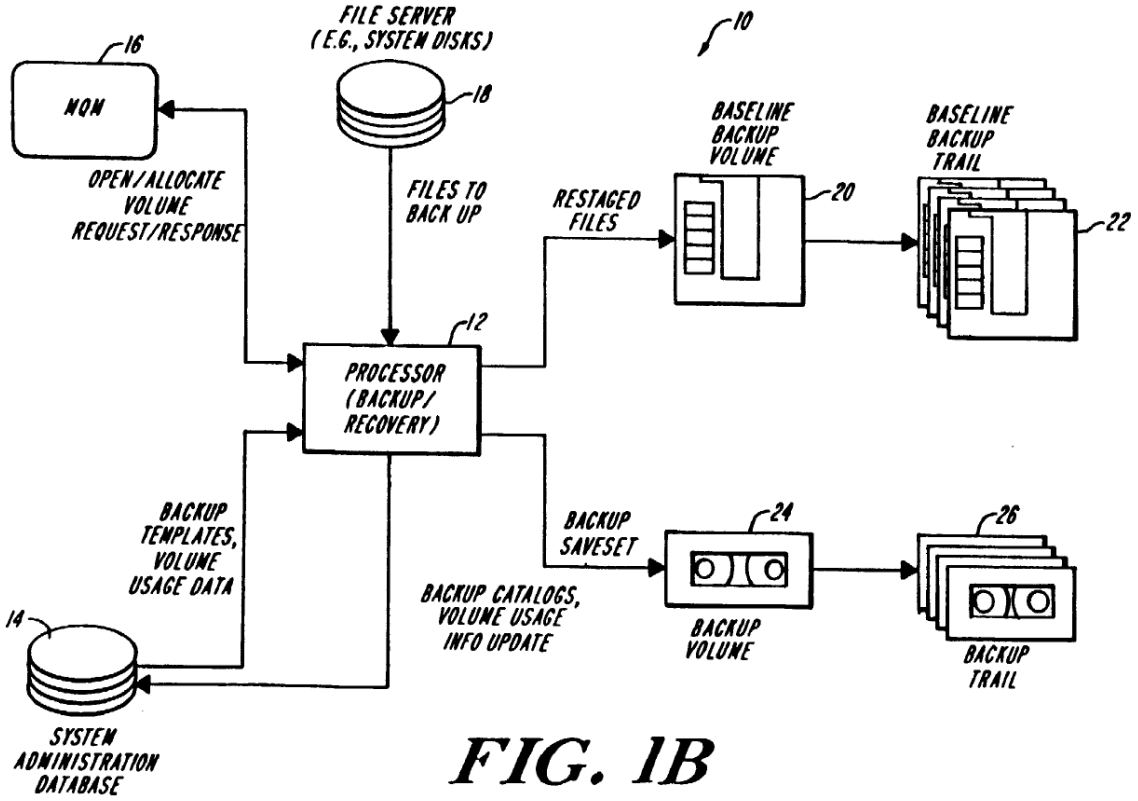

FIG. 1B

Kenley, Figure 1B.

Figure 1B illustrates data processing system 10 with backup storage. *See id.* at 6:29–31. Processor 12 backs up files stored on system disks 18, using baseline backup volume 20 (e.g., optical disk media) and full / incremental backup volume 24 (e.g., magnetic tape). *See id.* at 6:31–35, 6:44–56, 7:2–7.

To perform a baseline backup to volume 20, processor 12 scans the file directories of system disks 18 for files that need to be backed up, and copies those files to volume 20. *See id.* at 7:19–50, 8:43–65. Next: "A detection element compares the quantity of data stored in the secondary storage element [i.e., volume 20] to a selected fullness threshold, and generates a secondary-storage-full signal when the quantity of stored data exceeds the selected fullness threshold." *Id.* at 2:56–60. "A data migration element . . . automatically migrates data from secondary storage to backing

store [i.e., backup volume 24] at selected times, or in response to the secondary-storage-full signal." *Id.* at 2:60–3:16.

Processor 12 utilizes system administration database 14 to store "backup catalogs (i.e., lists of all files copied to specific backup savesets)," including all files backed up to volumes 20 and 24. *Id.* at 6:35–40, 8:26–29 (Fig. 1B). This "provid[es] transparent access to catalogued file attribute data representative of the attributes of the data files stored in the secondary storage element" and allows processor 12 to retrieve backed up files from volumes 20 and 24. *Id.* at 3:17–28, 10:34–68.

2. Long

Long is titled "Fault Tolerant Computer with Archival Rollback Capabilities." Ex. 1004, code (54). Long explains: "A *fault tolerant* architecture provides a system with redundant resources," so "[i]f one resource fails, another can be assigned in its place giving the ability to continue processing the application without disruption." *Id.* at 1:18–22 (emphasis added). Such systems correct system errors by restoring or "rolling back" the system to a previously stored correct state for continued operation. *See id.* at 1:30–38. Long focuses on implementing a fault tolerant storage medium, such as a hard disk. *See id.* at 1:46–64.

Figures 2a and 2b of Long are reproduced below (on the next page).

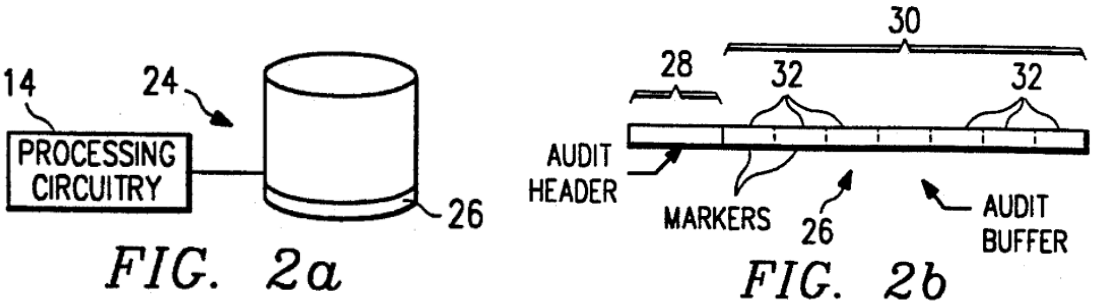

Long, Figures 2a and 2b.

Figure 2a is a diagrammatic view of processing unit 14 and an associated hard disk 24, wherein the hard disk includes audit partition region 26. *See id.* at 2:45–50 (Fig. 1), 4:28–39. Figure 2b is a diagrammatic view of partition region 26, made up of audit header 28 and audit buffer 30. *See id.* at 2:23–25, 4:40–44. "[A]udit header 28 contains information that is used to manage the audit buffer 30" and "archive media." *Id.* at 4:44–47. "[A]udit buffer 30 is used to record events such as writes to the hard disk(s), power failure, power on and system reboot" wherein "[e]ach event is captured in [an] audit marker [32]" which includes "[t]he data that was read from the hard disk." *Id.* at 5:26–35.

Figure 3 of Long illustrates one audit marker 32, and is reproduced below. *See id.* at 2:26, 4:49–51, 5:29–30.

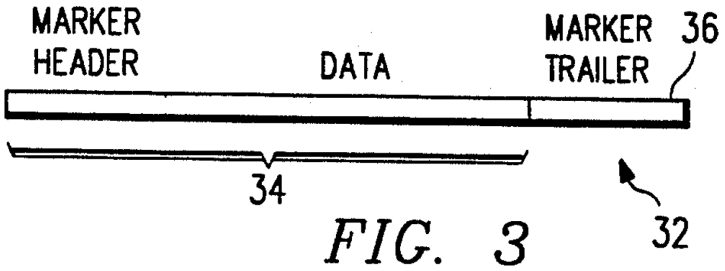

Long, Figure 3.

Figure 3 illustrates audit marker 32 comprising marker header 34 which is used to describe the type of event and to record the captured data (*see id.*

at 5:30–53), and marker trailer 36 which is used to access audit buffer 30 in reverse order (*see id.* at 5:30–31, 5:54–67).

Thus: "Processing circuitry detects accesses to [hard disk 24] which would alter data thereon, and stores the data to be altered in the audit partition region [26] for later restoration." *Id.* at 1:65–2:5. In particular, when an application sends a request to modify the contents of hard disk 24, an audit subsystem reads the data on the disk to be modified (i.e., before it is modified) and then appends the data "to a semiconductor memory buffer [(not shown in the Figures)] prior to writing the data to the audit partition [26] on the hard disk [24]," because writing to partition region 26 "is significantly slower" than writing to the semiconductor memory buffer. *Id.* at 7:28–46 (describing Fig. 5, steps 46, 48, 50, and 52), 7:54–58. "When the memory buffer is full . . . or the processing unit 14 requires memory used in the memory buffer for another purpose, the audit subsystem writes the data stored in the memory buffer to the end of the audit buffer 30 on [hard disk 24] and updates the audit header (in the memory buffer) to reflect the changes." *Id.* at 7:47–53 (describing Fig. 5, steps 54, 56, and 58).

Next, "[i]f the audit buffer [30 on hard disk 24] becomes full," an archive subsystem begins to "archive" audit buffer 30 to an "archive media" (not shown in the Figures) at predetermined intervals such as every five seconds. *Id.* at 8:29–9:7 (describing Fig. 6, steps 60, 62, 64, 66, and 68). The archive media is "a removable media, such as a floppy disk." *Id.* at 7:12–14, 8:29–33. "After the write is completed, the audit header in memory is modified to show the removal of the audit markers from the audit buffer 30." *Id.* at 9:7–9.

In this way: "In the event of a failure, the audit partition 26 and any archive media allow rollback of the state of the hard disk to a previous known state." *Id.* at 9:10–12.

3. Claim 1

Petitioner provides arguments and evidence in support of its contention that claim 1 is unpatentable as having been obvious over Kenley and Long. *See* Pet. 7–40; Ex. 1003 ¶¶ 40–95. Patent Owner opposes. *See* PO Resp. 5–30; Ex. 2020 ¶¶ 101–191.

In overview, Petitioner relies on Kenley as disclosing an archiving method that: (a) archives data organized as *files* per claim 1; and (b) employs a *database* per claim 1 to record various locations of archived files as they are migrated to permanent storage. *See, e.g.*, Pet. 13 ("A POSITA would have been motivated . . . to implement Kenley's file-based backup system . . . ."), 16 (referring to "Kenley's teaching of a database-held system catalog that 'stor[es] and provid[es] transparent access to catalogued file attribute data'" and "using the backup catalogs in the database to locate backup files"). Petitioner then contends it would have been obvious to combine Kenley and Long to practice the invention of claim 1, by: (a) archiving *files* as in Kenley rather than archiving *storage devices* (e.g., hard disk sectors) as in Long; and (b) employing a *database* as in Kenley rather than *audit headers* as in Long to record various locations of archived files as they are migrated to permanent storage. *See id.* at 13–18 (discussing combination of Kenley and Long), 19–40 (mapping the steps of claim 1 to Kenley and Long).

We discuss these two aspects (a) and (b) of Petitioner's contentions separately.

(a) Archiving Files (Per Kenley) Temporally Proximate to Modifying the Archived Data and Utilizing Three Successive Storage Locations (Per Long)

Petitioner relies on Kenley as disclosing a method for archiving "data organized as *files*." Pet. 8 (emphasis added), 13 (referring to "Kenley's file-based backup system"), 19–36 (referring repeatedly to "a file-based system such as Kenley's"). Petitioner relies on Long as disclosing a method for archiving data embodying all the steps of claim 1, including beginning the archive temporally proximate to modifying the archived data and utilizing three successive storage locations to migrate the archived data to a permanent storage location, except Long archives *storage devices* (e.g., hard disk sectors) rather than *files* as claimed.[4] *See id.* at 13–18 (discussing combination of Kenley and Long), 19–40 (mapping the method steps of limitations [1.2]–[1.10] to Long); Pet. Reply 2.

Patent Owner disputes Petitioner's combination of Kenley and Long, raising several arguments that we discuss below. *See* PO Resp. 5–15, 27–30; Ex. 2020 ¶¶ 101–165.

We conclude a preponderance of the evidence supports Petitioner's contention that a person of ordinary skill would have been motivated to combine Kenley and Long to perform the archiving method of claim 1, with a reasonable expectation of success. We discuss the steps of claim 1 in the

[4] As mentioned above, Petitioner also relies on Kenley for using the claimed *database* to record the various locations of the archived files as they are migrated, as we discuss below in Section III.D.3(b).

roughly chronological order they are performed by Long, which differs from the alphabetical order they are listed in the claim.

(i) Step [1.1] Preamble — A Method for Archiving Files

Step [1.1], the preamble of claim 1, recites: "A method for archiving files, comprising steps" recited in the remainder of claim 1. Ex. 1001, 8:45–46.

Petitioner argues Kenley and Long both disclose methods for archiving data, and Kenley further archives *files* as recited in the claim preamble, if it is limiting. *See, e.g.*, Pet. 8, 13, 19 (citing Ex. 1004, Figs. 4–6, 2:28–33, 12:19–37; Ex. 1014, 2:44–55, 3:1–4, 3:29–30, 4:54–66); Ex. 1003 ¶¶ 40–41, 49, 59.

Patent Owner does not dispute those arguments. *See* PO Resp. 6–27 (Patent Owner's argument opposing Petitioner's reliance on Kenley and Long in relation to claim 1). For example, Patent Owner agrees that Kenley archives files. *See, e.g.*, *id.* at 5 (stating Kenley "teaches a variation on the concept of hierarchical storge system for files") (citing Ex. 1014, 4:48–51); *id.* at 28 (citing Ex. 1014, 2:33–36, 2:44–48, 5:16–20, 5:48–6:18); Ex. 2020 ¶ 140.

We accordingly find Kenley and Long both disclose methods for archiving data, and Kenley's method archives files specifically. *See* Ex. 1004, 1:5–38, 8:29–49; Ex. 1014, 3:1–2, 3:29–39, 5:16–20, 5:48–57; Ex. 1003 ¶¶ 40–41, 59; Ex. 2020 ¶¶ 102, 140. We discuss Patent Owner's objections to Petitioner's alleged motivations for combining Kenley and Long to archive files below in Section III.D.3(a)(viii).

(ii) Step [1.2] — Detecting an Instruction to Perform an Operation on an Operating File

Step [1.2] recites "detecting an instruction by a resident program in a computing device for performing an operation on an operating file." Ex. 1001, 8:47–49.

Petitioner argues Long's archiving process correspondingly detects an instruction by a resident program to alter data stored on a hard disk in a computing device. *See* Pet. 19–21 (citing Ex. 1004, code (57), Fig. 5, 1:48–53, 1:67–68, 4:23–25, 6:60–63, 7:28–29, 7:32–37); Ex. 1003 ¶¶ 60–62.

Patent Owner does not oppose Petitioner's reliance on Long as disclosing this claim limitation, apart from noting that Long archives *storage device sectors* rather than the claimed *files*, which Petitioner concedes. *See, e.g.*, PO Resp. 6–27 (Patent Owner's argument opposing Petitioner's reliance on Long in relation to claim 1). We discuss Patent Owner's objections to Petitioner's alleged motivations for combining Kenley and Long to archive files below in Section III.D.3(a)(viii).

We find that, per step [1.2], Long detects an instruction by a resident program to perform an operation on hard disk 24 in a computing device. In particular, Long's "[p]rocessing circuitry detects accesses to [hard disk 24] which would alter data thereon" (Ex. 1004, 1:62–2:2), and Long's audit subsystem monitors whether an application generates a request "to modify the contents of" hard disk 24 in order to initiate an archiving process in response to the request (*id.* at 7:28–58 (Fig. 5)). *See* Pet. 19–21; Ex. 1003 ¶¶ 60–62.

(iii) Step [1.3] — Creating an Archive File and Storing the Archive File in a Temporary Storage Location

Step [1.3] recites "creating an archive file from the operating file and storing the archive file in a temporary storage location temporally proximate to the operation being performed on the operating file and responsive to detecting the instruction." Ex. 1001, 8:50–54.

Petitioner argues Long's archiving process correspondingly creates an archive copy of data stored on a hard disk in response to a request to modify the data and temporally proximate to the requested modification, and stores the archive copy in a temporary storage location (i.e., Long's "memory buffer"). *See* Pet. 9–11, 21–24 (citing Ex. 1004, Fig. 5, 3:1–2, 3:29–30, 4:44–47, 6:46–48, 7:28–55, 7:59–64, 8:14–17); Ex. 1003 ¶¶ 45, 63–65.

Patent Owner does not oppose Petitioner's reliance on Long as disclosing this claim limitation, apart from noting that Long archives *storage device sectors* rather than the claimed *files*, which Petitioner concedes. *See, e.g.*, PO Resp. 6–27 (Patent Owner's argument opposing Petitioner's reliance on Long in relation to claim 1). We discuss Patent Owner's objections to Petitioner's alleged motivations for combining Kenley and Long to archive files below in Section III.D.3(a)(viii).

We find that, per step [1.3], Long creates an archive of the hard disk data to be modified, and stores the archived hard disk data in a temporary storage location temporally proximate to the hard disk modification, responsive to detecting the instruction in step [1.2]. In particular, Long's audit subsystem, in response to detecting an application's request to modify the contents of hard disk 24, copies the hard disk data to be modified to the

memory buffer before the hard disk is modified. *See* Ex. 1004, 7:28–46, 7:54–58; Pet. 21–24; Ex. 1003 ¶¶ 63–65.

(iv) Step [1.4] — Identifying Presence of the Archive File in the Temporary Storage Location Responsive to Occurrence of a First Event

Step [1.4] recites "identifying presence of the archive file in the temporary storage location responsive to the occurrence of a first event." Ex. 1001, 8:55–57.

(1) The Petition as to Step [1.4]

Petitioner argues Long's archiving process identifies the presence of archived data in the temporary storage location (i.e., Long's "memory buffer") responsive to an event, in three ways. *See* Pet. 24–27; Ex. 1003 ¶¶ 66–71.

First, Petitioner asserts Long's audit subsystem identifies the presence of archived data in the memory buffer in response to either Long's memory buffer filling up, or Long's processing unit 14 requiring the memory buffer for another purpose, "as reflected by the fact that, responsive to either of these two events, this data is moved to the audit buffer [30 on hard disk 24]." Pet. 24–25 (citing Ex. 1004, 7:47–53, 8:20–23); Ex. 1003 ¶ 66.

Second, Petitioner asserts Long "teaches creating other information that is used to identify the presence of the archived data in the memory buffer responsive to" those same two events. Pet. 25; Ex. 1003 ¶ 67. In particular, Long "creates a marker in the memory buffer during '[s]torage of the data in the memory buffer,'" and Long's "'audit marker 32 comprises a marker header 34 and a marker trailer 36' where captured data 'is appended to the marker header 34.'" Pet. 25–26 (citing Ex. 1004, Fig. 3, 5:30–34,

7:59–8:13); Ex. 1003 ¶ 67. Dr. Maier testifies on behalf of Petitioner that "Long teaches using the marker trailer and marker header to determine the location of the marker," because "'[t]he marker trailer 36 is used to access the audit buffer 30 in reverse order,' and 'contains . . . information required to determine the location of the marker header.'" Pet. 26 (citing Ex. 1004, 5:54–59); Ex. 1003 ¶ 68. Dr. Maier also testifies that Long's "audit header [28] stores information regarding the markers, and the audit header is specifically updated with information regarding the last marker ('LastMarker') which indicates that new archive data has been placed in the audit buffer [30]." Pet. 26 (citing Ex. 1004, 5:22–24 (Table 1, "LastMarkerLoc")); Ex. 1003 ¶ 68.

Third, Petitioner asserts Long's memory buffer is "semaphored" which entails identifying the presence of archived data in the memory buffer. *See* Pet. 26–27 (citing Ex. 1004, 8:18–20); Ex. 1003 ¶ 69.

Petitioner concludes that, "[w]hen implemented for a file-based system such as Kenley's, these operations taught by Long result in the audit subsystem identifying the presence of the copied / archive file in the memory buffer (temporary storage location) responsive to a first event." Pet. 27; Ex. 1003 ¶ 70. Furthermore: "This identification would lead to the archive file being moved, or 'flush[ed],' to the audit buffer on the secondary disk storage, where the archive file is stored." Pet. 27 (citing Ex. 1004, 8:20–23, 7:47–53; Ex. 1014, 3:1–4); Ex. 1003 ¶ 70.

(2) The Patent Owner Response as to Step [1.4]

Patent Owner argues Petitioner has failed to show the combination of Kenley and Long "identif[ies] presence of *the archive file* in the temporary

storage location responsive to the occurrence of a first event," per step [1.4]. PO Resp. 6; Ex. 2020 ¶¶ 154–165. Patent Owner asserts Petitioner overlooks that step [1.4] "recites identifying the presence of the specific *archive file*, and not just the presence of any data." PO Resp. 6; *id.* at 7–8 (citing Pet. 24–25; Ex. 1003 ¶ 66). In this regard, Patent Owner notes "the archive file" of step [1.4] has antecedent basis in step [1.3], "creating an archive file from the operating file and storing the archive file in a temporary storage location" (Ex. 1001, 8:50–52), "which operating file is 'a system or user file' . . . containing all of the data of the operating file or at least some of the data and references to the location of the remainder of the data." PO Resp. 8 (citing Ex. 1001, 4:11 [sic "4:15"], 4:12–16 [sic "4:16–20"]).

Mr. Jawadi testifies that "[t]he alleged 'first events' mapped in the Petition result in Long moving (flushing) its memory buffer data from the memory buffer to the physical hard disk, but nothing in Long discloses or suggests that, in preparing for or making such a move, Long identifies the presence of any particular marker data within the memory buffer." *Id.* at 6–7 (citing Ex. 1004, 7:47–53, 8:20–23); Ex. 2020 ¶¶ 155–161. Mr. Jawadi further testifies that Long's "[f]lushing does not entail identifying the presence of any particular archive file as required by" step [1.4], because that claim requirement is different from "moving/flushing/dumping data or identifying the presence of a conglomeration of data, *i.e.*, the markers stored in Long's memory buffer." PO Resp. 7–8 (citing Ex. 1004, Fig. 2b, 8:20–23); Ex. 2020 ¶¶ 158–159.

Patent Owner also disputes Petitioner's contention that Long uses its audit markers 32, including marker headers 34 and marker trailers 36, to identify the presence of archived data in the memory buffer. *See*

PO Resp. 8–9 (citing Pet. 25–26; Ex. 1004, Fig. 3, 5:30–34). Patent Owner asserts "the existence of the marker data does not suggest that any identification of particular marker data occurs in response to any particular event in Long." *Id.* at 9. Mr. Jawadi testifies that: "When Long 'flush[es]' the data out of the memory buffer, nothing indicates that Long must or that it actually does identify the presence of any particular marker or data appended to any particular marker" and "[a]ll that happens is that the memory buffer — the entire memory buffer — is moved to the physical disk." *Id.* (citing Ex. 1004, 7:47–53); Ex. 2020 ¶¶ 158–159. Mr. Jawadi's opinion is that Long's "moving of the memory buffer contents would likely be done as a block copy" of multiple markers 32 utilizing audit header 28 that "tracks the beginning and the end of its memory buffer, which buffer is stored contiguously in memory" so no "identification of the markers / data within the buffer" is required. PO Resp. 9–10, 12–13 (citing Ex. 1004, 7:47–53); Ex. 2020 ¶ 158. Further and "critically" according to Mr. Jawadi, Long's audit header 28 "only stores information on the first and the last markers [32] in the buffer" — namely, "FirstMarkerLoc, FirstMarkerOffset, FirstMarkerSector, LastMarker, LastMarkerLoc, [and] LastMarkerOffset." PO Resp. 10–13 (citing Ex. 1004, Fig. 2b, 4:40–42, 4:57–5:25 (Table 1), 7:47–53); Ex. 2020 ¶ 159.

Patent Owner further disputes whether the semaphoring of Long's memory buffer entails the identification of step [1.4]. *See* PO Resp. 7, 13–14; Ex. 2020 ¶¶ 155, 162–163.

Patent Owner moreover asserts "Long does not perform any identification of the markers . . . *in response to* the alleged first events." PO Resp. 6; Ex. 2020 ¶¶ 160–161.

Patent Owner finally concludes that Petitioner's reliance on Kenley does not cure the deficiencies of Long argued above. *See* PO Resp. 14–15; Ex. 2020 ¶ 164.

(3) Petitioner's Reply as to Step [1.4]

Petitioner replies that "Patent Owner's arguments rely on a construction of [step] 1.4 that improperly imports additional limitations" that the archive file is a *specific* or *particular* archive file. Pet. Reply 9–10 (citing PO Resp. 7–9, 12–14). In Petitioner's view, the plain and ordinary meaning of "identifying presence of the archive file" in step [1.4] (Ex. 1001, 8:55) "does not require any specificity or particularity," and the fact that "the archive file" term has antecedent basis in step [1.3] does not establish otherwise. Pet. Reply 9–10; Ex. 1024 ¶¶ 28–29.

In support, Petitioner cites the '348 patent's disclosures that: (1) "smart data management block 15 regularly examines input buffer 20 for the presence of archive files"; and (2) "smart data manager 15 examines input buffer 20 to determine whether any archive files are stored therein," and "[i]f no archive files are present, smart data manager 15 rests idle until the next event occurs." Ex. 1001, 5:44–46, 6:26–29; *see* Pet. Reply 10 (also citing Ex. 1001, Fig. 2A, process element 100 ("SDM examines it's [sic] INPUT BUFFER to see if any files reside there.")). Petitioner asserts "[n]othing in this description requires any specificity or particularity in 'the step of identifying presence of the archive file in the temporary storage location,'" and it instead "shows that the claimed 'identifying presence . . .' encompasses and is met by examining the first temporary storage location to

make the determination of whether *any* files reside there." Pet. Reply 10–11; Ex. 1024 ¶ 30.

Petitioner then argues that, applying Petitioner's claim construction of step [1.4], the Kenley-Long system "identifies presence of the archive file in the temporary storage location because it must do so in order to move it from the memory buffer (temporary storage location) to the audit buffer [30 on hard disk 24] (intermediate storage location)." Pet. Reply 11 (citing Pet. 25; Ex. 1003 ¶ 66); Ex. 1024 ¶ 31.

Petitioner alternatively argues that, applying Patent Owner's narrower claim construction of step [1.4], Kenley and Long combine to render step [1.4] obvious, because the combined system "identifies presence of the particular archive file" in the temporary storage location to move it to the intermediate storage location. Pet. Reply 11–12. In support, Petitioner asserts a person of ordinary skill in the art "would have implemented Kenley-Long such that a file is copied into the memory buffer" by utilizing a database to record metadata that identifies "the copied file (i.e., the archive file) as the specific archive file (e.g., as opposed to another version of the file)," as well as "the current location of the copied file (archive file) to allow the system to locate the copied file." *Id.* (citing Pet. 25, 27; Ex. 1003 ¶¶ 55, 57–58, 67–68, 76–80; Ex. 1004, 5:30–67, 6:46–48; 7:59–64); Ex. 1024 ¶ 32. Next, when an event triggers flushing of the memory buffer, the Kenley-Long system examines the database to identify what archive files are in the memory buffer, and then "locat[es] the particular archive file in the memory buffer (identifying the particular archive file based on its metadata) so that the particular archive file may be moved." Pet. Reply 12 (citing Ex. 1003 ¶ 70); Ex. 1024 ¶ 32.

Further according to Petitioner, the evidence does not support Mr. Jawadi's testimony that "Long's flushing of the memory buffer 'would likely be done as a block copy in Long . . . without identifying the presence of particular markers within the memory.'" Pet. Reply 13 (citing PO Resp. 9); Ex. 1024 ¶ 35. Petitioner asserts Mr. Jawadi improperly focuses on Long alone, without addressing the Kenley-Long combination in which "*files* are stored in (and migrated from) the memory buffer." Pet. Reply 13. In Kenley's file-based context, Petitioner urges, a person of ordinary skill in the art "would have implemented the Kenley-Long system so as to identify presence of particular archive files in the memory buffer, in order to, *inter alia*, know when the file copy had completed and to allow for updating of the database so that the copied file could later be efficiently located." *Id.* at 13–14 (citing Ex. 1014, 3:5–8); Ex. 1024 ¶¶ 35–36.

(4) Patent Owner's Sur-Reply as to Step [1.4]

Patent Owner replies that the Kenley-Long system does not disclose or suggest "'identifying presence of *the* archive file,' under the proper construction," which "Requires Identifying the Presence of 'the' *Actual* Archive File." PO Sur-reply 1 (un-bolding section heading). In support, Patent Owner asserts "[t]he antecedent for 'the archive file' is the archive file that is created in [step] 1.3, ***from*** the operating file, on which an operation is detected per [step] 1.2," so step [1.4] "requires identifying a specific archive file." *Id.*

Petitioner's claim construction is incorrect, according to Patent Owner, because it "impermissibly broaden[s] the object of the identification, which is 'the archive file.'" *Id.* Patent Owner argues Petitioner "attempt[s]

to import limitations from the specification" into claim 1, "with disclosures regarding determining whether 'any' archive files are present in an input buffer," which is contrary to the claim language that recites "identifying the presence of the archive file, not identifying the presence of any archive files." *Id.* at 2 (citing Pet. Reply 10–11). Patent Owner asserts Petitioner's expert witness Dr. Maier "confirmed" during cross-examination in IPR2024-00078 concerning claim 1 of U.S. Patent No. 8,473,478 (a parent patent of the '348 patent at issue here)[5] that "'searching in the sense of when we have a collection of information' requires 'identifying an element of that collection,'" which is "persuasive evidence that identifying a file in a collection requires identifying the file itself, *i.e.*, an element of the collection." PO Sur-reply 2 (citing Ex. 2022, 70:16–71:14).

Patent Owner then argues that Petitioner's obviousness contentions applying Patent Owner's claim construction are "newly invented in" the Reply Brief, which is improper. *Id.* at 3.

On the merits of those obviousness contentions, Patent Owner argues the testimony of Dr. Maier cited by Petitioner fails to discuss "any metadata that could identify [the location of] Long's markers [32], only the marker header [34] and trailer [36], with captured data appended to the header [34]," and "[t]here is nothing in the Long markers [32], for example, to help determine one version of data from another version." *Id.* at 3–6 (citing Ex. 1003 ¶¶ 67–68). Indeed, according to Patent Owner, Long's disclosure of its marker trailer 36 contains an error, so Long "does not even contain

[5] The claim limitation at issue in the parent patent recites "*searching* the first temporary storage location for the archive file." IPR2024-00078, Ex. 1001, 8:49–51 (emphasis added).

information required to determine the location of the marker header [34]" to enable accessing audit buffer 30 in reverse order as Long describes. *Id.* at 4 (citing Ex. 1004, 5:59–67 (Table 3); Ex. 2025, 51:18–52:12). Thus, Patent Owner concludes Petitioner's combination of Kenley and Long rests on a misreading of Long's disclosure, so it should be rejected. *See id.* at 5–6.

Patent Owner also argues Mr. Jawadi's testimony "that Long's flushing of the memory buffer would likely be done as a block copy" and therefore not involve any identification per step [1.4] is supported by Long. *Id.* at 6 (citing PO Resp. 9–13; Ex. 2020 ¶¶ 158–159). Petitioner's additional reliance on Kenley in this regard, according to Patent Owner, is belatedly presented only in the Reply Brief and further is vague and unclear. *Id.* at 6–7 (citing Pet. Reply 13–14; Ex. 1014, 3:5–8; Ex. 2025, 66:10–68:13).

(5) Analysis and Conclusion as to Step [1.4]

We determine Petitioner's combination of Kenley and Long teaches or suggests step [1.4], regardless of which party's claim construction is applied. We firstly consider the claim construction dispute, then we turn to the pertinent teachings of Kenley and Long.

Claim Construction

We agree with Petitioner's claim construction that step [1.4] encompasses identifying the presence of *any* archive file in the temporary storage location, and does not require identifying a *particular* or *specific* archive file as Patent Owner argues. We discern nothing in the plain and ordinary meaning of the claim language ("identifying presence of the archive file" (Ex. 1001, 8:55)) that supports Patent Owner's construction.

Petitioner's construction by contrast is supported by the '348 patent specification, where it states that smart data manager 15 "*examines* input buffer 20 *for the presence of archive files*" or equivalently "to *determine whether any archive files are stored therein*." Ex. 1001, 5:44–46, 6:26–29 (emphases added). Figure 2A similarly describes how smart data manager 15 "examines it's [sic] INPUT BUFFER *to see if any files reside there*." *Id.* at Fig. 2A (process element 100, emphasis added). These disclosures reflect identifying the presence of any archive file in input buffer 20 (i.e., the temporary storage location of claim 1), not a specific or a particular archive file.

Patent Owner correctly points out that step [1.4] recites "identifying presence of *the* archive file" (Ex. 1001, 8:55 (emphasis added)), which refers back to the previous limitation reciting "creating an archive file from the operating file and storing the archive file in a temporary storage location" (*id.* at 8:50–52). Nonetheless, we conclude this simply defines the term "archive file" as a file that was created from an operating file. The claim language does not preclude step [1.4] from being met by examining the temporary storage location for the presence of any archive file that was created from an operating file, as established by the '348 patent disclosures cited above.

We have considered Dr. Maier's cross-examination testimony concerning the parent '478 patent cited by Patent Owner. *See* Ex. 2022, 70:16–71:14. That testimony focused on the claim term "searching" recited in claim 1 of the parent '478 patent, but not in claim 1 of the '348 patent at issue here, so it has little bearing in this case. *See id.* (Dr. Maier was asked "what definition of searching were you using?"); Ex. 1001, 8:55–57;

IPR2024-00078, Ex. 1001, 8:49–51. Moreover, although extrinsic evidence such as expert witness testimony "can shed useful light on the relevant art," it is "less significant than the intrinsic record [such as the patent specification] in determining 'the legally operative meaning of claim language.'" *Phillips v. AWH Corp.*, 415 F.3d 1303, 1317 (Fed. Cir. 2005) (en banc) (citations omitted); *see also id.* at 1318 ("We have viewed extrinsic evidence in general as less reliable than the patent . . . in determining how to read claim terms.").

In conclusion, we adopt Petitioner's claim construction that step [1.4] encompasses identifying the presence of any archive file in the temporary storage location.

Applying Petitioner's Claim Construction (Which We Have Adopted)

As discussed above ("Claim Construction"), we have adopted Petitioner's claim construction that step [1.4] encompasses identifying the presence of any archive file in the temporary storage location. Applying that construction, we find Long discloses step [1.4] as Petitioner contends.

Specifically, we find the claimed "first event" in Long occurs either: when the temporary storage location (i.e., Long's memory buffer) "is full"; or when "processing unit 14 requires memory used in the memory buffer for another purpose." Ex. 1004, 7:47–49; Pet. 24–25; Ex. 1003 ¶ 66. In response to either of those two events, Long's "audit subsystem writes the data stored in the memory buffer to" partition region 26 of hard disk 24, by "flush[ing] the memory buffer that contains the audit markers to the physical disk [24]." Ex. 1004, 7:47–53, 8:20–23, Figs. 2a–2b, Fig. 5 (steps 54 and 56); Pet. 24–25; Ex. 1003 ¶ 66.

Furthermore, we agree with Dr. Maier's testimony for Petitioner that: "To flush or move the memory buffer['s] data, *the system must identify the presence of the data in the memory buffer*; absent such identification the system would neither know what it is moving nor when the move has completed." Ex. 1003 ¶ 66 (emphasis added). Patent Owner's arguments and Mr. Jawadi's testimony in opposition are premised on Patent Owner's claim construction, which we have rejected above. *See, e.g.*, PO Resp. 6–13 (arguing Long does not identify the presence of "particular" or "specific" archived data in the memory buffer); Ex. 2020 ¶¶ 155–161 (materially the same). Thus, Dr. Maier's testimony in paragraph 66 of his declaration provides a preponderance of evidence to support Petitioner's reliance on Long's flushing of archived data from its memory buffer to its hard disk as disclosing step [1.4], applying Petitioner's claim construction which we have adopted above.

Dr. Maier goes beyond paragraph 66, to explain exactly how Long's flushing of archived data from its memory buffer to its hard disk includes the claimed "identifying" of step [1.4]. *See* Ex. 1003 ¶¶ 67–68; Pet. 25–26. We find this additional testimony is supported by a preponderance of the evidence. In particular, we find Long initially stores its archived data in the memory buffer as a series of audit markers 32, wherein the archived data is included as part of marker header 34 in each marker 32. *See* Ex. 1004, 5:33–34 ("If any data is captured, it is appended to the marker header 34."), 5:35–52 (disclosing that the "SectorData" field in marker header 34 contains "[t]he data that was read from the hard disk"), 7:59–64 (describing how audit marker 32 is created in the memory buffer), Fig. 3 (illustrating the archived "DATA" as part of marker header 34 in marker 32).

Then, when Long flushes those audit markers 32 from the memory buffer to partition region 26 of hard disk 24, it does so by searching the memory buffer for marker trailer(s) 36 to identify the audit markers 32 to be flushed, in reverse order in audit buffer 30. *See id.* at 5:54–59; Ex. 1003 ¶¶ 67–68. Furthermore, as Dr. Maier testifies, Long's audit header 28 "stores information regarding the markers" and "is specifically updated with information regarding the last marker . . . which indicates that new archive data has been placed in the audit buffer [30]." Ex. 1003 ¶ 68 (citing Ex. 1004, 5:22–24); *see* Ex. 1004, 4:57–5:24 (table of "Audit Header Fields" including the "LastMarkerLoc" field which contains "[t]he last marker location in the audit buffer").

Patent Owner's arguments and Mr. Jawadi's testimony in opposition to our foregoing findings, concerning exactly how Long's flushing of archived data from its memory buffer to its hard disk, rely on Patent Owner's claim construction which we have rejected above, and are therefore unavailing. *See, e.g.*, PO Resp. 6–13; Ex. 2020 ¶¶ 155–161. For example, we acknowledge Mr. Jawadi's testimony that Long's memory flushing process moves multiple markers 32 stored as a continuous sequence in the memory buffer as a block copy, by tracking the first and last markers 32 in the sequence via audit header 28. Ex. 2020 ¶¶ 158–161 (citing Ex. 1004, Fig. 2b, 4:40–42, 4:57–5:25 (Table 1), 7:47–52); *see* PO Resp. 7–13. Even if this is a correct reading of Long's memory flushing, however, the operation still involves identifying the presence of archived data in the memory buffer as discussed above.

We are not persuaded by Patent Owner's argument that Long's disclosure of its memory flushing process contains an error that prevents

determination of the marker header location. *See* PO Sur-reply 4 (citing Ex. 1004, 5:59–67 (Table 3); Ex. 2025, 51:18–52:12). It is true, as Patent Owner points out, that Long's Table 3 ("Marker Trailer" fields) does not appear to include a field for the location of the marker header 34 of marker 32. *See* Ex. 1004, 5:60–67; Ex. 2025, 51:18–52:12. However, immediately preceding Table 3, Long expressly states: "*The marker trailer 36 is used to access the audit buffer 30 in reverse order*," and "*[t]he marker trailer 36 contains* the type of event and *other information required to determine the location of the marker header [34]*." Ex. 1004, 5:54–59 (emphases added). We agree with Dr. Maier's testimony that, based on that disclosure, a person of ordinary skill in the art "would understand that that marker trailer had to contain information reflective of the total length of the marker [32] it was in," because "[o]therwise, it wouldn't be suitable for locating the marker header [34]." Ex. 2025, 51:21–52:3, 52:9–12.

Indeed, Patent Owner's argument does not cite any supporting testimony from Patent Owner's witness Mr. Jawadi. *See* PO Sur-reply 4. Mr. Jawadi in fact testifies that Long's audit header 28 "stores . . . information on the first and the last markers in the sequence of markers," such that Long "continues to track the beginning and the end of the buffer and needs only this information to enable the markers within the memory buffer to be moved and appended to the end of the set of markers already in the audit partition on the physical disk." Ex. 2020 ¶ 159 (citing Ex. 1004, Fig. 2b, 4:40–42, 4:57–5:25 (Table 1), 7:47–52); *see also* Ex. 1003 ¶ 68 (Dr. Maier agreeing that "Long teaches using the marker trailer and marker header to determine the location of the marker" in part because "the audit header stores information regarding the markers, and the audit header is

specifically updated with information regarding the last marker ('LastMarker') which indicates that new archive data has been placed in the audit buffer"). This testimony contradicts Patent Owner's position that Long fails to describe how its memory buffer can be flushed to its hard disk.

Finally, we do not reach Petitioner's reliance on Long's memory buffer being "semaphored" as establishing that Long discloses the identification of step [1.4]. *See* Pet. 26–27; Pet. Reply 13; PO Resp. 7, 13–14; PO Sur-reply 6.

Thus, applying Petitioner's claim construction which we have adopted, we find Long discloses step [1.4].

Applying Patent Owner's Claim Construction

Next, we conclude that even if step [1.4] requires identifying the presence of a *particular* or *specific* archive file in the temporary storage location per Patent Owner's claim construction, Petitioner's combination of Kenley and Long still satisfies step [1.4].

As an initial matter, we disagree with Patent Owner's position that Petitioner is precluded from arguing this combination in the Reply Brief. *See, e.g.*, Patent Trial and Appeal Board Consolidated Trial Practice Guide (Nov. 2019)[6], 73 ("Petitioner may not submit new evidence or argument in reply that it could have presented earlier, e.g. to make out a prima facie case of unpatentability."). The Federal Circuit has "held that 'where a patent owner in an IPR first proposes a claim construction in a patent owner response, a petitioner must be given the opportunity in its reply to argue and present evidence of anticipation or obviousness under the new construction,

[6] *Available at* https://www.uspto.gov/TrialPracticeGuideConsolidated.

at least where it relies on the same embodiments for each invalidity ground as were relied on in the petition." *Apple Inc. v. Omni MedSci. Inc.*, 2024 WL 3084509, *5 (Fed. Cir. June 21, 2024) (quoting *Axonics, Inc. v. Medtronic, Inc.*, 75 F.4th 1374, 1384 (Fed. Cir. 2023)).

That holding in *Axonics* controls here, because the Reply Brief relies on the same embodiments in Kenley and Long that are cited in the Petition in response to the Patent Owner Response asserting the claim should be construed to require identifying a *specific* archive file. *See* PO Resp. 6–7. In particular, the Petition cites Long as disclosing an archiving process that searches a temporary storage location for archived data responsive to an event, and then argues "[w]hen implemented for a file-based system such as Kenley's, these operations taught by Long result in" step [1.4]. Pet. 24–27. The Reply Brief then explains how the combination of the same embodiments from Kenley and Long suggests step [1.4], even applying the claim construction first proposed in the Patent Owner Response. *See* Pet. Reply 12–14.

Thus, we consider the merits of Petitioner's argument. However, we defer this discussion to Section III.D.3(c) below, because Petitioner's contentions for step [1.4] are intertwined with Petitioner's contentions for the database limitations of claim 1 (i.e., steps [1.6], [1.9], and [1.10]), which we address below in Section III.D.3(b).

(v) Step [1.8] — Moving the Archive File from the Temporary Storage Location to an Intermediate Storage Location

Step [1.8] recites "moving the archive file from the temporary storage location to an intermediate storage location." Ex. 1001, 8:66–67.

Petitioner argues Long's archiving process correspondingly moves archived data from the temporary storage location (i.e., Long's "memory buffer") to an intermediate storage location (i.e., Long's partition region 26 of hard disk 24). *See* Pet. 10–11, 34–36 (citing Ex. 1004, Figs. 5 and 6, 7:38–53, 8:20–23, 8:29–9:9); Ex. 1003 ¶¶ 46, 85–86.

Patent Owner does not oppose Petitioner's reliance on Long as disclosing this claim limitation, apart from noting that Long archives *storage device sectors* rather than the claimed *files*, which Petitioner concedes. *See, e.g.*, PO Resp. 6–27 (Patent Owner's argument opposing Petitioner's reliance on Long in relation to claim 1). We discuss Patent Owner's objections to Petitioner's alleged motivations for combining Kenley and Long to archive files below in Section III.D.3(a)(viii).

We find that, per step [1.8], Long moves the archived data from Long's memory buffer to Long's partition region 26 of hard disk 24. *See* Ex. 1004, 7:47–53; Ex. 1003 ¶¶ 85–86.

(vi) Step [1.7] — Determining a Final Destination for the Archive File

Step [1.7] recites "determining a final destination for the archive file." Ex. 1001, 8:65.

Petitioner argues Kenley's archiving process and Long's archiving process both correspondingly determine a final destination for their archived data. *See* Pet. 33–34 (citing Ex. 1004, Fig. 6, 4:61–5:24 (Table 1), 7:1–14, 8:29–9:9; Ex. 1014, 3:9–12); Ex. 1003 ¶¶ 81–84.

Patent Owner does not oppose Petitioner's reliance on Kenley and Long as disclosing this claim limitation, apart from noting that Long archives *storage device sectors* rather than the claimed *files*, which

Petitioner concedes. *See, e.g.*, PO Resp. 6–27 (Patent Owner's argument opposing Petitioner's reliance on Long in relation to claim 1). We discuss Patent Owner's objections to Petitioner's alleged motivations for combining Kenley and Long to archive files below in Section III.D.3(a)(viii).

We find that, per step [1.7], Long determines a final destination for the archived hard disk data. In particular, Long determines "a removable media, such as a floppy disk" for storing the archived hard disk data (Ex. 1004, 7:12–14, 8:32–33), which includes ensuring that the removable archive media is appropriately mounted within the system and is not yet full (*see id.* at 8:50–63). *See* Ex. 1003 ¶¶ 83–84.

(vii) Step [1.5] — Transmitting the Archive File to a Second and Permanent Storage Location Responsive to a Second Event

Step [1.5] recites "transmitting the archive file to a second storage location responsive to a second event, the second storage location being an intermediate or a permanent storage location." Ex. 1001, 8:58–61. Although the second storage location can be either "intermediate" or "permanent" (*id.*), we focus on the latter alternative in this Decision.

Petitioner argues Long's archiving process correspondingly transmits archived data from the intermediate storage location (i.e., Long's partition region 26 of hard disk 24) to a second and permanent storage location (i.e., Long's "removable media"), "'at predetermined intervals (for example, every five seconds),' based on a 'five second ticker'" or alternatively upon "detecting that the archive media is mounted with available storage space." Pet. 27–29 (citing Ex. 1004, Fig. 6, 7:1–3, 7:10–14, 7:18–26, 8:29–9:9); Ex. 1003 ¶¶ 72–73.

Patent Owner does not oppose Petitioner's reliance on Long as disclosing this claim limitation, apart from noting that Long archives *storage device sectors* rather than the claimed *files*, which Petitioner concedes. *See, e.g.*, PO Resp. 6–27 (Patent Owner's argument opposing Petitioner's reliance on Long in relation to claim 1). We discuss Patent Owner's objections to Petitioner's alleged motivations for combining Kenley and Long to archive files below in Section III.D.3(a)(viii).

We find that, per step [1.5], Long transmits the archived data from Long's partition region 26 to a removable media, responsive to a second event. In particular, in Long the second event can correspond to either audit buffer 30 in partition region 26 reaching a predefined percentage of its storage capacity (*see* Ex. 1004, 7:18–27, 8:50–52), or expiration of a predetermined time interval such as every five seconds (*see id.* at 8:36–37). *See* Pet. 27–28; Ex. 1003 ¶ 72. The combination of those events causes the audit subsystem to "store[] overflow information from the audit partition onto a removable media." Ex. 1004, 7:12–14, 8:29–9:9; *see* Pet. 27–29; Ex. 1003 ¶¶ 72–73. Furthermore, Long's second storage location (i.e., the removable media) is a permanent storage location, "because it is a persistent 'archive media for external storage.'" Pet. 28 (quoting Ex. 1004, 8:33); Ex. 1003 ¶ 72.

(viii) Motivation to Archive Files (per Kenley) Temporally Proximate to Modifications (per Long)

(1) Petitioner's Alleged Motivations to Combine Kenley and Long

Petitioner contends a person of ordinary skill in the art "would have been motivated, with a reasonable expectation of success to implement Kenley's file-based backup system with the modification-driven archival

approach taught by Long, to improve reliability and provide other benefits to the system." Pet. 13, 18; Ex. 1003 ¶¶ 49, 58. Dr. Maier testifies that Kenley's incremental archiving technique beneficially stores "only '[a] copy of . . . specified files of data that has been modified since a specified date, usually the date of the last full or incremental backup.'" Ex. 1003 ¶ 50 (citing Ex. 1014, 5:3–6, 7:19–30, 12:66–13:17); *see* Pet. 13. Dr. Maier further testifies that Long's archiving technique beneficially provides "increased reliability by creating backup data after each modification [of a hard disk], thus avoiding the potential loss of data created in between the timed backups of Kenley and other incremental backup systems" due to power outages or operator error. Ex. 1003 ¶ 50 (citing Ex. 1004, 1:46–55, 1:62–65, 4:23–27); *see* Pet. 13.

According to Dr. Maier, these respective teachings of Kenley and Long would have motivated a person of ordinary skill in the art "to incorporate Long's technique of backing up data upon modification into a file-based backup system such as Kenley because the Long technique further increases the reliability of file backup, as there is no delay between modification and backup." Ex. 1003 ¶¶ 50, 52 (citing Ex. 1004, 1:2–3, 1:62–64, 2:13–14; Ex. 1014, 2:26–30, 2:33–36, 3:1–47); *see* Pet. 13–14. This combination further allegedly "serves the goal of 'reduc[ing] the time associated with conventional data migration schemes' taught by Kenley." Ex. 1003 ¶ 50.

Dr. Maier moreover opines that a person of ordinary skill in the art "would have known that Long is applicable to [archiving] files," despite Long's focus on archiving hard disk data sectors rather than files specifically. *Id.* ¶ 53 (citing Ex. 1004, 1:46–48, 4:23–25, 7:28–29); *see*

Pet. 14–15. Dr. Maier testifies that "data on a hard disk was most commonly organized as files to facilitate data access using a file system." Ex. 1003 ¶ 53. Dr. Maier adds: "As Kenley explains, 'stor[ing] data organized as files' and using file attributes to track the backup location of files enables the data to be more easily and transparently recovered from archive storage media for use by an application." *Id.* (citing Ex. 1014, 3:29–32, 7:19–62).

Dr. Maier further concludes a person of ordinary skill in the art would have achieved the proposed combination of Kenley and Long with a reasonable expectation of success. *See* Ex. 1003 ¶¶ 56–57 (citing Ex. 1004, 11:54–56); Pet. 16–18. Dr. Maier cites "Schneider-US" (Ex. 1016, U.S. Patent No. 6,016,553 to Schneider et al. (issued Jan. 18, 2000)) in support. *See* Ex. 1003 ¶ 57 (citing Ex. 1016, Fig. 38, 6:33–36, 46:25–26, 46:36–47:9).

(2) Patent Owner's Opposition as to Motivation to Combine

Patent Owner argues and Mr. Jawadi testifies that it would not have been obvious to combine Kenley with Long as proposed by Petitioner, because "the two references are from different types of systems that are mutually exclusive and incompatible" — with Kenley being "a file-system-level reference" and Long being "a hardware system that deals with sector writes to a physical hard disk, as well as other hardware events." PO Resp. 27–28 (citing Ex. 1004, Fig. 5, 1:56–59, 7:37–40; Ex. 1014, 2:33–36, 2:44–48, 5:16–20, 5:48–6:18); *id.* at 5 (further citing Ex. 1004, 4:40–42); Ex. 2020 ¶¶ 41–48, 56–100, 102–153. Mr. Jawadi testifies that "[f]ile systems and physical disks/sectors exist at separate conceptual levels in data storage systems, with hardware agnostic file systems built on top of

hardware specific physical disk/sector drivers," such that "[t]he low (near the hardware) level implementation of Long would not and could not recognize the concept of files." PO Resp. 27, 28; Ex. 2020 ¶¶ 136, 141–149. And, according to Patent Owner, Dr. Maier "admitted that Long was concerned with hardware," even though he "attempted to couch Long as being more broadly applicable" to fit Petitioner's obviousness theory. PO Resp. 27–28 (citing Ex. 2022, 44:11–12, 45:18–24, 47:19–48:2).

Patent Owner also argues Long teaches away from being combined with Kenley's higher-level file archiving system, by "teach[ing] that error detection and containment should be 'confined at the lowest possible level' and that errors at that level 'are more easily detected than errors originating within modules that generate or transform data.'" *Id.* at 5–6, 29–30 (citing Ex. 1004, 1:65–2:2, 3:1–50); Ex. 2020 ¶¶ 123, 133–136.

Patent Owner moreover asserts that combining Kenley and Long as proposed by Petitioner would change the principle of operation of either reference, so this would not have been obvious to do. *See* PO Resp. 30 (citing *In re Ratti*, 270 F.2d 810, 813 (CCPA 1959); MPEP § 2143.01); Ex. 2020 ¶¶ 148–152. In particular, according to Patent Owner and Mr. Jawadi: "Kenley and Long operate at fundamentally different levels, Kenley at the file level and Long at the hardware level" such that combining them "would require reengineering Kenley, Long, or both references, which would be a significant undertaking." PO Resp. 30; Ex. 2020 ¶¶ 148, 150–152.

(3) Petitioner's Reply as to Motivation to Combine

Petitioner replies that Patent Owner misapprehends Petitioner's reliance on Long in the obviousness combination. *See* Pet. Reply 2. Petitioner asserts the proposed combination "uses Long's teachings on modification-driven backup" wherein a backup copy of data is created prior to modification of the data, and the backup copy then is migrated through different storage locations. *See id.* (citing Pet. 8–18; Ex. 1004, 7:28–53, 8:29–55); Ex. 1024 ¶ 9. Petitioner contends Patent Owner's opposition is premised on the bodily incorporation of Long's system into Kenley, which is not proposed in the Petition and is not required to demonstrate obviousness. Pet. Reply 3–4 (citing PO Resp. 27–30; Pet. 16–17) (case law citations omitted); Ex. 1024 ¶¶ 9, 15–24.

Petitioner also asserts Long's modification-driven backup method would have improved, and is compatible with, backing up files per Kenley. *See* Pet. Reply 1, 3–4. Petitioner cites Schneider-US as prior art to the '348 patent which is not addressed in the Patent Owner Response, and which "describes using Long's technique for file backup" as "a 'fundamental method[] of recording the original state of information prior to its being altered' that was applicable to files and file-based systems." Pet. Reply 1, 2–3, 4–5 (citing Pet. 17–18; Ex. 1016, 4:27–38, 6:33–35, 8:7–18); Ex. 1024 ¶¶ 11–14. Further according to Petitioner, other prior art references such as "Matze"[7] and "Farley"[8] demonstrate that persons of ordinary skill in the art "understood the differences between file-based and sector-based approaches

[7] Ex. 1025 (U.S. Patent No. 5,907,672 to Matze et al. (issued May 25, 1999)).

[8] Ex. 1007 (Marc Farley, *Building Storage Networks* (©2000) (excerpts)).

to backup, and knew how to successfully apply concepts from one type of approach to the other." Pet. Reply 5 (citing Ex. 1025, 1:13–5:21, 5:31–6:15); *id.* at 6 (citing Ex. 1007, 256–257); Ex. 1024 ¶¶ 15, 18–19. Petitioner moreover asserts Kenley and Long both describe and incorporate aspects of file-based and sector-based systems. *See* Pet. Reply 1, 5–6 (citing Ex. 1004, code (57), 7:28–29, 12:19–37; Ex. 1014, 11:20–12:14, 16:5–32, 19:3–25; Ex. 2020 ¶¶ 57–59; Ex. 2022, 47:23–48:2, 49:2–9); Ex. 1024 ¶¶ 16–17, 24.

Petitioner further argues Long does not teach away from being combined with file-based systems. *See* Pet. Reply 6 (citing Pet. 16; Ex. 1004, 11:54–56); Ex. 1024 ¶¶ 20–24. Petitioner acknowledges Long's disclosure, cited by Patent Owner, that "[e]rrors occurring in data-storage components . . . are more easily detected than errors originating within modules that generate or transform data." Ex. 1004, 3:7–11; *see* Pet. Reply 6–7 (citing PO Resp. 29). Petitioner asserts this disclosure does not criticize, discredit, or discourage "the combination of Long's technique of triggering backup upon a modification request with a file-based backup/archival system such as Kenley." Pet. Reply 7 (citing *In re Fulton*, 391 F.3d 1195, 1201 (Fed. Cir. 2004)). Further according to Petitioner: "Nothing about Long's discussion of detecting *errors* would have discouraged . . . implementing Long's broader teachings regarding detecting *modification requests*" as a trigger for backing up data. *Id.* at 7–8 (citing Ex. 1004, 1:67–68, 2:64–68, 3:1–33, 7:28–32, 7:37–38); Ex. 1024 ¶¶ 21–23.

Finally, Petitioner asserts that combining Kenley and Long does not destroy the principle of operation of Kenley, and instead it improves Kenley

based on all of the arguments summarized above. *See* Pet. Reply 8–9 (citing Pet. 13, 14); Ex. 1024 ¶¶ 25–27.

(4) Patent Owner's Sur-Reply as to Motivation to Combine

Patent Owner maintains in reply that Kenley and Long are incompatible because "Long pertains to disk sectors and Kenley to files." PO Sur-reply 9.

Patent Owner asserts Petitioner "incorrectly argue[s] that Long teaches a non-existent 'general technique'" because "Long does not have general disclosure, untethered to sectors" and "the entire disclosure of Long is about the lower level / hard disk / sectors." *Id.* at 9–10 (section heading modified) (citing Pet. Reply 2, 5; PO Resp. 27–30). Patent Owner argues Dr. Maier "understood this," as he testified under cross-examination that "Long would detect file-based operations . . . *because those file modifications ultimately get down to the level where you are writing [to] disk*." Ex. 2022, 48:8–13 (emphasis added); *see* PO Sur-reply 10. Patent Owner asserts: "Any 'detection' of file-based operations is merely the consequence of files being composed of sectors and Long working at the level of sectors; Long itself clearly does not detect file-based operations." PO Sur-reply 10. Further according to Patent Owner, Petitioner's and Dr. Maier's citations to Long's disclosures do not support a broader reading, because Long "makes clear that locations of the storage device are *sector* data storage locations" which are not file-based. *Id.* at 10–12 (emphasis added) (citing Pet. Reply 2–3, 5–6; Ex. 1004, code (57), Fig. 5, 7:39–42, 9:39–43, 10:17–18, 11:21–22, 12:26–27, 14:21–22; Ex. 2025, 18:7–21:7, 21:18–23:1, 29:7–34:21).

Patent Owner argues Petitioner's reliance on Matze is misplaced, and "Matze actually supports Patent Owner's arguments, comparing two backup strategies, 'file-by-file, which has well-accepted usability characteristics but whose performance is proving extremely difficult to maintain as technology advances' and image backup." *Id.* at 13 (citing Pet. Reply 5; Ex. 1025, 5:15–18, 5:24–30).

Patent Owner further argues Petitioner "overstate[s]" the teachings of Schneider-US, because it merely "characterizes the 'move method' generally, and *not Long in particular*, as being a fundamental method." *Id.* at 13 (citing Pet. Reply 2–3). Indeed, according to Patent Owner, Schneider-US describes the move method "as having 'the drawback of *fundamentally being slow*'" and "further discusses Long's process as having a 'flaw' that the RAM cache is insufficient for file data." *Id.* at 13–14 (citing Ex. 1016, 6:62–64, 8:45–52). Patent Owner further asserts: "The fact that Schneider-US uses the move method in conjunction with disclosure about files" carries little weight here because "Schneider and his co-inventors have not been presented as having 'ordinary skill in the art.'" *Id.* at 14 (citing Ex. 2025, 13:20–15:11).

Patent Owner finally asserts "Long teaches away from use at a higher level . . . and there is no distinction between Long's error detection at the lowest level and Long's audit information," because "all of this information is stored together" in Long. *Id.* at 12 (citing Ex. 1004, code (54); Ex. 2025, 38:4–19, 40:20–41:8).

(5) Analysis and Conclusion as to Motivation to Combine

We conclude a preponderance of the evidence supports Petitioner's alleged motivations to combine Kenley and Long with a reasonable expectation of success.

In particular, we determine a person of ordinary skill in the art would have been motivated to modify Kenley's process of backing up *files*, by *triggering the creation of an archive file whenever a file is modified* using *three successive backup memories* per the teachings of Long. *See* Pet. 13, 18; Pet. Reply 2–4. Dr. Maier testifies in support that this would have been done to improve the reliability of Kenley's file archiving process, by avoiding the potential loss of data created in between Kenley's archiving of files at predetermined time intervals. *See* Pet. 13–15, 18; Ex. 1003 ¶¶ 49–50, 52–53, 58. Patent Owner does not materially dispute the improved reliability benefits achieved by this combination of Kenley and Long.

Instead, Patent Owner pre-supposes that Petitioner's case for obviousness is premised on the bodily incorporation of Long's sector-based archiving process into Kenley's file-based archiving process. *See, e.g.*, Ex. 2020 ¶¶ 103–139 (Mr. Jawadi discussing how Long's sector-based backup system does not apply to file-based backup systems). However, that is not what Petitioner proposes, as summarized above in Sections III.D.3(a)(viii)(1) and (3). Moreover, the test for obviousness is not whether the features of one reference (such as Long) may be bodily incorporated into the structure or process of the other reference (such as Kenley), but rather is "what the combined teachings of the references would have suggested to those of ordinary skill in the art." *In re Keller*, 642 F.2d 413, 425 (CCPA 1981). Furthermore, "[a] person of ordinary skill is also a person of ordinary

creativity, not an automaton," and "in many cases a person of ordinary skill will be able to fit the teachings of multiple patents together like pieces of a puzzle." *KSR*, 550 U.S. at 420–21. We discern no reason why a person of ordinary skill in the art would have been deterred from modifying Kenley's file archiving process to be triggered whenever a file is modified and to use three successive backup memories per the teachings of Long, in order to increase its reliability as set forth above.

Patent Owner's expert Mr. Jawadi testifies, at some length, that file-based backup systems like Kenley's and sector-based backup systems like Long's are different. *See* Ex. 2020 ¶¶ 41–48 (discussing the '348 patent's file-based backup system), ¶¶ 56–63 (discussing respective advantages and disadvantages of file-based and sector-based backup systems in general), ¶¶ 64–100 (discussing how file-based and sector-based backup systems operate at different "levels" of a computing device's "layered" data storage "architecture"), ¶¶ 102–139 (discussing Long's sector-based backup system), ¶ 140 (discussing Kenley's file-based backup system), ¶¶ 141–153 (discussing Petitioner's alleged motivations to combine). We agree with Mr. Jawadi that these two types of systems are different, in various ways as described by Mr. Jawadi.

However, we part ways with Mr. Jawadi's testimony in his various conclusory assertions such as: "the techniques and solutions for managing data at the file system level are *rarely applicable* to the disk/sector level, and vice versa"; there are "*significant barriers to any combination* of Kenley and Long"; "Long's teachings were specific to a sector-level implementation and could not be reasonably expected to succeed in a file-level implementation, and vice versa"; and "extracting functionality from Long into Kenley (or

vice versa) *would have required substantial redesign, reconstruction, and rewrite* of Long's extracted functionality." Ex. 2020 ¶¶ 66, 141, 143, 145 (all emphases added). Those conclusions and Mr. Jawadi's testimony as a whole fail to address the specific modification of Kenley's file-based backup system proposed by Petitioner — *triggering the creation of an archive file whenever a file is modified* using *three successive backup memories*, as discussed above. Mr. Jawadi does not explain why those specific modifications would have been non-obvious, specifically including why they would have been difficult to achieve or beyond the capabilities of a person of ordinary skill in the art.

Indeed, we credit Dr. Maier's testimony that a person of ordinary skill in the art would have known "that data on a hard disk was most commonly organized as files to facilitate data access using a file system." Ex. 1003 ¶ 53 (citing, e.g., Ex. 1012[9], 1:26–60; Ex. 1013[10], 5:18–51). In other words, as Patent Owner acknowledges, filed-based and sector-based backup methods both back up data stored on sectors of a hard disk. *See* PO Sur-reply 10 ("Any 'detection' of file-based operations [in Long] is merely the consequence of *files being composed of sectors*" (emphasis added) because "*file modifications ultimately get down to the level where you are writing disk*" (emphasis in original)); Tr. 46:14–47:22, 61:3–8. The difference lies in how the collection of bytes on the hard disk being backed up is defined — either as the collection of bytes that make up a particular file (in a file-based system), or as the collection of bytes that make up a particular sector of the

[9] U.S. Patent No. 5,485,606 to Midgdey et al. (issued Jan. 16, 1996).

[10] U.S. Patent No. 5,745,313 to Sliger (issued Apr. 28, 1998).

hard disk (in a sector-based system), wherein the sector may include one or more portions of one or more files, and/or non-file data.

Mr. Jawadi agrees, where he testifies that "*[f]ile systems* operate at the operating system level . . . and *call hardware-specific disk drive device drivers to access the data stored in sectors (blocks)*." Ex. 2020 ¶ 65 (emphasis added). Mr. Jawadi also testifies that "*a file roughly consists of one or multiple sectors (or blocks)*," and "most operating systems commonly allocate *storage to files in units called* <u>*clusters*</u>*, and a cluster is one or more blocks (or sectors)*." *Id.* ¶¶ 78–84 (emphasis added). Mr. Jawadi similarly testifies that "*Long can process sectors containing file data as well as sectors containing non-file data*, but Long does so on a sector basis and with no regard to whether the data is file data or non-file data," and "*Long processes file data and non-file data identically*, without even knowing if the data is file data and non-file data." *Id.* ¶ 116 (emphasis added). In light of the fact that the data being backed up in both filed-based and sector-based systems is stored in hard disk sectors, we conclude these respective systems are not so different that a person of ordinary skill in the art would have been deterred from, or unable to trigger, backing up a file whenever the file is modified, simply because the teaching for such a trigger comes from a sector-based system such as Long's.

Moreover, other evidence of record supports Petitioner's combination of Kenley and Long. As a first example, Schneider-US identifies Long as an exemplar of what Schneider-US describes as the Move Method of backing up data prior to alteration. *See* Ex. 1016, 4:27–38 (identifying Long as providing a previously known approach to backing up data prior to executing requests to alter the data), 6:31–50 (describing "five fundamental

methods" of backing up data, including the "Move Method: Move before overwrite"), 8:7–18 ("The basic elements of the Move Method are described in [Long]."). Dr. Maier testifies that Schneider-US also "expressly describes use of Long's audit buffer technique for saving a file's data before the file is altered," thereby confirming "[t]he reasonable expectation of success, and overall obviousness, of implementing Long's technique for a file-based system." Ex. 1003 ¶ 57 (citing Ex. 1016, 6:33–36, 46:25–26, 46:36–47:9 (Figs. 37 and 38)); Ex. 1024 ¶¶ 12–13, 15 (further citing Ex. 1016, 4:27–38, 6:42, 8:7–52).

We partially agree with Dr. Maier's foregoing reliance on Schneider-US. Specifically, we find Schneider-US expressly describes *the Move Method (generically)*, albeit not Long's method (specifically), as being useful to back up *a file* before the file is altered. *See* Ex. 1016, 46:23–47:9 (Figs. 37 and 38); Ex. 1003 ¶ 57; Ex. 1024 ¶¶ 12–13, 15; *see also* PO Sur-reply 14 (conceding "Schneider-US uses the move method in conjunction with disclosure about files"). Despite this quibble, Schneider-US still establishes that it was known to trigger file-based backup systems to create a backup copy of a file whenever the file is modified, and thereby supports Petitioner's contention that a person of ordinary skill in the art would have been motivated to modify Kenley's file-based backup system to implement such a trigger with a reasonable expectation of success. Patent Owner objects that the inventors of Schneider-US have not been qualified as persons of ordinary skill in the art pertaining to the '348 patent, but Patent Owner does not object to the expert witness qualifications of Dr. Maier who relies on Schneider-US as evidence supporting his testimony that Kenley and Long would have been combined. *See* Ex. 1003 ¶ 57.

Patent Owner also contends that Schneider-US describes the Move Method as having "the drawback of fundamentally being slow" (Ex. 1016, 6:62–64), and as having the "flaw" that the "RAM cache is often insufficient to hold the amount of data typically written" (*id.* at 8:40–52). *See* PO Sur-reply 13–14. At best for Patent Owner, however, this merely establishes that there are disadvantages to using a file-based backup system versus a sector-based backup system — namely, the former is slower and requires more memory to implement than the latter. Yet, trade-offs regarding features do not necessarily prevent an obviousness combination; instead, the obviousness analysis weighs the advantages and the disadvantages of a proposed combination.[11] Here, a person of ordinary skill in the art would have been motivated to combine Kenley and Long in order to improve the reliability of Kenley's file-based backup system, at the expense of slowing down Kenley's file modifications and requiring more memory. Indeed, Long teaches that one way to alleviate the speed disadvantage is to use a semiconductor memory buffer as the first of three successive backup memories to reduce the time required to back up the archived data before it is modified and overwritten. *See* Ex. 1004, 7:28–58 (Fig. 5 steps 50 and 52).

As further evidence, Schneider-US discusses various differences between file-based backup processes and sector-based backup processes,

---

[11] *See Medichem, S.A. v. Rolabo, S.L.*, 437 F.3d 1157, 1165 (Fed. Cir. 2006) ("[A] given course of action often has simultaneous advantages and disadvantages, and this does not necessarily obviate motivation to combine."); *Winner Int'l Royalty Corp. v. Wang*, 202 F.3d 1340, 1349 n.8 (Fed. Cir. 2000) ("The fact that the motivating benefit comes at the expense of another benefit, however, should not nullify its use as a basis to modify the disclosure of one reference with the teachings of another. Instead, the benefits, both lost and gained, should be weighed against one another.").

including some advantages and disadvantages of each approach. *See* Ex. 1016, 2:7–19, 3:37–49, 3:66–4:7, 4:12–26; *see also* Inst. Dec. 27 (discussing equivalent disclosures in Schneider). For example, a sector-based backup is faster and requires less administration than a file-based backup (*see* Ex. 1016, 2:7–19, 4:20–26), whereas a file-based backup can be restored more efficiently than a sector-based backup (*see id.* at 2:7–19). Furthermore, Schneider-US expressly recognizes that its methods may be used in connection with file-based backup processes. *See id.* at 6:31–50 ("The example embodiments of the present invention present five fundamental methods" of backing up data, including four sector-based methods and the "File Method: Implemented in the filing system at the file or portion of file level."). Mr. Jawadi's testimony similarly discusses several relative advantages and disadvantages of sector-based and file-based backup systems. *See* Ex. 2020 ¶¶ 56–63.

Farley also supports our present Decision.[12] Farley compares and contrasts "backup operations . . . incorporat[ing] file system or database facilities for identifying and copying data" (i.e., file-based backup systems) with making an "image copy of the physical block contents of a storage device or subsystem" (i.e., sector-based backup systems). Ex. 1007, 256. Farley then states "*[i]t is possible to combine the concept of image backup with file system backup*." *Id.* at 256–257 (emphasis added). Thus, we agree with Dr. Maier that Farley cuts against Mr. Jawadi's testimony that

[12] Patent Owner does not challenge whether Farley (© 2000) might have been published too late to be considered in this context against the '348 patent, which asserts priority to a provisional application filed in September 2000. *See* Ex. 1007, (iv); Ex. 1001, code (60).

file-based and sector-based backup systems are mutually exclusive and incompatible. *See* Ex. 1024 ¶ 18–19.

We do not rely on Matze. Petitioner and Dr. Maier generally cite more than four columns of Matze's disclosure as demonstrating that a person of ordinary skill in the art "understood the differences between file-based and sector-based approaches to backup, and knew how to successfully apply concepts from one type of approach to the other." Pet. Reply 5 (citing Ex. 1025, 1:13–5:21, 5:31–6:15); Ex. 1024 ¶ 15 (same). Petitioner, however, does not explain adequately how such a large swath of disclosure relates to Petitioner's obviousness contentions and satisfies Petitioner's burden. *See* 35 U.S.C. § 312(a)(3) (a petitioner must identify "with particularity . . . the evidence that supports the grounds for the challenge"); 37 C.F.R. § 42.22(a)(2) (a petitioner must provide "[a] full statement of the reasons for the relief requested, including *a detailed explanation of the significance of the evidence including material facts*" (emphasis added)).

Next, we disagree with Patent Owner's argument that Long teaches away from Petitioner's combination of Kenley and Long. *See* PO Resp. 5–7, 29–30 (citing Ex. 1004, 1:65–2:2, 3:1–50); Ex. 2020 ¶¶ 123, 133–136. The cited disclosures of Long pertinently state: "*Errors occurring in data-storage components* . . . or during data transmission . . . *are more easily detected than errors originating within modules that generate or transform data*," and "[t]o protect critical system resources and minimize recovery time, *errors must be confined to the module in which they originated* . . . with *errors confined at the lowest possible level to a replaceable module*." Ex. 1004, 3:1–33 (emphases added). Long may teach away from *detecting errors* at the file level, but it does not teach away from *backing up data* at

the file level as posited by Petitioner. *See* Ex. 1024 ¶¶ 22–23 (Dr. Maier making this same distinction).

Finally, we also disagree with Patent Owner's argument that Petitioner's combination of Kenley and Long improperly changes the principle of operation of Kenley or Long. *See* PO Resp. 30; Ex. 2020 ¶¶ 150–152. As discussed in detail above, file-based and sector-based backup systems were known alternatives in the art for archiving computer data, such that it would have been within the level of ordinary skill to implement either alternative as appropriate.

For the foregoing reasons, we conclude a preponderance of the evidence supports Petitioner's alleged motivations to combine Kenley and Long with a reasonable expectation of success.

(b) Utilizing a Database (per Kenley) To Record the Various Locations of the Archive File as it is Migrated to Permanent Storage

(i) Steps [1.6], [1.9], and [1.10] of Claim 1

Steps [1.6], [1.9], and [1.10] combine to recite that a database is updated to indicate where the archive file is located as it is migrated to the temporary storage location (step [1.6]), then to the intermediate storage location (step [1.9]), and finally to the second and permanent storage location. Ex. 1001, 8:62–64 (step [1.6]), 9:1–5 (steps [1.9] and [1.10]).

(ii) Petitioner's Argument as to Combining Kenley and Long to Update a Database to Record the Location of the Archive File as it is Migrated

Petitioner argues Kenley and Long combine to render obvious the collection of steps [1.6], [1.9], and [1.10]. *See* Pet. 30 (step [1.6]), 37–38 (step [1.9]), 40 (step [1.10]); Ex. 1003 ¶¶ 76, 90–91, 94–95.

Focusing on step [1.6], Petitioner cites Kenley as utilizing a database to record "a 'system catalog' for maintaining and providing transparent access to file attribute and location data," as part of "migrating data" through multiple storage locations. Pet. 8, 30 (citing Ex. 1014, 2:6–14, 2:44–68, 3:17–28, 4:54–66, 6:35–40, 8:26–29); *see also id.* at 16 ("Fourth") (also citing Ex. 1014, 10:43–52); *id.* at 32–33 (discussing combination of Kenley and Long); Ex. 1003 ¶¶ 41, 55, 76, 78. In particular, Dr. Maier testifies that Kenley's catalog stores and maintains "the locations of backup copies of a file after the backup copy is moved (migrated)." Pet. 30; Ex. 1003 ¶ 76.

Petitioner next relies on Long's archiving process as storing archived data in a temporary storage location (i.e., Long's "memory buffer"), and then updating audit header 28 to indicate the archived data is located in the memory buffer. *See* Pet. 30–32. Specifically, according to Petitioner, Long "teaches an audit header [28] that is updated to reflect changes in the data's storage location, including when the copied data is stored within the memory buffer (temporary storage location)," and also "when the data is moved from the memory buffer (temporary storage) to the audit buffer [30 on hard disk 24]." *Id.* (citing Ex. 1004, 2:5–8, 4:44–47, 4:57–5:24 (Table 1), 7:47–53, 7:59–68); Ex. 1003 ¶ 77. Dr. Maier testifies that "[c]onstant updating of this audit header [28] to indicate the location of the data in the memory buffer and other locations, after storing the data in the respective locations, facilitates the audit subsystem's accurate retrieval and movement of data for both backup and recovery." Pet. 31 (citing Ex. 1003 ¶ 77).

Petitioner then turns to steps [1.9] and [1.10], and argues Long's archiving process updates audit header 28 to indicate the archived data is located in the intermediate storage location (i.e., partition region 26 of hard

disk 24) and then in the second and permanent storage location (i.e., the removable media). *See* Pet. 36–37 (citing Ex. 1004, Figs. 5 and 6, 4:61–5:24 (Table 1), 7:47–53); *id.* at 38–40 (citing Ex. 1004, Fig. 6, 4:44–47, 4:61–5:24 (Table 1), 9:7–9); Ex. 1003 ¶¶ 89, 92–93.

Petitioner finally asserts that, in view of the foregoing teachings in Kenley and Long, a person of ordinary skill in the art "would have been motivated with a reasonable expectation of success to implement Kenley-Long such that information on current locations of different backup files, including the audit-header information taught by Long, was stored in the relational database catalog taught by Kenley." Pet. 32; Ex. 1003 ¶ 78. This would have entailed, according to Petitioner, "[m]aintain[ing] relevant audit header information, as taught by Long, in a backup catalog in [Kenley's] relational database." Pet. 18; Ex. 1003 ¶ 58. In support, Petitioner asserts and Dr. Maier testifies that "Kenley's teaching of a database-held system catalog that 'stor[es] and provid[es] transparent access to catalogued file attribute data' dovetails with Long's teachings on an audit header for similarly maintaining data on the current location of backup copies of data." Pet. 16, 30–32, 36–40 (quoting Ex. 1014, 3:17–28) (citing Ex. 1004, Figs. 5 and 6, 2:5–8, 4:44–47, 4:57–5:24, 7:47–53, 7:59–68, 9:7–9; Ex. 1014, 2:6–14, 3:25–28, 6:35–40, 8:26–29, 10:43–52); Ex. 1003 ¶¶ 55, 76–78, 89–95.

(iii) Patent Owner's Opposition as to Combining Kenley and Long to Update a Database to Record the Location of the Archive File as it is Migrated

Focusing on step [1.6], Patent Owner asserts Petitioner's combination of Kenley and Long is premised entirely on storing Long's "relevant

audit-header information" (specifically) to record the location of the archived data, as Dr. Maier allegedly confirmed during his deposition. PO Resp. 15–16, 20 (citing Pet. 32; Ex. 2022, 58:14–59:2); Ex. 2020 ¶¶ 166–167. Patent Owner argues Long's audit header 28, however, "stores location information only about the first and last marker [32]" in audit buffer 30, rather than "the location of any individual markers [32] in between" the first and last markers 32. PO Resp. 16, 17–18, 19–21 (citing Ex. 1004, Fig. 2b, 2:5–8, 4:44–47, 4:57–5:24 (Table 1), 7:47–53); Ex. 2020 ¶¶ 167, 169–176. Patent Owner similarly disagrees with Petitioner's position that Long updates audit header 28 "to indicate the location of the data in *the memory buffer and other locations*, after storing the data in the respective locations" (Pet. 31 (emphasis added)) — Patent Owner's view is that Long's audit header 28 "does not indicate the location of the data within the memory buffer" and "contains only location information for the first and the last marker." PO Resp. 19–20; Ex. 2020 ¶ 172.

Patent Owner also addresses the following passage in Long:

> Storage of the data in the memory buffer is performed in three stages. The marker header 34 is created and stored in the memory buffer. If sector data is stored, it is added to the marker header. Finally, the marker trailer 36 is stored. The complete operation creates the marker 32.
>
> The system constructs the audit header from the type of marker (corresponding to the type of event), the markers' CRC, the current system time, and the location that the sector data is from on the hard disk.

Ex. 1004, 7:59–68; *see* PO Resp. 18. Petitioner cites this passage as "disclos[ing] 'construct[ing] *the audit header* [28]' for a marker [32] after '[s]torage of the data in the memory buffer' in the marker [32].'" Pet. 31 (emphasis added). Patent Owner argues and Mr. Jawadi testifies that "<u>this is</u>

actually a mistake in Long" because "Long does not construct an '*audit header'* [28] for a marker [32], rather it constructs a *marker header* [34] for a marker [32]." PO Resp. 18 (italicized emphases added); Ex. 2020 ¶ 171. According to Patent Owner and Mr. Jawadi, this is established by the portion of the passage at issue "about constructing the 'audit header'" which "outlines the fields from the Long marker header [34], *i.e.*, 'the type of marker (corresponding to the type of event), the markers' CRC, the current system time, and the location that the sector data is from on the hard disk.'" PO Resp. 18–19 (citing Ex. 1004, 5:31–53 (Table 2), 7:65–68); Ex. 2020 ¶ 171. Patent Owner adds that Dr. Maier admitted this was a mistake in Long. *See* PO Resp. 19 (citing Ex. 2022, 69:21–70:6).

Patent Owner also argues Petitioner's reliance on Kenley, as teaching a database to record various locations of archived files as they are migrated to permanent storage, does not solve the foregoing deficiency of Long. *See* PO Resp. 16 (citing Pet. 30). In support, Patent Owner asserts Kenley's backup catalog does not store "the *location* of any archive files," because the catalog merely lists "files stored to specific 'savesets'" which does "not disclose the *location* of any particular archive file in its respective saveset." *Id.* at 16–17 (citing Ex. 1014, 2:6–14, 3:17–28, 6:35–40, 8:26–29); Ex. 2020 ¶¶ 168, 181, 188.

Further concerning step [1.9], Patent Owner addresses Petitioner's reliance on the statement in Long that: "When the memory buffer is full (decision block 54) . . . the audit subsystem writes the data stored in the memory buffer to the end of the audit buffer 30 on disk (block 56) and updates the audit header (in the memory buffer) to reflect the changes (block 58)." Ex. 1004, 7:47–53 (describing Fig. 5); *see* Pet. 36. Patent

Owner argues this statement "only shows" that Long updates the audit header in *the temporary storage location* (i.e., Long's memory buffer) when the archived data is migrated to *the intermediate storage location* (i.e., partition region 26 of hard disk 24), to reflect that migration. PO Resp. 22; Ex. 2020 ¶ 179. According to Patent Owner: "Nothing in this statement relates to the audit buffer [30] on the disk [24], the alleged intermediate storage location of [Petitioner's] Kenley-Long combination," which is the focus of step [1.9]. PO Resp. 22; Ex. 2020 ¶ 179.

Patent Owner also addresses Petitioner's and Dr. Maier's reliance on the "BufLoc" field in Long's Table 1 of "Audit Header Fields," as indicating that "[t]he audit header is updated to indicate '[t]he physical location of the beginning of the audit buffer on disk.'" Pet. 37 (citing Ex. 1004, 4:61–5:24 (Table 1)); Ex. 1003 ¶ 89. Patent Owner argues and Mr. Jawadi testifies that "[t]his is not correct" because, although the BufLoc field "keeps track of the beginning of the audit buffer [30]" on hard disk 24, the BufLoc field "is not updated when data is added to the end of the audit buffer on the disk (the alleged intermediate location) from the memory buffer (the alleged temporary storage location)." PO Resp. 22–23; Ex. 2020 ¶ 180.

Further concerning step [1.10], Patent Owner addresses Petitioner's reliance on the disclosure in Long that "[t]he [archive] track is then written to the archive media in block 68" and "[a]fter the write is completed, *the audit header in memory is modified to show the removal of the audit markers from the audit buffer 30*." Ex. 1004, 9:3–9 (emphasis added) (describing Fig. 6); *see* Pet. 38–39. Patent Owner asserts and Mr. Jawadi testifies this disclosure "merely discusses that the audit header of the physical disk removes the reference to whatever data is moved at the end of

the audit buffer," and it "does not show any sort of database update to indicate that any data is located in the archive media." PO Resp. 24; Ex. 2020 ¶ 186.

Patent Owner also addresses Petitioner's and Dr. Maier's reliance on Long's Table 1 of "Audit Header Fields" as "specifying the location of data in the archive media that are 'used to manage the . . . archive media.'" Pet. 39–40 (citing Ex. 1004, 4:44–47, 4:61–5:24 (Table 1)); Ex. 1003 ¶ 93. Patent Owner asserts and Mr. Jawadi testifies these disclosures "do not disclose or suggest using Long's audit header to keep track of the location of markers of Long in the archive disk." PO Resp. 25; Ex. 2020 ¶ 187. Patent Owner therefore concludes these disclosures do not "indicate the archive file is located in the second storage location, as recited in" step [1.10]. PO Resp. 25; Ex. 2020 ¶ 187.

(iv) Petitioner's Reply as to Combining Kenley and Long to Update a Database to Record the Location of the Archive File as it is Migrated

Petitioner replies that "Patent Owner's arguments miss the forest for the trees by narrowly focusing on select language in the individual references." Pet. Reply 14–15; *see* Ex. 1024 ¶ 38.

Concerning Kenley, Petitioner urges that "[w]ithout indicating the location of archive files, Kenley's database storing backup catalogs would be useless," so a person of ordinary skill in the art would have known Kenley's "catalogs would store location information enabling the system to locate the file." Pet. Reply 15–16 (citing Pet. 15, 16, 30; Ex. 1014, 3:17–28, 6:35–40 (Fig. 1B), 7:45–62, 8:8–13, 8:26–29, 10:34–61; Ex. 1027, 67); Ex. 1024 ¶¶ 39–40.

Concerning Long, Petitioner asserts it updates audit header 28 "to indicate the location of copied data" as it is moved from the memory buffer to the hard disk partition to the removable media. Pet. Reply 16 (citing Pet. 10–11, 30–31, 36–40; Ex. 1004, 4:44–47); Ex. 1024 ¶ 41. According to Petitioner, "Patent Owner repeatedly admits that the audit header is updated with location information for data when it is placed into the memory buffer," and Patent Owner "seems to agree that Long" updates the audit header every time a marker comprising the archived data is moved to the hard disk partition and then to the removable media. Pet. Reply 16–17 (citing PO Resp. 9, 10–13, 18–21); Ex. 1024 ¶ 42.

(v) Patent Owner's Sur-Reply as to Combining Kenley and Long to Update a Database to Record the Location of the Archive File as it is Migrated

Patent Owner replies that Petitioner's characterization of Kenley "as *requiring* indications of the location of archive files" is not supported by Kenley. PO Sur-Reply 7 (citing Pet. Reply 15). In Patent Owner's view: "All that the disclosures of Kenley from the Petition show is that lists of files in a save set are maintained" and "[t]his is not location information." *Id.* at 7–8 (citing PO Rep. 16; Ex. 2020 ¶ 168). Furthermore, "the Kenley catalog is not in connection with the primary storage and contains information on data in the secondary and backing store," such that it is "unclear" how Kenley discloses or suggests step [1.6]. *Id.* at 8 (citing Ex. 1014, 3:17–28).

Concerning Long, Patent Owner reiterates that it "does not store location information for its markers in its audit header, instead storing only

information for the first and the last marker." *Id.* at 8–9 (citing PO Resp. 18–20).

(vi) Analysis and Conclusion as to Combining Kenley and Long to Update a Database to Record the Location of the Archive File as it is Migrated

We conclude a preponderance of the evidence supports Petitioner's combination of Kenley and Long as leading to steps [1.6], [1.9], and [1.10] without improper hindsight, for the following three reasons.

First, we find Kenley's processor 12 utilizes database 14 to record the location of archive files as they are migrated through Kenley's backup storage volumes 20 and 24. *See* Ex. 1014, Fig. 1B, 6:44–66 (identifying processor 12, database 14, baseline backup volume 20, and full / incremental backup volume 24); *supra* Section III.D.1 (describing how Kenley backs up files stored on system disks 18 to backup volume 20, and then migrates the archive files to backup volume 24). In particular, Kenley describes database 14 as "a relational database that stores digital information representing . . . *backup catalogs* (i.e., lists of all files copied to specific backup savesets)." Ex. 1014, 6:35–40 (emphasis added); *see also id.* at 8:25–29 ("The backup processor 12 records to the system administration database 14 a catalog of all files backed up to the baseline backup trail 22 and the full / incremental backup trail 26.").

Kenley also describes how, when a system operator initiates a file recovery process by identifying "the name of the backup template used when the files were originally backed up, along with a list of desired files," then processor 12 "*searches the backup catalogs in system administration database 14* for backup savesets with a matching backup template name" and date range. *Id.* at 10:34–52 (emphasis added). Then: "*Once backup*

volumes that contain the set of files to extract are identified," processor 12 opens the backup volumes and extracts "[t]he requested files . . . from the backup saveset (or savesets)." *Id.* at 10:53–68 (emphasis added). Thus, Kenley describes how the "catalog element" maintained in database 14 provides "transparent access to catalogued file attribute data representative of the attributes of the data files stored in the secondary storage element [20], and for maintaining the catalogued file attribute data after the data contained in the selected data files have been migrated to backing store [24]" (*id.* at 3:17–28), which overcomes a problem in previous systems that "no ready means is provided for cataloging information stored offline, requiring users to manually track their own information files" (*id.* at 2:1–10).

In light of the foregoing disclosures in Kenley, we are persuaded by Dr. Maier's testimony that Kenley's processor 12 utilizes database 14 to record the location of archived files as they are migrated through Kenley's backup storage volumes 20 and 24. *See* Ex. 1003 ¶ 76 ("Kenley teaches a relational database that holds a 'system catalog' for storing and maintaining the locations of backup copies of a file after the backup copy is moved (migrated)."); *id.* ¶¶ 41, 55; *see* Pet. 8, 16 ("Fourth"), 30.

Patent Owner's opposition and Mr. Jawadi's testimony that Kenley's catalog comprises only "lists of all files copied to specific backup savesets," which do not include "the *location* of any archive files" is unavailing. PO Resp. 16–17; *see* Ex. 2020 ¶¶ 168, 181, 188. In particular, Patent Owner and Mr. Jawadi overlook Kenley's disclosure discussed above that its processor 12 searches the catalogs in database 14 for backup savesets that match a list of files to be recovered, in order to identify the backup volume(s) 20 or 24 that contain the archive files for recovery — that is, the

location of the archive files. *See* Ex. 1014, 10:34–68; Ex. 1003 ¶ 55. Patent Owner and Mr. Jawadi similarly do not address persuasively Kenley's disclosure discussed above that the catalog maintains file attribute data to overcome the problem in previous systems that users had to manually track their own files, which suggests the catalog stores the location of archive files so that users can access them when needed. *See* Ex. 1014, 2:1–10, 3:17–28; Ex. 1003 ¶¶ 41, 55, 76.

Second, we find Long utilizes audit header 28 to record the location of archived data as it is migrated to the memory buffer, then to partition region 26 of hard disk 24, and finally to a removable storage media. *See* Pet. 30–32, 36–40. For example, Long describes how audit header 28 "contains information on the configuration of the audit buffer region [30]" which is "used to control the way the audit buffer 30 is configured and processed." Ex. 1004, 2:5–8, 4:44–47, 4:57–60. This information includes "[t]he physical location of the beginning of the audit buffer on disk" (BufLoc), "[t]he current location of the audit buffer [30] in the disk cache" (Cacheloc), "[t]he location of the first marker [32] in the audit buffer [30]" (FirstMarkerLoc), "[t]he last marker [32] location in the audit buffer [30]" (LastMarkerLoc), and "[t]he physical location of the last data in the buffer [30]" (CLoc). *Id.* at 4:57–5:24 (Table 1, "Audit Header Fields"). Long's system "updates the audit header [28] (in the memory buffer) to reflect the changes" when the system writes data stored in the memory buffer to hard disk 24, and then modifies the audit header again when the system writes data stored on hard disk 24 to the removable storage media. *Id.* at 7:47–53 (Fig. 5 step 58), 8:50–9:9 (Fig. 6 step 70).

In light of the foregoing disclosures in Long, we are persuaded by Dr. Maier's testimony that "[c]onstant updating of [Long's] audit header [28] to indicate the location of the data in the memory buffer and other locations, after storing the data in the respective locations, facilitates the audit subsystem's accurate retrieval and movement of data for both backup and recovery." Ex. 1003 ¶ 77; *id.* ¶¶ 89, 92–93.

Patent Owner's arguments and Mr. Jawadi's testimony in opposition are unavailing. Even if Mr. Jawadi is correct that Long's audit header 28 tracks *only* the location of the first and last markers 32 in audit buffer 30, that information still "indicate[s] that *the archive file is located in*" the temporary storage location, which is all that step [1.6] requires. Ex. 1001, 8:63–64 (emphasis added). In particular, it is undisputed that Long stores its archived data in the memory buffer as part of marker headers 34 of markers 32. *See supra* Section III.D.3(a)(iv)(5) (citing Ex. 1004, 5:33–52, 7:59–64, Fig. 3); PO Resp. 12 ("Long's Figure 2b is disclosed in relation to the audit partition [26] on the disk [24] . . . but it is just as descriptive of the memory buffer that stores the same sort of markers and audit headers."). Long further utilizes audit header 28 to track the location of at least the first marker 32 and the last marker 32 defining the collection of markers that forms memory buffer 30 in the semiconductor memory buffer, as each marker 32 is added to the collection, thereby indicating that the archived data is located in the semiconductor memory buffer as recited in step [1.6]. *See* Ex. 1004, 4:57–5:24 (Table 1 "Audit Header Fields" include FirstMarkerLoc and LastMarkerLoc).

We agree with Patent Owner's argument and Mr. Jawadi's testimony that Long's reference to constructing "the *audit* header" (i.e., audit

header 28) at column 7, line 65 is an error, which should have been "the *marker* header" (i.e., marker header 34) instead. *See* PO Resp. 18–19; Ex. 2020 ¶ 171; *see also* Ex. 2022, 69:4–70:8 (Dr. Maier agrees too). However, this does not affect our findings and conclusions set forth above, which do not rely on that typographical error.

Steps [1.9] and [1.10], similarly to step [1.6], require only that the database is updated "to indicate that *the archive file is located in*" the intermediate storage location and then the second and permanent storage location. Ex. 1001, 9:1–5 (emphasis added). Long correspondingly updates audit header 28 "to reflect the changes" when the system moves archived data from the memory buffer to hard disk 24 (Ex. 1004, 7:47–53 (Fig. 5 step 58)), and then modifies the audit header again when the system moves the archived data from hard disk 24 to the removable storage media (*id.* at 8:50–9:9 (Fig. 6 step 70)). Patent Owner's opposition and Mr. Jawadi's testimony, which focus on which audit header 28 is updated (whether in the semiconductor memory buffer or on hard disk 24) and exactly how audit header 28 tracks the location of archived data, overlook the breadth of the claim language which simply requires recording where the archived data is located, which Long does utilizing audit header 28. *See* PO Resp. 21–22, 24; Ex. 2020 ¶¶ 179–180, 186.

Further concerning step [1.10], Long's disclosure states audit header 28 "is modified to show *the removal of the audit markers* from the audit buffer 30" on hard disk 24, but this is done only after the archived data "is written to the archive media." Ex. 1004, 9:6–9 (Fig. 6 steps 68 and 70) (emphasis added). Thus, this modification identifies the location of the archived data as being on the removable media, per step [1.10].

Patent Owner and Mr. Jawadi also overlook the import of Long's usage of audit header 28 in combination with Kenley's database 14 which maintains the location of archive files as they are migrated through backup storage volumes, discussed above. Patent Owner correctly points out that the Petition refers to "implement[ing] Kenley-Long such that information on current locations of different backup files, *including the audit-header information taught by Long*, was stored in the relational database catalog taught by Kenley." Pet. 32 (emphasis added); *see also* Ex. 2022, 58:14–59:2 (Dr. Maier testifying that "Yes, I'm describing that in this combination, that the audit header information taught by Long would reside in a database catalogue as taught by Kenley.").

However, reading the Petition as a whole, we disagree with Patent Owner's position that Petitioner proposes the bodily incorporation of Long's marker 32 and audit buffer 30 structures into Kenley's system. *See* Pet. 15–16 ("Third" and "Fourth"), 30–33, 36–40. Instead, the referenced "audit-header information taught by Long" is tracking the location of archived data as it is migrated through three tiers of backup storage, without the details of Long's specific marker 32 and audit buffer 30 structures. *See id.* Moreover, as we previously noted, the test for obviousness is not whether the features of one reference (such as Long) may be bodily incorporated into the structure or process of the other reference (such as Kenley), but rather is "what the combined teachings of the references would have suggested to those of ordinary skill in the art." *Keller*, 642 F.2d at 425.

<u>Third</u>, we determine that, in view of the foregoing disclosures in Kenley and Long, a person of ordinary skill in the art would have been motivated to combine those references to record information in a catalog

(per Kenley) indicating the current location of an archive file (per Kenley and Long) as it is migrated through three successive backup memories (per Kenley and Long). *See* Pet. 16 ("Fourth"), 18, 32; Ex. 1003 ¶¶ 55, 58, 78. Patent Owner's opposition to this determination focuses on the exact manner in which Long utilizes audit header 28 to track the location of archived data as it moves through Long's three successive backup memories. However, "[n]on-obviousness cannot be established by attacking references individually where the [unpatentability] is based upon the teachings of a combination of references." *In re Merck & Co.*, 800 F.2d 1091, 1097 (Fed. Cir. 1986); *see also Fleming v. Cirrus Design Corp.*, 28 F.4th 1214, 1222 (Fed. Cir. 2022) ("That the proposed *combination* of James and POH — rather than one of the individual references — discloses the disputed claim limitations does not defeat the Board's conclusion of obviousness.").

Moreover, "[a] person of ordinary skill is also a person of ordinary creativity, not an automaton," and "in many cases a person of ordinary skill will be able to fit the teachings of multiple patents together like pieces of a puzzle." *KSR*, 550 U.S. at 420–21. Here, we are persuaded by Dr. Maier's testimony that Kenley's and Long's similar disclosures regarding tracking the location of archived data as it is migrated through various backup storage locations "dovetail[]" with each other, leading a person of ordinary skill in the art to combine them as recited in steps [1.6], [1.9], and [1.10] in order to ensure transparent access to archived data regardless of where it is stored. Ex. 1003 ¶¶ 55, 58, 78; Ex. 1024 ¶¶ 38–41; *see also* Tr. 56:6–22 (Petitioner's counsel arguing "in Kenley-Long, a combination of Kenley and Long, where skilled artisans are realizing you can make a quick copy, backup copy of a file before it's modified and put it into RAM, and then

migrate it through the different tiers of storage . . . you would need to track that location as well," and "[y]ou don't just let the archived file disappear for a while and then suddenly start tracking it when it gets to another tier of storage, you'd rather want to be able to access it, restore it, regardless of where it's stored").

Thus, we conclude a preponderance of the evidence supports Petitioner's proffered motivations to combine Kenley and Long in relation to steps [1.6], [1.9], and [1.10] with a reasonable expectation of success.

(c) Combining Kenley and Long for Step [1.4] Applying Patent Owner's Claim Construction

Pertinent to step [1.4] even if we were to apply Patent Owner's claim construction that requires identifying the presence of a *particular* or *specific* archive file in the temporary storage location, we further conclude that Petitioner's combination of Kenley and Long satisfies that construction.

In particular, as discussed above in Section III.D.3(b) in relation to the database limitations [1.6], [1.9], and [1.10], we conclude a person of ordinary skill in the art would have been motivated to combine Kenley and Long to record information in a catalog indicating the current location of an archive file as it is migrated through three successive backup memories. Concerning step [1.4], we further conclude that when implementing that combination, a person of ordinary skill in the art would have been motivated to record the current location of *each particular* archive file as it is migrated, to allow the system to locate *that particular* archive file if needed for backup or recovery. *See* Ex. 1024 ¶ 32 (citing Ex. 1004, 5:30–67, 6:46–48, 7:59–64; Ex. 1003 ¶¶ 55, 58, 67–68, 76–80); Pet Reply 11–12. Thus, when the Kenley-Long system migrates archive files from the temporary storage

location to the intermediate storage location, it will *identify the presence* of a particular archive file in the temporary storage location to be moved, as recorded in the database. *See* Ex. 1024 ¶ 32 (citing Ex. 1003 ¶ 70); Pet. Reply 11–12. This is because "[i]t must do so, in order to track the location of each archive file as it migrates through the different storage levels." Ex. 1024 ¶ 32 (citing Ex. 1003 ¶¶ 53, 76).

Patent Owner's opposition to our foregoing findings and conclusions myopically focuses on the exact manner in which Long tracks, or in some respects does not track, the location of archived data as it is migrated through Long's three successive backup memories. *See* PO Sur-reply 3–6. As with other issues discussed above, this argument once again unpersuasively attacks Long individually, when Petitioner's asserted obviousness is predicated on the combined teachings of Kenley and Long. *See Merck*, 800 F.2d at 1097; *Fleming*, 28 F.4th at 1222. In particular, Petitioner's combination archives *files* per Kenley, and in that context a person of ordinary skill in the art would have been motivated to record the current location of *each particular* archive file as it is migrated, in case it is needed for backup or recovery. *See* Pet. Reply 13–14; Ex. 1024 ¶¶ 35–36; *KSR*, 550 U.S. at 420–21 ("A person of ordinary skill is also a person of ordinary creativity, not an automaton," and "in many cases a person of ordinary skill will be able to fit the teachings of multiple patents together like pieces of a puzzle.").

Thus, we conclude Petitioner's combination of Kenley and Long satisfies step [1.4] without improper hindsight, even applying Patent Owner's claim construction of step [1.4].

(d) Conclusion as to Claim 1

For the foregoing reasons, we conclude Petitioner has shown by a preponderance of the evidence that claim 1 is unpatentable as having been obvious over Kenley and Long.

4. Claims 2–6, 8–20, and 23–31

Petitioner provides arguments and evidence in support of its contention that claims 2–6, 8–20, and 23–31 are unpatentable as having been obvious over Kenley and Long. *See* Pet. 40–59; Ex. 1003 ¶¶ 96–139.

Patent Owner does not address claims 2–6, 8–20, and 23–31 apart from arguments we have already considered above in connection with claim 1. *See, e.g.*, PO Resp. 1 (summarizing Patent Owner's opposition to Ground One); *id.* at 15 (arguing Ground One fails as to claims 2–6, 8–20, and 23–31 for "the same reasons" argued for step [1.4] of claim 1); *id.* at 21, 23–24, 26–27 (arguing Ground One fails as to claims 2–6 and 8–11 due to argued deficiencies regarding steps [1.6], [1.9], and [1.10] of claim 1); *id.* at 27–30 (arguing Ground One fails as to all challenged claims due to an alleged lack of motivation for combining Kenley and Long). For reasons provided above in Section III.D.3, we have concluded Patent Owner's various arguments as to claim 1 are unavailing.

As to Petitioner's remaining (and unopposed) analysis addressing the subject matter of claims 2–6, 8–20, and 23–31 that differs from claim 1, we adopt Petitioner's analysis as our own in this Decision. *See* Pet. 40–59.

Accordingly, we conclude Petitioner has shown by a preponderance of the evidence that claims 2–6, 8–20, and 23–31 are unpatentable as having been obvious over Kenley and Long.

E. Ground Two — Asserted Obviousness over Cabrera, Schneider, and Whiting

In Ground Two, Petitioner asserts claims 1–6, 8–20, and 23–31 of the ’348 patent are unpatentable as having been obvious over Cabrera, Schneider, and Whiting. *See* Pet. 2, 59–83. Patent Owner disagrees. *See* PO Resp. 31–56.

We have concluded that each of claims 1–6, 8–20, and 23–31 is unpatentable per Ground One (obviousness over Kenley and Long). *See supra* Section III.D. On the record presented, we discern no need to address Ground Two, so we decline to do so in this Decision. *See SAS Inst. Inc. v. Iancu*, 584 U.S. 357, 371 (2018) (holding a petitioner “is entitled to a final written decision addressing all of the claims it has challenged”); *Bos. Sci. Scimed, Inc. v. Cook Grp. Inc.*, 809 F. App’x 984, 990 (Fed. Cir. 2020) (recognizing the “Board need not address issues that are not necessary to the resolution of the proceeding,” and agreeing the Board has “discretion to decline to decide additional instituted grounds once the petitioner has prevailed on all its challenged claims”).

IV. SUMMARY OF CONCLUSIONS

In summary, we determine a preponderance of the evidence establishes claims 1–6, 8–20, and 23–31 of the ’348 patent are unpatentable as shown in the following table:[13]

---

[13] Should Patent Owner wish to pursue amendment of the challenged claims in a reissue or reexamination proceeding subsequent to the issuance of this decision, we draw Patent Owner’s attention to the April 2019 *Notice Regarding Options for Amendments by Patent Owner Through Reissue or Reexamination During a Pending AIA Trial Proceeding*. *See* 84 Fed. Reg.

Claim(s)	35 U.S.C. §	Reference(s)/ Basis	Claim(s) Shown Unpatentable	Claim(s) Not Shown Unpatentable
1–6, 8–20, 23–31	103(a)	Kenley, Long	1–6, 8–20, 23–31	
1–6, 8–20, 23–31	103(a)	Cabrera, Schneider, Whiting[14]		
Overall Outcome			**1–6, 8–20, 23–31**	

V. ORDER

In consideration of the foregoing, it is hereby:

ORDERED that claims 1–6, 8–20, and 23–31 of the ’348 patent have been proven by a preponderance of the evidence to be unpatentable; and

FURTHER ORDERED that, because this is a final written decision, parties to this proceeding seeking judicial review of our Decision must comply with the notice and service requirements of 37 C.F.R. § 90.2.

16,654 (Apr. 22, 2019). If Patent Owner chooses to file a reissue application or a request for reexamination of the challenged patent, we remind Patent Owner of its continuing obligation to notify the Board of any such related matters in updated mandatory notices. *See* 37 C.F.R. § 42.8(a)(3), (b)(2).

[14] We do not reach Ground Two, because we have concluded claims 1–6, 8–20, and 23–31 each are unpatentable based on Ground One. *See supra* Section III.E.

FOR PETITIONER:

Andrew M. Mason
Cameron D. Clawson
Sarah E. Jelsema
Frank Morton-Park
KLARQUIST SPARKMAN LLP
andrew.mason@klarquist.com
cameron.clawson@klarquist.com
sarah.jelsema@klarquist.com
frank.morton-park@klarquist.com

FOR PATENT OWNER:

Ari. J. Jaffess
Ronald Abramson
M. Michael Lewis
Gina K. Kim
LISTON ABRAMSON LLP
ari.jaffess@listonabramson.com
ron.abramson@listonabramson.com
michael.lewis@listonabramson.com
gina.kim@listonabramson.com

Rowan P. Smith
MESSNER REEVES LLP
rsmith@messner.com