US011465005B2

(12) **United States Patent**
Bayerlein et al.

(10) **Patent No.: US 11,465,005 B2**
(45) **Date of Patent: *Oct. 11, 2022**

(54) **MANUALLY POWERED TREADMILL**

(71) Applicant: **Woodway USA, Inc.**, Waukesha, WI (US)

(72) Inventors: **Douglas G. Bayerlein**, Oconomowoc, WI (US); **Vance E. Emons**, Hartland, WI (US); **Nicholas A. Oblamski**, Waukesha, WI (US); **Scott D. Hoerig**, Brookfield, WI (US); **Matthew J. Zank**, Milwaukee, WI (US); **Robert L. Zimpel**, Menomonee Falls, WI (US); **Joel W. Richards**, Wauwatosa, WI (US)

(73) Assignee: **Woodway USA, Inc.**, Waukesha, WI (US)

(*) Notice: Subject to any disclaimer, the term of this patent is extended or adjusted under 35 U.S.C. 154(b) by 110 days.

This patent is subject to a terminal disclaimer.

(21) Appl. No.: **17/247,101**

(22) Filed: **Nov. 30, 2020**

(65) **Prior Publication Data**

US 2021/0077846 A1 Mar. 18, 2021

Related U.S. Application Data

(63) Continuation of application No. 16/792,444, filed on Feb. 17, 2020, now Pat. No. 10,850,150, which is a (Continued)

(51) **Int. Cl.**
A63B 21/005 (2006.01)
A63B 22/00 (2006.01)
(Continued)

(52) **U.S. Cl.**
CPC ***A63B 21/0053*** (2013.01); ***A63B 21/0054*** (2015.10); ***A63B 21/0055*** (2015.10);
(Continued)

(58) **Field of Classification Search**
CPC A63B 22/02–0228; A63B 22/0285–0292
See application file for complete search history.

(56) **References Cited**

U.S. PATENT DOCUMENTS

8,308 A 8/1851 Seymour
26,914 A 1/1860 Meldrum
(Continued)

FOREIGN PATENT DOCUMENTS

CN 3201120 9/2001
CN 2860541 1/2007
(Continued)

OTHER PUBLICATIONS

U.S. Appl. No. 05/616,951, filed Sep. 26, 1975, Schonenberger.
(Continued)

Primary Examiner — Jennifer Robertson
(74) *Attorney, Agent, or Firm* — Foley & Lardner LLP

(57) **ABSTRACT**

A treadmill includes a frame; a rotatable element coupled to the frame; a running belt at least partially supported by the rotatable element; and, a first element and a second element, both of which are coupled to the running belt. The running belt includes a running surface, at least a portion of which is curved. Further, one of the first and second elements and the running belt freely rotate in a first direction of rotation relative to the frame. However, in a second direction of rotation, opposite the first direction of rotation, the one of the first and second elements is substantially prevented from rotation relative to the frame to substantially prevent or resist rotation of the running belt relative to the frame.

17 Claims, 20 Drawing Sheets

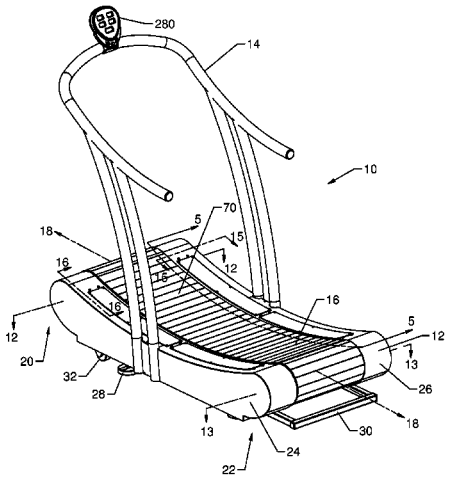

Related U.S. Application Data

continuation of application No. 15/957,721, filed on Apr. 19, 2018, now Pat. No. 10,561,883, which is a continuation of application No. 14/832,708, filed on Aug. 21, 2015, now Pat. No. 10,265,566, which is a continuation of application No. 14/076,912, filed on Nov. 11, 2013, now Pat. No. 9,114,276, which is a continuation of application No. 13/235,065, filed on Sep. 16, 2011, now abandoned, which is a continuation-in-part of application No. PCT/US2010/027543, filed on Mar. 16, 2010.

(60) Provisional application No. 61/161,027, filed on Mar. 17, 2009.

(51) **Int. Cl.**
A63B 21/00 (2006.01)
A63B 22/02 (2006.01)
A63B 23/04 (2006.01)

(52) **U.S. Cl.**
CPC ***A63B 21/157*** (2013.01); ***A63B 22/0017*** (2015.10); ***A63B 22/0023*** (2013.01); ***A63B 22/02*** (2013.01); ***A63B 22/0235*** (2013.01); ***A63B 22/0285*** (2013.01); ***A63B 23/04*** (2013.01); *A63B 2230/06* (2013.01); *A63B 2230/75* (2013.01)

(56) **References Cited**

U.S. PATENT DOCUMENTS

83,844 A 11/1868 Goucher
104,534 A 6/1870 Ashe
111,018 A 1/1871 Thompson
118,030 A 8/1871 Loveghove et al.
144,224 A 11/1873 Potter
144,225 A 11/1873 Purple
171,353 A 12/1875 Conway
179,789 A 7/1876 Hedges
219,439 A 9/1879 Blend
254,293 A 2/1882 Edleblute et al.
314,674 A 3/1885 Hubbard
374,811 A 12/1887 Savage
411,986 A 10/1889 Frazeur et al.
641,424 A 1/1900 Taitel et al.
759,296 A 5/1904 Morairty
767,221 A 8/1904 Hagen
783,769 A 2/1905 Wright
931,394 A 8/1909 Day
1,016,729 A 2/1912 Barrett
1,211,765 A 1/1917 Schmidt
2,117,957 A 5/1938 Heller
2,399,915 A 5/1946 Drake
2,512,911 A 6/1950 Benice
2,842,365 A 7/1958 Kelley
3,637,206 A 1/1972 Chickering, III
3,642,279 A * 2/1972 Cutter A63B 22/02 482/54
3,728,261 A 4/1973 Mitacek
3,870,297 A 3/1975 Elder
3,968,543 A 7/1976 Shino et al.
4,334,676 A * 6/1982 Schonenberger A63B 22/02 482/54
4,389,047 A 6/1983 Hall
4,406,451 A 9/1983 Gaetano
4,544,152 A 10/1985 Taitel
4,548,405 A 10/1985 Lee et al.
4,576,352 A 3/1986 Ogden
4,614,337 A 9/1986 Schonenberger
4,635,928 A 1/1987 Ogden et al.
4,659,074 A 4/1987 Taitel et al.
4,726,581 A 2/1988 Chang
4,886,266 A 12/1989 Trulaske
4,938,469 A 7/1990 Crandell
5,018,343 A 5/1991 Finke
5,031,901 A 7/1991 Saarinen
5,044,470 A 9/1991 Nicholas
5,094,447 A 3/1992 Wang
5,145,480 A 9/1992 Wang
5,162,988 A 11/1992 Semerau et al.
D333,887 S 3/1993 Dowler
5,242,339 A 9/1993 Thornton
5,290,205 A 3/1994 Densmore et al.
5,310,392 A 5/1994 Lo
5,318,487 A 6/1994 Golen et al.
5,368,532 A 11/1994 Farnet
5,378,213 A 1/1995 Quint
5,411,279 A 5/1995 Magid
5,411,455 A 5/1995 Haber et al.
5,431,612 A 7/1995 Holden
5,470,293 A 11/1995 Schonenberger
5,492,517 A * 2/1996 Bostic A63B 21/157 482/110
5,538,489 A * 7/1996 Magid A63B 22/0292 482/69
5,575,740 A 11/1996 Piaget et al.
5,577,598 A 11/1996 Schoenenberger
5,607,376 A 3/1997 Magid
5,643,144 A 7/1997 Trulaske
5,669,856 A 9/1997 Liu
5,683,332 A 11/1997 Watterson et al.
5,688,209 A 11/1997 Trulaske et al.
5,709,632 A 1/1998 Socwell
5,856,736 A 1/1999 Rotunda et al.
5,887,579 A 3/1999 Eriksson et al.
5,891,830 A 4/1999 Koltermann et al.
5,897,461 A 4/1999 Socwell
6,042,514 A 3/2000 Abelbeck
6,053,848 A 4/2000 Eschenbach
6,056,072 A 5/2000 Koltermann et al.
6,095,952 A 8/2000 Ali et al.
6,146,315 A 11/2000 Schonenberger
6,152,854 A 11/2000 Carmein
6,180,210 B1 1/2001 Debus
6,328,676 B1 12/2001 Alessandri
6,334,836 B1 1/2002 Segasby
6,334,839 B1 1/2002 Lim et al.
6,348,025 B1 2/2002 Schonenberger
6,454,679 B1 9/2002 Radow
6,468,189 B2 10/2002 Alessandri
6,500,097 B1 12/2002 Hall
6,616,578 B2 9/2003 Alessandri
6,652,424 B2 11/2003 Dalebout
D484,554 S 12/2003 Hellman et al.
6,740,009 B1 5/2004 Hall
6,761,667 B1 7/2004 Cutler et al.
6,824,502 B1 11/2004 Huang
6,837,830 B2 1/2005 Eldridge
6,893,382 B1 5/2005 Moon et al.
6,923,746 B1 8/2005 Skowronski et al.
6,958,032 B1 10/2005 Smith et al.
7,090,620 B1 8/2006 Barlow
7,115,073 B2 10/2006 Nizamuddin
7,179,205 B2 2/2007 Schmidt
D562,416 S 2/2008 Fedriga et al.
D566,209 S 4/2008 Alessandri et al.
7,410,449 B2 8/2008 Yeh
7,560,822 B1 7/2009 Hoffmann
7,608,023 B2 10/2009 Casagrande
7,618,345 B2 11/2009 Corbalis et al.
7,704,191 B2 4/2010 Smith et al.
7,717,828 B2 5/2010 Simonson et al.
7,780,573 B1 8/2010 Carmein
7,789,800 B1 9/2010 Watterson et al.
7,806,805 B2 10/2010 Barufka et al.
7,837,596 B2 11/2010 Astilean
7,862,483 B2 1/2011 Hendrickson et al.
8,007,408 B1 8/2011 Moran et al.
8,007,422 B2 8/2011 Zaccherini
8,075,450 B2 12/2011 Fabbri et al.
8,206,269 B2 6/2012 Fabbri et al.
8,241,187 B2 8/2012 Moon et al.

(56) **References Cited**

U.S. PATENT DOCUMENTS

8,308,619	B1	11/2012	Astilean
D672,827	S	12/2012	Alessandri et al.
8,343,016	B1	1/2013	Astilean
D682,372	S	5/2013	Alessandri et al.
8,496,566	B2	7/2013	Casadei
8,512,209	B2	8/2013	Guidi et al.
8,585,561	B2	11/2013	Watt et al.
8,676,170	B2	3/2014	Porrati et al.
8,690,738	B1	4/2014	Astillian
8,734,300	B2	5/2014	Piaget et al.
8,864,627	B2	10/2014	Bayerlein et al.
8,876,668	B2	11/2014	Hendrickson et al.
8,920,347	B2	12/2014	Bayerlein et al.
8,986,169	B2	3/2015	Bayerlein et al.
9,005,085	B2	4/2015	Astilean
9,039,580	B1	5/2015	Bayerlein et al.
9,044,635	B2	6/2015	Lull
D736,866	S	8/2015	Oblamski et al.
9,192,810	B2	11/2015	Beard et al.
9,216,316	B2	12/2015	Bayerlein et al.
9,233,272	B2	1/2016	Villani et al.
9,254,409	B2	2/2016	Dalebout et al.
D751,156	S	3/2016	Tasca et al.
9,305,141	B2	4/2016	Fabrizio
9,314,667	B2	4/2016	Puerschel
9,352,188	B2	5/2016	Astilean
9,429,511	B1	8/2016	Kannel
9,498,696	B1	11/2016	Razon
9,595,855	B2	3/2017	Asai et al.
D788,792	S	6/2017	Alessandri et al.
9,694,234	B2	7/2017	Dalebout et al.
9,713,742	B2	7/2017	Pasini et al.
9,824,110	B2	11/2017	Giudici et al.
9,914,015	B2	3/2018	Astilean et al.
9,956,450	B2	5/2018	Bayerlein et al.
9,974,997	B2	5/2018	Cei
D820,362	S	6/2018	Citterio
10,010,748	B1	7/2018	Weinstein et al.
D827,058	S	8/2018	Lisi et al.
10,143,884	B2	12/2018	Cei
D837,312	S	1/2019	Lisi et al.
10,183,191	B2	1/2019	Astilean et al.
10,293,204	B2	5/2019	Astilean et al.
10,478,666	B2	11/2019	Yoo
10,561,883	B2 *	2/2020	Bayerlein A63B 23/04
10,561,884	B2 *	2/2020	Bayerlein A63B 21/157
10,850,150	B2 *	12/2020	Bayerlein A63B 21/157
11,179,589	B2 *	11/2021	Bayerlein A63B 22/0235
2001/0018917	A1	9/2001	Brain
2002/0147079	A1	10/2002	Kalnbach
2003/0148853	A1	8/2003	Alessandri et al.
2003/0186787	A1	10/2003	Wu et al.
2004/0018917	A1	1/2004	Corbalis et al.
2004/0077465	A1	4/2004	Schmidt
2004/0097341	A1	5/2004	Alessandri et al.
2004/0241631	A1	12/2004	Nizamuddin
2004/0242631	A1	12/2004	Garlich et al.
2004/0244521	A1	12/2004	Russ et al.
2005/0009668	A1	1/2005	Savettiere et al.
2005/0202936	A1	9/2005	Ota
2005/0209059	A1	9/2005	Crawford et al.
2005/0272562	A1	12/2005	Alessandri et al.
2006/0003871	A1	1/2006	Houghton et al.
2006/0003872	A1	1/2006	Chiles et al.
2006/0122035	A1	6/2006	Felix
2006/0287165	A1	12/2006	Pasqualin
2007/0021278	A1	1/2007	Pan et al.
2007/0027001	A1	2/2007	Alessandri et al.
2007/0054781	A1	3/2007	Blaylock
2007/0123396	A1	5/2007	Ellis
2007/0167289	A1	7/2007	Alessandri et al.
2007/0202995	A1	8/2007	Roman et al.
2007/0225130	A1	9/2007	Maffei et al.
2007/0298935	A1	12/2007	Badarneh et al.
2008/0015094	A1	1/2008	Casagrande
2008/0020907	A1	1/2008	Lin
2008/0026914	A1	1/2008	Chen et al.
2008/0119332	A1	5/2008	Roman
2008/0132385	A1	6/2008	Alessandri et al.
2008/0287266	A1	11/2008	Smith
2009/0062165	A1	3/2009	Denis et al.
2009/0105047	A1	4/2009	Guidi et al.
2009/0156363	A1	6/2009	Guidi et al.
2009/0170666	A1	7/2009	Chiang
2009/0215589	A1	8/2009	Schoenenberger
2009/0280960	A1	11/2009	Tian
2010/0087298	A1	4/2010	Zaccherini
2010/0216607	A1	8/2010	Mueller
2010/0222182	A1	9/2010	Park
2011/0027549	A1	2/2011	Boutaghou
2011/0048809	A1	3/2011	Duckworth et al.
2011/0266091	A1	11/2011	Taylor
2011/0275497	A1	11/2011	Lorusso
2011/0306527	A1	12/2011	Bouffet et al.
2012/0010048	A1	1/2012	Bayerlein et al.
2012/0010053	A1	1/2012	Bayerlein et al.
2012/0019973	A1	1/2012	Ehrmantraut et al.
2012/0149613	A1	6/2012	David et al.
2012/0157267	A1	6/2012	Lo
2012/0231934	A1	9/2012	Lo
2012/0264569	A1	10/2012	Escobedo et al.
2012/0270705	A1	10/2012	Lo
2013/0256064	A1	10/2013	Bongaerts et al.
2014/0011642	A1	1/2014	Astilean
2014/0080679	A1	3/2014	Bayerlein et al.
2014/0087922	A1	3/2014	Bayerlein et al.
2014/0171272	A1	6/2014	Hawkins et al.
2014/0239760	A1	8/2014	Asai et al.
2015/0119202	A1	4/2015	Hendrickson et al.
2015/0157895	A1	6/2015	Bettini
2015/0210348	A1	7/2015	Astilean
2015/0306456	A1	10/2015	Pasini et al.
2015/0352400	A1	12/2015	Bayerlein et al.
2015/0367175	A1	12/2015	Alessandri et al.
2016/0023039	A1	1/2016	Cei
2016/0096064	A1	4/2016	Gatti
2016/0144224	A1	5/2016	Dalebout et al.
2016/0144225	A1	5/2016	Dalebout et al.
2016/0166877	A1	6/2016	Cei et al.
2016/0263429	A1	9/2016	Wagner
2016/0296789	A1	10/2016	Astilean et al.
2016/0367851	A1	12/2016	Astilean et al.
2017/0007886	A1	1/2017	Alessandri
2017/0113093	A1	4/2017	Bellavista et al.
2017/0128769	A1	5/2017	Long et al.
2017/0182356	A1	6/2017	Cei et al.
2017/0274248	A1	9/2017	Brown et al.
2017/0312582	A1	11/2017	Root, Jr.
2018/0014755	A1	1/2018	Alessandri et al.
2018/0104534	A1	4/2018	Erkelenz et al.
2018/0111018	A1	4/2018	Lee
2018/0111023	A1	4/2018	Cei et al.
2018/0229065	A1	8/2018	Leonardi et al.
2019/0054344	A1	2/2019	Athey et al.
2019/0083843	A1	3/2019	Del Monaco et al.
2019/0083844	A1	3/2019	Bayerlein et al.
2019/0118030	A1	4/2019	Yoo
2019/0168067	A1	6/2019	Bates et al.
2019/0314674	A1	10/2019	Chen
2019/0374811	A1	12/2019	Bayerlein et al.
2020/0171353	A1	6/2020	Fima
2020/0179789	A1	6/2020	Fima
2020/0188760	A1	6/2020	Bandini et al.
2020/0215391	A1	7/2020	Paganelli et al.
2020/0254293	A1	8/2020	Bayerlein et al.

FOREIGN PATENT DOCUMENTS

CN	201006229	1/2008
CN	201030178	3/2008
CN	201333278	10/2009
CN	102309835 A	1/2012
DE	19922822 A1	12/2000
DE	10 2005 009 414	9/2006

(56) **References Cited**

FOREIGN PATENT DOCUMENTS

DE	20-2006-005995		9/2006
EP	1 466 651	A1	10/2004
GB	2 223 685	A	4/1990
JP	03-148743		6/1991
JP	3148743		2/2009
KR	2009007043		1/2009
KR	10-2016-0150084	A	12/2016
WO	WO-2009/014330	A1	1/2009
WO	WO-2010/057238	A2	5/2010
WO	WO-2010/107632		9/2010
WO	WO-2014/160057		10/2014
WO	WO-2016/163680	A1	10/2016

OTHER PUBLICATIONS

U.S. Appl. No. 08/152,177, filed Nov. 12, 1993, Schonenberger et al.
U.S. Appl. No. 61/280,265, filed Nov. 2, 2009, Astilean, Aurel A.
Andrews et al., The Effect of An 80-Minute Intermittent Running Protocol on Hamstrings Strength Abstract, NSCA Presentation, Jul. 15, 2006, 1 page.
Answer to Counterclaims filed Nov. 14, 2014 between *Speedfit LLC and Aurel Astilean* versus *Woodway USA, Inc.,* 8 pages.
Astilean, Alex, YouTube Video entitled "SpeedFit—Speedboard—First Curve Prototype" retrieved from the internet at: https://www.youtube.com/watch?v=dO9h-F-JVCU on Apr. 6, 2015, 49 pages of screenshots.
Baldor, AC Servo Control Installation and Operating Manual, MN766, 2007, 247 pages.
Baldor, Series 23H, AC Servo Control Operating Manual, 1999, 138 pages.
Biodex Medical Systems, Inc., "The Biodex RTM Rehabilitation Treadmill Operation Manual", believed to have published 2002, 48 pages.
Brughelli et al., Effects of Running Velocity on Running Kinetics and Kinematics, Journal of Strength and Conditioning Research, Apr. 2011, 7 pages.
Buchheit et al., "Assessing Stride Variables and Vertical Stiffness with GPS-Embedded Accelerometers: Preliminary Insights for Monitoring of Neuromuscular Fatigue on the Field", Dec. 2015.
Chapco, Inc. and Samsara Fitness LLC's notice pursuant to 34 U.S.C. §282, Case 3:15-CV-01665-JCH, Document 310, filed Sep. 14, 2018, 4 pps.
Claim Construction Order, *Speedfit LLC and Aurel A. Astilean* v. *Woodway USA, Inc.,* Docket No. 2:13-cv-01276-KAM-AKT, Nov. 20, 2017, 23 pages.
Complaint for Declaratory Judgment of Patent Invalidity and Correction of Inventorship, *Woodway USA, Inc.* v. *Aurel A. Astilean,* Civ. Dkt. No. 2:13-cv-00681-WEC (E.D. WI), Jun. 13, 2013, 6 pages.
Coolthings, "Woodway EcoMill: A Non-Motorized Treadmill with Electronic Displays", Jun. 4, 2009, https://www.coolthings.com/woodway-ecomill-a-non-motorized-treadmill-with-electronic-displays/, 1 page.
Curvature, http://en.wikipedia.org/wiki/Curvature, Mar. 3, 2010, 1 page.
Decision and Order Denying Defendant's Motion to Dimiss or to Transfer and Staying Case Pending Decision from Eastern District New York District Court, *Woodway USA, Inc.* v. *Aurel A. Astilean,* Civ. Dkt. No. 2:13-cv-00681-WEC (E.D. WI), Dec. 18, 2013, 7 pages.
Declaration of Aurel A. Astilean filed Jun. 15, 2015 between *Speedfit LLC and Aurel Astilean* versus *Woodway USA, Inc.* and Exhibit A.
Declaration of Aurel A. Astilean, *Speedfit LLC and Aurel A. Astilean* v. *Woodway USA, Inc.,* Docket No. 2:17-cv-00768-KAM-AKT, Exhibit 1, Mar. 26, 2018, 5 pages.
Declaration of Dan Bostan filed Jun. 15, 2015 between *Speedfit LLC and Aurel Astilean* versus *Woodway USA, Inc.* and Exhibit A.
Declaration or John F. Vodopia filed Jun. 6, 2017.
Declaration of John F. Vodopia in Further Support of Plaintiffs' Motion for Leave to Amend filed Jul. 7, 2015 and Exhibits A-C.
Declaration of John F. Vodopia In Support of Plaintiffs' motion for Leave to Amend filed Jul. 7, 2017 and Exhibits A-F.
Declaration of John F. Vodopia in Support of Plaintiffs' Motion Under 35 USC 256 to Correct Inventorship of U.S. Pat. No. 8,308,619 and U.S. Pat. No. 8,342,016 filed Jun. 15, 2015 between *Speedfit LLC and Aurel Astilean* versus *Woodway USA, Inc.* and Exhibits A-H.
Declaration of Kadie M. Jelenchickfiled Jul. 7, 2015 and Exhibits A-G.
Declaration of Kadie M. Jelenchick filed Jun. 15, 2015 and Exhibits A, B and E.
Declaration of Kadie M. Jelenchick filed Jun. 6, 2017.
Declaration of Matthew W. Peters, Case 2:13-cv-01276-KAM-AKT, Document 213, filed Aug. 8, 2018, 2 pps.
Declaration of Nicholas Oblamski filed Jun. 15, 2015, and Exhibit A, 11 pages.
Declaration of Nicholas Oblamski, *Speedfit LLC and Aurel A. Astilean* v. *Woodway USA, Inc.,* Docket No. 2:17-cv-00768-KAM-AKT, Exhibit 1, Mar. 26, 2018, 12 pages.
Declaration of Robert Giachetti, Case 3:15-CV-01665-JCH, Document 88-2, filed May 1, 2017, 20 pps., marked on its face as Exhibit 1.
Declaration of Thomas B. Decea filed Nov. 19, 2015 between *Speedfit LLC and Aurel Astilean* versus *Woodway USA, Inc.*
Defendant Woodway USA, Inc.'s responses and objections to plaintiffs' first set of interrogatories, Case 3:15-CV-01665-JCH, Document 254-22, 17 pps., marked on its face as Exhibit 22.
Discovery Channel, "Wreckreation Nation", Season 1, Episode 8, first aired Feb. 24, 2009, 9 pages of screenshot excerpts.
Docket Report, *Speedfit LLC and Aurel A. Astilean* v. *Douglas G. Bayerlain,* Civ. Dkt. No. 2:13-cv-01276-KAM-AKT (E.D.N.Y.), Dec. 19, 2013, 8 pages.
Docket Report, *Woodway USA, Inc.* v. *Aurel A. Astilean,* Civ. Dkt. No. 2:13-cv-00681-WEC (E.D. WI), Dec. 19, 2013, 3 pages.
EMS-Grivory Grivory GV-5H Black 9915 Nylon Copolymer, 50% Glass Fiber Filled, As Conditioned, believed to be publically available before Sep. 16, 2011, 2 pages.
Excerpt from U.S. Appl. No. 14/076,912, Exhibit F, *Speedfit LLC and Aurel A. Astilean* v. *Woodway USA, Inc.,* Docket No. 2:17-cv-00768-KAM-AKT, Mar. 26, 2018, 4 pages.
Expert report of Dr. Robert Giachetti, Case 3:15-CV-01665-JCH, Document 216-2, filed Apr. 5, 2018, 31 pps., marked on its face as Exhibit 2.
Expert report of James D. Whelan, P.E., report dated Aug. 26, 2015, Case 2:13-cv-01276-KAM-AKT, Document 212-2, filed Aug. 8, 2018, 19 pps., marked on its face as Exhibit 2.
Expert report of James D. Whelan, P.E., report dated Jul. 27, 2015, Case 2:13,cv-01276-KAM-AKT, Document 212-1, filed Aug. 8, 2018, 62 pps., marked on its face as Exhibit 1.
Expert report of James D. Whelan, P.E., report dated Jun. 12, 2018, 30 pps.
Expert report of James D. Whelan, P.E., report dated Sep. 28, 2018, 10 pps.
Expert Report of Kim B. Blair, Ph.D., Case 3:15-CV-01665-JCH, Document 254-7, filed Jun. 8, 2018, 135 pps., marked on its face as Exhibit 7.
First Amended Complaint (Jury Trial Demanded), *Speedfit LLC and Aurel A. Astilean* v. *Douglas G. Bayerlein,* Civ. Dkt. No. 2:13-cv-01276-KAM-AKT (E.D.N.Y.), Jun. 17, 2013, 16 pages.
First Amended Complaint filed Jun. 17, 2013 between *Speedfit LLC and Aurel Astilean* versus *Woodway USA, Inc.,* 16 pages.
Hall, The Rotary Treadwheel, available at least as early as Nov. 2011, 1 page.
HDT Expeditionary Systems, Inc., "KineAssist-MX Owner's Manual vG", 2015, 73 pages.
Hersher, Perfect Landing, http://news.harvard.edu/gazette/story/2010/01/different-strokes/, Jan. 27, 2010, 5 pages.
Hopker et al., Familiarisation and Reliability of Sprint Test Indices During Laboratory and Field Assessment, Journal of Sports Science and Medicine, Dec. 1, 2009, 5 pages.

(56) **References Cited**

OTHER PUBLICATIONS

http://www.gettyimages.com/detail/463782507, Animal treadmill c. 1872, Museum of Science and Industry, Chicago, 3 pps.
http://www.gettyimages.com/license/542395667, 1930 era treadmill, 1 page.
http://www.mpiwg-berlin.mpg.de/resrep00_01/Jahresbericht_2_2_section.html, 27 pps.
Integrated Performance Systems, LLC, Conditioning in a Professional Athlete Case Study, 2005, 1 page.
Integrated Performance Systems, LLC, Lower Extremity Rehabilitation & Assessment Case Study, 2005, 2 pages.
Integrated Performance Systems, LLC, Youth Athlete-Speed Training Case Study, 2005, 2 pages.
International Preliminary Report for Application No. PCT/US2010/026731, dated Sep. 29, 2011, 7 pages.
International Preliminary Report for Application No. PCT/US2010/027543, dated Sep. 29, 2011, 9 pages.
International Search Report and Written Opinion for Application No. PCT/US2010/026731, dated May 4, 2010, 8 pages.
International Search Report and Written Opinion for Application No. PCT/US2010/027543, dated May 12, 2010, 10 pages.
International Search Report and Written Opinion for International Application No. PCT/US2016/055572, dated Feb. 17, 2017, 9 pages.
International Search Report, PCT/US2017/040449, dated Oct. 11, 2017, 6 pages.
International Standard ISO 20957-6:2005(E), for Stationary training equipment—Part 6: Treadmills, additional specific safety requirements and test methods, First edition May 1, 2005, 18pps.
Introducing the New Force 3 Treadmill Advanced Analysis Package, www.fittech.com.au, believed to be publically available before Sep. 16, 2011, 3 pages.
Joint Disputed Claim filed Apr. 19, 2017 between *Speedfit LLC and Aurel Astilean* versus *Woodway USA, Inc.,* 10 pages.
Lieberman et al., Running Barefoot, Forefoot Striking & Training Tips, http://www.barefootrunning.fas.harvard.edu/5BarefootRunning&TrainingTips.html, Feb. 26, 2010, 5 pages.
Lieberman et al., Running Barefoot: Biomechanics of Foot Strike, http://www.barefootrunning.fas.harvard.edu/4BiomechanicsofFootStrike.html, Feb. 26, 2010, 6 pages.
Lieberman et al., Running Barefoot: Biomechanics of Foot Strikes & Applications to Running Barefoot or in Minimal Footwear, http://www.barefootrunning.fas.harvard.edu/index.html, Feb. 26, 2010, 2 pages.
Lieberman et al., Running Barefoot: FAQ, http://www.barefootrunning.fas.harvard.edu/6FAQ.html, Feb. 26, 2010, 3 pages.
Lieberman et al., Running Barefoot: Heel Striking & Running Shoes, http://www.barefootrunning.fas.harvard.edu/2FootStrikes&RunningShoes.html, Feb. 26, 2010, 2 pages.
Lieberman et al., Running Barefoot: Running Before the Modern Shoe, http://www.barefootrunning.fas.harvard.edu/3RunningBeforeTheModernShoe.html, Feb. 26, 2010, 4 pages.
Lieberman et al., Running Barefoot: Why Consider Foot Strike, http://www.barefootrunning.fas.harvard.edu/1WhyConsiderFootStrike.html, Feb. 26, 2010, 1 page.
Liszewski, Andrew, "EcoMill Treadmill Generates Its Own Power", Jun. 1, 2009, http://www.ohgizmo.com/2009/06/04/ecomill-treadmill-generates-its-own-power/, 1 page.
Memorandum and Order filed Dec. 28, 2016 between *Speedfit LLC and Aurel Astilean* versus *Woodway USA, Inc.,* 22 pages.
Memorandum and Order filed Oct. 10, 2014 between *Speedfit LLC and Aurel Astilean* versus *Woodway USA, Inc.,* 39 pages.
Memorandum and Order filed Oct. 19, 2015 between *Speedfit LLC and Aurel Astilean* versus *Woodway USA, Inc.,* 11 pages.
Memorandum of Law in Support of Plaintiffs' Motion for Leave to Amend the Second Amended Complaint filed Jul. 7, 2015, 13 pages.
Memorandum of Law in Support of Plaintiffs' Motion Under 35 USC 256 to Correct Inventorship of U.S. Pat. No. 8,308,619 and U.S. Pat. No. 8,342,016 between *Speedfit LLC and Aurel Astilean* versus *Woodway USA, Inc.,* 14 pages.
Minute Entry and Order for Markman Hearing, dated Jun. 13, 2018, 2 pps.
Minute Entry for Proceedings on Nov. 10, 2015 and Exhibit G.
Minute Order Regarding Claim Construction, *Speedfit LLC* v. *Woodway,* Docket No. 2:17-cv-00768-KAM-AKT, Jun. 13, 2018, 2 pages.
Mitsubishi Electric, Melservo-J2 Super Series: Servo Amplifier Instruction Manual, 2007, 402 pages.
Moody, The Effects Resisted Sprint Training on Speed, Agility and Power Production in Young Athletes, believed to be publically available before Dec. 31, 2006, 5 pages.
Motion to Dismiss filed Oct. 30, 2015 and Exhibits A-H.
NASA, "Combined Operational Load Bearing External Resistance Treadmill (COLBERT)", Aug. 2009, 3 pages.
NASA, "International Space Station: Combined Operational Load Bearing External Resistance Treadmill (COLBERT)", Jul. 19, 2017, https://www.nasa.gov/mission_pages/station/research/experiments/765.html, 4 pages.
NASA, "International Space Station: Do Tread on Me", Aug. 19, 2009, https://www.nasa.gov/mission_pages/station/behindscenes/colbert_feature.html, 2 pages.
NASA, "International Space Station: Treadmill with Vibration Isolation and Stabilization System (TVIS)", May 17, 2018, https://www.nasa.gov/mission_pages/station/research/experiments/976.html, 5 pages.
NASA, "Space Shuttle Mission STS-128: Racking Up New Science", Press Kit, August. 2009, 116 pages.
Nexus Resin Group, 10124 Antistat, believed to be publically available before Sep. 16, 2011, 2 pages.
Notice of Motion filed Jul. 7, 2015 between *Speedfit LLC and Aurel Astilean* versus *Woodway USA, Inc.,* 2 pages.
Notice of Motion Under 35 USC 256 to Correct Inventorship of U.S. Pat. No. 8,308,619 and U.S. Pat. No. 8,342,016 filed Jun. 15, 2015 between *Speedfit LLC and Aurel Astilean* versus *Woodway USA, Inc.,* 3 pages.
Notice of Woodway USA, Inc.'s Motion for Summary Judgment of Invalidity of U.S. Pat. No. 8,308,619 and U.S. Pat. No. 8,343,016 filed Jun. 5, 2017, 9 pages.
Notice of Woodway USA, Inc.'s motion to preclude the testimony of plaintiffs' technical expert James Whelan, Case 2:13-CV-01276-KAM-AKT, Document 211, filed Aug. 8, 2018, 3 pps.
Opening expert report of Dr. Robert Giachetti re: invalidity of U.S. Pat. No. 8,986,169 and U.S. Pat. No. 9,039,580, Case 3:15-CV-01665-JCH, Document 216-1, filed Apr. 5, 2018, 67 pps., marked on its face as Exhibit 1.
Order Denying Motion for Reconsideration (Doc. No. 248), dated Jun. 20, 2018, 12 pps.
OSHA 1926.307,9 pps.
Owners Manual for NordicTrack WalkFit Classic Treadmill, received on Mar. 2, 2017, 30 pps.
Owners Manual, Force 1, Nov. 29, 2007, 44 pages.
Owners Manual, Force 3, Jan. 28, 2009, 45 pages.
Owners Manual, The Force, Dec. 18, 2008, 68 pages.
Photographs of public display of Speedfit Speedboard by Woodway presented at IHRSA Tradeshow on Mar. 17, 2009, 8 pages.
Photographs produced to Woodway at least by Nov. 10, 2014 in litigation, *Speedfit LLC and Aurel A. Astilean* v. *Woodway USA, Inc.,* No. 2:13-cv-01276-KAM-AKT, 11 pages.
Plaintiff's memorandum in support of motion for summary judgment of non-infringement and invalidity on Claim 25 of U.S. Pat. No. 9,039,580, Case 3:15-CV-01665-JCH, Document 253, filed Jun. 8, 2018, 45 pps.
Plaintiff's Reply to Defendant Woodway's Answer, Affirmative Defenses and Counterclaims to Plaintiff's Second Amended Complaint filed Mar. 27, 2015, 6 pages.
Plantiff's Reply to Defendant Woodway's Answer, Affirmative Defenses and Counter-Claims to Plaintiffs' Supplemental Complaint filed Mar. 17, 2017, 8 pages.
Plaintiff's supplemental responses and objections to defendant's first set of interrogatories, Case 2:17-cv-00768-KAM-AKT, Document 38-3, filed Mar. 14, 2018, 22 pps., marked on its face as Exhibit C.

(56) **References Cited**

OTHER PUBLICATIONS

Plaintiffs Memorandum of Law in Opposition to Woodway's Motion for Summary Judgement of Invalidity and Opening Claim Construction Brief, Cross-Motion for Summary Judgment Upholding Validity, Cross-Motion for Summary Judgment for Infringement and Motion to Extend the Page Limitation for this Memorandum filed Jun. 6, 2017, 46 pages.
Plaintiffs' Initial Claims Construction Memorandum filed Jul. 31, 2017.
Plaintiffs' Local Rule 56(a)1 statement of undisputed material facts, Case 3:15-CV-01665-JCH, Document 254, filed Jun. 8, 2018, 14 pps.
Plaintiffs' Local Rule 56(a)2 statement of facts in opposition to summary judgment, Case 3:15-CV-01665-JCH, Document 265, filed Jun. 29, 2018, 17 pps.
Plaintiffs' Memorandum of Law in further Opposition to Defendant's Motion to Dismiss Certain of Plaintiffs' Claims filed Nov. 19, 2015, 19 pages.
Plaintiffs' memorandum of law in support of their motion for partial reconsideration, Case 3:15-CV-01665-JCH, Document 249, filed May 8, 2018, 9 pps.
Plaintiffs' motion for partial reconsideration, Case 3:15-CV-01665-JCH, Document 248, filed May 7, 2018, 3 pps.
Plaintiffs' motion for summary judgment of non-infringement and invalidity on Claim 25 of U.S. Pat. No. 9,039,580, Case 3:15-CV-01665-JCH, Document 252, 2 pps.
Plaintiffs' Opposition to Woodway USA, Inc.'s motion for summary judgment of infringement on Claim 25 of U.S. Pat. No. 9,039,580, Case 3:15-CV-01665-JCH, Document 264, filed Jun. 29, 2018, 35 pps.
Plaintiffs' preliminary invalidity contentions, Case 3:15-CV-01665-JCH, Document 254-16, filed Jun. 8, 2018, 205 pps., marked on its face as Exhibit 16.
Plaintiffs' preliminary non-infringement contentions, Case 3:15-cv-01165-JCH, Document 96-3, filed May 2, 2017, 56 pps.
Plaintiffs' Reply in Support of motion for partial reconsideration, Case 3:15-CV-01665-JCH, Document 251, filed May 29, 2018, 4 pps.
Plaintiffs' supplemental non-infringement contentions, Case 3:15-CV-01665-JCH, Document 98-8, filed May 2, 2017, 60 pps.
Plantar Fascia, http://en.wikipedia.org/wiki/Plantar_fascia, Mar. 3, 2010, 3 pages.
Rebuttal expert report of Kim B. Blair, Ph.D., Case 2:13-cv-01276-KAM-AKT, Document 213-3, filed Aug. 8, 2018, 24 pps., marked on its face as Exhibit C.
Rebuttal Expert Report of Kim B. Blair, Ph.D., Case 3:15-CV-01665-JCH, Document 254-15, 184 pps., marked on its face as Exhibit 15.
Reply in Opposition to D126 filed Nov. 6, 2015 and Exhibits A and B.
Reply Memorandum of Law in Further Support of Plaintiffs' Motion for Leave to Amend the Second Amended Complaint filed Jul. 7, 2015 between *Speedfit LLC and Aurel Astilean* versus *Woodway USA, Inc.,* 13 pages.
Response in Opposition re [117] First Motion to Amend Second Amended Complaint filed Jul. 7, 2015, 2 pages.
Response in Opposition to [110] Motion to Amend-Corret-Supplement filed Jun. 15, 2015, 2 pages.
Revised Answer to Counterclaims filed Dec. 12, 2014 between *Speedfit LLC and Aurel Astilean* versus *Woodway USA, Inc.,* 5 pages.
Ross et al., The Effects of Treadmill Sprint Training and Resistance Training on Maximal Running Velocity and Power, National Strength and Conditioning Association, Mar. 2009, 10 pages.
Rule 56.1 Counter-Statement by Plaintiffs Speedfit LLC, and Aurel A. Astilean filed Jun. 6, 2017, 13 pages.
Ruling Re: Plaintiffs' Motion for Summary Judgment of Non-infringement and Invalidity (Doc. No. 252) and Woodway's Motion for Summary Judgment of Infringement (Doc. No. 255), *Chapco, Inc. and Samsara Fitness, LLC* v. *Woodway USA, Inc.,* Docket No. 3:15-cv-01665-JCH, Jul. 24, 2018, 26 pages.
Sears, Roebuck and Co., 1986 Spring Summer Centennial Edition Catalog, Jan. 1, 1985, Curved Exerciser models 1 and 2 on pp. 496 and 497.
Second Amended Complaint filed Feb. 17, 2015 between *Speedfit LLC and Aurel Astilean* versus *Woodway USA, Inc.,* 18 pages.
Second Supplemental Expert Report of Kim B. Blair, PhD., Case 3:15-CV-01665-JCH, Document 254-3, 41 pps., marked on its face as Exhibit 3.
Sirotic et al., Physiological and Performance Test Correlates of Prolonged, High-Intensity, Intermittent Running Performance in Moderately Trained Women Team Sport Athletes, Journal of Strength and Conditioning Research, 2007, 7 pages.
Sirotic et al., The Reliability of Physiological and Performance Measures During Simulated Team-Sport Running on a Non-Motorised Treadmill, Journal of Science and Medicine in Sport, Apr. 11, 2007, 10 pages.
Soccer International, The Red Devil's in the Details, dated Jun. 2010, 4 pages.
Southern Research et al., "AIMTech Project Brief", Oct. 20, 2015, 2 pages.
Southern Research et al., "Resist Force-Induced Treadmill", 2 pages.
Speedfit LLC's Opening Claim Construction Brief, *Speedfit LLC and Aurel A. Astilean* v. *Woodway USA, Inc.,* Docket No. 2:17-cv-00768-KAM-AKT, Mar. 26, 2018, 9 pages.
Speedfit, video produced to Woodway at least by Apr. 28, 2015 in litigation, which is submitted herewith on DVD, *Speedfit LLC and Aurel A. Astilean* v. *Woodway USA, Inc.*
Speedfit, video produced to Woodway at least by Nov. 10, 2014 in litigation, *Speedfit LLC and Aurel A. Astilean* v. *Woodway USA, Inc.,* No. 2:13-cv-01276-KAM-AKT, 21 pages of screenshot excerpts.
Speedfit, video produced to Woodway at least by Nov. 10, 2014 in litigation, *Speedfit LLC and Aurel A. Astilean* v. *Woodway USA, Inc.,* No. 2:13-cv-01276-KAM-AKT, 23 pages of screenshot excerpts.
Supplemental Complaint filed Feb. 10, 2017 between *Speedfit LLC and Aurel Astilean* versus *Woodway USA, Inc.*
Supplemental Declaration of Kadie M. Jelenchick filed June 6.
Supplemental declaration of Matthew W. Peters, Case 2:13-cv-01276-KAM-AKT, Document 227, filed Aug. 8, 2018, 1 pg.
Supplemental Expert Report of Kim B. Blair, PhD., Case 3:15-CV-01665-JCH, Document 184-8, filed Mar. 16, 2018, 19 pps., marked on its face as Exhibit AA.
Supplemental rebuttal expert report of Dr. Robert Giachetti responsive to second supplemental expert report of Dr. Kim Blair dated Apr. 13, 2018, Case 3:15-CV-01665-JCH, Document 254-4, filed Jun. 8, 2018, 18 pps., marked on its face as Exhibit 4.
Supplemental rebuttal expert report of Dr. Robert Giachetti responsive to supplemental expert report of Dr. Kim Blair dated Mar. 15, 2018, dated May 14, 2018, 12 pps.
SV-M & SV-S Servies Servo Drive User Guide, 1998, 121 pages.
Tecmachine, "Sprint Club: User's Guide", believed to have published 2002, 33 pages.
The Australian Competition & Consumer Commission's Mandatory Safety Standard For Treadmills (Supplier Guide), 2009, 20 pps.
The Woodway Force Brochure, The Best Way to Train for Speed & Athletic Power, dated May 5, 2005, 2 pages.
Third Amended Complaint filed Oct. 23, 2015 between *Speedfit LLC and Aurel Astilean* versus *Woodway USA, Inc.* and Exhibits A-H.
Transcript of civil cause for evidentiary hearing before the Honorable Kiyo A. Matsumoto, United States District Judge, Case 2:13-cv-01276-KAM-AKT, Document 213-4, filed Aug. 8, 2018, 10 pps., marked on its face as Exhibit D.
Transcript of civil cause for evidentiary hearing before the Honorable Kiyo A. Matsumoto, United States District Judge, Case 2:13-cv-01276-KAM-AKT, Document 227-3, filed Aug. 8, 2018, 5 pps., marked on its face as Exhibit G.
Transcript of videotaped deposition of Alex Astilean taken Jul. 10, 2018 for Case 2:17-cv-00768-KAM-AKT, 75 pps.

(56) **References Cited**

OTHER PUBLICATIONS

Transcript of videotaped deposition of Dan Bostan, Case 2:13-cv-01276-KAM-AKT, Document 227-2, filed Aug. 8, 2018, 4 pps., marked on its face as Exhibit F.
Transcript of videotaped deposition of Speedfit LLC by Alex Astilean taken Jul. 10, 2018 for Case 2:17-cv-00768-KAM-AKT, 38 pps.
Video deposition transcript of James D. Whelan taken on Sep. 28, 2015, Case 2:13-cv-01276-KAM-AKT, Document 213-1, filed Aug. 8, 2018, 23 pps., marked on its face as Exhibit A.
Woodway USA, Inc., "Treadmill Owner's Manual", Oct. 2001, 56 pages.
Woodway USA, Inc., EcoMill Promotional Flyer, Oct. 18, 2011, 1 page.
Woodway USA, Inc., Owner's Manual: EcoMill Non-Motorized, Jun. 4, 2010, 35 pages.
Woodway USA, Inc.'s Amended Supplemental Counterclaims, Case 3:15-CV-01665-JCH, Document 309, filed Sep. 14, 2018, 28 pps.
Woodway USA, Inc.'s Answer, Affirmative Defenses, and Counterclaims to Plaintiffs' First Amended Complaint filed Oct. 24, 2014 and Exhibits 1 and 2.
Woodway USA, Inc.'s Answer, Affirmative Defenses, and Counterclaims to Plaintiffs' Second Amended Complaint filed Mar. 6, 2015, 17 pages.
Woodway USA, Inc.'s Answer, Affirmative Defenses, and Counterclaims to Plaintiffs' Supplemental Complaint filed Feb. 24, 2017, 18 pages.
Woodway USA, Inc.'s first supplemental responses and objections to plaintiff's first set of interrogatories (Nos. 1-7), Case 2:17-CV-00768-KAM-AKT, Document 38-1, filed Mar. 14, 2018, 18 pps., marked on its face as Exhibit A.
Woodway USA, Inc.'s List of Claim Terms to be Considered and Proposed Constructions, *Speedfit LLC and Aurel A. Astilean* v. *Woodway USA, Inc.,* Docket No. 2:17-cv-00768-KAM-AKT, Exhibit D, Mar. 26, 2018, 4 pages.
Woodway USA, Inc.'s local rule 56(a)1 statement of undisputed material facts in support of its motion summary judgment of infringement of U.S. Pat. No. 9,039,580, Case 3:15-CV-01665-JCH, Document 257, 8 pps.
Woodway USA, Inc.'s local rule 56(a)2 statement of facts in opposition to plaintiffs' motion for summary judgment, Case 3:15-CV-01665-JCH, Document 267, filed Jun. 29, 2018, 34 pps.
Woodway USA, Inc.'s Memorandum in response to Plaintiffs' Motion for Leave to Amend the Second Amended Complaint filed Jul. 7, 2015, 16 pages.
Woodway USA, Inc.'s Memorandum in Response to Plaintiffs' Motion Under 35 USC 256 to Correct Inventorship of U.S. Pat. No. 8,308,619 and U.S. Pat. No. 8,342,016 filed Jun. 15, 2015, 20 pages.
Woodway USA, Inc.'s memorandum in support of its motion to preclude the testimony of plaintiffs' technical expert James Whelan, Case 2:13-cv-01276-KAM-AKT, Document 212, filed Aug. 8, 2018, 37 pps.
Woodway USA, Inc.'s memorandum of law in opposition to plaintiffs' motion for summary judgment of non-infringement and invalidity of Claim 25 of U.S. Pat. No. 9,039,580, Case 3:15-CV-01665-JCH, Document 266, filed Jun. 29, 2018, 42 pps.
Woodway USA, Inc.'s Memorandum of Law in support of its motion for summary judgment of infringement of U.S. Pat. No. 9,039,580, Case 3:15-CV-01665-JCH, Document 256, 38 pps.
Woodway USA, Inc.'s Memorandum of Law in Support of Its Motions for Summary Judgment of Invalidity of U.S. Pat. No. 8,308,619 and U.S. Pat. No. 8,343,016 and Opening Claim Construction Brief filed Jun. 6, 2017, 38 pages.
Woodway USA, Inc.'s motion for summary judgment of infringement of U.S. Pat. No. 9,039,580, Case 3:15-CV-01665-JCH, Document 255, filed Jun. 8, 2018, 3 pps.
Woodway USA, Inc.'s Opening Claim Construction Brief, *Speedfit LLC and Aurel A. Astilean* v. *Woodway USA, Inc.,* Docket No. 2:17-cv-00768-KAM-AKT, Mar. 26, 2018, 15 pages.
Woodway USA, Inc.'s opposition to plaintiffs' motion for partial reconsideration, Case 3:15-CV-01665-JCH, Document 250, filed May 14, 2018, 19 pps.
Woodway USA, Inc.'s Patents, *Speedfit LLC and Aurel A. Astilean* v. *Woodway USA, Inc.,* Docket No. 2:17-cv-00768-KAM-AKT, Exhibit B, Mar. 26, 2018, 3 pages.
Woodway USA, Inc.'s Reply Claim Construction Brief, *Speedfit LLC and Aurel A. Astilean* v. *Woodway USA, Inc.,* Docket No. 2:17-cv-00768-KAM-AKT, Mar. 26, 2018, 9 pages.
Woodway USA, Inc.'s reply memorandum in further support of its motion to preclude the testimony of Plaintiffs' technical expert James Whelan, Case 2:13-cv-01276-KAM-AKT, Document 226, filed Aug. 8, 2018, 16 pps.
Woodway USA, Inc.'s Reply Memorandum in Support of Its Motion to Dismiss filed Nov. 25, 2015, 24 pages.
Woodway USA, Inc.'s Responsive Claim Construction Brief filed Jul. 28, 2017, 19 pages.
Woodway, "Curve Trainer", Sep. 2, 2020, https://www.woodway.com/products/curve-trainer/, p. 1.
Woodway, "Introducing the All New EcoMill Self Powered", published to YouTube on Mar. 25, 2010, https://www.youtube.com/watch?v=NcPH92DAArc.
Woodway, Curve 3.0 Specification, May 25, 2011, 1 page.
Woodway, Curve Specification, May 24, 2011, 1 page.
Woodway, Curve Specification, May 25, 2011, 1 page.
Woodway, Curve XL Specification, May 18, 2011, 1 page.
Woodway, Force Specification, Apr. 8, 2008, 1 page.
Woodway, Force Specification, May 2, 2011, 1 page.
Woodway, Force Specification, May 2, 2012, 1 page.
Woodway's USA, Inc.'s Reply in Support of its Motion for Summary Judgment of Invalidity of U.S. Pat. No. 8,308,619 and U.S. Pat. No. 8,343,016 and Reply Claim Construction Brief filed Jun. 6, 2017, 16 pages.
Woodway's Opposition to Defendant's Notice of Motion and Motion to Dismiss Case and Transfer Litigation to EDNY, *Woodway USA, Inc.* v. *Aurel A. Astilean,* Civ. Dkt. No. 2:13-cv-00681-WERC (E.D. WI), Oct. 18, 2013, 22 pages.
Woodways USA, Inc.'s Supplemental Rule 56.1 Statement of Undisputed Material Facts and Responses to Rule 56.1 Counterstatement by Plaintiffs Speedfit LLC and Aurel A. Astilean filed Jun. 6, 2017, 20 pages.
Woodway, "The Woodway LOKO Owners Manual", S55-70 E Standard Manual, Sep. 26, 2006, 47 pages.

* cited by examiner

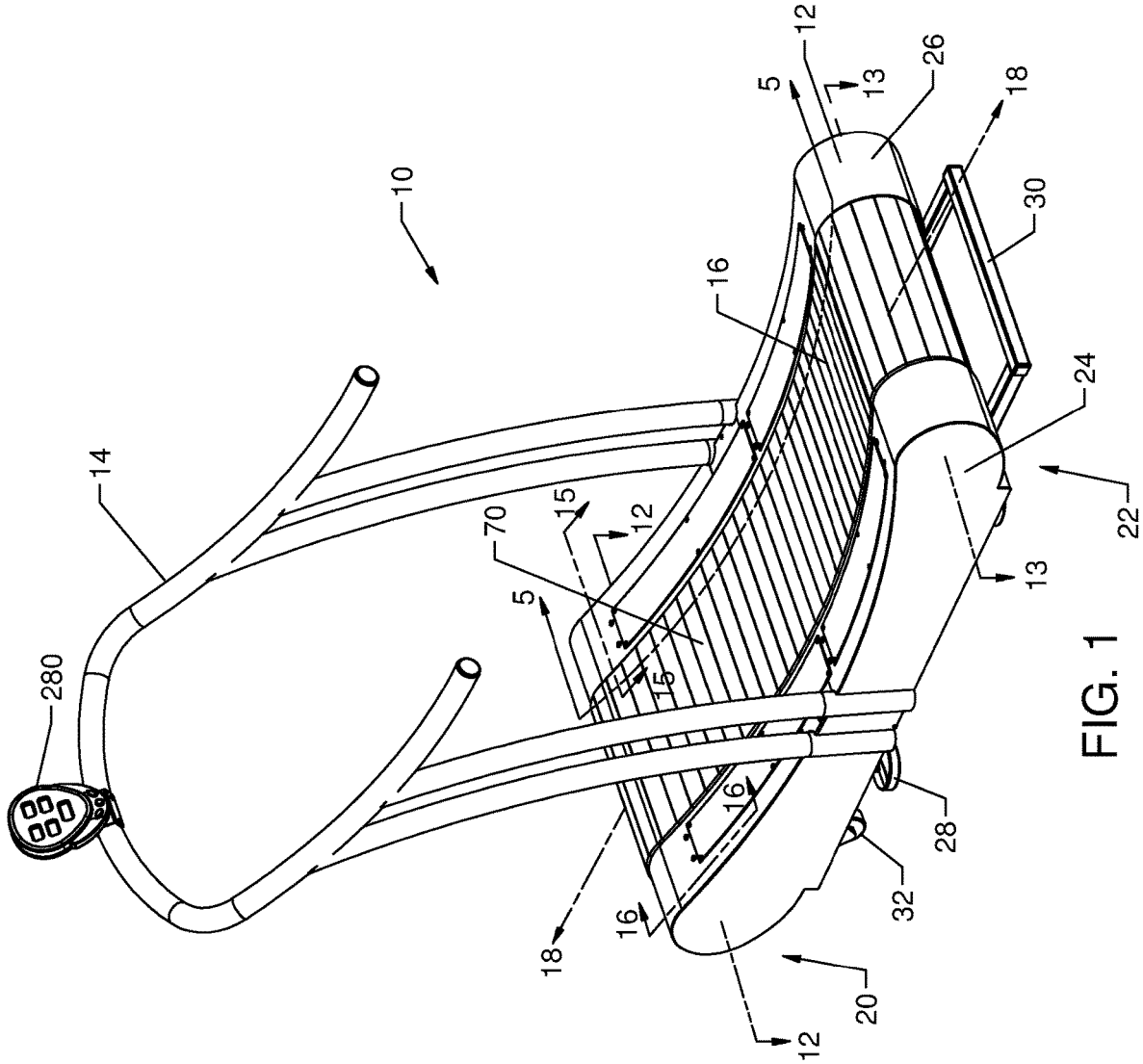

FIG. 1

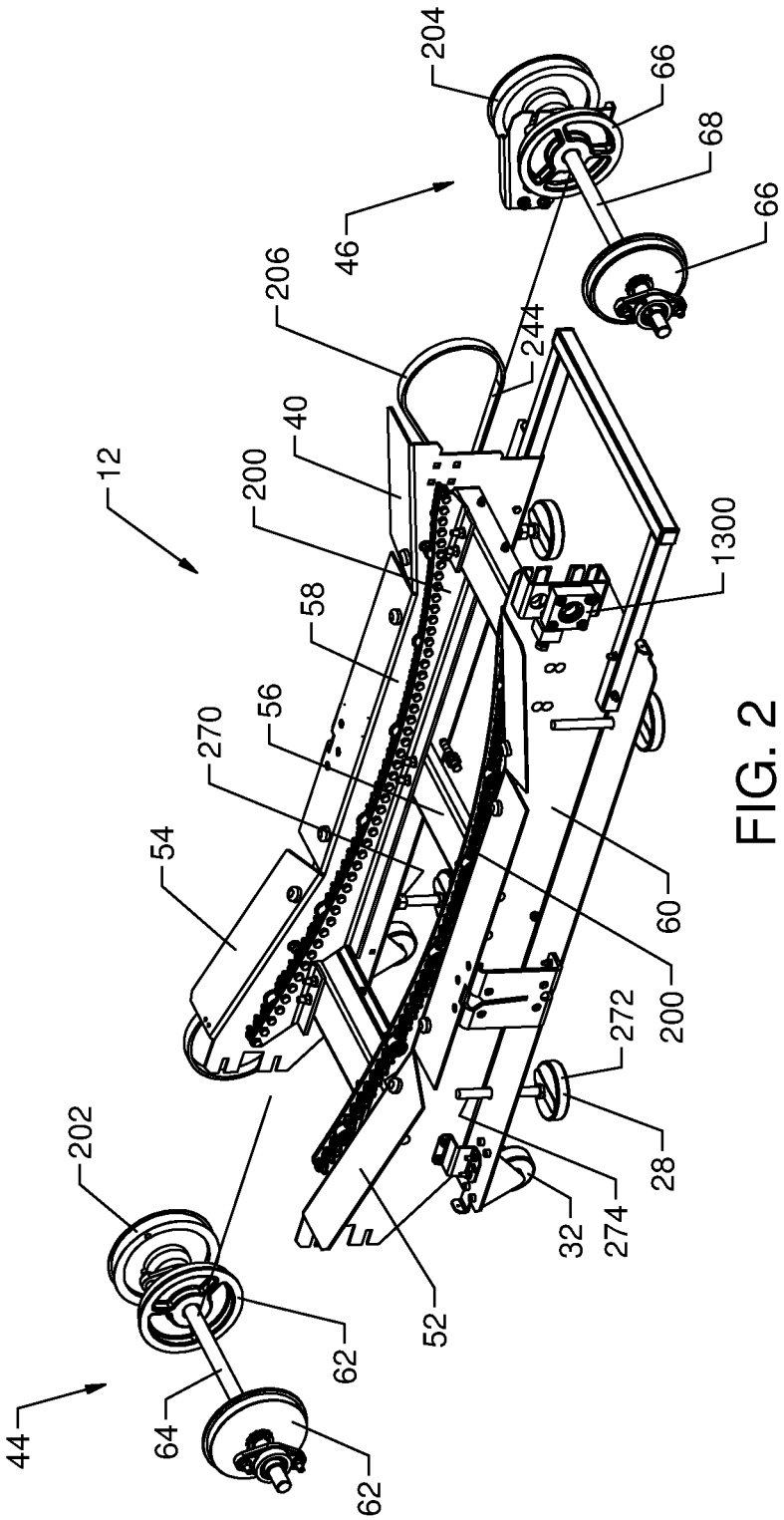
12
44
46
52
54
56
58
60
62
62
64
66
66
68
200
200
202
204
206
244
270
272
274
28
32
40
1300

FIG. 2

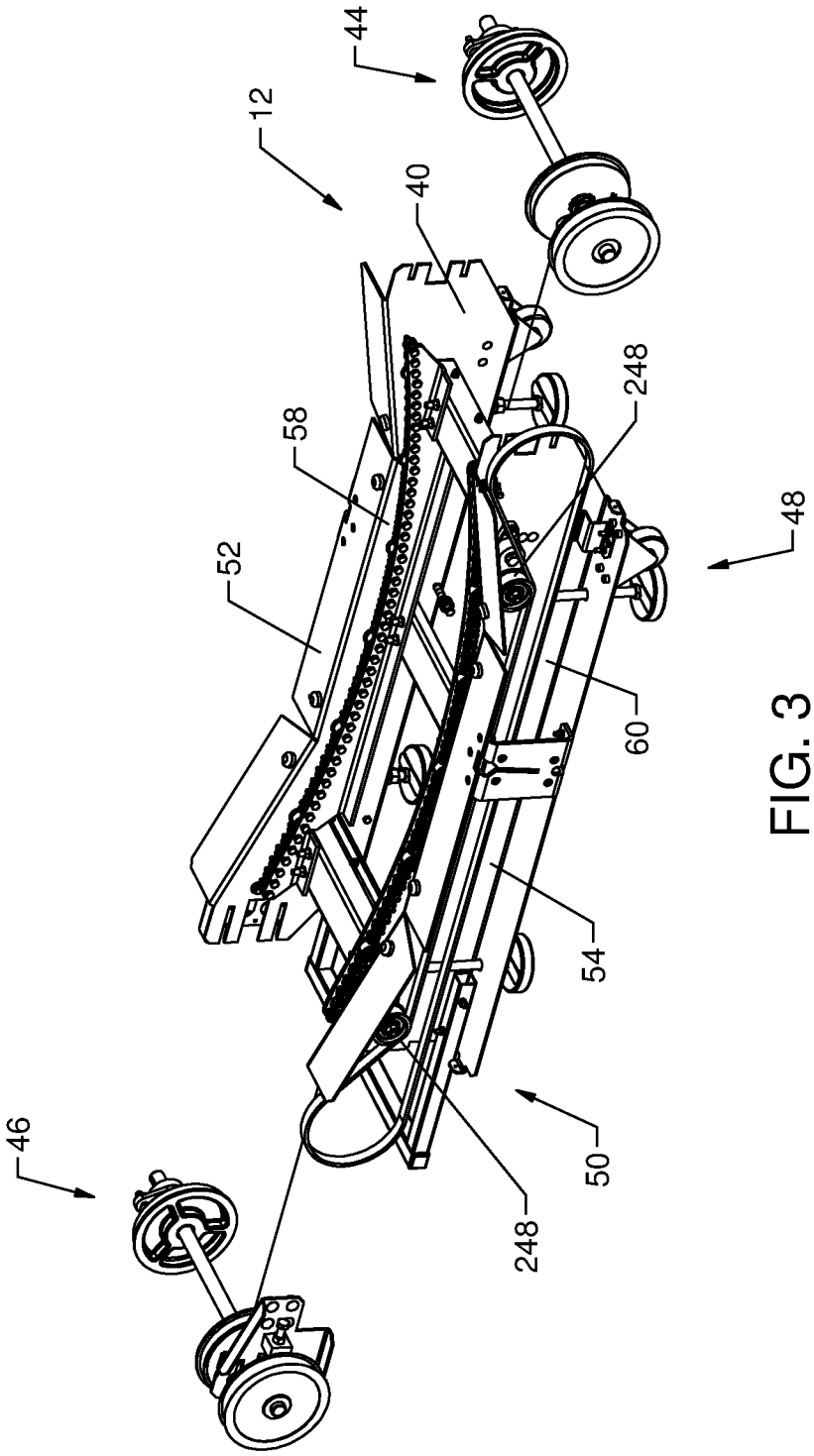

FIG. 3

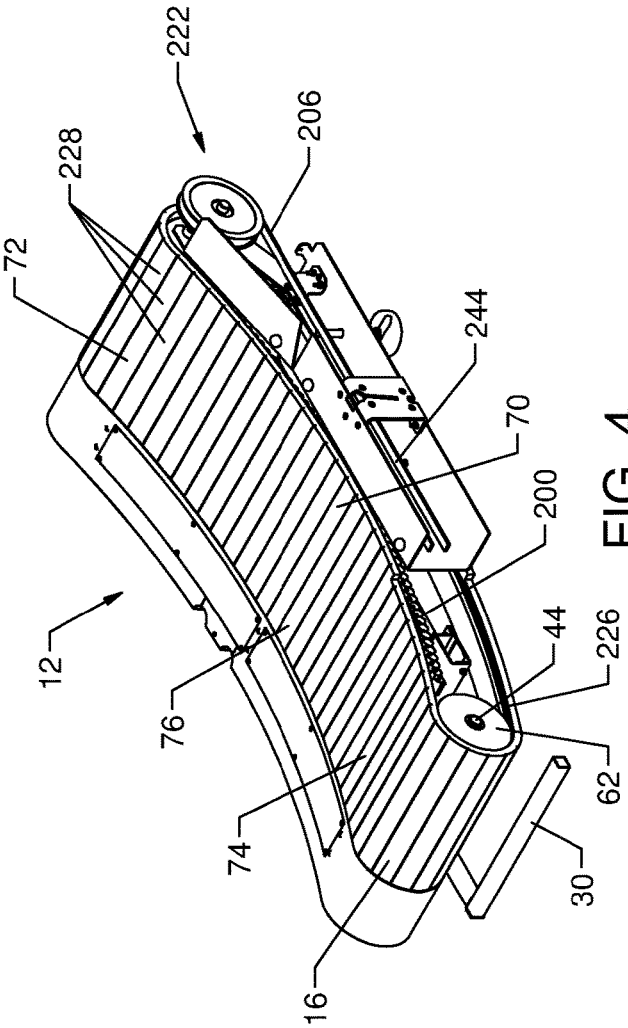
222
228
206
72
244
70
200
12
44
226
76
62
74
30
16

FIG. 4

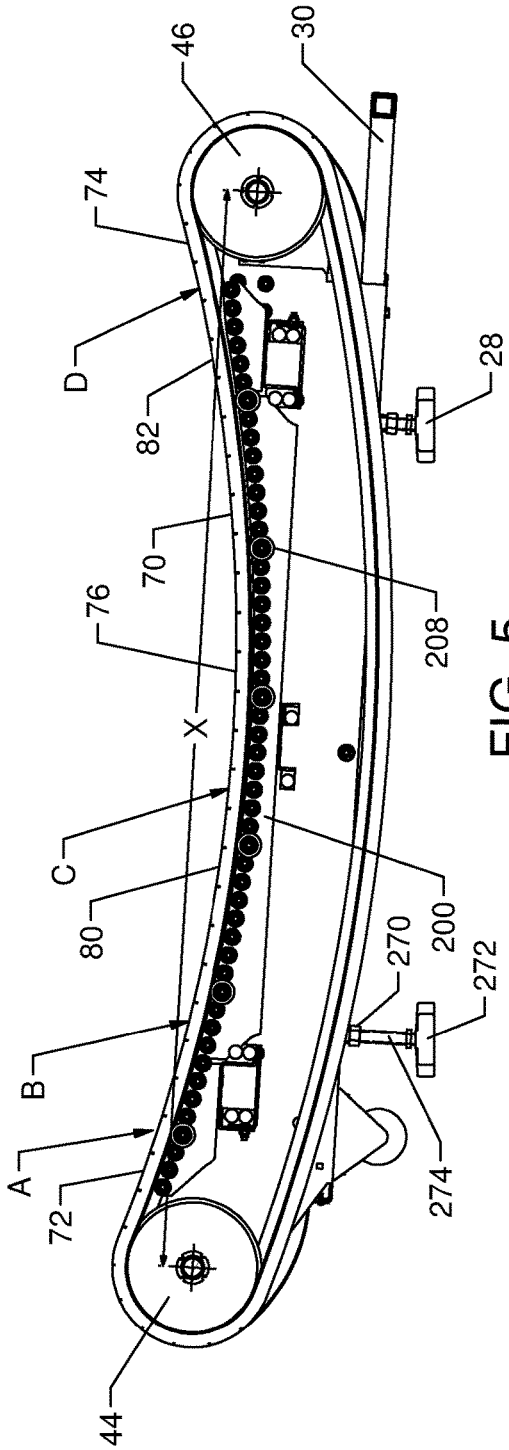
46
30
74
D
28
82
70
208
76
X
C
200
80
270
272
B
A
72
274
44

FIG. 5

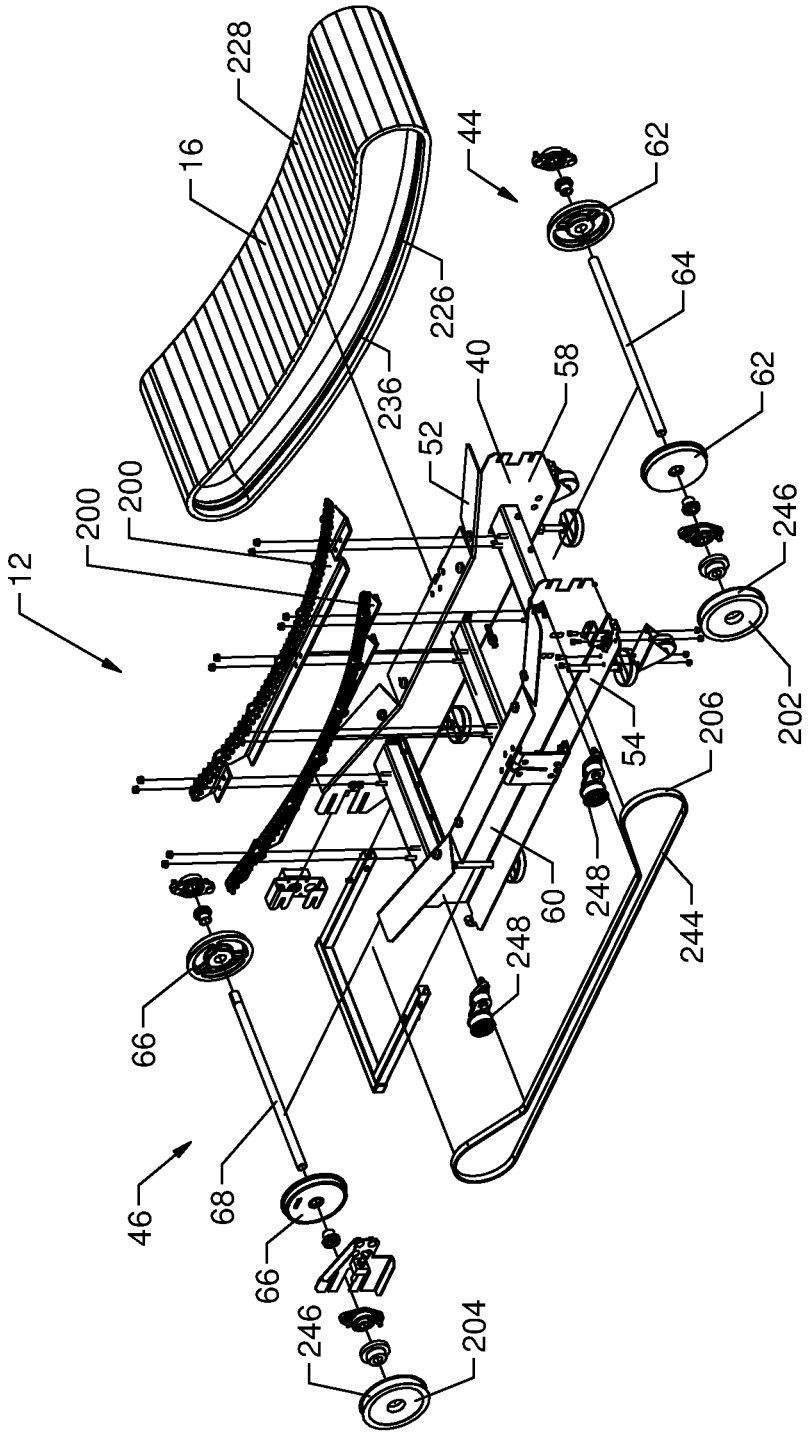
228
16
44
62
64
226
236
40
58
62
52
200
200
246
12
202
54
206
248
60
244
248
66
68
46
66
246
204

FIG. 6

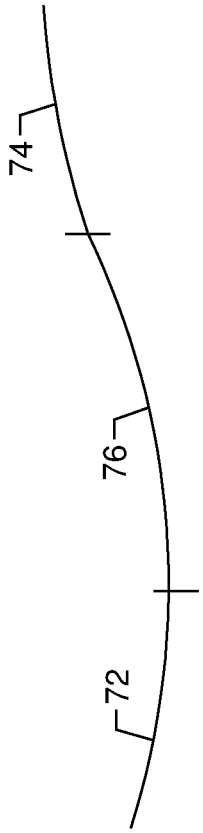

FIG. 7a

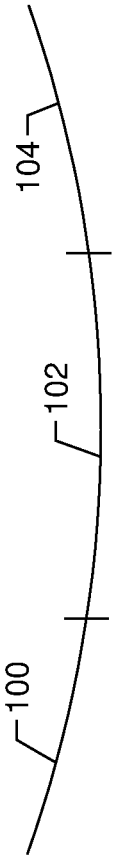

FIG. 7b

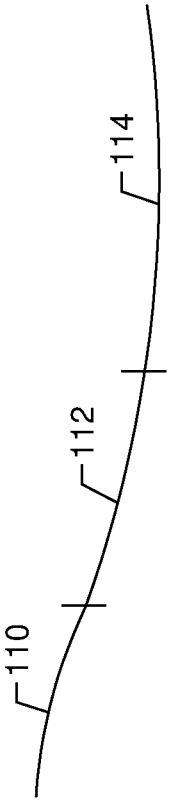

FIG. 7c

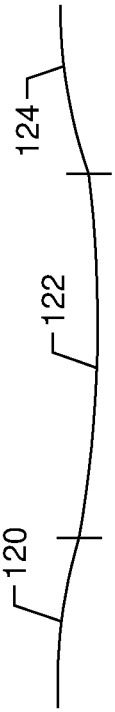

FIG. 7d

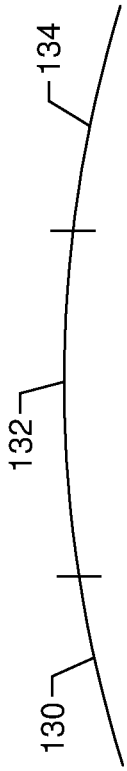

FIG. 7e

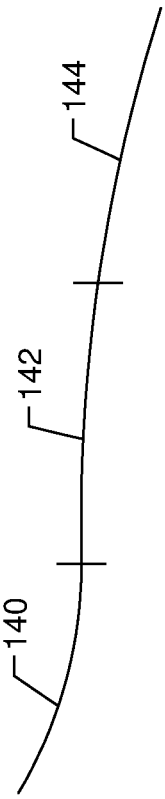

FIG. 7f

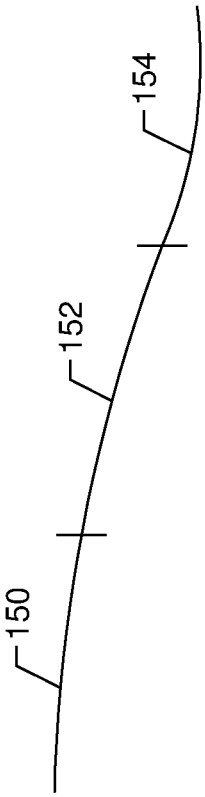

FIG. 7g

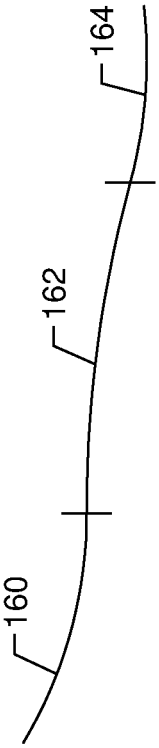

FIG. 7h

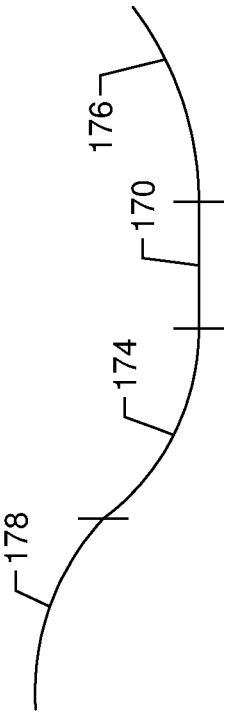

FIG. 7i

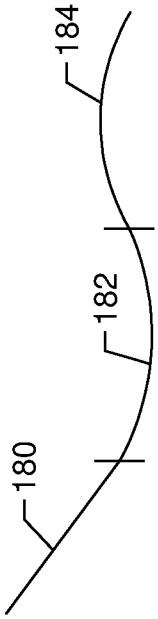

FIG. 7j

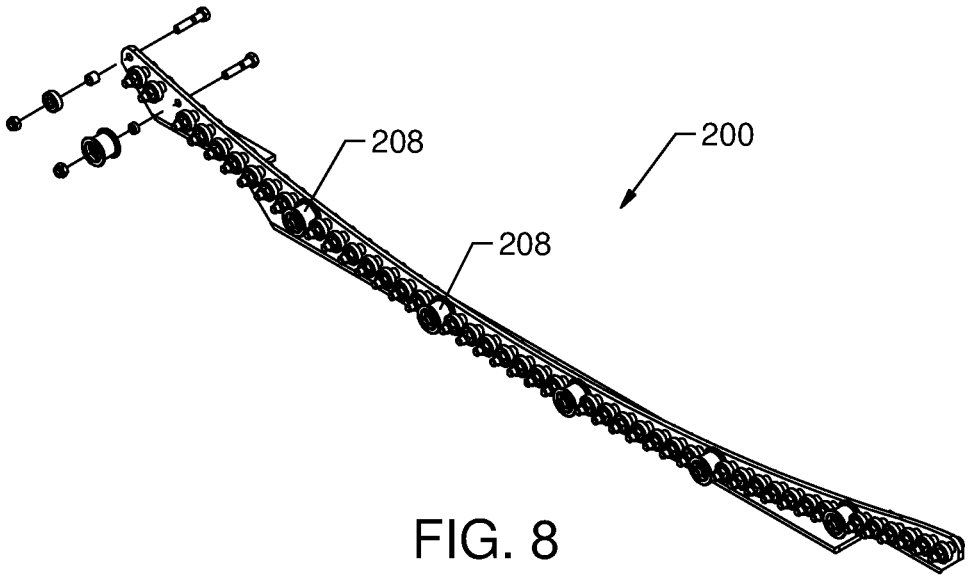

FIG. 8

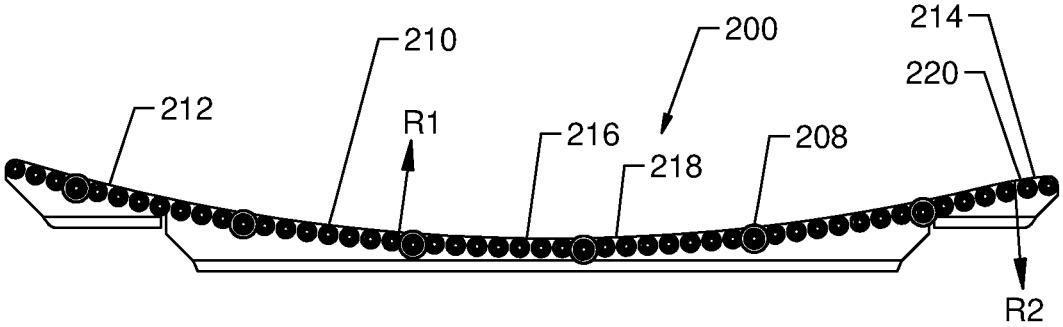

FIG. 9

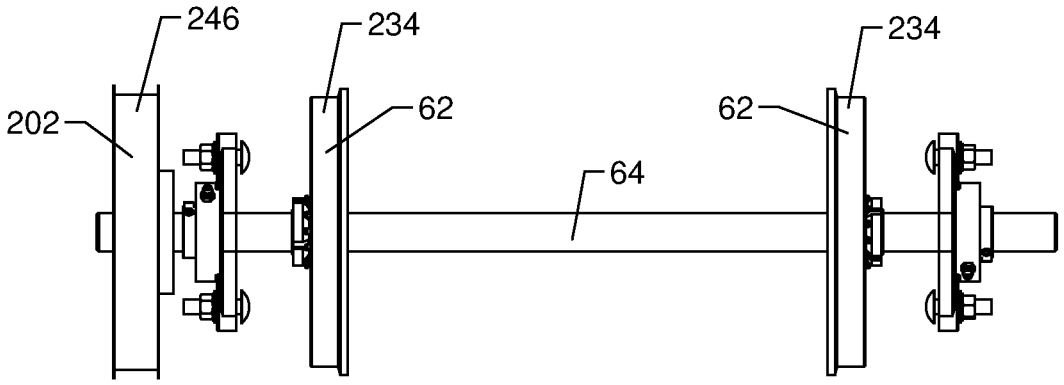

FIG. 10

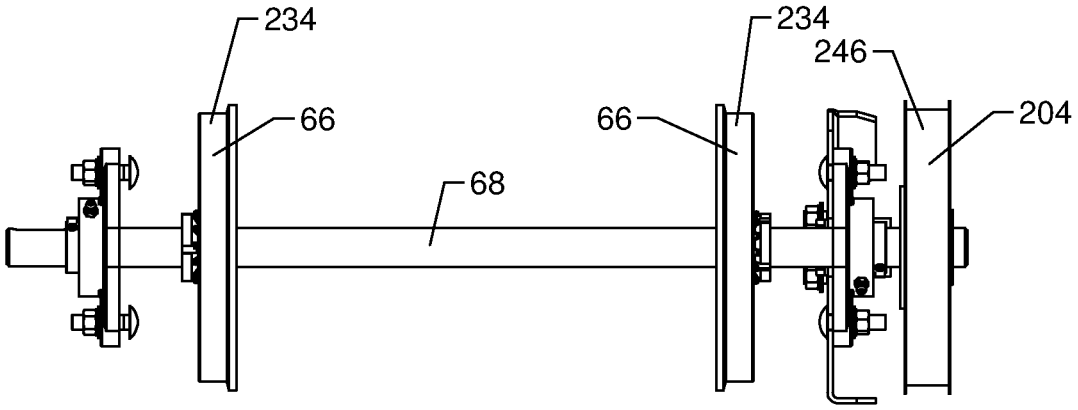

FIG. 11

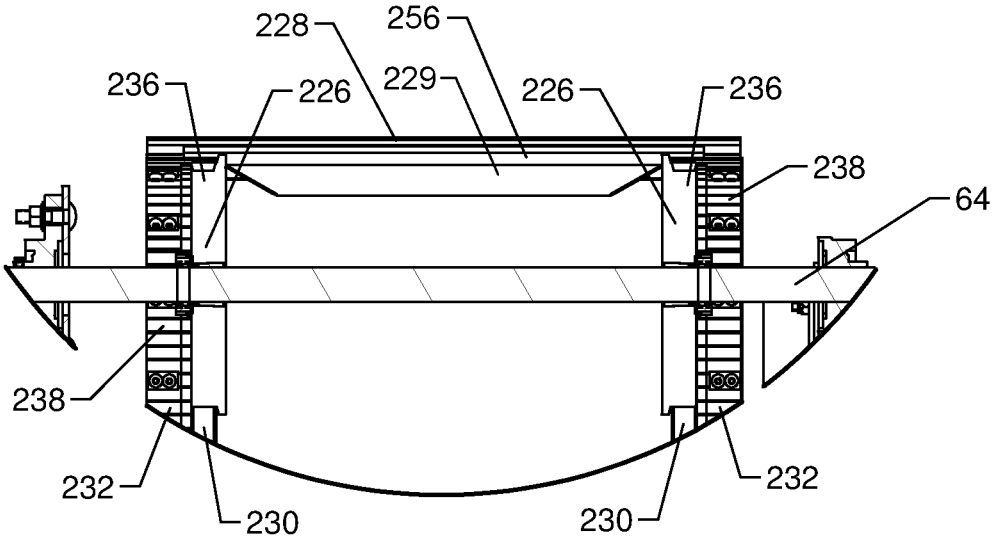
228
256
236
226
229
226
236
238
64
238
232
230
230
232

FIG. 12

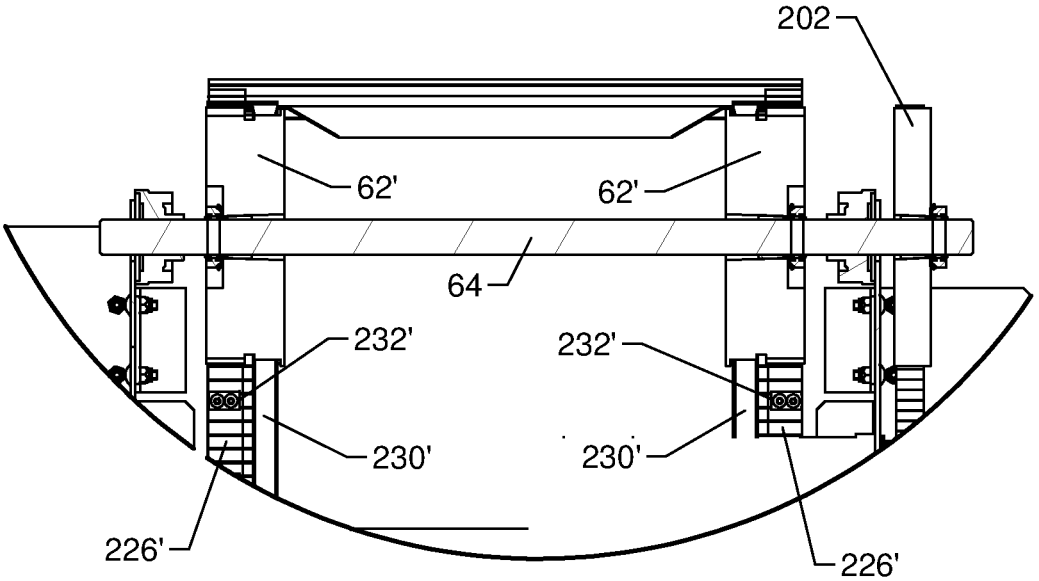
202
62'
62'
64
232'
232'
230'
230'
226'
226'

FIG. 13

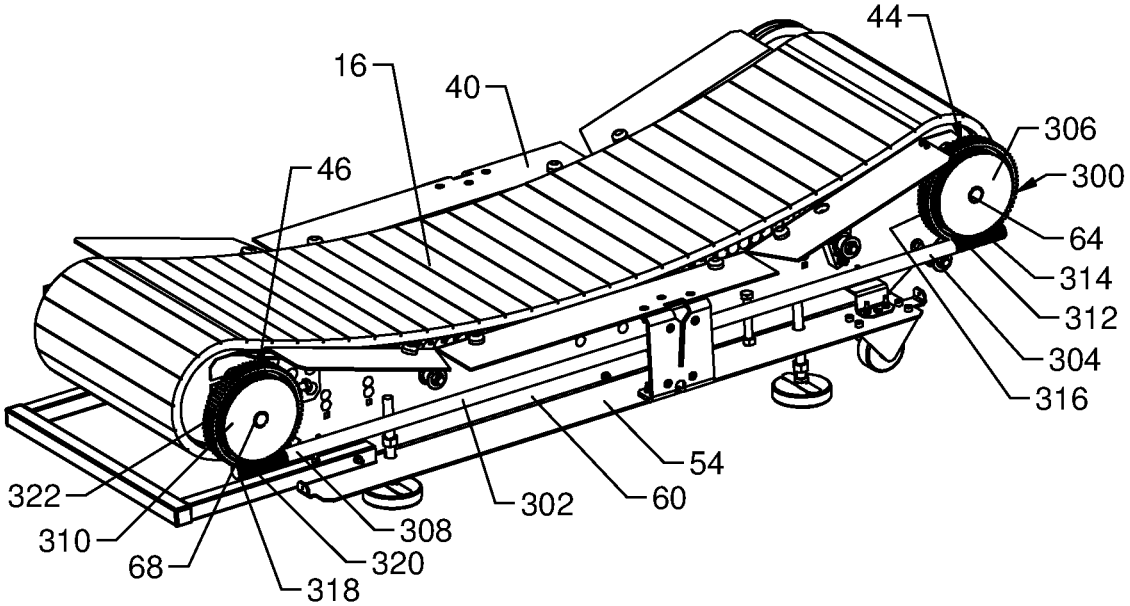
44
16
40
306
46
300
64
314
312
304
316
54
322
302
60
308
310
320
68
318

FIG. 14

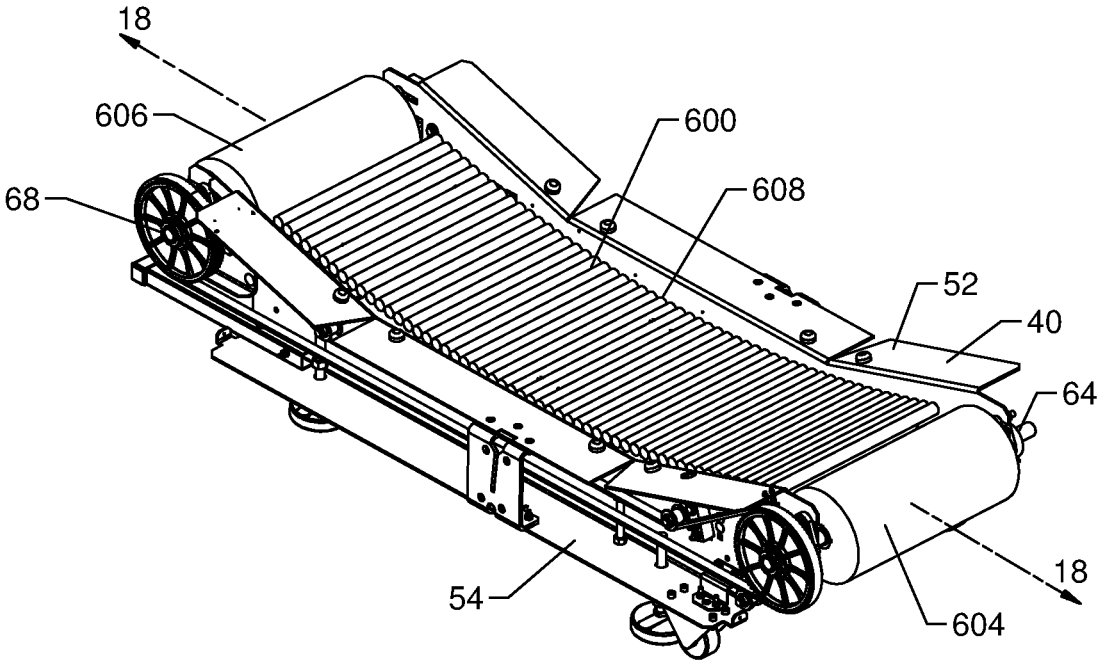
18
606
600
68
608
52
40
64
18
54
604

FIG. 17

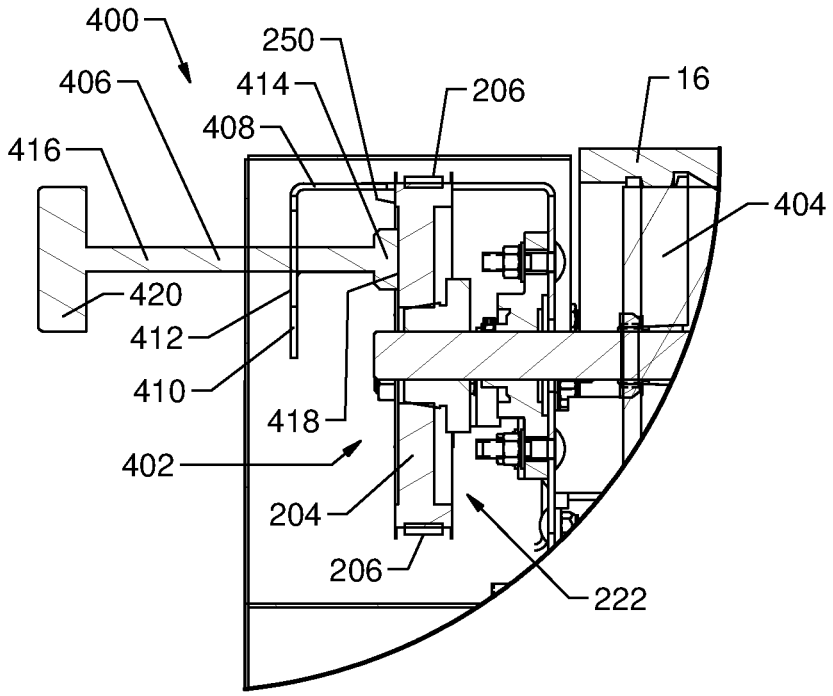
400
250
406
414
206
16
408
416
404
420
412
410
418
402
204
206
222

FIG. 15

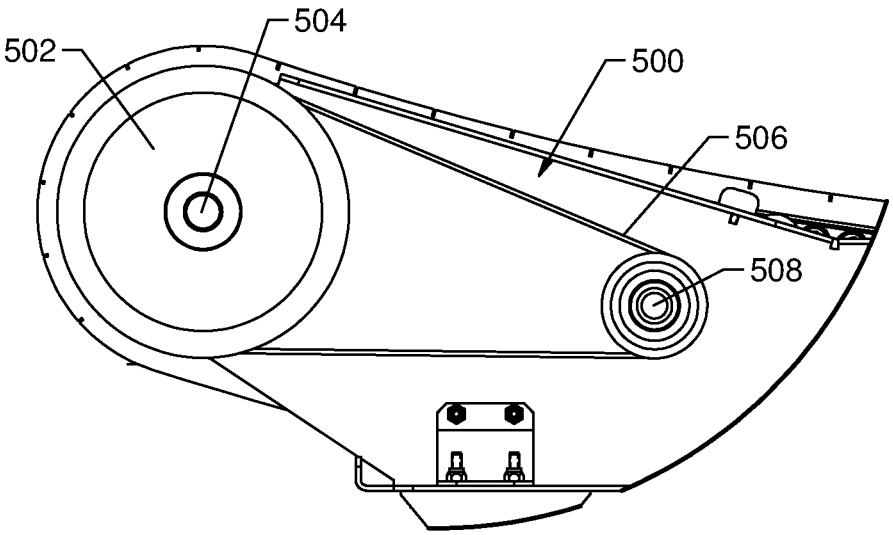
504
502
500
506
508

FIG. 16

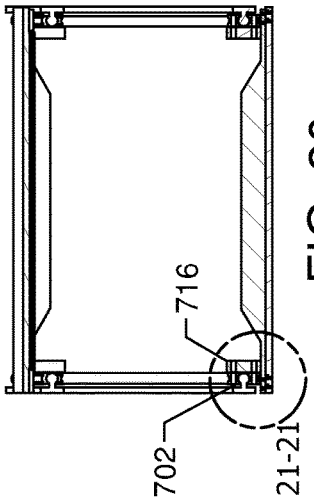

FIG. 20

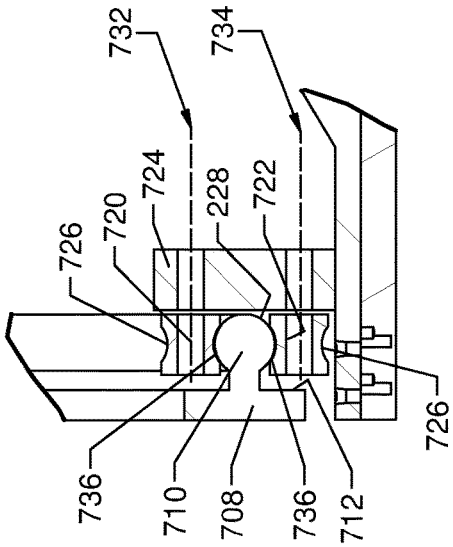

FIG. 21

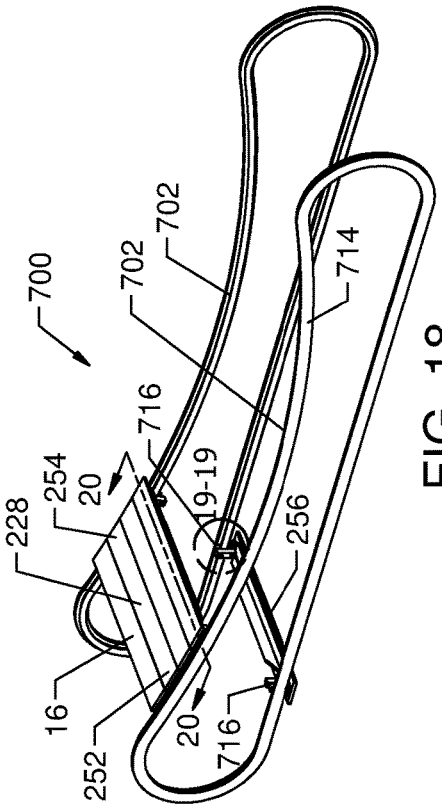

FIG. 18

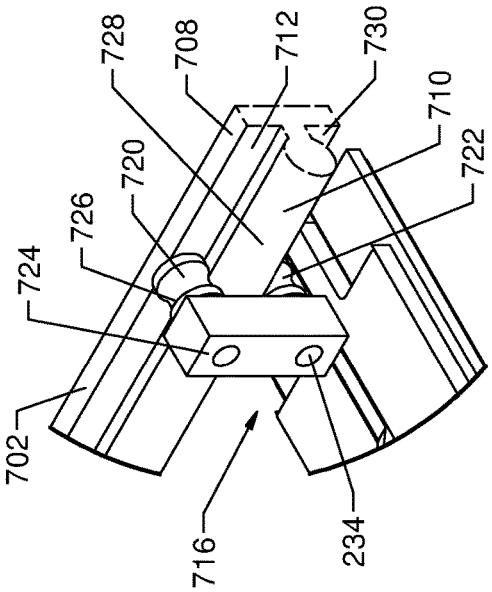

FIG. 19

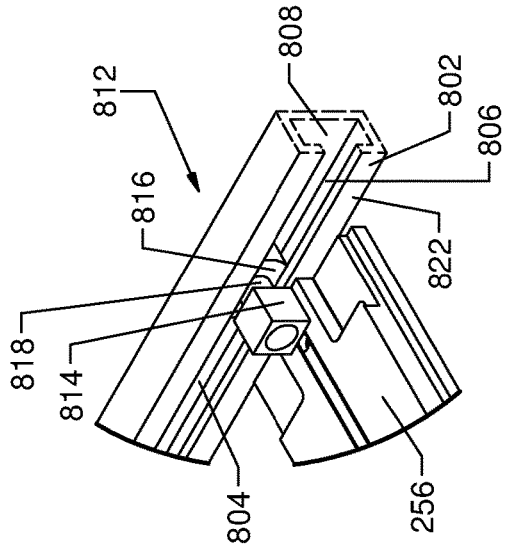

FIG. 23

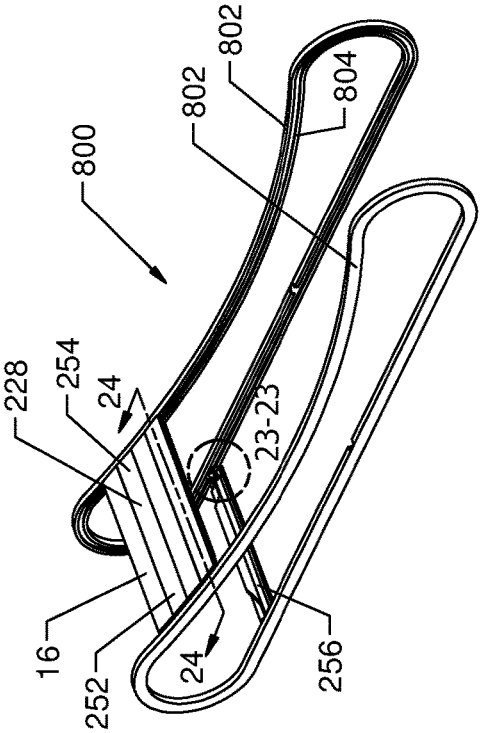

FIG. 22

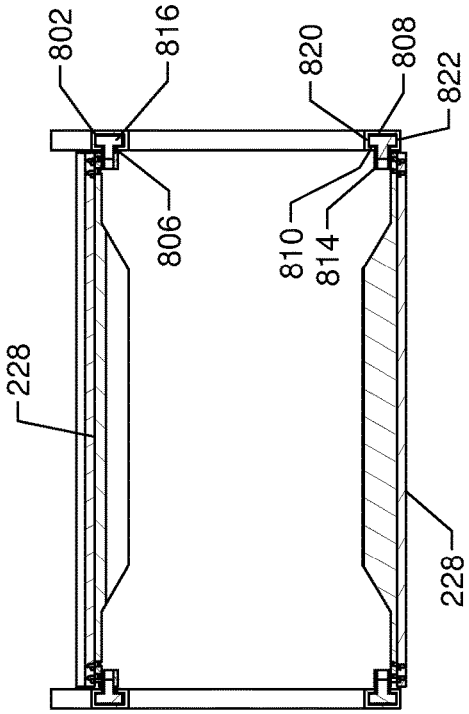

FIG. 24

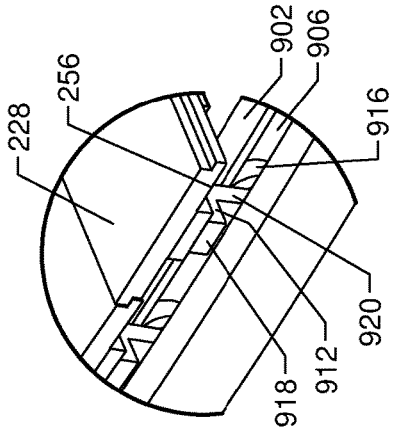

FIG. 26

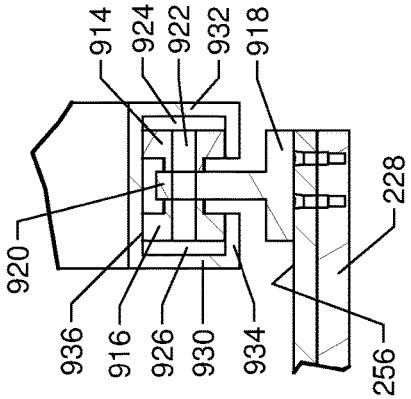

FIG. 28

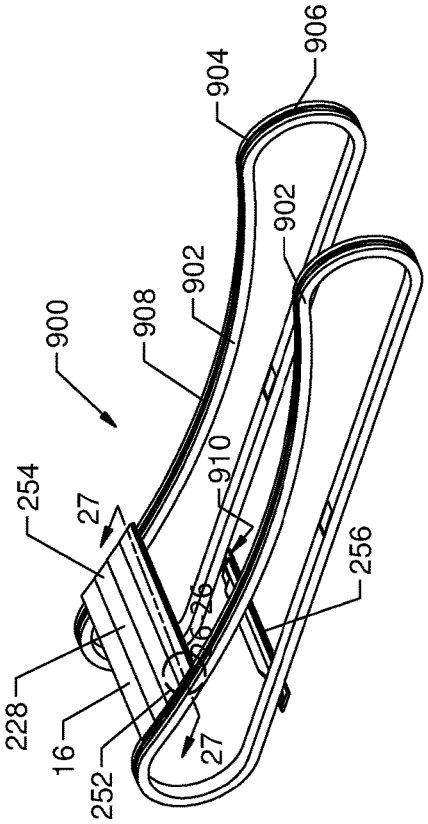

FIG. 25

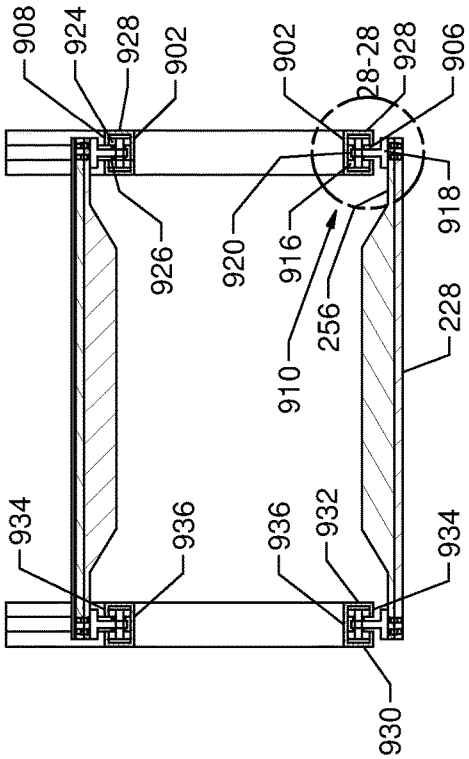

FIG. 27

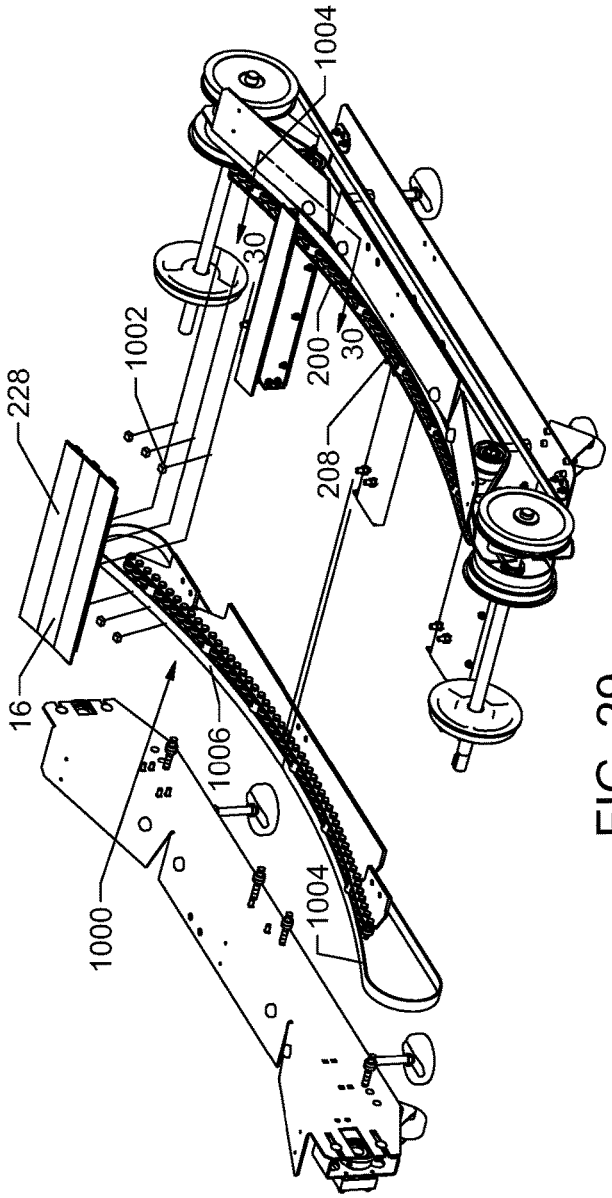
228
16
1000
1002
1006
1004
30
200
30
208
1004

FIG. 29

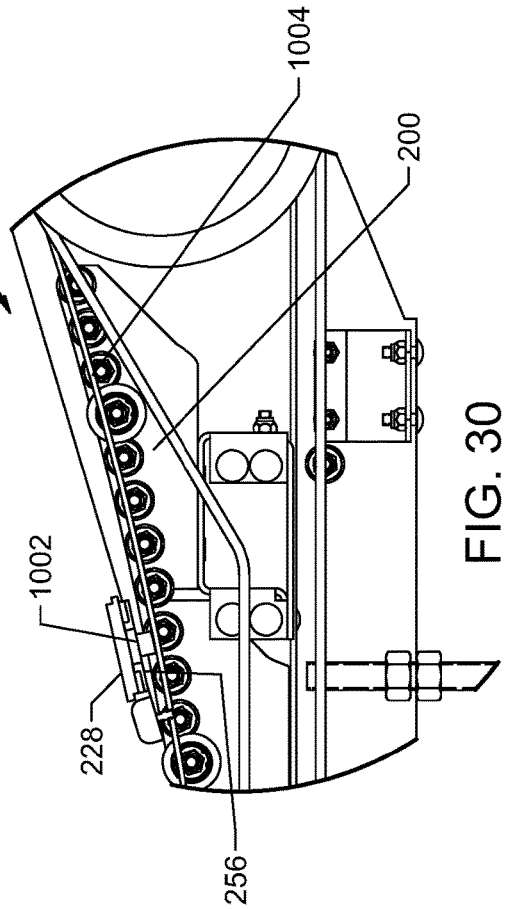
1000
1002
228
256
1004
200

FIG. 30

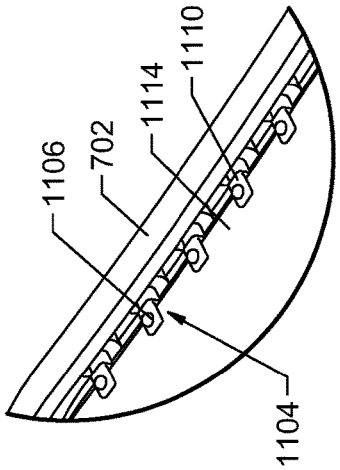

FIG. 32

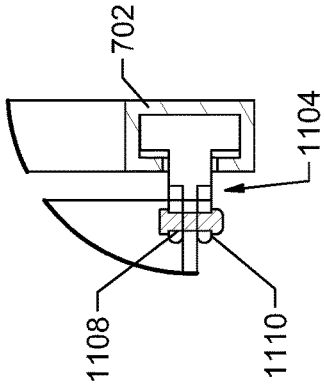

FIG. 34

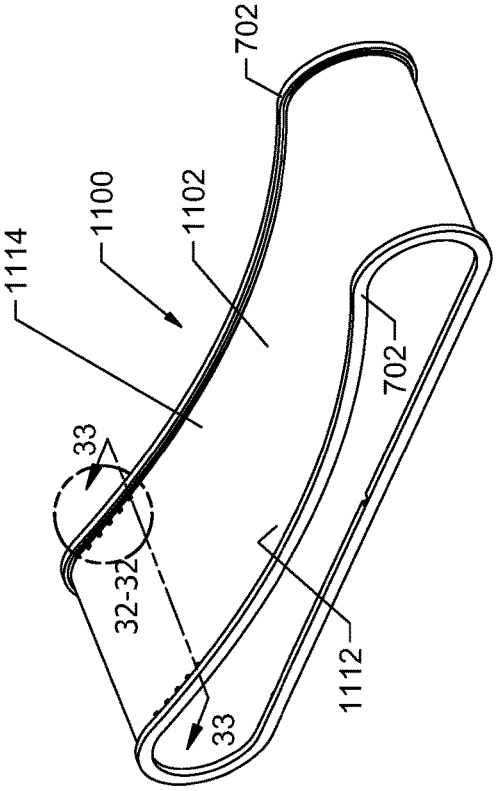

FIG. 31

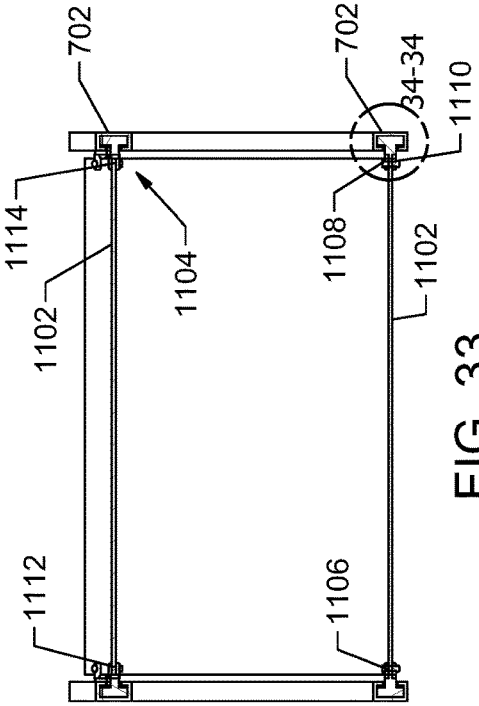

FIG. 33

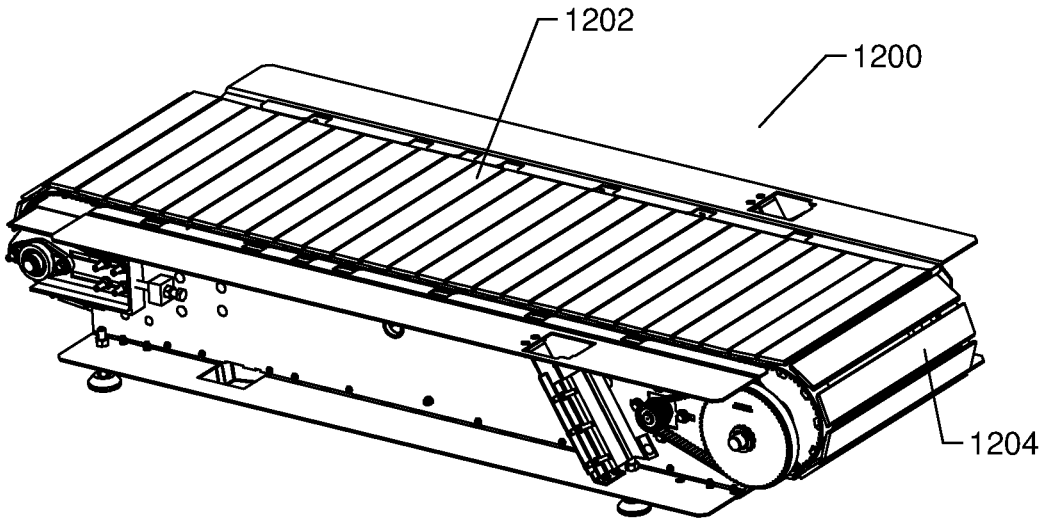

FIG. 35

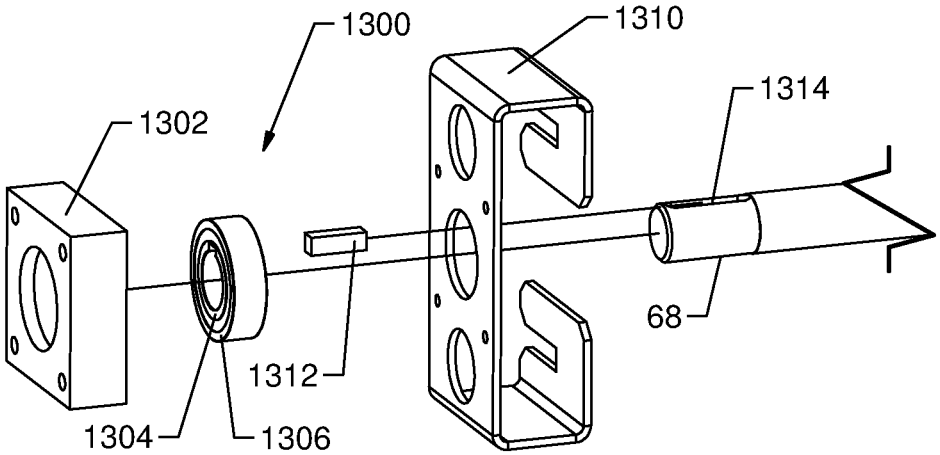

FIG. 36

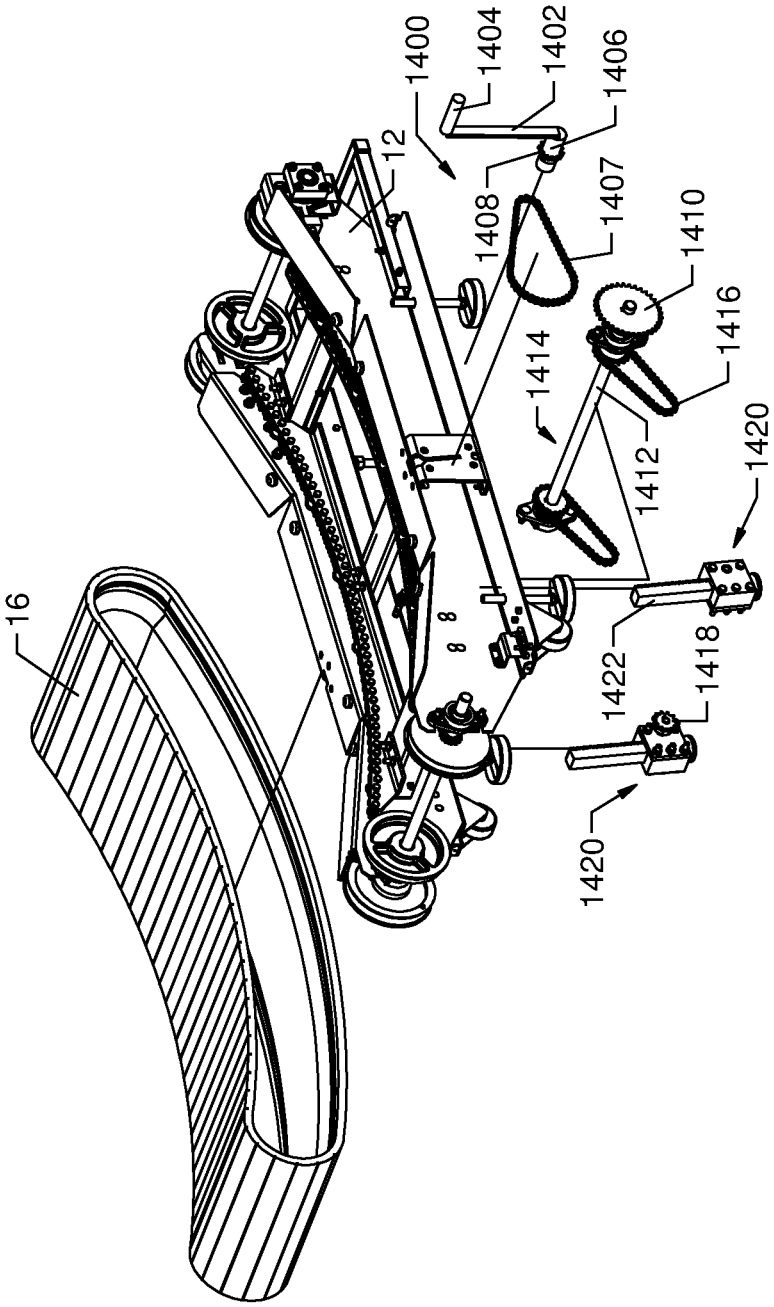
1400
1404
1402
1406
12
1408
1407
1410
1416
1414
1412
1420
16
1422
1418
1420

FIG. 37

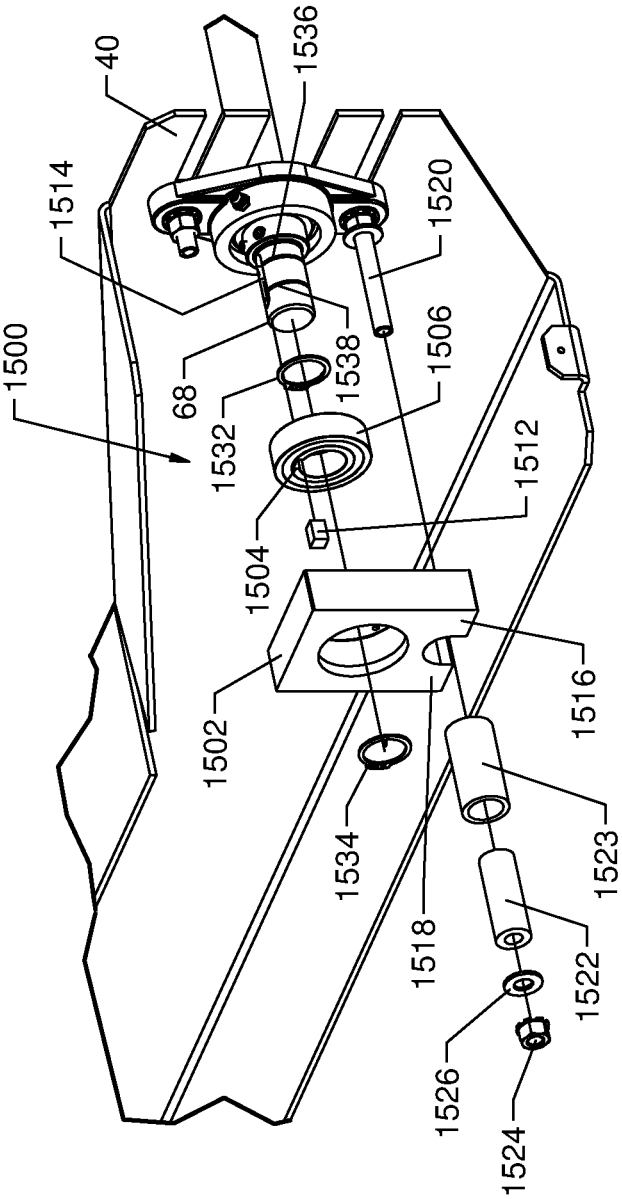
1500
1514
40
1536
1520
68
1532
1538
1506
1504
1512
1502
1534
1518
1516
1523
1522
1526
1524

FIG. 38

MANUALLY POWERED TREADMILL

CROSS-REFERENCE TO RELATED PATENT APPLICATIONS

This application is a continuation of U.S. patent application Ser. No. 16/792,444, filed Feb. 17, 2020, which is a continuation of U.S. patent application Ser. No. 15/957,721, filed Apr. 19, 2018, which is a continuation of U.S. patent application Ser. No. 14/832,708, filed Aug. 21, 2015, which is a continuation of U.S. patent application Ser. No. 14/076,912, filed Nov. 11, 2013, which is a continuation of U.S. patent application Ser. No. 13/235,065, filed Sep. 16, 2011, which is a continuation-in-part of prior international Application No. PCT/US2010/027543, filed Mar. 16, 2010, which claims priority to U.S. Provisional Application Ser. No. 61/161,027, filed Mar. 17, 2009, all of which are incorporated herein by reference in their entireties.

BACKGROUND

The present invention relates generally to the field of treadmills. More specifically, the present invention relates to manual treadmills. Treadmills enable a person to walk, jog, or run for a relatively long distance in a limited space. It should be noted that throughout this document, the term "run" and variations thereof (e.g., running, etc.) in any context is intended to include all substantially linear locomotion by a person. Examples of this linear locomotion include, but are not limited to, jogging, walking, skipping, scampering, sprinting, dashing, hopping, galloping, etc.

A person running generates force to propel themselves in a desired direction. To simplify this discussion, the desired direction will be designated as the forward direction. As the person's feet contact the ground (or other surface), their muscles contract and extend to apply a force to the ground that is directed generally rearward (i.e., has a vector direction substantially opposite the direction they desire to move). Keeping with Newton's third law of motion, the ground resists this rearwardly directed force from the person, resulting in the person moving forward relative to the ground at a speed related to the force they are creating.

To counteract the force created by the treadmill user so that the user stays in a relatively static fore and aft position on the treadmill, most treadmills utilize a belt that is driven by a motor. The motor operatively applies a rotational force to the belt, causing that portion of the belt on which the user is standing to move generally rearward. This force must be sufficient to overcome all sources of friction, such as the friction between the belt and other treadmill components in contact therewith and kinetic friction, to ultimately rotate the belt at a desired speed. The desired net effect is that, when the user is positioned on a running surface of the belt, the forwardly directed velocity achieved by the user is substantially negated or balanced by the rearwardly directed velocity of the belt. Stated differently, the belt moves at substantially the same speed as the user, but in the opposite direction. In this way, the user remains at substantially the same relative position along the treadmill while running. It should be noted that the belts of conventional, motor-driven treadmills must overcome multiple, significant sources of friction because of the presence of the motor and configurations of the treadmills themselves.

Similar to a treadmill powered by a motor, a manual treadmill must also incorporate some system or means to absorb or counteract the forward velocity generated by a user so that the user may generally maintain a substantially static position on the running surface of the treadmill. The counteracting force driving the belt of a manual treadmill is desirably sufficient to move the belt at substantially the same speed as the user so that the user stays in roughly the same static position on the running surface. Unlike motor-driven treadmills, however, this force is not generated by a motor.

SUMMARY

One embodiment of the disclosure relates to a manually operated treadmill comprising a treadmill frame having a front end and a rear end opposite the front end, a front shaft rotatably coupled to the treadmill frame at the front end, a rear shaft rotatably coupled to the treadmill frame at the rear end, and a running belt including a curved running surface upon which a user of the treadmill may run. The running belt is disposed about the front and rear shafts such that force generated by the user causes rotation of the front shaft and the rear shaft and also causes the running surface of the running belt to move from the front shaft toward the rear shaft. The treadmill is configured to control the speed of the running belt to facilitate the maintenance of the contour of the curved running surface.

Another embodiment of the disclosure relates to a manually operated treadmill comprising a treadmill frame, a front support member rotatably coupled to the treadmill frame, a rear support member rotatably coupled to the treadmill frame, a running belt including a curved running surface upon which a user of the treadmill may run, wherein the running belt is supported by the front support member and the rear support member, and a synchronizing system configured to cause the front support member and the rear support member to rotate at substantially the same speeds. The force generated by the user causes rotation of the front support member and the rear support member and also causes the running belt to rotate relative to the treadmill frame.

Another embodiment of the disclosure relates to a manually operated treadmill comprising a treadmill frame, a front shaft rotatably coupled to the treadmill frame, a rear shaft rotatably coupled to the treadmill frame, a running belt including a contoured running surface upon which a user of the treadmill may run, wherein the running belt is disposed about the front and rear shafts such that force generated by the user causes rotation of the front shaft and the rear shaft and also causes the running belt to rotate about the front shaft and the rear shaft without the rotation of the running belt being generated by a motor, and a one-way bearing assembly configured to prevent rotation of the running surface of the running belt in one direction.

Another embodiment of the disclosure relates to manually operated treadmill comprising a treadmill frame, a running belt including a running surface upon which a user of the treadmill may run, a front support member rotatably coupled to the treadmill frame, the front support member comprising the forwardmost support for the running belt, a rear support member rotatably coupled to the treadmill frame, the rear support member comprising the rearwardmost support for the running belt. The running surface comprises at least in part a complex curve located intermediate the front support member and the rear support member and incorporating a minimum of two geometric configurations.

BRIEF DESCRIPTION OF THE DRAWINGS

FIG. **1** is a perspective view of an exemplary embodiment of a manual treadmill having a non-planar running surface.

FIG. **2** is a left-hand partially exploded perspective view of a portion of the manual treadmill according to the exemplary embodiment shown in FIG. **1**.

FIG. **3** is a right-hand partially exploded perspective view of a portion of the manual treadmill according to the exemplary embodiment shown in FIG. **1**.

FIG. **4** is a perspective view of the right-hand side of the manual treadmill of FIG. **1** with a portion of the rear of the treadmill cut-away to show a portion of the arrangement of elements.

FIG. **5** is a cross-sectional view of a portion of the manual treadmill taken along line **5-5** of FIG. **1**.

FIG. **6** is an exploded view of a portion of the manual treadmill of FIG. **1** having the side panels and handrail removed.

FIG. **7***a* is a side schematic view of the profile of the running surface of the manual treadmill according to an exemplary embodiment.

FIGS. **7***b*-**7***j* are sides schematic views of alternative profiles of the running surfaces of manual treadmills according to alternative exemplary embodiments.

FIG. **8** is a partially exploded, perspective view of a bearing rail for the manual treadmill according to the exemplary embodiment shown in FIG. **1**.

FIG. **9** is a side elevation view of the bearing rail of FIG. **6**.

FIG. **10** is a top elevation view of a front shaft assembly for the manual treadmill according to the exemplary embodiment shown in FIG. **1**.

FIG. **11** is a top elevation view of a rear shaft assembly for the manual treadmill according to the exemplary embodiment shown in FIG. **1**.

FIG. **12** is a partial, cross-sectional view of the manual treadmill taken along line **12-12** of FIG. **1**.

FIG. **13** is an alternative exemplary embodiment of the partial, cross-sectional view of the manual treadmill similar to FIG. **12**.

FIG. **14** is a perspective view of an alternative embodiment of a synchronizing system integrated into a manual treadmill.

FIG. **15** is a partial, cross-sectional view of a manual treadmill including an exemplary embodiment of a braking system taken along line **15-15** of FIG. **4**.

FIG. **16** is a partial, cross-sectional view of a manual treadmill including another exemplary embodiment of a braking system taken along line **16-16** of FIG. **4**.

FIG. **17** is a perspective side view of a portion of the manual treadmill according to the exemplary embodiment shown in FIG. **1** including a plurality of rollers used in place of bearing rails.

FIG. **18** is a side perspective view of a track system for use with the exemplary embodiment of a manual treadmill shown in FIG. **1** and configured to help induce and maintain a running belt in a desired non-planar shape to define a running surface.

FIG. **19** is a detail view of the track system of FIG. **18** taken along line **19-19**.

FIG. **20** is a partial cross-sectional view of the track system of FIG. **18** taken along line **20-20**.

FIG. **21** is a detail view of the track system of FIG. **20** taken along line **21-21**.

FIG. **22** is a side perspective view of another exemplary embodiment of a track system for use with the exemplary embodiment of a manual treadmill shown in FIG. **1** and configured to help induce and maintain a running belt in a desired non-planar shape to define a running surface.

FIG. **23** is a detail view of the track system of FIG. **22** taken along line **23-23**.

FIG. **24** is a partial cross-sectional view of the track system of FIG. **18** taken along line **24-24**.

FIG. **25** is a side perspective view of another exemplary embodiment of a track system for use with the exemplary embodiment of a manual treadmill shown in FIG. **1** and configured to help induce and maintain a running belt in a desired non-planar shape to define a running surface.

FIG. **26** is a detail view of the track system of FIG. **25** taken along a line **26-26**.

FIG. **27** is a partial cross-sectional view of the track system of FIG. **25** taken along line **27-27**.

FIG. **28** is a detail view of the track system of FIG. **27** taken along line **28-28**.

FIG. **29** is a partially exploded, right-hand perspective view of a track system for use with the exemplary embodiment of a manual treadmill shown in FIG. **1** and configured to help induce and maintain a running belt in a desired non-planar shape to define a running surface.

FIG. **30** is a detail view of the track system of FIG. **29** taken along line **30-30**.

FIG. **31** is a side perspective view of another exemplary embodiment of a track system for use with the exemplary embodiment of a manual treadmill shown in FIG. **1** and configured to help induce and maintain a running belt in a desired non-planar shape to define a running surface.

FIG. **32** is a detail view of the track system of FIG. **31** taken along a line **32-32**.

FIG. **33** is a partial cross-sectional view of the track system of FIG. **31** taken along a line **33-33**.

FIG. **34** is a detail view of the track system of FIG. **32** taken along a line **34-34**.

FIG. **35** is a perspective view of an exemplary embodiment of a manual treadmill according to another embodiment having a substantially planar running surface.

FIG. **36** is a perspective view of a one-way bearing for the manual treadmill according to the exemplary embodiment shown in FIG. **1**.

FIG. **37** is a left-hand partially exploded perspective view of a portion of the manual treadmill according to the exemplary embodiment shown in FIG. **1** including an incline adjustment system.

FIG. **38** is a perspective view of a one-way bearing for the manual treadmill shown in FIG. **1**, according to another embodiment.

DETAILED DESCRIPTION

Referring to FIG. **1**, a manual treadmill **10** generally comprises a base **12** and a handrail **14** mounted to the base **12** as shown according to an exemplary embodiment. The base **12** includes a running belt **16** that extends substantially longitudinally along a longitudinal axis **18**. The longitudinal axis **18** extends generally between a front end **20** and a rear end **22** of the treadmill **10**; more specifically, the longitudinal axis **18** extends generally between the centerlines of a front shaft and a rear shaft, which will be discussed in more detail below.

A pair of side panels **24** and **26** (e.g., covers, shrouds, etc.) are preferably provided on the right and left sides of the base **12** to effectively shield the user from the components or moving parts of the treadmill **10**. The base **12** is supported by multiple support feet **28**, which will be described in greater detail below. A rearwardly extending handle **30** is provided on the rear end of the base **12** and a pair of wheels **32** are provided at the front of the base **12**, however, the

wheels **32** are mounted so that they are generally not in contact with the ground when the treadmill is in an operating position. The user can easily move and relocate the treadmill **10** by lifting the rear of the treadmill base **12** a sufficient amount so that the multiple support feet **28** are no longer in contact with the ground, instead the wheels **32** contact the ground, thereby permitting the user to easily roll the entire treadmill **10**. It should be noted that the left and right-hand sides of the treadmill and various components thereof are defined from the perspective of a forward-facing user standing on the running surface of the treadmill **10**.

Referring to FIGS. **2-6**, the base **12** is shown further including a frame **40**, a front shaft assembly **44** positioned near a front end **48** of the frame **40**, and a rear shaft assembly **46** positioned near the rear end **50** of frame **40**, generally opposite the front end **48**. Specifically, the front shaft assembly **44** is coupled to the frame **40** at the front end **48**, and the rear shaft assembly **46** is coupled to the frame **40** at the rear end **50** so that the frame supports these two shaft assemblies.

The frame **40** comprises longitudinally-extending, opposing side members, shown as a left-hand side member **52** and a right-hand side member **54**, and one or more lateral or cross-members **56** extending between and structurally connecting the side members **52** and **54** according to an exemplary embodiment. Each side member **52**, **54** includes an inner surface **58** and an outer surface **60**. The inner surface **58** of the left-hand side member **52** is opposite to and faces the inner surface **58** of the right-hand side member **54**. According to other exemplary embodiments, the frame may have substantially any configuration suitable for providing structure and support for the manual treadmill.

Similar to most motor-driven treadmills, the front shaft assembly **44** includes a pair of front running belt pulleys **62** interconnected with, and preferably directly mounted to, a shaft **64**, and the rear shaft assembly **46** includes a pair of rear running belt pulleys **66** interconnected with, and preferably directly mounted to, a shaft **68**. The front and rear running belt pulleys **62**, **66** are configured to facilitate movement of the running belt **16**. The running belt **16** is disposed about the front and rear running belt pulleys **62**, **66**, which will be discussed in more detail below. As the front and rear running belt pulleys **62**, **66** are preferably fixed relative to shafts **64** and **68**, respectively, rotation of the front and rear running belt pulleys **62**, **66** causes the shafts **64**, **68** to rotate in the same direction. The front and rear running belt pulleys **62**, **66** are formed of a material sufficiently rigid and durable to maintain shape under load. Preferably, the material is of a relatively light weight so as to reduce the inertia of the pulleys **62**, **66**. The pulleys **62**, **66** may be formed of any material having one or more of these characteristics (e.g., metal, ceramic, composite, plastic, etc.). According to the exemplary embodiment shown, the front and rear running belt pulleys **62**, **66** are formed of cast aluminum. According to another embodiment, the front and rear running belt pulleys **62**, **66** are formed of a glass-filled nylon, for example, Grivory® GV-5H Black 9915 Nylon Copolymer available from EMS-GRIVORY of Sumter, S.C. 29151, which may save cost and reduce the weight of the pulleys **62**, **66** relative to metal pulleys. To prevent a static charge due to operation of the treadmill **10** from building on a pulley **62**, **66** formed of electrically insulative materials (e.g., plastic, composite, etc.), an antistatic additive, for example Antistat 10124 from Nexus Resin Group of Mystic, Conn. 06355, maybe may be blended with the GV-5H material.

As noted above, the manual treadmill disclosed herein includes a force translation system that incorporates a variety of innovations to translate the forward force created by the user into rotation of the running belt and permit the user to maintain a substantially static fore and aft position on the running belt while running. One of the ways to translate this force is to configure the running belt **16** to be more responsive to the force generated by the user. For example, by minimizing the friction between the running belt **16** and the other relevant components of the treadmill **10**, more of the force the user applies to the running belt **16** to propel themselves forward can be utilized to rotate the running belt **16**.

Another way to counteract the user-generated force and convert or translate it into rotational motion of the running belt **16** is to integrate a non-planar running surface, such as non-planar running surface **70**. Depending on the configuration, non-planar running surfaces can provide a number of advantages. First, the shape of the non-planar running surface may be such that, when a user is on the running surface, the force of gravity acting upon the weight of the user's body helps rotate the running belt. Second, the shapes may be such that it creates a physical barrier to restrict or prevent the user from propelling themselves off the front end **20** of the treadmill **10** (e.g., acting essentially as a stop when the user positions their foot thereagainst, etc.). Third, the shapes of some of the non-planar running surfaces can be such that it facilitates the movement of the running belt **16** there along (e.g., because of the curvature, etc). Accordingly, the force the user applies to the running belt is more readily able to be translated into rotation of the running belt **16**.

As seen in FIGS. **1** and **4-5**, the running surface **70** is generally non-planar and shown shaped as a substantially complex curve according to an exemplary embodiment. The running surface can be generally divided up into three general regions each having a particular geometric configuration, the front portion **72**, which is adjacent to the front shaft assembly **44**, the rear portion **74**, which is adjacent to the rear shaft assembly **46**, and the central portion **76**, which is intermediate the front portion **72** and the rear portion **74**. In the exemplary embodiment seen in FIGS. **1** and **4**, the running surface **70** includes a substantially concave curve **80** and a substantially convex curve **82**. At the front portion **72** of the running surface **70**, the relative height or distance of the running surface **70** relative to the ground is generally increasing moving forward along the longitudinal axis **18** from the central portion **76** toward the front shaft assembly **44**. This increasing height configuration provides one structure to translate the forward running force generated by the user into rotation of the running belt **16**. To initiate the rotation of the running belt **16**, the user places her first foot at some point along the upwardly-inclined front portion **72** of the running surface **70**. As the weight of the user is transferred to this first foot, gravity exerts a downward force on the user's foot and causes the running belt **16** to move (e.g., rotate, revolve, advance, etc.) in a generally clockwise direction as seen in FIG. **1** (or counterclockwise as seen in FIG. **4**). As the running belt **16** rotates, the user's first foot will eventually reach the lowest point in the non-planar running surface **70** found in the central portion **76**, and, at that point, gravity is substantially no longer available as a counteracting source to the user's forward running force. Assuming a typical gait, at this point the user will place her second foot at some point along the upwardly-inclined front portion **72** of the running belt **16** and begin to transfer weight to this foot. Once again, as weight shifts to this second foot, gravity acts on the user's foot to continue the rotation of the

running belt **16** in the clockwise direction as seen in FIG. **1**. This process merely repeats itself each and every time the user places her weight-bearing foot on the running belt **16** at any position vertically above the lowest point of central portion **76** of the running surface **70** of the of the running belt **16**. The upwardly-inclined front portion **72** of the running belt **16** also acts substantially as a physical stop, reducing the chance the user can inadvertently step off the front end **20** of the treadmill **10**.

A user can generally utilize the force translation system of the treadmill **10** to control the speed of the treadmill **10** by the relative placement of her weight-bearing foot along the running belt **16** of the base **12**. Generally, the rotational speed of the running belt **16** increases as greater force is applied thereto in the rearward direction. The generally upward-inclined shape of the front portion **72** thus provides an opportunity to increase the force applied to the running belt **16**, and, consequently, to increase the speed of the running belt **16**. For example, by increasing her stride and/or positioning her weight-bearing foot vertically higher on the front portion **72** relative to the lowest portion of the running belt **16**, gravity will exert a greater and greater amount of force on the running belt **16** to drive it rearwardly. In the configuration of the running belt **16** seen in FIG. **1**, this corresponds to the user positioning her foot closer to the front end **20** of the treadmill **10** along the longitudinal axis **18**. This results in the user applying more force to the running belt **16** because gravity is pulling her mass downward along a greater distance when her feet are in contact with the front portion **72** of the running surface **70**. As a result, the relative rotational speed of the running belt **16** and the relative running speed the user experiences is increased. Accordingly, the force translation system is adapted to convert a variable level of force generated by the user into a variable speed of rotation of the belt.

FIG. **5** illustrates a number of possible locations where a user may position her feet. A-C indicate locations along the front portion **72** of the running surface **70** where a user may place their weight bearing foot. When the user positions her weight bearing foot at location A, she will be running with greater speed than if her weight bearing foot was positioned at locations B or C based upon the fact that the force of gravity is able to have a greater effect as the user's weight bearing foot moves from location A towards the rear of the non-planar running surface **70** as the running belt **16** rotates. At location A, gravity is able to have the greatest impact on the user so that the greatest amount of force is translated into rotation of the running belt **16**. A user can decrease her relative running speed by positioning her weight bearing foot at locations B or C. As location B is relatively higher along the front portion **72** than C, gravity is able to exert a greater force on the user and the running belt **16** than if the user's weight bearing foot was positioned at location C.

Another factor which will increase the speed the user experiences on the treadmill **10** is the relative cadence the user assumes. As the user increases her cadence and places her weight-bearing foot more frequently on the upwardly extending front portion **72**, more gravitational force is available to counteract the user-generated force, which translates into greater running speed for the user on the running belt **16**. It is important to note that speed changes in this embodiment are substantially fluid, substantially instantaneous, and do not require a user to operate electromechanical speed controls. The speed controls in this embodiment are generally the user's cadence and relative position of her weight-bearing foot on the running surface. In addition, the user's speed is not limited by speed settings as with a driven treadmill.

In the embodiment shown in FIGS. **1-6**, gravity is also utilized as a means for slowing the rotational speed of the running belt. At a rear portion **74** of the running surface **70**, the distance of the running surface **70** relative to the ground generally increases moving rearward along the longitudinal axis **18** from the lowest point in the non-planar running surface **70**. As each of the user's feet move rearward during her stride, the rear portion **74** acts substantially as a physical stop to discourage the user from moving too close to the rear end of the running surface. To this point, the user's foot has been gathering rearward momentum while moving from the front portion **72**, into the central portion **76**, and toward the rear portion **74** of the running surface **70**. Accordingly, the user's foot is exerting a significant rearwardly-directed force on the running belt **16**. Under Newton's first law of motion, the user's foot would like to continue in the generally rearward direction. The upwardly-inclined rear portion **74**, interferes with this momentum and provides a force to counter the rearwardly-directed force of the user's foot by providing a physical barrier. As the user's non-leading foot moves up the incline (see position D in FIG. **5**), the running surface **70** provides a force that counters the force of the user's foot, absorbing some of the rearwardly-directed force from the user and preventing it from being translated into increasing speed of the running belt **16**. Also, gravity acts on the user's weight bearing foot as it moves upward, exerting a downwardly-directed force on the user's foot that the user must counter to lift their foot and bring it forward to continue running. In addition to acting as a stop, the rear portion **74** provides a convenient surface for the user to push off of when propelling themselves forward, the force applied by the user to the rear portion **74** being countered by the force the rear portion **74** applies to the user's foot.

One benefit of the manual treadmill according to the innovations described herein is positive environmental impact. A manual treadmill such as that disclosed herein does not utilize electrical power to operate the treadmill or generate the rotational force on the running belt. Therefore, such a treadmill can be utilized in areas distant from an electrical power source, conserve electrical power for other uses or applications, or otherwise reduce the "carbon footprint" associated with the operation of the treadmill **10**.

A manual treadmill according to the innovations disclosed herein can incorporate one of a variety of shapes and complex contours in order to translate the user's forward force into rotation of the running belt or to provide some other beneficial feature or element. FIG. **7***a* generally depicts the curve defined by the running surface **70** of the exemplary embodiment shown in FIG. **1**, specifically, substantially a portion of a curve defined by a third-order polynomial. The front portion **72** and the central portion **76** define a concave curve and the rear portion **74** of the running surface **70** defines a convex curve. As the central portion **76** of the running surface **70** transitions to the rear portion **74**, the concave curve transitions to the convex curve. In the embodiment shown, the curvature of the front portion **72** and the central portion **76** is substantially the same; however, according to other exemplary embodiments, the curvature of the front portion **72** and the central portion **76** may differ. Please note, the description of the running surfaces as concave and convex provided herein is related to the relative curve which the user's foot would experience on the running surface **70**.

FIGS. **7***b*-**7***h* illustrate the side profiles of some exemplary non-planar, contoured running surfaces according to the innovations disclosed herein, each including a front portion, a central portion, and a rear portion. Each portion has a particular geometric configuration that is concave, convex, or linear; collectively, the portions define the non-planar running surface. For example, FIG. **7***b* shows an exemplary embodiment of the profile of a non-planar surface including a concave front portion **100**, a concave central portion **102**, and a concave rear portion **104** according to an exemplary embodiment. In this embodiment, the front portion **100**, central portion **102**, and rear portion **104** each have different curvatures. According to other exemplary embodiments, one or more of the front, central, and rear portions may have the same curvature.

FIG. **7***c* shows an exemplary embodiment of the profile of a non-planar surface including a convex front portion **110**, a concave central portion **112**, and a concave rear portion **114** according to an exemplary embodiment. Once again, this embodiment incorporates a smooth transition between the different curvatures of the front, central, and rear portions.

FIG. **7***d* shows an exemplary embodiment of the profile of a non-planar surface including a convex front portion **120**, a concave central portion **122**, and a convex rear portion **124** according to an exemplary embodiment. In this embodiment, the front portion **120** and the rear portion **122** have different curvatures, but these curvatures may be the same according to other exemplary embodiments.

FIG. **7***e* shows an exemplary embodiment of the profile of a non-planar surface including a convex front portion **130**, a convex central portion **132**, and a convex rear portion **134** according to an exemplary embodiment. In this embodiment, the front portion **130**, the central portion **132**, and the rear portion **134** each have the same convex curvature, but the curvature of one of more of the front portion **130**, the central portion **132**, and the rear portion **134** may differ according to other exemplary embodiments.

FIG. **7***f* shows an exemplary embodiment of the profile of a non-planar surface including a concave front portion **140**, a convex central portion **142**, and a convex rear portion **144** according to an exemplary embodiment. In this embodiment, the central portion **142** and the rear portion **144** having the same curvatures, but these curvatures may differ from each other according to other exemplary embodiments.

FIG. **7***g* shows an exemplary embodiment of the profile of a non-planar surface including a convex front portion **150**, a convex central portion **152**, and a concave rear portion **154** according to an exemplary embodiment. In this embodiment, the front portion **150** and the central portion **152** having the same curvatures, but these curvatures may differ from each other according to other exemplary embodiments.

FIG. **7***h* shows an exemplary embodiment of the profile of a non-planar surface including a concave front portion **160**, a convex central portion **162**, and a concave rear portion **164** according to an exemplary embodiment. In this embodiment, the front portion **160** and the rear portion **164** have different curvatures, but these curvatures may be the same according to other exemplary embodiments.

According to one exemplary embodiment, the non-planar running surface of the manual treadmill **10** is substantially curved, but that curve integrates one or more linear portions (e.g., that replace a "curved portion" or the curve or that are added/inserted into the curve). The linear portions may be substantially parallel to the longitudinal axis **18** or disposed at an angle relative thereto. FIG. **7***i* illustrates the profile of a non-planar surface wherein a substantially linear portion **170** has been integrated with a concave curve having a first concave portion **174** to one side of the linear portion **170** and a second concave portion **176** to the opposite side of the linear portion **170** according to an exemplary embodiment. In addition to the linear portion **170**, the first concave portion **174** and the second concave portion **176**, the profile further includes a fourth portion shown as a convex portion **178**. According to an another exemplary embodiment, a linear portion may replace all or a portion of the curve. Alternatively, multiple linear portions may be included in a profile of a non-planar surface.

FIG. **7***j* illustrates a linear portion **180** provided at the front of the running surface which transitions into a concave curve **182** which then transitions into a convex curve **184**.

According to an exemplary embodiment, the non-planar running surface of the manual treadmill **10** may include (or be so defined as to include) more or less than three portions. For example, FIG. **7***g* could be interpreted as defined two portions, the first portion including the front portion and the central portion, which comprise a convex curve having the same curvature throughout the front portion **150** and the central portion **152**, and the second portion including the rear portion **154** which generally comprises a concave curve. According to some exemplary embodiments, some non-planar running surfaces include at least three or more portions.

According to an exemplary embodiment, the profile defined by the non-planar running surface is substantially a portion of a curve defined by any suitable second-order polynomial, but, as clearly demonstrated in FIGS. **7***a*-*j*, the profile defined by the non-planar running surface can be a portion of a curve that is a third-order polynomial or a fourth-order polynomial. According to yet another exemplary embodiment, the running surface profile can be substantially defined by a first-order polynomial, in other words, the running surface is substantially planar. An exemplary embodiment of a manual treadmill including a planar running surface will be discussed in more detail below (see e.g., FIG. **35**).

According to an exemplary embodiment, the relative length of each portion of the running surface may vary. In the exemplary embodiment shown, the central portion is the longest. In other exemplary embodiments, the rear portion may be the longest, the front portion may be shorter than the intermediate portion, or the front portion may be longer than the rear portion, etc. It should be noted that the relative length may be evaluated based on the distance the portion extends along the longitudinal axis or as measured along the surface of the running belt itself. One of the benefits of integrating one or more of the various curves or contours into the running surface is that the contour of the running surface can be used to enhance or encourage a particular running style. For example, a curve integrated into the front portion of the running surface can encourage the runner to run on the balls of her feet rather than a having the heel strike the running belt **16** first. Similarly, the contour of the running surface can be configured to improve a user's running biomechanics and to address common running induced injuries (e.g., plantar fasciitis, shin splints, knee pain, etc.). For example, integrating a curved contour on the front portion of the running surface can help to stretch the tendons and ligaments of the foot and avoid the onset of plantar fasciitis.

One of the difficulties associated with using a running surface that has a non-planar shape is inducing the running belt **16** to assume the non-planar shape and then maintaining the running belt **16** in that non-planar shape when the treadmill is being operated. In addition to discussing this

difficultly in more detail below, a number of running belt retention systems providing ways to induce and maintain a belt in a desired non-planar shape to define the running surface are discussed below. Generally, these running belt retention systems are adapted to control the relative contour of the running belt so that the running belt substantially follows the contour of the running surface

One embodiment of a running belt retention system used to induce the running belt **16** to take-on the non-planar shape and then maintaining that shape, as shown in FIG. **5**, is discussed in reference to FIGS. **5-6** and **8-11** in which base **12** is shown further including a pair of opposed bearing rails **200** to support the running belt **16** along with a front synchronizing belt pulley **202**, a rear synchronizing belt pulley **204**, and a synchronizing belt **206** all of which are interconnected to the running belt **16**. The front rear synchronizing belt pulleys **202**, **204** may be formed of the same or different materials as the front and rear running belt pulleys **62**, **66**.

Referring to FIGS. **6** and **8-9**, in particular, the bearing rails **200** are shown including a plurality of bearings **208** and an upper or top profile **210**, shown shaped as a complex curve, according to an exemplary embodiment. The bearing rails **200** shown are supported by and preferably mounted to the frame **40** substantially between the front shaft assembly **44** and the rear shaft assembly **46**, the support members or elements about which the running belt **16** is disposed. One bearing rail **200** is coupled to one or more of the cross-members **56** proximate to the inner surface **58** of the left-hand side member **52** and the other bearing rail **200** is coupled to one of more of the cross-members **56** proximate to the inner surface **58** of the right-hand side member **54** thereby fixing the position of the bearing rails **200** relative to the frame **40**.

The bearing rails **200** are preferably configured to facilitate movement of the running belt **16**. In the exemplary embodiment seen in FIGS. **8-9**, the running belt **16** moves substantially along the top profile **210** of the bearing rails **200**. The running belt **16** contacts and is supported in part by the bearings **208** of the bearing rails and bearing **208** are configured to rotate, thereby decreasing the friction experienced by the running belt **16** as the belt moves along the top profile **210**. The bearing rails **200** are configured to help achieve the desired shape of the running surface. The shape of the top profile **210** of the bearing rails **200** at least partially corresponds to the desired shape for the running surface **70**. The at least somewhat flexible running belt **16** substantially assumes the shape of top profile **210** of the bearing rails **200** by being maintained substantially thereagainst, as will be discussed in more detail later. Accordingly, the running surface **70** has a shape that substantially corresponds to the shape of the top profile **210** of the bearing rails **200**. It should be noted that the front and/or rear running belt pulleys may also help define a portion of the shape of the running surface. Also, other suitable shape-providing components may be used in combination with the bearing rails.

FIG. **9** provides a side view of one of the bearing rails **200** to more clearly show the top profile **210** according to an exemplary embodiment. Similar to the running surface **70**, discussed above, the top profile **210** of the bearing rails **200** can be generally divided up into three general regions, the front portion **212** which is adjacent to the front shaft assembly **44** (see e.g., FIG. **5**), the rear portion **214** which is adjacent to the rear shaft assembly **46** (see e.g., FIG. **5**), and the central portion **216**, intermediate the front portion **212** and the rear portions **214**. The central portion **216** is shown as a concave curve **218** that has a radius of curvature R**1**. The front portion **212** is further shown as a continuation of the concave curve **218** of the central portion **216**, and, thus, also has a radius of curvature of R**1**. The rear portion **214** is shown as a convex curve **220** that has a radius of curvature R**2**. The front portion **212** is shown disposed substantially tangential to the central portion **216**, providing a smooth transition therebetween, and helping provide a smooth shape for the running surface **70**. The shape of the rear portion **214** also helps provide a smooth transition for the running belt **16** from the bearing rails **200** onto the rear running belt pulleys **66**, which helps ensure as much contact as possible between the running belt **16** and the rear running belt pulleys **66**. As the shape of the running surface substantially corresponds to the shape of top profile the bearing rails, the shape of the top profile of the bearing rails can necessarily be any of the shapes and/or have any of the variations (e.g., in length of portions, etc.) discussed above in FIGS. **7***a* through **7***j* with reference to possible shapes of the running surface.

According to an exemplary embodiment, each portion of the top profile is disposed substantially tangential to the portions adjacent thereto. According to other exemplary embodiments, less than all of the adjacent portions are disposed substantially tangential to the portions adjacent thereto, meaning the profile does not have an entirely smooth contour.

According to an exemplary embodiment shown in FIG. **9**, R**1** is approximately 7.26 feet. However, it is understood that a radius anywhere from 5 feet to 100-plus feet can be used. The size of the radius which can be used is typically a function of the length of the treadmill which can be accommodated. The range of possible radiuses for a convex bearing rail depends on the shaft-to-shaft distance of the treadmill (see e.g., measurement "x" in FIG. **5**, discussed in more detail below). Assuming that the radius of curvature of the curve is R_C, the radius of the front running belt pulley is R_f, and the radius of the rear running belt pulley is R_r, the range of possible radiuses is approximately: $\infty > R_C > (x - R_f - R_r)/2$. For most commercial-available treadmills, x is approximately between 14 inches and 10 feet but the treadmill can certainly be as great as 25 feet in length. According to the exemplary embodiment shown in FIG. **5**, x is approximately 57.8 inches in length. According to another exemplary embodiment, x is approximately 77.2 inches in length, with a radius R**1** of approximately 8.67 feet, wherein the greater length x and radius R**1** may facilitate use of the treadmill **10** by users with a longer running gait. The limiting factors in the length are the available space to accommodate the treadmill and the relative cost of constructing such a large treadmill.

When the treadmill **10** is being operated, the running belt **16** is driven rearwardly and the goal is to ensure that the running belt **16** follows the profile defined by a portion of the circumference of the front running pulleys **62**, the contoured profile defined by the bearings **208** supported on the bearing rails **200** and finally by a portion of the circumference of the rear running belt pulleys **66**. The particular contour which the running belt **16** assumes on the bottom of the base **12** between the rear running belt pulleys **66** and front running belt pulleys **62** is not terribly critical provided that the running belt continues to move with minimal friction and is not subject to excessive wear or obstruction.

Following the shape of the bearing rails **200** is not the natural tendency of the running belt for the particular contour seen in FIG. **5**. Rather, without more, the running belt **16** tends to be pulled upward, away from the curved bearing rails and across the central portion **76** of the treadmill **10**. Under the force of gravity, the weight of the running

belt **16** coupled with the relative spacing between the front and rear running belt pulleys **62** and **66**, respectively, would likely result in the top surface of the running belt **16** assuming a position of the shortest distance between the two pulleys, namely, a substantially straight line between the two pulleys with any excess length of the running belt **16** collecting on the bottom of the treadmill and hanging below the front and rear running belt pulleys **62** and **66**, respectively. Therefore, a system of some sort needs to be integrated into a non-planar running surface treadmill to ensure that the running belt **16** follows the desired contour over the running surface.

Further referring to FIGS. **5-6** and **8-11**, one way to ensure that the running belt **16** follows the contour of the bearing rails **200** and the front and rear running belt pulleys **62**, **66** is to utilize the weight of the running belt **16** itself in addition to adjusting the relative size of the front and rear running belt pulleys **62**, **66**; and/or providing a synchronizing system **222** according to an exemplary embodiment.

As discussed above, the running belt **16** is disposed about the front and rear running belt pulleys **62**, **66** which in turn are disposed about front and rear shafts **64**, **68**, respectively. Measured along the longitudinal axis **18** between the centerlines of the front and rear shafts **64**, **68**, the front and rear shafts **64**, **68** are spaced a distance x from each other, as shown in FIG. **5**. Accordingly, when positioning the running belt **16** about the front and rear running belt pulleys **62**, **66**, the length of the running belt **16** provided therebetween must be at least x (e.g., the straight-line distance therebetween). It follows that, when the profile of the running surface **70** is non-planar, the length of the running belt provided between the front and rear shafts **64**, **68** will be greater than x.

In the exemplary embodiment shown in FIG. **5**, when positioning the running belt **16** about the front and rear running belt pulleys **62**, **66**, a length of the running belt **16** sufficient to permit the running belt **16** to correspond to (e.g., follow, be positioned against or above, etc.) the desired contours of the bearing rails **200** and the front and rear running belt pulleys **62**, **66** is generally disposed between the front and rear shafts **64**, **68**. At each location between the front and rear shafts **64**, **68**, the force of gravity pulls downward on the running belt **16**. Generally, this force will help pull the running belt **16** downward and against the desired components of base **12**. However, gravity can also cause slippage (e.g., over the front running belt pulley **62**, over the rear running belt pulley **66**, down along curves of the bearing rail **200**, etc.) in an amount that is undesirable and the magnitude of these slippage-problems tends to increase when the treadmill **10** is being operated. Accordingly, the solution typically relies on more than the weight of the running belt alone.

Further referring to FIGS. **5-6** and **8-11**, the preferred embodiment of the running belt **16** is shown including two reinforcing belts shown as endless belts **226** and a plurality of slats **228** according to an exemplary embodiment. The endless belts **226** are configured to provide support for the running belt **16** in order to support the weight of a user. The endless belts **226** are shown disposed on opposite sides of the running belt **16**, generally interior to the outer, lateral edge of the slats **228**. The endless belts **226** are themselves reinforced, and thus help stabilize the sides of the running belt and help prevent stretching of the running belt **16**. For example, the endless belts may be reinforced with metal wiring, which is surrounded by a molded plastic coating. According to some exemplary embodiments, more or less than two endless belts may be used. According to other exemplary embodiments, other suitable support elements may be used to provide support for the running belt. Further details regarding the structure of the running belt and endless belt structure are seen in U.S. Pat. No. 5,470,293, titled "Toothed-Belt, V-Belt, and Pulley Assembly, for Treadmills," which is incorporated by reference herein.

The endless belts **226** are further configured to interact with the front running belt pulleys **62** and the rear running belt pulleys **66**. The location of each endless belt **226** laterally, along the width of the running belt **16**, substantially corresponds to the location of a longitudinally aligned front running belt pulley **62** and rear running belt pulley **66**. Each endless belt **226** includes a first or inner portion **230** and a second or outer portion **232** at an interior surface **236** according to an exemplary embodiment. The inner portion **230** is in contact with an exterior surface **234** of the corresponding running belt pulleys **62**, **66**. According to some exemplary embodiments, the outer portion **232** is also in contact with the exterior surface **234** of the corresponding running belt pulleys **62**, **66**.

FIG. **12** illustrates a running belt and running belt pulley combination wherein the exterior surfaces **234** of the front running belt pulleys **62** are substantially smooth and are in contact with the interior surface **236** of the endless belts **226**, which is also substantially smooth according to an exemplary embodiment. The outer portion **232** is shown substantially not in contact with the exterior surfaces **234** of the front running belt pulleys **62**. The outer portion **232** is further shown including a plurality of teeth **238** (e.g., being toothed); however, according to other exemplary embodiments, the outer portion may be smooth or have any suitable texture and/or configuration. In this embodiment, both of the running belt pulleys come in contact with the inner, substantially smooth portion of the endless belts, and a toothed portion of the endless belts is disposed to the outside of the running belt pulleys on both sides.

FIG. **13** illustrates an alternative running belt and running belt pulley combination according to an exemplary embodiment. In this exemplary embodiment, the front running belt pulleys **62'** include a first or inner portion **230'** and a second or outer portion **232'**. The inner portion **230'** of the front running belt pulleys **62'** is substantially smooth, while the outer portion **232'** includes a plurality of teeth, to correspond to the inner and outer portions **230'**, **232'**, of the endless belts **226'**, respectively. In this embodiment, both of the running belt pulleys include an inner, smooth portion and an outer, toothed portion. These portions correspond to an inner, smooth portion of the endless belt and an outer, toothed portion of the endless belt. This endless belt/front running belt pulley configuration is discussed in more detail in U.S. Pat. No. 5,470,293, titled "Toothed-Belt, V-Belt, and Pulley Assembly, for Treadmills," which is herein incorporated by reference in its entirety.

According to still another an exemplary embodiment, a combination of the endless belt/front running belt pulley configurations shown in FIGS. **12** and **13** is used. In this exemplary embodiment, the smooth belt and pulley configuration shown in FIG. **12** is used for the front running belt pulleys and the combination of smooth and toothed belt and pulley configuration shown in FIG. **13** is used for the rear running belt pulleys. In another exemplary embodiment, the configuration shown in FIG. **13** is used for the front running belt pulleys and the configuration shown in FIG. **12** is used for the rear running belt pulleys.

The slats **228** of the running belt **16** are configured to help support a user of the treadmill **10**. The slats **228** may be made of substantially any suitably sturdy material (e.g.,

wood, plastic, metal, etc.) and extend generally laterally between the endless belts **226**. Each slat **228** is coupled at its ends **252**, **254** to the second portions **232** of the endless belts **226** using fasteners. According to other exemplary embodiments, the slats may be otherwise coupled to the endless belts (e.g., adhered, welded, etc.) in the manner disclosed in U.S. Pat. No. 5,470,293, titled "Toothed-Belt, V-Belt, and Pulley Assembly, for Treadmills," which is incorporated herein by reference. Each slat is shown to include a portion **229** (e.g., stem, web, etc.) extending inwardly from an interior surface **256** of the slat **228**.

According to an exemplary embodiment, the running belt may be substantially any suitable, continuous loop element, including, but not limited to, a continuous urethane (e.g., polyurethane) loop, a continuous loop made of plastics other than polyurethane, a plastic belt reinforced with reinforcing elements (e.g., metal wire, a relatively harder plastic, wood, etc.), a continuous foam loop, a loop formed by a plurality of interconnected members (e.g., metallic members, wooden members, etc.) in a manner to provide at least some flexibility, etc.

Referring to FIGS. **6**, **10** and **11**, another aspect of the solution to ensuring the running belt **16** follows the desired contour involves the utilizing front running belt pulleys **62** that are slightly larger than the rear running belt pulleys **66**. That is, the radius of the front running belt pulleys, R_f, is greater than the radius of the rear running belt pulleys, R_r. Assuming the front running belt pulleys **62** are rotating with the same rotational velocity (e.g., angular speed) as the rear running belt pulleys **66**, the tangential velocity of the front running belt pulleys **62** is slightly greater than the tangential velocity of the rear running belt pulleys **66**. Thus, as the running belt **16** is driven, the portion of the running belt **16** disposed proximate the front end **20** of the treadmill **10** will be moved over the front running belt pulleys **62** and rearward with slightly greater speed than the rear running belt pulleys **66** move the portion of the running belt **16** proximate thereto. Thus, the front running belt pulleys **62** essentially "push" the running belt **16** rearward, creating a slight amount of excess running belt **16** in the area between the front running belt pulleys **62** and the rear running belt pulleys **66**, which helps to counter the force of gravity which would attempt to gather any excess length of running belt **16** on the bottom of the treadmill **10** thereby causing the top surface of the running belt **16** to assume a position of the shortest distance between the two pulleys, namely, a substantially straight line between the two pulleys. Obviously the system cannot tolerate too much excess length of running belt feeding off the front running belt pulley **62** so periodically, a portion of this excess running belt **16** will slip over the rear running belt pulley **66**. By specifically balancing the excess running belt **16** coming off the front running belt pulley **62** against the slippage allowed on the rear running belt pulley **66**, the running belt **16** will follow the desired concave, convex or linear (or combinations thereof) contours of the running surface.

If the difference between the radius of the front running belt pulleys **62** and the radius of the rear running belt pulleys **66** is too large, the running belt **16** will begin to bunch up atop the base **12** as too much excess is generated. Accordingly, there is a practical limit of differences between the radius of each of the front running belt pulleys **62** and the radius of each of the rear running belt pulleys **66**. Generally, this range may be dependent on the length of the running surface, as measured along the running belt, and/or the shape of the running surface. According to an exemplary embodiment, the size difference between the radii of the front and rear running belt pulleys, R_f-R_r, is within the range of approximately $0<R_f-R_r<0.100$ inches. Preferably, the size difference between the radii of the front and rear running belt pulleys, R_f-R_r, is within the range of approximately $0.005<R_f-R_r<0.035$ inches. In one embodiment, the radius of the front running belt pulleys is approximately 7.00"+/−0.010" and the radius of the rear running belt pulleys is approximately 6.985"+/−0.010. According to another exemplary embodiment, instead of using front and rear running belt pulleys having a radial size difference, the synchronizing belt pulleys may have a radial size difference. Similar to the differently sized front and rear running belt pulleys, the differently sized front and rear synchronizing pulleys would be used to essentially "push" the running belt rearward, creating a slight amount of excess running belt **16** in the area between the front running belt pulleys and the rear running belt pulleys.

Another means for ensuring that the running belt **16** follows the desired complex curve is to match the rotational velocity of the front running belt pulleys **62** to that of the rear running belt pulleys **66** utilizing a synchronizing system **222**. Further referring to FIGS. **5-6** and **8-11**, the synchronizing system **222** is shown generally to comprise the front synchronizing belt pulley **202**, the rear synchronizing belt pulley **204**, and the synchronizing belt **206** according to an exemplary embodiment.

The front synchronizing belt pulley **202** is rotatably mounted relative to the front shaft **64**, similar to the front running belt pulleys **62**. Preferably, the front synchronizing belt pulley **202** is securely mounted directly to the front shaft **64**. Similarly, the rear synchronizing belt pulley **204** is fixed relative to the rear shaft **68** and preferably securely mounted to the rear shaft **68**. Accordingly, the front synchronizing belt pulley **202** will move with substantially the same rotational speed as the front running belt pulleys **62**, and the rear synchronizing belt pulley **204** will move with the same rotational speed as the rear running belt pulleys **66**. When the front shaft assembly **44** and the rear shaft assembly **46** are coupled to the frame **40**, the front and rear synchronizing belt pulleys **202**, **204** are shown disposed exterior to the outer surface **60** of the left-hand side member **52**. According to another exemplary embodiment, the front and rear synchronizing belt pulleys may be placed exterior to the outer surface of the right-hand side member of the frame. According to other exemplary embodiments, the synchronizing system may be disposed substantially between the left-hand side member and the right-hand side member of the frame.

The synchronizing belt **206** is configured to provide a force that helps ensure that the front and rear shafts **64**, **68** are rotating (e.g., moving, spinning, etc.) at the same rotational velocity. The synchronizing belt **206** is shown as an endless belt that is adapted to be supported in tension about the front synchronizing belt pulley **202** and the rear synchronizing belt pulley **204**, as shown in FIGS. **4-5**. As the running belt pulleys **62**, **66** and the synchronizing belt pulleys **202**, **204** are both substantially fixed relative to the front shaft **64** and the rear shaft **68**, the rotation of the front shaft **64** and the rear shaft **68** causes the front synchronizing belt pulley **202** and the rear synchronizing belt pulley **204** to similarly rotate. In response to the motion of the front synchronizing belt pulley **202** and the rear synchronizing belt pulley **204**, the synchronizing belt **206**, which connects the front shaft assembly **44** and the rear shaft assembly **46**, similarly rotates. Because of the tension in the synchronizing belt **206** and the fact that the synchronizing belt pulleys **202**, **204** are the same size, the synchronizing belt **206** provides a counter force in response to any deviation in

rotational velocity between the front shaft assembly **44** and the rear shaft assembly **46**. For example, if the rear shaft assembly **46** was induced to start moving with greater rotational velocity than the front shaft assembly **44**, the tension in the upper portion of the synchronizing belt (i.e., that portion of the synchronizing belt that extends generally between the tops of the synchronizing pulleys) would resist any differential rotation between the front and rear synchronizing belt pulleys **202**, **204**. Continuing with the example, any discrepancy between the rotational velocity of the front and rear shafts **64**, **68** is similarly resisted by the engagement of the synchronizing belt **206**. Thus, by constraining the relative motion of the front shaft assembly **44** and the rear shaft assembly **46**, the synchronizing system **222** keeps their rotational velocity in sync, substantially preventing the front and rear running belt pulleys **62**, **66** from becoming unsynchronized and moving at different rotational velocities.

So, in practice, the running belt **16** is initially installed on the front and rear running belt pulleys **62**, **66** and the running belt **16** is manually positioned in the desired position so that a sufficient length of the running belt **16** is positioned along the top of the treadmill and the running belt **16** assumes the desired contour. While the running belt **16** is maintained in this position, the synchronizing belt **206** is mounted to the synchronizing belt pulleys **202**, **204** and once the synchronizing belt **206** is installed, it effectively resists differential rotation of the running belt pulleys **62**, **66** which could result in loss of the desired contour of the running belt **16**.

It should be noted that the tension in the synchronizing belt **206** also helps maintain the position of the synchronizing belt **206** relative to the synchronizing belt pulleys **202**, **204**. The tension helps enhance friction between an interior surface **244** of the synchronizing belt **206** and exterior surfaces **246** of the synchronizing belt pulleys **202**, **204**, making it less likely that the synchronizing belt **206** will slip relative to the synchronizing belt pulleys **202**, **204**.

One or more tensioning assemblies **248** may be provided to adjust the tension in the synchronizing belt **206** (see e.g., FIGS. **3** and **6** illustrating tensioning assemblies **248**). Tensioning assemblies **248** are configured to move portions of the synchronizing belt **206** relative to one another, stretching the synchronizing belt **206** and maintaining this stretch so that the synchronizing belt **206** can provide the necessary resistance to differential rotation of the front and rear running belt pulleys **62**, **66**. Alternatively, the tensioning assemblies **248** can be adjusted to release some of the tension in the synchronizing belt **206**. Releasing some of the tension may be desirable if the synchronizing belt **206** is too tight, causing excess friction between the synchronizing belt **206** that makes it too difficult to rotate the front and rear shaft assemblies **44**, **46** (e.g., greater than desired by the user, too great to function, etc.). The tensioning assemblies **248** are also used when the synchronizing belt **206** is being installed and removed. According to another exemplary embodiment, a single tensioning assembly is used in conjunction with one or more stationary idlers. According to still another exemplary embodiments, any devices or elements suitable for maintaining and/or adjusting the tension in the synchronizing belt may be used.

Referring to FIG. **14**, a synchronizing system **300** is shown according to another exemplary embodiment. The synchronizing system **300** would typically be used in lieu of the previously described synchronizing system **222**. In this next exemplary embodiment, the synchronizing system **300** is shown comprising a synchronizing shaft **302** mechanically connected at a first end **304** to a front gear **306** and at a second end **308** to a rear gear **310**. The front gear **306** is interconnected with, and preferably directly mounted and fixed relative to, the front shaft **64**, and the rear gear **310** is interconnected with, and preferably directly mounted and fixed relative to, the rear shaft **68**. Accordingly, the front gear **306** will move with substantially the same rotational speed as the front running belt pulleys **62**, and the rear gear **310** will move with the same rotational speed as the rear running belt pulleys **66**. When the front shaft assembly **44** and the rear shaft assembly **46** are coupled to the frame **40**, the front and rear gears **306**, **310** are shown disposed exterior to the outer surface **60** of the right-hand side member **54**. According to another exemplary embodiment, the front and rear gears **306**, **310** may be placed exterior to the outer surface of the left-hand side member of the frame. According to other exemplary embodiments, the synchronizing system may be disposed substantially between the left-hand side member and the right-hand side member of the frame.

The synchronizing shaft **302** is configured to provide a force that helps ensure that the front and rear shafts **64**, **68** are rotating (e.g., moving, spinning, etc.) at the same rotational velocity. The synchronizing shaft **302** is shown as an elongated, substantially cylindrical member that extends generally between the front shaft **64** and the rear shaft **68**. A first threaded portion **312** including a plurality of threads **314** is shown located at the first end **304** of the synchronizing shaft **302** and is configured to mesh with a plurality of teeth **316** of the front gear **306** that is fixed relative to the front shaft **64**. A second threaded portion **318** including a plurality of threads **320** is shown located at the second end **308** of the synchronizing shaft **302** and is configured to mesh with a plurality of teeth **322** of the rear gear **310** that is fixed relative to the rear shaft **68**.

The synchronizing shaft **302** rotates in response to the motion of the front gear **306** and the rear gear **310**. When the front shaft **64** and the rear shaft **68** rotate in response to the user driving the running belt **16**, the front gear **306** and the rear gear **310**, which are fixed relative to the front shaft **64** and the rear shaft **68**, respectively, similarly rotate. The front gear **306** meshes with and imparts rotational motion to the first threaded portion **312**, and, thereby, imparts rotational motion to the synchronizing shaft **302**. The rear gear **310** meshes with and imparts rotational motion to the second threaded portion **318**, and, thereby, imparts rotational motion to the synchronizing shaft **302**.

Because the synchronizing shaft **302** is rigid and the front and rear gears **306**, **310** are the same size, the synchronizing shaft **302** provides a counter force in response to any deviation in rotational velocity between the front shaft assembly **44** and the rear shaft assembly **46**. For example, if the rear shaft assembly **46** was induced to start moving with greater rotational velocity than the front shaft assembly **44**, the rear gear **310** would be prevented from moving with greater rotational velocity than the front gear **306** because of the synchronizing shaft **302**. The second threaded portion **318** is meshed with the rear gear **310**. The second threaded portion **318** is fixed relative to the first threaded portion **312**. The first threaded portion **312** is meshed with the front gear **306**, which is moving with less rotational velocity than the rear gear **310**. The front gear **306**, being fixed relative to the front shaft assembly **44** which is also traveling at the same rotational velocity, seeks to continue at this rotational velocity. Thus, the force transmitted to the front gear **306** from the rear gear **310** by the synchronizing shaft **302** is met with a counter force. Specifically, the teeth **322** of the front gear **306** counter the force applied thereto by the threads **314** of the first threaded portion **312** at the first end **304**. This counter force substantially prevents the rotational velocity of

the synchronizing shaft **302**, which includes the second threaded portion **318**, from increasing. Stated otherwise, the force applied is sufficient to prevent the second end **308** of the synchronizing shaft **302** from rotationally advancing ahead of the first end **304**. As the second threaded portion **318** is prevented from experiencing an increase in rotational velocity, the second threaded portion **318** provides a counter force to the rear gear **310**. Specifically, the threads **320** of the second threaded portion **318** counter the force applied thereto by the teeth **322** of the rear gear **310**. Thus, the synchronizing shaft **302** constrains the relative motion of the front gear **306** and rear gear **310**, and, thereby constrains the relative motion of the front shaft assembly **44** and the rear shaft assembly **46**.

Another embodiment of a running belt retention system used to induce and maintain the running belt in a desired non-planar shape to define the running surface is seen in FIG. **15**, specifically a braking system **400** configured to help induce and maintain the running belt in a desired non-planar shape to define the running surface is shown according to an exemplary embodiment. Please note, the section lines **15-15** shown in FIG. **4** do not necessarily suggest that the braking system **400** seen in FIG. **15** is integrated into the manual treadmill depicted in FIG. **4**, rather, the section line **15-15** is included in FIG. **4** to show one potential location for the integration of a braking system into a manual treadmill according to the various innovations disclosed herein. The braking system **400** is shown in cooperation with the rear shaft assembly **402** and the synchronizing system **222**. The rear shaft assembly **402** differs from the above-discussed rear shaft assembly **46** in that the rear shaft assembly **402** includes a pair of rear running belt pulleys **404** that are substantially the same size as the front running belt pulleys (not shown).

The braking system **400** has substantially the same effect as the differently sized front and rear running belt pulleys discussed above. That is, the braking system **400** causes a slight amount of excess running belt **16** in the area between the front running belt pulleys and the rear running belt pulleys. More specifically, the braking system **400** causes the rotational velocity of the rear shaft assembly **402** to be slightly lower than the rotational velocity of the front shaft assembly by applying a frictional force to the rear synchronizing belt pulley **204**. Thus, the braking system **400** acts on the synchronizing system **222** to force (e.g., urge, push, move, etc.) the rear shaft assembly **402** out of synch with the front shaft assembly.

The braking system **400** includes a generally elongated member **406** in cooperation with the synchronizing system **222**. The elongated member **406** is coupled to the rear shaft assembly **402** by a bracket **408** having a first side **410** spaced a distance apart from an outer surface **250** of the rear synchronizing belt pulley **204**. The elongated member **406** is disposed through an aperture **412** of the bracket **408** and includes a first end **414** disposed to the inside of the first side **410** and a second end **416** disposed to the outside of the first side **410**. The first end **414** includes a surface **418** configured to contact the outer surface **250** of the rear synchronizing belt pulley **204**. The second end **416** includes a knob **420** configured to be gripped by a person (e.g., a user, a trainer, etc.) and to have a rotational force imparted thereto. An exterior surface of the elongated member **406** is at least partially threaded to correspond to threading at an interior surface defining the aperture **412**. Rotating the knob **420**, and, thereby, the elongated member **406**, in one direction, causes the surface **418** to be advanced toward the outer surface **250** of the rear synchronizing belt pulley **204**, and rotating the knob **420** in the opposite direction causes the surface **418** to retreat or be moved away from the outer surface **250** of the rear synchronizing belt pulley **204**.

During operation of the treadmill, the surface **418** of the elongated member **406** is substantially in contact with the outer surface **250** of the rear synchronizing belt pulley **204**, creating friction therebetween. As the rear synchronizing belt pulley **204** of the synchronizing system **222** is fixed relative to the rear shaft assembly **402**, some of the force directed to the rear shaft assembly **402** to impart rotation thereto must be used to overcome the frictional force between the surface **418** of the elongated member **406** and the outer surface of the rear synchronizing belt pulley **204**. As the force needed to overcome the frictional force between the surface **418** of the elongated member **406** and the outer surface **250** of the rear synchronizing belt pulley **204** is no longer being directed into rotation of the rear shaft assembly **402**, the rotational velocity of the rear shaft assembly **402** is less than the rotational velocity of the front shaft assembly. Thus, the front running belt pulleys of the front shaft assembly will "push" the running belt rearward, creating a slight amount of excess running belt **16** in the area between the front running belt pulleys and the rear running belt pulleys. This excess length of running belt **16** helps to counter the force of gravity, discussed in more detail above. It should be noted that, because the friction between the surface **418** of the elongated member **406** and the outer surface **250** of the rear synchronizing belt pulley **204** is substantially constant during operation, the rotational velocity will be substantially maintained at the lower rotational velocity.

The length of excess running belt "pushed" rearward by the front running belt pulleys can be varied by adjusting the position of the surface **418** relative to the outer surface **250** of the rear synchronizing belt pulley **204**. If one moves the surface **418** laterally closer to the outer surface **250**, the friction therebetween will increase, the differential between the rotational velocity of the rear shaft assembly and the front shaft assembly will increase, and the length of the excess will increase. If one moves the surface **418** away from the outer surface **250**, the friction therebetween will decrease (or be removed if they are brought out of contact), the differential between the rotational velocity of the rear shaft assembly and the front shaft assembly will decrease, and the length of the excess will decrease.

According to another exemplary embodiment, the braking system **400** may be used with front and rear running belt pulleys that have a size differential. In such an embodiment, the braking system **400** would be used to fine tune the length of excess running belt pushed rearward with each rotation of the front and rear running belt pulleys.

FIG. **16** illustrates another exemplary embodiment of a braking system, shown as braking system **500**, configured to help induce and maintain the running belt in a desired non-planar shape to define the running surface. Please note, the section lines **16-16** shown in FIG. **4** do not necessarily suggest that the braking system **500** seen in FIG. **16** is integrated into the manual treadmill depicted in FIG. **4**, rather, the section line **16-16** is included in FIG. **4** to show one potential location for the integration of a braking system into a manual treadmill according to the various innovations disclosed herein. The braking system **500** includes a pulley **502** mounted to a rear shaft assembly **504** generally opposite a front shaft assembly, both shaft assemblies having running belt pulleys that are substantially the same size. A belt **506** rotationally couples the pulley **502** to an idler pulley **508**. The idler pulley **508** is configured to be adjustable so that it

may be moved towards or away from the pulley **502** along an axis generally parallel to the longitudinal axis **18**. Though, it should be noted that the idler pulley may be moved relative to the pulley **502** mounted to the rear shaft assembly along an axis other than one generally parallel to the longitudinal axis **18**.

By adjusting the position of the idler pulley **508** relative to the pulley **502**, one can adjust the friction between the belt **506** and the pulleys **502**, **508**. Moving the idler pulley **508** away from the pulley **502**, increases the tension in the belt **506**, and, accordingly, increases the friction between the belt **506** and the pulleys **502**, **508**. Moving the idler pulley **508** toward the pulley **502**, decreases the tension in the belt **506**, and, accordingly, decreases the friction between the belt **506** and the pulleys **502**, **508**.

Similar to the discussion of braking system **400**, increasing the friction between the belt **506** and the pulleys **502**, **508**, increases the differential between the rotation of the rear shaft assembly to which the braking system **500** is coupled and the front shaft assembly. As a corollary, decreasing the friction between the belt **506** and the pulleys **502**, **508**, decreases the differential between the rotational velocity of the rear shaft assembly **504** and the front shaft assembly. As discussed above, the greater the differential, the greater the length of the excess that the front running belt pulleys push rearward.

FIG. **17** illustrates another exemplary embodiment of a running belt retention system of the treadmill **10** used to help induce and maintain the running belt in a desired non-planar shape to define the running surface. The treadmill **10** is shown including a plurality of rollers **600** used to support the running belt **16** in place of bearing rails **200**, discussed above.

The each roller **600** is shown extending laterally generally between the left-hand side member **52** and the right-hand side member **54** of the frame **40**. Along the longitudinal axis **18**, the rollers **600** are disposed adjacent to one another generally between one or more front running belt pulleys **604** and one or more rear running belt pulleys **606**. Typically, the running belt used with this exemplary embodiment is a continuous polymer belt without slats; the use of a continuous polymer belt having greater flexibility in the lateral direction than running belt **16** improves the ease of movement of the running belt along the rollers **600**. However, other suitable continuous belts may be used according to other exemplary embodiment

In the exemplary embodiment shown, the one or more front running belt pulleys is shown as a single, front running belt pulley **604** that is substantially a large roller, disposed at the front end **48** of the frame **40**. Similarly, the one or more rear running belt pulleys is shown as a single, rear running belt pulley **606** that is a substantially a large roller, disposed at the rear portion of the frame **40**. According to other exemplary embodiments, any multiple of running pulleys may be used at one or both of the front end and the rear end, such as front running belt pulleys **62**.

Collectively, the rollers **600** define a top profile **608** similar to the top profile **210** defined by the bearing rails **200**, discussed above, and provide for a running belt to move therealong. Similar to the top profile of the bearing rails, the top profile **608** defined by the rollers may be varied (e.g., may include a convex portion and a concave portion, may be modeled by a third-order polynomial, may be modeled by a fourth-order polynomial, etc.).

The front and rear running belt pulleys **604**, **606** and the rollers **600** help define the running surface. In use, the running belt is disposed over the front running belt pulley **604**, along the top profile **602** defined by the rollers **600**, and over the rear running belt pulley **606**. The running belt is maintained in a position substantially along these elements primarily by the weight of the running belt; however, according to other exemplary embodiments, a synchronizing system may also be used to ensure that the running belt is maintained in the desired position.

Referring to FIGS. **18-21**, an embodiment of a running belt retention system including a track system **700** and configured to help induce and maintain the running belt in a desired non-planar shape to define the running surface according to an exemplary embodiment.

A treadmill according to this exemplary embodiment does not include front and rear shaft assemblies or bearing rails, but, rather, includes a pair of opposed tracks **702** configured to provide for movement of a running belt **16** therealong. The tracks **702** are spaced apart, generally define the path that the running belt **16** will travel, and substantially replicate at least a portion of the running surface. Each track **702** includes a side support wall **708** and a guide portion **710** generally centrally-disposed along the side support wall **708**. The guide portion **710** extends from an inner side **712** of the side support wall **708** towards the interior of the treadmill frame, defined generally between the left-hand side member and the right-hand side member. The guide portion **710** generally defines the contour of the running surface that is defined by the running belt **16** when coupled to the tracks **702**. An outer side **714** each side support wall **708** is disposed substantially adjacent to an inner surface of one of the side members of the treadmill frame.

A plurality of roller or wheel assemblies **716** are connected with, preferably mounted directly to or integral with, each of a plurality of slats **228** of the running belt **16**. Each a laterally-oriented slat **228** includes a left-hand end **252** generally opposite a right-hand end **254**. One of a plurality of wheel assemblies **716** is coupled at each end **252**, **254** of each slat **228** at an interior surface **256**. The wheel assemblies **716** are configured to be mated with the tracks **702** and provide for motion of the running belt **16** along the tracks **702**.

Each wheel assembly **716** is shown including first roller or wheel **720** and a second roller or wheel **722** rotatably coupled to a support shown as an elongated connecting member **724**. The connecting member **724** connects each wheel assembly **716** to a slat **228** and maintains the relative position of the first wheel **720** and the second wheel **722**. When coupled to the track **702**, the first wheel **720** of a wheel assembly **716** is disposed to one side the guide portion **710** and rotatably movable therealong, and the second wheel **722** of the wheel assembly **716** is disposed generally opposite the first wheel **720** to the other side of the central guide portion **710**.

The wheels **720**, **722** and the tracks **702** are shaped such that when they are mated, the wheels **720**, **722** cannot be pulled inwardly off of or pushed outwardly off of the track **702**. In the exemplary embodiment shown, the guide portion **710** is shown having a substantially-circular cross section **724** and the wheels **720**, **722** are shown having circumferentially-disposed arcuate depressions **726** that receive and travel along an outer curved portion **728** and an inner curved portion **730** of the guide portion **710** of the track **702**. According to other exemplary embodiments, the wheels and the track guide portion can have substantially any corresponding shapes that provide for the wheels and the track to mate and that provide for movement of the wheels therealong.

When the running belt **16** is being driven by a user, the interaction of the guide portion **710** and the first and second wheels **720**, **722** helps maintain the belt in the desired non-planar shape. As mentioned above, the tracks **702** generally defines the contour of the running surface defined by the running belt **16**. Being coupled to the guide portion **710** of the track **702**, each wheel assembly **716** rotates about the track **702**, following the contour defined thereby.

If the running belt **16** began to deviate from the desired path, the interaction between the wheels **720**, **722** and the guide portion **710** would substantially prevent undesirable shifting. While being rotatably coupled to the elongated connecting member **724**, the axes **732** and **734** of the first wheel **720** and second wheel **722**, respectively, are a fixed distance apart. Further, the arcuate depressions **726** of the wheels **720**, **722** are in contact with the outer curved portion **728** and inner curved portion **730**, respectively. Thus, as a result the interactions between the arcuate depressions **726** and the curved portions **728**, **730**, any movement of a wheel assembly **716** relative to the track **702** other than along the path defined by the track **702** is countered by a force from the guide portion **710**. It should also be noted that the interactions between the depressions **726** of adjacent wheel assemblies **716** and the curved portions **728**, **730** of the track **702** may also help keep a wheel assembly **716** in place.

Referring to FIGS. **22-24**, the treadmill **10** is shown including another exemplary embodiment of a track system configured to help induce and maintain the running belt in a desired non-planar shape to define the running surface, shown as a track system **800**. Similar to track system **700**, a treadmill according to this exemplary embodiment does not include front and rear shaft assemblies or bearing rails, but, rather, includes a pair of tracks **802** configured to provide for movement of a running belt **16** therealong. In this exemplary embodiment, each track **802** is shown as an elongated member having a substantially C-shaped cross section that defines a channel **804** having an opening **806** that faces the interior of the frame **40**. An outer wall **808** each of the tracks **802** is disposed substantially adjacent to an inner surface of a left-hand or right-hand side member **52**, **54** (shown, e.g., in FIG. **2**) such that the openings **806** face each other. The outer wall **808** is substantially opposite an inner wall **810**

As discussed above, the running belt **16** includes a plurality of laterally-oriented slats **228** each having a left-hand end **252** generally opposite a right-hand end **254**. One of a plurality of roller or wheel assemblies **812** is coupled at each end **252**, **254** of each slat **228** to mate with the tracks **802** and to provide for motion of the running belt **16** along the tracks **802**.

Each wheel assembly **812** is shown including a support shown as a mounting block **814** and a wheel **816** rotatably coupled to the mounting block **814**. The mounting block **814** mounted to an interior surface **256** of a slat **228**. The wheel **816** is supported relative to the mounting block **814** by an axis **818** that extends substantially parallel to the slats **228** to facilitate positioning the wheel **816** in the channel **804**. The wheel **816** is received in the channel **804** and is rotatably movable therewithin to facilitate travel of the running belt **16** along the contour defined by the channel **804**. The shape of the channel **804** generally corresponds to the shape of the wheel **816**.

When the running belt **16** is being driven by a user, the walls of the track **802** defining the C-shaped channel **804** help forcibly retain the wheel **816** therein, preventing the wheel from moving in any direction other than along the contour defined by the channel **804**, and, thereby, maintaining the running belt **16** in the desired non-planar shape to define the running surface. The outer wall **808** and the inner wall **810** limit the side-to-side, lateral movement of the wheel **816** when it is disposed in the channel **804**. Limiting the motion of the wheel **816**, similarly limits the motion of the wheel assembly **812** and the slat **228** fixed relative thereto. Further, a first wall **820** substantially opposite a second wall **822** substantially limits the up-and-down motion of the wheel **816** relative to the channel **804**. In circumstances where side-to-side and/or up-and-down motion of the wheel **816** occurs, the walls **808**, **810**, **820**, **822** defining the channel **804**, providing counter forces to maintain the wheel **816** in the desired position and help direct the wheel **816** along the desired path.

Referring to FIGS. **25-28**, the treadmill **10** is shown including still another exemplary embodiment of a track system configured to help induce and maintain the running belt in a desired non-planar shape to define the running surface, shown as a track system **900**. Similar to track system **800**, the treadmill according to this exemplary embodiment does not include bearing rails, but, rather, includes a pair of tracks **902** configured to provide for movement of a running belt **16** therealong. In this exemplary embodiment, each track **902** is shown as an elongated member having a substantially C-shaped cross section that defines a channel **904** having an opening **906** that faces the exterior of the track **902**. Stated otherwise, each channels **904** extend about an outer periphery **908** of a tracks **902**.

As discussed above, the running belt **16** includes a plurality of laterally-oriented slats **228** each having a left-hand end **252** generally opposite a right-hand end **254**. One of a plurality of roller or wheel assemblies **910** is coupled at each end **252**, **254** of each slat **228** to mate with the tracks **902** and to provide for motion of the running belt **16** along the tracks **902**.

Each wheel assembly **910** is shown including a support shown as a connecting bar **912** that is substantially T-shaped and connected to a first wheel **914** and a second wheel **916**. A first portion **918** of the connecting bar **912** is fixed relative to the interior surface **256** of a slat **228**. A second portion **920** extends substantially perpendicular to the first portion **918** and away from the interior surface **256** of the slat **228**. The first wheel **914** and the second wheel **916** are connected to the connecting bar **912** by an axis **922** that extends generally parallel to the first portion **918** and perpendicular to the second portion **920** of the connecting bar **912**. The first wheel **914** is disposed to one side of the second portion **920** of the connecting bar **912** and the second wheel **916** is disposed opposite the first wheel **914** to the other side of the second portion **920**.

When the wheel assemblies **910** are mated with the tracks **902**, the second portion of the connecting bar **912** extends partially into the channel **904**, the first wheel **914** is received within a first portion **924** of the channel **904** and the second wheel **916** is disposed within a second portion **926** of the channel **904**. The first portion **924** of each channel **904** is disposed proximate to an outer surface **928** of the track **902** relative to the second portion **926**.

When the running belt **16** is being driven by a user, the first wheel **914** and the second wheel **916** of a given wheel assembly rotate within the channel **904**, facilitating moment of the running belt **16** in the path defined by the track **902**. As the running belt **16** is rotated, the slats **228** are disposed generally exterior to the periphery **908** of the track **902**. The walls of the track **902** defining the channel **904** help forcibly retain the wheels **914**, **916**. An outer wall **930** and an inner wall **932** limit the side-to side movement of the wheels **914**, **916**, either by coming into contact with the wheels **914**, **916**

themselves or by coming into contact with another part of the wheel assembly **910** (e.g., the connecting bar **912**). Limiting the motion of the wheels **914**, **916** and the wheel assembly **910** similarly limits the motion of the slat fixed relative thereto, helping each slat, and, thereby, the running belt **16** to follow the desired path. Further, a first wall **934** substantially opposite a second wall **936** substantially limits the up-and-down motion of the wheels **914**, **916** relative to the channel **904**. In circumstances where side-to-side and/or up-and-down motion of the wheel **916** occurs, the walls **930**, **932**, **934**, **936** defining the channel **904**, providing counter forces to maintain the wheels **914**, **916** in the desired position and help direct the wheels **914**, **916** along the desired path.

Referring to FIGS. **29-30**, the treadmill **10** is shown including another exemplary embodiment of a track system configured to help induce and maintain the running belt in a desired non-planar shape to define the running surface, shown as a track system **1000**.

Instead of using wheel assemblies, such as **716** and **910**, discussed above, the treadmill according to this exemplary embodiment utilizes a plurality of magnets **1002** to maintain the running belt **16** in the desired position. One or more magnets **1002** are fixed relative to the interior surface **256** of the slats **228** at locations substantially corresponding to the position of a track **1004**, which is typically along the left-hand end **252** and the right-hand end **254** of the slats **228**. The magnets **1002** may be coupled by any variety of fasteners or fastening mechanisms. Generally, it is preferable that, when the magnets **1002** are fixed relative to the slats, the fasteners do not directly contact the periphery **1006** of the tracks **1004** to avoid scratching and damage thereto. While it is generally desirable to mount a magnet **1002** to each slat, **228**, the number of magnets used will vary depending upon a variety of factors such as the relative weight of the belt and the relative magnetic strength of each magnet.

The magnets **1002** are configured to magnetically couple the running belt **16** to the track **1004**, which is made of metal (e.g., steel) or includes a peripheral metal portion. The magnets **1002** have strength suitable to maintain the running belt **16** in close proximity to a periphery **1006** of the tracks **1004**.

When the treadmill is driven by a user, the force imparted to the running belt **16** is sufficient to permit the magnets to move relative bearing rails, but not to lose the magnetic connection therebetween. According to one exemplary embodiment, as the running belt **16** moves relative to the track **1004**, the magnets **1002** are generally spaced a small distance from the periphery **1006** of the track **1004**, helping to further reduce the noise associated with operation of the treadmill. According to other exemplary embodiments, the magnets **1002** are in physical contact with the periphery **1006** of the track **1004** in addition to being magnetically coupled thereto.

According to an exemplary embodiment similar to track system **1000**, a plurality of magnets may be positioned on the frame, track, or other fixed component of the treadmill base to apply a downwardly-directed force to the metal slats of the running belt as it passes over the magnets. For example, the magnets may be positioned on the cross-members **56**. As the running belt rotates, the portion passing above the magnets will be drawn downward by the force of the magnets, helping maintain that portion of the running belt (i.e., defining the running surface) in the desired shape.

Referring to FIGS. **31-34**, the treadmill **10** is shown including another exemplary embodiment of a track system configured to help induce and maintain the running belt in a desired non-planar shape to define the running surface, shown as a track system **1100**.

The track system **1100** is substantially similar to track system **700**, but configured to be operable with a running belt **1102** that is a conventional running belt rather than a slatted running belt **16**. The track system **1100** includes a pair of tracks **702** and a wheel assemblies **1104** having substantially the same configuration as wheel assembly **716** with the exception that a securing device shown as a clip **1106** is used to connect the wheel assembly **1104** to the running belt **1102**, rather than the elongated connecting member **724**. The clip **1106** is shown extending and having a first portion **1108** and a second portion **1110** that opening towards the interior of the treadmill **10** before being secured. When the running belt **1102** shown as a continuous polymer (e.g., urethane) belt is in position, a first edge **1112** of the running belt **1102** is received between a first portion **1108** and a second portion **1110** of the clip **1106** and fixed relative thereto (e.g., by a fastener, etc.). The polymer belt is a urethane belt according to an exemplary embodiment. The urethane belt is desirable heavy enough to help assume the shape of the rollers, but not so thick or heavy that it undesirably impedes movement. The clips extend along the first edge **1112** and the second edge **1114** of the running belt **1102**, substantially suspending the belt between the tracks **702**. According to an exemplary embodiment, the securing device may be any securing device suitable for securing an edge portion of the running belt **1102** relative thereto (e.g., a bolt, a clamp, etc.).

According to still another exemplary embodiment, a treadmill has a track system including a pair of tracks and wheel assemblies. The wheel assemblies include hangers (e.g., magnetic hangers) that are received in channels that are interior to the track, the hangers being slidably movable within the channels. According to one exemplary embodiment, the hangers are substantially I-shaped, having one transverse portion received in the channel and the other transverse portion fixed to an interior side of a slat. According to some exemplary embodiments, the system further includes bearing rails that facilitate motion of the running belt itself and the hangers within the track. The hangers and the channel of the track may have any configuration suitable for facilitating movement of the running belt and maintaining the running belt in the desired non-planar shape.

The above-described ways of inducing and maintaining the running belt in the desired non-planar shape can also be used with or adapted to a manual treadmill having a planar running surface, such as treadmill **1200** having planar running surface **1202** shown in FIG. **35**. The treadmill **1200** is shown substantially similar to treadmill **10**, but the running surface is substantially planar. Accordingly, the ability to manually drive the treadmill is substantially dependent on the incline of the running surface **1202** relative to the ground. Ways to adjust this incline for any treadmill disclosed herein will be discussed in more detail later.

In the exemplary embodiment shown, the running surface **1202** is defined by a running belt **1204** that is disposed about front and rear running belt pulleys of a front and rear shaft assembly, respectively. The running belt **1204** also travels along a pair of bearing rails having a substantially linear top profile that facilitate motion of the running belt **1204**.

As discussed above, the speed controls for the manual treadmill **10** and the various embodiments thereof are generally the user's cadence and relative position of her weight-bearing foot on the running surface. More generally, the running belt **16** of the treadmill **10** is responsive to the

weight of the user mounting, dismounting, or running on the treadmill **10**. While it is generally desirable for the running belt **16** to be moved rearward, the running belt is capable of rotating forward. Forward rotation of the running belt can create safety concerns. For example, if a user were to mount the treadmill by placing her weight bearing foot at a location (e.g., location D shown in FIG. **5**) along the rear portion **74** of the running surface **70**, the running belt **16** may move forward and cause them to loose their footing, resulting in an injury or simply an unpleasant user experience.

A number of safety devices may be used with the treadmill **10** to help prevent undesirable forward rotation of the running belt **16**. FIG. **36** illustrates a safety device shown as a one-way bearing assembly **1300** according to an exemplary embodiment. The one-way bearing assembly **1300** is a motion restricting element that is configured to permit rotation of at least one of the front and rear shaft assemblies **44**, **46** (and hence the running belt **16**) in only one direction, preferably clockwise as seen in FIGS. **1** and **5**.

In the exemplary embodiment shown, the one way bearing assembly **1300** is disposed about and cooperates with the rear shaft **68** as shown in FIG. **2**. The one-way bearing assembly **1300** comprises a housing **1302** which supports an inner ring **1304** that cooperates with the rear shaft **68** and supports an outer ring **1306** fixed relative to the housing **1302**. A plurality of sprags (not shown) are disposed between the inner ring **1304** and the outer ring **1306**. The sprags are asymmetric, and, thus, provide for motion in one direction and prevent rotation in the opposite direction. The housing **1302** is fixed to a bracket **1310** that is connected to, and preferably directly mounted to, the frame **40** to fix the location of the housing **1302** and prevent movement of the housing **1302** in response to the rotation of the rear shaft **68**. It should be noted that the location at which the bracket **1310** is mounted to the frame **40** can be adjusted depending on the location of the rear shaft **68**, which may change depending on the shape of the non-planar running surface or the desired tension in the running belt. According to another exemplary embodiment, the one-way bearing may be transitionally fit into the housing, rather than press fit. According to yet another exemplary embodiment, the one-way bearing may include rollers in addition to sprags.

The one-way bearing assembly **1300** further includes a key **1312** that is fixed relative to the inner ring **1304** and configured to cooperate with a keyway **1314** formed in the rear shaft **68**. Viewed from the perspective shown in FIGS. **1** and **5**, when the running belt **16** is moving rearward, rotating in the clockwise direction, the rear shaft **68** similarly rotates in the clockwise direction. The inner ring **1304** of the one-way bearing assembly **1300** rotates with rotational velocity corresponding to the rotational velocity of the rear shaft **68** because of the interaction between the key **1312** and the keyway **1314**. If a force is applied by the user to the running belt **16** that urges the rear shaft **68** to rotate counterclockwise, the one-way bearing assembly **1300** provides a counter force, preventing the counterclockwise rotation of the rear shaft **68** and the forward rotation of the running belt **16**. Specifically, as the rear shaft **68** begins to move counterclockwise, the interaction of the key **1312** and the keyway **1314** begins to drive the inner ring **1304** of the one-way bearing assembly **1300** rearward. The sprags become wedged between the inner ring **1304** and the outer ring **1306**, preventing the counterclockwise rotation of the inner ring and key **1312** disposed therein. The key **1312**, by virtue of its inability to rotate, provides a counterforce to the keyway **1314** as the keyway continues to attempt to rotate counterclockwise. By preventing the keyway **1314** from moving counterclockwise, the one-way bearing assembly **1300** thus prevents the rear shaft **68**, the rear running belt pulleys **66**, and running belt **16** from rotating counterclockwise as seen in FIGS. **1** and **5**.

FIG. **38** illustrates another safety device that may be used with the treadmill **10**, shown as a one-way bearing assembly **1500** according to an exemplary embodiment. The one-way bearing assembly **1500** is a motion restricting element that is configured to permit rotation of at least one of the front and rear shaft assemblies **44**, **46** (and hence the running belt **16**) in only one direction, preferably clockwise as seen in FIGS. **1** and **5**.

In the exemplary embodiment shown, the one-way bearing assembly **1500** is disposed about and cooperates with the rear shaft **68**. The one-way bearing assembly **1500** comprises a housing **1502** which supports an inner ring **1504** that cooperates with the rear shaft **68** and supports an outer ring **1506** fixed relative to the housing **1502**. A plurality of sprags (not shown) are disposed between the inner ring **1504** and the outer ring **1506**. The sprags are asymmetric, and, thus, provide for motion in one direction and prevent rotation in the opposite direction. The one-way bearing assembly **1500** is further shown to include a first snap ring **1532** and a second snap ring **1534**, which are configured to seat in a first circumferential groove **1536** and a second circumferential groove **1538** on the rear shaft **68**, respectively. When installed, the first snap ring **1532** is supported inboard of and adjacent to the inner ring **1504**, and the second snap ring **1534** is supported outboard of and adjacent to the inner ring **1504**, thereby further restricting axial motion of the one-way bearing assembly **1500** relative to the rear shaft **68**.

The housing **1502** is supported by a stud **1520** which is coupled to the frame **40**. The stud **1520** may be separated or spaced apart from the housing **1502** by a spacer **1522** and a sleeve **1523** which may be restrained on the stud **1520** by a nut **1524** and a washer **1526**. The sleeve **1523** of the embodiment shown is formed of rubber and is configured to reduce noise, wear, and shock load between the housing **1502** and the stud **1520** and/or the spacer **1522**. The housing **1502** includes a plurality of legs, shown as a first leg **1516** and a second leg **1518**, which extend on either side of the stud **1520**. Accordingly, the stud **1520** resists rotational motion of the housing **1502** in response to rotation of the rear shaft **68** and may provide sufficient reactive or counter force to the housing **1502** to enable the one-way bearing assembly **1500** to prevent counterclockwise rotation of the rear shaft **68**. Supporting the one-way bearing assembly **1500** in this manner negates the need for fixing the housing **1502** to the frame **40** or an intermediary bracket. Accordingly, the housing **1502** may move with the rear shaft **68** (e.g., the housing **1502** may pivot about the stud **1520**) as the rear shaft **68** flexes under load, thereby reducing side loading on the inner ring **1504**, which in turn reduces wear on, and extends the life of, the one-way bearing assembly **1500**.

It should be noted that the location at which the stud **1520** is mounted to the frame **40** can be adjusted depending on the location of the rear shaft **68**, which may change depending on the shape of the non-planar running surface or the desired tension in the running belt. Furthermore, the stud **1520** need not be positioned below or downward from the rear shaft **68**, as shown, but may be located in any direction relative to the rear shaft **68**. According to another exemplary embodiment, the one-way bearing may be transitionally fit into the housing, rather than press fit. According to yet another exemplary embodiment, the one-way bearing may include rollers in addition to sprags.

The one-way bearing assembly **1500** further includes a key **1512** that is fixed relative to the inner ring **1504** and configured to cooperate with a keyway **1514** formed in the rear shaft **68**. Viewed from the perspective shown in FIGS. **1** and **5**, when the running belt **16** is moving rearward, rotating in the clockwise direction, the rear shaft **68** similarly rotates in the clockwise direction. The inner ring **1504** of the one-way bearing assembly **1500** rotates with rotational velocity corresponding to the rotational velocity of the rear shaft **68** because of the interaction between the key **1512** and the keyway **1514**. If a force is applied by the user to the running belt **16** that urges the rear shaft **68** to rotate counterclockwise as seen in FIGS. **1** and **5**, the one-way bearing assembly **1500** provides a counter force, preventing the counterclockwise rotation of the rear shaft **68** and the forward rotation of the running belt **16**. Specifically, as the rear shaft **68** begins to move counterclockwise, the interaction of the key **1512** and the keyway **1514** begins to drive the inner ring **1504** of the one-way bearing assembly **1500** rearward. The sprags become wedged between the inner ring **1504** and the outer ring **1506**, preventing the counterclockwise rotation of the inner ring and key **1512** disposed therein. The key **1512**, by virtue of its inability to rotate, provides a counterforce to the keyway **1514** as the keyway continues to attempt to rotate counterclockwise. By preventing the keyway **1514** from moving counterclockwise, the one-way bearing assembly **1500** thus prevents the rear shaft **68**, the rear running belt pulleys **66**, and running belt **16** from rotating counterclockwise as seen in FIGS. **1** and **5**.

Other safety devices to help prevent undesirable forward rotation of the running belt **16** may include cam locking systems, which may be particularly well-suited for use in conjunction with track systems **700**, **800**, and **900**. Also, taper locks, a user operated pin system, or a band brake system with a lever may be utilized.

Controlling the operation of the running belt **16** in ways in addition to preventing rearward rotation, can help improve the safety of the treadmill and/or help a user adjust the treadmill for a desirable level of performance. Including an incline or elevation adjustment system is one way to provide these benefits. As mentioned above, as the increasing or decreasing of the relative height or distance of the running surface relative to the ground is one way that the operation, most typically the speed, of the treadmill can be adjusted. Accordingly, adjusting the incline of the base of the treadmill results in an adjustment to the speeds a user can achieve and/or how easy or challenging it is for the user to achieve certain speeds.

Referring back to FIGS. **1-6**, a plurality of nuts **270** are fixed, and more preferably welded, to the bottom of the frame **40** allow the feet **28** to be adjusted. The feet **38** include a lower or base portion **272** and a threaded shaft **274** extending vertically upward from the base portion **272** according to an exemplary embodiment. Generally, by increasing the distance between the nuts **270** and the base portions **272** of the feet **28** at the front end **48** of the frame **40** relative to the rear end **50**, the incline of the base **12** will increase. Stated otherwise, the angle between the longitudinal axis **18** and the ground will increase. Similarly, the distance between the nuts **270** and the base portions **272** of the feet at the rear end **50** may be decreased relative to the feet **28** at the front end **48**, thereby increasing the incline. By increasing the incline, a user is typically able to achieve greater speeds on the treadmill **10**.

Treadmill **1200** shown in FIG. **35** preferably has at least some incline (i.e., the longitudinal axis of the treadmill to be other than parallel to the ground) when in operation as the shape of the running surface, substantially planar, does not provide for increases and decreases in height in and of itself. On the other hand, the longitudinal axes of the treadmills having non-planar running surfaces may be parallel to the ground or at an incline thereto during operation. It should be noted that, while it is generally desirable to have the front shaft at a height at or above the height of the rear shaft, with some running surface configurations, desirable orientations can be achieved by raising the rear shaft to a location above the front shaft relative to the ground.

In some cases, the user may want to decrease the incline of the treadmill (e.g., to decrease the speeds the treadmill can achieve, etc.). For example, the user may want to utilize a relatively long stride, but does not want to be running at such high speeds. This can be accomplished by lowering the incline of the treadmill from the higher incline position. Once in the lowered position, the same stride the user was using at the higher incline position will typically result in the user running at lower speeds in the lower incline position. This same principle can also be applied for the purposes of safety. That is, keeping the front of the treadmill at a lower incline position or lowering the treadmill to a lower incline position can help prevent a user from achieving speeds that are too great for them (e.g., that would cause them to be off-balance, lose control, be injured, etc.).

Because the treadmill is preferably manually operated, it does not have an external power source which can be utilized to operate a height adjusting motor as is found in conventional treadmills. Therefore, a manual height adjusting system is preferably integrated into the treadmill. Referring to FIG. **37**, an example of a manual incline or elevation adjustment system **1400** is shown according to an exemplary embodiment. A hand crank **1402** configured to be operated by a person, such as the user, is provided allow a user to operate the incline adjustment system **1400** to adjust the incline of the base **12** of the treadmill **10** relative to the ground. The front shaft **64** may be lowered relative to the rear shaft **68** and/or the front shaft **64** may be raised relative to the rear shaft **68** using the hand crank **1402**. In an alternative exemplary embodiment, the front shaft may be maintained at a position above the ground, and the rear shaft may be raised or lowered relative thereto adjust the incline.

Generally, the hand crank **1402** includes a handle portion **1404** disposed parallel to and spaced a distance from a shaft **1406** that is coupled to the frame **40** (e.g., with a bracket). When assembled, a drive belt or chain **1407** is disposed about a gear **1408** that is positioned about the shaft **1406** of the hand crank **1402**. Rotational motion can be imparted to the gear **1408** by rotating the handle portion **1404**. In response to rotation of the gear **1408**, the drive belt **1407** causes a sprocket **1410** is fixed relative to an internal connecting shaft **1412** of the internal connecting shaft assembly **1414** to rotate. The internal connecting shaft assembly **1414** further includes a pair of drive belts or chains **1416** that are operably coupled to gears **1418** of rack and pinion blocks **1420**. The rotation of the internal connecting shaft **1412** causes the drive belts or chains **1416** to rotate gears **1418**. As the gears **1418** rotate, a pinion (not shown) disposed within the rack and pinion blocks **1420** imparts linear motion to the racks **1422**, thereby operably raising or lowering the base **12** of the treadmill **10** depending on the direction of rotation of the handle portion **1404** of the hand crank **1402**.

According to another exemplary embodiment, an incline adjustment system that is a gas assisted un-weighting incline adjustment system may be utilized. According to other

exemplary embodiments, any suitable linear actuator may serve as an incline adjustment system for the manual treadmill disclosed herein.

According to an exemplary embodiments, the incline of one or more portions of the running surface may be adjusted independent of adjusting the incline of the base. For example, one or more portions of a bearing rail may be configured to be movable relative to one or more other portion of the bearing rail. In one exemplary embodiment, a bearing rail is divided into a first portion and a second portion movable relative to each of the about a pivot point disposed therebetween. A person (e.g., a user, trainer, technician, etc.) can adjust the operational characteristics of the treadmill (similar to the discussion of using running surfaces having different curved profiles above) by merely adjusting the relative position of the bearing rail portions. If the user wants to achieve greater speeds, they may increase the incline of the front portion, while leaving the center and rear portions unchanged. If the user would like to alter the configuration of the treadmill to more strongly encourage running on the balls of their feet, they might increase the incline of the front and rear portions from a higher radius of curvature so that they collectively define a lower radius of curvature. Adjustments to the position of the bearing rails may be imparted using a crank, or other suitable device.

It is further contemplated that, because the treadmill **10** does not require an electric motor for operation, it is well suited for operation in an aquatic environment. For example, the treadmill **10** may be at least partially submerged in a pool, thereby providing added resistance due to hydrodynamic drag on a user and/or reducing footfall impact due to the buoyancy of the user. Accordingly, a submerged embodiment of the treadmill **10** may be used for training and/or rehabilitation purposes. Modifications may be made to the treadmill **10** for use in an aquatic environment. For example, the treadmill **10** may include sealed bearings and components formed of corrosion-resistant materials (e.g., plastic, composite, stainless steel, brass, etc.) to extend its useful life. Further, the shape of the running surface **70** may also be modified to compensate for the buoyancy of the user in water and to compensate for the effects of salinity on buoyancy. For example, it is contemplated that the shape of the running surface **70** may be different for a treadmill **10** used in a freshwater environment and a highly saline environment.

A number of other devices, both mechanical and electrical, may be used in conjunction with or cooperate with a treadmill according to this disclosure. FIG. **1**, for example, shows a display **280** adapted to calculate and display performance data relating to operation of the treadmill according to an exemplary embodiment. The display **280** includes an independent power source (e.g., a battery) that provides for the display **280** to be electrically-operative. The feedback and data performance analysis from the display may include, but are not limited to, speed, time, distance, calories burned, heart rate, etc. For example, a the display may include a sensor that is responsive to the position of a magnet on one of the running belt pulleys. The sensor is configured to recognize every time the magnet rotates past (e.g., moves past, crosses, etc.) a certain location. With this data, the display may calculate the speed at which the user is running and then provide this data to them via a user interface. According to other exemplary embodiments, other displays, cup holders, cargo nets, heart rate grips, arm exercisers, TV mounting devices, user worktops, and/or other devices may be incorporated into the treadmill.

As utilized herein, the terms "approximately," "about," "substantially," and similar terms are intended to have a broad meaning in harmony with the common and accepted usage by those of ordinary skill in the art to which the subject matter of this disclosure pertains. It should be understood by those of skill in the art who review this disclosure that these terms are intended to allow a description of certain features described and claimed without restricting the scope of these features to the precise numerical ranges provided. Accordingly, these terms should be interpreted as indicating that insubstantial or inconsequential modifications or alterations of the subject matter described and are considered to be within the scope of the disclosure.

It should be noted that the term "exemplary" as used herein to describe various embodiments is intended to indicate that such embodiments are possible examples, representations, and/or illustrations of possible embodiments (and such term is not intended to connote that such embodiments are necessarily extraordinary or superlative examples).

For the purpose of this disclosure, the term "coupled" means the joining of two members directly or indirectly to one another. Such joining may be stationary or moveable in nature. Such joining may be achieved with the two members or the two members and any additional intermediate members being integrally formed as a single unitary body with one another or with the two members or the two members and any additional intermediate members being attached to one another. Such joining may be permanent in nature or may be removable or releasable in nature.

It should be noted that the orientation of various elements may differ according to other exemplary embodiments, and that such variations are intended to be encompassed by the present disclosure.

It is important to note that the constructions and arrangements of the manual treadmill as shown in the various exemplary embodiments are illustrative only. Although only a few embodiments have been described in detail in this disclosure, those skilled in the art who review this disclosure will readily appreciate that many modifications are possible (e.g., variations in sizes, dimensions, structures, shapes and proportions of the various elements, values of parameters, mounting arrangements, use of materials, colors, orientations, etc.) without materially departing from the novel teachings and advantages of the subject matter recited in the claims. For example, elements shown as integrally formed may be constructed of multiple parts or elements, the position of elements may be reversed or otherwise varied, and the nature or number of discrete elements or positions may be altered or varied. The order or sequence of any process or method steps may be varied or re-sequenced according to alternative embodiments. Other substitutions, modifications, changes and omissions may also be made in the design, operating conditions and arrangement of the various exemplary embodiments without departing from the scope of the present disclosure.

What is claimed:

1. A manually powered treadmill, comprising:

a frame;

at least one front running belt pulley coupled to the frame;

at least one rear running belt pulley coupled to the frame and spaced a distance from the at least one front running belt pulley;

a running belt at least partially supported by at least one of the at least one front running belt pulley and the at

least one rear running belt pulley, wherein the running belt includes a running surface, at least a portion of which is curved;

a safety device coupled to the frame and the running belt, the safety device having a first element and a second element, the first element substantially surrounding the second element or the second element substantially surrounding the first element;

wherein one of the first and second elements of the safety device and the running belt freely rotate in a first direction of rotation relative to the frame, however, in a second direction of rotation, opposite the first direction of rotation, the one of the first and second elements is substantially prevented from rotation relative to the frame to substantially prevent or resist rotation of the running belt relative to the frame.

2. The manually powered treadmill of claim **1**, further comprising a front shaft coupled to frame, the front shaft being adapted to support the at least one front running belt pulley.

3. The manually powered treadmill of claim **1**, further comprising a rear shaft coupled to frame, the rear shaft being adapted to support the at least one rear running belt pulley.

4. The manually powered treadmill of claim **1**, wherein the first and second elements of the safety device at least partly form a one-way bearing.

5. The manually powered treadmill of claim **1**, further comprising a braking system coupled to the frame and configured to selectively resist rotational movement of the running belt in the first direction.

6. The manually powered treadmill of claim **1**, further comprising a plurality of bearings coupled to the frame, at least one bearing of the plurality of bearings configured to at least partially support the running belt.

7. The manually powered treadmill of claim **1**, further comprising a rearwardly extending handle coupled to the frame.

8. The manually powered treadmill of claim **1**, wherein the running belt includes at least one slat.

9. A treadmill, comprising:

a frame;

a rotatable element coupled to the frame;

a running belt at least partially supported by the rotatable element, wherein the running belt includes a running surface, at least a portion of which is curved; and

a first element and a second element, both of which are coupled to the running belt, and wherein the first element substantially surrounds the second element or the second element substantially surrounds the first element;

wherein one of the first and second elements and the running belt freely rotate in a first direction of rotation relative to the frame, however, in a second direction of rotation, opposite the first direction of rotation, the one of the first and second elements is substantially prevented from rotation relative to the frame to substantially prevent or resist rotation of the running belt relative to the frame.

10. The treadmill of claim **9**, wherein only one of the first and second elements is freely rotatable relative to the frame.

11. The treadmill of claim **9**, wherein the treadmill is non-motorized.

12. The treadmill of claim **9**, wherein the first and second elements at least partly form a one-way bearing.

13. The treadmill of claim **9**, further comprising a plurality of bearings coupled to the frame, at least one bearing of the plurality of bearings configured to at least partially support the running belt.

14. The treadmill of claim **9**, further comprising a braking system coupled to the frame and configured to selectively resist rotational movement of the running belt in the second direction.

15. A manually powered treadmill, comprising:

a frame;

at least one front running belt pulley coupled to the frame;

at least one rear running belt pulley coupled to the frame and spaced a distance from the at least one front running belt pulley;

a running belt at least partially supported by at least one of the at least one front running belt pulley and the at least one rear running belt pulley, wherein the running belt includes a running surface, at least a portion of which is curved; and

a safety device coupled to the frame and the running belt, the safety device having an element adapted for rotation relative to the frame in a first direction of rotation relative to the frame, however, in a second direction of rotation, opposite the first direction of rotation, the element is substantially prevented from rotation relative to the frame to substantially prevent or resist rotation of the running belt relative to the frame; and

wherein the safety device includes another element, wherein one of the element and the another element substantially surrounds the other of the element and the another element.

16. The manually powered treadmill of claim **15**, further comprising a plurality of bearings coupled to the frame, wherein at least one bearing in the plurality of bearings at least partially supports the running belt.

17. The manually powered treadmill of claim **15**, further comprising a braking system coupled to the frame, the braking system configured to selectively resist rotation of the running belt.

* * * * *