US005897461A

United States Patent [19]

Socwell

[11] **Patent Number: 5,897,461**

[45] **Date of Patent: *Apr. 27, 1999**

[54] **EXERCISE TREADMILL**

[75] Inventor: **Jeff D. Socwell**, North Ogden, Utah

[73] Assignee: **Precor Incorporated**, Bothell, Wash.

[*] Notice: This patent is subject to a terminal disclaimer.

[21] Appl. No.: **09/009,582**

[22] Filed: **Jan. 20, 1998**

Related U.S. Application Data

[63] Continuation-in-part of application No. 08/721,724, Sep. 27, 1996, Pat. No. 5,709,632.

[51] **Int. Cl.**[6] **A63B 22/02**

[52] **U.S. Cl.** **482/54**

[58] **Field of Search** 422/51, 54

[56] **References Cited**

U.S. PATENT DOCUMENTS

219,439	9/1879	Blend .	
1,211,765	1/1917	Schmidt	482/54
2,842,365	7/1958	Kelley .	
3,554,541	1/1971	Seaman	482/54
3,642,279	2/1972	Cutter	482/54
4,389,047	6/1983	Hall	482/54
4,616,822	10/1986	Truslaske et al.	482/54
4,938,473	7/1990	Lee et al.	482/54
5,100,127	3/1992	Melnick et al.	482/54
5,125,361	6/1992	Rowlands	482/54
5,135,458	8/1992	Huang .	
5,391,129	2/1995	Zaitsev	482/56
5,431,612	7/1995	Holden	482/54
5,575,740	11/1996	Piaget et al.	482/51
5,709,632	1/1998	Socwell	482/54

FOREIGN PATENT DOCUMENTS

0 144 294 6/1985 European Pat. Off. .

OTHER PUBLICATIONS

Document Information Copy of informational pamphlet entitled "Contour Jogger", by Battle Creek Equipment, Form CJ11, re Patent No. 3,642,279 (U10–above).

Primary Examiner—Lynne A. Reichard
Attorney, Agent, or Firm—Christensen O'Connor Johnson & Kindness PLLC

[57] **ABSTRACT**

A curved deck treadmill **(10)** is disclosed as comprising a support frame **(12)** having a first side **(20)** and a second opposing side **(22)** for supporting a deck **(56)** therebetween. The deck comprises a forward end **(58)**, a near end **(60)**, and an intermediate portion **(62)** disposed between the first and second ends. The intermediate portion of the deck is preferably formed in a substantially arcuate configuration such that a significant portion of the intermediate portion may be operably disposed dimensionally lower in longitudinal relation to the first and second ends of the deck. Further, a roller assembly **(14)** is provided preferably comprising a first roller **(78)** and second roller **(86)**. The first roller may be rotatably disposed contiguous the first end of the deck between the first side and the second side of the support frame. Correspondingly, the second roller is preferably disposed contiguous the second end of the deck between the first and second sides of the support frame. In operation, an endless belt **(16)** may be rotatably mounted in relation to the roller assembly **(14)** and operatively disposed in relation to the deck **(56)**, thereby providing a structurally supported arcuate shaped, movable surface on which a user may exercise.

38 Claims, 10 Drawing Sheets

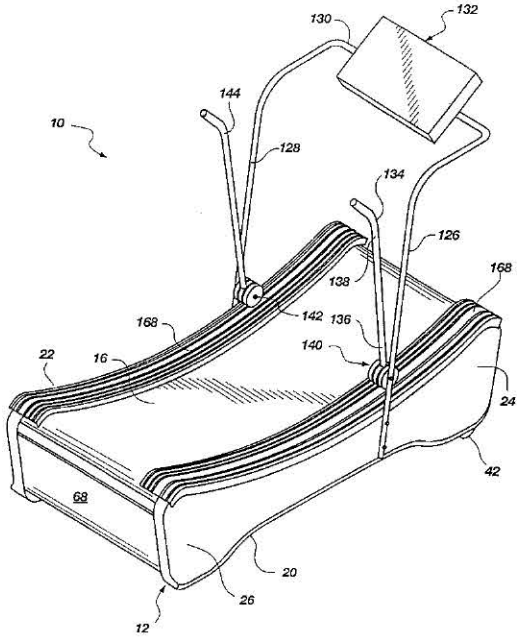

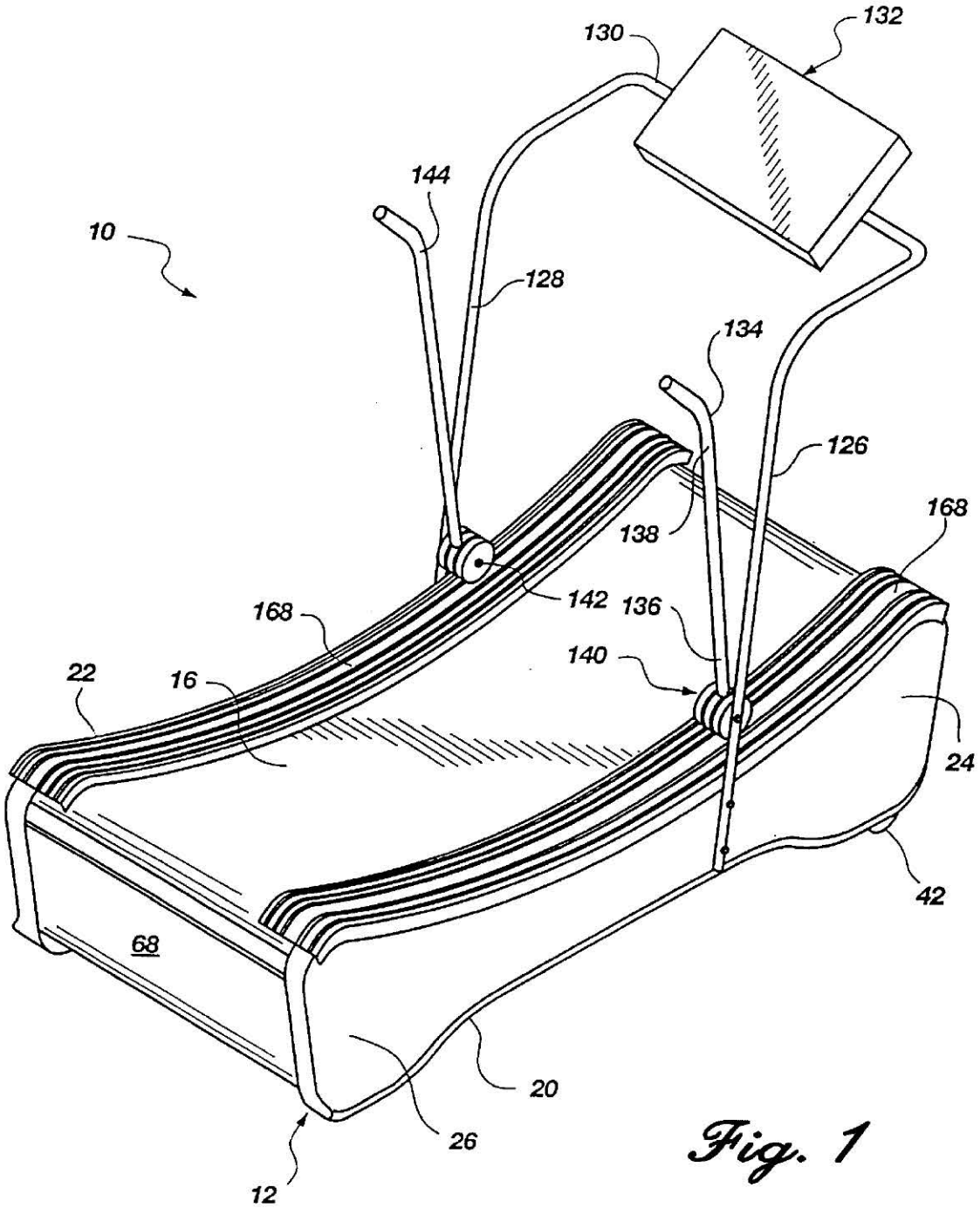
130
132
144
10
128
134
126
168
138
142
136
168
140
22
16
24
42
68
20
26
12

Fig. 1

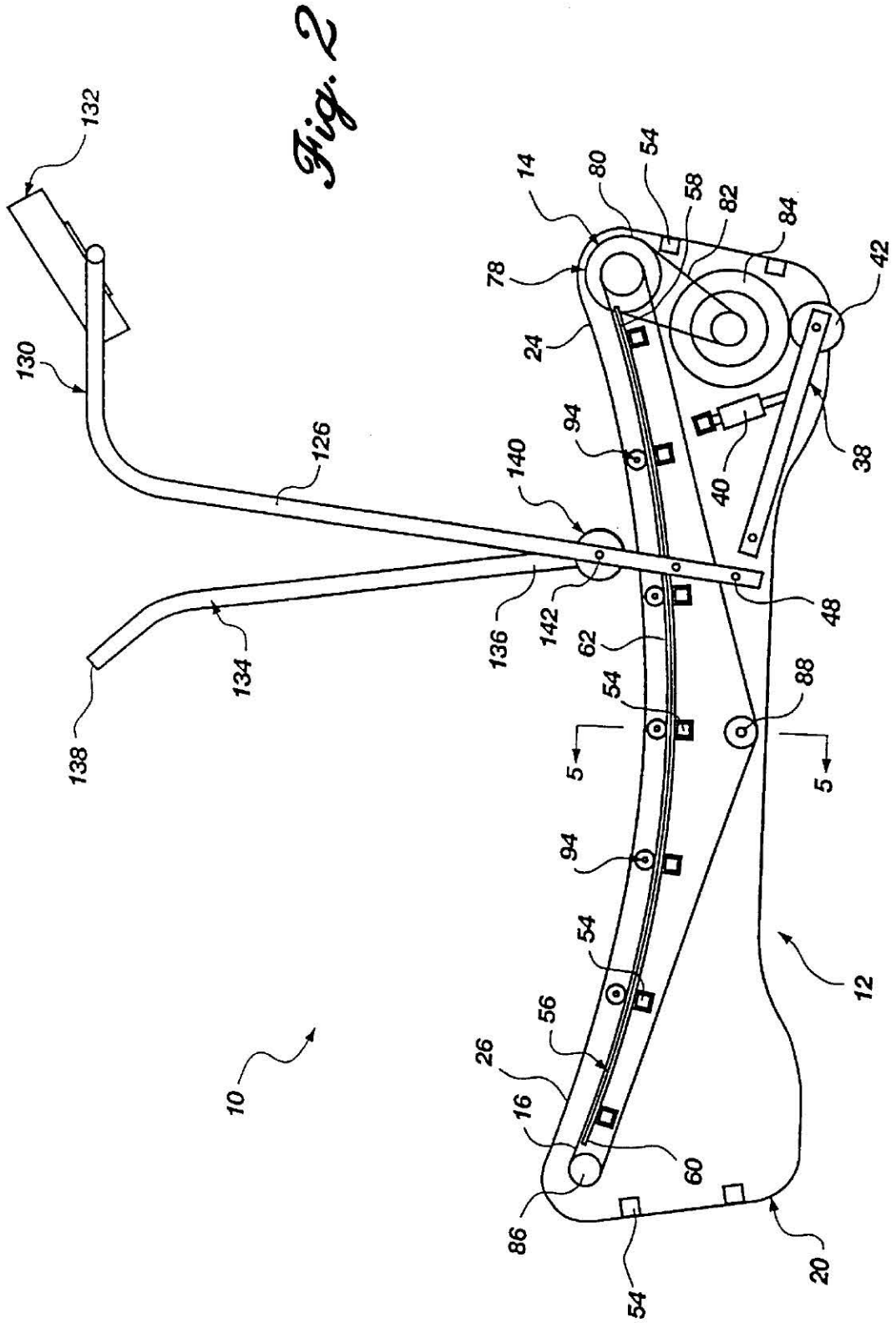
132
130
126
140
134
138
136
142
14
80
54
58
82
84
42
78
24
94
40
38
48
62
88
5
5
94
54
56
26
16
60
86
54
20
12
10

Fig. 2

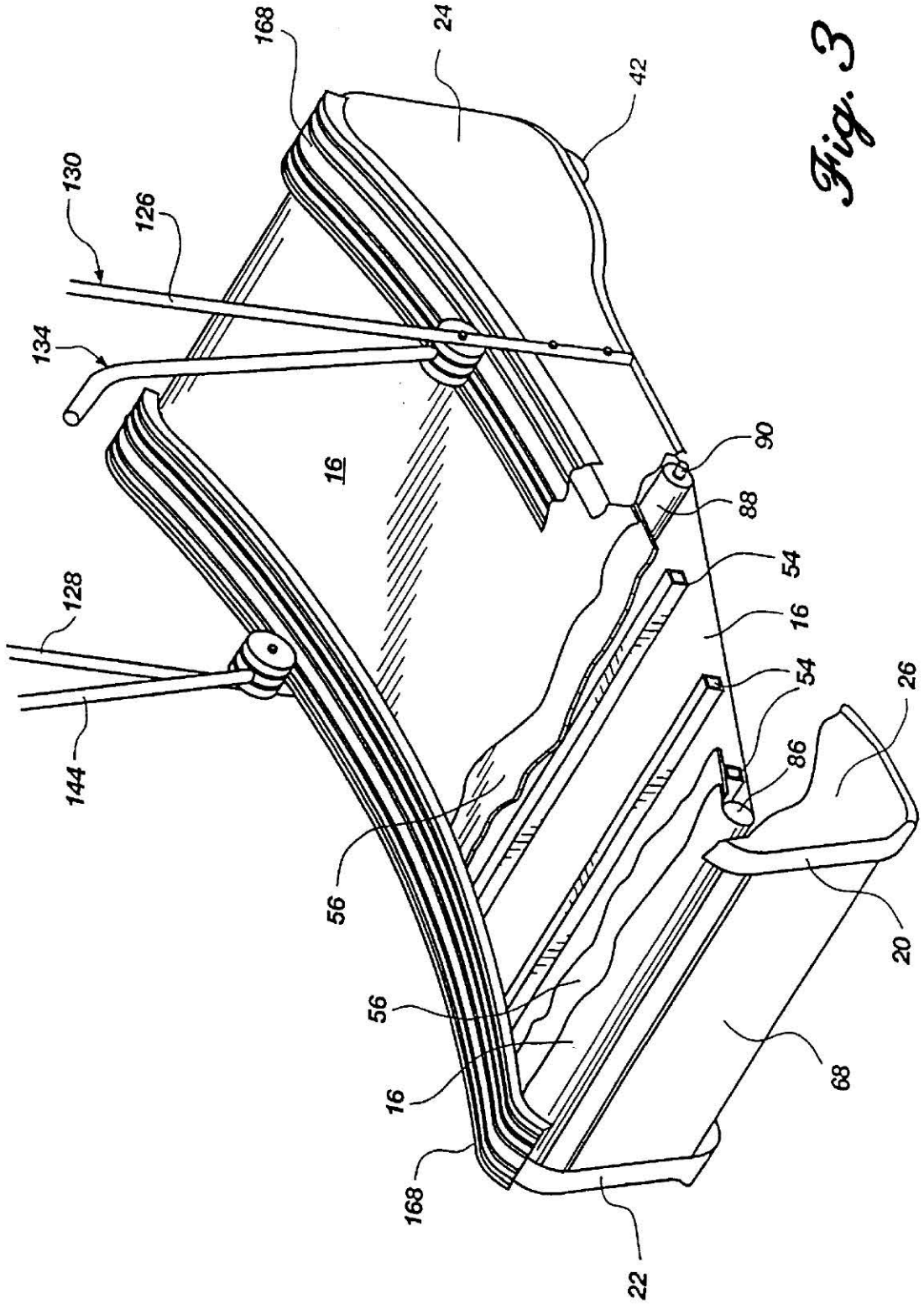
168
24
42
130
126
134
16
90
88
54
16
54
86
26
128
144
56
20
56
16
68
168
22

Fig. 3

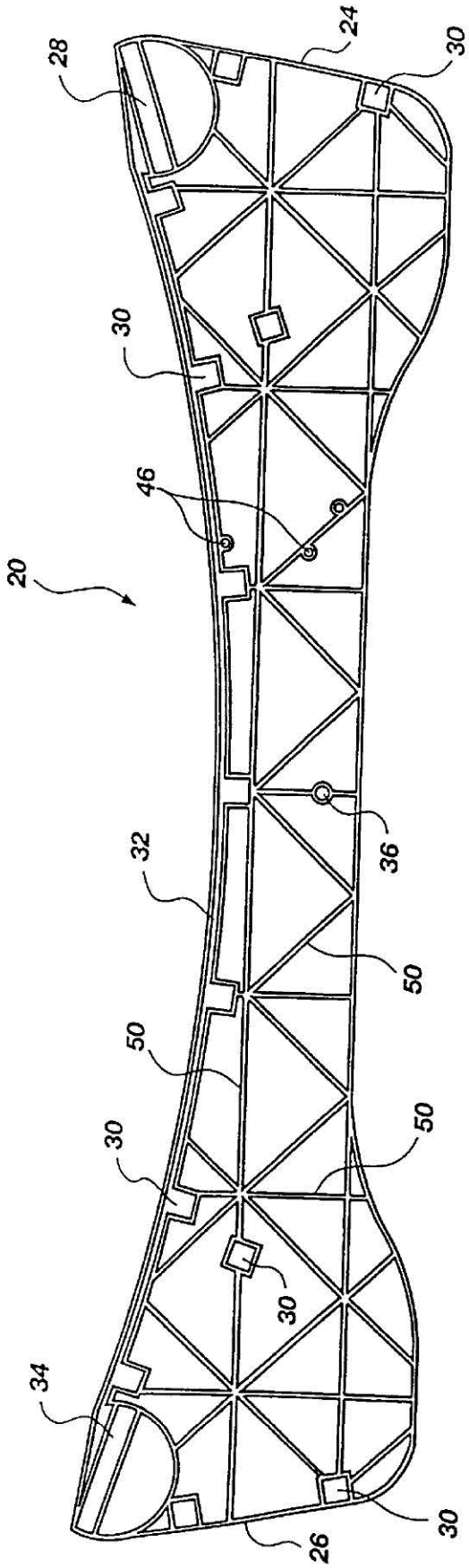

Fig. 4

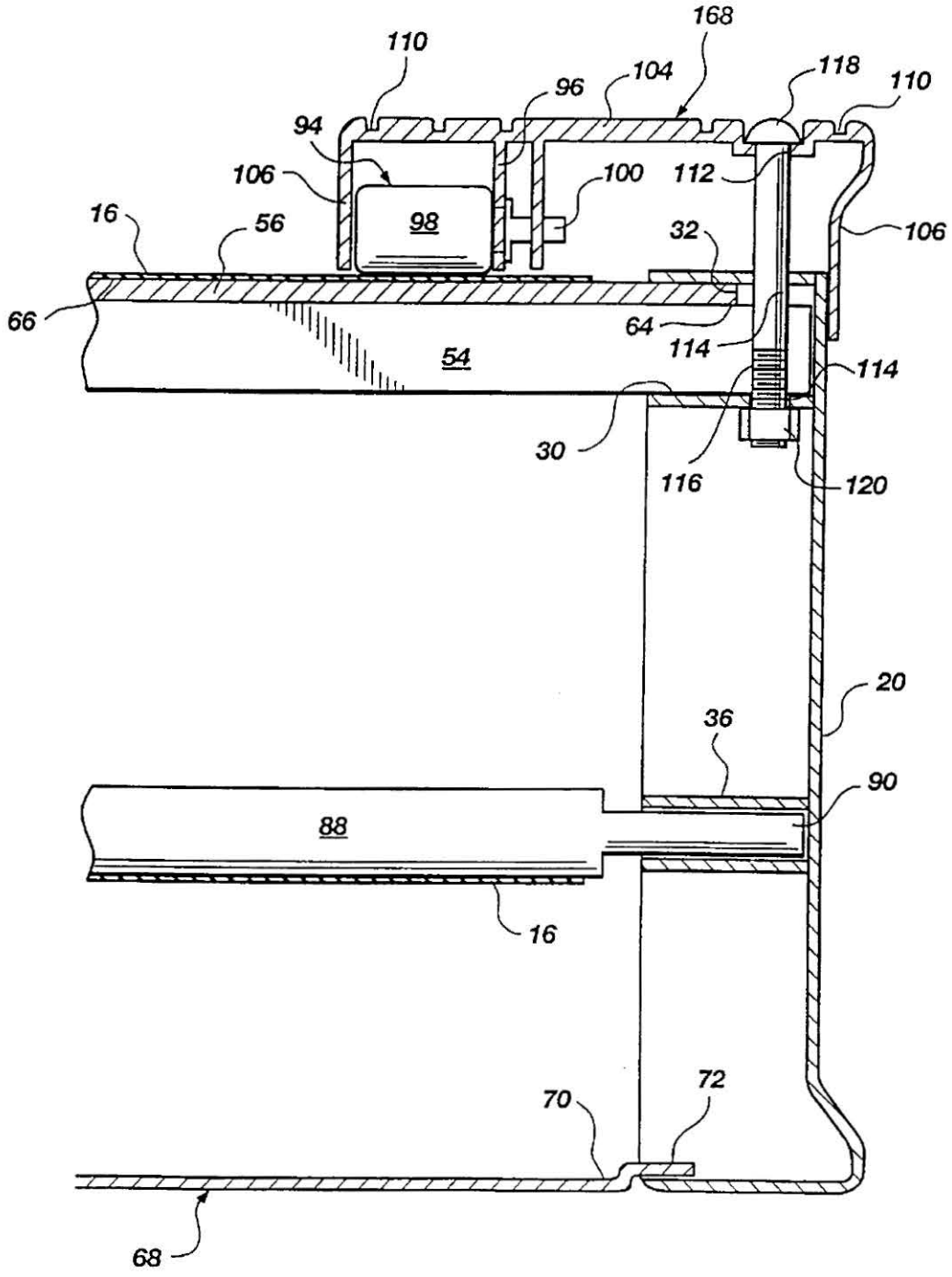
168
110
118
110
104
96
94
106
100
112
98
16
56
32
106
66
64
114
54
114
30
116
120
20
36
90
88
16
72
70
68

Fig. 5

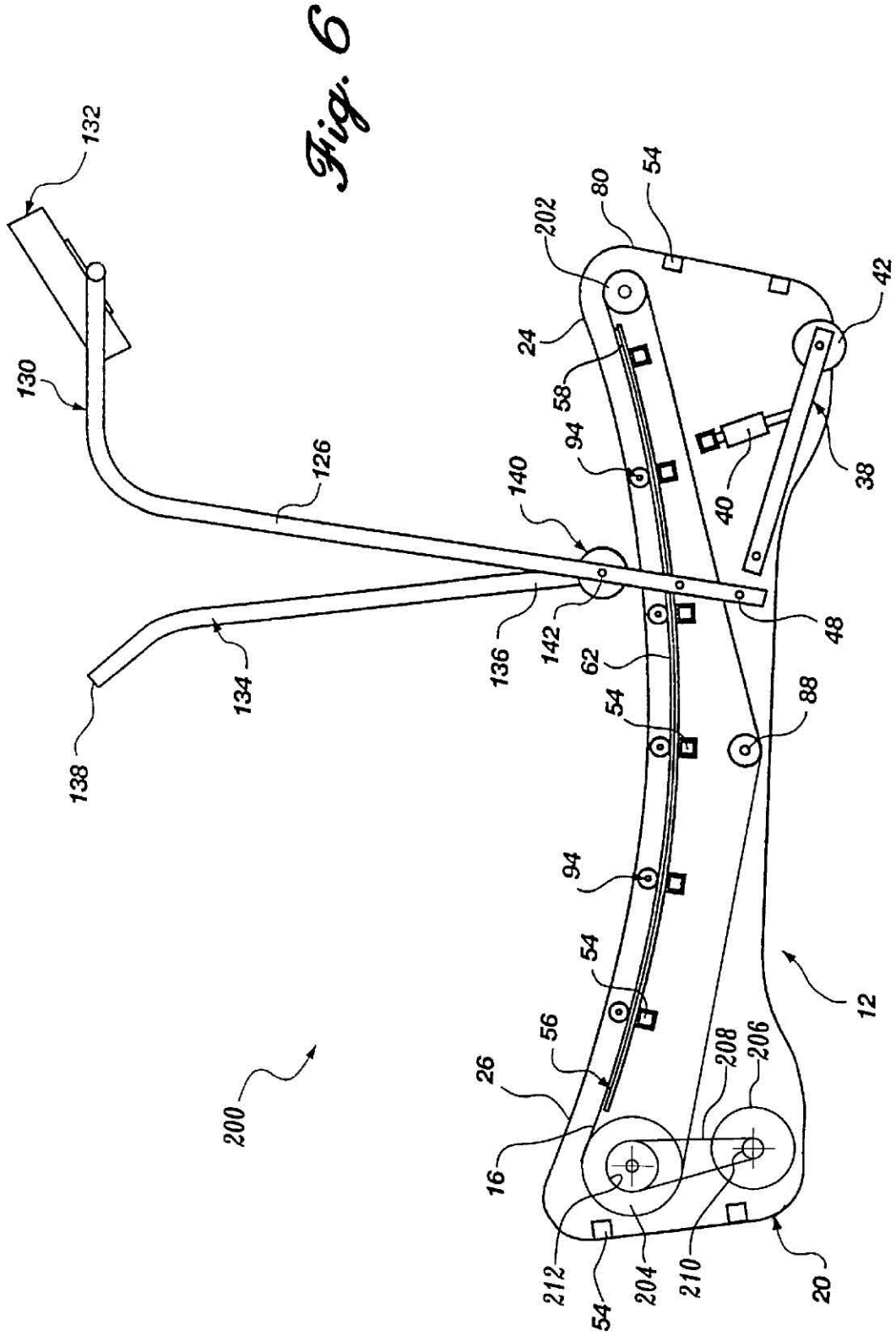
132
130
126
140
136
142
134
138
202
80
54
24
58
94
42
40
38
48
62
54
88
94
54
56
26
16
200
208
206
12
212
54
204
210
20

Fig. 6

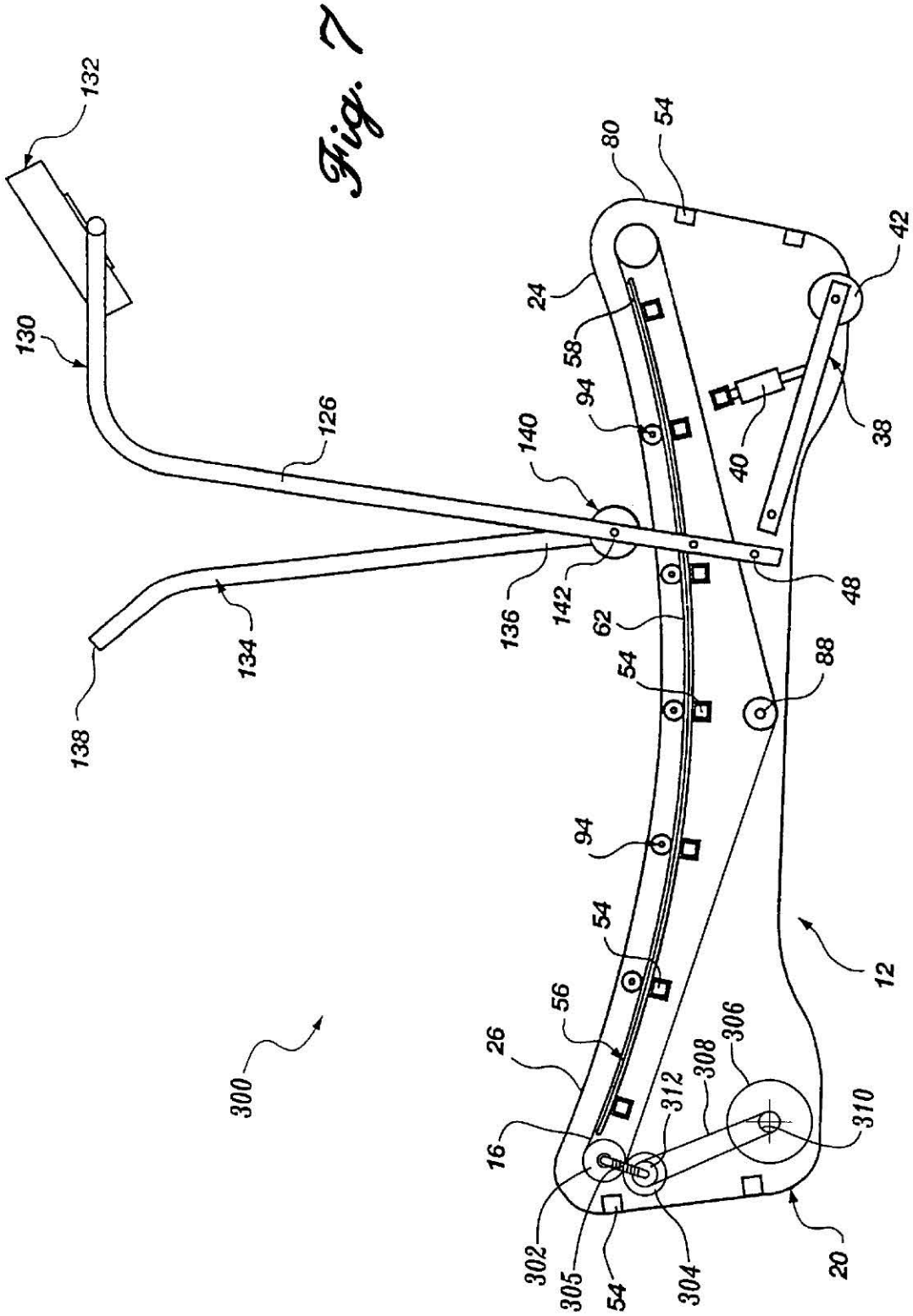
132
130
126
140
136
142
134
138
80
54
24
58
94
42
40
38
48
62
54
88
94
54
56
26
300
16
312
308
306
310
302
305
54
304
20
12

Fig. 7

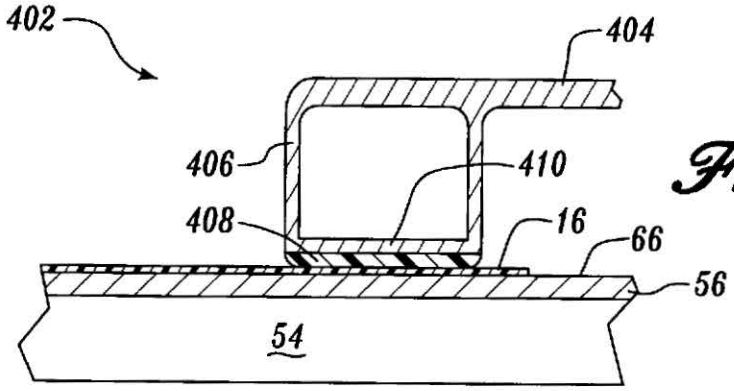

Fig. 8

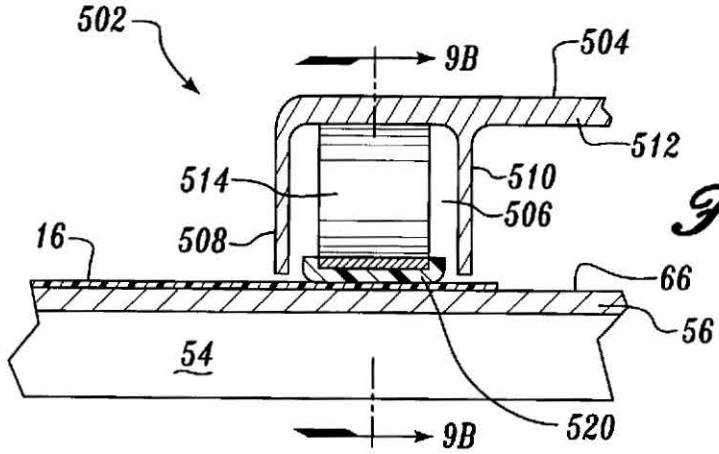

Fig. 9A

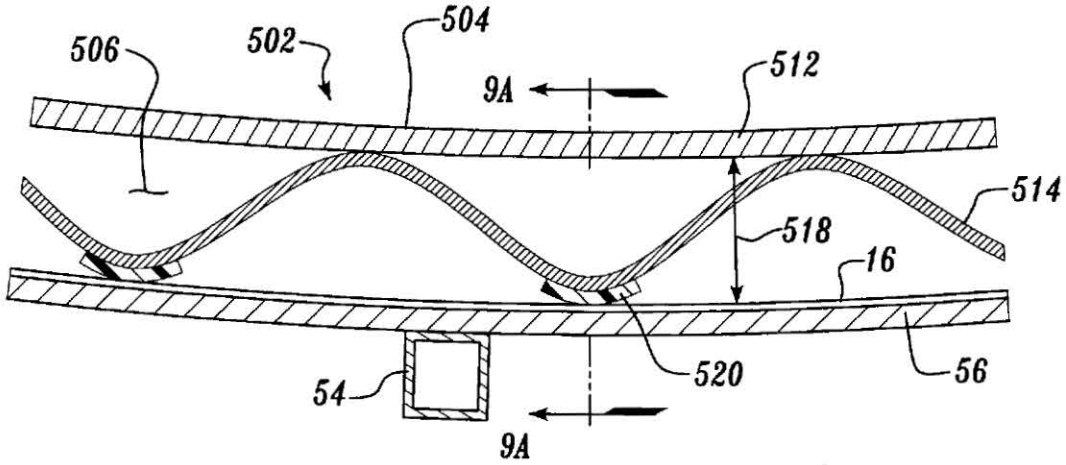

Fig. 9B

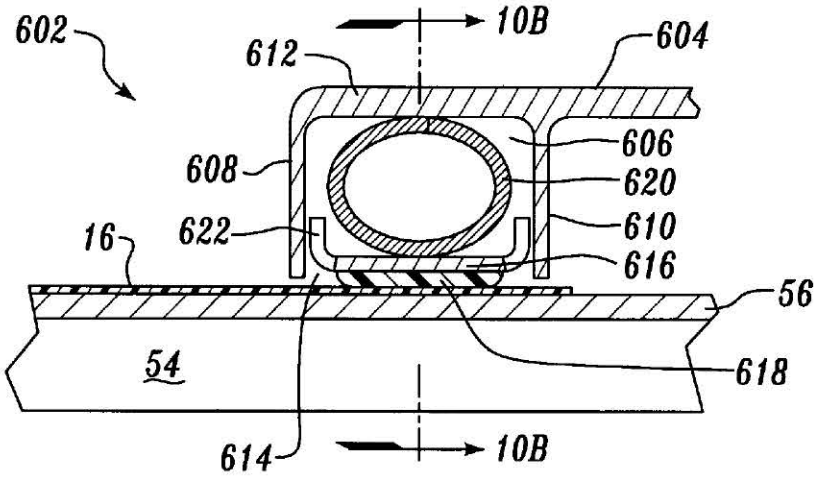

Fig. 10A

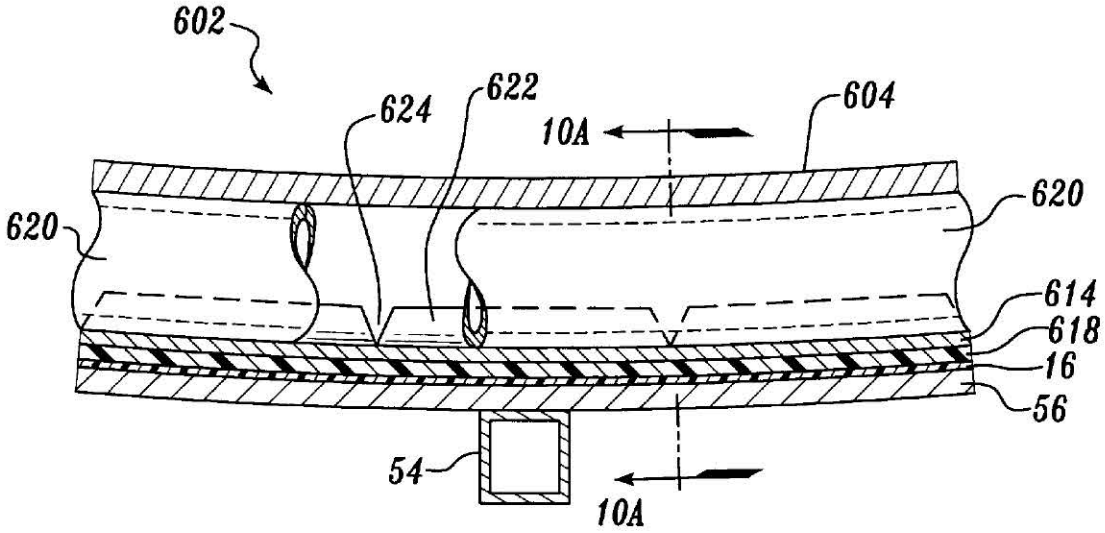

Fig. 10B

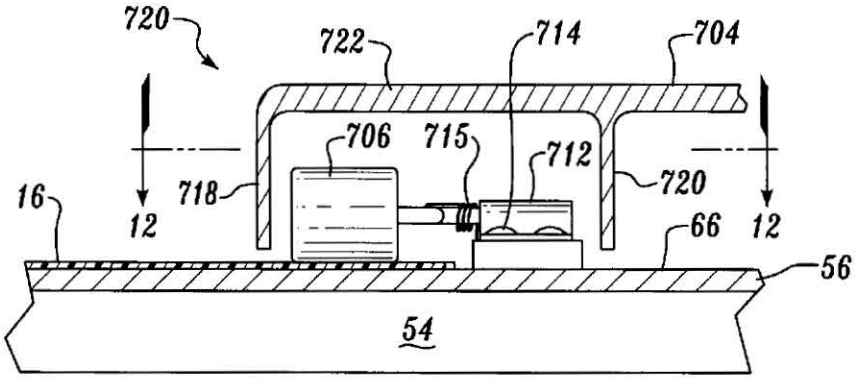

Fig. 11

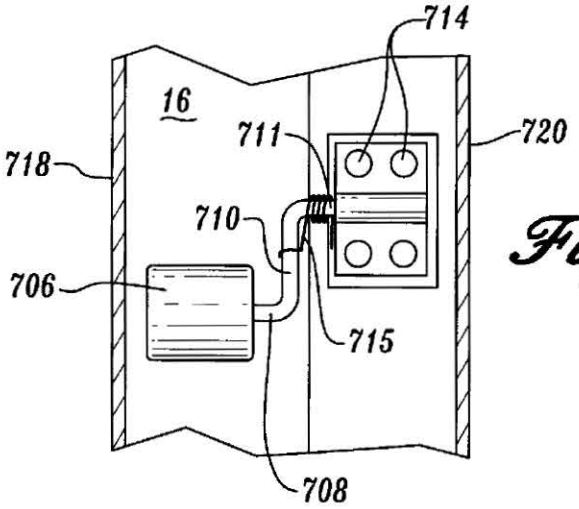

Fig. 12

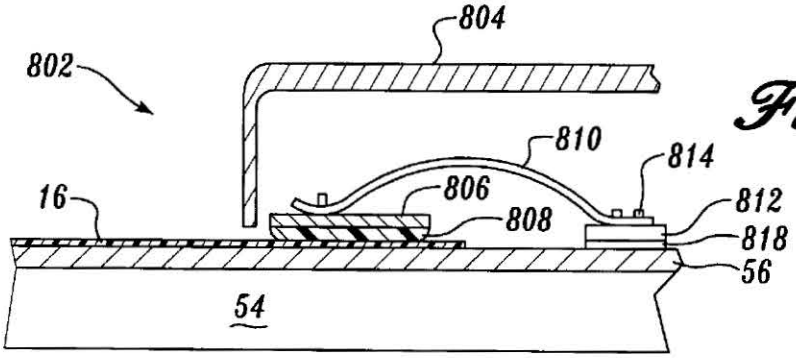

Fig. 13

EXERCISE TREADMILL

CROSS-REFERENCE TO RELATED APPLICATION

The present application is a continuation-in-part of application Ser. No. 08/721,724 filed on Sep. 27, 1996, now U.S. Pat. No. 5,709,632.

FIELD OF THE INVENTION

This invention relates to exercise treadmills and, more particularly, to novel systems and methods for providing a curved deck treadmill.

BACKGROUND OF THE INVENTION

In an effort to generally improve one's health, many people regularly exercise on treadmills by walking, jogging and/or running along a rotating surface. Although exercise treadmills have been found to be useful, the exercise treadmills of the prior art incorporate several inherent disadvantages.

Traditionally, prior art exercise treadmills may be constructed comprising an endless belt rotatably disposed in relation to a plurality of anti-friction rollers which are rigidly secured to a frame. A significant disadvantage of prior art exercise treadmills of this general type may include the uncomfortable vibrating sensation and/or bruising which is commonly realized by a user when attempting to exercise thereon. In addition, if sufficient frictional resistance is not found in relation to the rotation of the free-moving rollers rotatably engaging the belt, a user attempting to exercise on the treadmill may suffer from injuries sustained as a result of an uncontrolled rotation of the anti-friction rollers engaging the belt. In particular, if the rollers supportably disposed in relation to the endless belt are so easily movable, the user may potentially lose his equilibrium or balance and fall from the exercise treadmill resulting in possible injuries.

In an attempt to reduce the potential dangers associated with falling from prior art exercise treadmills comprising anti-frictional, free-moving rollers, those skilled in the art developed rollers providing frictional resistance in relation to the inherent rotation of the rollers and the belt. Prior art exercise treadmills having frictional resistance in relation to the rollers, however, are typically found to have a difficulty in maintaining a sufficient balance between too much resistance and not enough. If, for example, the rollers are incapable of storing sufficient kinetic energy to overcome the established frictional resistance, after the rollers of the treadmill begin to rotate, the belt supportably disposed in relation to the rollers generally will not have the tendency to continue in a rotational motion. In this regard, exercise treadmills of the prior art should generally balance these competing factors and provide a corresponding frictional resistance that accommodates a smooth, continuous movement of the belt, without encountering a series of stops or starts that may result in simultaneous jerking motions in the movement of the endless belt.

To address the foregoing problems associated with frictional resistant roller assemblies, those skilled in the art developed exercise treadmills having a motor disposed in relation to the rollers to provide a means for regulating a constant rotational speed of the rotating endless belt. As realized, prior art exercise treadmills incorporating a motor for driving the rotational speed of the rollers and belt commonly obviate the requirement to balance the resistance and stored kinetic energy customarily needed in prior art exercise treadmills embodying frictional resistance roller assemblies.

A meaningful disadvantage of prior art motorized exercise treadmills includes the general disposition or placement of the motor in relation to the roller assembly and belt. Accordingly, the motor may be generally disposed either in front of, behind, or at one side of the endless belt. The usual placement or disposition of the motor in relation to prior art exercise treadmills, however, typically minimizes valuable space which could be alternatively allocated to the disposition of other internally working components of the treadmill or for the purpose of increasing the walking surface provided by the dimensional size of the belt.

In accordance with prior art exercise treadmills comprising a flat, horizontal or slightly inclined movable surface, the endless belt supportably disposed in relation to the rollers will typically absorb the full impact force of the foot of a user repetitively depressed thereagainst. The impact force sustained by the endless belt of prior art exercise treadmills generally produces a breaking effect which causes temporary stalling of the rotational movement of the belt. This undesirable stalling motion of the belt typically alters the continuity of the user's exercise routine and may further institute jerking movements with each step of the user. As the force or pressure associated with the impact of the user's feet on the flat, horizontal surface increases, the more likely prior art exercise treadmills will realize this breaking effect. In this regard, a heavy person running on a horizontal belt supported by rollers engaging a frame will more likely introduce a consistent breaking effect on the rotational movement of the belt, than a lighter person walking on the same treadmill.

Similarly, exercise treadmills of the prior art were developed to provide a springy and resilient walking surface. Prior art exercise treadmills of this type and the flat surface treadmills of the prior art, however, commonly encourage a form of bobbing effect in relation to the up and down motion of the user's body in relation to the movable surface or belt of the treadmill. This continual bobbing up and down usually makes it nearly impossible for a user to reach and maintain a steady position on the surface of the belt of the treadmill. In addition, because the support structure disposed in relation to the rotating belt is formed to provide a springy and resilient walking surface, a user may feel as if he is wading on the treadmill, rather than walking, jogging or running. Consistent therewith, these types of prior art exercise treadmills are generally unable to satisfactorily simulate natural walking, jogging or running.

Another meaningful disadvantage of exercise treadmills of the prior art is the inherent danger associated with users tending to fall off the back end of the treadmill and become injured. Several attempts have been made to keep a user exercising on prior exercise treadmills from falling off the back end of the endless belt and from the treadmill frame. For example, prior art exercise treadmills were developed by those skilled in the art which include a belt for harnessing the user to the treadmill. Unfortunately, harnessing a user to the treadmill is often found to be as dangerous as falling off the back of the treadmill.

Additionally, exercise treadmills of the prior art may furnish a user with an upright handle to grasp while exercising. While somewhat useful in retaining the user's balance on the rotating endless belt, having to grasp a fixed handle may impede the natural body motion of a user attempting to exercise. Such an encumbrance may be feasible when a user is attempting to walk, but when a user begins to jog or run on prior art exercise treadmills, having to grasp a handle to keep centered on the treadmill may severely interfere with one's natural body motion and further abdicate the inherent physical advantages of the exercise routine.

Another meaningful disadvantage of prior art exercise treadmills is their general inability to reduce the physical impact to the joints and muscles of a user conducting general exercise routines in relation thereto. In this regard, an exercise treadmill which is capable of reducing the physical impact on the knees and back of a user will resolve several barriers left unsolved by known prior art devices, especially in light of providing an operative role in rehabilitative exercises.

Consistent with the foregoing and as illustrated by the number of prior art patents and other disclosures, efforts are continuously being made in an attempt to remedy the above-identified disadvantages. While prior art exercise treadmills may appear generally suitable for their intended purpose, they nevertheless leave much to be desired from the standpoint of effectiveness of operation, safety, reducing the physical impact to the joints and muscles of a user, and simulating the natural body motion of the user exercising thereon. In this regard, the present invention provides for a novel curved deck treadmill which overcomes several deficiencies of exercise treadmills of the prior art and resolves several problems left unsolved by the known prior art.

SUMMARY OF THE INVENTION

In view of the foregoing, it is a primary object of the present invention to provide a novel curved deck treadmill which provides a structurally supported arcuate shaped, movable surface on which a user may exercise.

It is also an object of the present invention to provide a curved deck treadmill which comprises a first end and a second end disposed substantially parallel in dimensional relationship and including a deck having an intermediate portion disposed therebetween comprising a substantially arcuate longitudinal configuration which is disposed lower in dimensional relation to the first and second ends.

Further, it is an object of the present invention to provide a curved deck treadmill which maximizes the upper surface area of the belt by effective disposition of a driving means.

It is a still further object of the present invention to provide a curved deck treadmill which substantially prevents a user from falling off the back end of the treadmill and whereby serving to keep the user centered on the upper surface of the treadmill without encumbering the natural body motion of the user exercising thereon.

In addition, it is an object of the present invention to provide a curved deck treadmill which is capable of providing meaningful walking, jogging, or running comfort in relation to the physiology of a user, thereby facilitating an upper surface which supportably provides for a longer stride with more flexibility.

Moreover, it is an object of the present invention to provide a curved deck treadmill which is capable of reducing the physical impact to the joints and muscles (e.g., the knees and back) of a user, thus providing an operative device having rehabilitative functionality.

Similarly, it is an object of the present invention to provide a curved deck treadmill which provides a continuous, smooth exercising motion.

Consistent with the foregoing objects, and in accordance with the invention as embodied and broadly described herein, a curved deck treadmill is disclosed in one embodiment of the present invention as including a support frame comprising a first side and a second opposing side having a deck supportably disposed therebetween. In preferred design, the deck comprises a first end, a second end, and an intermediate portion disposed between the first and second ends. The intermediate portion of the deck is preferably formed having a substantially arcuate configuration such that a significant portion of the intermediate portion may be operably disposed dimensionally lower in longitudinal relation to the first and second ends of the deck. Further, a roller assembly is provided preferably comprising a first and second roller. The first roller may be rotatably disposed contiguous the first end of the deck between the first side and the second side of the support frame. Correspondingly similar in construction and design, a second roller is preferably disposed contiguous the second end of the deck between the first and second sides of the support frame. In operation, an endless belt may be rotatably mounted in relation to the roller assembly and operatively disposed in relation to the deck, whereby providing a structurally supported arcuate shaped, movable surface on which a user may exercise.

BRIEF DESCRIPTION OF THE DRAWINGS

The foregoing aspects and many of the attendant advantages of this invention will become more readily appreciated as the same becomes better understood by reference to the following detailed description, when taken in conjunction with the accompanying drawings, wherein:

The foregoing and other objects and features of the present invention will become more fully apparent from the following description and appended claims, taken in conjunction with the accompanying drawings. Understanding that these drawings depict only typical embodiments of the invention and are, therefore, not to be considered limiting of its scope, the invention will be described with additional specificity and detail through use of the accompanying drawings in which:

FIG. **1** is a perspective view of one presently preferred embodiment of a curved deck treadmill;

FIG. **2** is a side elevational view of the embodiment of FIG. **1** exposing one presently preferred arrangement of the internal components of the present invention;

FIG. **3** is a cut-away view of the embodiment of FIG. **1**;

FIG. **4** is a side elevational view of one presently preferred embodiment of one side of a support frame of one presently preferred embodiment of the present invention;

FIG. **5** is an exploded, fragmentary cross-sectional view of the embodiment of FIG. **2** taken along lines **5**—**5** of FIG. **2**;

FIG. **6** is a side elevational view similar to FIG. **2** illustrating another preferred embodiment of the present invention;

FIG. **7** is side elevational view similar to FIGS. **2** and **6** illustrating a further preferred embodiment of the present invention;

FIG. **8** is an enlarged fragmentary cross-sectional view similar to a portion of FIG. **5** illustrating another preferred embodiment of the present invention;

FIG. **9**A is a view similar to FIG. **8** illustrating the further preferred embodiment of the present invention;

FIG. **9**B is an enlarged fragmentary cross-sectional view of the preferred embodiment of the present invention shown in FIG. **9**A taken substantially along lines **9**B—**9**B thereof;

FIGS. **10**A and **10**B are views similar to FIGS. **9**A and **9**B illustrating an additional preferred embodiment of the present invention;

FIGS. **11** is a view similar to FIG. **9**A illustrating another preferred embodiment of the present invention;

FIG. **12** is a top cross-sectional view of FIG. **11** taken substantially along lines **12—12** thereof; and,

FIG. **13** is a view similar to FIG. **11** illustrating another preferred embodiment of the present invention.

DETAILED DESCRIPTION OF THE PREFERRED EMBODIMENTS

It will be readily understood that the components of the present invention, as generally described and illustrated in the FIGURES herein, could be arranged and designed in a wide variety of different configurations. Thus, the following more detailed description of the embodiments of the system and method of the present invention, as represented in FIGS. **1** through **5**, is not intended to limit the scope of the invention, as claimed, but it is merely representative of the presently preferred embodiments of the invention.

The presently preferred embodiments of the invention will be best understood by reference to the drawings, wherein like parts are designated by like numerals throughout. One presently preferred embodiment of the present invention, designated generally at **10**, is best illustrated in FIGS. **1** and **2**. As shown, the curved deck treadmill **10** comprises a support frame **12** having a first side **20** and a second opposing side **22** and having a deck **56** supportably disposed therebetween. In preferred construction, the deck **56** comprises a first end **58**, a second end **60**, and an intermediate portion **62** disposed therebetween. The intermediate portion **62** of the deck **56** is preferably formed having an arcuate configuration such that a significant portion of the intermediate portion **62** may be operably disposed dimensionally lower in longitudinal relationship to the first and second ends **58**, **60** of the deck **56**. Further, a roller assembly **14** is provided preferably comprising a first and second roller **78**, **86**. The first roller **78** may be rotatably disposed contiguous the first end **58** of the deck **56** between the first side **20** and the second opposing side **22** of the support frame **12**. Correspondingly similar in construction and design, a second roller **86** is preferably disposed contiguous the second end **60** of the deck **56** between the first and second sides **20**, **22** of the support frame **12**. In preferred operation, a belt **16** is rotatably mounted in relation to the roller assembly **14** and operatively disposed in relation to the deck **56**, whereby providing a structurally supported arcuate shaped, movable surface on which a user may exercise.

As further illustrated in FIGS. **1** and **2**, at least one crossbar **130** may be structurally supported in relation to the support frame **12**. Preferably, the crossbar **130** functionally supports a console **132** substantially above the upper surface area of the support frame **12**, deck **56**, and belt **16**. Disposed in relation to the support frame **12**, the crossbar **130** may be formed having a generally U-shaped configuration. Further, the crossbar **130** may comprise a pivotal engagement **140** which provides a means for pivotally engaging one or more handles **134**, **144** in relation to the crossbar **130** at the opposing sides thereof **126**, **128**.

Structurally, the support frame **12** preferably comprises a first side **20** and a second opposing side **22** which, in combination, provide a means for structurally supporting the curved deck treadmill **10** and the various components thereof. In one preferred embodiment of the present invention, the support frame **12** is preferably formed of a substantially sturdy, rigid material which provides sufficient structural integrity to support the curved deck treadmill **10** and a user exercising thereon. For example, the support frame **12** may be formed of any of numerous organic, synthetic or processed materials which are mostly thermoplastic or thermosetting polymers of high molecular weight with or without additives, such as, plasticizers, auto oxidants, extenders, colorants, ultraviolet light stabilizers, or fillers, which can be shaped, molded, cast, extruded, drawn, foamed or laminated. It will be readily appreciated by those skilled in the art, however, that a wide variety of other suitable materials such as, metal or metal alloys, fiberglass, wood, ceramic, graphite and/or other composite or polymeric materials are possible which are consistent with the spirit and scope of the present invention.

Preferably, the support frame **12** may be formed having a first side **20** being disposed substantially parallel a second opposing side **22**, whereby providing a generally longitudinal alignment therebetween. In one presently preferred embodiment of the present invention, because the first side **20** and the second side **22** of the support frame **12** are relatively constructed having a substantially comparable structure and configuration, only the first side **20** will be operatively disclosed in detail herein. Whereas, any structural variation(s) which exist between the first side **20** and the second opposing side **22** will be further disclosed, whereby noting such variation(s).

As shown in FIGS. **1** and **3**, the first side **20** of the support frame **12** includes a first end **24** and a second opposing end **26**. The first and second ends **24**, **26** of the first side **20** are preferably disposed in corresponding relation to the first and second ends **58**, **60** of the deck **56**. As best illustrated in FIGS. **2** and **4**, a first journal housing **28** may be formed substantially adjacent the first end **24** of the first side **20** of the support frame **12**. Preferably, the first journal housing **28** is formed having an opening readily adapted to receive at least one journaling end (not shown) of the first roller **78**. Similarly, a second journal housing **34** may be formed substantially adjacent the second end **26** of the first side **20** of the support frame **12** and include an opening readily adapted to receive at least one journaling end (not shown) of the second roller **86**.

In preferred design, the journal housings **28**, **34** formed at the first and second ends **24**, **26** of the first side **20** of the support frame **12**, respectively, may be formed having an opening which provides a means for facilitating the introduction of the journaling ends of the respective first and second rollers **78**, **86**. Preferably, the opening comprises an elongated slot wherein the journaling ends of the first and second rollers **78**, **86** may be slidably adjusted. By introducing the journaling ends of the first and second rollers **78**, **86** in the respective elongated slots formed in the journal housings **28**, **34** of the support frame **12**, the horizontal displacement of the belt **16** may, accordingly, be adjusted in relation to the disposition of the first and second rollers **78**, **86**.

In one presently preferred embodiment of the present invention, a third journal housing **36** may be formed in the first side **20** of the support frame **12**, as best illustrated in FIGS. **2**, **4** and **5**. Preferably formed between the first journal housing **28** and the second journal housing **34** of the first side **20** of the support frame **12**, the third journal housing **36** may be disposed dimensionally lower than the substantially horizontal displacement of the first and second journal housings **28**, **34**. Consistent with the first and second journal housings **28**, **34**, the third journal housing **36** is preferably formed including an opening having an internal periphery sufficient for introducing at least one journaling end **90** of the third roller **88** therein, as shown in FIG. **5**. Preferably, the journaling end **90** of the third roller **88** is formed having a substantially cylindrical configuration comprising an outer diameter which is less than the internal diameter of the

opening formed in the third journal housing **36**. It will be readily appreciated by those skilled in the art, however, that other shapes, sizes and/or configurations of the journal housings **28**, **34**, **36** and/or the internal openings formed therein are possible as such to provide a means for introducing at least one journaling end of the first, second and third rollers **78**, **86**, **88**, respectively, therein.

In accordance with one presently preferred embodiment of the present invention, the journal housings **28**, **34**, **36** formed in the first side **20** of the support frame **12** may be disposed in operative alignment with the journal housings formed in the second side **22** of the support frame **12**. This arrangement of the journal housings **28**, **34**, **36** in both the first and second sides **20**, **22** of the support frame **12** preferably provides for the introduction and retention of the journaling ends of the corresponding rollers **78**, **86**, **88**, thereby facilitating a means for rotating the rollers on a substantially fixed axis.

Although the journal housings **28**, **34**, **36** of the first and second sides **20**, **22** of the support frame **12** preferably receive the journaling ends of the respective rollers **78**, **86**, **88**, it will be apparent to those skilled in the art that other mechanisms may be constructed and/or numerous other relative dispositions of the respective rollers may be anticipated in accordance with the inventive principles disclosed herein in order to achieve the desired results of the present invention. It is intended, therefore, that the examples provided herein be viewed as exemplary of the principles of the present invention, and not as restrictive to a particular structure or structures for implementing those principles.

Referring back to FIGS. **1** and **2**, the belt **16** operably disposed in relation to the rollers **78**, **86**, **88** may be formed comprising an endless construction which preferably consists of a sufficiently sturdy material. For example, the belt **16** may be formed of an endless sheet of a flexible canvas or a rubber-impregnated material. The belt **16** may alternatively be formed of a thin, flat band of steel or a sufficiently tenacious polymeric or composite material. As will be readily appreciated by those skilled in the art, the belt **16** can, of course, be formed of a wide variety of suitable materials which are consistent with the spirit and scope of the present invention.

In accordance with one preferred arrangement, the belt **16** is rotatably disposed in relation to the first roller **78**, the second roller **86**, and the third roller **88**, whereby each roller **78**, **86**, **88** is preferably disposed in structural relation to the support frame **12** at their respectively preferred positions, as disclosed above. The tension of the belt **16** may be readily tightened or loosened in relation to the disposition of the first and second rollers **78**, **86** engagably disposed in the respective elongated slot of the journal housings **28**, **34**. Moreover, a conventional fixation member (not shown) may be utilized to provide a means for disposing the journaling ends of the rollers **78**, **86**, **88** in a fixed and/or adjustable relationship to the respective opening or elongated slot formed in the journal housings **28**, **34**, **36** of the support frame **12**.

Referring back to the features of the support frame **12**, a deck slot **32** may be formed which extends substantially the longitudinal length of the first side **20**, as shown in FIG. **4**. Preferably, the deck slot **32** is disposed such that the deck **56** may be insertably disposed therein. In one presently preferred embodiment of the present invention, the deck slot **32** comprises a substantially curvilinear configuration which substantially corresponds in dimensional shape to the arcuate configuration of the intermediate portion **62** of the deck **56**. Similarly, the deck slot **32** is preferably formed having a sufficient size and depth sufficient to retain at least one longitudinal side of the deck **56** engagably inserted therein, such that any possible flexing of the deck **56** from the weight of a user will not generally unseat the deck **56** from the deck slot **32**. Whereas, the opposing longitudinal side of the deck **56** is preferably disposed within the deck slot **32** formed in the second side **22** of the support frame **12**.

In preferred construction, the deck **56** is formed of a substantially sturdy, rigid material to provide sufficient structural integrity to adequately support the weight of a user exercising on the curved deck treadmill **10**. In one presently preferred embodiment of the present invention, the deck **56** is preferably formed consisting of a wood laminate having an upper surface **66** that may be impregnated with a wax material to provide a means for reducing the coefficient of friction acting thereon. In an alternate embodiment, the deck **56** may be formed of any of numerous organic, synthetic or processed materials which are mostly thermoplastic or thermosetting polymers of high molecular weight with or without additives, such as, plasticizers, auto oxidants, extenders, colorants, ultraviolet light stabilizers, or fillers, which can be shaped, molded, cast, extruded, drawn, foamed or laminated. It will be readily appreciated by those skilled in the art, however, that a wide variety of other suitable materials such as, metal or metal alloys, fiberglass, ceramic, graphite and/or other composite or polymeric materials are possible which are consistent with the spirit and scope of the present invention.

As shown in FIG. **4**, the first side **20** of the support frame **12** may comprise one or more rib seats **30** disposed adjacent the deck slot **32**. The rib seats **30** are preferably formed having an internal surface area sufficient for seating at least one end of a support rib **54** disposed therein. As best illustrated in FIG. **3**, one or more support ribs **54** extend substantially transverse dimensionally between the first and second sides **20**, **22** of the support frame **12**. In preferred construction, the support ribs **54** provide a means for structurally supporting the deck **56**. Similarly, the rib seats **30** are preferably formed such that when the support ribs **54** are introduced therein, the deck **56** may be readily disposed within the respective deck slots **32** formed in the first and second sides **20**, **22** of the support frame **12** and structurally supported by the support ribs **54** disposed in relation thereto.

In one presently preferred embodiment of the present invention, the support ribs **54** are formed of a sufficiently sturdy, rigid material sufficient to provide adequate structural support to the deck **56**. For example, the support ribs **54** may be formed of a rigid metal or metal alloy. It will be readily appreciated by those skilled in the art, however, that a wide variety of other suitable materials such as, fiberglass, ceramic, graphite, any of numerous organic, synthetic or processed materials which are mostly thermoplastic or thermosetting polymers of high molecular weight with or without additives, such as, plasticizers, auto oxidants, extenders, colorants, ultraviolet light stabilizers, or fillers, which can be shaped, molded, cast, extruded, drawn, foamed or laminated, and/or other composite materials are possible that are consistent with the spirit and scope of the present invention.

In current design, the support ribs **54** are formed having a generally elongated configuration which is capable of being seated in a corresponding rib seat **30** disposed in a spaced-apart relation in the first side **20** and the second opposing side **22** of the support frame **12**. Accordingly, the rib seats **30** have a corresponding dimensional shape which provides a means for introducing and retaining the ends of the support ribs **54** therein.

As will be readily appreciated, the quantity and disposition of rib seats **30** and engaging support ribs **54** supportably

disposed in relation to the support frame **12** may vary according to the structural integrity generally required to support the deck **56** and the weight of a user. For example, the addition of rib seats **30** and support ribs **54** near the first and second ends **24, 26** of the support frame **12** may increase the overall structural integrity of the deck **56** in relation to the support frame **12**. Accordingly, those skilled in the art will readily recognize other possible modifications and adaptations which are consistent with the spirit and scope of the present invention.

In addition to the support ribs **54** which provide a means for engagably supporting the first and second sides **20, 22** of the support frame **12**, the support frame **12** may include a plurality of structural reinforcement members **50** disposed in relation to the first and second sides **20, 22**, as best shown in FIG. **4**. As illustrated, the plurality of reinforcement members **50** may be disposed horizontally, vertically, and/or diagonally throughout the sides **20, 22** to provide a means for increasing the ability of the first and second sides **20, 22** to resist buckling or a loss of structural integrity. In one presently preferred embodiment of the present invention, the structural members **50** are preferably formed along the interior surface of the first side **20** of the support frame **12**. It will be readily appreciated by those skilled in the art, however, that other structural reinforcing components may be added to further enhance the supportable nature of the support frame **12** or for enhancing the inherent aesthetics of the device.

In one presently preferred embodiment of the present invention, the first side **20** of the support frame **12** may comprise at least one conventional foot roller assembly **38** mountably disposed in relation thereto, as best shown in FIG. **2**. The foot roller assembly **38** preferably includes one or more wheels **42** rotatably connected thereto in such a manner so as to provide a means for readily moving the curved deck treadmill **10**. The foot roller assembly **38** may further comprise a force absorbing member **40** disposed in relation thereto which provides a means for absorbing any forces or shocks sustained while moving the present invention from one location to another. Correspondingly, the force absorbing member **40** may consist of a conventional shock absorber which is useful over rough surfaces in absorbing sudden movement, bounces, etc.

The force absorbing member **40** may also include a means for stabilizing the curved deck treadmill **10** at an elevated position so as to provide a means for inclining the front end **24** of the support frame **12** for increasing user workout. In this regard, the force absorbing member **40** may comprise a gas or oil filled shock or, in the alternative, an electric gear motor having a locking shaft which elevates the front end **24** of the support frame **12**. It will be apparent that other mechanisms may be constructed in accordance with the inventive principles set forth herein. It is intended, therefore, that the example provided herein be viewed as exemplary of the principles of the present invention, and not as restrictive to a particular structure for implementing those principles.

As mentioned above, the second opposing side **22** of the support frame **12** is correspondingly similar in dimensional structure and configuration to that of the first side **20**. Accordingly, the components disposed on or in relation to the first side **20** of the support frame **12** are preferably disposed on or in relation to the second side **22**. The incorporation of substantially comparable sides **20, 22** of the support frame **12** comprises one presently preferred embodiment. It is intended, therefore, that the example provided herein be viewed as exemplary of the principles of the present invention, and not as restrictive to a particular structure for implementing those principles. Accordingly, the utilization of a support frame having correspondingly similar sides is thus by way of illustration only and not by way of limitation.

Referring now to FIG. **5**, the curved deck treadmill **10** may include one or more belt securing assemblies **94** which provide a means for retaining the endless belt **16** in a curvilinear configuration being substantially flush with the upper surface **66** of the deck **56**. Preferably, the belt securing assemblies **94** provide a means for substantially conforming the inherent flexible nature of the belt **16** to the arcuate configuration of the intermediate portion **62** of the deck **56**. In design, one or more belt securing assemblies **94** may be disposed in spaced-apart relation along the upper surface **66** of the intermediate portion **62** of the deck **56**, as shown in FIG. **2**, to sufficiently retain the belt **16** in operable disposition to the deck **56**.

In one presently preferred embodiment of the present invention, the belt securing assembly **94** comprises a roller **98** having an axle **100** which rotatably engages a mounting bracket **96**. The mounting bracket **96** is preferably disposed in relation to the roller **98** such that the roller **98** may engage the belt **16**, thereby substantially retaining a side portion of the belt **16** substantially flush with the deck **56**. In preferred operation, as the belt **16** rotates in relation to the roller assembly **14**, the rollers **98** of the belt securing assembly **94** preferably rotate in relation thereto. It will be apparent that other belt securing mechanisms may be constructed in accordance with the inventive principles set forth herein. Correspondingly, those skilled in the art may recognize other possible modifications and/or adaptations which are consistent with the spirit and scope of the present invention.

Referring back to FIGS. **1** and **3**, a cover member **68** may be disposed in connection between the first and second sides **20, 22** of the support frame **12**. The cover member **68** is preferably formed providing a means for covering the internal components of the curved deck treadmill **10**. In current design, the cover member **68** may be removably disposed in connection to the first and second sides **20, 22** of the support frame **12** whereby allowing for easy access to the internal working components of the present invention. For example, the cover member **68** may be attached to the support frame **12** by a series of tabs **72** disposed along the outer edge **70** of the cover member **68** and arranged in such a manner so as to removably engage the first and second sides **20, 22**, as illustrated depicted in FIG. **5**. Additionally, a cover member **168** may provide a means for covering the belt securing assemblies **94** disposed in relation to the first and second sides **20, 22** of the support frame **12**.

In preferred structure, the cover member **168** which is disposed in relation to covering the belt securing assembly **94** may comprise a horizontal portion **104** disposed in relation to one or more vertical sides **106**. As discussed above, the mounting bracket **96** may be fixed to the cover member **168** such that it provides a means for assisting in the rotational alignment of the roller **98** of the belt securing assembly **94**. Preferably, at least one vertical side **106** is disposed adjacent the roller **98** of the belt securing assembly **94** such that the vertical side **106** and the horizontal portion **104** of the cover member **168** substantially cover the belt securing assembly **94**. Further, one or more longitudinal grooves **110** may be formed in the exterior surface of the horizontal portion **104** of the cover member **168**, as best shown in FIGS. **1, 3** and **5**. As will be readily appreciated, the cover member **168** may include other structural components for either functional or aesthetic reasons.

In one presently preferred embodiment of the present invention, the cover members **68, 168** are preferably formed

of a substantially sturdy, semi-flexible material. For example, the cover members **68**, **168** may be formed of any of numerous organic, synthetic or processed materials which are mostly thermoplastic or thermosetting polymers of high molecular weight with or without additives, such as, plasticizers, auto oxidants, extenders, colorants, ultraviolet light stabilizers, or fillers, which can be shaped, molded, cast, extruded, drawn, foamed or laminated. It will be readily appreciated by those skilled in the art, however, that a wide variety of other suitable materials such as, metal or metal alloys, fiberglass, wood, ceramic, graphite and/or other composite or polymeric materials are possible which are consistent with the spirit and scope of the present invention.

Referring now to FIG. **5**, the belt securing assembly **94** and the corresponding cover member **68** may be attached to the support frame **12** by a conventional fastening means. For example, in one presently preferred embodiment of the present invention, a bolt **118** may be disposed through an aperture **112** formed in the cover member **168** and at least one aperture **114** formed in a respective side **20**, **22** of the support frame **12**. Alternatively, the bolt **118** may be disposed through an aperture **116** formed in a support rib **54** which may further serve to secure the support rib **54** to the support frame **12**. Moreover, if a longitudinal side **64** of the deck **56** were to extend past the apertures formed in the cover member **168** and the support frame **12**, a corresponding through-bore (not shown) may be formed in the deck **56** and disposed in alignment with the other apertures. If desired, a locking nut **120** may be disposed in relation to a first end of the bolt **118** to secure the preferred engagement outlined above between the various components of the curved deck treadmill **10**.

In one presently preferred embodiment of the present invention, a driving means **84** is operably connected to at least one roller to enable the rotation of the belt **16**. The driving means **84** preferably comprises a conventional electric motor for rotating the belt **16**. In preferred arrangement, a pulley **80** is disposably mounted to the first roller **78** at the first end **24** of the support frame **12**. In operation, a pulley belt **82** may be engagably disposed between the pulley **80** and the motor **84** to provide a means for correspondingly rotating the first roller **78** upon the forced rotation of the pulley belt **82** by the motor **84**.

As best illustrated in FIG. **2**, the motor **84** may be mounted to the support frame **12** substantially adjacent the first end **58** and beneath the deck **56** by means of a fixation bracket (not shown). Alternatively, it will be readily appreciated by those skilled in the art, however, that the motor **84** may be engagably disposed in relation to the second or third rollers **86**, **88** to enable the rotation of the belt **16**.

In an alternate embodiment, the curved deck treadmill **10** or the present invention may be implemented without a driving means engagably disposed to a roller in order to facilitate the forced rotation of the belt **16**. If so implemented, the rollers **78**, **86** and **88** and the deck **56** should be generally calibrated in relation to the belt **16** to provide an optimal frictional resistance to enable a user to safely walk, jog, and/or run thereon, while still providing sufficient resistance to enable a user to exercise.

Referring now to FIGS. **1**, **2** and **3**, a crossbar **130** may be preferably formed having a generally U-shaped configuration and may be disposed in fixed relation to the first and second sides **20**, **22** of the support frame **12** by means of conventional fasteners. The fasteners may comprise one or more internally threaded seats **46** (as best shown in FIG. **4**) wherein an appropriately sized fastener **48** may be introduced to provide a threaded or force-fit engagement therebetween for securing the first side **126** of the cross-bar **130** to the first side **20** of the support frame **12**. A second end **128** of the crossbar **130** may be similarly mounted in a preferably fixed engagement to the second side **22** of the support frame **12**. Although the crossbar **130** of the present invention is illustrated and described in connection with a generally U-shaped configuration, those skilled in the art will recognize that various other geometrical configurations are likewise suitable. The use of a generally U-shaped configuration is thus by way of illustration only and not by way of limitation.

In one presently preferred embodiment of the present invention, a console **132** is preferably mounted in relation to the cross-bar **130**. Supportably disposed by the cross-bar **130**, the console **132** may be mounted substantially above the support frame **12**, the deck **56**, and the belt **16** such that a user may view the information displayed on the console **132**. The console **132** preferably comprises a processor, a display, and may include input keys for entering user programmable options. Similarly, the console **132** may provide a variety of feedback data, such as elapsed time, speed, distance, pulse rate, and/or other functions and features, as desired.

It will be appreciated by those skilled in the art that the console **132** may incorporate additional external components and/or devices in carrying out its function. For example, the console **132** may include one or more sensors for ascertaining the rotational speed of the belt **16**, a sensor for determining the pulse or heart rate of a user, a device for controlling the speed of the motor, etc. Although such external components and/or devices are not specifically shown in the FIGURES, it is clearly contemplated by the present invention that such electronic and/or mechanical equipment are readily anticipated herein for utilization with the present invention.

In preferred structure, the crossbar **130** may comprise a pivotal engagement **140** which provides a means for pivotally engaging one or more handles **134**, **144** in relation to the opposing sides **126**, **128** of the crossbar **130**, as illustrated in FIGS. **1**, **2** and **3**. The handles **134**, **144** may be constructed of any suitable rigid material. For example, the handles **134**, **144** may be formed of a metal or metal alloy, wood, fiberglass, graphite, ceramic, plastic or any other suitable composite material. Additionally, the handles **134**, **144** may include a gripping member (not shown) preferably disposed substantially adjacent the distal ends of the handles **134**, **144** to enable a user to more easily grip the handle. In particular, a rubber grip may be disposed in relation to the distal end **138** of the handle **134**, **144** and positioned so that a user may grasp the gripping member of the handle **134**, **144** when exercising.

Preferably, a first handle **134** includes a pivot end **136**, a distal end **138** and an intermediate portion disposed therebetween. As best shown in FIG. **1**, the pivot end **136** of the first handle **134** may be pivotally connected to the first side **126** of the crossbar **130** by means of a pivotal connection **140**. In current design, the pivotal connection **140** comprises a conventional through-bore and a pivot pin **142** operably disposed therein, whereby providing a pivoting means for the handle **134** to pivot in relation thereto. Similarly, a second handle **144** may be pivotally connected to the second side **128** of the crossbar **130**.

In functional operation, the handles **134** and **144** are preferably positioned such that a user may grasp approxi-

mate the distal end **138** of the handles **134**, **144** while exercising and, accordingly, pivot the handles back and forth in correspondence to the user's stride, whereby potentially invoking an aerobic workout. In an alternative embodiment, the handles **134**, **144** may be provided with some conventional form of resistance to further facilitate the exercising of the upper body of a user.

Although the first **134** and second handles **144** are described herein as being connected to the opposing sides **126**, **128** of the crossbar **130** by a pivotal connection **140**, it will be readily appreciated by those skilled in the art that other points of connection are possible. For example, the first and second handles **134**, **144** may be pivotally connected to the first and second sides **20**, **22**, respectively, of the support frame **12**. Alternatively, the handles **134**, **144** may be operably connected to the motor **84** to provide a means for encouraging a user to maintain a predetermined, constant stride on the rotating belt **16**, while maintaining a constant back-and-forth arm movement.

From the above discussion, it will be appreciated that the present invention provides a novel curved deck treadmill which provides a structurally supported arcuate shaped movable surface on which a user may exercise. The present invention further provides a curved deck treadmill which maximizes the upper surface area of the belt by effective disposition of the driving means. In addition, the present invention substantially prevents a user from falling off the back of the treadmill and whereby serves to keep the user centered on the upper surface of the rotating belt without encumbering the natural body motion of the user exercising thereon.

Unlike the prior art, the curved deck treadmill of the present invention comprises a first end and a second end disposed substantially parallel in dimensional relationship and including a deck having an intermediate portion disposed therebetween comprising a substantially arcuate longitudinal configuration which is disposed lower in dimensional relation to the first and second ends. Similarly, the novel configuration of the present invention is capable of reducing the physical impact to the joints and muscles (e.g., the knees and back) of a user, thus providing an operative device having rehabilitative functionality. Moreover, the present invention provides a continuous, smooth exercising motion capable of providing meaningful exercise comfort, thereby facilitating an upper surface which supportably provides for a longer stride with more flexibility. These objectives may be achieved by forming the deck with a curvature corresponding to a radius of about 3 to 20 feet and ideally about 4 to 10 feet. With a radius of this range, in a deck of a length of 4 feet, the intermediate portion of the deck would be about 0.75 to 0.1 feet below the first and second ends of the deck.

FIG. **6** illustrates another preferred embodiment of the present invention wherein those components that are the same as or similar to those employed in the embodiment of the present invention shown in FIGS. **1–5** are designated with the same part numbers. In the embodiment of the present invention shown in FIG. **6**, the endless belt **16** is driven at the rear of treadmill **200** rather than at the front. An idler roller **202** is rotatably mounted at the first or front end **58** of the deck **56** in a manner similar to the mounting of rear roller **86** shown in FIGS. **2** and **3**. As such, the front end portion of belt **16** is trained about front idler roller **202**.

A relatively large diameter drive drum **204** is rotatably mounted adjacent the second end **60** of deck **56** between the first and second opposing sides **20** and **22** of the support frame **12**. The drive drum **204** may be mounted on the frame by a number of well-known means. The drive drum **204** is driven by an electric motor **206** which powers a belt **208** through a drive pulley **210**. A somewhat larger diameter driven pulley **212** is coupled to one end of drive drum **204** for rotation of the drive drum.

As will be appreciated, ideally the diameter of drive drum **204** (preferably from about 4 inches in diameter to 8 inches diameter) is much larger than the diameter of the drive roller **78** used in the embodiment of the present invention (FIGS. **1–5**). This enables the belt **16** to be driven with less tension on the belt, thus reducing the tendency of the belt to "straighten in" between the drive drum **202** and the idler roller **200**, and thereby conforming better to the curvature of the deck **56**. Moreover, by locating the drive drum **204** at the rear of the treadmill **200**, less "loading" is required between the belt **16** and the drive drum than if the drive drum were located at the front of the treadmill. The reason for this is because the belt **16** travels rearwardly (from the front end **58** to the rear end **60**) along the deck **56**, the drive drum **204** drives directly the section of the belt **16** that rides along deck **56**, rather than driving the belt at the opposite end of the deck **56** after the belt has traveled back to the front of the deck in its lower return run around take-up pulley roller **88**.

A further embodiment of the present invention is illustrated in FIG. **7** wherein the belt **16** of the treadmill **300** is also driven at the rearward end **60** of the deck **56**. The rearward end of the belt **16** is received between upper and lower pinch rollers **302** and **304** that are rotatably mounted on the support frame **12** to extend between the first and second sides **20** and **22** of the support frame. As shown in FIG. **7**, the lower pinch roller **304** is loaded upwardly against the upper pinch roller **302** by springs **305** to impart a compression load on the portion of the endless belt **16** extending therebetween. Also as illustrated in FIG. **7**, the lower pinch roller **304** is driven by an electric motor **306** acting through a drive belt **308**. The motor **306** powers a drive pulley **310** which in turn powers a driven pulley **312** through the belt **308**. The driven pulley is ideally attached to one end portion of the lower pinch roller **304** in a well-known manner.

The drive system shown in FIG. **7** does have the advantage of being located contiguous the second end **60** at the deck **56** so as to "directly" drive the belt **16**, as described above with respect to the embodiment of the present invention shown in FIG. **6**. Moreover, the compression load between the pinch rollers **302** and **304** is used to "grip" the endless belt **16** rather than having to rely on the friction generated between a drive roller (pinch roller **302**) and the belt **16** wrapped partially therearound. It is thus possible to power the belt **16** with less tension imparted to the belt, and in particular the portion of the belt riding over the top of deck **56**. As such, the endless belt **16** better conforms to the curvature of the deck **56** than typically might be possible in the embodiment of the present invention shown in FIGS. **1–5**.

Rather than being located at the rear end **60** of the deck **56**, the pinch rollers could be positioned elsewhere relative to the deck. For example, the pinch rollers could be located beneath an intermediate portion of the deck, for instance at the location of third roller **88**, in which case an idle roller such as roller **86**, may be used at the near end **60** of the deck. Alternatively, the pinch rollers may be located at the front of the deck.

FIGS. **8–13** illustrate alternative preferred structures for retaining the belt **16** in a curvilinear configuration substan-

tially flush with the upper surface **66** of the deck **56**. In these figures, those components that are the same as, or similar to, corresponding components shown in FIGS. **1–7** are identified with the same part number.

Referring initially to FIG. **8**, a belt securing assembly **402** is integrated into the structure of cover member **404** which corresponds to cover member **168** shown in FIGS. **1** and **5**. A tubular retaining member **406**, of generally square or rectangular cross-section, is integrated into the construction of cover **404** so as to be located over the marginal edge portion of belt **16**. Ideally, a low friction slide surface **408** is mounted on the underside of, or integrated into the construction of, the bottom wall **410** of the retaining member **406**. Such low friction material might include, for example, Teflon™, graphite, polished stainless steel, material from which the deck **56** is constructed (phenolic impregnated wood), nylon or a form of plastic or other low friction, but durable material that is commercially available. The slide surface **408** is spaced just slightly above the top surface **66** of the deck **56** so as to receive the belt **16** closely between the upper surface **66** and the slide surface **408**. In this manner, the endless belt **16** slides freely between the deck **56** and the retaining member **406** while closely assuming the longitudinal contour of the deck **56**.

Next, referring to FIGS. **9**A and **9**B, a further belt securing assembly **502** is illustrated, which also is integrated into the construction of cover member **504**, which cover member corresponds to cover members **404** and **168** described above. The belt securing assembly **502** includes a downwardly-extending channel **506** formed by vertical legs **508** and **510** extending downwardly from the top horizontal wall **512** of the cover member **504** in spaced parallel relationship to each other. The channel **506** is sized to closely receive a retaining member **514** therein, which retaining member is ideally formed in a generally sinusoidal shape, as shown in FIG. **9**B. Preferably, the retaining member is constructed from a durable, resilient material, such as a spring steel or a durable plastic. Also ideally, the nominal amplitude of the wave form of the retaining member is slightly greater than the distance **518** between the underside of cover horizontal wall **512** (within the channel **506**) and the top surface of the endless belt **16** so as to impose a downward load on the belt at the spaced-apart locations **520** that the retaining member **514** contacts the belt. Also, the surfaces of the contact locations of retaining member **514** may be coated with a low friction material so as to minimize sliding resistance between the contact locations **520** and the belt or a lubricant could be incorporated into the retaining member itself. Such low friction material might include Teflon™, graphite, polished stainless steel, deck material, nylon, a form of plastic or other lowfriction, but durable coating that is commercially available.

FIGS. **10**A and **10**B disclose a belt securing assembly **602** which is also incorporated into the construction of the cover member **604** in the manner of belt securing assemblies **94**, **402** and **502**, discussed above. Belt securing assembly **602** includes a downwardly-open channel **606** defined by walls **608** and **610** extending downwardly in laterally spaced apart relationship from cover top wall **612**. A generally channel-shaped retaining member **614** is sized to slidably engage within channel **606**. The retaining member **614** includes a lower or bottom wall **616**, which ideally is substantially parallel to the longitudinally curved top surface **66** of deck **56**. Ideally, the bottom wall **616** includes a low friction face **618** which bears against the upper surface of belt **16** through the urging of a tubular, elastomeric spring **620** extending along the retaining member **614** and held captive within channel **606**. The elastomeric spring **620** can be composed of rubber, synthetic rubber, a plastic compound or other suitable material. As in the embodiments of the present invention discussed above, the low friction face **618** may be composed of suitable materials such as Teflon™, graphite, polished stainless steel, deck material, nylon, plastic and other commercially available materials. Also, the low friction face may be incorporated into the composition of the bottom wall **616** of a separate member or layer that is attached to the bottom wall.

As illustrated in FIGS. **10**A and **10**B, the sidewalls **622** of retaining member **614** are notched, such as at **624**, to enable the retaining member to flex in an upwardly concave manner, thereby to closely assume the longitudinal curvature of the deck **56** while guiding the retaining member **614** for relative movement within channel **606** towards and away from the deck **56** with the flexure of the deck during use.

It is to be understood that other well-known means may be used to load the retaining member **614** downwardly against the belt **16** in lieu of spring **620** without departing from the spirit or scope of the present invention. Moreover, the sidewalls **622** of the retaining member **614** may be formed in other shapes or configurations and still allow the retaining member to be flexible enough to accommodate changes in curvature of the deck **56** during use.

FIGS. **11** and **12** illustrate a further belt securing assembly **702** which is mounted on the deck **56** rather than incorporated into the structure of cover member **704** in the manner of the belt securing assemblies **94**, **402**, **502** and **602**. The belt securing assembly **702** includes a roller **706** rotatably mounted on a shaft **708** of a crank arm **710**. The other end of the crank arm (defined by shaft **711**) is pivotally mounted within a mounting block **712** secured to the side margin of deck **56** by hardware members **714** or other convenient means. A torsion spring **715** is interposed between mounting block **712** and the crank arm **710**, thereby to load the roller **716** downwardly against the upper surface of endless belt **16**. As shown in FIG. **11**, the belt securing assembly **702** is located beneath the cover member **704** and between spaced-apart walls **718** and **720** which extend downwardly from the cover top wall **722** thereby to afford protection for a belt securing assembly **702**.

A plurality of belt securing assemblies **702** may be located along the side margins of the deck **56**, with the number and spacing of the belt securing assemblies selectable as required. An advantage of the belt securing assembly **702** is that changes in the longitudinal curvature of the deck **56** (for instance during use) are automatically compensated for by the belt securing assemblies. Moreover, the downward pressure imposed on the side margins of the endless belt **16** may be altered by changing the characteristics of spring **715**.

A further preferred embodiment of the present invention is shown in FIG. **13**, which illustrates a belt securing assembly **802** also mounted along the side margins of deck **56** in a manner similar to the belt securing assembly **702**. As with belt securing assembly **702**, the belt securing assembly **802** is located beneath cover member **804**, which cover member affords protection for the belt securing assembly. The belt securing assembly **802** includes a pressure pad **806**, which ideally is generally rectangular or square in shape with the lower perimeter **808** radiused or beveled so as not to present sharp comers or edges to endless belt **16**. A curved, resilient arm **810** extends from generally the top, center portion of the pressure pad **806** to a mounting lug or base **812** which is secured to the side margin of the deck **56** by appropriate fasteners **814**, which may be screws, bolts or

other types of hardware members. Ideally, the arm **810** is formed from a resilient, but high strength, material so as to cause the pressure pad **806** to impose a desired downward load on the side margins of endless belt **16**. One or more shims **818** may be placed beneath base **812** so as to adjust the downward load imposed on pressure pad **806** by arm **810**.

It will be appreciated that the pressure pad **806** may be formed in shapes other than square or rectangular, such as oval or round. Also a plurality of belt securing assemblies **802** may be positioned along the lengths of the side margins of deck **56** as required to satisfactorily retain the endless belt **16** in a curvilinear configuration corresponding to the curvature of the upper surface **66** of the deck **56**.

The present invention may be embodied in other specific forms without departing from its spirit or essential characteristics. The described embodiments are to be considered in all respects only as illustrative, and not restrictive. The scope of the invention is, therefore, indicated by the appended claims, rather than by the foregoing description. All changes which come within the meaning and range of equivalency of the claims are to be embraced within their scope.

While the preferred embodiment of the invention has been illustrated and described, it will be appreciated that various changes can be made therein without departing from the spirit and scope of the invention.

The embodiments of the invention in which an exclusive property or privilege is claimed are defined as follows:

1. An exercise treadmill, comprising:

a. a longitudinally extending support frame;

b. a longitudinally extending deck supported by the support frame, said deck being upwardly concave in the direction along the length of the support frame;

c. an endless belt positioned to slide over the top of the deck while being supported by the deck; and

d. at least one belt retention assembly to retain the belt substantially flush with the deck.

2. An exercise treadmill as defined in claim **1**, wherein the retention assembly is carried by the support frame.

3. An exercise treadmill as defined in claim **2**, wherein the retention assembly comprises a plurality of rollers spaced apart from each other along the support frame, said rollers being positioned over the side margins of the endless belt.

4. An exercise treadmill as defined in claim **3**, wherein the rollers are carried on support shafts cantilevered over the side margins of the belt.

5. An exercise treadmill as defined in claim **3**, wherein the rollers are resiliently loaded against the belt.

6. An exercise treadmill as defined in claim **2**, wherein the retention assembly extends longitudinally along the frame to present a slide surface to the top, side margins of the belt.

7. An exercise treadmill as defined in claim **6**, wherein the slide surface comprises an antifriction composition.

8. An exercise treadmill as defined in claim **7**, wherein the antifriction material is selected from the group consisting of Teflon™, graphite, nylon, plastic, stainless steel and phenolic impregnated wood.

9. An exercise treadmill as defined in claim **6**, wherein the retention assembly loads the slide surface against the top margin of the belt.

10. An exercise treadmill as defined in claim **9**, wherein the slide surface is spring loaded against the top margin of the belt.

11. An exercise treadmill as defined in claim **9**, wherein the retention assembly resiliently loads the slide surface against the top margin of the belt.

12. An exercise treadmill as defined in claim **1**, wherein the retention assembly is carried by the deck.

13. An exercise treadmill as defined in claim **12**, wherein the retention assembly includes a plurality of rollers spaced apart along the side margins of the deck to position the rollers over the side margins of the belt.

14. An exercise treadmill as defined in claim **1**, further comprising a cover structure extending along the side margins of the deck at an elevation above the deck, and the belt retention assembly is carried by the cover structure.

15. An exercise treadmill as defined in claim **14**, wherein the retention assembly is located between the cover structure and the endless belt.

16. An exercise treadmill as defined in claim **14**, wherein the retention assembly comprises a plurality of rollers spaced apart from each other along the cover structure and positioned over the side margins of the endless belt.

17. An exercise treadmill as defined in claim **1**, further comprising a power drive system to move the endless belt over the deck.

18. An exercise treadmill as defined in claim **17**:

a. wherein the support frame has a forward and rearward end portion; and

b. wherein the drive system comprises a drive roller at one of the forward and rearward end portions of the support frame, the endless belt being trained over the drive roller, and a power supply to rotate the drive roller and thereby move the belt over the deck.

19. An exercise treadmill as defined in claim **17**, wherein the power drive system comprising:

a pair of rollers disposed transversely to the length of the endless belt and positioned in close, spaced parallel relationship to each other to receive the endless belt between the roller pair whereupon the roller pair applies a compression load to the belt; and

a power supply to drive one or both of the rollers to move the belt as the pair of rollers rotate.

20. An exercise treadmill as defined in claim **19**, wherein the support frame has a forward end portion and a rearward end portion, the pair of rollers located adjacent either the forward or rearward end portion of the support frame, with the endless belt trained over one of the rollers of the pair of rollers.

21. An exercise treadmill, comprising:

a longitudinal frame assembly;

a deck supported by the frame assembly, the deck comprising a first end portion, a second end portion and an intermediate portion, the deck intermediate portion having a substantially arcuate longitudinal configuration curving downwardly between the first and second end portions of the deck to an elevation substantially below the first and second end portions of the deck;

an endless belt having an upper run sliding over and supported by the deck to present a moving, upwardly concave surface; and

a belt retaining system for retaining the endless belt substantially flush with the deck.

22. An exercise treadmill as defined in claim **21**, wherein the retention system is carried by the frame assembly.

23. An exercise treadmill as defined in claim **22**, wherein the retention system comprises a plurality of rollers spaced apart from each other along the frame, the rollers being positioned over the side margins of the endless belt.

24. An exercise treadmill as defined in claim **23**, wherein the rollers are carried on support shafts cantilevered over the side margins of the endless belt.

25. An exercise treadmill as defined in claim **23**, wherein the rollers are resiliently loaded against the endless belt.

26. An exercise treadmill as defined in claim **22**, wherein the retention system extends longitudinally along the frame to present a slide surface to the top, side margins of the endless belt.

27. An exercise treadmill as defined in claim **26**, wherein the slide surface comprises an low friction composition.

28. An exercise treadmill as defined in claim **27**, wherein the low friction material is selected from the group consisting of Teflon™, graphite, stainless steel, phenolic impregnated wood, nylon and plastic.

29. An exercise treadmill as defined in claim **26**, wherein the retention system loads the slide surface against the top margin of the endless belt.

30. An exercise treadmill as defined in claim **21**, wherein the retention system is carried by the deck.

31. An exercise treadmill as defined in claim **30**, wherein the retention system includes a plurality of rollers spaced apart along the side margins of the deck to position the rollers over the side margins of the endless belt.

32. An exercise treadmill as defined in claim **21**, further comprising a cover structure extending along the side margins of the deck at an elevation above the deck, and the belt retention system is carried by the cover structure.

33. An exercise treadmill as defined in claim **32**, wherein the belt retention system is located between the cover structure and the endless belt.

34. An exercise treadmill according to claim **32**, wherein the retention assembly comprises a plurality of rollers spaced apart from each other along the cover structure and positioned over the side margins of the endless belt.

35. An exercise treadmill according to claim **21**, further comprising a power drive system to move the endless belt over the deck.

36. An exercise treadmill as defined in claim **35**:

a. wherein the frame assembly has a forward end portion and rearward end portion; and

b. wherein the drive system comprises a drive roller at one of the forward and rearward end portions of the frame assembly, the endless belt being trained over the drive roller, and a power supply to rotate the drive roller and thereby move the endless belt over the curved deck.

37. An exercise treadmill according to claim **35**, wherein the power drive system comprising:

a pair of rollers disposed transversely to the length of the endless belt and positioned in close, spaced parallel relationship to each other to receive the endless belt between the roller pair whereupon the roller pair applies a compression load to the belt; and

a power supply to drive one or both of the rollers to move the belt as the pair of rollers rotate.

38. An exercise treadmill according to claim **37**, wherein the frame assembly has a forward end portion and a rearward end portion, the pair of rollers located adjacent either the forward or rearward end portion of the frame assembly, with the endless belt trained over one of the rollers of the pair of rollers.

* * * * *

UNITED STATES PATENT AND TRADEMARK OFFICE

CERTIFICATE OF CORRECTION

PATENT NO. : 5,897,461

DATED : April 27, 1999

INVENTOR(S) : J.D. Socwell

It is certified that error appears in the above-identified patent and that said Letters Patent is hereby corrected as shown below:

COLUMN	LINE	
[56] Pg. 1, col. 2	Refs. Cited (Other Publs.)	Before "Copy of . . ." delete "Document Information"
[56] Pg. 1, col. 2	Refs. Cited (Other Publs.)	After "3,642,279" and before "." delete "(U10-above)"
4	66	"FIGS. 11" should read --FIG. 11--
12	2-3	"ther-ebetween" should read --therebetween--
12	56-57	"ther-ebetween." should read --therebetween.--
15	51	"lowfriction," should read --low-friction,--
16	63	"comers" should read --corners--

UNITED STATES PATENT AND TRADEMARK OFFICE

CERTIFICATE OF CORRECTION

PATENT NO. : 5,897,461

DATED : April 27, 1999

INVENTOR(S) : J.D. Socwell

It is certified that error appears in the above-identified patent and that said Letters Patent is hereby corrected as shown below:

COLUMN	LINE	
19 (Claim 27, line 2)	8	"an low" should read --a low--

Signed and Sealed this

Fifth Day of October, 1999

Attest:

Q. TODD DICKINSON

Attesting Officer

Acting Commissioner of Patents and Trademarks