UNITED STATES DISTRICT COURT
SOUTHERN DISTRICT OF CALIFORNIA

WOODWAY USA, INC., Plaintiff, v. LIFECORE FITNESS INC. d/b/a Assault Fitness, Defendant.	Case No.: 22-cv-00492-JO-BLM **CLAIM CONSTRUCTION ORDER**

Plaintiff Woodway USA, Inc. ("Woodway") filed a patent infringement suit against Defendant LifeCORE Fitness, Inc. ("LifeCore") alleging that Defendant's treadmill products infringed its patents. Plaintiff and Defendant requested that the Court construe certain claim terms in the patents at issue. Dkts. 42, 43, 44. After considering the parties' briefing and the arguments presented during oral argument, the Court issues the following claim construction order.

I. BACKGROUND

A. Factual Background

Plaintiff Woodway, a manufacturer of treadmills and other fitness, health, and rehabilitation equipment, is the owner of four patents for a manual, non-motorized treadmill. Plaintiff alleges that its CURVE® manual treadmills contain the technology protected by these four patents: (1) U.S. Patent No. 9,039,580 ("the '580 Patent"); (2) U.S. Patent No. 10,561,884 ("the '884 Patent"); (3) U.S. Patent No. 10,799,745 ("the '745 Patent"); and (4) U.S. Patent No. 11,465,005 ("the '005 Patent"). Dkt. 34 (First Amended Complaint, "FAC") ¶ 10.

Plaintiff accuses Defendant LifeCore, also a manufacturer of manual treadmills, of infringing the four patents at issue in this case (the "asserted patents"). Plaintiff alleges that Defendant's manual treadmills not only compete with Plaintiff's CURVE® treadmills in the marketplace, but also infringe the patents upon which its CURVE treadmills were built. Specifically, Plaintiff alleges that Defendant's AirRunner, AssaultRunner Elite, AssaultRunner Pro, and AssaultRunner treadmills infringe its four patents as follows: (1) claims 1-3, 5-6, 10, and 25 of the '580 Patent; (2) claims 30-34, 37-54, 57, and 59 of the '884 Patent; (3) claims 1, 4, 7-12, 14, 17, 18, and 20-26 of the '745 Patent; and (4) claims 1-4, 6-13, and 15-16 of the '005 Patent. *See* Dkt. 46 ("Pl.'s Opening CC Br.") at 2; FAC ¶¶ 13-14, 21-22, 29-30, 37-38.

B. The Asserted Patents

The four patents at issue in this case contain inventions related to manual treadmills and share substantially similar specifications. '580 Patent at [54]; '884 Patent at [54]; '745 Patent at [54]; '005 Patent at [54]. While drawn from the specification of the '580 Patent, below is a description of the manual treadmill featured in all four of the patents at issue:

> Similar to a treadmill powered by a motor, a manual treadmill . . . incorporate[s] some system or means to absorb or counteract the forward velocity generated by a user so that the user may generally maintain a substantially static position on the running surface of the treadmill. The

> counteracting force driving the belt of a manual treadmill is desirably sufficient to move the belt at substantially the same speed as the user so that the user stays in roughly the same static position on the running surface. Unlike motor-driven treadmills, however, this force is not generated by a motor.

Id. at col. 1 l. 61-col. 2 l. 3. All four patents feature a "manual powered treadmill," including a "frame" with a front end and a rear end; a "running belt" where at least a portion of the "running surface" is "curved;" and a "safety device" that permits the running belt to "freely rotate" in one direction while "substantially prevent[ing]" rotation in the other direction. '884 Patent col. 30 l. 51-col. 36 l. 8; *see* '580 Patent col. 32 ll. 48-67; '745 Patent col. 32 l. 60-col. 33 l. 20; '005 Patent col. 32 l. 60-col. 33 l. 16.

An "exemplary embodiment" of the manual-powered treadmills covered by Plaintiff's four patents is depicted below:

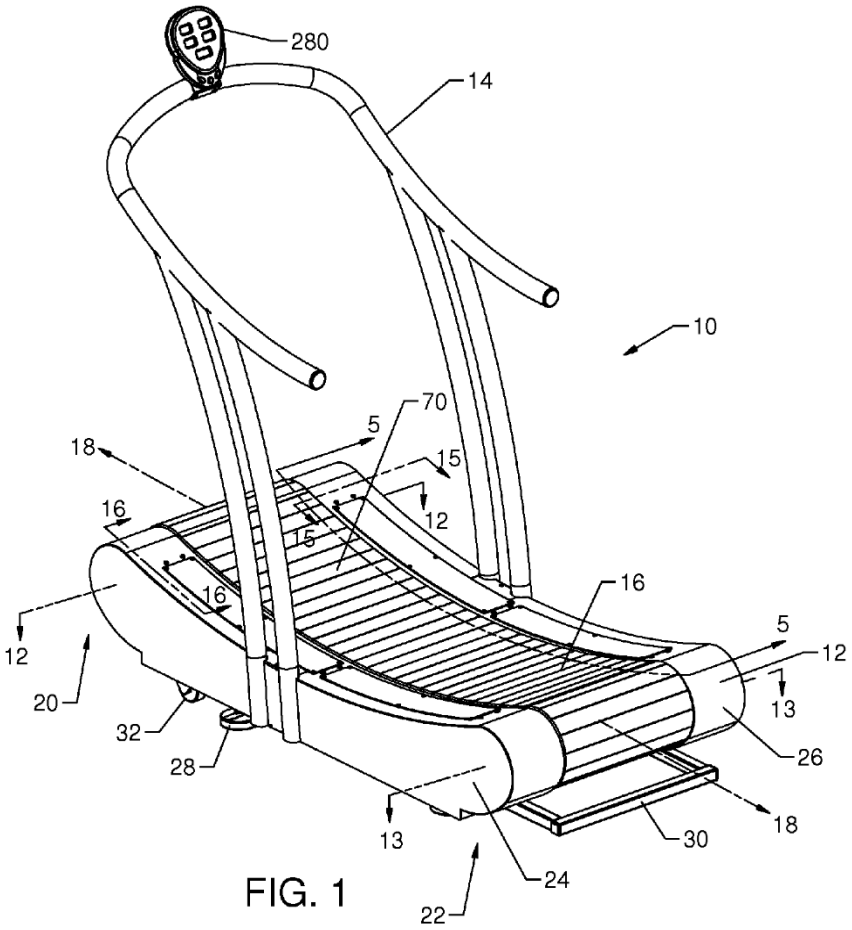

FIG. 1

’580 Patent fig. 1.

The following sets forth the independent claims from each of the four patents that Plaintiff claims Defendant infringes:

<u>Independent Claim 1 of the ’580 Patent</u>

A manually powered treadmill comprising:

a frame having a front end and a rear end positioned opposite the front end;

a front shaft rotatably coupled to the frame at the front end;

a rear shaft rotatably coupled to the frame at the rear end;

a first bearing rail having a plurality of bearings, the first bearing rail attached to a left side of the frame;

a second bearing rail having a plurality of bearings, the second bearing rail attached to a right side of the frame;

a running belt supported by the first bearing rail and the second bearing rail and disposed about the front shaft and the rear shaft, wherein the running belt follows a curved running surface; and

a safety device coupled to at least one of the front shaft and the rear shaft, wherein the safety device is structured to substantially prevent rotation of at least one of the front shaft and the rear shaft in a first rotational direction while permitting rotation of the at least one of the front shaft and the rear shaft in a second rotational direction opposite the first rotational direction.

'580 Patent col. 32 ll. 48-67.

Independent Claim 30 of the '884 Patent

A manually powered treadmill, comprising:

a frame having a front end and a rear end positioned opposite the front end;

a front shaft coupled to the frame proximate the front end;

a rear shaft coupled to the frame proximate the rear end;

a plurality of bearings coupled to the frame;

a running belt at least partially supported by the plurality of bearings, wherein the running belt comprises a curved running surface; and

a safety device coupled to the frame and the running belt, the safety device having a first rotatable element and a second rotatable element, wherein at least one of the first and second rotatable elements are adapted for rotation relative to the frame;

wherein the running belt and one of the first and second rotatable elements of the safety device freely rotate in a first direction of rotation relative to the other of the first and second rotatable elements of the safety device, but interference between the safety device and at least one of the first and second rotatable elements substantially prevents rotation in a second direction of rotation, opposite the first direction of rotation, of the running belt and the one

of the first and second rotatable elements relative to the other of the one of the first and second rotatable elements.

'884 Patent col. 35 l. 30-col. 36 l. 8.

Independent Claim 1 of the '745 Patent

1. A treadmill, comprising:

a frame;

a front running belt pulley coupled to the frame;

a rear running belt pulley coupled to the frame and spaced a distance from the front running belt pulley;

a plurality of bearings coupled to the frame;

a running belt at least partially supported by at least one of the front running belt pulley and the rear running belt pulley, wherein the running belt includes a running surface, at least a portion of which is curved;

a support element coupled to the frame; and

a safety device coupled to the running belt, the safety device at least partially supported by the support element, wherein the safety device includes a first safety race element and a second safety race element, wherein at least one of the first and second safety race elements is adapted for rotation relative to the frame, and wherein one of the first and second safety race elements substantially surrounds the other of the one of the first and second safety race elements;

wherein one of the first and second safety race elements and the running belt freely rotates in a first direction of rotation relative to the frame, however, in a second direction of rotation, opposite the first direction of rotation, the one of the first and second safety race elements is substantially prevented from rotation relative to the frame to substantially prevent rotation of the running belt relative to the frame.

'745 Patent col. 32 l. 60-col. 33 l. 20.

Independent Claim 1 of the ’005 Patent

1. A manually powered treadmill, comprising:

a frame;

at least one front running belt pulley coupled to the frame;

at least one rear running belt pulley coupled to the frame and spaced a distance from the at least one front running belt pulley;

a running belt at least partially supported by at least one of the at least one front running belt pulley and the at least one rear running belt pulley, wherein the running belt includes a running surface, at least a portion of which is curved;

a safety device coupled to the frame and the running belt, the safety device having a first element and a second element, the first element substantially surrounding the second element or the second element substantially surrounding the first element;

wherein one of the first and second elements of the safety device and the running belt freely rotate in a first direction of rotation relative to the frame, however, in a second direction of rotation, opposite the first direction of rotation, the one of the first and second elements is substantially prevented from rotation relative to the frame to substantially prevent or resist rotation of the running belt relative to the frame.

’005 Patent col. 32 l. 60 to col. 33 l. 16.

C. Procedural History

Plaintiff filed its initial complaint on April 11, 2022, alleging that Defendant’s manual treadmills infringe the ’580 Patent, the ’884 Patent, and the ’745 Patent. Dkt. 1 (“Compl.”). On October 24, 2022, Plaintiff filed a First Amended Complaint to add the allegation that Defendant’s treadmills also infringe the ’005 Patent. FAC. The parties now request that the Court construe the meaning of various claims terms in these four patents. In their claim construction briefing, the parties agreed on the proper construction for two

claim terms[1] and requested that the Court construe the following six disputed claim terms: (1) "substantially prevent;" (2) "safety device;" (3) "shaft;" (4) "element;" (5) "race element;" and (6) "interference between the safety device and at least one of the first and second rotatable elements." *See* Dkts. 42, 43, 44, 45, 46, 47, 48.

II. LEGAL STANDARD

"It is a 'bedrock principle' of patent law that the claims of a patent 'define the invention to which the patentee is entitled the right to exclude.'" *Phillips v. AWH Corp.*, 415 F.3d 1303, 1312 (Fed. Cir. 2005) (en banc) (citation omitted). "The purpose of claim construction is to 'determin[e] the meaning and scope of the patent claims'" that one party accuses the other of infringing. *O2 Micro Int'l Ltd. v. Beyond Innovation Tech. Co.*, 521 F.3d 1351, 1360 (Fed. Cir. 2008) (citation omitted).

Courts should give claim terms "their ordinary and customary meaning"—i.e., "the meaning that the term would have to a person of ordinary skill in the art in question at the time of the invention." *Phillips*, 415 F.3d at 1312–13. "In some cases, the ordinary meaning of claim language as understood by a person of ordinary skill in the art may be readily apparent even to lay judges, and claim construction in such cases involves little more than the application of the widely accepted meaning of commonly understood words." *Id.* at 1314. "However, in many cases, the meaning of a claim term as understood by persons of skill in the art is not readily apparent." *O2 Micro*, 521 F.3d at 1360. In such cases, the court must look to sources like "'the words of the claims themselves, the remainder of the specification, the prosecution history, and extrinsic evidence.'" *Phillips*, 415 F.3d at 1314 (quoting *Innova/Pure Water, Inc. v. Safari Water Filtration Sys., Inc.*,

[1] The parties agree that the claim term "bearing rail[]" should be construed as "a rail with bearings." Dkt. 44, ("Jt. CC Worksheet") at 2. In addition, the parties agree that the claim term "coupled" should be construed as "the joining of two members directly or indirectly to one another." Jt. CC Worksheet at 3. The Court finds that the parties' joint proposed constructions are well supported by the language of the claim and the specifications.

381 F.3d 1111, 1116 (Fed. Cir. 2004)); *see Ericsson, Inc. v. D-Link Sys., Inc.*, 773 F.3d 1201, 1217–18 (Fed. Cir. 2014).

In determining the ordinary and customary meaning of a claim, a court should first look to the language of the claims. *See Allergan Sales, LLC v. Sandoz, Inc.*, 935 F.3d 1370, 1373 (Fed. Cir. 2019) ("[C]laim construction must begin with the words of the claims themselves.") (citation omitted); *Source Vagabond Sys. Ltd. v. Hydrapak, Inc.*, 753 F.3d 1291, 1299 (Fed. Cir. 2014) ("[A] claim construction analysis must begin and remain centered on the claim language itself.") (citation omitted). A court must also read claims "in view of the specification, of which they are a part." *Markman v. Westview Instruments, Inc.*, 52 F.3d 967, 979 (Fed. Cir. 1995); *see* 35 U.S.C. § 112(b) ("The specification shall conclude with one or more claims particularly pointing out and distinctly claiming the subject matter which the inventor or a joint inventor regards as the invention."). "'Apart from the claim language itself, the specification is the single best guide to the meaning of a claim term.'" *Vederi, LLC v. Google, Inc.*, 744 F.3d 1376, 1382 (Fed. Cir. 2014) (quoting *AIA Eng'g Ltd. v. Magotteaux Int'l S/A*, 657 F.3d 1264, 1272 (Fed. Cir. 2011)).

In addition to the claim language and the specification, courts may consider the patent's prosecution history if it is in evidence. *Phillips*, 415 F.3d at 1317. The prosecution history "consists of the complete record of the proceedings before the [Patent and Trademark Office ('PTO')] and includes the prior art cited during the examination of the patent." *Id.* "Like the specification, the prosecution history provides evidence of how the PTO and the inventor understood the patent." *Id.* A court should also consult the prosecution history "so that the court can exclude any interpretation that was disclaimed during prosecution." *Sorensen v. Int'l Trade Comm'n*, 427 F.3d 1375, 1378 (Fed. Cir. 2005) (citing *Phillips*, 415 F.3d at 1317).

While analysis of the above intrinsic evidence will resolve claim construction disputes in most situations, courts may resort to extrinsic evidence when necessary. *See Vitronics Corp. v. Conceptronic, Inc.*, 90 F.3d 1576, 1583 (Fed. Cir. 1996); *Teva Pharms. USA, Inc. v. Sandoz, Inc.*, 574 U.S. 318, 331 (2015); *see also Seabed Geosolutions (US)*

Inc. v. Magseis FF LLC, 8 F.4th 1285, 1287 (Fed. Cir. 2021) ("If the meaning of a claim term is clear from the intrinsic evidence, there is no reason to resort to extrinsic evidence."). "Where the intrinsic record is ambiguous, and when necessary," district courts may "rely on extrinsic evidence, which 'consists of all evidence external to the patent and prosecution history, including expert and inventor testimony, dictionaries, and learned treatises.'" *Power Integrations, Inc. v. Fairchild Semiconductor Int'l, Inc.*, 711 F.3d 1348, 1360 (Fed. Cir. 2013) (quoting *Phillips*, 415 F.3d at 1317). A court must evaluate all extrinsic evidence in light of the intrinsic evidence. *Phillips*, 415 F.3d at 1319.

III. DISCUSSION

A. Construction of "Substantially Prevents"

The Court starts its claim construction with the phrase "substantially prevents." The four asserted Patents feature a safety device that allows the running belt of the treadmill to move in one direction but "substantially prevent" that movement in the opposite direction. Defendant proposes that the Court construe this claim term as "prevent[s] any movement after allowing no or minimal movement." Jt. CC Worksheet at 1. Plaintiff, on the other hand, proposes the construction "entirely / largely / mostly / generally though not necessarily entirely prevent[s]." *Id.* As seen in their respective proposed constructions, both parties agree that the patents' safety devices limit movement of running belt in a second direction but dispute whether that movement is entirely restricted as opposed to mostly restricted.

The four asserted Patents do not elaborate on the degree to which the safety device impedes rotation of the belt in the second direction. *See* '884 Patent col. 35 l. 60-col. 36 l. 8; '580 Patent col. 32 ll. 61-64; '745 Patent col. 33 ll. 4-20; and '005 Patent col. 33 ll. 4-16. The claim language is, therefore, of little help in resolving the parties' dispute which centers on the degree to which the safety device restricts movement. Because it finds little guidance in the language of the claim, the Court turns next to the prosecution history to determine the proper construction of "substantially prevents."

Defendant argues that Plaintiff, while prosecuting its patents, already disclaimed a definition of "substantially prevents" that allows for some rotation in the second direction; thus, its current proposed construction fails. Def.'s Opening CC Br. at 7–9; Dkt. 47, ("Def.'s Responsive CC Br.") at 6–7. Under the doctrine of prosecution disclaimer, a patent owner cannot claim a meaning that they "clearly and unmistakably" disavowed during the process of prosecuting the patent application. *Genuine Enabling Tech. LLC v. Nintendo Co.*, 29 F.4th 1365, 1374 (Fed. Cir. 2022); *see also Computer Docking Station Corp. v. Dell, Inc.*, 519 F.3d 1366, 1375 (Fed. Cir. 2008) ("Prosecution disclaimer does not apply to an ambiguous disavowal."). When patentees "unequivocally and unambiguously" disavow certain meanings in order to obtain a patent, they are precluded "'from recapturing through claim interpretation specific meanings disclaimed during prosecution.'" *Aylus Networks, Inc. v. Apple Inc.*, 856 F.3d 1353, 1359 (Fed. Cir. 2017) (quoting *Omega Eng'g, Inc, v. Raytek Corp.*, 334 F.3d 1314, 1323 (Fed. Cir. 2003)). This doctrine "ensures that claims are not 'construed one way in order to obtain their allowance and in a different way against accused infringers.'" *Id.* at 1360 (quoting *Southwall Techs., Inc. v. Cardinal IG Co.*, 54 F.3d 1570, 1576 (Fed. Cir. 1995)). "The party seeking to invoke prosecution history disclaimer bears the burden of proving the existence of a clear and unmistakable disclaimer that would have been evident to one skilled in the art." *Genuine Enabling Tech.*, 29 F.4th at 1374 (citation omitted).

Applying the above principles, the Court examines whether Plaintiff[2] made statements during the prosecution history of these patents which contradict the construction

---

[2] While Plaintiff is distinct from the applicants, any potential disclaimer by the applicants during the prosecution history will apply to Plaintiff as the current owner of the asserted patents. *See Aylus*, 856 F.3d at 1359 ("Prosecution disclaimer 'preclud[es] [patent owners] from recapturing through claim interpretation specific meanings disclaimed during prosecution.'" (quoting *Omega*, 334 F.3d at 1323)); *Standard Oil Co. v. Am. Cyanamid Co.*, 774 F.2d 448, 452 (Fed. Cir. 1985) ("[T]he prosecution history (or file wrapper) limits the interpretation of claims so as to exclude any interpretation that may have been disclaimed or disavowed during prosecution in order to obtain claim allowance.").

that it now seeks. Plaintiff initially sought a patent for its inventions using the following claim language:

> a safety device coupled to at least one of the front shaft and the rear shaft, wherein the safety device is structured to **restrict movement of at least one of the running belt, the front shaft, and the rear shaft** in a first rotational direction while permitting movement of the at least one of the running belt, the front shaft, and the rear shaft in a second rotational direction opposite the first rotational direction.

Dkt. 45-4, Def.'s Ex. 3 at p. 29 (emphasis added). As seen in the highlighted language, the original claim language proposed by Plaintiff was unclear on whether the safety device restricts the movement of the running belt in a second direction, as opposed to the movement of other components like the front shaft or rear shaft. By describing the invention as restricting movement of at least one of the above three components, the language left open the possibility that the safety device would not restrict the movement of the running belt at all. On July 19, 2018, the examiner for the PTO rejected this claim because previous inventions already contained a safety device with the same functionality. *See* Bostic, Cutter, and Schonenberger[3] at Dkt. 45-3, Def.'s Ex. 2 at p. 19. The examiner explained that Plaintiff's patent was obvious in light of the following prior art: "Regarding claim 1, Bostic teaches a manually powered treadmill, comprising: . . . a safety device coupled to at least one of the front shaft and the rear shaft, wherein the safety device is structured to restrict movement of at least one of the running belt, the front shaft, and the rear shaft in a first rotational direction." *Id.*

---

[3] A patent claim is obvious under 35 U.S.C. § 103 if "the differences between the subject matter sought to be patented and the prior art are such that the subject matter as a whole would have been obvious at the time the invention was made to a person having ordinary skill in the art to which said subject matter pertains." *TQ Delta, LLC v. CISCO Sys., Inc.*, 942 F.3d 1352, 1357 (Fed. Cir. 2019) (quoting 35 U.S.C. § 103(a)); *accord KSR Int'l Co. v. Teleflex Inc.*, 550 U.S. 398, 406 (2007). "Obviousness can be proven by combining existing prior art references." *Cohesive Techs., Inc. v. Waters Corp.*, 543 F.3d 1351, 1364 (Fed. Cir. 2008).

In response to the examiner's rejection, Plaintiff sought to differentiate its technology from the prior art on the grounds that it only allowed one-directional movement of the running belt. In order to do so, it amended its proposed claim language to clarify that the running belt does not move in two directions:

> a safety device coupled to the running belt and to at least one of the front shaft and the rear shaft, <u>so that a portion of the safety device, the running belt and the at least one of the front shaft and the rear shaft freely rotate when the portion of the safety device rotates in a first direction of rotation relative to the frame, however, in a second direction of rotation, opposite the first direction of rotation, the safety device substantially prevents rotation of the portion of the safety device, the running belt and the at least one of the front shaft and the rear shaft</u> . . . .

Dkt. 45-4, Def.'s Ex. 3 at p. 29 (emphasis in original); *see also id.* at p. 31, 33, 35, 36, 38. In addition to amending the language of the claim, applicants made further statements distinguishing their invention as only allowing for one-way rotation while Bostic allowed rotation of the treadmill belt in both directions. *Id.* at p. 46. During an interview with the examiner, the applicants explained that Bostic was different because "the one-way clutch of Bostic does not provide for rotation in only one direction"—as a result, "[Bostic's] treadmill belt 10 is free to move in both directions." *Id.* at p. 42, 45.

In response to a second rejection on prior art grounds, Plaintiffs made further statements to clarify that its invention only allowed for one way rotation of the running belt. On August 5, 2019, the examiner again rejected the same claim as obvious, this time in light of the prior art references of Bostic, Cutter, Schonenberger, and Savettiere. *See* Dkt. 55-1, Ex. 1 at 2. In explaining the second rejection, the examiner pointed to the Savettiere, another treadmill including a safety device, and asserted that the combination of the prior art found in Bostic and Savetierre taught a mechanism that would render the pending claims obvious. The examiner asserted:

> Savettiere teaches a treadmill including a safety device (360) coupled to a

> frame and running belt such that a portion (364, 370) of the safety device is at least partially supported by housing (362, 368) of the safety device so that the portion of the safety device and the running belt freely rotate when the portion of the safety device rotates in a first direction relative to the frame, however, in a second direction of rotation, opposite the first direction of rotation, interference between the housing and the portion of the safety device substantially prevents rotation of the portion of the safety device and the running belt [0136]. It would have been obvious to one of ordinary skill in the art . . . to modify the device taught by Bostic by providing the safety mechanism taught by Savettiere in order to prevent accidental reverse movement of the [running] belt."

Id. at 3. Again, applicants distinguished their invention on the grounds that the prior art, including Savetierre, identified above allowed for two-way rotation of the treadmill belt. Applicants asserted:

> [T]he one-way clutch device of Savettiere **does not teach enabling or allowing only one rotational direction of movement**. Rather, the one-way clutch device 372 discloses enabling relative movement between the rollers 354 and the belt 270 in one rotational direction and transmitting frictional force from the rollers 354 to the belt 270 in an opposite rotational directional direction. At no point are the rollers 354 **used to *restrict* rotation of the treadmill belt 270 to move in only one rotational direction**.

Dkt. 46-1, Pl.'s Ex. F at p. 220 (italics in original). In other words, while Savetierre contains components that create friction to prevent accidental or unintended reverse movement, it did ultimately allow for *intentional* bi-directional movement of the running belt. In contrast to this prior art, Plaintiffs emphasized that its patents featured a running belt that moved in one rotational direction only. *Id.*

After reviewing the above prosecution history statements, the Court concludes that Plaintiff clearly and unequivocally disclaimed an invention that allowed for bi-directional

movement of its treadmill belt; a disclaimer that is at odds with the broad definition it now proposes. Throughout the prosecution history, the applicants pointed to the bi-directional rotation capabilities of Bostic and Savettiere to argue that its invention was different and not covered by prior art. Thus, Plaintiff cannot now argue that the proper construction of its patent should be broad enough to encompass some degree of bi-directional rotation.[4] *See Computer Docking Station*, 519 F.3d at 1374 ("A patentee could [make a disclaimer], for example, by clearly characterizing the invention in a way to try to overcome rejections based on prior art."); *Traxcell Techs., LLC v. Nokia Sols. & Networks Oy*, 15 F.4th 1136, 1141 (Fed. Cir. 2021). On this ground, the Court rejects Plaintiff's proposed definition of "substantially prevents" as "entirely / largely / mostly / generally though not necessarily entirely prevent[s]" because such a construction would be broad enough for Plaintiff to "recapture through claim interpretation" the bi-directional movement it disavowed during the prosecution history.

While the Court agrees with Defendant that Plaintiff disclaimed the scope of its claims to the extent set forth above, it declines to adopt the precise construction proposed by Defendant, which includes the specific requirement of "preventing any movement after allowing no or minimal movement." The Federal Circuit has explained that "even in the case of an unequivocal disavowal of claim scope, the court must construe the claim 'congruent with the scope of the surrender.'" *Cordis Corp. v. Medtronic Ave, Inc.*, 511 F.3d 1157, 1177 (Fed. Cir. 2008) (quoting *Omega*, 334 F.3d at 1324); *see Traxcell*, 15 F.4th at 1141. The Court finds Defendant's proposed construction—"prevent any

---

[4] Plaintiff argues that further prosecution history, specifically the understanding of the examiner in allowing the patents at issue, demonstrates that no such disclaimer took place. Pl.'s Responsive CC Br. at 6. Plaintiff's argument is not persuasive because it is based on a misapprehension of the prosecution disclaimer doctrine. Whether a patentee disclaimed certain meanings is dependent solely on the applicants' statements in distinguishing its claim, not the examiner's decision-making process in allowing claims. *See Arendi S.A.R.L. v. Google LLC*, 882 F.3d 1132, 1135 (Fed. Cir. 2018) ("'[I]t is the applicant, not the examiner, who must give up or disclaim subject matter that would otherwise fall within the scope of the claims.'" (quoting *Sorensen*, 427 F.3d at 1379)).

movement after allowing no or minimal movement"—oversteps the scope of Plaintiff's disclaimers during the prosecution history. During the prosecution history, applicants distinguished prior art technology on the grounds that it did not "*restrict* rotation of the treadmill belt . . . to move in only one rotational direction." Dkt. 46-1, Pl.'s Ex. F at p. 220 (emphasis in original). In doing so, Plaintiff clearly asserted that its device does restrict rotation of the belt such that the belt essentially moves in only one rotational direction. It did not, however, make any statements or disclaimers about the degree of possible movement in the second rotational direction (the possibility of an initial swing back of the treadmill) before the safety device function locks in to allow for movement in one direction. Defendants' proposed construction that would call for no or minimal movement in the second direction is, therefore, more restrictive than supported by the claim language and the prosecution history. Instead, to better align with both, the Court construes the claim term "substantially prevents" as "restricts rotation to allow for only one rotational direction of movement."[5]

The Court notes that its construction which requires that the running belt move only in one direction is consistent with and supported by the asserted patents' specifications. Specifically, several passages in the specifications are consistent with the notion that the protected inventions restrict movement of the running belt to allow for rotation in only direction. For example, the specification describes a "one-way bearing assembly 1300 [that] is a motion restricting element that is configured to permit rotation of at least one of the front and rear shaft assemblies 44, 46 (and hence the running belt 16) in only one direction . . . ." '580 Patent col. 27 ll. 11-15; *see also id.* at col. 28 ll. 1-5 ("The one-way bearing assembly 1500 is a motion restricting element that is configured to permit rotation

[5] The Court adopts Defendant's proposed construction as modified because it is well supported by the clear and unmistakable disclaimer in the prosecution history and the asserted patents' specifications. Moreover, at the claim construction hearing, Defendant represented that it accepted the Court's modification of its proposed construction. In light of the above, the Court declines to address the additional grounds that Defendant advances for adopting its proposed construction for the claim term "substantially prevents."

of at least one of the front and rear shaft assemblies 44, 46 (and hence the running belt 16) in only one direction . . . ."); *id.* at col. 29 ll. 23-25 ("Other safety devices to help prevent undesirable forward rotation of the running belt 16 . . . .").

B. Disputed Construction: "Safety Device"

The Court now turns to the second disputed term, "safety device," which appears in all four of the patents that Plaintiff accuses Defendant of infringing.

i. *"Safety Device" in the '580 Patent*

Defendant proposes that the Court construe the claim term "safety device" in the '580 Patent as a means-plus-function limitation with corresponding structures disclosed at 27:7-29:28 of the '580 Patent's specification. Jt. CC Worksheet at 2. Plaintiff, on the other hand, proposes the construction "a device that permits movement in substantially only one direction." *Id.* The Court will first consider whether the term "safety device" in the '580 Patent should be construed as a means-plus-function limitation.

An element in a claim that describes a function without describing the physical structures for performing that function is a "means-plus-function" claim element. *See Dyfan, LLC v. Target Corp.*, 28 F.4th 1360, 1365 (Fed. Cir. 2022) (a means-plus-function limitation recites "a function without reciting structure for performing the function"). Section 112 ¶ 6 of the Patent Act provides:

> An element in a claim for a combination may be expressed as a means or step for performing a specified function without the recital of structure, material, or acts in support thereof, and such claim shall be construed to cover the corresponding structure, material, or acts described in the specification and equivalents thereof.

35 U.S.C. § 112 ¶ 6 (pre-America Invents Act); *accord* 35 U.S.C. § 112(f) (current).[6] In enacting this provision, Congress "'struck a balance in allowing patentees to express a claim limitation by reciting a function to be performed rather than by reciting structure for performing that function,' while 'placing specific constraints on how such a limitation is to be construed'—that is, by restricting the 'scope of coverage to only the structure, materials, or acts described in the specification as corresponding to the claimed function and equivalents thereof.'" *Diebold Nixdorf, Inc. v. Int'l Trade Comm'n*, 899 F.3d 1291, 1297 (Fed. Cir. 2018) (quoting *Williamson v. Citrix Online, LLC*, 792 F.3d 1339, 1347 (Fed. Cir. 2015) (en banc)).

"The overall means-plus-function analysis is a two-step process." *Dyfan*, 28 F.4th at 1365. "The first step is to determine whether a claim limitation is drafted in means-plus-function format," which requires a court to "determine whether [the claim] connotes sufficiently definite structure to a person of ordinary skill in the art." *Id.* "If the limitation connotes sufficiently definite structure, it is not drafted in means-plus-function format, and § 112 ¶ 6 does not apply." *Id.* If, however, the court concludes that the limitation describes functions as opposed to physical structure, the court performs the second step of "determining 'what structure, if any, disclosed in the specification corresponds to the claimed function.'" *Id.* (quoting *Williamson*, 792 F.3d at 1351).

"If the limitation uses the word 'means,' there is a rebuttable presumption that § 112 ¶ 6 applies." *Rain Computing, Inc. v. Samsung Elecs. Am., Inc.*, 989 F.3d 1002, 1005 (Fed. Cir. 2021). "Generic terms such as 'mechanism,' 'element,' 'device,' and other nonce words that reflect nothing more than verbal constructs may be used in a claim in a manner

---

[6] Congress amended 35 U.S.C. § 112 when it enacted the Leahy–Smith America Invents Act ("AIA"). *In re Durance*, 891 F.3d 991, 1002 n.9 (Fed. Cir. 2018). "However, the amended version of § 112 applies only to patent applications 'filed on or after' September 16, 2012." *Id.* The parties agree that the pre-AIA version of § 112 applies to the asserted patents. *See* Pl.'s Opening CC Br. at 8 n.4; Def.'s Opening CC Br. at 12 n.5. In addition, the Court notes that the above language in paragraph 6 of the pre-AIA version of § 112 is identical to the language in subsection (f) of the current version of § 112. *See* 35 U.S.C. § 112(f).

that is tantamount to using the word 'means.'" *Williamson*, 792 F.3d at 1350. Like the word "means", the above "nonce" words "'typically do not connote sufficiently definite structure.'" *Id.* (citation omitted). Thus, their use can "presumptively bring the disputed claims limitations within the ambit of § 112 ¶ 6." *Zeroclick, LLC v. Apple Inc.*, 891 F.3d 1003, 1008 (Fed. Cir. 2018); *see also Egenera, Inc. v. Cisco Sys., Inc.*, 972 F.3d 1367, 1373 (Fed. Cir. 2020). The Federal Circuit has cautioned, however, that the use of a nonce word is probative but not dispositive: "[E]ven if the claims recite a nonce term followed by functional language, other language in the claim 'might inform the structural character of the limitation-in-question or otherwise impart structure' to the claim term." *MTD Prod. Inc. v. Iancu*, 933 F.3d 1336, 1341–42 (quoting *Williamson*, 792 F.3d at 1351). "The ultimate question [remains] whether the claim language, read in light of the specification, recites sufficiently definite structure" to a person skilled in the art. *Id.* at 1342 (citation omitted).[7]

Here, the Court concludes that the term "safety device" is a means-plus-function limitation because the claim language describes a function rather than a set of physical structures. The Court begins with the claim language which describes the feature as follows:

> a safety device coupled to at least one of the front shaft and the rear shaft, wherein the safety device is structured to substantially prevent rotation of at least one of the front shaft and the rear shaft in a first rotational direction while

---

[7] In its briefing, Plaintiff relies on the Federal Circuit's decision in *Inventio AG v. ThyssenKrupp Elevator Americas Corp.*, 649 F.3d 1350 (Fed. Cir. 2011). *See* Pl.'s Responsive CC Br. at 11; Pl.'s Opening CC Br. at 10. *Inventio* is no longer good law regarding means-plus-function limitations. In a subsequent decision, the Federal Circuit sitting en banc in *Williamson v. Citrix Online, LLC* expressly overruled the legal standard utilized by the *Inventio* court to evaluate the means-plus-function issues in that case. *Compare Inventio*, 649 F.3d at 1356 ("[T]he presumption flowing from the absence of the term 'means' is a strong one that is not readily overcome.") *with Williamson*, 792 F.3d at 1349 ("[W]e . . . expressly overrule the characterization of that presumption as 'strong.' We also overrule the strict requirement of a showing that the limitation essentially is devoid of anything that can be construed as structure.") (citation omitted).

> permitting rotation of the at least one of the front shaft and the rear shaft in a second rotational direction opposite the first rotational direction.

'580 Patent col. 32 ll. 61-67. The claim term "safety device" contains the generic or nonce word "device." And while, in some instances, claim language may otherwise describe the physical structure of a component despite the use of this generic word, here it does not. The claim language explains what the "safety device" does—i.e., "substantially prevent[s] rotation of at least one of the front shaft and the rear shaft in a first rotational direction"—but not what it looks like. '580 Patent col. 32 ll. 63-67. In other words, the claim language does not describe the physical structure of the device such as the type or shape of the components that perform this function. Unlike the "[m]any devices [that] take their names from the functions they perform . . . such as 'filter,' 'brake,' 'clamp,' 'screwdriver,' or 'lock,'" but still convey a convey physical, structural meaning, the term "safety device" does not. *Greenberg v. Ethicon Endo-Surgery, Inc.*, 91 F.3d 1580, 1583 (Fed. Cir. 1996); *accord Zeroclick*, 891 F.3d at 1008. Plaintiff has not provided the Court with any evidence showing that, like the above examples, the term "safety device" would "convey[] a particular structural meaning" to a person skilled in the art. *See Diebold Nixdorf*, 899 F.3d at 1301.

Plaintiff argues that the claims contain some structural language by pointing to the following claim language: the "safety device [is] coupled to at least one of the front shaft and the rear shaft." '580 Patent col. 32 ll. 61-62; *see* Pl.'s Responsive CC Br. at 11. The Federal Circuit's decision in *MTD* is instructive here. In *MTD*, even though the claim language at issue connoted some structure by "reciting that the mechanical control assembly is 'coupled to the left and right drive units,'" the Federal Circuit explained that the claim language as a whole still favored application of § 112 ¶ 6 because the rest of the claim language was primarily functional. *See* 933 F.3d at 1343. Here, as in *MTD*, although the '580 Patent's claim language contains some structural language by specifying that the "safety device" is coupled to one of the shafts, the claim language related to the term "safety device" focuses on function rather than structure. Accordingly, the Court holds

that the claim term "safety device" in the '580 Patent is a means-plus-function limitation under § 112 ¶ 6.

Plaintiff also asserts that "safety device" cannot be a means-plus-function limitation because the specification contains a physical description of the "safety device." Plaintiff points to the following as specification language:

> A number of safety devices may be used with the treadmill 10 to help prevent undesirable forward rotation of the running belt 16. FIG. 36 illustrates a safety device shown as a one-way bearing assembly 1300 according to an exemplary embodiment.

'580 Patent col. 27 ll. 7-15. Plaintiff argues that the above physical description of the safety device as a "one-way bearing assembly" would convey to a person skilled in the art a sense of the physical structures comprising the "safety device." Plaintiff's reliance on this passage in the specification is misplaced because this highlighted specification language describes an "exemplary embodiment"—i.e., one example of what the safety device in the claimed invention can look like as opposed to a description of what the invention must look like. *MTD*, 933 F.3d at 1343 ("[A] preferred embodiment disclosed in the specification cannot impart structure to a term that otherwise has none."); *id.* at 1344 ("That the specification discloses a structure corresponding to an asserted means-plus-function claim term does not necessarily mean that the claim term is understood by persons of ordinary skill in the art to connote a specific structure or a class of structures."). As such, Plaintiff reliance on an "exemplary embodiment" is insufficient to demonstrate that the term "safety device" would connote a particular physical structure to persons skilled in the art.[8]

Because it concludes that the term "safety device" in the '580 Patent is a means-plus-function limitation, the Court must now perform the next step of "determining 'what

---

[8] Plaintiff also notes that the examiner never stated "safety device" was a means-plus-function term during the prosecution of the patent, *see* Pl.'s Responsive CC Br. at 11; Pl.'s Opening CC Br. at 9, No statute or regulation requires that all means-plus-function claims must be identified at the time of prosecution in order for a Court to construe them as such.

structure, if any, disclosed in the specification corresponds to the claimed function.'" *Dyfan*, 28 F.4th at 1365 (quoting *Williamson*, 792 F.3d at 1351). Defendant correctly identifies the corresponding structure as the embodiments described in specification from column 27, line 7 to column 29, line 28. *See* Jt. CC Worksheet at 2; Def.'s Opening CC Br. at 3-4, 14; Dkt. 47, Def.'s Responsive CC Br. at 4. In those passages, the specification describes various devices, including one-way bearing assemblies, cam locking systems, taper locks, user operated pin systems, and band brake systems with a lever. *See* '580 Patent col. 27 ll. 7-15, col. 27 l. 66-col. 28 l. 1, col. 29 ll. 23-28. For the above reasons, the Court construes the claim term "safety device" in the '580 Patent as a means-plus-function claim limitation with the corresponding structure as a one-way bearing assembly, a cam locking system, a taper lock, a user operated pin system, or a band brake system with a lever.

ii. *"Safety Device" in the '884, '745, and '005 Patents*

Defendant proposes that the claim term "safety device" in the '884 Patent, the '745 Patent, and the '005 Patent be construed as "a device that includes the elements recited and that prevents any movement after allowing no or minimal movement." Jt. CC Worksheet at 2. Plaintiff proposes that the claim term be construed as "a device that permits movement in substantially only one direction." *Id.* Unlike the dispute surrounding the '580 Patent, neither party contends that the term "safety device" in these three patents should be construed as a means-plus-function claim.

The crux of the dispute underlying the parties' competing constructions centers on whether the construction for the term "safety device" should incorporate and reflect the prosecution disclaimer related to the claim term "substantially prevents." The claim language of the '884 Patent and the '745 Patent explains that the claimed "safety device" "substantially prevent[s]" "rotation[] of the running belt" in one direction. *See, e.g.*, '884 Patent col. 35 l. 60-col. 36 l. 8; '745 Patent col. 33 ll. 4-20. The claim language of the '005 Patent is substantively similar, explaining that the claimed "safety device" "substantially prevent[s] or resist[s] rotation of the running belt" in one direction "relative to the frame."

See, e.g., '005 Patent col. 33 ll. 4-16. Because these claims all use the term "substantially prevent" in describing the "safety device," the Court applies and incorporates the prosecution disclaimer it found regarding the term "substantially prevent" in construing the term "safety device." Accordingly, the Court construes the term "safety device" in the '884 Patent and the '745 Patent as "a device that includes the elements recited and restricts rotation to allow for only one rotational direction of movement." The Court construes the term "safety device" in the '005 Patent as "a device that includes the elements recited and restricts rotation to allow for only one rotational direction of movement or resists rotation in one direction of rotation."

Despite the Court's conclusion above that the identical claim term "safety device" in the '580 Patent should be construed as a means-plus-function limitation, the Court agrees with the parties that "safety device" as used in the '884, '745, and '005 Patents is not a means-plus-function limitation.[9] While the Federal Circuit has cautioned that "[w]here multiple patents derive from the same parent application and share many common terms," courts must generally "interpret the claims consistently across all asserted patents," this is not a hard and fast rule that applies in every instance. *See, e.g.*, *Samsung Elecs. Co. v. Elm 3DS Innovations, LLC*, 925 F.3d 1373, 1378 (Fed. Cir. 2019). In fact, this presumption of consistent interpretation only applies "unless otherwise compelled." *Omega*, 334 F.3d at 1334. Here, as set forth below, the different claim language surrounding the term "safety device" in the four patents warrants different constructions of the term "safety device."

While all of the asserted claims recite a "safety device," the four related patents use different claim language and describe the physical components of the "safety device" to different degrees. In contrast to the claim language of the '580 Patent which only describes

[9] While Plaintiff agrees that "safety device" in the '884, '745, and '005 Patents is not a means plus function claim, it argues that this conclusion means that the same term in the '580 Patent cannot be a means-plus-function claim.

"safety device" in terms of its function, the other three patents describe the physical form and structure of the "safety device" as such.

Independent claim 1 of the '745 Patent claims a "safety device" as follows:

> a safety device coupled to the running belt, the safety device at least partially supported by the support element, *wherein the safety device includes a first safety race element and a second safety race element, wherein at least one of the first and second safety race elements is adapted for rotation relative to the frame, and wherein one of the first and second safety race elements substantially surrounds the other of the one of the first and second safety race elements*;
>
> *wherein one of the first and second safety race elements and the running belt freely rotates in a first direction of rotation relative to the frame . . . .*

'745 Patent col. 33 ll. 4-20 (emphasis added).

Independent claim 30 of the '884 Patent claims a "safety device" as follows:

> a safety device coupled to the frame and the running belt, *the safety device having a first rotatable element and a second rotatable element, wherein at least one of the first and second rotatable elements are adapted for rotation relative to the frame;*

'884 Patent col. 35 l. 60-col. 36 l. 8 (emphasis added).

And independent claim 1 of the '005 Patent claims a "safety device" as follows:

> a safety device coupled to the frame and the running belt, *the safety device having a first element and a second element, the first element substantially surrounding the second element or the second element substantially surrounding the first element;*

'005 Patent col. 33 ll. 4-16 (emphasis added).

Unlike the '580 Patent, the other three patents—'745, '884 Patent, and '005—include claim language that describes the physical structure and form of the safety device justifying a non-means-plus-function construction for these three patents. The '745 Patent

claims a "safety device" that specifically includes "a first safety race element and a second safety race element." '745 Patent col. 33 ll. 6-7. The '884 Patent claims a "safety device" that specifically includes "a first rotatable element and a second rotatable element." '884 Patent col. 35 ll. 60-62. The '005 Patent claims a "safety device" that specifically includes "a first element and a second element, the first element substantially surrounding the second element." '005 Patent col. 33 ll. 4-6. Because the four different patents use different claim language and describe the physical form and structure of the "safety device" to varying degrees, different constructions of the same term are warranted under the relevant standards for means-plus-function claiming and claim construction in general. *See MTD*, 933 F.3d at 1341–42 ("[E]ven if the claims recite a nonce term followed by functional language, other language in the claim 'might inform the structural character of the limitation-in-question or otherwise impart structure' to the claim term.") (citation omitted); *Omega*, 334 F.3d at 1334 (explaining presumption of consistent interpretation only applies "unless otherwise compelled").

C. Disputed Construction: "Shaft"

The Court next turns to construing the disputed term, "shaft." Defendant proposes that the Court construe "shaft" as "a rotating element used to transmit power from one part to another." Jt. CC Worksheet at 2. Plaintiff, on the other hand, proposes that the word "shaft" is an unambiguous, widely understood term and should thus be given its plain and ordinary meaning, such as "hollow or solid element / part / rod / tube / member / piece." *Id.* The Court will therefore consider whether it is appropriate to import and incorporate an element of rotation in construing the claim "shaft."

The four patents at issue all contain the term "shaft." Independent claim 1 of the '580 Patent claims a manually powered treadmill containing "**a front shaft** rotatably coupled to the frame at the front end" and "**a rear shaft** rotatably coupled to the frame at the rear end." '580 Patent col. 32 ll. 51-52 (emphasis added). Independent claim 30 of the '884 Patent claims a manually powered treadmill containing "**a front shaft** coupled to the frame proximate the front end" and "**a rear shaft** coupled to the frame proximate the rear

end. '884 Patent col. 35 ll. 54-55 (emphasis added); *see also id.* col. 36 ll. 43-44, col. 38 ll. 14-20. Dependent claim 2 of the '005 Patent claims a manually powered treadmill containing "**a front shaft** coupled to the frame." '005 Patent col. 33 ll. 17-18 (emphasis added); *see also id.* at col. 33 ll. 21-23. Dependent claim 23 of the '745 Patent claims a treadmill "wherein the rotatable element comprises at least one of **a front rotatable shaft** coupled to the frame and **a rear rotatable shaft** coupled to the frame and spaced apart from **the front rotatable shaft**." '745 Patent col. 36 ll. 1-4 (emphasis added).

The fact that the '580 and '745 Patents use the terms "rotatable" or "rotatably coupled" to describe "shaft" militates against construing this element to have inherent rotational properties; doing so would render the adjective "rotatable" repetitive and superfluous. The Federal Circuit has "reinforced the importance of construing claim terms in light of the surrounding claim language, such that words in a claim are not rendered superfluous." *Digital-Vending Servs. Int'l, LLC v. Univ. of Phoenix, Inc.*, 672 F.3d 1270, 1275 (Fed. Cir. 2012) (citing *Phillips*, 415 F.3d at 1314); *see Intel Corp. v. Qualcomm Inc.*, 21 F.4th 801, 810 (Fed. Cir. 2021) ("It is highly disfavored to construe terms in a way that renders them void, meaningless, or superfluous.") (citation omitted). "For example, when a claim refers to 'steel baffles,' this 'strongly implies that the term "baffles" does not inherently mean objects made of steel.'" *Digital-Vending*, 672 F.3d at 1275 (quoting *Phillips*, 415 F.3d at 1314); *see also, e.g.*, *Intel*, 21 F.4th at 810 (rejecting proposed construction for the claim term "hardware buffer" that would render the word "buffer" superfluous). Here, two of the four related patents use the terms "rotatable" or "rotatably coupled" to modify the term "shaft." If the term "shaft" had inherent rotational qualities as Defendant contends, then there would be no need to use the word "rotatable" or "rotatably coupled" to modify a term that already means rotatable. Defendant's proposed construction would thus render the terms "rotatable" and "rotatably coupled" in the '580 and '745 Patents entirely superfluous—a result that case law urges courts to avoid. *See Digital-Vending*, 672 F.3d at 1275. As such, the claim language cuts against construing shaft as a "rotatable element."

An examination of the extrinsic evidence offered by the parties further demonstrates that shafts may, but do not necessarily, rotate. Plaintiff cites to a technical dictionary defining the term "shaft" as simply being "[a] long slender, usually cylindrical part." MCGRAW-HILL DICTIONARY OF SCIENTIFIC AND TECHNICAL TERMS 804 (5th ed. 1994). Plaintiff cites to another dictionary that defines "shaft" as "[a] long, usu[ally] cylindrical bar, esp[ecially] one that rotates and transmit power." WEBSTER'S II NEW COLLEGE DICTIONARY 1037 (3d ed. 2005). As the above divergent definitions demonstrate, a "shaft" can take the form of an object that rotates and transmits power but such qualities are not inherent in the definition. Despite their arguments to the contrary, even Defendant's submissions support this conclusion by pointing to an example of a shaft that does not rotate: a technical article that it submitted explains that an "axle" is both "a type of shaft" and "[a] non-rotating element." Dkt. 45-6, Def.'s Ex. 5 at pp. 150-51.[10] As such, the extrinsic evidence also supports rejecting Defendant's proposed construction that improperly narrows the term "shaft" to only those that rotate.

For the above reasons, the Court rejects Defendant's proposed construction for the term "shaft." Because it agrees with Plaintiff that the term has a widely used and unambiguous meaning, it adopts Plaintiff's proposal that the term be given its plain and ordinary meaning.

D. Disputed Construction: "Element"

The Court next examines the construction of the disputed term "element" in the '005 Patent. Defendants contends that "element" should be construed as an "annular-shaped component." Jt. CC Worksheet at 3. Plaintiff, on the other hand, asserts that no construction of this claim term is required; thus, it should just be given its plain and ordinary meaning. *Id.* The Court therefore considers whether the claimed "element[s]" in the '005 Patent should be construed as annular, i.e., ring-shaped, components.

---

[10] Slidingmotion.com, What is a shaft? Types, Material & Design, https://slidingmotion.com/what-is-shaft/. Dkt. 45-6, Def.'s Ex. 5 at pp. 148-65.

The Court begins its analysis of the parties' dispute by analyzing the relevant claim language. Independent claim 1 of the '005 Patent claims "[a] manually powered treadmill," comprising among other things:

> a safety device coupled to the frame and the running belt, the safety device having **a first element and a second element, the first element substantially surrounding the second element or the second element substantially surrounding the first element**;
>
> wherein **one of the first and second elements** of the safety device and the running belt freely rotate in a first direction of rotation relative to the frame, however, in a second direction of rotation, opposite the first direction of rotation, the **one of the first and second elements** is substantially prevented from rotation relative to the frame . . . .

'005 Patent col. 33 ll. 4-15 (emphasis added); *see also id.* at col. 33 ll. 46-52, col. 34 ll. 1-5, col. 34 ll. 32-43. As seen above, the claim language does not prescribe a particular shape for "element"—instead, it merely explains that one of the elements (1) "substantially surrounds" the other and (2) is able to freely rotate in only one direction. Claim language that fails to specify any particular shape for "element," *a fortiori*, is insufficient to dictate that the first and second "element" must both be annular (i.e., ring-shaped) components. As such, the claim language does not support Defendant's proposed construction.

Without providing any evidentiary support, Defendant argues that the Court cannot avoid construing "element" as ring-shaped because that is the only shape that would allow two "elements" to "surround and be able to rotate relative to each other." Def.'s Opening CC Br. at 19. Plaintiff contradicts this unsupported proposition by presenting the Court with the following counterexample: an animation featuring a square-shaped outer component surrounding a square-shaped inner component that freely rotates clockwise. *See* Pl.'s Responsive CC Br. at 17 (citing Dkt. 48-1, ("Koley Decl.") ¶ 5, Ex. D). As such, the Court rejects Defendant's argument that logical necessity renders its proposed construction unavoidable.

Defendant argues that if the Court rejects its contention that "element" connotes ring-shaped structures, then "element" must be construed as a means-plus-function claim because there is no other description of the physical structure of an "element." Def.'s Opening CC Br. at 19-20. The Court agrees with Defendant. Here, the claim language at issue uses the generic or "nonce" word "element" creating a presumption that this is a means-plus-function claim limitation unless accompanying language imparts sufficient information about the physical structure of "element." *See* '005 Patent col. 33 ll. 4-15, col. 33 ll. 46-52, col. 34 ll. 1-5, col. 34 ll. 32-43; *Zeroclick*, 891 F.3d at 1008; *MTD*, 933 F.3d at 1341–42.

Here, the generic term "element" is not accompanied by other language or information that would provide a person skilled in the art a sense of its physical structure. Nor does the Plaintiff provide evidence demonstrating that the word "element" is used in common parlance or by persons skilled in the art to convey a sense of specific, physical structures.[11] The claim language itself primarily uses functional language to describe the claimed "elements": one of them "freely rotate[s]" in one direction of rotation relative to the frame while being "substantially prevent[ed]" from rotating in the other direction. *See* '005 Patent col. 33 ll. 9-15, col. 33 l. 51-col. 34 l. 5, col. 34 ll. 33-39. That one "element"

---

[11] In arguing that the claim term "element" need not be construed, Plaintiff cites to several district court claim construction orders involving the word "element." Pl.'s Responsive CC Br. at 17 (citing *Peregrine Semiconductor Corp. v. RF Micro Devices, Inc.*, No. 313CV00725HWMC, 2014 WL 12577034, at *8 (S.D. Cal. Apr. 23, 2014); *Gene Pool Techs., Inc. v. Coastal Harvest, LLC*, Nos. 5:21-cv-01328-JWH-SHK, 2022 U.S. Dist. LEXIS 198562, at *20 (C.D. Cal. Oct. 23, 2022); *Xoft, Inc. v. Cytyc Corp.*, No. C-05-05312 RMW, 2007 WL 1241990, at *10 (N.D. Cal. Apr. 27, 2007)). The Court does not find Plaintiff's reliance on any of these decisions persuasive as they are all distinguishable from the present case. In each of the cited cases, the claim term at issue contained additional descriptive words that modified the term "element." *See Peregrine*, 2014 WL 12577034, at *8 (construing "switching element"); *Gene Pool*, 2022 U.S. Dist. LEXIS 198562, at *20 (construing "heating element"); *Xoft*, 2007 WL 1241990, at *10 (construing "expandable surface element"). In contrast, here, the claims simply recite a "first element" and a "second element" without any meaningful descriptive modifiers. *See* '005 Patent col. 33 ll. 4-15, col. 33 ll. 46-52, col. 34 ll. 1-5, col. 34 ll. 32-43. In addition, Plaintiff's reliance on *Peregrine* and *Xoft* is also not persuasive as both of those claim construction orders were issued prior to the Federal Circuit's *en banc* decision in *Williamson*, which changed the legal test for evaluating means-plus-function claim limitations.

substantially surrounds the other element is the only physical structure information the claim provides. *See id.* at col. 33 ll. 5-8, col. 33 ll. 47-50, col. 34 ll. 40-43. While stating that one element surrounds the other explains their relative positioning, it does not elucidate the actual structure of those elements. Without more, this is insufficient to connote a "sufficiently definite structure." *See MTD*, 933 F.3d at 1343. Accordingly, the Court holds that the claim terms "first element and a second element," "first and second elements," and "element," in the '005 Patent are means-plus-function claim limitations.

Because they are means-plus-function limitations, the Court now performs the second step of "determining 'what structure, if any, disclosed in the specification corresponds to the claimed function.'" *Dyfan*, 28 F.4th at 1365 (quoting *Williamson*, 792 F.3d at 1351). As Defendant correctly notes, inner ring 1304, outer ring 1306, inner ring 1504, and outer ring 1506 are the only components of the safety device described in the specification where one component surrounds the other and one of the two components rotates. *See* '005 Patent col. 27 ll. 22-29, col. 27 ll. 49-53, col. 28 ll. 14-32, figs. 2, 38. Accordingly, these are the correct corresponding structures for performing the claimed function. *See Williamson*, 792 F.3d at 1352.

In sum, the Court construes the claim terms "element," "first element and a second element," and "first and second elements" in the '005 Patent as means-plus-function claim limitations under 35 U.S.C. § 112 ¶ 6. The claimed function of the terms is wherein one of the elements freely rotates in a first direction of rotation relative to the frame while being substantially prevented from rotating in a second direction of rotation relative to the frame, opposite the first direction of rotation. The corresponding structure for this functional claim is inner ring 1304 and outer ring 1306 or inner ring 1504 and outer ring 1506.[12]

---

[12] Although the parties' briefing focused on the claim term "element" in the claims of the '005 Patent, *see* Def.'s Opening CC Br. at 18; Jt. CC Worksheet at 3, the claim term "element" is also found in the claims of the '884 Patent. The Court's analysis of the claim term "element" in the '005 Patent applies equally to the claim term "element" in the '884 Patent. For the same reasons, the Court construes the

E. Disputed Construction: "Race Element"

The Court next turns to construing "race element" which appears in the '745 Patent as follows:

> a safety device coupled to the running belt, the safety device at least partially supported by the support element, wherein the safety device includes **a first safety race element and a second safety race element**, wherein at least one of **the first and second safety race elements** is adapted for rotation relative to the frame, and wherein one of **the first and second safety race elements** substantially surrounds the other of the one of **the first and second safety race elements**;
>
> wherein one of **the first and second safety race elements** and the running belt freely rotates in a first direction of rotation relative to the frame . . .

'745 Patent col. 33 ll. 4-20 (emphasis added). Defendant proposes that the claim term "race element" in the '745 Patent should be construed as "an annular-shaped component separated by another annular-shaped component by rolling elements such that the annular-shaped components can rotate relative to each other." Jt. CC Worksheet at 3. Plaintiff asserts that the claim term should be given its plain and ordinary meaning, such as "one of the inner and outer rings of a bearing."[13] *Id.* From their respective proposed constructions, it appears both parties agree that "race elements" are two ring-shaped components of a

---

claim terms "element," "first rotatable element and a rotatable second element," and "first and second rotatable elements" in the '884 Patent as means-plus-function claim limitations under 35 U.S.C. § 112 ¶ 6. The claimed function of the terms is wherein one of the rotatable elements freely rotates in a first direction of rotation relative to the frame while being substantially prevented from rotating in a second direction of rotation relative to the frame, opposite the first direction of rotation. The corresponding physical structure for the functional claim is inner ring 1304 and outer ring 1306 or inner ring 1504 and outer ring 1506.

[13] The Court notes that neither party contends that the claim term "race element" is a means-plus-function claim term under 35 U.S.C. § 112 ¶ 6. *See generally* Def.'s Opening CC Br. at 20-23; Pl.'s Opening CC Br. at 19-10.

bearing[14] but dispute whether they need to be separated by rolling elements that enable their rotation.

Because the '745 Patent's specification describes examples of "race elements" that are not separated by rolling elements, the Court must reject Defendant's proposed construction which imposes such a requirement. "'A claim construction that excludes a preferred embodiment is rarely, if ever correct and would require highly persuasive evidentiary support.'" *Kaufman v. Microsoft Corp.*, 34 F.4th 1360, 1372 (Fed. Cir. 2022) (quoting *Epos Technologies Ltd. v. Pegasus Technologies Ltd.*, 766 F.3d 1338, 1347 (Fed. Cir. 2014)); *see Duncan Parking Techs., Inc. v. IPS Grp., Inc.*, 914 F.3d 1347, 1364 (Fed. Cir. 2019) ("[A] claim construction that excludes the preferred embodiment is highly disfavored."). Here, the specification includes an exemplary embodiment of race elements where the inner ring and outer ring are separated by a "plurality of sprags" as opposed to rolling elements. '745 Patent col. 27 ll. 11-29. The specification further describes "another exemplary embodiment" where "the one-way bearing may include rollers in addition to sprags"— meaning that the two rings of the bearing are separated by both sprags and rolling elements as opposed to only rolling elements. *Id.* col. 27 ll. 40-42. In sum, the specification references exemplary embodiments that include either only sprags between the rings (i.e., between the races) or some sprags and some rollers. Defendant's proposed construction requiring that the race elements be separated by rolling elements would exclude the above preferred embodiments. *See Kaufman*, 34 F.4th at 1372. Here, in the absence of highly

---

[14] From the proposed constructions, the parties appear to agree that the claimed "race element" must be annular, i.e., ring-shaped. The parties also appear to agree that a "race" is a component of a bearing. Plaintiff's proposed construction expressly states that a "race" is one of the rings in a bearing, Jt. CC Worksheet at 3, while Defendant provides the Court with extrinsic sources supporting that construction. *See* AN INTRODUCTION TO MECHANICAL ENGINEERING 145 (4th ed. 2017) (explaining that a "roller contact bearing" is comprised of: "[a]n inner race;" "[a]n outer race;" "[r]olling elements in the form of balls, cylinders, or cones;" and "[a] separator that prevents the rolling elements from rubbing up against one another"); Dkt. 45-8, Def.'s Ex. 7 at p. 176 (explaining that a "bearing" is comprised of an "Inner Ring," an "Outer Ring," "Rolling Element[s]," a "Cage (Retainer)," "Lubrication," and "Other Optional Bearing Components"). Thus, the parties agree that a "race" is one of the two rings in a bearing.

persuasive support for Defendant's proposal, the Court declines to accept a construction that would exclude preferred embodiments from the scope of the claims. Instead, the Court will adopt Plaintiff's proposal that the claim term "race element" means "one of the inner and outer rings of a bearing"—a construction which aligns with the agreement between the parties that the race elements are ring-shaped.

F. Disputed Construction: "Interference Between the Safety Device and At Least One of the First and Second Rotatable Elements"

The Court next addresses Defendant's argument that claims 30, 37, 50, and 57 of the '884 Patent are indefinite and, therefore, invalid due to the following claim language: "interference between the safety device and at least one of the first rotatable element and the second rotatable element." Def.'s Opening CC Br. at 23-25. Defendant argues that this language requires that an element (i.e. the "safety device") interferes with an element of itself (i.e., one of the "rotatable element[s]")—a result that is nonsensical and renders these patent claims indefinite and invalid. *Id.* at 24.

A claim is invalid for indefiniteness "if its language, when read in light of the specification and the prosecution history, 'fail[s] to inform, with reasonable certainty, those skilled in the art about the scope of the invention.'" *Interval Licensing LLC v. AOL, Inc.*, 766 F.3d 1364, 1369–70 (Fed. Cir. 2014) (quoting *Nautilus, Inc. v. Biosig Instruments, Inc.*, 572 U.S. 898, 901 (2014)). The Federal Circuit has explained that "[o]ne circumstance in which claims are indefinite is where the claims, as properly construed, are nonsensical." *Horizon Pharma, Inc. v. Dr. Reddy's Lab'ys Inc.*, 839 F. App'x 500, 505 (Fed. Cir. 2021); *see, e.g.*, *Trustees of Columbia Univ. in City of New York v. Symantec Corp.*, 811 F.3d 1359, 1366–67 (Fed. Cir. 2016) (holding claims describing the extraction of machine code instructions from something that did not have machine code instructions indefinite on the grounds that the claims were "nonsensical in the way a claim to extracting orange juice from apples would be"). The party asserting indefiniteness bears "the burden of proving indefiniteness by clear and convincing evidence." *BASF Corp. v. Johnson Matthey Inc.*, 875 F.3d 1360, 1365 (Fed. Cir. 2017) (citing *Biosig Instruments, Inc. v. Nautilus, Inc.*, 783

F.3d 1374, 1377 (Fed. Cir. 2015)).

The Court disagrees with Defendant's position that the challenged claim language is nonsensical and, therefore, invalid for indefiniteness. The challenged language appears in independent claim 30 the '884 Patent as follows and in the other claims in a similar context:

> wherein the running belt and one of the first and second rotatable elements of the safety device freely rotate in a first direction of rotation relative to the other of the first and second rotatable elements of the safety device, but **interference between the safety device and at least one of the first and second rotatable elements** substantially prevents rotation in a second direction of rotation.

'884 Patent col. 35 l. 60-col. 36 l. 8 (emphasis added). Defendant argues that the above claim language is nonsensical because a device as a whole cannot interfere with one of its own components. According to Defendant, the claim language embodies such a contradiction in terms when it describes the safety device as "interfering" with one of its rotatable parts. After reviewing the challenged language in light of the specification, the Court disagrees. To the contrary, it finds that the '884 Patent features an invention where *a component* of the safety device interferes with other rotatable components, thereby restricting the rotation in one direction.

The exemplary embodiments described in the '884 Patent's specification illustrates this distinction. In these embodiments, the safety device takes the form of a "one-way bearing assembly," '884 Patent col. 27 ll. 13-15, comprised of an inner ring and an outer ring with a "plurality of sprags" between the two rings. This one-way bearing assembly restricts motion via the plurality of sprags disposed between the two rings of the bearing: "The sprags are asymmetric, and, thus, provide for motion in one direction and prevent rotation in the opposite direction." *Id.* at col. 27 ll. 27-29; *see also id.* at col. 28 ll. 5-23 (describing a similar exemplary safety device that is a "one-way bearing assembly" with an inner ring, an outer ring, and a plurality of sprags, where the sprags provide for motion in one direction). The specification explains that interference between the sprags and one

of the rings (i.e. one of the rotatable elements) is what allows the treadmill belt to rotate in only one direction. *See* '884 Patent at col. 27 ll. 27-29, col. 28 ll. 21-23. This guidance from the specification makes clear that it is not the entire safety device that interferes with its rotatable elements, but, rather, one component of the safety device (for example, a plurality of sprags) that interfere with the rotatable components to substantially prevent rotation of the treadmill belt in one direction. Accordingly, the Court finds that Defendant has not met its burden of proving by clear and convincing evidence that the claim term at issue is nonsensical and, therefore, indefinite. The Court therefore rejects Defendant's indefiniteness challenge.

IV. CONCLUSION

For the reasons discussed, the Court hereby adopts the constructions set forth above.

IT IS SO ORDERED.

Dated: November 14, 2023

Honorable Jinsook Ohta
United States District Judge