EXHIBIT 1

IN THE UNITED STATES DISTRICT COURT
DISTRICT OF CONNECTICUT

CHAPCO, INC. and SAMSARA, LLC	:	CIVIL ACTION No.
	:	3:15cv01665 (JCH)
Plaintiffs,	:	
	:	
v.	:	
	:	
WOODWAY USA, Inc.	:	
	:	
Defendant.	:	March 2, 2017

OPENING EXPERT REPORT OF DR. ROBERT GIACHETTI RE: INVALIDITY OF UNITED STATES PATENT NO. 8,986,169 and UNITED STATES PATENT NO. 9,039,580

TABLE OF CONTENTS

I. INTRODUCTION AND SUMMARY OF MY OPINIONS 2
II. QUALIFICATIONS AND EXPERIENCE 4
III. MATERIALS CONSIDERED FOR THIS REPORT 6
IV. EXHIBITS 7
V. UNDERSTANDING OF THE LAW 7
A. Invalidity 10
1. Anticipation 10
2. Obviousness 11
B. Combining References 12
1. Reason to Combine 12
2. All Elements 13
C. Indefiniteness 13
D. PHOSITA - Power Transmission Technology 13
VI. DESCRIPTION OF THE PRIOR ART 14
A. Non-Motorized Treadmills 14
B. The Asserted Patents 34
1. U.S. Patent No. 8,986,169 ("Bayerlein '169") 34
2. U.S. Patent No. 9,039,580 ("Bayerlein '580") 38
VII. COMPARISON OF THE PRIOR ART TO THE ASSERTED CLAIMS 41
G. Motivation to Combine References 54
A. CONCLUSION 56

I. INTRODUCTION AND SUMMARY OF MY OPINIONS

1. I, Robert S. Giachetti, have been retained in this matter by counsel for Samsara Fitness, LLC ("Samsara") and Chapco Inc. ("Chapco"). I have been informed that Woodway USA Inc. ("Woodway") has asserted that a non-motorized treadmill product manufactured and sold by Samsara, identified as the TrueForm Runner, infringes several claims of U.S. Patent 9,039,580 titled Manual Treadmill and Methods of Operating The Same (herein Bayerlein '580) as well as U.S. Patent 8,986,169 Manual Treadmill and Methods of Operating The Same (herein Bayerlein '169).

2. I have been asked by counsel for Samsara and Chapco to independently review the asserted claims of Bayerlein '580 and Bayerlein '169 and determine whether each asserted claim is valid. I understand that Bayerlein '169 and Bayerlein '580 patents were issued by the United States Patent and Trademark Office ("USPTO") and as such there is a presumption of validity. I have also been informed that clear and convincing evidence of invalidity is required to overcome this presumption.

3. I undertook that independent review of each asserted claim. It is my opinion to a reasonable degree of engineering certainty that there is clear and convincing evidence that each asserted claim of Bayerlein '169 and Bayerlein '580 patents is invalid under 35 U.S.C. §§ 102, 103 and/or 112. The clear and convincing evidence on which I rely is included in this Report:

U.S. Patent No. 8,590,169
(asserted claims 11, 12, 12, 13, 14, 15, 16)

11, 12, 13	Socwell (U.S. Patent No. 5,709,632	102(b)
11, 12, 13, 14, 15 and 16	Pasqualin Application 2006/0287165 in combination with Socwell	103
11, 12, and 16	Cutter (U.S. Patent No. 3,642,279) in combination with Haber (U.S. Patent No. 5,411,455)	103
11, 12, 13, 14, 15 and 16	Schönenberger (U.S. Patent No. 4,334,676) in combination with Haber	103
11, 12, 13, 14, 15 and 16	Schmidt (U.S. Patent No. 1,211,765)	102/103

11, 12, 13, 14, 15 and 16	Schmidt (U.S. Patent No. 1,211,765) in combination with Chickering (U.S. Patent No. 3,637,206)	102/103
11, 12, 13, 14, 15 and 16	Schmidt (U.S. Patent No. 1,211,765) in combination with Magid (U.S. Patent No. 5,538,489)	102/103
11, 12, 13, 14, 15 and 16	Schmidt (U.S. Patent No. 1,211,765) in combination with Zeibell (U.S. Patent No. 641,424)	102/103

U.S. Patent 9,039,580
(asserted claims 1, 4, 5, 6, 10, 11, 12, 13, 14, 18, 19, 20, and 25)

1, 2, 3, 4, 5, 6, 10, 11, 12, 13, 14, 18, 19, 20, 21, 22, and 25	Socwell (U.S. Patent No. 5,709,632)	102(b)
1, 2, 3, 4, 5, 6, 10, 11, 12, 13, 14, 18, 19, 20, 21, 22, and 25	Haber (U.S. Patent No. 5,411,455) in combination with Socwell	103
1, 2, 3, 4, 5, 6, 10, 11, 12, 13, 14, 18, 19, 20, 21, 22, and 25	Magid (U.S. Patent No. 5,538,489) in combination with Socwell	103
1, 2, 3, 4, 5, 6, 10, 11, 12, 13, 14, 18, 19, 21, 22, and 25	Cutter (U.S. Patent No. 3,642,279) in combination with Magid	103
1, 2, 3, 4, 5, 6, 10, 11, 12, 18, and 25	Schönenberger (U.S. Patent No. 4,334,676) in combination with Magid	103
1, 4, 5, 6, 10, 11, 12, 18, and 25	Abelbeck (U.S. Patent No. 6,042,514) in combination with Magid	103

1, 4, 5, 6, 10, 11, 12, 14, 18, and 25	Eschenbach (U.S. Patent No. 6,053,848) in combination with Magid	103
1, 4, 5, 6, 10, 11, 12, 14, 18, and 25	Schmidt (U.S. Patent No. 1,211,765)	102/103
1, 2, 3, 4, 5, 6, 10, 11, 12, 14, 18, and 25	Schmidt (U.S. Patent No. 1,211,765) in combination with Zeibell (U.S. Patent No. 641,424)	102/103
1, 2, 3, 4, 5, 6, 10, 11, 12, 13, 14, 18, 19, 21, 22, and 25	Chickering (U.S. Patent No. 3,637,206) in combination with Magid	103

4. The opinions I provide herein are my own and are based on my independent review and on my education, experience, training, and skill accumulated in the practice of engineering. Between now and such time that I may be asked to testify at deposition and/or trial, I expect to continue my review, evaluation, and analysis.

5. I also expect to review reports submitted by Woodway's expert(s) and expressly reserve the right to amend or supplement this report, as appropriate, after considering the opinions set forth in those Woodway reports. I also expressly reserve the right to amend or supplement this report based on additional material information that may become available or result from our continuing investigation.

II. QUALIFICATIONS AND EXPERIENCE

6. Bayerlein '580 and Bayerlein '169 both relate to exercise devices constructed from commonly available mechanical machinery hardware and structural elements. There are no electronics or software elements at issue in the asserted claims. Accordingly, in my opinion, a person having ordinary skill in the art ("PHOSITA") of these two patents is a mechanical engineer

with at least one year of machine design experience related to power transmission equipment[1] and a demonstrated understanding of the biomechanics of exercise, including knowledge in the field of anthropometry (i.e. the study of human proportion).

7. I am a Licensed Professional Engineer in Illinois, with over 10 years of experience in mechanical engineering. My experience in machinery and mechanisms spans numerous industries; I have worked directly designing mechanical systems and machinery and have consulted on the operation of machinery in various fields including rail, exercise equipment, and industrial machinery.

8. I am currently employed by Exponent, Inc. as a Managing Engineer. I joined Exponent in June 2008 after working in the Biomechanics Laboratory at University of Wisconsin-Madison and University of Illinois at Chicago where I focused my research on the forces within the knee joint and coordination of lower limb musculature as it relates to foot forces and balance during walking, standing, running, etc. While at the University of Wisconsin-Madison biomechanics lab, my research responsibilities included designing, developing and constructing equipment used to harness participants in efforts to analyze and characterize their lower limb force capabilities. These research responsibilities also involved the use and disassembly of treadmills to characterize force and balance capabilities of participants. As part of these research responsibilities I reviewed studies focused on using treadmills and similar devices as rehabilitation devices (e.g. the "Locomat"). During this time, I also assisted in the preliminary development of a force measuring treadmill intended to dissociate the foot forces used in walking from the requirements imposed by upright posture.

9. My responsibilities with Exponent include engineering consulting and testing with respect to exercise equipment, consumer product design and machinery design, product and machinery performance, accident reconstruction, and failure analysis.

---

[1]Mechanical Power Transmission apparatus includes gears, belts, chains, bearings, rollers, flywheels, clutches, cranks, conveyors and couplings. See for example, Mechanical Power Transmission Handbook 2006. 4th ed.

10. Prior to attending graduate school, I worked as a project engineer, designing industrial machinery at Braner USA and I worked as an estimator and designer at Alloy Sling Chain, IND. LTD.

11. I am an active member of the ASTM International committees[2] that oversee sports equipment and consumer products. I have been recognized as an expert in mechanical power transmission equipment and serve on the American Society of Mechanical Engineers (ASME) Power Transmission and Gearing Committee. I have also participated, by invitation, in the National Council of Examiners for Engineering and Surveying (NCEES) Mechanical Professional Activities and Knowledge Studies (PAKS) committee. This committee reviews and evaluates the problems and problem types that appear on the Mechanical Engineering Professional Engineering exam.

12. For nearly 18 years, I have worked in the area of machine design and biomechanical applications of machine design. These machines have ranged from chairs, to standard consumer level treadmills, to commercial weightlifting equipment and other specialized types of exercise equipment.

13. My Curriculum Vitae is attached as Exhibit A along with my current four-year testimony list.

14. I am a salaried employee of Exponent. In 2017 Exponent charges an hourly rate of $315 for my time, plus reasonable expenses. I have no financial interest in the outcome of this case.

III. MATERIALS CONSIDERED FOR THIS REPORT

15. I have attached as Exhibit B a list of materials that I considered and/or relied upon in reaching my opinion. I have examined a TrueForm Runner and I have also relied on my

[2] ASTM Committee F08 on Sports Equipment, Playing Surfaces, and Facilities; and ASTM Committee F15 on Consumer Products.

education, training, and professional experience in the design and testing of machinery and mechanisms, and my personal examination of the accused and similar equipment. I reserve the right to update this Exhibit and to rely on additional documents and testimony as I become aware of them and, if appropriate, to amend and/or supplement my opinions accordingly.

IV. EXHIBITS

16. At any hearing or other proceeding in this case, I may provide and rely on visual aids and demonstrative exhibits to demonstrate basic principles of practical mechanical design and implementation, and the technologies that are the subject of Bayerlein '580 and Bayerlein '169. In addition, I may provide and rely on aids and demonstratives, such as charts, models or videos, to demonstrate my opinions and the bases for them. Examples of these visual aids and demonstrative exhibits may include claim charts, patent drawings, excerpts from patent specifications, file history, discovery responses, *Markman* materials, deposition testimony, deposition exhibits, or documents produced by the parties in this litigation, or obtained by various websites, as well as charts, models, diagrams, videos, and any materials or computer-generated videos. I reserve the right to rely on materials in the future not discussed herein. I have not yet selected which specific exhibits I may use, although the patents and images identified and incorporated within the report, in whole or in part, may be exhibits. Those exhibits have not yet been prepared.

V. UNDERSTANDING OF THE LAW

17. I have been retained as an engineer, not as an expert on patent law. I have general familiarity with patent law principles from my professional experiences. Additionally, counsel to Samsara and Chapco has provided citations to legal principles relating to patents and patent infringement/validity that govern the issues on which I was asked to opine in this matter.

18. As noted above, I have been informed that there is a presumption of validity when a patent is issued. I have been informed that invalidity can only be demonstrated by clear and convincing evidence. I also understand that each claim of a patent is presumed to be valid independently of the validity of the other claims in the patent. I understand that for a particular claim to be deemed invalid, every element of this claim must be present in a single piece of prior art or in some obvious combination of prior art as that term is defined in 35 U.S.C. § 102.

19. I have been informed that in order to determine whether a patent claim is invalid, the claim terms must first be interpreted, and I understand that the Court conducted a claim construction hearing on November 28, 2016. I have read the Claim Construction Ruling that issued following that claim construction hearing.[3] In my analysis I have considered the claim terms using their plain and ordinary meaning as I believe a PHOSITA would have where the claim term has not been defined by the Court or is not indefinite. If the Court provided a construction, I have applied that construction to each applicable claim term in accordance with the Claim Construction Ruling dated December 8, 2016.

20. I understand that the parties disputed the construction of certain claim terms and that the Court construed disputed terms in the Claim Construction Ruling as follows:[4]

a. Bearing Rail
   - Means: "A rail with bearings whose top profile corresponds to the shape of the running surface"

b. A safety device cooperating with the rear shaft
   - Means: "A safety device adjoined to the rear shaft"

c. Coupled
   - Means: "the joining of two members directly or indirectly"

d. Running Surface

[3] Dkt. No. 76.

[4] Claim Construction Ruling, p. 28.

- Means: "The portion of the running belt upon which a user could place their foot during normal operation"[5]

21. The word "support" or a variant is used throughout Bayerlein '169 and Bayerlein '580 generally to indicate some manner of weight bearing or ability to bear weight though some manner of vertical force capability transmitted directly, element to element, in accordance with the Court's interpretation of this usage. Examples within the common specification suggest the plain meaning of support (i.e. weight bearing or vertical force capability) and include "supported by the front shaft" (Bayerlein '169 col. 2, 40-45), or "support member," (Bayerlein '169 col. 3, 25-30), "help support a user" (Bayerlein '169 col. 15, 15-17), or "supported in tension about." (Bayerlein '169 col. 16, 67).

22. However, in contrast to these uses of the support-based term, there are numerous other instances within Bayerlein '169 and Bayerlein '580 that are inconsistent with the plain uses of the word "support." A few examples of these instances include: "support wall" (Bayerlein '169 col. 22, 25-30), "supports an inner ring 1504..." (Bayerlein '169 col. 27, 19-20), "supports and outer ring…" (Bayerlein '169 col. 28, 10-15), "is supported outboard of and adjacent to the inner ring…" (Bayerlein '169 col. 28, 22-25), and "The housing 1502 is supported by a stud 1520 which is coupled to the frame 40. The stud 1520 may be separated or spaced apart from the housing…" (Bayerlein '169 col. 28. 26-30). Notably, stud 1520 does not provide weight bearing or "support" to housing 1502, as depicted in Fig. 38. Furthermore, housing 1502 does not "support" surface 1504, rather, shaft 68 "supports" the one way bearing element and the bearing element that is comprised of surface 1504 and 1506 supports the housing; without stud 1520 in place, the bearing

[5] Could also be defined as "part of" a foot

housing would not fall off due to lack of "support," as understood by the common usage of the word in the specification.

23. To a PHOSITA, "support" can be achieved by various structural elements. For example, one may "support" a machine element by welding it to the side of another element; bolting it to the underside of another machine element, laying it on top of a machine element; coupling it to another machine element; placing the machine element on the floor, and so on. Without clarification as to the structural nature of the "support", there is no viable way of narrowing the possibilities with reasonable certainty.

24. The claims, read in light of the specification delineating the patents in suit, and the prosecution history, fail to inform, with reasonable certainty, a PHOSITA, already familiar with machinery design and exercise equipment, about the scope of the invention because a PHOSITA would not be able to determine whether two structures are required to be in physical contact, directly joined, or whether intervening structural elements are necessary in order for one structure to "support" another, i.e. whether these "support" terms define the existence of a pair of structures wherein one structure captures the corresponding structure in a pair or whether the one structural element transmits the entire or partial load directly from the corresponding structure in the required pair.

A. Invalidity

1. Anticipation

25. I have been informed and understand that in order to demonstrate invalidity of a patent claim based on anticipation under 35 U.S.C. § 102, there must be clear and convincing evidence that (a) the invention was known or used by others in this country, or patented or described in a printed publication in this or a foreign country, before the invention thereof by the applicant for a patent, or (b) the invention was patented or described in a printed publication in

this or a foreign country or in public use or on sale in this country, more than one year prior to the date of the application for patent in the United States. 35 U.S.C. § 102(a), (b). The Bayerlein '580 patent priority date is March 17, 2009. The Bayerlein '169 patent priority date is also March 17, 2009.

26. I have been informed and understand that if every element in a claim is found—expressly or inherently—in a single prior art reference, then the claim is anticipated and invalid.[6] This is also true even where the prior art reference did not appreciate or recognize the "inventive concept" of the invention claimed in the challenged patent ("Our cases have consistently held that a reference may anticipate even when the relevant properties of the thing disclosed were not appreciated at the time."). [7]

2. Obviousness

27. I have been informed and understand that a patent claim is invalid if it can be shown by clear and convincing evidence that "the differences between the subject matters sought to be patented and the prior art are such that the subject matter as a whole would have been obvious at the time the invention was made to a person having ordinary skill in the art to which said subject matter pertains." 35 U.S.C. § 103(a).

28. I understand obviousness is a question of law that considers (1) the scope and content of the prior art; (2) any differences between the claimed subject matter and the prior art; (3) the level of skill of one in the art; and (4) where in evidence, so-called secondary considerations, such as commercial success, long-felt but unsolved needs, and the failures of others.[8]

---

[6] See *Planet Bingo, LLC v. Gametech Int'l, Inc*., 472 F.3d 1338, 1346 (Fed. Cir. 2006)

[7] *Verdegaal Bros., Inc. v. Union Oil Co. of Cal*., 814 F.2d 628, 633 (Fed. Cir. 1987); see *also Abbott Labs. v. Baxter Pharm. Prods. Inc*., 471 F.3d 1363, 1367 (Fed. Cir. 2006)

[8] See *Graham v. John Deere Co. of Kansas City*, 383 U.S. 1, 17-18 (1966).

B. Combining References

1. Reason to Combine

29. I have been informed that in order to combine prior art references in an obviousness analysis, motivation or reason to combine them must be articulated and made explicit. ("It is well established that "[t]he normal desire of artisans to improve upon what is already generally known can provide the motivation to optimize variables.");[9] ("[A]n implicit motivation to combine exists . . . when the 'improvement' is technology-independent and the combination of references results in a product or process that is more desirable, for example because it is stronger, cheaper, cleaner, faster, lighter, smaller, more durable, or more efficient.").[10]

30. An effort that merely makes a slight modification to the prior art using the same elements, performing the same functions, and achieving the same result is not novel.[11] "In determining whether the subject matter of a patent claim is obvious, neither the particular motivation nor the avowed purpose of the patentee controls."[12] Rather, "if a person of ordinary skill can implement a predictable variation [of a work], § 103 likely bars its patentability."[13]

31. I understand that it is improper to use hindsight as a reason to combine prior art references. In other words, it is improper to look to the patented invention, or references that post-date the patented invention, to find a reason to combine various references that pre-date the patented invention.

---

[9] *In re Ethicon*, 844 F.3d 1344, 1351 (Fed. Cir. 2017).

[10] See *also DyStar Textilfarben GmbH & Co. Deutschland KG v. C.H. Patrick Co.*, 464 F.3d 1356, 1368 (Fed. Cir. 2006).

[11] *KSR Int'l Co. v. Teleflex Inc.*, 550 U.S. 398, 416 (2007).

[12] *KSR*, 550 U.S. at 419.

[13] *KSR*, 550 U.S. at 401

2. All Elements

32. I understand that, even if a reason to combine prior art references were adequately articulated, the combination of prior art references must disclose every limitation of the claimed invention, in accordance with the Court's interpretations of the claim language, the plain and ordinary meaning of the terms, and/or the parties' agreed upon constructions.

C. Indefiniteness

33. I understand that a patent must conclude with one or more claims particularly pointing out and distinctly claiming the subject matter that the applicant regards as his invention. Counsel for Samsara and Chapco has informed me that claims are indefinite when "read in light of the specification delineating the patent, and the prosecution history," they "fail to inform, with reasonable certainty, those skilled in the art about the scope of the invention."[14] Counsel for Samsara and Chapco has also informed me that even if a claim term's definition can be put into words, the claim is still indefinite if a person of ordinary skill in the art cannot translate the definition into meaningfully precise claim scope.[15]

D. PHOSITA - Power Transmission Technology

34. As stated above, the PHOSITA has a working knowledge of power transmission technology. Power transmission devices are at issue in the asserted patents and are also components of many different machines. Common mechanical power transmission elements are listed in resources publicly provided by the Federal Government[16] and reference manuals, among other sources. These machine elements include:

- Flywheels
- Friction clutches
- Sprag clutches
- Wheels
- Bearings

---

[14] *Nautilus, Inc. v. Biosig Instruments, Inc.*, 134 S.Ct. 2120 (2014).

[15] *Halliburton Energy Servs., Inc. v. M-I LLC*, 514 F.3d 1244 (2008).

[16] For example, see Occupational Safety and Health Administration (OSHA) code 1926.307 or OSHA 1926.219 Mechanical power-transmission apparatus for a list.

- Ratchets and pawls
- Pulleys
- Belts
- Couplings
- Spindles and rollers
- Chains
- Cranks
- Gears
- Connecting rods
- Conveyors

35. Because of their common usages across diverse types of machinery, terminology has been standardized, and their utility and limitations are well understood by a PHOSITA. A PHOSITA recognizes the relative merits of differing components, by virtue of education and/or design experience. The PHOSITA would also understand which components can be used in place of one another; selection of a suitable structure or mechanism may account for other selection factors such as durability, cost, reliability and other considerations that are not performance driven.

VI. DESCRIPTION OF THE PRIOR ART

A. Non-Motorized Treadmills

36. The purpose of any treadmill is to provide a localized surface (or, "running surface") upon which the user (whether human or animal) can exercise or generate power through a simulated act of locomotion, e.g. walking, jogging, running without gross body movement forward, rearward, or to the side relative to the running surface. Treadmills are sufficiently common that safety guidelines specific to their design/function have existed for some time and are standardized. For example, the International Standards Organization ("ISO") and the European Standard Technical Committees ("EN") defined what a treadmill is and set guidelines for the safety devices that should accompany treadmills years in advance of Bayerlein's submission to the USPTO. ISO/EN define a treadmill as "training equipment with a unidirectional moving surface on which a walking or running activity can take place where the feet are free to leave the moving

surface." ISO/EN also state that a treadmill shall be equipped with a handlebar (front, both sides, or both).[17]

37. The asserted Bayerlein patents relate to non-motorized treadmills powered by the efforts of the user of the treadmill, instead of an electric motor or other power source. These treadmills are generally referred to as "self-powered" or "manual."

38. Manual treadmills have existed for hundreds of years, as evidenced, for example, by manual treadmills used by the Romans to power cranes:

[17] ISO 20957-6:2005/EN 957-6:2001

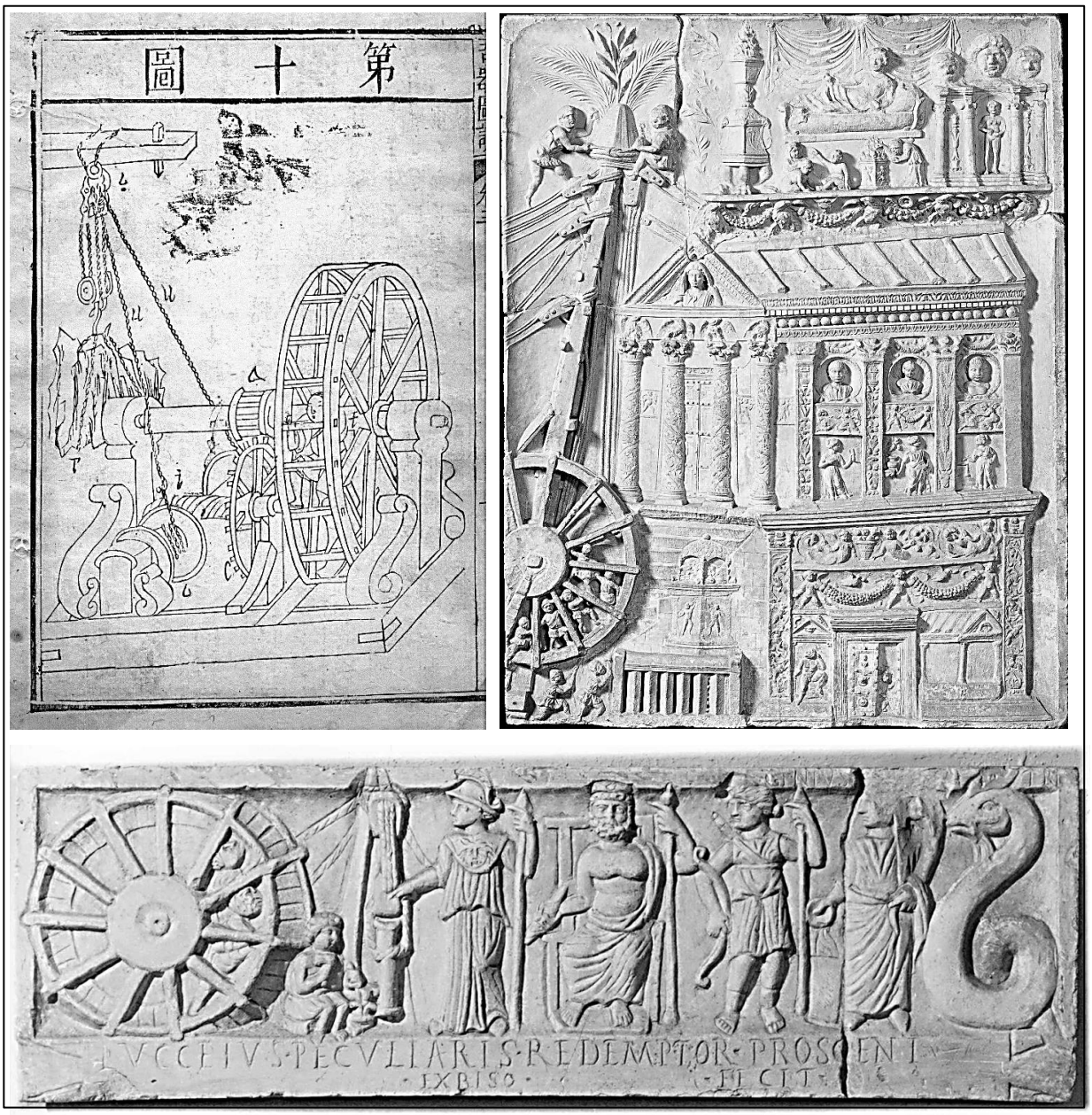

Figure 1. Top Left: "Hoisting machine with treadmill. Illustration from the Qiqi Tushuo, the earliest Chinese monograph on western mechanics (1627, the illustration is taken from the 1830 edition)." Bottom: "Hoisting machine with treadmill. Mould of relief from the Theatre of Capua (Museo della Civià Romana, Rome)." Images and descriptions from the Max Planck Institute.[18] Top Right: relief from the Vatican museum showing humans powering a treadmill crane from the 2nd Century AD.[19]

[18] http://www.mpiwg-berlin.mpg.de/resrep00_01/Jahresbericht_2_2_section.html

[19] http://www.museivaticani.va/content/museivaticani/en/collezioni/musei/museo-gregoriano-profano/Mausoleo-degli-Haterii.html

39. In terms of filings with the USPTO, treadmill art is also well known and includes numerous self-powered treadmill patent applications dating from the 1800's. For example, U.S. Patent 8308X granted to Eli Briggs ("Briggs") in 1834 teaches a non-motorized treadmill for horses.[20] Briggs' Figure 1 (below) depicts a self-powered treadmill with a frame, a continuous belt disposed about a front and rear shaft that are each joined to the frame, the running belt is comprised of transverse slats held together by an endless chain-like structure on each side. Figure 1 of Briggs also clearly shows a curved running surface.[21]

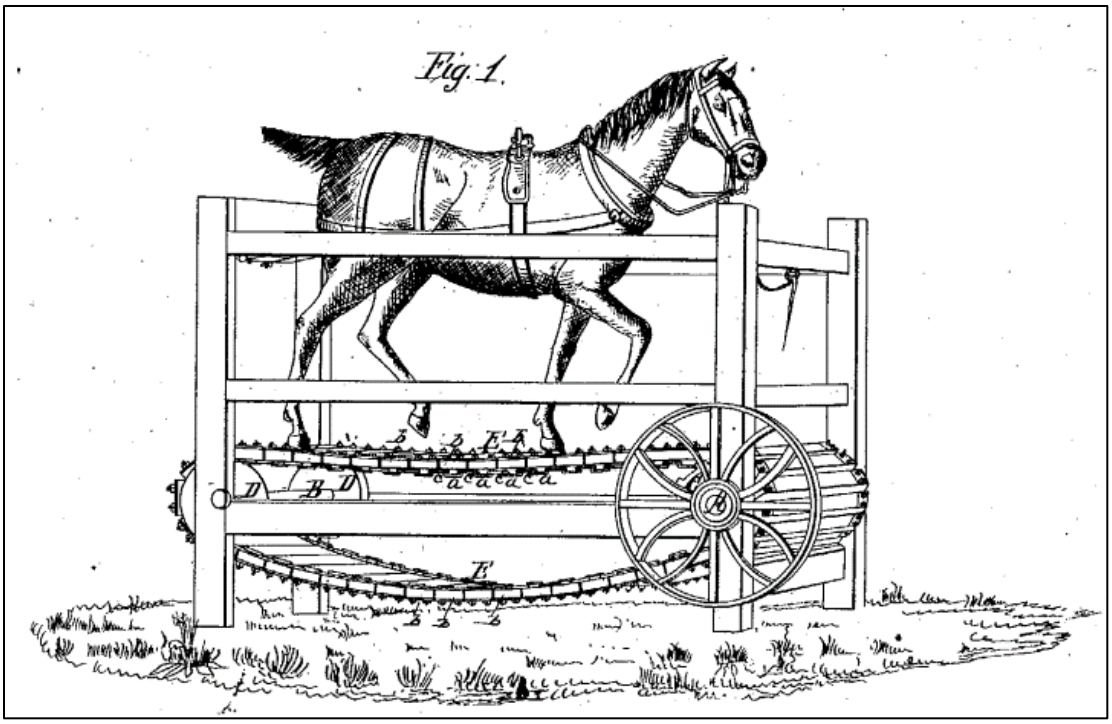

Figure 2. Briggs Figure 1. The curved running surface of the running belt is constructed of a continuous belt disposed over a front and a rear shaft rotatably joined to a frame. The running belt is comprised of laterally extending slats connected by endless belts on each side that are comprised of elements that interact with wheels spaced apart on the front and rear shafts. The running surface has a curved profile. A flywheel is joined to the front shaft.

[20] This patent was not cited during the prosecution of the '169 patent or the '580 patent.

[21] It is my understanding that the specification is not available from the USPTO because it was destroyed in a fire.

40. Two more examples are U.S. Patent No. 411,986, entitled "Animal Tread Power" issued in 1889 to David Frazeur and William Davis ("Frazeur"), and U.S. Patent No. 641,424, issues to Robert Ziebell ("Ziebell") on January 16, 1900, entitled "Animal Power." Neither were before the examiner during the prosecution of the '169 patent or the '580 patent.

41. Frazeur teaches a manual treadmill having a frame and a running surface that includes a running belt constructed of an endless belt comprised of transverse slats. The profile of the running surface corresponds to the top surface of transverse rollers beneath the running belt that are free to roll about a track fixed to the frame. Frazeur includes a device (i.e., a brake) to prevent the running belt from rotating.

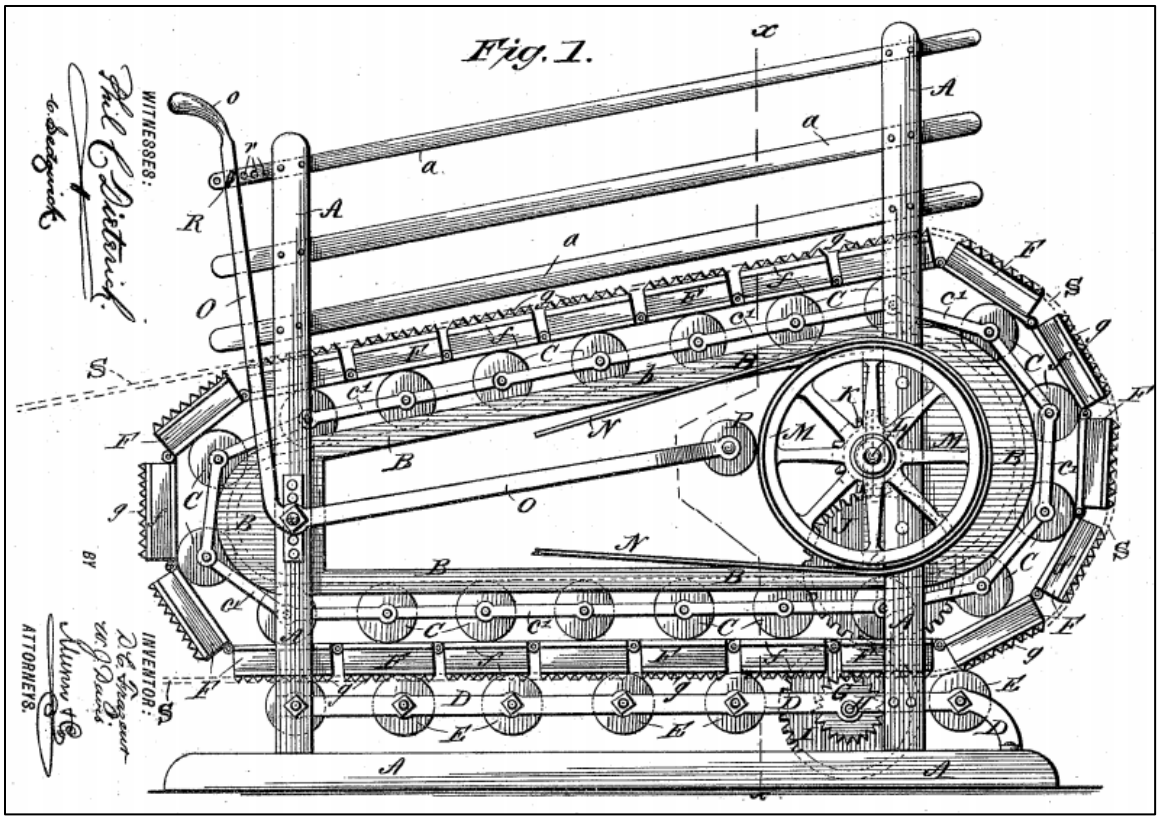

Figure 3. Frazeur Figure 1. The running belt includes a running surface whose profile corresponds to the shape of the plurality of rollers beneath it (C). The plurality of rollers is organized into an endless belt that operates within a track (B) coupled to the frame (A) of the treadmill. Frazeur teaches a handbrake (O) to stop the running belt from rotating through interference with fly wheel (M).

42. Ziebell teaches a treadmill with a frame and a running belt disposed about a front and rear shaft that each are rotatably joined to the frame. The front and rear shafts are part of an assembly that includes front and rear pulleys. Ziebell's running belt is comprised of endless belts and transverse slats. The running surface's profile corresponds to the top profile of bearings. The bearings or "bearing wheels" in Ziebell are rotatably joined to what Ziebell identifies as auxiliary frames on the left and right sides of the treadmill that are attached to, and are distinct from, the main frame which provides structure and support for the treadmill. The auxiliary frame of Ziebell is longitudinally aligned with the front and rear pulleys.

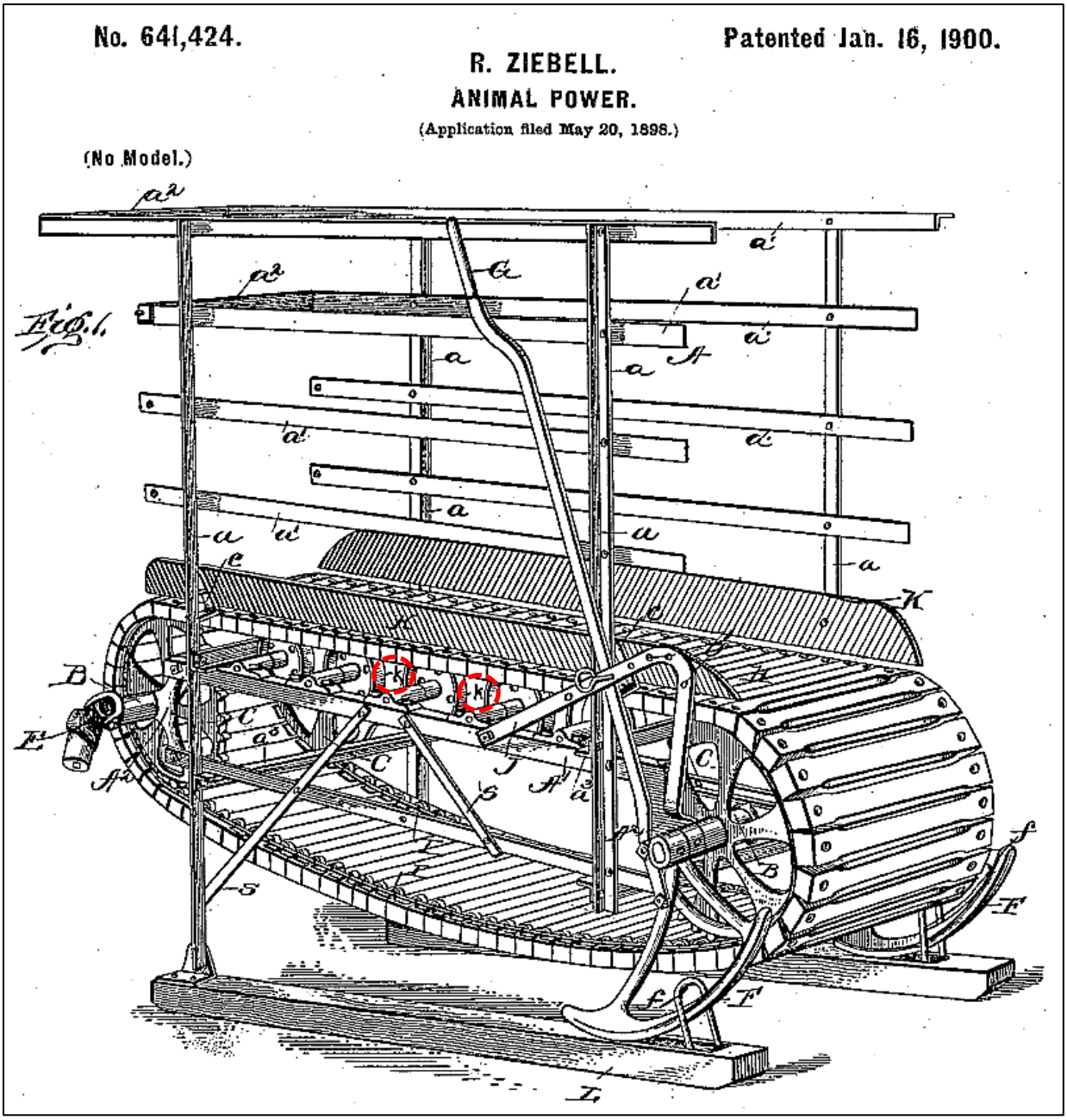

Figure 4. Ziebell Figure 1. The endless belt rests on bearings set in an "auxiliary frame" (A') that is longitudinally oriented to the treadmill on the left and right sides; A' is secondary to the main frame (A). The running belt (H) passes over front and rear wheels (C) mounted on front and rear shafts (B) rotatably attached to the main frame and at least partially support the endless belt. The profile of the running surface corresponds to the top surface of the bearings (k, circled for convenience), that are defined by their arrangement in the auxiliary frame. The auxiliary frame is longitudinally aligned with the front and rear pulleys. Ziebell teaches that a clutch may be connected to the front shaft to facilitate the transmission of the rearward motion of the running belt. The treadmill's incline and corresponding user effort level can be altered.

43. Later filings with the USPTO recognized that the benefits of treadmills are broader than harnessing animal power and include use in exercise. For example, in 1902 a patent application was filed that discloses benefits to animals and humans from treadmill use. This 1902 application matured to a patent granted in 1904 (U.S. Patent No. 767,221) to Hagen for a Training Machine intended for human use that "may be used with equal advantage for the training and exhibition of animals." (Hagen col. 1, 15-17). The Hagen patent was not cited during the prosecution of Bayerlein '169 patent or Bayerlein '580.

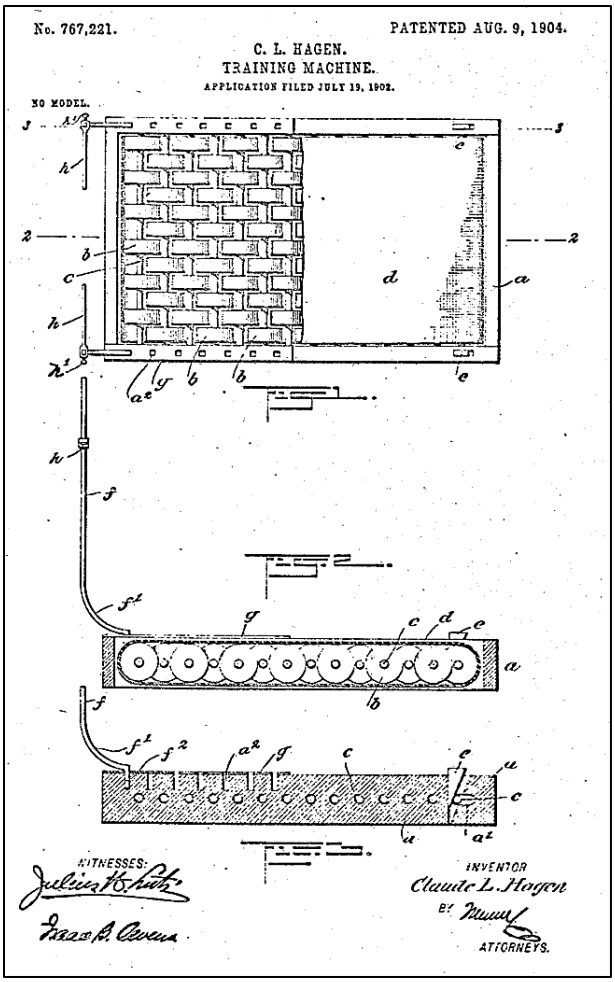

Figure 5. Hagen Figures 1 and 2. Running belt (d) has rollers beneath it. This treadmill has a frame, bearings rotatably coupled to the longitudinal members of the frame, and an endless belt disposed about a front and rear shaft. The top profile of the bearings beneath the endless belt corresponds to the profile of the running surface. Hagen describes his device as one whose physical effect is "exactly the same" as though the user "were running on a planar surface." Hagen does not disclose any powered equipment to drive the device.

44. In that same time frame, the USPTO granted patents covering self-powered exercise treadmills. For example, U.S. Patent No. 759,296 was granted in 1904 to Morairty for a self-powered exercise treadmill. Morairty was not cited during the prosecution of the '169 patent or the '580 patent. Morairty, like Ziebell, recognizes that a self-powered treadmill could allow the user to adjust effort by increasing or decreasing the incline of the running surface. Morairty also recognizes that it is advantageous for a user to be able to change effort levels while using the treadmill. Figure 1 from Morairty shows the running belt disposed about a front and rear shaft, a running surface comprised of an endless belt, and rollers mounted to the frame whose top surface corresponds to the profile of the running surface.

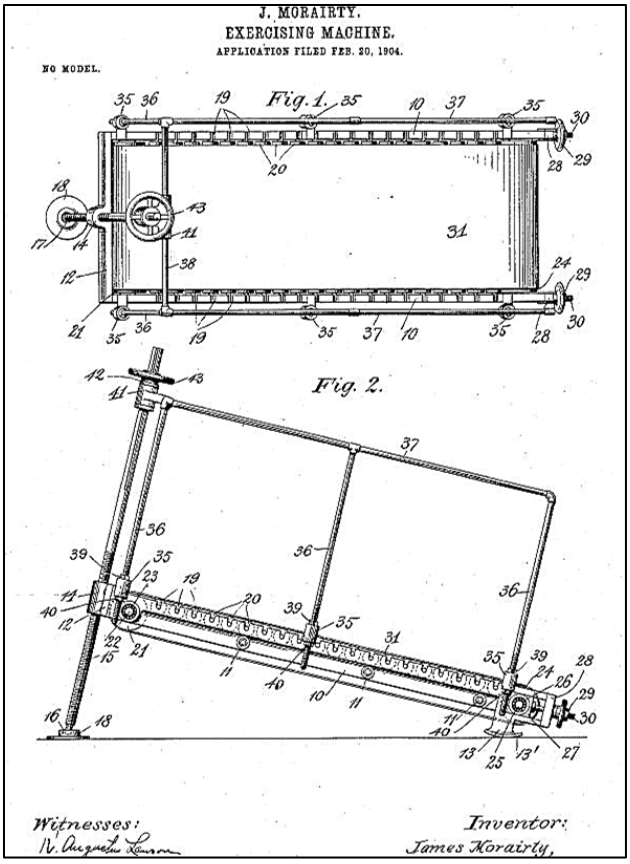

Figure 6. Morairty Figure 1. The running belt is disposed about a front and rear shaft, , rollers mounted to the frame with a top surface that corresponds to the profile of the running surface, and transverse members that join the left and right longitudinal members of the frame together.

45. In 1917, the USPTO granted U.S. Patent No. 1,211,765 to Schmidt for a self-powered "Health Exerciser" treadmill.

46. Schmidt Figures 1, 2, and 3 teach a frame with longitudinal members and a running belt disposed about front and a rear shafts that are rotatably joined to the frame. The longitudinal members in Schmidt are intentionally flexible in nature, to reduce shock to the legs and underlying tissues. (Schmidt, p. 3, col. 1, 27-35).

47. The curved profile of the claimed running surface allows the user to push off of the rear of the treadmill without concern for sliding off and claims that feature as a novel improvement over known treadmill technology. Schmidt describes this claimed novelty over existing treadmill technology as a feature of "considerable merit." (Schmidt, p.2, col. 2, 99-117).

48. Schmidt also discloses that the curved running surface between the front and rear shafts is for ease and efficiency of running. Schmidt teaches that the curvature is patterned after the path of the foot relative to the hip, which negates the nature of the body to bob up and down while running.[22]

49. Schmidt also discloses curved rails[23] to provide a profile for the running belt. The curved running surface's profile is enforced by the weight of the belt, the action of gravity and intentional slack in the running belt.

50. Finally, Schmidt explicitly teaches an option for freely rotating or stationary front and rear shafts, as desired.

---

[22] For example, see Schmidt p. 3, col. 1, 1- 6.

[23] This element, not part of the frame, is referred to in Schmidt as element "d" and it appears on the left and right sides of the Schmidt invention, as shown in Schmidt Figures 2 and 3.

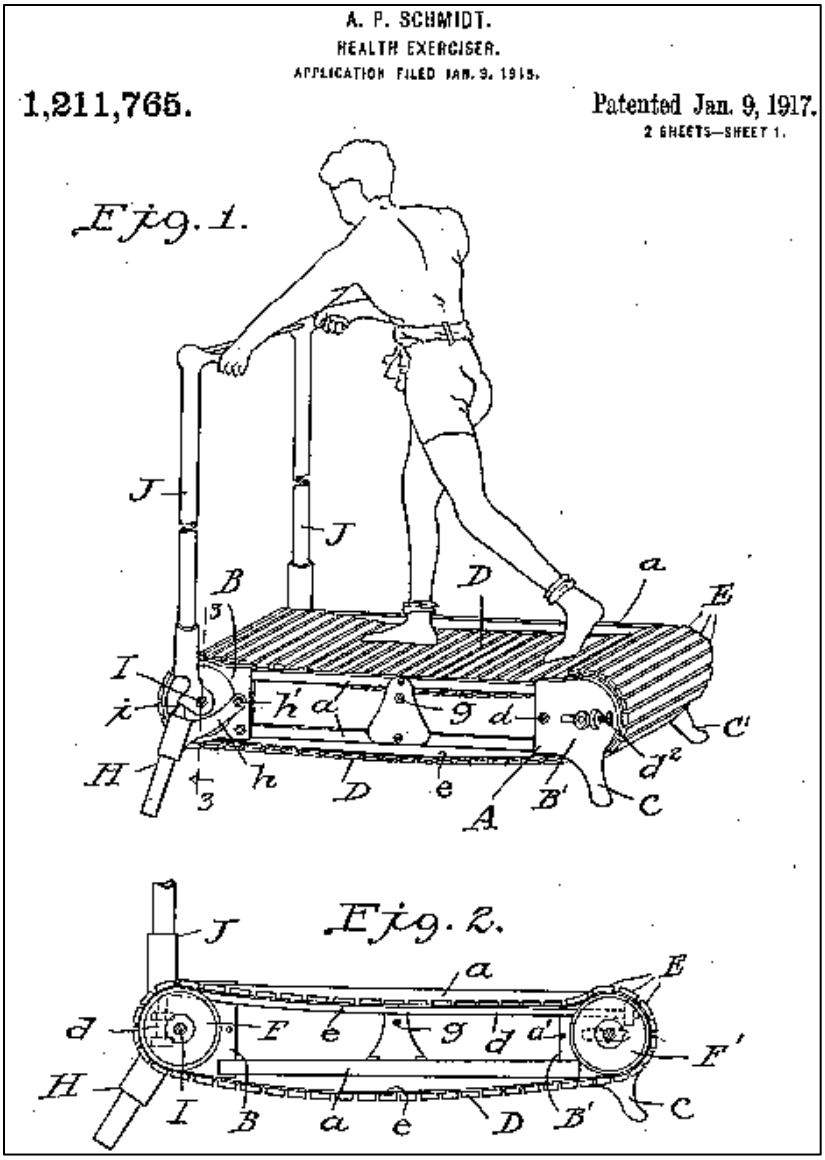

Figure 7. Schmidt Figures 1 and 2. Schmidt teaches a frame (A) with longitudinal members (a) on the left and right, a running belt disposed about front and a rear shafts rotatably joined to the frame, a running surface whose curved profile corresponds to the shape of the rails (d) beneath it. The curved running surface profile is enforced by the shape of the rails, the weight of the endless belt, the action of gravity and intentional slack in the endless belt. Schmidt also teaches an option for the front and rear rollers to be rotatable or stationary, as desired. Schmidt teaches that the curved profile of his running surface provides the ability of the user to push off of the rear of the treadmill without concern for sliding off as a novel improvement over previous treadmill technology.

51. U.S. Patent No. 3,642,279, granted to Cutter in 1972 for a "Treadmill Jogger," discloses a self-powered treadmill with a curved profile.[24] Cutter's curved treadmill solves the problem of restraining the user from running or falling off of the end of the treadmill. (Cutter, col. 1, 8-13). According to Cutter, the existing ways to keep the user from running or falling off of the end included 1) motorize the treadmill, 2) use a harness, or 3) require the use of a handhold (Cutter, col. 1, 13-23).

52. Cutter claims that with a "generally concave" shaped running surface where the front is higher than the rear, there is an advantage in that the position of the user while running becomes regulated by the incline, eliminating the need for motorization, harness, or handhold. (Cutter, col. 1, 54-70).

53. Cutter discloses a frame with longitudinal sides, rollers rotatably joined directly or indirectly to journaling sockets, a running belt (30) disposed about a front and rear shafts, a running surface that is curved and whose profile corresponds to the top edge of the rollers underneath it.

[24] Cutter was disclosed during the prosecution of the '169 patent and '580 patent.

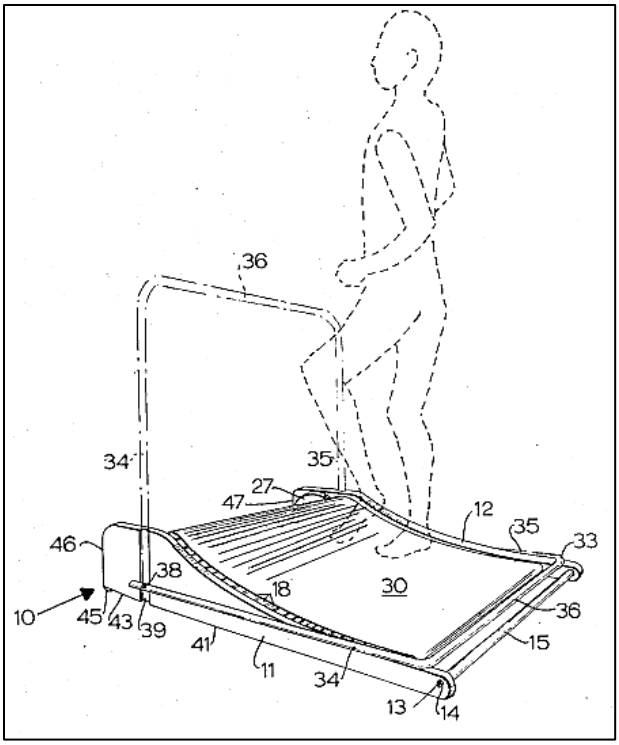

Figure 8. Cutter Figure 1. A self-powered treadmill with curved running surface profile. Cutter's running belt is disposed about a front and rear shaft. The running surface profile corresponds to the shape of the rollers mounted to the frame.

54. In 1972 U.S. Patent No. 3,637,206 was granted to Chickering for "Endless Belt Exerciser With Accelerating and Decelerating Tread Surfaces."[25] Chickering's self-powered exerciser discloses a device without the "necessity of external support means for the user" in order to "accurately simulate the acts of walking, jogging, and running." (Chickering, col. 1, 40-50). To address these needs, Chickering discloses a treadmill with a running surface comprised of a belt, supported by a plurality of rollers. The rollers correspond to the profile of the running surface that has a concave profile. The relative incline of the roller surfaces towards each other allows the user to "push off against the rear surface" (Chickering, col. 2, 65-70), at the end of step. Chickering teaches that roller type supports have so little friction that some other device or mechanism is required because a person exercising on that "type of treadmill is likely to lose his balance because

[25] Chickering was cited by the '169 and '508 patents.

the frictionless surface offers no resistance to the movement of his feet…" (Chickering col. 1, 30-35).

55. Chickering teaches an exercising device comprising a base (a frame) with longitudinal side members, a rail with a plurality of rollers supporting the running belt which is at least partially disposed on front and rear shafts.

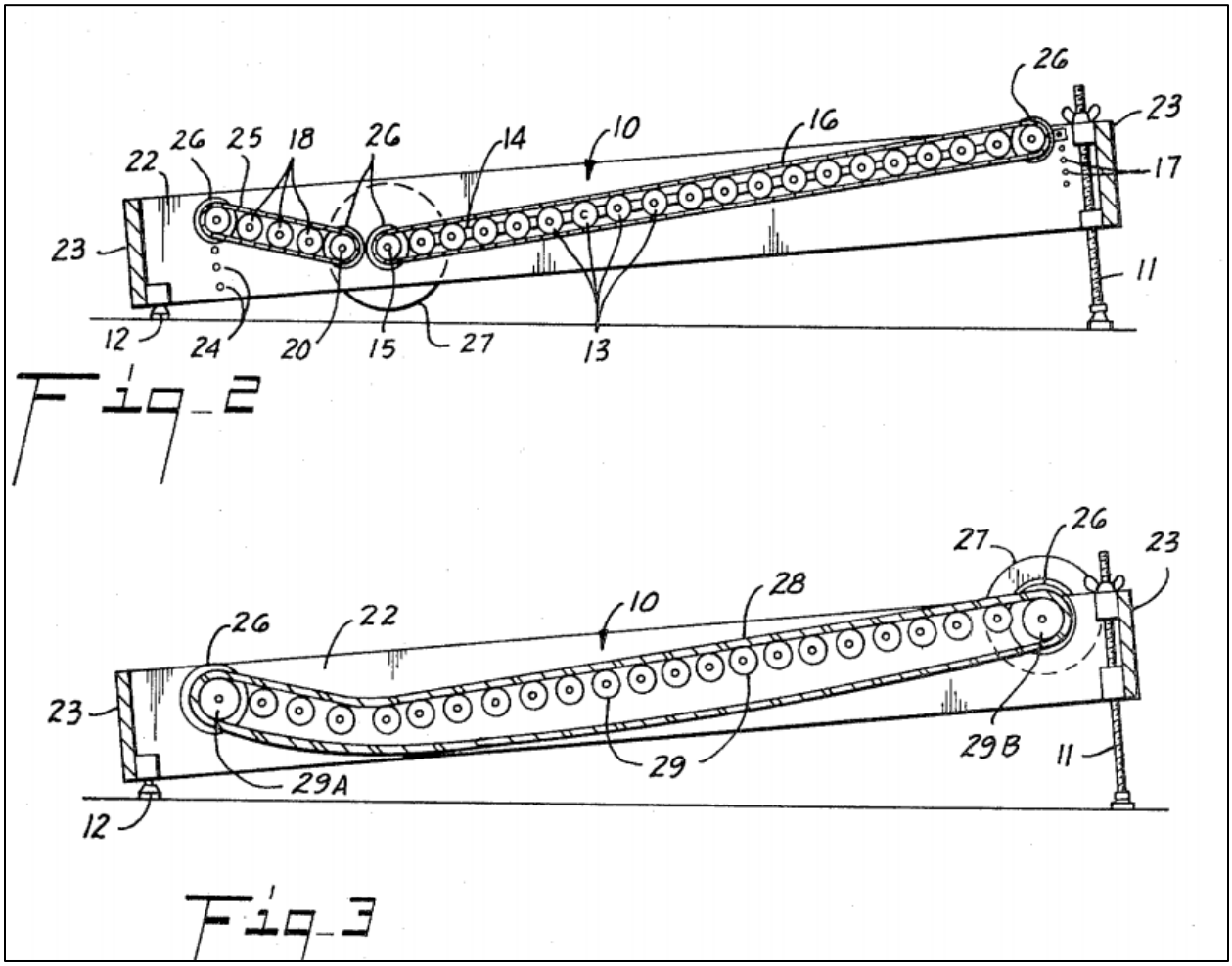

Figure 9: Chickering Figures 2 and 3. A treadmill with a running surface profile that corresponds to the top surface of a plurality of rollers beneath it. The running belt (16, 28) is disposed about front and rear rollers (26; 29B, 29A) that correspond to the shape of the running surface. In one embodiment, the plurality of rollers is rotatably coupled to the bearing rail 14 that is separate from the frame, while in another embodiment the plurality of rollers is housed within longitudinal members (22) of the base (10). Flywheel 27 is present in both embodiments. Figures 2 and 3 show the Chickering feet that appear slightly off vertical in this depiction, but depending on adjustment could be vertical, performing the same function as the feet claimed in the patents in suit.

56. In 1982, the USPTO granted U.S. Patent No. 4,334,676 to Schönenberger. Schönenberger discloses a manually operated treadmill, although this patent also teaches the ability of the invention to be motor driven as well. While the abstract discloses a motorized embodiment, the Schönenberger specification teaches the manual embodiment of the treadmill in at least two places: "…One of the drums 10 is driven by motor 33, or by gravity of earth or by any other suitable motive drive apparatus by means of a drive belt 43." (Schönenberger col. 4, 36-38); and "This invention allows a runner to use the apparatus in a 5% elevation without any external motor power." (Schönenberger col. 6, 15-18). Schönenberger also teaches a plurality of support rollers that are longitudinally aligned with the front and rear shaft and are mounted on "channel rails" that are supported on the frame (Schönenberger col. 5,35-45).

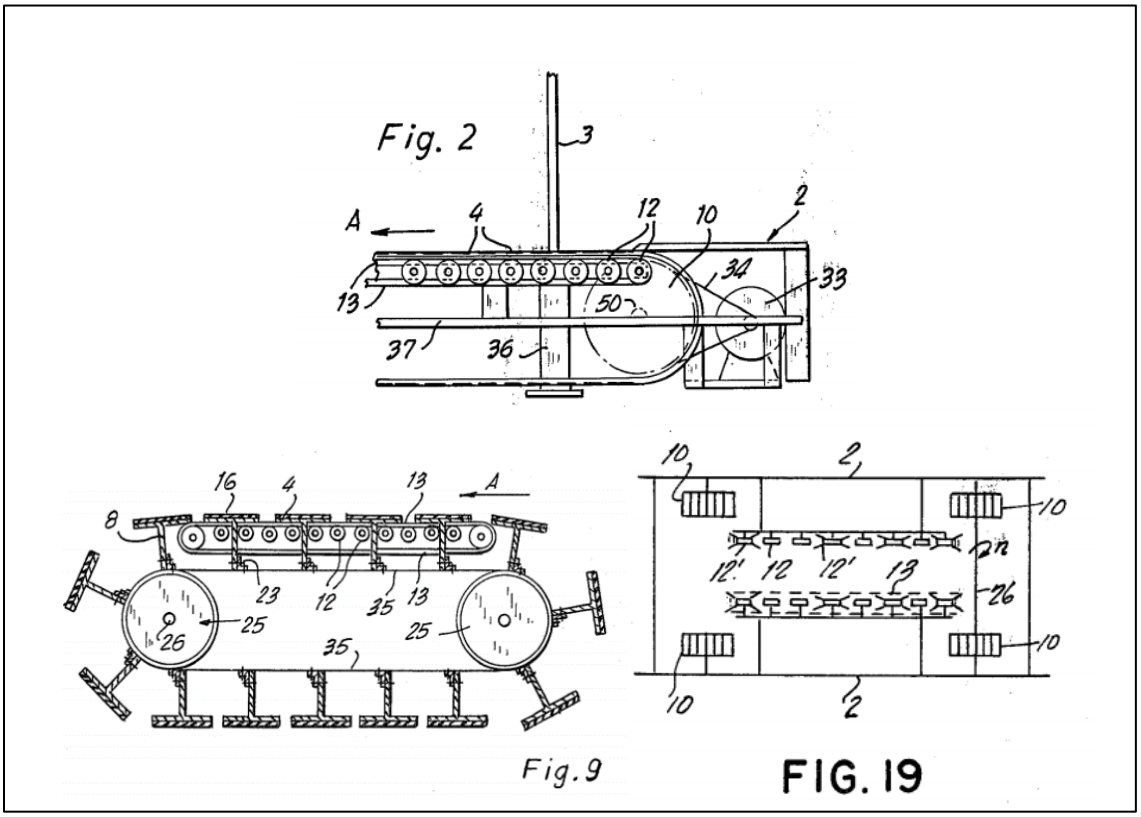

Figure 10: Schönenberger Figure 2, 9, and 19. A treadmill with a running surface profile that corresponds to the top surface of a plurality of rollers (12) beneath it. The running surface is comprised of a running belt (35) disposed about front and rear rollers (10). The plurality of rollers (12) are part of an assembly that is separate from the frame. The running surface profile corresponds to the top profile of the plurality of rollers.

57. In 1983, the USPTO granted U.S. Patent No. 4,389,047 to Hall[26] for treadmills shaped like the ancient Roman style crane treadwheel treadmill devices referenced above, where the user runs on the inside of a generally rigid endless belt, instead of running on the outside of a flexible endless belt.

58. That patent discloses an exercise treadmill where "the surface being run upon is round," so "the force of gravity will act to keep the runner at the bottom of the mill wheel when he is running. This eliminates the need for rails or restraining belts, and makes the rotary device a more comfortable way of running or jogging on an exercise machine." (Hall '047, col. 1, 58-63). In addition, Hall '047 includes a one-way clutch that is used to couple the motion of the treadmill to a generator, similar to the animal power clutch described in Ziebell (Hall '047 abstract; col. 6, 63; Ziebell lines 94-105).

59. Hall '047 also teaches a treadwheel with a minimum diameter of nine feet, or, in other words, the minimum radius of curvature of the running surface is 4 ½ feet. (Hall '047 col. 1, 55-56).

60. In 1997 U.S. Patent No. 5,669,856 was issued to Liu for "Exerciser."[27] Liu discloses a manual treadmill device with two running belts, one for each foot, and each running belt is comprised of an endless belt. The endless belts are disposed over a front and rear shaft. Liu teaches and claims that that the running belts move in only one direction. This feature is achieved by restricting the rotation of the front and rear shafts, around which the running belt is disposed.

---

[26] Bayerlein '169 and '580 cite U.S. Patent Nos. 6,500,097 and 6,740,009 also to Hall, granted in 2002 and 2004, respectively, for manually powered treadmills shaped like the ancient Roman style crane treadwheel treadmills. Hall's '097 patent includes a speedometer element.

[27] This patent was not cited during the prosecution of the '169 patent or the '580 patent.

Specifically, Liu teaches that the front and rear shafts rotate in a single direction. Liu does not limit the method by which the rear roller is permitted to only rotate in one direction.

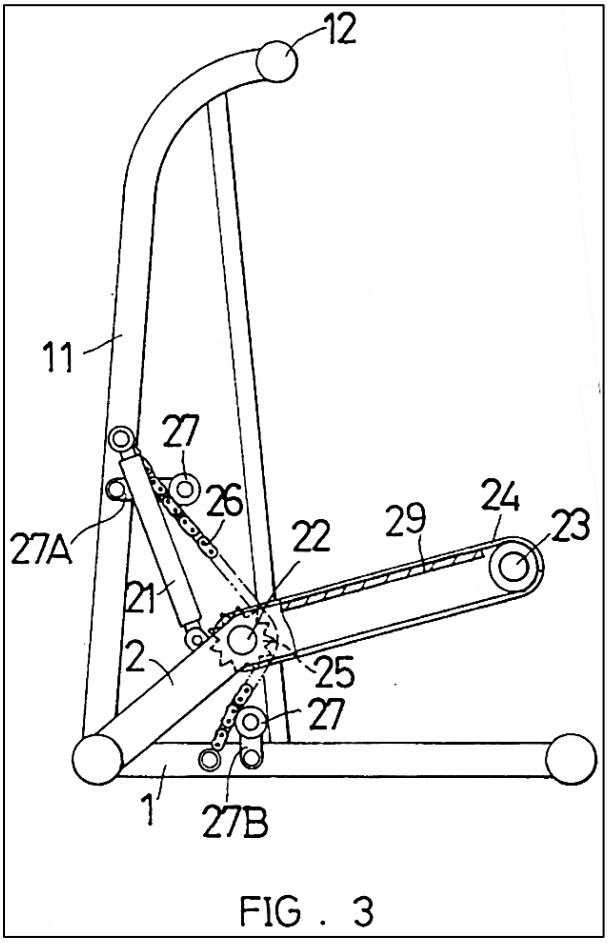

Figure 11. Liu Figure 3. A self-powered running belt (24) is disposed about a front and rear shaft (22 and 23). The running surface profile corresponds to the friction board (29). Liu teaches that shafts 22 and 23 are only permitted to rotate in one direction.

61. In 1998, the USPTO issued U.S. Patent No. 5,709,632 to Socwell. Socwell discloses a self-powered[28] curved deck treadmill on a substantially flat surface that includes a support frame; a front shaft assembly supported by the frame (12) that includes a front shaft (78) and at least one front running belt pulley supported by the front shaft and a rear shaft assembly (86) supported by the frame and comprising: a rear shaft (86). There is at least one front running

[28] Socwell col. 11 25-34

belt pulley supported by the rear shaft; a running belt (16) supported at least in part by the front shaft assembly and the rear shaft assembly; a safety device cooperating with the rear shaft to permit rotation of the rear shaft in only one direction; at least one bearing rail having a plurality of bearings (98) rotatably coupled to the at least one bearing rail (94, 96, 168).

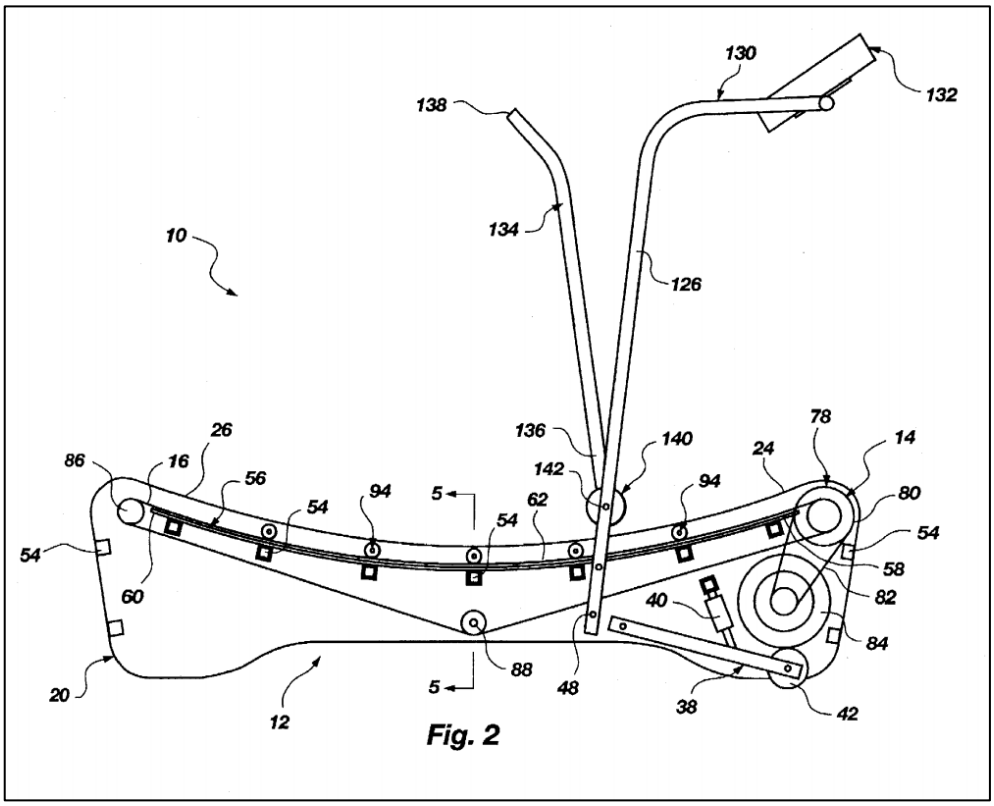

Figure 12. Socwell Figure 2. Socwell has a frame and a running belt disposed about front and rear shafts, whose running surface profile corresponds to the top profile of the bearing rail, partially shown in the figure as 94.

62. In 1995, the USPTO issued U.S. Patent No. 5,411,455 to Haber for "User Propelled Treadmill." Haber teaches a self-propelled treadmill with a running belt disposed about front and rear drums (19 and 20). Haber includes a one way clutch (22) of "conventional design" (Haber col. 3, 22) joined to the front drum. In addition, Haber discloses a control panel that outputs a display of the user performance. Haber includes a flywheel, which it terms an "inertia wheel."

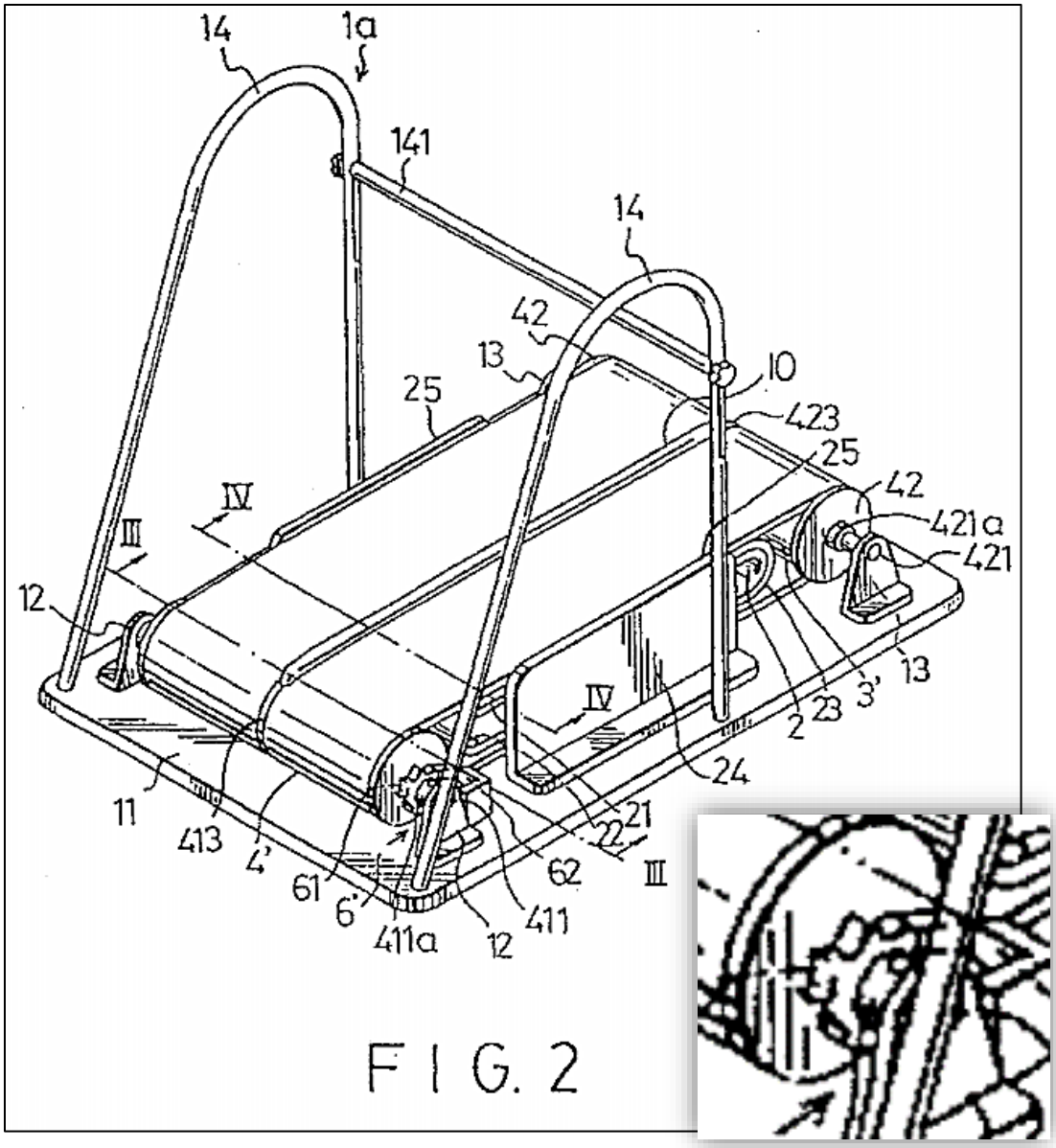

Figure 13. Magid Figure 2. Magid teaches a manual treadmill. Magid teaches a running belt comprised of a continuous belt disposed around a front and rear shaft. The front and rear shafts are rotatably joined directly or indirectly to a frame/base. Rollers between the front shaft and rear shaft are rotatably joined directly or indirectly to longitudinal members attached to the frame/base. Magid teaches a ratchet and pawl "unidirectional control mechanism" (Magid col. 4, 47-49) that restricts the running belts of the treadmill to movement in a single direction of travel. In the figure here, the ratchets and pawls are adjoined to the rear shafts based on the orientation of the handrails (14). Note that the Magid patent identifies part 411 as the front roller on the "front" of the device and 421 as the rear roller on the "rear" of the device. Magid's front/rear lexicography is opposite of the interpretation of the examiner who examined Bayerlein in view of Magid. The usual construction adopted by the prior art and the Bayerlein patents identify the "back" of the treadmill the side posterior to the user operating it. Magid's inverted lexicon is clear based on an inspection of the depiction of the ratchet gear (inset) and the orientation of the handlebars. See Magid col. 4, 34-40, Fig. 9.

63. In 1996, the USPTO issued U.S. Patent No. 5,538,489 to Magid, entitled "Walker Apparatus With Left And Right Foot Belts." Magid was before the examiner for the Bayerlein '169 and '580 patents. The Magid patent teaches an exercise device with independent running belts for the left and right foot. According to the specification, the device provides a means for walking exercise or training for individuals (such as the elderly, infants, or the disabled) whose foot movements may not be coordinated entirely and thus would have difficulty using a classically designed treadmill (Magid col. 1, 53-59).

64. Magid teaches a "unidirectional control" mechanism designed to "permit only unidirectional movement of the left and right foot belts." This mechanism "includes a pair of ratchet gears attached to outer ends of the front rollers[29] and mounted rotatably on the first shaft, and a pair of pawls secured to the base and engaging one of the ratchet gears to permit only unidirectional rotation of the front rollers, thereby preventing bidirectional movement of the foot belts."

65. Magid has "…a functional support frame, said base having front left and right sides, a pair of spaced front brackets disposed adjacent to said front left and right sides, a first shaft extending from said front left side to said front right side, said first shaft having two ends fixed respectively at said front brackets, rear left and right sides… and a second shaft extending from said rear left side to said rear right side." Additionally, Magid teaches "…a pair of front rollers mounted rotatably on said first shaft and disposed respectively on said front left and right sides; a pair of rear rollers mounted rotatably on said second shaft and disposed respectively on said rear left and right sides; endless left and right foot belts, each of which engage a respective one of said front rollers and a respective one of said rear rollers." Finally, Magid teaches the unidirectional control mechanism "wherein each of said front rollers includes an outer end with a ratchet gear

[29] "Front" in Magid's treadmill lexicon is the rear or back side in Bayerlein. This nuance of Magid's lexicon appears to have been overlooked by the examiner and Mr. Oblamski.

attached thereto, and said base further includes a pair of pawls which releasably and respectively engage said ratchet gears on said front rollers."

66. In 2000, the USPTO issued U. S. Patent No. 6,042,514 to Abelbeck, entitled "Moving Curface Exercise Device." Although Abelbeck includes references to a motor as a drive means, the focus of the invention is reduction in cost, and it also discloses a treadmill that includes a continuous segmented track (23) whose individual deck members (22) are supported by wheels or ball bearing "support members" (36) that can be operated using body weight (col. 10, 9-13) and are supported by side frames (38).

67. In 2000, the USPTO issued U.S. Patent No. 6,053,848 to Eschenbach, entitled "Treadmill Deck Suspension." Eschenbach teaches a curved, self-powered treadmill. This patent teaches a running surface comprised of an endless belt trained abut a first and second roller assembly (26, 28; or 60, 62). (Eschenbach col. 2, 18-24). Support for the running surface is provided by a flexible linking. (Eschenbach col. 2, 25-30).

68. In 2006, Pasqualin filed U.S. Patent Application 2006/0287165, entitled "Muscle-Powered Vehicle." Pasqualin discloses a manually operated treadmill supported by a chassis (18). The treadmill (11) is constituted by two rollers, a first front roller (13), relative to the travel direction of the vehicle, and a second rear roller (14). The two rollers 13 and 14 are surrounded by a continuous belt (15), which is stretched between the rollers. An upper portion 15a of the belt 15 slides over a supporting surface 16 for the user 12, who walks or runs thereon. The belt 15 transmits its motion, imparted by the thrust of the feet of the user 12, to the two front and rear rollers 13 and 14.

B. The Asserted Patents

1. U.S. Patent No. 8,986,169 ("Bayerlein '169")

69. I have reviewed the '169 Bayerlein patent and the specific claims asserted (11, 12, 13, 14, 15, and 16). In general, the 169' patent describes manually operated treadmills having

front shaft rotatably coupled to the treadmill and a rear shaft rotatably coupled to the treadmill frame at the rear end. The treadmills also have a rear shaft unidirectional device permitting rotation of the rear shaft in only one direction. Additionally, the running belt includes a curved running surface upon which a user of the treadmill may run, configured to allow the user to manually control the speed of the running belt and to facilitate maintenance of a contour." (Bayerlein '169 col. 2. 5-25).

70. All of the asserted claims in the Bayerlein '169 require a manually operated treadmill having a frame, a front shaft assembly supported by the frame, a rear shaft assembly supported by the frame, and a bearing rail, among other limitations. According to Bayerlein, a number of different support types may be used to shape the profile of the running surface for several advantageous benefits (e.g. a track, see Fig. 18). In claim 11 Bayerlein describes using a plurality of bearings at various elevations to provide a desired shape to the profile of the running surface (Bayerlein '169 col. 34 lines 13-23). Thus, the upper point of the bearing forms the desired contour.

71. This is consistent with the Court's claim construction: "the running surface substantially corresponds to the shape of the top profile of the rail with bearings." Claim Construction Ruling, p. 9. The profile of the running surface is enforced by gravity and slack in the running belt. (Bayerlein '169, col. 13, 50-58; col. 34, 13-22). Following the claim construction process, and consistent with the asserted patents' specifications and claims, the frame and the bearing rail are separate elements.[30]

72. The bearing rail, whose top surface corresponds to the desired contour to the running surface, must be fixed relative to the running surface to perform this function. One way to fix the bearing rail is to attach it to a frame, a separate structure that provides the geometry and load support for the entire structure. (See Claim Construction Ruling, p. 7).

[30] "As conceded by Woodway, the bearing rails are 'elements separate and distinct from the treadmill frame.'"

73. Bayerlein '169 teaches that it is advantageous for safety to constrain the rear shaft to rotate in only one direction (Bayerlein '169 col. 26, 65-67; col. 27, 1-6); a PHOSITA understands that this result could be accomplished several ways, and restricting belt rotation to one direction through the use of standard power transmission components is well known. Liu (above) recognized the safety and utility in constraining a running belt in this way in manual exercise equipment in 1997. Other prior art inventions cite unidirectional elements such as a ratchet and pawl, e.g., Magid. Exchanging different components to achieve the same results is nothing more than a predictable variation, and there is nothing novel in recognizing the benefit of directional control of a shaft in an endless belt exercise device because the art of unidirectional control is well known and includes a number of viable options. [31]

74. The claims of the '169 patent that require a unidirectional device joined to the rear shaft (exclusively), even though the specification teaches a unidirectional device joined to either the front or rear shaft. The prosecution history reflects that during prosecution, the applicant represented that it is an improvement over Magid to place the safety device on the rear shaft, an argument the examiner accepted in the context of that application.

75. However, Magid does not teach a "front" shaft mounted unidirectional device in the treadmill embodiment. To the contrary, the image from Magid above reflects otherwise.[32] In addition, the Liu patent teaches front and rear unidirectional front and rear shafts/rollers. Put

[31] See, for example, Liu, Magid, Hall, the Power Transmission Handbook or any standard material handling reference.

[32] Figure 2 and Figure 9 of Magid depicting the treadmill embodiment show the ratchet and pawl mechanism on the rear shaft when considered in the lexicon of Bayerlein. In contrast, Magid's stroller embodiment depicts a front mounted ratchet and pawl.

simply, making the design change to move the unidirectional device to the rear shaft, or to the front shaft, is not novel.

76. Bayerlein's other asserted claims include the following limitations: the bearing rail longitudinally extends along the frame and is longitudinally aligned with the pulley element of the front and rear shaft assemblies; the running belt is comprised of an endless belt that is comprised of a plurality of lateral slats and other endless belts.

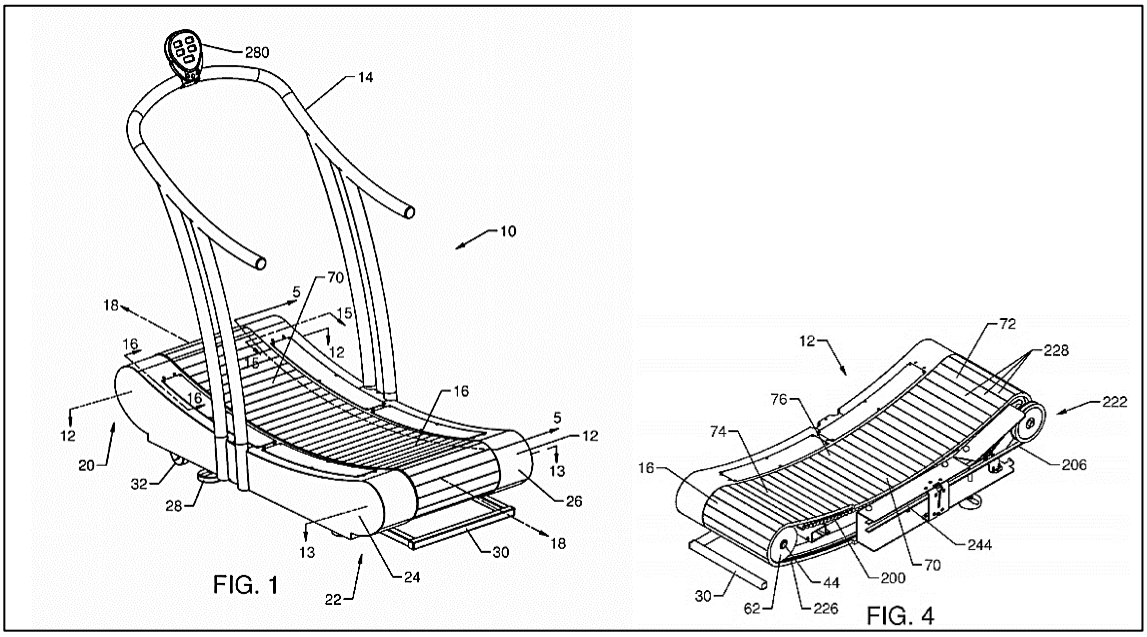

Figure 14. Bayerlein's '169 Figures 1 and 4.

77. Bayerlein '169 recognizes that other treadmills use motorized running belts to maintain the user in a somewhat constant location relative to the running surface while manual treadmills have to find a similar force from something other than a motor. (Bayerlein '169, col. 1, 60 – col. 2, 2). Bayerlein '169 teaches that the curved profile of '169's running surface provides the ability for a user to walk or run, by the action of gravitational force upon weight of the user's body to keep the user in the somewhat constant location relative to the running surface. This is due to the user's foot interacting with the running belt relative to the lowest point of the running belt, causing rotation of the running belt.

78. Bayerlein '169 teaches a definition of the running surface's profile, substantially speaking, to be set by a radius of curvature greater than five feet, within Hall's prior art teaching of a profile having a radius of curvature greater than 4 ½ feet. No asserted claims include a limitation relating to specific curvature of the running surface.

79. Bayerlein '169 also identifies that without slack, the running belt and therefore running surface would not take the shape of the structure beneath it. (Bayerlein '169, col. 13, 50-58). Bayerlein '169 teaches that the weight of the running belt acts in conjunction with the length of the endless belt and the distance between the front and rear pulleys to maintain the curved running surface shape. Bayerlein also allows for the use of a fore-aft shaft synchronizing system to enforce a differential in running surface speed between the front and rear of the running belt to create slack in what would otherwise default to a taught belt system.

2. U.S. Patent No. 9,039,580 ("Bayerlein '580")

80. I have reviewed the asserted claims for the self-powered treadmill taught by Bayerlein '580 (1, 4, 5, 6, 10, 11, 12, 13, 14, 18, 19, 20, and 25), which is a continuation of the '169 and has the same specification. Bayerlein '580 describes manually operated treadmills having a treadmill with a front shaft rotatably coupled to the treadmill and a rear shaft rotatably coupled to the treadmill frame at the rear end. The treadmill also has a safety device permitting rotation of the shaft in only one direction. Additionally, the running belt includes a curved running surface upon which a user of the treadmill may run, configured to allow the user to manually control the speed of the running belt and to facilitate maintenance of a contour of the running belt. The '580 patent does include some other limitations in addition to those asserted from the '169, including adjustable feet(see, for example Claims 19 and 20).

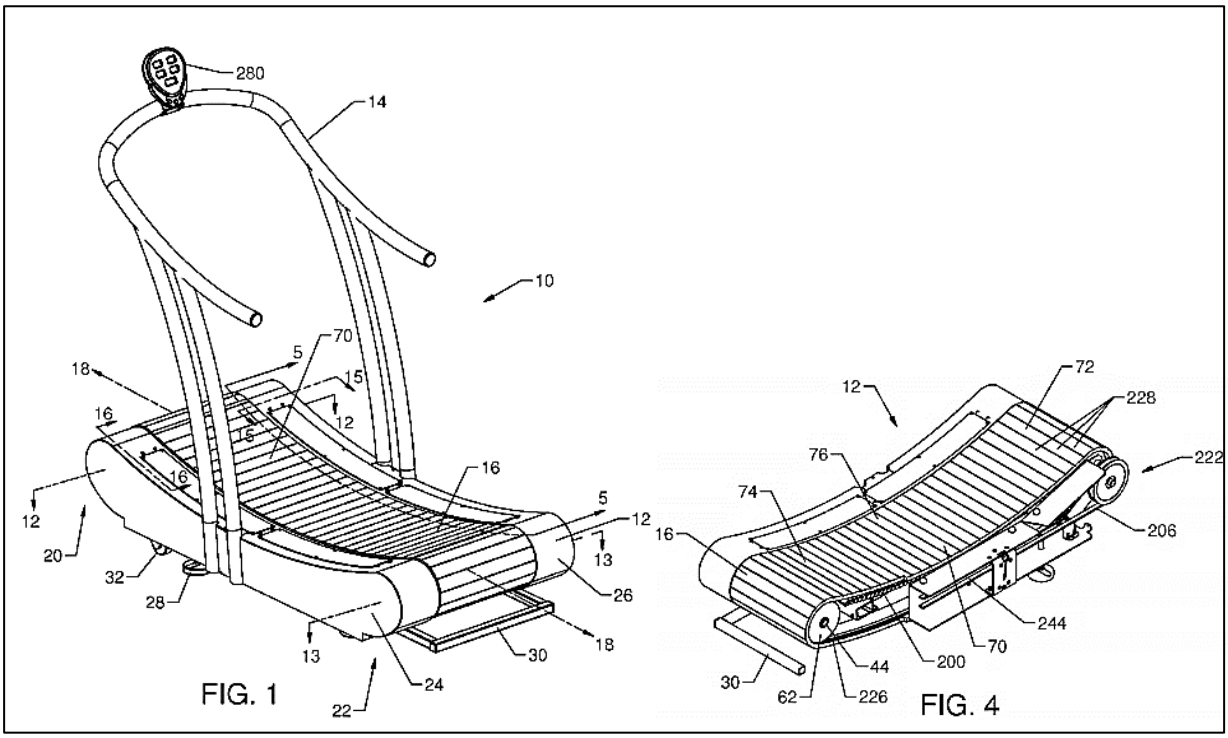

Figure 15. Bayerlein '580 Figures 1 and 4.

81. Consistent with the prior art, Bayerlein '580 recognizes that other treadmills use the force of motorized running belts to maintain the user in a somewhat constant location while manual treadmills have to find a similar force from something other than a motor. Bayerlein '580 notes that motorized treadmill belts must overcome "significant" sources of friction and later on teaches a secondary idler pulley mechanism to increase the Bayerlein '580 running belt's friction (Bayerlein '580, col. 1, 56-60; col. 21, 19-22). Bayerlein '580 teaches that the curved profile of the running surface provides the ability of a user the ability to walk or run, by the action of gravitational force upon weight of the user's body. This is due to the user's foot interacting with the running belt relative to the lowest point of the running belt; causing rotation of the running belt[33] (Bayerlein '580, col. 1, 58-62) consistent with the prior art.

82. Bayerlein states that the curvature of the running surface, substantially speaking, may be defined by more or less than three portions, leaving the mathematical description (a

[33] The user "may walk or run, wherein gravitational force acting upon weight of the user's body on the running belt relative to the lowest point of the running belt causes rotation of the running belt, front shaft, and the rear shaft without the aid of a motor."

"polynomial" between orders 1 and 4) of the running surface profile open to an unlimited collection of any straight or curved shape. Bayerlein also allows a definition of the running surface's profile, substantially speaking, to be set by a radius of curvature greater than five feet. Bayerlein describes potential lengths of a treadmill from 10 feet to 25 feet. A PHOSITA understands that if human user ran at the front of a 25-foot treadmill, there would be no difference detected between Cutter and either asserted patent.

83. Bayerlein '580 also identifies that without slack, the running belt and therefore running surface would not take the shape of the secondary support structure beneath it. Bayerlein '580 teaches that the weight of the running belt acts in conjunction with the length of the endless belt and the distance between the front and rear pulleys. Bayerlein '580 also allows for the use of a fore-aft shaft synchronizing system to enforce a differential in running surface speed between the front and rear of the running belt during usage that would create slack in the endless belt that is between the front and rear shaft but is otherwise taught.

84. In addition, Bayerlein '580 equates the use of a shaft assembly and pulleys with a roller to perform the same function (Bayerlein '580, col. 21, 54-63)[34]. Furthermore, the same portion also teaches that any number of pulleys may be used. In summary, Bayerlein '580 teaches that there is no difference between a roller and a plurality of pulleys in performing the function required of those components in the front and rear shaft assemblies.

85. Bayerlein '580 permits a track system instead of a front and rear shaft assembly or bearing rails. This embodiment teaches that the running belt profile is defined by the track and implemented with a "plurality of roller or wheel assemblies" (Bayerlein '580, col. 22, 20-67). Viewed in light of the equivalence between pulleys (wheels) and rollers as noted in the previous paragraph, a PHOSITA would readily understand the use of a single track with rollers instead of two tracks each having with bearings since bearings and pulleys function the same.

[34] "In the exemplary embodiment shown, the one or more front running belt pulleys is shown as a single, front running belt pulley 604 that is substantially a large roller…. According to other exemplary embodiments, any multiple of running pulleys may be used at one or both of the front end and the rear end, such as front running belt pulleys 62."

VII. COMPARISON OF THE PRIOR ART TO THE ASSERTED CLAIMS

86. As set forth above, Woodway asserts claims 11, 12, 12, 13, 14, 15, 16 of '169 Bayerlein and claims 1, 4, 5, 6, 10, 11, 12, 13, 14, 18, 19, 20, and 25 of '580 Bayerlein.

87. Each asserted independent claim generally includes the limitations of (a) curved running surface; (b) frame; (c) front shaft and rear shaft; (d) at least one bearing rail having a plurality of bearings, a running belt supported by the bearing rail and at least partially disposed about the front and rear shafts; and (e) a device to ensure unidirectional movement of the belt. (E.g., claim 11 of the '169 patent; claims 1, 11, and 19.[35] None of these limitations is novel over the prior art alone or in combination.[36]

A. Curved manual treadmills

88. As is apparent from the face of the asserted patents Woodway does not claim to have invented a manual treadmill with a curved running surface. See, e.g., '169 patent, p. 2 (citing, among others, Chickering, Cutter, Schonenberger, Socwell (Fig. 1. depicted below, left), Schmidt (Fig. 1. depicted below, right). As already discussed, manual treadmills with a curved running surface pre-date both patents in suit:

[35] There are other additional limitations in dependent claims discussed further herein.

[36] This Report incorporates by reference Plaintiffs' Invalidity Contentions and the exhibits thereto.

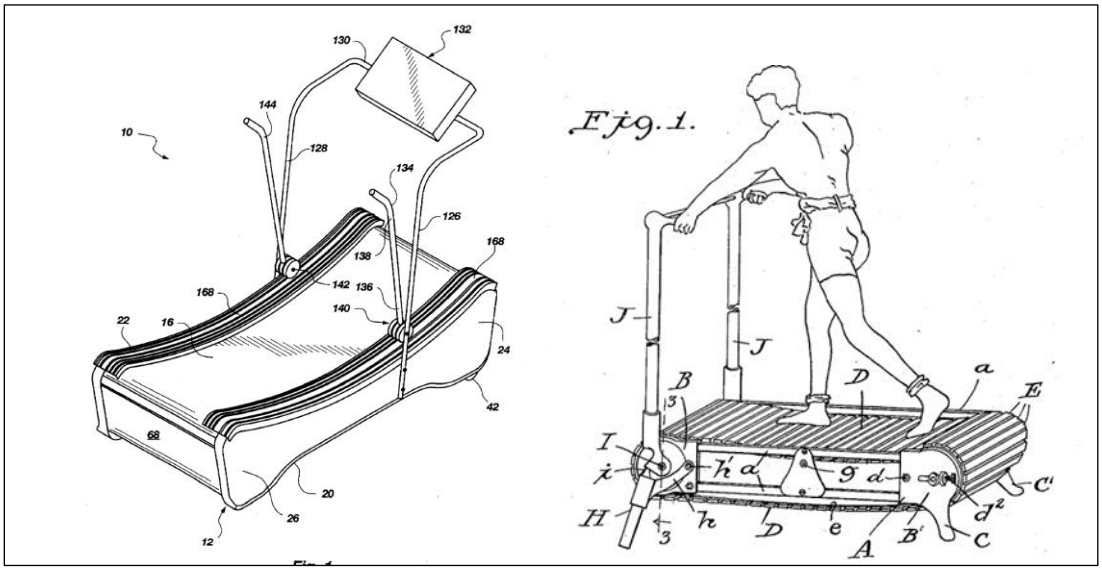

Figure 16. Figures from Socwell and Schmidt (left and right, respectively)

B. Frame that provides structure and support for the treadmill

89. Woodway also did not invent a manual treadmill with a curved running surface that includes a frame for support. As part of claim construction, the Court determined that the term "frame" should be given its plain and ordinary meaning in light of the specification, which states that the frame "provid[es] structure and support for the treadmill."[37]

90. As described above, there are numerous prior art manual treadmills (with curved running surface and/or straight running surface profiles) that include a frame to provide structure and support for the treadmill. For example, Schönenberger (Fig. 2.) includes a frame "which provides for physical and structural support" using frame members (37) in any suitable profile (Schönenberger col. 4, 12-15):

[37] Claim Construction Ruling, p. 5-7.

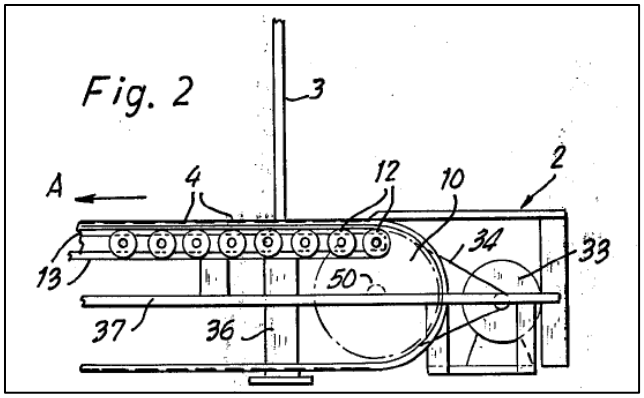

Figure 17. Figure 2 from Schönenberger

91. Schmidt discloses a curved running surface and a frame to provide structure and support for the treadmill (part A), which it describes as a "framework" that is "preferably provided with suitable supporting means" (Schmidt col. 1, 60-63, 75-76).

92. Cutter discloses a curved running surface and a frame as part of claim 1, which claims "a rigid frame having a pair of rigid frame members" as depicted in Fig. 1; a PHOSITA understands that rigid frame to provide structure and support for the treadmill:

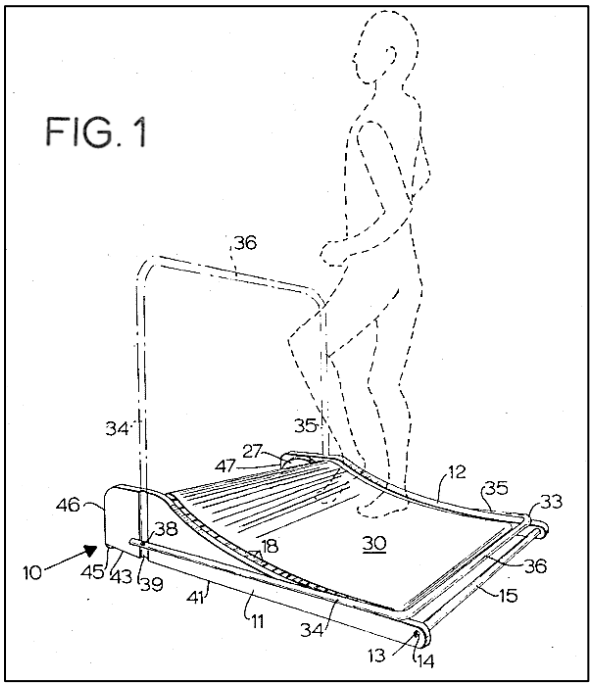

Figure 18. Figure 1 from Cutter.

93. Chickering discloses a treadmill whose running surface profile is not straight that includes a base (10) "which comprises an inclined rectangular frame" (Chickering col. 1, 65-68) made of any suitable material, including wood or metal as shown in the figure below:

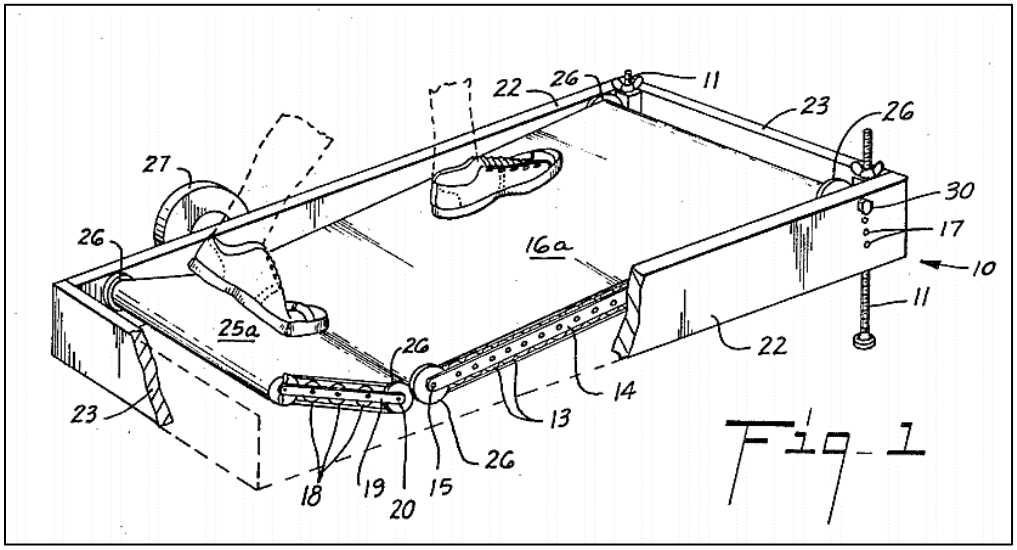

Figure 19. Figure 1 from Chickering.

94. Socwell discloses a support frame (part 12) with a first side and a second side for a "curved deck treadmill" (Socwell col. 4, 61-6 as shown in Figures 1 and 2):

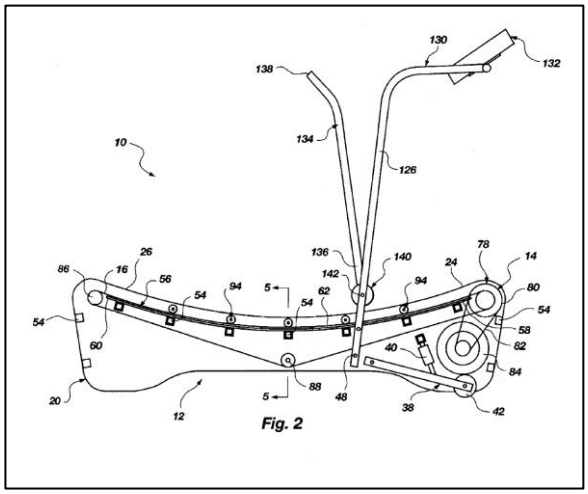

Figure 20. Figure 2 from Socwell.

95. Pasqualin discloses a leg powered device supported by a frame described as a "chassis," i.e., part 18, which a PHOSITA understands provides structure and support for the device (e.g., 0024), shown in Fig. 2.

96. Frazeur discloses a leg powered treadmill that includes "the machine frame A [which] consists of suitable side sills and uprights connected by cross-bars in a substantial structure adapted to support the operating parts." (Frazeur col. 1, 34-38).

97. Ziebell discloses and claims a leg powered treadmill that includes "the main frame [A] … is constructed of any suitable material, preferably of bar-steel and comprises vertical uprights or supports…" (Ziebell col. 1, 34-37, claim 1).

98. Abelbeck discloses a treadmill that can be operated using body weight (Abelbeck col. 10, 9-13) and that includes a frame (part 38) that supports "support members" that include an upper race and a lower race (col. 6, 48-51) as shown in Figs. 2 and 3.

99. Eschenbach discloses a treadmill with a curved running surface that includes a frame with first and second roller assemblies rotatably mounted on the frame, and an endless belt trained about the first and second roller assemblies. (Eschenbach col. 2, 17-20).

C. Front and Rear Shafts

100. As described above¸ there also are numerous prior art manual treadmills (with curved running surfaces and/or linear running surfaces) that include a front shaft and a rear shaft joined to the frame at each end.

101. For example, Schönenberger (see Figs. 3, 12) discloses a front shaft and a rear shaft coupled to the frame: "At either end of the apparatus (see FIGS. 3 and 12), and within the housing 2 are located rotatable drums, rollers, sheaves, sprockets, or the like, about which the surface 1, which is an endless loop, is placed. The rotatable elements, preferably in the form of two operating drums or rollers 10, are suitably journalled in the frame as seen at 50, FIG. 3." (Schönenberger, col. 4, 12-23).

102. Schmidt (Figs. 1 and 2) discloses a front shaft and a rear shaft coupled to the frame:

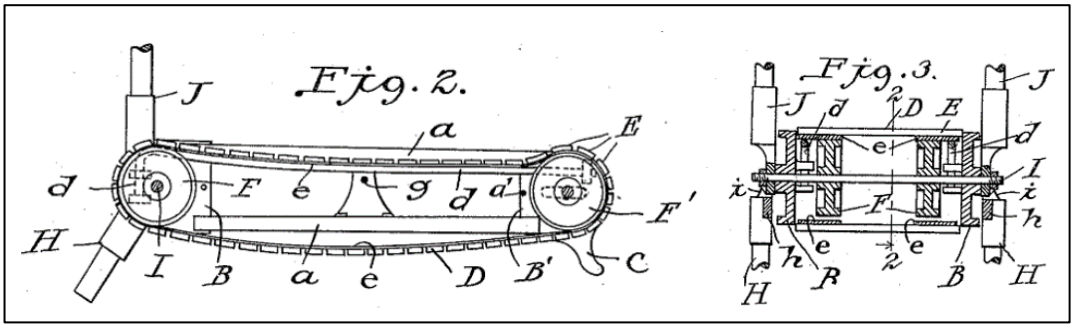

Figure 21. Figures 2, 3, from Schmidt.

103. Cutter discloses a front shaft (25) and a rear shaft (20) coupled to the frame at each end. (Cutter, col. 3, 1-6, 8-11).

104. Chickering discloses a front shaft and a rear shaft (29a, b) coupled to the frame (Fig. 3).

105. Socwell discloses a front shaft (78) and a rear shaft (86) coupled to the frame (12) at each end. (Socwell, col. 5, 4-12).

106. Pasqualin discloses a front shaft (13) and a rear shaft (14) coupled to the frame: "The treadmill 11 is constituted by two rollers, a first front roller 13, relative to the travel direction of the vehicle, and a second rear roller 14. The two rollers 13 and 14 are surrounded by a walkable belt 15, which is stretched between the rollers… the two rollers 13 and 14 and the supporting surface 16 are supported by the chassis 18." (Pasqualin, [0020-0026]).

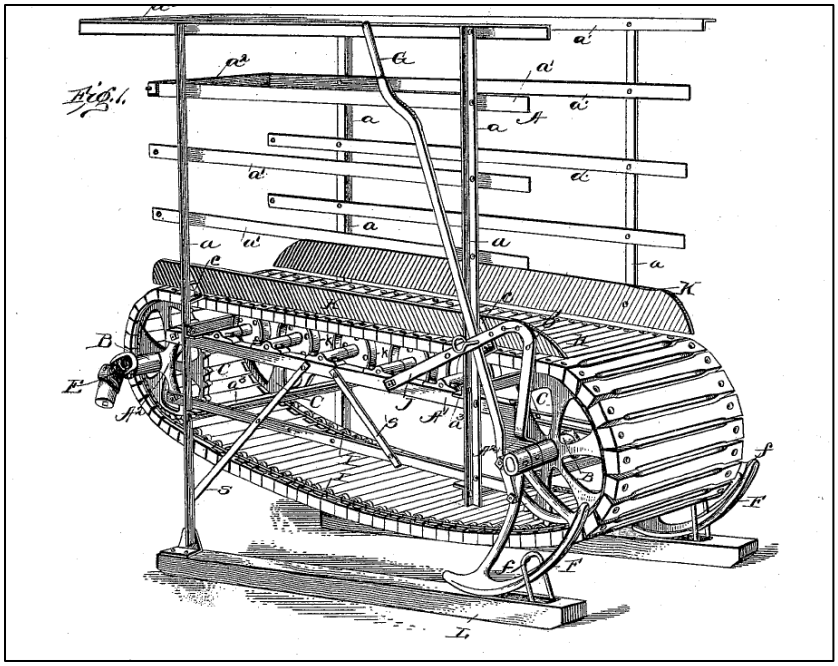

Figure 22. Figure 1 from Ziebell.

107. Ziebell (Fig. 1) discloses a front shaft and a rear shaft (B, B) coupled to the frame.

108. Abelbeck (Fig. 2) discloses a front shaft and a rear shaft coupled to the frame.

109. Eschenbach discloses a front shaft and a rear shaft coupled to the frame: "Belt 260 is trained to engage rollers 262, 264 which are rotatably attached at shafts 259, 261 to the framework (not shown)." (Eschenbach col. 6, 59-61).

D. At Least One Bearing Rail Having A Plurality Of Bearings, A Running Belt Supported By The Bearing Rail And At Least Partially Disposed About The Front And Rear Shafts

110. During claim construction, the Court found that a bearing is "a device that supports, guides and reduces the friction of motion between fixed and moving machine parts. Claim Construction Ruling, p. 12. Woodway conceded that the bearing rails are "elements separate and distinct from the treadmill frame." Claim Construction Ruling, p. 7.

111. The Court further determined that "rotatably coupled" (found in claim 11 of the '169 patent) would be "understood by a person of ordinary skill in the art to contemplate a device connected such that one part of the connected element would remain stationary while another part

would rotate, because a person of ordinary skill would understand that bearings commonly have a stationary component and a rotatable component." Claim Construction Ruling, p. 20.

112. Finally, the Court found that "all four independent claims of the '580 Patent require the running belt to be supported, at least partially, by the bearing rail, in order to provide the running belt with its curved surface." Claim Construction Ruling, p. 23.

113. Roughly a century ago, Schmidt solved the same problem as Woodway claims it solved with the '169 patent and the '580 patent, i.e. inducing the running belt to assume and maintain the non-planar shape. (Schmidt col. 11, 17-29). The Schmidt invention, as recognized by art that followed, teaches a simplified and streamlined system that keeps the belt from walking side to side during usage.

114. Manual treadmills available circa Schmidt included substantially flat running surfaces that used rollers or wheels. Schmidt recognized that by using a curved running surface, a treadmill would keep the user in a relatively constant location relative to the running surface without the need for a motor or harness. Schmidt recognizes that a curved shape related to human anthropometric properties keeps a user in a relatively stable position on a manual treadmill, consistent with Hall's treadwheel style treadmills that came nearly 70 years later and were cited during the prosecution of both the '169 and '580 patents. As a result, Woodway's statement in the specification (Bayerlein '169 col. 6, 49-63) identifying advantages of a non-planar running surface is only a restatement of well-known principles.

115. In addition, Schmidt allows for a concave shape of the rails curved in accordance with the anthropometry of the user, as taught by Schmidt, but not limited to a specific curvature. Schmidt also includes an adjustment device in his treadmill that can alter the perceived rigidity of the running surface, but in fact, is accomplished by enforcing a change in shape of the support rails.

116. More importantly, Schmidt was the first to teach that the weight of the belt, pulling down on it by gravity combined with slack in the belt causes the belt to maintain contact with the rails below it, allowing the profile of the running surface to conform to the rails below it.

117. Together with the curved running surface, Schmidt could have used the pre-existing art and incorporated wheels or bearings into the rails (d) of the Schmidt device because this method was well known and understood. As articulated above, even before Schmidt, several teachings disclosed running belts, lateral slats and an endless belt mechanism to ensure running belt tracking. E.g., Briggs, Ziebell.

118. Schönenberger discloses (Figs. 3, 7) at least one bearing rail having a plurality of bearings, a running belt supported by the bearing rail and at least partially disposed about the front and rear shafts. Specifically, Schönenberger discloses a bearing rail (part 32), described as transversely located angle irons, T-rails, or channel rails or other suitable structural members supported on separate frame members (36, 37), a plurality of bearings (12), and a running belt ("U-belt") supported by the bearing rail and at least partially disposed about the front and rear shafts (col. 5, 36-63):

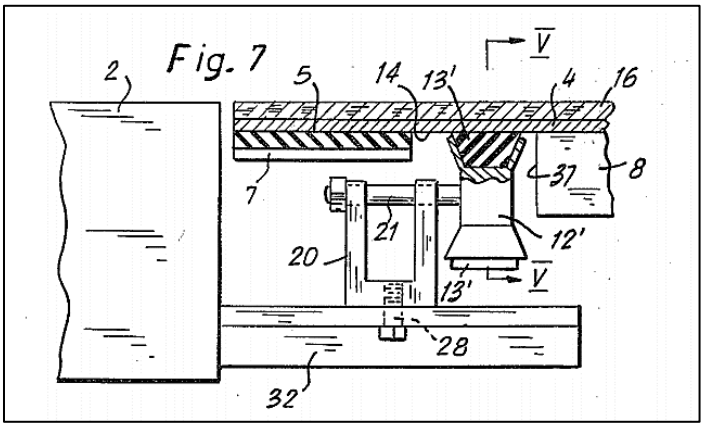

Figure 23. Figure 7 from Schönenberger.

119. Schmidt discloses at least one bearing rail, a running belt supported by the bearing rail and at least partially disposed about the front and rear shafts. As the Court noted and in accordance with ordinary power transmission technology, component (d), as described in Schmidt, provides a similar friction and wear reduction function taught as part of Bayerlein, see Bayerlein '580 col. 13, 1-12. That is, both sliding and rolling allow one object to contact and move across another. An explicit indication of anti-friction is not provided or claimed in Bayerlein. Therefore,

in accordance with the Court, in this instance a bearing rail with roller bearings is equivalent to a bearing rail with a bearing plate intended for sliding contact.

120. With or without roller bearings as the friction reducing element, the running surface's profile corresponds to the shape of the bearing rail supporting it, and during operation, the running belt moves relative to the rails. In sum, a PHOSITA would recognize that the two means are equivalent and that the use of roller bearings is substituting well known components to achieve the same results already achieved by the prior art.

121. Cutter discloses at least one bearing rail having a plurality journaling sockets located on the inside face of the frame side members and arranged to provide a curving path; and part 18 described as rollers), a continuous running belt (30) supported by the bearing rail and at least partially disposed about the front and rear shafts (25, 20). (Cutter col. 3, 1-11, 33-34).

122. Chickering discloses at least one bearing rail (14, shown in Fig. 1 as distinct from the side wall of the frame (22)) having a plurality of bearings (13), a running belt (16, 28) supported by the bearing rail and at least partially disposed about the front and rear shafts (26, 29a, b). (Chickering col. 2, 27-49; Fig. 3).

123. Socwell discloses at least one bearing rail (94, described as one or more belt securing assemblies which provide a means for retaining the endless belt 16 in a curvilinear configuration) having a plurality of bearings (98 [roller], 96 [mounting bracket]), a running belt (16) supported by the bearing rail and at least partially disposed about the front and rear shafts (78, 86). Col. 9, 44-65. Socwell expressly recognizes that "it will be apparent that other belt securing mechanisms may be constructed in accordance with the inventive principles set forth herein." (Socwell, col. 9, 6- col. 10, 2).

124. Pasqualin discloses at least one bearing rail (17) having a plurality of bearings (17a), a running belt (15) supported by the bearing rail and at least partially disposed about the front and rear shafts (13, 14). (Pasqualin [0020-0026]).

125. Frazeur discloses at least one bearing rail (track, B which is bolted to the frame) having a plurality of bearings (C, which travel around the track), a running belt (endless belts of lags, F) supported by the bearing rail and at least partially. See Frazeur Fig. 4.

126. Ziebell discloses (in claim 4) at least one bearing rail (identified as an auxiliary frame [A'] mounted and maintained "upon said main frame or support [A]") having a plurality of bearings (described as sprockets or bearing wheels, k), a running belt supported by the bearing rail and at least partially disposed about the front and rear shafts (B). See Ziebell Fig. 1.

127. Abelbeck discloses at least one bearing rail (identified as the upper race 40 and lower race 42) having a plurality of bearings (identified as a support member (36) which can be a wheel or a ball bearing), a running belt (identified as deck members) supported by the bearing rail and at least partially disposed about the front and rear shafts. See Abelbeck Figs. 2, 4.

128. Eschenbach discloses at least one bearing rail (described as flexible linking) having a plurality of bearings (described as idlers), a running belt (described as an endless belt 12) supported by the bearing rail and at least partially disposed about the front and rear shafts. (Eschenbach, Col. 2, 26-38, 48-55).

E. A Device to Ensure Unidirectional Movement of the Belt

129. As described above, at the relevant period of time (i.e. before the priority date of the patents in suit), ISO/EN defined a treadmill as "training equipment with a <u>unidirectional</u> moving surface on which a walking or running activity can take place where the feet are free to leave the moving surface." ISO 20957-6:2005/EN 957-6:2001 (emphasis added.)

130. As a result, it is obvious to a PHOSITA that a unidirectional moving surface is not a novel concept. Bayerlein '169 suggests a number of well known, commodity power transmission products that can ensure unidirectional movement of a belt: a one-way bearing assembly, locking systems, taper locks, user operated pin systems, or a band brake with a lever. Bayerlein col. 29, 23-27.

131. Prior art almost 100 years old teaches the basic principle of using a device to ensure unidirectional movement of a moving belt.

132. For example, the Briggs patent described above discloses a flywheel device to ensure consistent and expected movement of the belt. The flywheel is joined to the front shaft.

133. Frazeur also discloses a device to ensure unidirectional movement of the belt in the form of a flywheel as well as a handbrake (O) to stop the running belt from moving through interference with the flywheel (M). See Frazeur Fig. 1 (Fig. 3 of this Report).

134. Schmidt also discloses a device to ensure unidirectional movement in that the reference explicitly teaches an option for freely rotating or stationary front and rear shafts, as desired. (Schmidt, col. 1, 73-74.) With this insight, a PHOSITA would recognize that a roller could be made to rotate or be stationary by joining common power transmission elements to the roller or shaft; elements like a ratchet and pawl.

135. Liu teaches and claims that the continuous belts are wound around rotary shafts (22, 23) which "can rotate in only one direction," so the "rolling belt 24 can only be moved rearward." (Liu, col. 2, 11-16, 31-36).

136. The Haber patent, entitled "User Propelled Treadmill" teaches a self-propelled treadmill with a one-way clutch (22) "of conventional design," i.e. a design understandable to a PHOSITA to perform the same function as the other unidirectional devices available by that 1995 time frame.

137. Magid also teaches a ratchet and pawl "unidirectional control mechanism" on a rear shaft (Magid col. 4, 47-49) that restricts the running belts of the treadmill to movement in a single direction of travel.

138. In sum, a PHOSITA would understand the utility of a one way clutch to enforce a desired shaft rotation as noted in Schmidt. Liu's unlimited teaching conveys to a PHOSITA that there exists a known method to enforce the single direction of rotation. Magid also discloses an explicit method to enforce the single direction of shaft rotation: the ratchet and pawl joined to the shaft. The ratchet and pawl is a simple power transmission device similar to a one way bearing.

The one way bearing is also a common power transmission component used in mechanical devices like conveyors.[38]

F. Additional Dependent Claim Limitations.

139. Dependent claim 12 of Bayerlein '169 adds an additional limitation of "the bearing rail longitudinally extends along the frame and is longitudinally aligned with at least one front belt pulley and one of the at least one rear belt pulley. As set forth above Ziebell meets that limitation and teaches a treadmill with a frame and a running belt disposed about a front and rear shaft that each are rotatably joined to the frame. The front and rear shafts are part of an assembly that includes front and rear pulleys. See Ziebell Figure 1. As previously described and in Plaintiffs' Invalidity Contentions, this limitation is a predictable variation that achieves the same result as the cited prior art (e.g., Socwell, Pasqualin).

140. Furthermore, rails (d) in Schmidt are also longitudinally aligned with the front and rear pulleys.

141. Dependent claims 13 and 14 of Bayerlein '169 adds an additional limitations of a running belt that comprises a plurality of laterally extending slats including endless belts. As set forth above, and in Plaintiffs' Invalidity Contentions, at least Briggs, Frazeur, and Ziebell meet this limitation.

142. Dependent claims 13 and independent claim 19 of Bayerlein '580 add an additional limitation of wheels. As set forth above and in Plaintiffs' Invalidity Contentions, this limitation is a predictable variation that achieves the same result as the cited prior art (e.g., Socwell, Cutter, Magid). Nevertheless, wheeled devices abound that engage with the floor at will and are not unique (for example, a quick google image search, not a patent search, located US6241638 filed in 1998 for a treadmill that also has wheels not in contact with the floor while in use).

[38] See, for example, page 5-79 of the Power Transmission Handbook. Copyright 2006

143. Dependent claim 14 and independent claim 19 of Bayerlein '580 include a limitation of feet that are adjustable. Not only is that limitation met by the references included herein and in Plaintiffs' Invalidity Contentions, but it is also expressly shown by Chickering. For other examples of adjustable feet see Ziebel, Morairty, and Schmidt. Even Magid allows for the base to be mounted on other objects so that it is off the ground, Magid calls these supporting frame. Adjustable feet are presented in a number of ways, with Ziebel, it is a cam system, with Morairty it is a single screw adjustment.

144. Dependent claims 10, 14 and independent claim 19 of Bayerlein '580 include a limitation of a handrail to provide a support structure for a use. As set forth above, and in Plaintiffs' Invalidity Contentions, at least Eschenbach, Frazeur, and Cutter meet this limitation. In addition, ISO/EN (2005) requires that treadmills have a handrail either on the front, or on each side.

G. Motivation to Combine References

145. Manually operated treadmills are perceived as more environmentally friendly devices (e.g. Hall '047) that do not necessarily require external power sources or motors or flywheels to maintain motion. There are also gyms in the United States that advertise power generation through the use of self-powered exercise equipment as a gym feature or benefit.[39] Power generation using treadmills goes back to the earliest patents cited above and frequently include clutches as part of the invention (e.g. Briggs, Frazeur, Ziebell, Hall).

146. As clearly laid out in the prior art (e.g. Hall, Morairty, Schmidt, Cutter, Chickering) a curved surface can be implemented as an effective means to keep the user in a relatively stable position relative to the running surface. As described by Hall, Schmidt, and Cutter, curving the surface in relation to the runner provides many positive attributes in a treadmill device.

147. Schmidt's solution, patented in 1917, simplifies the existing treadmill art. Modern treadmills generally follow this advance and utilize a friction board, or friction bed, similar to

[39] http://content.time.com/time/business/article/0,8599,2032281,00.html (2010)

conveyor technology which is generally more cost effective and weight saving. However, as is known, even with low friction surfaces on the friction bed and belts impregnated with lubricant, sliding frictional forces do increase with increased compressive force between the belt and the friction bed. In the age when obesity is a health concern since more than a third of United States adults are obese[40] increased effort due to friction may be a perceived concern. A PHOSITA understands that such a concern may motivate use of rollers or roller bearings despite the increase the cost and complexity of their device in an effort to minimize friction that may not have been required for typical users in 1917.

148. Furthermore, as is well known in the art, flywheels are commonly used to store kinetic energy of moving devices, e.g. belts. It is known that a flywheel attached to a moving belt will cause the motion of the belt to be resistive to changes in speed, useful for a treadmill. As part of this resistance to change in speed is also a resistance to changing direction. A flywheel is a simple device and present on a number of the earliest treadmill patents (e.g. Briggs). The drawback of using a flywheel is that it is potentially heavy, large, and needs to be balanced for the speed ranges at which it will be used. One way bearings and ratchet and pawls do not have the large weight and size requirements of flywheels. Modern technology has made ratchets and one way bearings reliable and cost effective. Combined with their small relative size and light weight they are obviously ideal to combine with devices that have heavy running belts.

[40] https://www.cdc.gov/obesity/data/adult.html, Last accessed February 27, 2017

149. It is my opinion that a PHOSITA would appreciate and understand the combination of references cited herein to meet the limitations of the asserted claims of the patents in suit.

A. CONCLUSION

150. Based on my education, training, experience, and review of the prior art and the other documents considered, it is my opinion that each of the asserted claims of the '580 and '169 Patents is invalid.

Dated: March 2, 2017

Robert S. Giachetti

Exhibit A

Curriculum Vitae of Robert Giachetti, Ph.D., P.E.

Exponent®
Engineering & Scientific Consulting

Robert Giachetti, Ph.D., P.E.

Managing Engineer | Mechanical Engineering
525 W. Monroe St., Suite 1050 | Chicago, IL 60661
(312) 999-4208 tel | rgiachetti@exponent.com

Professional Profile

Dr. Giachetti has experience solving technical problems in a variety of industries including product development, evaluation, assistance with recalls, and mechanical performance of systems. His academic emphasis included topics in mechanics of materials, non-linear continuum mechanics, non-linear dynamics, vibrations, and finite element analysis. His background in mechanics and instrumentation allows him to easily build, monitor, or analyze complex systems. These systems have ranged from wire ropes, cookware, and child carriers to transducers, machine presses and railcars.

Prior to joining Exponent, Dr. Giachetti worked in industry designing steel coiling machinery and overhead lifting devices. While performing his graduate research, he worked in the Biomechanics laboratory at the University of Illinois investigating factors which increase the contact stresses between adjacent components in total knee replacements through three dimensional computer modeling and finite element analysis. His doctoral research in the University of Wisconsin's Biomechanics Laboratory involved characterizing the underlying control strategy of bipedal stability based on the end-point force output of the lower limbs.

Dr. Giachetti has substantial experience utilizing LabView to create specialized data acquisition solutions that implement multiple, simultaneous sensing technologies for real-time analysis. His acquisition solutions have included accelerometers, potentiometers, thermocouples, GPS devices, pressure transducers, force plates, and low-cost web cams. This technology has been used in various ways, including: two-dimensional optical motion capture, custom whole body occupant vibration analysis, custom cyclic load testing, and temperature acquisition.

Dr. Giachetti also has extensive experience utilizing AutoCAD, Ansys, Matlab, Mathcad, EES, and 3DSSPP.

Academic Credentials & Professional Honors

Ph.D., Mechanical Engineering, University of Wisconsin, Madison, 2008

M.S., Mechanical Engineering, University of Illinois, Chicago, 2000

B.S., Mechanical Engineering, Marquette University, 1997

Licenses and Certifications

Licensed Professional Engineer, Illinois, #062062996

ASTM Committee F08 on Sports Equipment, Playing Surfaces, and Facilities - voting member

ASTM Committee F15 on Consumer Products - voting member

Session Organizer: ASME 2015 Power Transmission and Gearing Conference

Academic Appointments

University of Wisconsin-Madison, Departments of Mechanical Engineering and Kinesiology

- Lecturer, Introduction to Dynamic Systems (Vibrations)
- Teaching Assistant, Introduction to Biomechanics
- Teaching Assistant, Introduction to Dynamic Systems

University of Illinois at Chicago, Department of Mechanical Engineering

- Teaching Assistant, Engineering Economy

Marquette University, Department of Physics

- Teaching Assistant, General Physics

Prior Experience

Intern, BioTechPlex, 2001

Project Engineer, Braner USA, 1998-1999

Estimator and Engineer, Alloy Sling Chain Industries LTD., 1998

Publications

Perlmutter, S, Cades DM, Heller, MF, Giachetti, RS, Sala JB, Arndt, SA. Effects of mobile technology use on walking. Proceedings, 58th Human Factors and Ergonomics Society Annual Meeting, 2014.

Giachetti R, Danek K. Analytical model for estimating knee loads during ladder climbing. ASME 2013 International Mechanical Engineering Congress & Exposition, 2013.

Giachetti R, Weaver B, Trimble J. Real-time monitoring and analysis of whole body vibration in locomotive engineers. 4th International Conference on Whole-Body Vibration Injuries, 2009.

Gruben KG, Giachetti RS, Lazarus JA. Directional control of foot force in Parkinson disease. The Movement Disorder Society's 12th International Congress of Parkinson 's Disease and Movement Disorders, 2008.

Gruben KG, Giachetti RS, Schmidt MW. Control of force direction depends on center of pressure not limb posture. Society for Neuroscience 36th Annual Meeting, 2006.

Giachetti RS, Gruben KG. Foot force direction and center of pressure. Progress in Motor Control V, State College, PA, 2005.

Gruben KG, Hasman CL, Schmidt MW, Giachetti RS, Tan L. Altered directional control of foot force is a primary effect of stroke. Progress in Motor Control V, State College, PA, 2005.

Gruben KG, Lopez-Ortiz C, Giachetti RS. Muscular and postural components of foot force during quasi-

static extension efforts. JAB 19(3), 2003.

Gonzalez M, Giachetti R, Aram L, Amirouche F. Validation of a finite element contact model for the use in total knee arthroplasty. Orthopaedic Research Society 47th Annual Meeting, 2001.

Amirouche FM, Giachetti RS, Aram L, Gonzalez M. Induced stress in TKA resulting from malrotation. Summer Bioengineering Conference, 2001.

Aram L, Amirouche FM, Gonzalez M, Giachetti RS. Characterization of contact pressure in total knee arthroplasty as a function of component position and ligament balance. XVIIIth Congress of the ISB, 2001.

Amirouche FM, Giachetti RS, Aram L, Gonzalez M. Validation of a finite element contact model for the use in total knee arthroplasty. XVIIIth Congress of the ISB, 2001.

Amirouche FM, Aram L, Gonzalez M, Giachetti RS, Mahr C. the fitting of the human joint through micro-implanted sensors. Proceedings, 1st Annual International IEEE-EMBS Special Topic Conference on Microtechnologies in Medicine & Biology, 2000.

Amirouche FM, Gonzalez M, Aram L, Giachetti RS, Mahr C. A contact pressure based prosthetic fitting device for a Total Knee Arthroplasty (TKA). Proceedings, Engineering of Sport 3rd International Conference and Exhibition, 2000.

Giachetti R, Amirouche F, Aram L, Gonzalez M. Biomechanical problems with contact pressure distribution in the knee joint after total knee arthroplasty. Proceedings, ASME Winter Conference, 2000.

Additional Education & Training

American Gear Manufacturers Association (AGMA) Training: Detailed Gear Design - Beyond Simple Service Factors

Peer Reviewer

ASME 2013 International Mechanical Engineering Congress & Exposition (IMECE), San Diego CA, November 15-21. Track: Dynamics, and Control in Biomechanical Systems.

ASME 2011 International Design Engineering Technical Conference & Computers and Information in Engineering Conference (IDETC/CIE),Washington, DC, August 28-31. Track: Surface Engineering and Tribology.

Exponent®
Failure Analysis Associates®

Exponent
525 W. Monroe Street
Suite 1050
Chicago, IL 60661

telephone 312-999-4200
facsimile 312-999-4299
www.exponent.com

Robert S. Giachetti Ph.D., P.E.,
Managing Engineer

Testimony

Rouse v. Borkwoski, Circuit Court of the Nineteenth Judicial Circuit, Lake County Illinois.

Jenkins v. United Access of Kansas City, LLC, et al., District Court of Wyandotte County, Kansas Civil Court Department.

Exhibit B

Documents Considered

Documents Considered:

1. Complaint, *Woodway USA Inc. v. Samsara Fitness LLC*, filed Aug. 11, 2015 in the United States District Court for the Eastern District of Wisconsin
2. Complaint, *Chapco Inc. and Samsara Fitness, LLC v. Woodway USA, Inc.*, filed November 16, 2015 and December 29, 2015 (to correct error in caption) in the United States District Court for the District of Connecticut (the "Connecticut litigation")
3. Woodway USA Inc. ("Woodway") Counterclaim, filed July 26, 2016
4. Woodway's Proposed Amended Counterclaim, filed February 27, 2017
5. Woodway's Preliminary Infringement Contentions, dated April 18, 2016, including Appendix A and Appendix B
6. Plaintiffs' Preliminary Non-Infringement Contentions, dated May 27, 2016, including Exhibits A and B
7. Woodway's Supplemental Preliminary Infringement Contentions, dated July 18, 2016, including Appendix A
8. Plaintiffs' Supplemental Non-Infringement Contentions, dated August 8, 2016, including Exhibits A through D
9. Claim Construction Ruling, Filed Dec. 8, 2016
10. Plaintiffs' Opening Claim Construction Brief, filed July 25, 2016
11. Plaintiffs' Opening and Responsive Claim Construction Brief, filed August 22, 2016
12. Woodway's Responsive Claim Construction Brief, filed September 6, 2016
13. Plaintiffs' Disclosure of Disputed Claim Terms, Proposed Constructions and Intrinsic Evidence, dated June 17, 2016, including Exhibit A
14. Plaintiffs' Preliminary Invalidity Contentions, dated May 27, 2016, including Exhibits A-I

15. Plaintiffs' Supplemental Invalidity Contentions, dated August 8, 2016, including Exhibits J and K
16. Woodway Curve Owner's Manual, p. 22
17. File history of U.S. Patent No. 8,986,169
18. File history of U.S. Patent No. 9,039,580
19. Patents and Patent Applications:
    a. U.S. Patent No. 8308X (Briggs) 1834
    b. U.S. Patent No. 411,986 (Frazeur), 1889
    c. U.S. Patent No. 641,424 (Ziebell) 1900
    d. U.S. Patent No. 767,221 (Hagen) 1904
    e. U.S. Patent No. 759,296 (Morairty) 1904
    f. U.S. Patent No. 783,769 (Wright) 1905
    g. U.S. Patent No. 931,394 (Day) 1909
    h. U.S. Patent No. 1,211,765 (Schmidt) 1917
    i. U.S. Patent No. 2,117,957 (Heller) 1938
    j. U.S. Patent No. 2,842,365 (Kelley) 1958
    k. U.S. Patent No. 3,637,206 (Chickering) 1972
    l. U.S. Patent No. 3,642,279 (Cutter) 1972
    m. U.S. Patent No. 4,334,676 (Schonenberger) 1982
    n. U.S. Patent No. 4,389,047 (Hall) 1983
    o. U.S. Patent No. 4,544,152 (Taitel) 1985
    p. U.S. Patent No. 4,659,074 (Taitel) 1987
    q. U.S. Patent No. 5,411,455 (Haber) 1995
    r. U.S. Patent No. 5,432,612 (Holden) 1995
    s. U.S. Patent No. 5,470,293 (Schoenenberger) 1995
    t. U.S. Patent No. 5,538,489 (Magid) 1996
    u. U.S. Patent No. 5,575,7402 (Piaget) 1996
    v. U.S. Patent No. 5,577,598 (Schoenenberger) 1996
    w. U.S. Patent No. 5,669,856 (Liu) 1997
    x. U.S. Patent No. 5,709,632 (Socwell) 1998
    y. U. S. Patent No. 6,042,514 (Abelbeck) 2000
    z. U.S. Patent No. 6,053,848 (Eschenbach) 2000
    aa. U.S. Patent No. 6,500,097 (Hall) 2002
    bb. U.S. Patent No. 6,740,009 (Hall) 2004
    cc. U.S. Patent No. 6,893,382 (Moon) 2005
    dd. U.S. Patent No. 8,986,169 (Bayerlein) 2015
    ee. U.S. Patent No. 9,039,580 (Bayerlein) 2015
    ff. Chinese Patent 201333278, 蔡岳璋, Oct 28. 2009

gg. German Patent No. 202006005995 (Zeitler) 2006
hh. U.S. Patent Application US 2007/0123396 (Ellis) 2005
ii. U.S. Patent Application US 2005/0009668 (Savettiere) 2005
jj. U.S. Patent Application US 2006/0287165 (Pasqualin) 2006
kk. U.S. Patent Application US 2008/0020907 (Lin) 2008
ll. U.S. Patent Application US 2010/0216607 (Mueller) 2010
mm. U.K. Patent Application, 2,223,685 (Chen) 1988

20. "Appendix A" Claim Chart for U.S. Patent No. 8,986,169
21. "Appendix B" Claim Chart for U.S. Patent No. 9,039,580
22. "Exhibit A" to Non-Infringement Contentions for U.S. Patent No. 8,986,169
23. "Exhibit B" to Non-Infringement Contentions for U.S. Patent No. 9,039,580
24. Owners Manual for NordicTrack WalkFit Classic Treadmill
25. ISO 20957-6:2005
26. OSHA 1926.307
27. OSHA 1926.219
28. "Power Transmission Handbook" 2009, Fourth Edition, 2nd Printing, by Power Transmission Distributors Association
29. http://www.mpiwg-berlin.mpg.de/resrep00_01/Jahresbericht_2_2_section.html
30. http://www.museivaticani.va/content/museivaticani/en/collezioni/musei/museo-gregoriano-profano/Mausoleo-degli-Haterii.html
31. www.gettyimages.com/detail/463782507 Animal treadmill c. 1872, Museum of Science and Industry, Chicago.
32. http://www.gettyimages.com/license/542395667 1930 era treadmill