Overrunning Clutches and Backstops

Stieber Clutch®
Altra Industrial Motion

EX2029
Woodway USA, Inc.
IPR2024-00083

MANY CUSTOMERS PUT THEIR TRUST IN STIEBER.

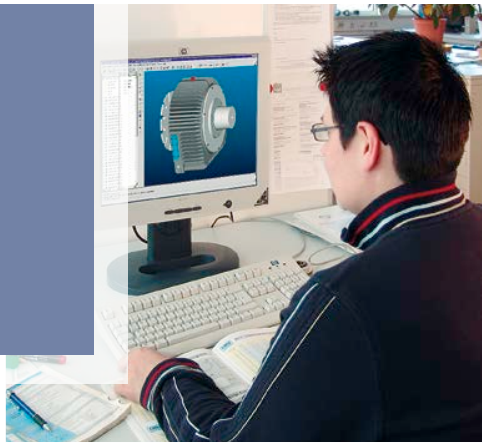

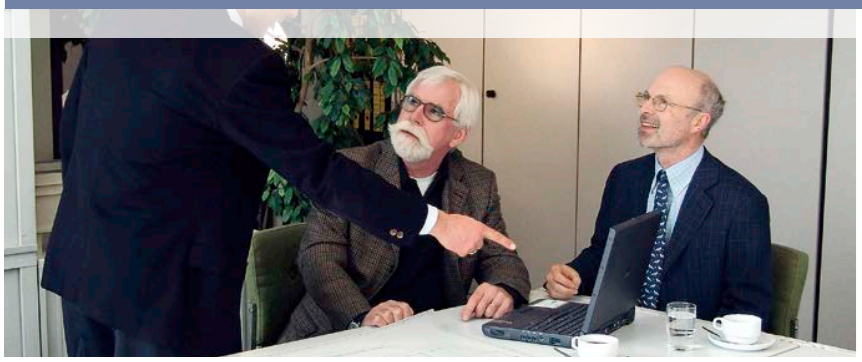

STIEBER

Stieber was founded in Munich in 1937 and is now a medium-sized company employing 140 people at its locations in Heidelberg and Garching near Munich.

Our core business activity is the design and production of drive elements for mechanical engineering systems. Our major strength is the development and production of overrunning clutches and backstops, which transmit torque by means of friction.

Stieber can reflect on numerous innovative developments during the course of the company's history innovations that have made it the European market leader. Stieber proved its technical ability once again during the development and design of the largest backstop in the world, for example. This and other backstops are being successfully used even under the toughest of conditions.

Stieber, part of the Altra Industrial Motion Group is – together with its sister companies Formsprag and Marland in the USA – the world's market leader for overrunning clutches and backstops.

Our extensive world-wide service network including more than 1000 stocking distributors and technical centres ensures we are always close to the customers.

Our company philosophy is total customer satisfaction. To achieve this, our processes undergo continual refinement.

Stieber has been certified according to DIN EN ISO 9001 since 1997 and according to ISO 14001 (environment management system) since the year 2000. In addition, an internal monitoring process ensures that quality, timeliness and costs are always to the fore.

ALTRA INDUSTRIAL MOTION

Altra is a leading multinational designer, producer and marketer of a wide range of mechanical power transmission products. We sell our products in over 70 countries throughout the world. Our products are frequently used in critical applications, such as fail-safe brakes for elevators, wheelchairs and forklifts, and in high-volume manufacturing processes, where the reliability and accuracy of our products are critical in both avoiding costly down time and enhancing the overall efficiency of manufacturing operations.

Our products are marketed under a variety of well recognized and established manufacturing brand names. These leading brands are Ameridrives, Boston Gear, Warner Electric, Formsprag Clutch, TB Wood's Incorporated, Industrial Clutch, Kilian Manufacturing, Marland Clutch, Nuttall Gear, Stieber Clutch, Twiflex Ltd, Huco Dynatork, Bibby Turboflex, Matrix International, Inertia Dynamics, Delroyd Worm Gear, Warner Linear, Wichita Clutch and Lamiflex Couplings.

Visit us on the web

WWW.STIEBER.DE

Conveyor Belts
Coal Crushing Equipment
Pumps
Rolling Mills
Seed Drilling Machines
Rotary Furnaces
Silos
Ventilators
Forming Machines
Print Machinery
Engine Test Benches
Car Washing Systems
Ball Presses
Roller Costers
Textile Machines
High-Voltage Switchgear
Fitness Equipment
Winches
Clay Pigeon Traps
Automotive Industry
Aerospace
Power Station Technology

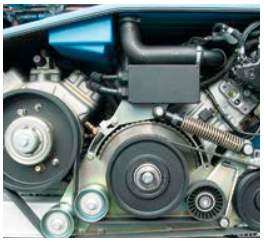

Contents

Overrunning Clutches and Backstops

Stieber – Competence is our strength 2
The principle 3
Design 5
Selection 6
Selection procedure 7
Selection table 10

Combined Bearing/Freewheel 14

CSK 14
CSK..2RS 14
CSK..P 16
CSK..PP 16
CSK..P-2RS 16
ASK 18
GFK 20

Built-In Freewheels 22

AS 22
ASNU 24
AE 26
AA 28
NF 30
S200 32
DC 34
DC-Races 36
NFR 38

Self-Contained Freewheels 40

RSBW 40
AV 42
GFR 44
GFRN 44
GFR..F1F2 46
GFR..F2F7 46
GFRN..F5F6 46
GFR..F2F3 48
GFR..F3F4 48
AL 50
ALP 50
AL..F2D2 52
AL..F4D2 52
ALP.. F7D7 54
ALMP..F7D7 54
AL..KMSD2 56
AL..KEED2 58

Mounting instructions 12
Lubrication and maintenance 13
Products 14
Special designs 94
Alphabetical list 95

SMZ 60
FSO 300-700 62
FSO-GR 300-700 62
HPI 300-700 62
FS 750-1027 64
FSO 750-1027 64
HPI 750-1027 64
AL..G 66
CEUS 68
BC MA 70
RDBR-E 72

Centrifugally Lift-Off Sprags Freewheels 74

Built-in freewheels
RSCI 20-130 74
RSCI 180-300 76
RSXM 78
RSRV 80
RSRT 80
RDBK 82

Self-contained Freewheels
RIZ-RINZ 84
RIZ..G1G2 86
RIZ.. G2G7 86
RINZ..G5G5 86
RIZ..G2G3 88
RIZ..G3G4 88
RIZ..ESG2 90
RIZ..ELG2 92

ALPHABETICAL LIST PAGE 97

IMPRINT

Published by:
© Stieber GmbH
Hatschekstraße 36
69126 Heidelberg
Germany

This document must not be reprinted, duplicated or translated in full or in part without our prior written consent and without reference to the source of the material.

All content including pictures and diagrams is subject to alteration. We accept no liability.

STIEBER: COMPETENCE IS OUR STRENGTH.

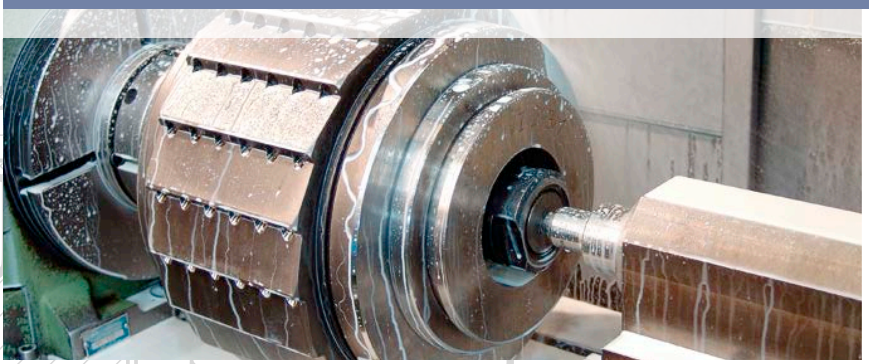

INNOVATIVE: DEVELOPMENT

Throughout it's long history Stieber has been familiar with all types of freewheel designs such as roller and sprag variants and consistently led the way in developing new designs and technologies. We have an unmatched ability in the field of overrunning clutches, built on the long experience of our team of qualified engineers and always seeking the best answers in design and manufacture. Alongside a continuous program of product development unique solutions have been found over the years including:

- Encased overrunning clutches lubricated and cooled by internal oil circulation without the need for a pump.
- Overrunning clutches that may be disengaged either manually or pneumatically.
- Irreversible locks. A novel adaptation of the freewheel principle

and more than 4,000 special designs developed for specific customer requirements. We can supply anything from 0.8 to 1.7 million Nm so you can be sure of finding the best solution, whatever the application.

ACCURATE: PRODUCTION

Standard products and customer-specific items are produced according to the latest techniques and quality requirements in our two manufacturing plants. Our skilled and experienced workforce take every care to deliver to you a reliable, quality product. Our commitment to continuous improvement ensures that our systems and processes are constantly under review. Over the past few years this has led to a 30% time saving in manufacture, for example. The assembly and warehouse departments control stock and material flow using a Kanban system to ensure the correct availability of standard parts and on-time delivery to you the customer. If you buy your freewheels from Stieber you can be sure of the best in quality and reliability for you and your customers guaranteed.

TRADEMARK: QUALITY

Total quality is assured both by meeting prescribed product performance specifications and thanks to the reliability of manufacturing methods and process workflows including integrated tests. The key technical data of Stieber products are either calculated using FVA* methods and/or verified on our test benches.

We have test machines with a torque capacity of up to 700.000 Nm. During idling, units with a bore up to 600 mm can be tested at speeds of up to 1.500 rpm. The modern equipment in our quality department allows us to carry out all the necessary tests ourselves, such as those for the nuclear power industry, for example. Thanks to this, Stieber has been certified by Framatome/ Siemens among others in compliance with KTA 1401.

* Power Transmission Research Association

THE PRINCIPLE:
THE RIGHT ANSWER – EVERYTIME.

1

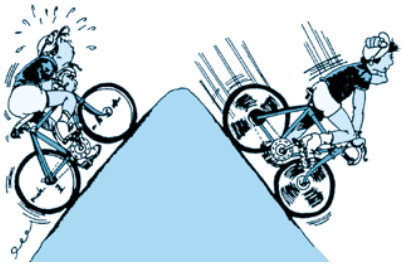

2

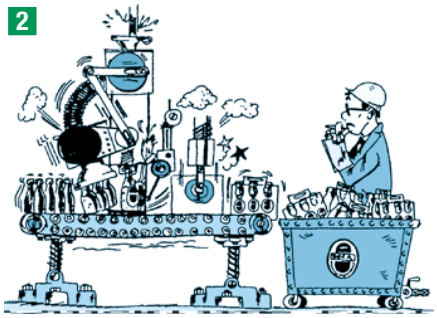

3

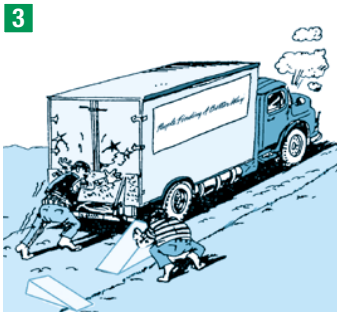

1 OVERRUNNING CLUTCH
The freewheel disengages automatically when the driven member rotates faster than the driving member.

2 INDEXING CLUTCH
The freewheel allows the conversion of reciprocating motion into a discontinuous rotational movement.

3 BACKSTOP
The freewheel allows rotation in one direction only. It overruns continuously during operation. The freewheel prevents reverse rotation if the drive is disconnected.

Overrunning clutches are directional couplings, which means they are engaged and disengaged automatically, depending on the relative direction of rotation of the driving and driven sides. Practical applications of this principle:

1 OVERRUNNING CLUTCH
for multiple-machine drives or to separate the inertia of masses of a driven machine from the driving machine after it has been switched off.

2 INDEXING CLUTCH
which turns a shaft step by step, thus achieving indexed material feed or a variable speed.

3 BACKSTOP
to prevent a machine shaft turning backwards. In this case the overrunning clutch acts as a brake.

BASIC FORMS: ALWAYS A PERFECT SOLUTION.

To achieve the functions described overleaf, so-called locking elements are positioned between an outer and an inner race which effect engaging and disengaging. These locking elements are of two basic designs:

ROLLER CLUTCH
Mainly used as overrunning and indexing clutches.

SPRAG CLUTCH
Most suitable as backstops, and mostly the contact-free versions.

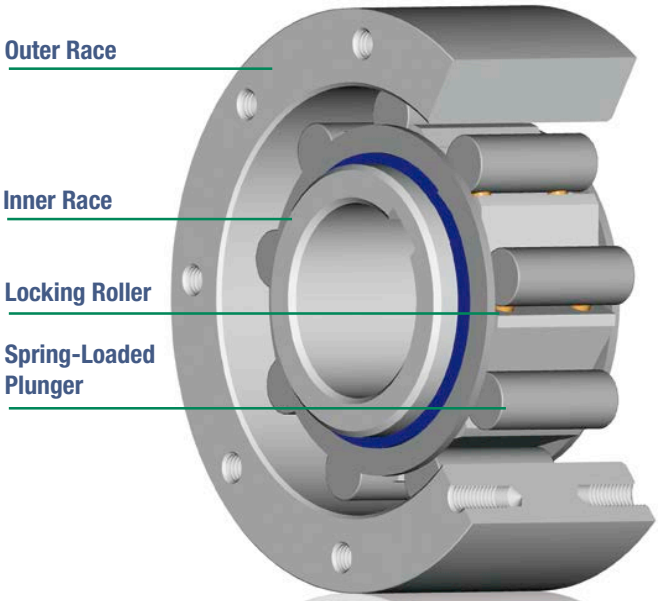

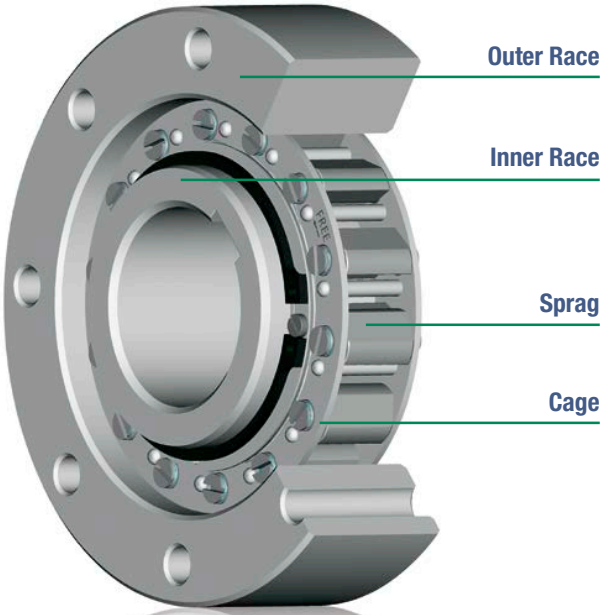

- Rugged
- Versatile
- High indexing accuracy
- High performance overrunning clutch

- High overrunning speed
- High torque capacity
- High eccentricity tolerances
- Accepts any lubricant

We offer our freewheels in different versions either without bearing support (built-in) or with bearing support (self-contained). (see selection table page 10)

DESIGN: MANY VERSIONS – ONE QUALITY.

ROLLER FREEWHEELS

These freewheels feature a cylindrical outer race and an inner race consisting of ramps on which rollers are located. Springs and plungers ensure a permanent contact between the different elements for an instant torque transmission. This rugged, reliable versatile design can be used as an overrunning clutch, indexing clutch or backstop.

Note: the highest overrunning speed is possible if the outer race is overrunning. For this reason it is particularly adapted to high speed overrunning clutch application for dual drivers.

This design is recommended for use as an indexing clutch. To maximise accuracy, specify »V« type, fitted with stronger springs.

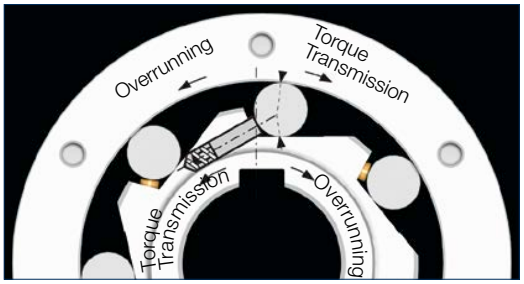

1 Outer race 2 Sprag 3 Inner race

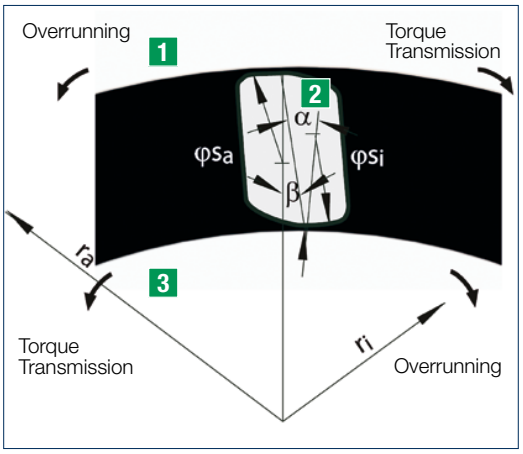

SPRAG FREEWHEELS

In this type of freewheel, the two races are cylindrical. The sprags, fitted in a cage, feature an active profile that ensures engagemant or disengagement according to the relative motion of the races.

It is possible to adapt the design of sprags and cage to get significantly different characteristics from one model to another. For example, models which have permanent contact or are contact free during overrunning, are available.

DC DESIGN

This model features a large number of sprags controlled by two concentric cages. The transmitted torque is high compared to the required space. Sprags are synchronised by the double cage design, and individually energized by a special spring.

In addition to the DC series offered in this catalog, the CSK, GFK, and RSBW ranges use a similar principle.

1 Outer race 2 Cage 3 Spring 4 Sprag 5 Inner race

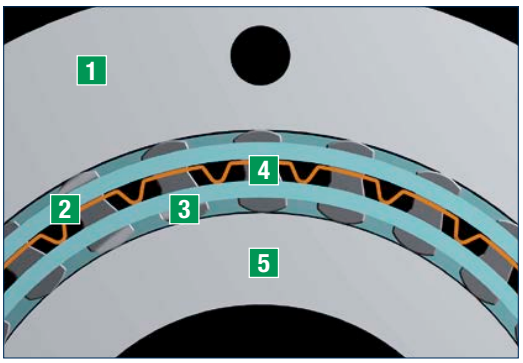

RSCI, RIZ DESIGN

Sprags in this design, are fitted into a cage connected to the overrunning member. The sprag configuration is such that its center of gravity is offset to its rotation axis.

Centrifugal force creates a lift off moment against an engaging spring. When the centrifugal force moment is greater than that of the spring, the sprag tilts over to a contact free position.

The sprag height and its active profile length allow this type of freewheel to accept significant eccentricity tolerances and to work with all the current lubricants used in power transmissions.

Torque transmission

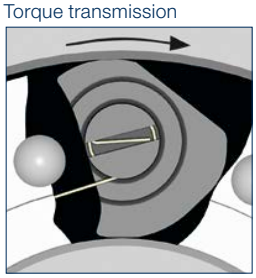

Overrunning

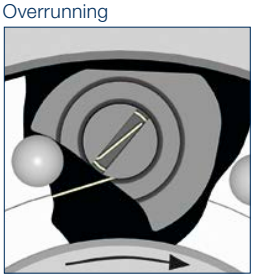

STIEBER SOLUTIONS: ALWAYS THE RIGHT CHOICE.

Unit selection is initially determined by the type of application: OC Overrunning clutch, IC Indexing clutch, BS Backstop. Different technical information is required for each one of them. Mounting details and lubrication requirements finally determine the unit selected.

The information required for each type of application is as follows:

OVERRUNNING CLUTCH

- Type of motor
- Nm start/Nm nominal of E-motors
- Internal combustion engines, please consult Stieber
- Nominal driving torque
- Range of driving speed
- Inertia „J“ of the driven masses
- Range of overrunning speed
- Number of start during service life
- Shaft diameter

INDEXING CLUTCH

- Number of cycles/min
- Index angle
- Nominal torque
- Inertia „J“ of the driven masses
- Accelerations of the driving member
- Number of indexes during service life
- Shaft diameter

BACKSTOP

- Static reverse torque
- Maximum dynamic reverse torque due to elasticity of the locked parts (elastic belts, shafts more than 3 meters long)
- Range of overrunning speed
- Number of torque applications during service life
- Shaft diameter

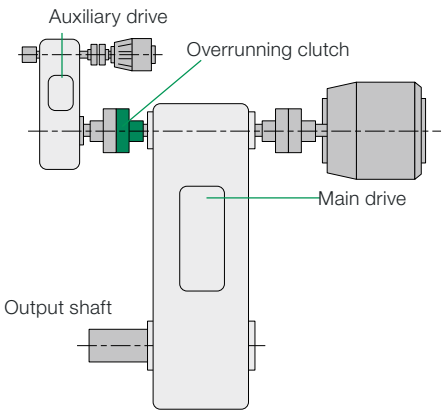

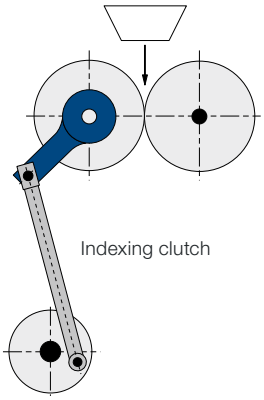

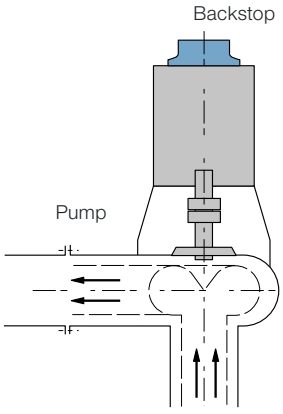

THE SELECTION PROCEDURE: WE ADVISE, YOU DECIDE.

If we have the data described on the previous page, Stieber can make the most accurate selection.
If all of the information is not available, or if you want to make a selection yourself, the following service factor procedure may be used.

Note: The following method and the service factors used are only a guide based on experience and cannot cover all situations. We cannot accept responsibility for incorrect selection resulting from the use of these tables.

STEP 1 TORQUE SELECTION

The first step is to calculate the catalogue torque (T_{KN}) of the unit to be chosen. This torque is derived from the application nominal torque (T_{appl}) multiplied by a service factor (S.F.) depending on the function of the freewheel and working conditions.

Nominal torque of the application:

$$T_{appl}\,(Nm) = \frac{9550 \times P\,(kW)}{n\,(min^{-1})}$$

The catalogue torque will be:

T_{KN} N $T_{appl} \times$ S.F.

S.F. (service factor) can be read from the selection tables on page 8.

Note: All the units shown in this catalog can support a maximum torque equal to 2 times the catalogue torque T_{KN} indicated in the respective data tables.

The following curve may be used as a guide to determine the relationship between torque transmitted and the number of cycles (applications of this torque) the unit would withstand in its life time. Average values are shown.

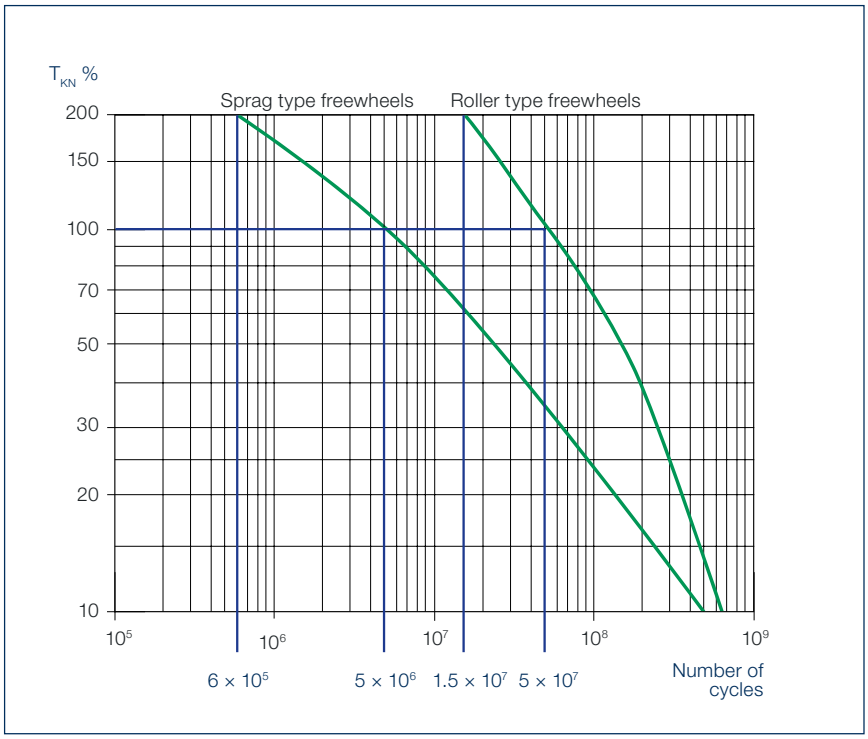

SERVICE FACTORS.

APPLICATION INDEXING

Indexing speed	Type of freewheel	
	Roller type	Sprag type
Over 150 strokes/min	3.0	4.0
Angle > 90° | Over 100 strokes/min	2.5	4.0
Angle > 90° | Less than 100 strokes/min	2.0	3.5

APPLICATION BACKSTOP

Driving machine	Driven machine				
	Elastic conveyor belts with risk of jam	Pump drives with more than 5 metres shaft	Fans	Other machines	
				No overloads	Dynamic overloads
Motors with hydraulic couplings	1.3	1.6	0.5	1.0	1.5
Asynchronous motors with direct start[1]	1.6	1.6	0.5	1.0	1.5
Steam or gas turbine	—	1.6	0.5	1.0	1.5
Internal combustion engine	1.6	1.6	0.5	1.0	1.5

1) These values do not cover a motor start in the wrong direction.

APPLICATION OVERRUNNING

Driving machine		Working conditions			
		Starting torque not higher than nominal Smooth drive.	Starting torque up to 2 times running torque. Moderate load variations.	Starting torque 2 to 3 times running torque. Load variations.	High starting torque. High load torque variations.
DC - motor. AC - motor with soft start or hydraulic coupling		1.3	1.5	1.8	—
Asynchronous motor with direct start	Speed reduction between motor & freewheel < 20	—	2.5	3.0	4.0
	Speed reduction between motor & freewheel > 20	—	1.5	2.5	3.5
Steam or gas turbine		1.3	1.5	—	—
Internal combustion Eninge	Petrol 4 cyl.or Diesel < 6 cyl.	4.0	5.0	Contact Stieber.	—
	Diesel N 6 cyl.	5.0	6.0	Contact Stieber.	—

STEP 2 MODEL SELECTION

When the catalogue torque is known, the model will be selected from the following criteria:

- Built-in or self-contained design
- Driving and overrunning speed limits
- Dimensions
- Lubrication and maintenance

Please refer to the selection table page 10 for a guide to selection. The product range is presented in this order:

SELF-CONTAINED BALL BEARING UNITS (CSK RANGE)

General purpose, economical units for light applications. Grease lubricated, maintenance free. With or without key(s) mounting to shaft and housing.

BUILT-IN UNITS

Roller types with inner and outer races (A-series) or only a cage (DC sprag series). Bearing support, lubrication and maintenance must be provided.

SELF-CONTAINED UNITS

- Low speed, grease lubricated, maintenance free (RSBW, AV series).
- Medium overrunning speed inner race. High overrunning speed outer race. Roller types, oil lubricated (AL, GFR series).
- High overrunning speed inner race. Medium overrunning speed outer race. Sprag types, oil or grease lubricated (SMZ, FS, FSO series).
- High speed, high power, for continuous duty encased overrunning clutches (AL..G, CEUS.., BC..MA series).

CENTRIFUGAL LIFT OFF SPRAG TYPES

Special overrunning clutches and backstops contact free during overrunning. Please be aware of the speeds permissible in driving and overrunning modes.

- Built-in units: Low lubrication requirement. Accept a large range of lubricants (RSCI series).
- Self-contained units: Grease lubricated, long life and maintenance free (RIZ series).

Selection Table

Types	Applications groups	Type of support	OC	IC	BS
CSK	Integral bearing/ freewheel based on series 62, 60 and 59	Bearing support	●	●	●
CSK..2RS			●	●	●
CSK..P. CSK..PP			●	●	●
CSK..P-2RS			●	●	●
ASK			●	●	●
GFK			●	●	●
AS (NSS)	Built-in freewheels: Must be integrated in a housing that provides bearing support and lubrication. Low to medium torque and speeds.	No bearing support	●	●	●
ASNU (NFS)			●	●	●
AE			●	●	●
AA			●	●	●
NF			●	●	●
S200			●		●
DC			●	●	●
DC Races			●	●	●
NFR		Bearing support	●	●	●
RSBW	Self-contained clutches: Sealed, with integral lubrication. From small to high torques, low to max speeds. Applications in all types of industry.	Bearing support			●
AV				●	●
GFR-GFRN			●	●	●
GFR..F1F2/F2F7			●	●	●
GFRN..F5F6			●	●	●
GFR..F2F3					●
GFR..F3F4					●
AL/ALP			●	●	●
AL..F2D2			●	●	●
AL..F4D2			●	●	●
ALP..F7D7			●	●	●
AL..KMSD2			●		
AL..KEED2			●		
SMZ			●	●	●
FSO 300-700			●	●	●
FSO 750-1027			●	●	●
AL..G			●		
CEUS			●		
BC MA					●
RDBR-E					●
RSCI 20-130	Centrifugally lift off sprags: Wear free above a given speed. High speeds with little lubrication demand. Specifically designed for: gear reducers, motors, pumps, ventilators, turbines.	No bearing support	●		●
RSCI 180-300			●		●
RSXM			●		●
RSRV					●
RSRT					●
RDBK					●
RDBK-H					●
RIZ-RINZ		Bearing support	●		●
RIZ..G1G2/G2G7			●		●
RINZ..G5G5			●		●
RIZ..G2G3					●
RIZ..G3G4					●
RIZ..ESG2			●		
RIZ..ELG2			●		

OC = Overrunning Clutch | IC = Indexing Clutch | BS = Backstop | ● = Special Working Conditions

		Bore range-diameter	Torque range	Overruning Speed inner race	Overrunning Speed outer race	Lubrication	Page
		mm	Nm				
		8–40	2,5–325	H	H	GREASE	14
		12–40	2,5–325				14
		12–40	9,3–325				16
		12–40	9,3–325				16
		40–60	72–250				18
		20–45	51–370				20
		6–80	2,1–1 063	M	H	OIL	22
		8–200	12–44 500				24
		12–70	17–5813				26
		12–250	17–225000				28
		8–150	20–44 375				30
		16–56	45–850				32
		15–80	63–4 875	H	M		34
							36
		8–130	20–34 750	M	H		38
		20–90	375–4 875	S	not possible	GREASE	40
		20–120	265–11 000				42
		12–150	55–70 000	M	H	OIL	44
		12–150	55–70 000				46
		12–150	55–70 000				46
		12–150	55–70 000		not possible		48
		12–150	55–70 000				48
		12–250	55–287 500		H		50
		12–250	55–287 500				52
		12–250	55–287 500				54
		12–250	55–287 500				54
		12–120	50–20 000				56
		12–250	55–250 000				58
		20–70	300–4 300	H	H	OIL GREASE	60
		12–82	379–6 900				62
		57–177	9660–36 612				64
		38–160	500–70 000	not possible	H	OIL	66
		40–180	680–81 350				68
		165–600	36 000–1 626 000	S	not possible		70
		150–320	50000–330000				72
		20–130	212–15 750	H	not possible	OIL GREASE	74
		180–300	31 500–250 000				76
		20–70	100–1950				78
		50–190	1400–30 000				80
		50–190	1400–30 000				80
		60-300	5500-180 000				82
		60-300	5500-180 000				82
		30–130	375–23 000	H	not possible	GREASE	82
		30–130	375–23 000				86
		30–130	375–23 000				86
		30–130	375–23 000				88
		30–130	375–23 000				88
		30–130	80–20 000				90
		30–130	375–23 000				92

H = high speed | M = middle speed | S = low speed

MOUNTING INSTRUCTIONS: SO THAT IT FITS.

KEY ASSEMBLIES

For all freewheel inner races connected to shaft by a key, our standard bore tolerance is H7, with keyway to JS10. If no other indication we recommend a shaft tolerance of h6 or j6. For maximum indexing accuracy, adjusted keys should be machined to give no clearance.

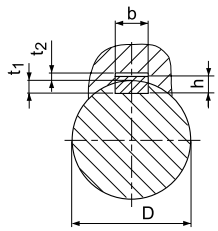

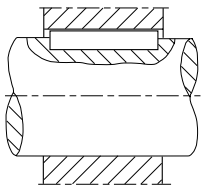

Bore size	DIN 6885* I Sheet 1				DIN 6885* I Sheet 3			
	$b^{JS\,10}$	h	t_1	t_2	$b^{JS\,10}$	h	t_1	t_2
> 6–8	2 ± 0.020	2	1.2 + 0.1	1 + 0.3				
> 8–10	3 ± 0.020	3	1.8 + 0.1	1.4 + 0.3				
> 10–12	4 ± 0.024	4	2.5 + 0.1	1.8 + 0.3				
> 12–17	5 ± 0.024	5	3 + 0.1	2.3 + 0.3	5 ± 0.024	3	1.9 + 0.1	1.2 + 0.3
> 17–22	6 ± 0.024	6	3.5 + 0.1	2.8 + 0.3	6 ± 0.024	4	2.5 + 0.1	1.6 + 0.3
> 22–30	8 ± 0.029	7	4 + 0.2	3.3 + 0.4	8 ± 0.029	5	3.1 + 0.1	2 + 0.3
> 30–38	10 ± 0.029	8	5 + 0.2	3.3 + 0.4	10 ± 0.029	6	3.7 + 0.2	2.4 + 0.3
> 38–44	12 ± 0.035	8	5 + 0.2	3.3 + 0.4	12 ± 0.035	6	3.9 + 0.2	2.2 + 0.3
> 44–50	14 ± 0.035	9	5.5 + 0.2	3.8 + 0.4	14 ± 0.035	6	4 + 0.2	2.1 + 0.3
> 50–58	16 ± 0.035	10	6 + 0.2	4.3 + 0.4	16 ± 0.035	7	4.7 + 0.2	2.4 + 0.3
> 58–65	18 ± 0.035	11	7 + 0.2	4.4 + 0.4	18 ± 0.035	7	4.8 + 0.2	2.3 + 0.3
> 65–75	20 ± 0.042	12	7.5 + 0.2	4.9 + 0.4	20 ± 0.042	8	5.4 + 0.2	2.7 + 0.3
> 75–85	22 ± 0.042	14	9 + 0.2	5.4 + 0.4	22 ± 0.042	9	6 + 0.2	3.1 + 0.4
> 85–95	25 ± 0.042	14	9 + 0.2	5.4 + 0.4	25 ± 0.042	9	6.2 + 0.2	2.9 + 0.4
> 95–110	28 ± 0.042	16	10 + 0.2	6.4 + 0.4	28 ± 0.042	10	6.9 + 0.2	3.2 + 0.4
> 110–130	32 ± 0.050	18	11 + 0.3	7.4 + 0.4	32 ± 0.050	11	7.6 + 0.2	3.5 + 0.4
> 130–150	36 ± 0.050	20	12 + 0.3	8.4 + 0.4	36 ± 0.050	12	8.3 + 0.2	3.8 + 0.4
> 150–170	40 ± 0.050	22	13 + 0.3	9.4 + 0.4				
> 170–200	45 ± 0.050	25	15 + 0.3	10.4 + 0.4				
> 200–230	50 ± 0.050	28	17 + 0.3	11.4 + 0.4				
> 230–260	56 ± 0.060	32	20 + 0.3	12.4 + 0.4				
> 260–290	63 ± 0.060	32	20 + 0.3	12.4 + 0.4				
> 290–330	70 ± 0.060	36	22 + 0.3	14.4 + 0.4				

*) Keyway tolerances for hardened parts are not given in DIN6885.

PRESS FIT ASSEMBLIES

Shaft and bore tolerances are specified on the pages for each type where press fitting is appropriate.

As with standard bearings, suitable tooling must be used for press fitting such that no axial load is transmitted through the inner part of the freewheel during assembly.

BOLT ASSEMBLIES

In freewheel technology torque is often transmitted through bolts. Experience has shown that it is a practical and reliable way since freewheels transmit torque in only one direction.

Bolt quality and tightening torques to use are as follows:

Thread	Strength standard			
	8.8		10.9	
	Type	[Nm]	Type	[Nm]
M5	RSCI	6	AA AL FSO GFR HPI RIZ	8
M6		10		14
M8		25		34
M10		48		68
M12		84		118
M16		206		290
M20		402		550
M24		696		950
M30		1420		1900

RUN-OUT

Permitted run-out tolerances for the mounting of non self supported roller freewheels AA, AE, AS, ASNU, KI and NF (see table on the bottom right).

In order to maintain these limits, ball bearings with standard clearance must be installed adjacent to the freewheel. The permitted run-out for sprag type freewheels DC, RSCI and S200 are given in their respective tables.

Bores-diameter [mm]	AA, AE, AS, ASNU, KI, NF	
	Runout TIR	Squareness TIR
4–8	0.020	0.02
10–17	0.035	0.03
20–50	0.060	0.03
55–100	0.100	0.03
110–150	0.160	0.03

LUBRICATION & MAINTENANCE: NOW LET'S LOOK AFTER IT.

Oil	Operating −20°C to +20°C Ambient −40°C to −15°C	Operating +10°C to +50°C Ambient −15°C to +15°C	Operating +40°C to +70°C Ambient +15°C to +30°C	Operating +50°C to +85°C Ambient +30°C to +50°C	Grease
DIN ISO 3448 mm²/s	10	22	46	100	
ARAL	SUMOROL CM10	SUMOROL CM22	SUMUROL CM 46 MOTANOL HE 46	DEGOL CL 100 T MOTANOL HE 100	ARALUB HL2
bp	ENERGOL CS10	ENERGOL CS22	ENERGOL CS 46 ENERGOL RC-R 46	ENERGOL CS 100 ENERGOL RC 100	ENERGREASE LS2
Castrol	–	–	AIRCOL PD 46	AIRCOL PD 100	SPHEEROL MP 2
Esso	SPINESSO 10	SPINESSO 22	TERESSTIC T46	NUTO 100	UNIREX N2
FUCHS	RENOLIN MR3	RENOLIN DTA22	RENOLIN DTA46	RENOLIN MR30	RENOLIT LZR2
KLÜBER LUBRICATION	ISOFLEX PDP 38	ISOFLEX PDP 48	LAMORA HLP 46	LAMORA 100	POLYLUB WH2 Klübersynth BM 44–42
Mobil	VELOCITE No 6	VELOCITE No 10	MOBIL DTE 798	MOBIL DTE OIL HEAVY	POLYREX EM
Shell	MORLINA 10	MORLINA 22	MORLINA 46	MORLINA 100	ALVANIA RL2
TOTAL	AZZOLA ZS10	AZZOLA ZS22	AZZOLA ZS46	AZZOLA ZS100	MULTIS 2

Alternatively we strongly recommend the use of multigrade oil SAE 10W-40 at working temperature between 0°C and +80°C.

OIL

The oil lubricated freewheels from this catalog are delivered lubricated with a VG 32 oil viscosity if they are sealed, self-contained units (except ALP..F7D7, GFRN.. F5F6 and GFR..F3F4).

Other freewheels are delivered without lubricant, other than a protection against corrosion. Before putting a unit into operation, it is necessary to remove the anti corrosive fluid and to fill the unit with appropriate oil.

Generally, for a horizontally mounted unit, the correct oil level is 1/3 of the internal clutch height unless specified. (For vertically mounted units please contact us). Correct lubricants to use are given in the lubrication chart.

Oils including graphite, molybdenum and EP additives should be avoided. This chart is for guidance only. In the case of low or high overrunning speeds, or limiting temperatures, please contact our technical department.

Initially change the oil after 10 hours of operation. Afterwards change lubricant every 2000 hours and every 1000 hours in a dirty environment. Oil level and oil condition as well as rotating seals should be checked regularly. For working temperatures below -40°C and above +100°C, please contact us. If grease lubrication is the only option for one of these types, we recommend you contact our technical department for approval.

GREASE

A number of models have been designed specially for grease lubrication as standard (see page 10–11).
In this case, the unit will always be delivered lubricated, ready for mounting either in horizontal or vertical position. The grease used is a long life type, with high thermal and chemical stability.

Unless specified, no maintenance is required. To increase the service life of units we recommend to remove, clean, inspect and re-grease them after two years of operation.

Note: Unlike all other designs, sprag types RSCI and DC version-N can work with all the current lubricants used in power transmissions.

Combined Bearing/Freewheel

CSK
CSK..2RS

TYPE

Type CSK is a sprag type freewheel integrated into a 62 series ball bearing (except sizes 8 and 40). It is bearing supported, delivered grease lubricated and protected against dust of more than 0,3 mm. The use of additional “nylos” type seals is recommended especially when the working temperature exceeds 50°C. Oil bath lubrication is also possible.

All the CSK versions are equipped with “formchromed” sprags. This process increases several times the overrunning life time. Torque transmission is ensured by a press fit assembly into a rigid steel housing with N6 tolerance, and onto a shaft with n6 tolerance. For this reason, the initial bearing radial clearance is set at C5.

Please contact us when either the ambient or the operating temperature is not within the range +5°C to +60°C. CSK..2RS is 5 mm wider but is equipped with lip seals to be water splash resistant.

CSK, CSK..2RS

CSK

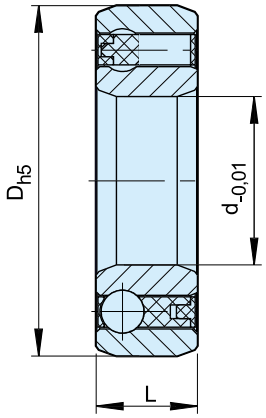

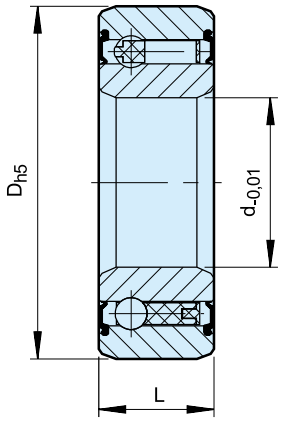

CSK..2RS

Type	Size	Bearing series					Bearing loads dynamic	Bearing loads static	Weight	Drag torque
	d [mm]		T_{KN} 1) [Nm]	n_{max} [min⁻¹]	D [mm]	L [mm]	C [kN]	C_0 [kN]	[kg]	T_R [Ncm]
CSK (KK)	8*	–	2,5	15000	22	9	3,28	0,86	0,015	0,5
	12	6201	9,3	10000	32	10	6,1	2,77	0,04	0,7
	15	6202	17	8400	35	11	7,4	3,42	0,06	0,9
	17	6203	30	7350	40	12	7,9	3,8	0,070	1,1
	20	6204	50	6000	47	14	9,4	4,46	0,110	1,3
	25	6205	85	5200	52	15	10,7	5,46	0,140	2,0
	30	6206	138	4200	62	16	11,7	6,45	0,210	4,4
	35	6207	175	3600	72	17	12,6	7,28	0,300	5,8
	40	–	325	3000	80	22	15,54	12,25	0,5	7,0
CSK..2RS	8**		2,5	15000	22	9	3,28	0,86	0,015	0,8
	12	–	9,3	10000	32	14	6,1	2,77	0,05	3,0
	15		17	8400	35	16	7,4	3,42	0,070	4,0
	17		30	7350	40	17	7,9	3,8	0,09	5,6
	20		50	6000	47	19	9,4	4,46	0,145	6,0
	25		85	5200	52	20	10,7	5,46	0,175	6,0
	30		138	4200	62	21	11,7	6,45	0,270	7,5
	35		175	3600	72	22	12,6	7,28	0,400	8,2
	40	–	325	3000	80	27	15,54	12,25	0,6	10

NOTES

1) $T_{max} = 2 \times T_{KN}$
» Refer to Selection page 7 to 11

*) One Z seal on the bearing side only. Looking from this side, the outer race runs free in the counterclockwise direction

**) Only one RS seal on the ball bearing side looking from this side, the outer race runs free in the counterclockwise direction

» Refer to mounting and maintenance instructions page 12 to 13

MOUNTING EXAMPLES

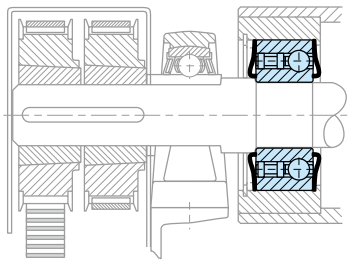

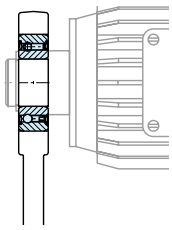

CSK..P, CSK..PP
CSK..P-2RS

TYPE

CSK..P

CSK..PP

Types CSK..P and CSK..PP are sprag type freewheels integrated into 62.. series ball bearings (except size 40). They are bearing supported, delivered grease lubricated and protected against dust of more than 0,3 mm.

The use of additional “nylos” type seals is recommended especially when the working temperature exceeds 50°C. Oil bath lubrication is also possible.

In addition to the basic CSK model, type CSK..P features a keyway on the inner race. For this reason it can be keyed to a shaft to k6 tolerance. The outer race must still be pressed into a rigid steel housing to N6 tolerance.

CSK..PP features a keyway on both the inner and outer race. The recommended mounting tolerances are h6 on the shaft and H6 in a rigid housing. Please contact us when either the ambient or the operating temperature is not within the range +5°C to +60°C.

CSK..P, CSK..PP, CSK..P-2RS

CSK..P

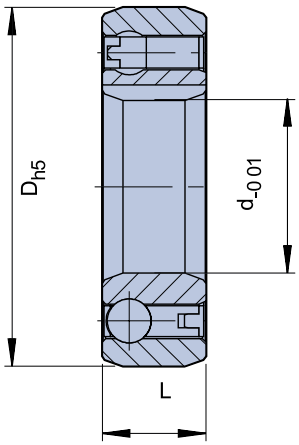

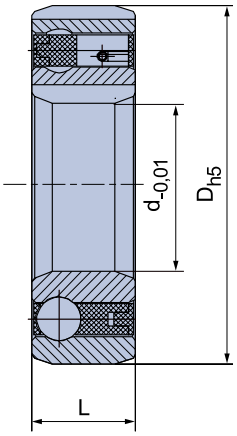

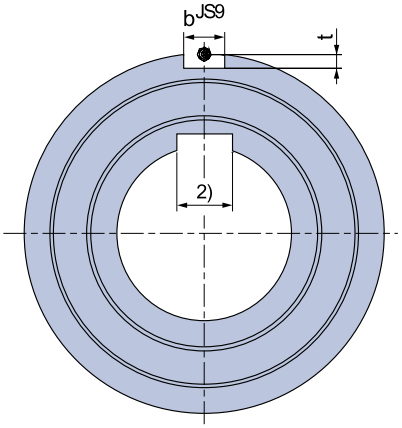

CSK..PP

Type	Size	Bearing series							Bearing loads dynamic	Bearing loads static	Weight	Drag torque
	d [mm]		T_{KN} 1) [Nm]	n_{max} [min⁻¹]	D [mm]	L [mm]	b [mm]	t [mm]	C [kN]	C_0 [kN]	[kg]	T_R [Ncm]
CSK..P 2)	12	6201	9,3	10000	32	10			6,1	2,77	0,04	0,7
	15	6202	17	8400	35	11			7,4	3,42	0,06	0,9
	17	6203	30	7350	40	12			7,9	3,8	0,070	1,1
	20	6204	50	6000	47	14			9,4	4,46	0,110	1,3
	25	6205	85	5200	52	15			10,7	5,46	0,140	2,0
	30	6206	138	4200	62	16			11,7	6,45	0,210	4,4
	35	6207	175	3600	72	17			12,6	7,28	0,300	5,8
	40	–	325	3000	80	22			15,54	12,25	0,5	7,0
CSK..PP 2)	15	6202	17	8400	35	11	2	0,6	7,4	3,42	0,06	0,9
	17	6203	30	7350	40	12	2	1,0	7,9	3,8	0,070	1,1
	20	6204	50	6000	47	14	3	1,5	9,4	4,46	0,110	1,3
	25	6205	85	5200	52	15	6	2,0	10,7	5,46	0,140	2,0
	30	6206	138	4200	62	16	6	2,0	11,7	6,45	0,210	4,4
	35	6207	175	3600	72	17	8	2,5	12,6	7,28	0,300	5,8
	40	–	325	3000	80	22	10	3,0	15,54	12,25	0,5	7,0
CSK..P-2RS 2)	12	–	9,3	10000	32	14			6,1	2,77	0,05	3
	15	–	17	8400	35	16			7,4	3,42	0,07	4
	17	–	30	7350	40	17			7,9	3,8	0,09	5,6
	20	–	50	6000	47	19			9,4	4,46	0,145	6,0
	25	–	85	5200	52	20			10,7	5,46	0,175	6,0
	30	–	138	4200	62	21			11,7	6,45	0,270	7,5
	35	–	175	3600	72	22			12,6	7,28	0,4	8,2
	40	–	325	3000	80	27			15,54	12,25	0,6	10

NOTES

1) $T_{max} = 2 \times T_{KN}$
» Refer to Selection page 7 to 11

2) Keyway to DIN 6885.3
Size 40 keyway to DIN 6885.1

» Refer to mounting and maintenance instructions page 12 to 13

MOUNTING EXAMPLE

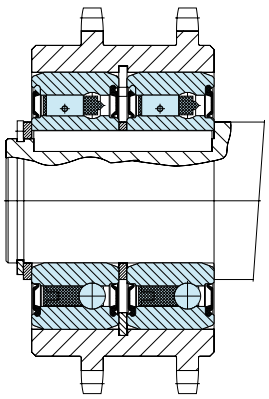

ASK

TYPE

Type ASK is a roller type freewheel bearing supported by two rows of roller bearings. It is a self-contained dust protected unit, delivered grease lubricated.

Nominal outside dimensions are the same as a 60.. series bearing. Torque transmission must be ensured by a press fit on both the inner and outer race. Because of this press fit, the standard radial clearance is C4. The interference tolerances are on the freewheel dimensions, allowing a direct mounting in a standard series 60.. bearing location: Shaft tolerance should be h6 or j6 The outer race should be pressed into a rigid housing to K6 tolerance.

Radial bearing load capacities are given in the table. Type ASK freewheels can not accept axial loading. In cases of such loads, thrust bearings must be provided.

ASK

ASK

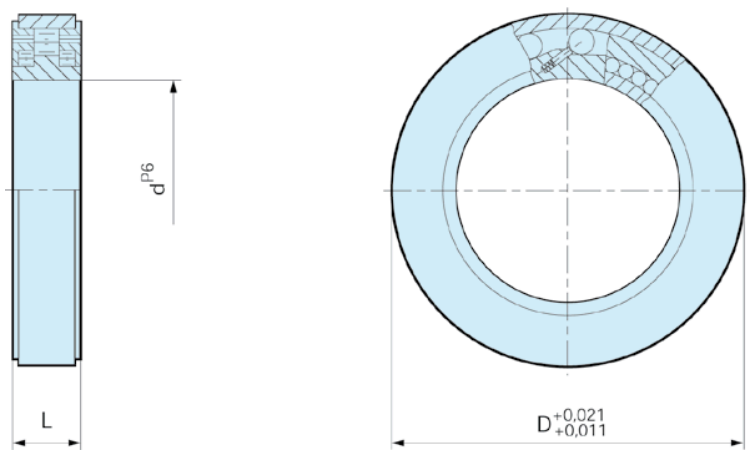

Type	Size	Bearing series					Bearing loads dynamic	Bearing loads static	Weight	Drag torque
	d^{P6} [mm]		T_{KN} 1) [Nm]	n_{max} [min⁻¹]	D [mm]	L [mm]	C [kN]	C_0 [kN]	[kg]	TR [Ncm]
ASK	40	6008	72	3500	68	15	16	20,6	0,25	15
	50	6010	125	2200	80	16	19,6	23,5	0,34	20
	60	6012	250	1800	95	18	25,3	35,1	0,5	25

NOTES

1) $T_{max} = 2 \times T_{KN}$
» Refer to Selection page 7 to 11

» Refer to mounting and maintenance instructions page 12 to 13

MOUNTING EXAMPLE

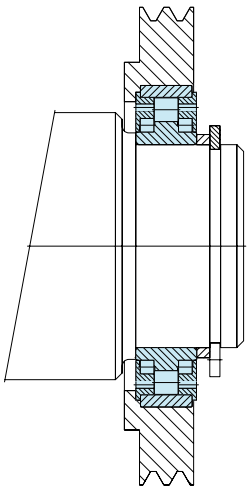

GFK

TYPE

Type GFK is a sprag type freewheel integrated into a 59.. series ball bearing. This design provides high torque capacity for minimal outside diameter. It is a bearing supported type, delivered grease lubricated.

Oil bath lubrication is also possible. Whatever the lubrication type, seals should be provided, as illustrated on the next page.

Torque transmission must be ensured by a press fit assembly into a rigid outer housing with R6 tolerance, and onto a shaft with p5 tolerance.

Initial radial clearance has been provided to take into account this heavy press fit. Operating temperature range: –20°C to +100°C. Peaks up to +120°C are acceptable for short periods. Please contact us for higher temperatures.

GFK

GFK

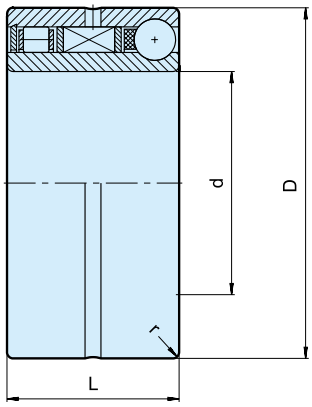

Type	Size		Overrunning speeds		Bearing series	Loads							Weight
						Rollers dyn.	Balls dyn.	Rollers stat.	Balls stat.				
	d [mm]	T_{KN} 1) [Nm]	n_{imax} 2) [min⁻¹]	n_{amax} 3) [min⁻¹]		C [N]	C [N]	C_0 [N]	C_0 [N]	D [mm]	L [mm]	r [mm]	[kg]
GFK	20	51	5500	4000	5904	5600	4400	2900	2750	37	23	0,5	0,09
	25	65	5300	3800	5905	6300	5300	3450	3350	42	23	0,5	0,11
	30	95	5000	3500	5906	7700	5500	4600	3650	47	23	0,5	0,13
	35	204	4600	3200	5907	8200	8500	5200	5700	55	27	1	0,20
	40	315	4200	3000	5908	8650	9300	5750	6700	62	30	1	0,30
	45	370	3800	2500	5909	9200	9700	6350	7300	68	30	1	0,34

NOTES

1) $T_{max} = 2 \times T_{KN}$
» Refer to Selection page 7 to 11

2) Inner race overruns

3) Outer race overruns

» Refer to mounting and maintenance instructions page 12 to 13

MOUNTING EXAMPLE

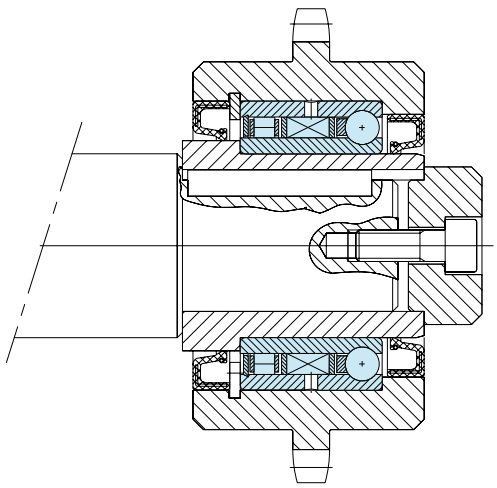

AS

TYPE

Type AS is a roller type freewheel non-bearing supported. Bearings are required to support axial and radial loads. Lubrication and sealing must also be provided by the installation. Nominal outside dimensions are the same as series 62.. ball bearings.

A typical arrangement is to install this type alongside a series 62 bearing within the same location tolerances, as shown on the following page.

The inner race is keyed to the shaft (except 6 mm bore). The outer race has a positive R6 tolerance to give a press fit in a H7 housing. The outer housing must be strong enough to not expand after assembly. This design can accept an axial misalignment of inner and outer race of ± S/2.

AS

AS

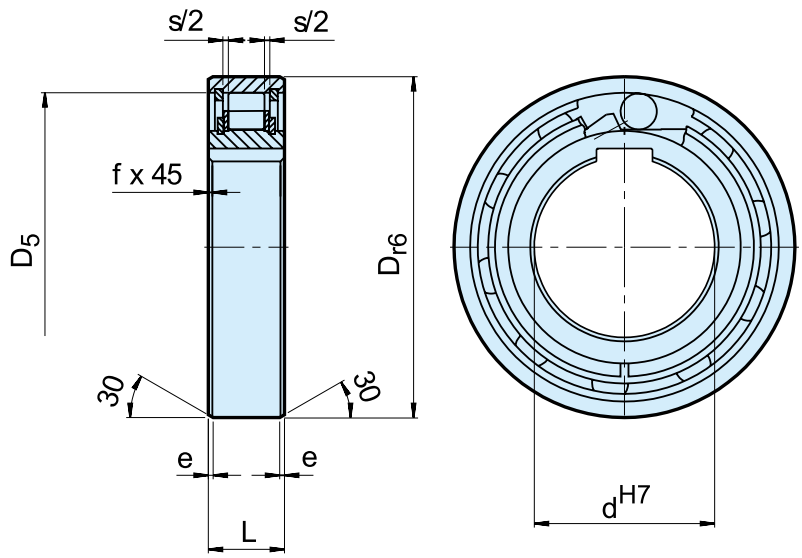

Type	Size		Overrunning speeds								Weight	Drag torque
	d^{H7} [mm]	T_{KN} 1) [Nm]	n_{imax} 2) [min⁻¹]	n_{amax} 3) [min⁻¹]	D_{r6} [mm]	D_5 [mm]	L [mm]	s [mm]	e [mm]	f [mm]	[kg]	T_R [Ncm]
AS (NSS)	6	2,10	5000	7500	19	15,8	6	0,3	0,6	0,3	0,01	0,18
	8	3,8	4300	6500	24	20	8	1,3	0,6	0,6	0,02	0,24
	10	6,8	3500	5200	30	25,9	9	1,3	0,6	0,6	0,03	0,36
	12	13	3200	4800	32	28	10	1,3	0,6	0,6	0,04	0,48
	15	14	2800	4300	35	31	11	1,4	0,6	0,6	0,05	0,70
	20	40	2200	3300	47	40	14	2,4	0,8	0,8	0,12	1,4
	25	56	1900	2900	52	45,9	15	2,4	0,8	0,8	0,14	2,4
	30	90	1600	2400	62	55	16	2,4	0,8	1	0,22	7,8
	35	143	1300	2000	72	64	17	2,5	0,8	1	0,31	9,0
	40	185	1200	1800	80	72	18	2,5	0,8	1	0,39	10
	45	218	1000	1600	85	77	19	2,5	1,2	1	0,44	11
	50	230	950	1500	90	82	20	2,5	1,2	1	0,49	13
	55	308	800	1300	100	90	21	2,5	1,2	1	0,66	14
	60	508	700	1100	110	100	22	2,5	1,2	1,5	0,81	26
	80	1063	600	900	140	128	26	2,5	1,2	1,5	1,41	58

NOTES

AS6 without keyway. ØD = $^{-0}_{-0,009}$
AS8-12 keyway to DIN 6885.1,
other sizes to DIN 6885.3

1) $T_{max} = 2 \times T_{KN}$
» Refer to Selection page 7 to 11

2) Inner race overruns

3) Outer race overruns

Mounting dimensions are identical to ball bearings series 62.
» Refer to mounting and maintenance instructions page 12 to 13

MOUNTING EXAMPLE

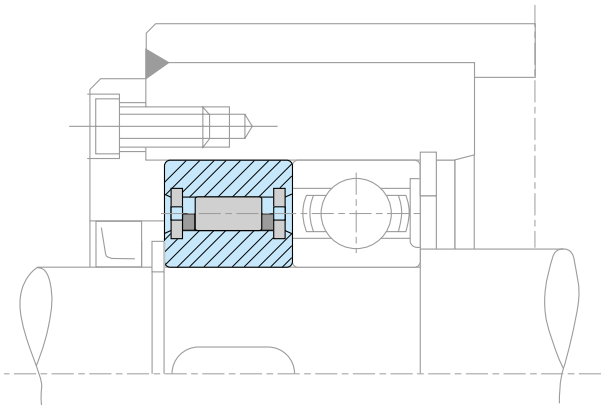

ASNU

TYPE

Type ASNU is a roller type freewheel non-bearing supported. Bearings are required to support axial and radial loads. Lubrication and sealing must also be provided by the installation. Nominal outer diameter is the same as a series 63.. ball bearing.

A typical arrangement is to install this type alongside a bearing within the same location tolerances, as shown on the following page. The inner race is keyed to the shaft. The outer race has positive n6 tolerance, to give a press fit in a H7 housing. Additional side notches in the outer race provide for positive torque transmission.

If the housing is to K6 tolerance, use of the notches is not necessary, but the housing must be strong enough to not expand after assembly. This design can accept an axial misalignment of inner and outer race of ± S/2.

ASNU

ASNU

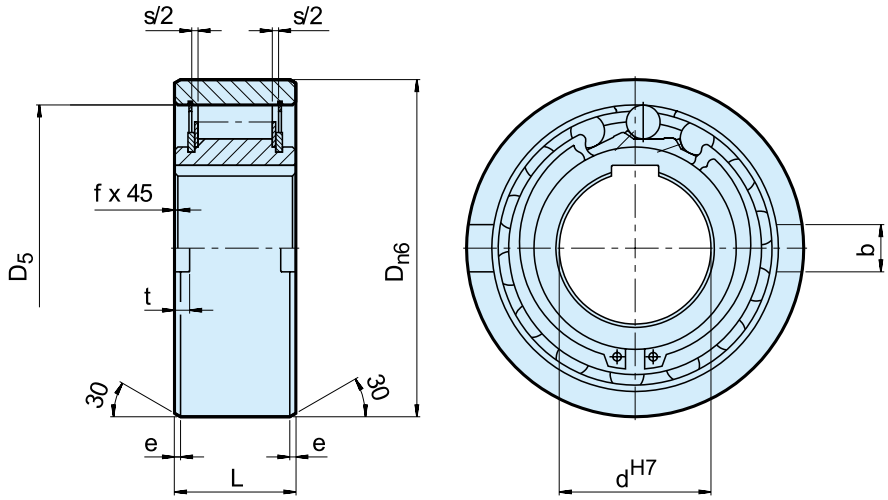

Type			Overrunning Speeds										Weight	Drag Torque
	d^{H7} [mm]	T_{KN} 1) [Nm]	n_{imax} 2) [min⁻¹]	n_{amax} 3) [min⁻¹]	D_{n6} [mm]	D_5 [mm]	L [mm]	b [mm]	t [mm]	s [mm]	e [mm]	f [mm]	[kg]	T_R [Ncm]
ASNU	8	12	3300	5000	35	28	13	4	1,4	2,4	0,6	0,3	0,07	1,6
	12	12	3300	5000	35	28	13	4	1,4	2,4	0,6	0,3	0,06	1,6
	15	30	2400	3600	42	37	18	5	1,8	2,4	0,8	0,3	0,11	1,9
	17	49	2300	3400	47	40	19	5	2,3	2,4	1,2	0,8	0,15	1,9
	20	78	2100	3100	52	42	21	6	2,3	2,4	1,2	0,8	0,19	1,9
	25	125	1700	2600	62	51	24	8	2,8	2,4	1,2	0,8	0,38	5,6
	30	255	1400	2200	72	60	27	10	2,5	2,4	1,8	1	0,54	14
	35	383	1200	1900	80	70	31	12	3,5	2,4	1,8	1	0,74	16
	40	538	1100	1700	90	78	33	12	4,1	2,5	1,8	1	0,92	38
	45	780	1000	1600	100	85	36	14	4,6	2,5	1,8	1	1,31	43
	50	1013	850	1350	110	92	40	14	5,6	2,5	1,8	1	1,74	55
	60	1825	750	1050	130	110	46	18	5,5	3,6	2,6	1,5	2,77	110
	70	2300	600	950	150	125	51	20	6,9	3,6	2,6	1,5	4,16	140
	80	3275	550	850	170	140	58	20	7,5	3,6	2,6	1,5	6,09	180
	90	5325	500	750	190	160	64	20	8,0	3,6	2,6	2	8,2	230
	100	7250	450	680	215	175	73	24	8,5	3,6	2,6	2	12,6	380
	120	13500	370	550	260	215	86	28	10	3,6	2,6	2,5	22	650
	150	26625	300	460	320	260	108	32	12	3,6	3,6	2,5	42	1000
	200	44500	230	350	420	350	138	45	16	7,6	3,6	3	93	2000

NOTES

ASNU8-12, ASNU200 keyway to DIN 6885. 1, other sizes to DIN 6885.3

1) $T_{max} = 2 \times T_{KN}$
» Refer to Selection page 7 to 11

2) Inner race overruns

3) Outer race overruns

» Refer to mounting and maintenance instructions page 12 to 13

MOUNTING EXAMPLE

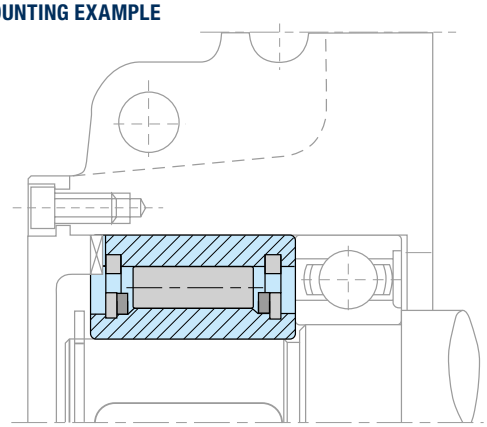

AE

TYPE

Type AE is a roller type freewheel non-bearing supported. Bearings are required to support axial and radial loads. Lubrication and sealing must also be provided by the installation. Nominal outside diameter is a standard ball bearing dimension.

A typical arrangement is to install this type beside a bearing with the same housing diameter tolerance as shown on the following page.

The inner race is keyed to the shaft. The outer race has a h6 tolerance and should be fitted in a housing with a K7 tolerance. Additional side notches provide for positive torque transmission.

If the housing tolerance is to R6, use of the notches is not necessary, but the housing must be strong enough to not expand after assembly. This design can accept an axial misalignment of inner and outer race of ± S/2.

AE

AE

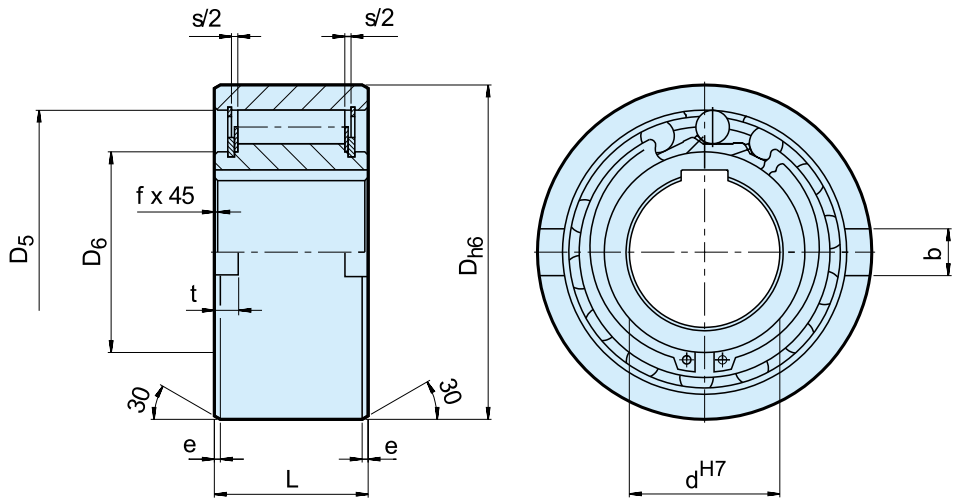

Type	Size		Overrunning speeds											Weight	Drag torque
	d^{H7} [mm]	T_{KN} 1) [Nm]	n_{imax} 2) [min⁻¹]	n_{amax} 3) [min⁻¹]	D_{h6} [mm]	D_5 [mm]	D_6 [mm]	L [mm]	s [mm]	f [mm]	e [mm]	b [mm]	t [mm]	[kg]	T_R [Ncm]
AE	12	17	3100	6000	37	28	20	20	4,5	0,5	0,8	6	3	0,11	0,7
	15	55	2300	5400	47	37	26	30	4,5	0,8	1,2	7	3,5	0,30	3,5
	20	146	2000	3600	62	50	35	34	5,5	0,8	1,2	8	3,5	0,55	8,4
	25	285	1700	2600	80	68	45	37	6,5	1	1,8	9	4	0,98	14
	30	500	1500	2100	90	75	50	44	6,2	1	1,8	12	5	1,50	23
	35	720	1300	1950	100	80	55	48	3,8	1	1,8	13	6	2,00	60
	40	1030	1200	1700	110	90	60	56	3,8	1,5	1,8	15	7	2,80	72
	45	1125	1050	1600	120	95	65	56	3,8	1,5	2,6	16	7	3,30	140
	50	2150	950	1300	130	110	75	63	5,8	1,5	2,6	17	8	4,20	180
	55	2675	850	1200	140	115	82	67	3,8	2	2,6	18	9	5,20	190
	60	3500	800	1100	150	125	90	78	7,6	2	2,6	18	9	6,80	240
	70	5813	650	900	170	140	100	95	7,6	2,5	2,6	20	9	10,5	320

NOTES

1) $T_{max} = 2 \times T_{KN}$
» Refer to Selection page 7 to 11

2) Inner race overruns

3) Outer race overruns

Keyway to DIN 6885.1
» Refer to mounting and maintenance instructions page 12 to 13

MOUNTING EXAMPLE

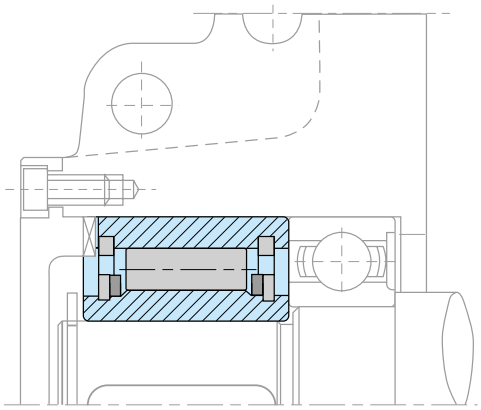

AA

TYPE

Type AA is a roller type freewheel non-bearing supported. Bearings are required to support axial and radial loads. Lubrication and sealing must also be provided by the installation.

Standard lubrication is oil. A typical installation is shown on the following page.

The inner race is keyed to the shaft. The fit for centering of the outer race must be to H7 tolerance. Connection of the outer race is via through bolts to grade 10.9 or better.

This design can accept an axial misalignment of inner and outer race of ± S/2.

AA

AA

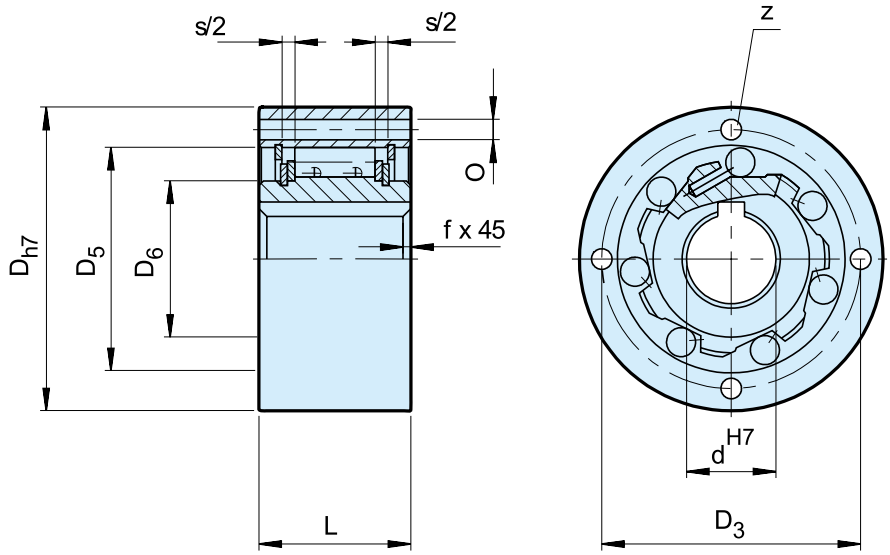

Type	Size		Overrunning speeds[4]						Number					Weight	Drag torque
	d^{H7} [mm]	T_{KN}[1] [Nm]	n_{imax}[2] [min⁻¹]	n_{amax}[3] [min⁻¹]	D_{h7} [mm]	D_5 [mm]	D_6 [mm]	D_3 [mm]	Z	O [mm]	L [mm]	f [mm]	s [mm]	[kg]	T_R [Ncm]
	12	17	3100	6200	47	28	20	38	3	5,5	20	0,5	4,5	0,21	0,7
	15	55	2300	5600	55	37	26	45	3	5,5	30	0,8	4,5	0,44	3,5
	20	146	2000	4800	68	50	35	58	4	5,5	34	0,8	5,5	0,70	8,4
	25	285	1700	4000	90	68	45	78	6	5,5	37	1	6,5	1,30	14
	30	500	1500	3400	100	75	50	87	6	6,6	44	1	6,5	2,00	23
	35	720	1300	2800	110	80	55	96	6	6,6	48	1	6,5	2,60	60
	40	1030	1200	2500	125	90	60	108	6	9	56	1,5	7,6	3,90	72
	45	1125	1050	2200	130	95	65	112	8	9	56	1,5	7,6	4,00	140
	50	2150	950	2050	150	110	75	132	8	9	63	1,5	7,6	6,00	180
AA	55	2675	850	1950	160	115	82	138	8	11	67	2	7,6	7,20	190
	60	3500	800	1800	170	125	90	150	10	11	78	2	7,6	9,20	240
	70	5813	650	1700	190	140	100	165	10	11	95	2,5	7,6	11,8	320
	80	6250	500	1500	210	160	115	185	10	11	100	2,5	7,6	15,6	330
	90	10750	400	1300	230	180	130	206	10	14	115	3	7,6	24,7	650
	100	15000	350	1150	270	210	150	240	10	18	120	3	7,6	35,8	830
	120	25000	230	900	310	240	180	278	12	18	140	4	9,6	54,3	1080
	150	57500	160	600	400	310	230	360	12	22	180	4	9,6	116	1240
	200	135000	125	460	520	400	260	460	18	26	240	5	10,6	267	3800
	250	225000	100	380	610	480	320	545	20	33	300	5	10,6	461	6100

NOTES

1) $T_{max} = 2 \times T_{KN}$
» Refer to Selection page 7 to 11

2) Inner race overruns

3) Outer race overruns

Keyway to DIN 6885.1
» Refer to mounting and maintenance instructions page 12 to 13

MOUNTING EXAMPLE

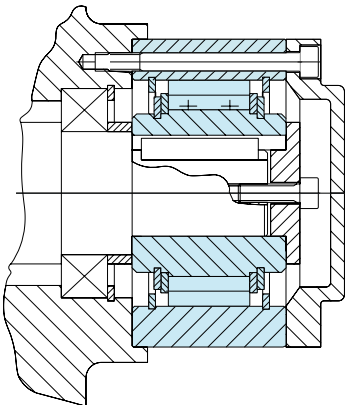

NF

TYPE

Type NF is a roller type freewheel non-bearing supported. Bearings are required to support axial and radial loads. Lubrication and sealing must also be provided by the installation.

Standard lubrication is oil. Nominal outside diameter is a standard ball bearing dimension. A typical arrangement is to install this type alongside a bearing with the same housing tolerances, as shown on the following page. The inner race is keyed to the shaft. The outer race has a positive n6 tolerance to give a press fit in a H7 housing. Additional side notches provide for positive torque transmission.

If the housing tolerance is to K6, use of the notches is not necessary, but the housing must be strong enough to not expand after assembly.

NF

NF

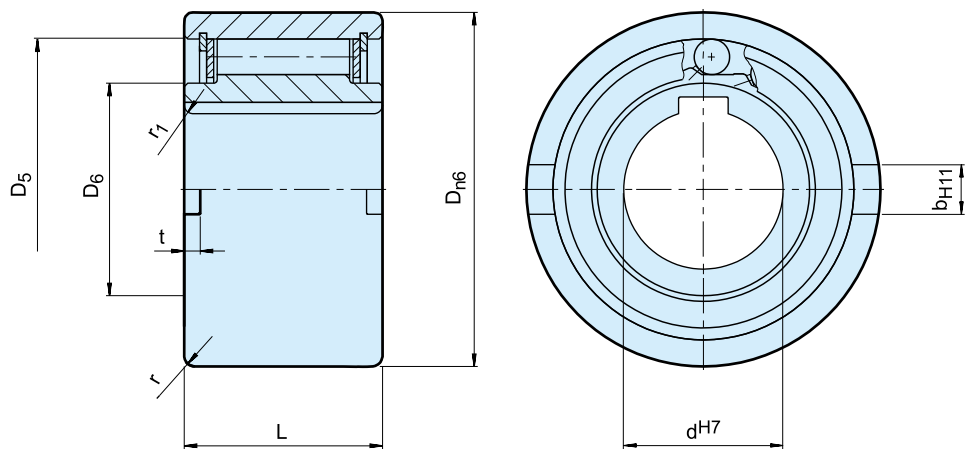

Type	Size		Overrunning speeds										Weight
	d^{H7} [mm]	T_{KN} 1) [Nm]	n_{imax} 2) [min⁻¹]	n_{amax} 3) [min⁻¹]	D_{n6} [mm]	D_5 [mm]	D_6 [mm]	L [mm]	t [mm]	b^{H11} [mm]	r [mm]	r_1 [mm]	[kg]
NF	8	20	5000	6000	37	30	20	20	3	6	1,0	1,5	0,1
	12	20	5000	6000	37	30	20	20	3	6	1,0	1,5	0,1
	15	78	4500	5400	47	37	26	30	3,5	7	1,5	1,5	0,3
	20	188	3000	3600	62	52	37	36	3,5	8	2,0	2,0	0,6
	25	250	2200	2600	80	68	49	40	4	9	2,5	2,0	1,1
	30	500	1800	2100	90	75	52,5	48	5	12	2,5	2,0	1,6
	35	663	1600	1950	100	80	58	53	6	13	2,5	2,5	2,3
	40	1100	1250	1700	110	90	62	63	7	15	3,0	2,5	3,1
	45	1500	1100	1500	120	95	69	63	7	16	3,0	2,5	3,7
	50	2375	850	1300	130	110	82	80	8,5	17	3,5	3,0	5,4
	55	2500	800	1200	140	115	83	80	9	18	3,5	3,0	6,1
	60	4250	700	1100	150	125	93,5	95	9	18	3,5	3,5	8,5
	70	5875	620	900	170	140	106	110	9	20	3,5	3,5	13,0
	80	10000	550	800	190	160	122	125	9	20	4,0	3,5	18,0
	90	17250	480	700	215	180	133	140	11,5	24	4,0	4,0	25,3
	100	19625	400	600	260	210	157	150	14,5	28	4,0	4,0	42,1
	130	34750	300	480	300	240	188	180	17	32	5,0	5,0	65,0
	150	44375	250	400	320	260	205	180	17	32	5,0	5,0	95,0

NOTES

1) $T_{max} = 2 \times T_{KN}$
» Refer to Selection page 7 to 11

2) Inner race overruns

3) Outer race overruns

Keyway to DIN 6885.1
» Refer to mounting and maintenance instructions page 12 to 13

MOUNTING EXAMPLE

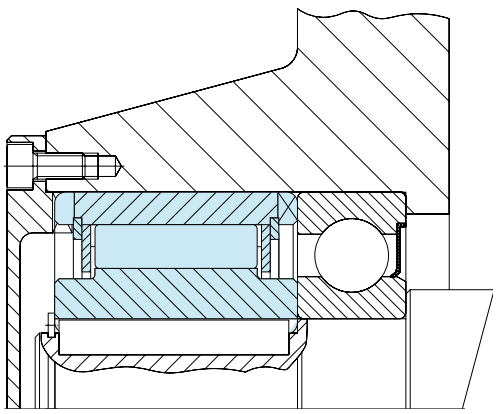

S200

TYPE

Type S200 is a non bearing supported sprag type freewheel. The sprags run directly on the shaft provided by the user. Bearings are required to support axial and radial loads. Lubrication and sealing must also be provided by the installation.

A typical arrangement is to install this type alongside a bearing as shown on the following page. The housing bore to receive the outer race will be machined with a H7 tolerance. A key will transmit the torque. The shaft on which the sprags run must have a surface hardness of HRc 60 to 62 for a finished depth of 0,6 mm minimum. Core hardness should be HRc 35 to 45. Surface roughness must not exceed 22 CLA. Maximum shaft taper 0,01 mm per 50 mm length. Concentricity between shaft and housing bore should be maintained within TIR 0,05 mm.

The preferred lubrication is oil. The Stieber design allows the use of most of the common lubricants used in power transmission including gear oils with EP additives. When necessary grease lubrication is also possible.

S200

S200

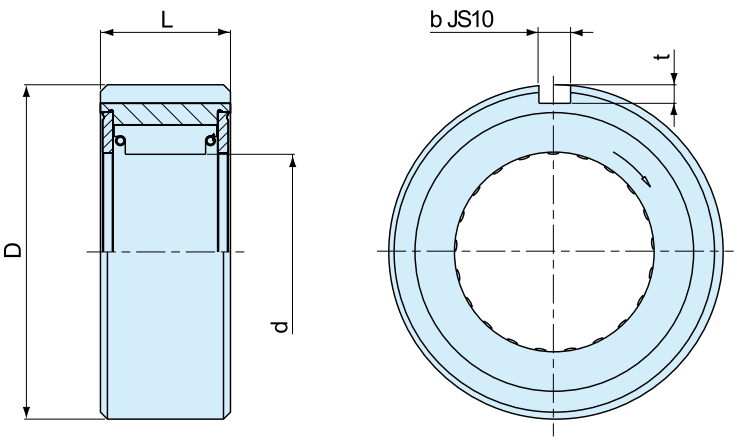

Type	Size			Overrunning speeds							Drag torque	Weight
		$d_{+0\ -0,025}$ [mm]	T_{KN} 1) [Nm]	n_{max} 2) [min⁻¹]	n_{amax} 3) [min⁻¹]	D [mm]	L [mm]	b [mm]	t [mm]	Bearing series	T_r [Ncm]	[kg]
S200	203	16,510	45	2400	500	$40_{-0,014\ -0,039}$	25	4	2,5	6203	0,01	0,25
	204	18,796	60	2400	500	$47_{-0,014\ -0,039}$	25	5	3	6204	0,01	0,35
	205	23,622	100	1800	400	$52_{-0,017\ -0,042}$	25	5	3	6205	0,02	0,45
	206	32,766	240	1800	350	$62_{-0,017\ -0,042}$	28	7	4	6206	0,02	0,70
	207	42,088	380	1800	300	$72_{-0,017\ -0,042}$	28	7	4	6207	0,02	0,80
	208	46,761	560	1800	200	$80_{-0,017\ -0,042}$	32	10	4,5	6208	0,02	0,90
	209	46,761	560	1800	200	$85_{-0,020\ -0,042}$	32	10	4,5	6209	0,02	0,95
	210	56,109	850	1200	200	$90_{-0,020\ -0,042}$	32	10	4,5	6210	0,03	1,00

NOTES

1) $T_{max} = 2 \times T_{KN}$
» Refer to Selection page 7 to 11

2) Inner race overruns

3) Outer race overruns

» Refer to mounting and maintenance instructions page 12 to 13

MOUNTING EXAMPLE

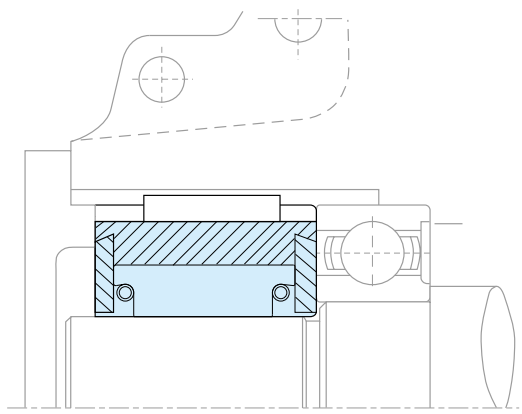

DC

TYPE

Type DC is a sprag type freewheel cage without inner or outer races. It must be installed in a design providing races, bearing support for axial and radial loads, lubrication and sealing. The DC type version-N accepts all types of lubricants currently used in the power transmission equipement.

The sprag space tolerance must not be exceeded. Inner and outer races must both have a minimum plain width “e”, without any recess, to ensure the freewheel functions correctly as shown on following pages.

Alternatively, races can be made in case hardened steel shafts, or housings, to the specification below. Surface hardness of the finished part should be HRC 60 to 62, for a depth of 0,6 mm minimum.

Core hardness to be HRC35 to 45. Surface roughness not to exceed 22CLA. Maximum taper between races: 0,007 mm for 25 mm width.

DC

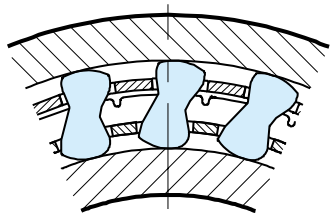

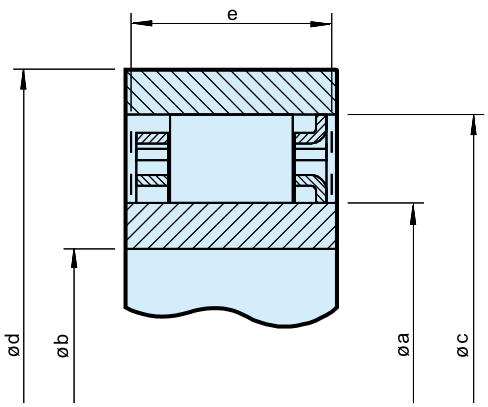

DC

Size		Overrunning speeds				Sprag space				Number of clips	Number of sprags	Weight
	T_{KN} 1) [Nm]	n_{imax} 2) [min⁻¹]	n_{amax} 3) [min⁻¹]	$Øa^{+0,008}_{-0,005}$ [mm]	$Øc^{\pm 0,013}$ [mm]	[mm]	e_{min} [mm]	$Ød_{min}$ [mm]	$Øb_{max}$ [mm]			[kg]
DC2222G-N	63	8600	4300	22,225	38,885	8,33 ±0,075	10,0	50	15	–	12	0,030
DC2776-N	119	6900	3400	27,762	44,422	8,33 ±0,075	13,5	58	18	–	14	0,055
DC3034-N	124	6300	3100	30,340	47,000	8,33 ±0,075	13,5	62	20	–	14	0,060
DC3175(3C)-N	159	6000	3000	31,750	48,410	8,33 ±0,075	13,5	63	21	3	16	0,060
DC3809A-N	275	5000	2500	38,092	54,752	8,33 ±0,075	16,0	71	25	–	18	0,085
DC4127(3C)-N	224	4600	2300	41,275	57,935	8,33 ±0,075	13,5	75	27	3	18	0,090
DC4445A-N	363	4300	2100	44,450	61,110	8,33 ±0,075	16,0	79	29	–	20	0,095
DC4972(4C)-N	306	3800	1900	49,721	66,381	8,33 ±0,075	13,5	86	33	4	22	0,100
DC5476A-N	525	3500	1700	54,765	71,425	8,33 ±0,075	16,0	92	36	–	24	0,110
DC5476A(4C)-N	525	3500	1700	54,765	71,425	8,33 ±0,075	16,0	92	36	4	24	0,130
DC5476B(4C)-N	769	3500	1700	54,765	71,425	8,33 ±0,075	21,0	92	36	4	24	0,180
DC5476C(4C)-N	990	3500	1700	54,765	71,425	8,33 ±0,075	25,4	92	36	4	24	0,200
DC5776A-N	604	3300	1600	57,760	74,420	8,33 ±0,075	16,0	98	38	–	26	0,110
DC6334B-N	806	3000	1500	63,340	80,000	8,33 ±0,075	21,0	104	42	–	26	0,175
DC7221(5C)-N	675	2600	1300	72,217	88,877	8,33 ±0,075	13,5	115	48	5	30	0,140
DC7221B-N	1279	2600	1300	72,217	88,877	8,33 ±0,075	21,0	115	48	–	30	0,185
DC7221B(5C)-N	1279	2600	1300	72,217	88,877	8,33 ±0,075	21,0	115	48	5	30	0,210
DC7969C(5C)-N	2038	2400	1200	79,698	96,358	8,33 ±0,075	25,4	124	53	5	34	0,280
DC8334C-N	2055	2300	1100	83,340	100,000	8,33 ±0,075	25,4	132	55	–	34	0,270
DC8729A-N	1250	2200	1100	87,290	103,960	8,33 ±0,075	16,0	134	58	–	34	0,165
DC10323A(5C)*-N	1612	1800	900	103,231**	119,891	8,33 ±0,075	16,0	155	68	5	40	0,205
DC12334C*-N	4800	1500	750	123,340**	140,000	8,33 ±0,075	25,4	184	80	–	50	0,400
DC12388C(11C)	4875	1500	750	123,881	142,880	9,50 ±0,1	25,4	186	80	11	44	0,400

NOTES

1) $T_{max} = 2 \times T_{KN}$
» Refer to Selection page 7 to 11

2) Inner race overruns

3) Outer race overruns

*) The inner cage centering flange is on the opposite side

**) Extension of tolerance to ± 0,013 permissible

Other dimensions on request

» Refer to mounting and maintenance instructions page 12 to 13

MOUNTING EXAMPLES

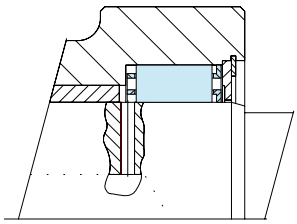

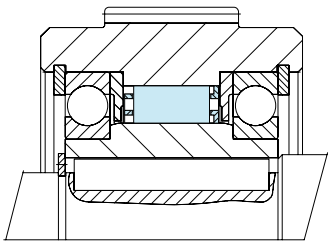

DC-RACES

TYPE

DC races are offered for use with the DC freewheel cages shown on the previous pages. The cage and race assembly, makes a non-bearing supported freewheel.

Bearing support for axial and radial loads must be provided, along with lubrication and sealing. The sprag space tolerance must not be exceeded when all bearing clearances and mounting tolerances are considered, (» see table page 35).

Taper between races should be below 0,007 mm for 25 mm width. Outer races type A and B should be pressed into housings that will not deform after assembly. Please contact our technical department if you need to transmit maximum freewheel torque capacity with A and G type. Key stresses may have to be checked.

DC-RACES

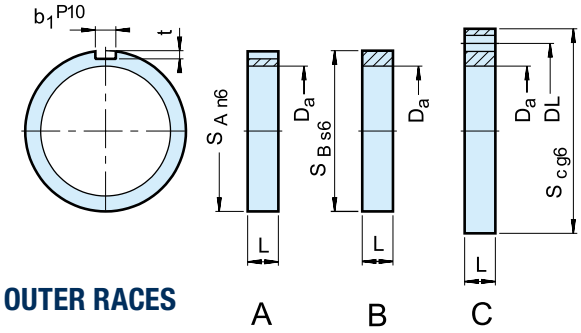

OUTER RACES

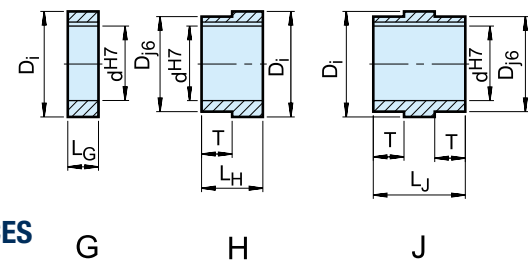

INNER RACES

1) Keyway to DIN 6885.1

Size																	
															Number of holes × ø		Number of holes × ø
	d^{H7} [mm]	L_G [mm]	L_H [mm]	L_J [mm]	D_{j6} [mm]	T [mm]	D_i $^{+0,008}_{-0,005}$ [mm]	L [mm]	S_{An6} [mm]	b_i^{P10}	t	S_{Bs6}	S_{Cg6} [mm]	$DL^{\pm 0,1}$ [mm]		D_a ± 0,013 [mm]	
DC 230A								16	72	6	3,5					54,752	DC 3809A
DC 230B								16				72				54,752	
DC 230C								16					95	78	8 × 7	54,752	
DC 230 G-10	10	16					38,092										
DC 230 G-15	15	16					38,092										
DC 230 G-20	20	16					38,092										
DC 230 H-10	10		33		35	17	38,092										
DC 230 H-15	15		33		35	17	38,092										
DC 230 H-20	20		33		35	17	38,092										
DC 230 J-10	10			50	35	17	38,092										
DC 230 J-15	15			50	35	17	38,092										
DC 230 J-20	20			50	35	17	38,092										
DC 167A								16	90	10	5					71,425	DC 5476A DC 5476A (4c)
DC 167B								16				90				71,425	
DC 167C								16					110	95	8 × 9	71,425	
DC 167G-25	25	16					54,765										
DC 167G-30	30	16					54,765										
DC 167G-35	35	16					54,765										
DC 167H-25	25		35		50	19	54,765										
DC 167H-30	30		35		50	19	54,765										
DC 167H-35	35		35		50	19	54,765										
DC 167J-25	25			54	50	19	54,765										
DC 167J-30	30			54	50	19	54,765										
DC 167J-35	35			54	50	19	54,765										
DC 168A								21	110	14	5,5					88,877	DC 7221 (5c)' DC 7221B DC 7221B (5c)
DC 168B								21				110				88,877	
DC 168C								21					140	120	8 × 11	88,877	
DC 168G-40	40	21					72,217										
DC 168G-45	45	21					72,217										
DC 168G-50	50	21					72,217										
DC 168H-40	40		42		65	21	72,217										
DC 168H-45	45		42		65	21	72,217										
DC 168H-50	50		42		65	21	72,217										
DC 168J-40	40			63	65	21	72,217										
DC 168J-45	45			63	65	21	72,217										
DC 168J-50	50			63	65	21	72,217										
DC 235A								16	150	20	7,5					119,891	DC 10323A (5c)
DC 235B								16				150				119,891	
DC 235C								16					190	170	8 × 11	119,891	
DC 235G-55	55	16					103,231										
DC 235G-60	60	16					103,231										
DC 235G-75	75	16					103,231										
DC 235H-55	55		43		100	27	103,231										
DC 235H-60	60		43		100	27	103,231										
DC 235H-75	75		43		100	27	103,231										
DC 235J-55	55			70	100	27	103,231										
DC 235J-60	60			70	100	27	103,231										

NFR

TYPE

Type NFR is a bearing supported roller type freewheel without any sealing. Lubrication and sealing must be provided by the installation. Standard lubrication is oil.

Size 8 to 20 units use steel on steel bearing support from the inner race. Above size 25, two 160.. series ball bearings are used, giving a higher overrunning speed capacity. A typical arrangement is shown overleaf.

The inner race is keyed to the shaft. The outer race has a positive n6 tolerance to give a press fit in a housing to H7.Additional side notches provide for positive torque transmission.The housing must be strong enough to not expand after assembly.

NFR

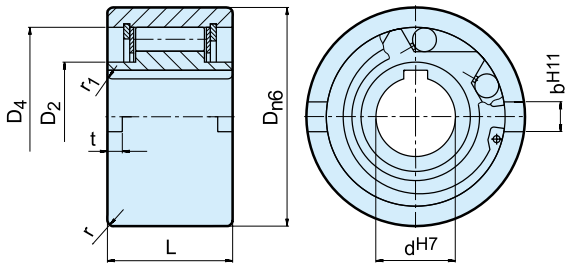

NFR 8-20*

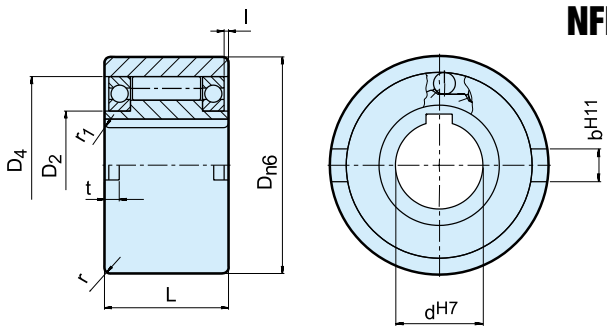

NFR 25-130**

Type	Size		Overrunning speeds		Bearing										Weight
	d^{H7} [mm]	T_{KN} 1) [Nm]	n_{imax} 2) [min⁻¹]	n_{amax} 3) [min⁻¹]		D_{n6} [mm]	D_2 [mm]	D_4 [mm]	L [mm]	l [mm]	t [mm]	b^{H11} [mm]	r [mm]	r_1 [mm]	[kg]
NFR (ANR-ANG)	8	20	1000	1000	*	37	20	30	20		3	6	1	1,5	0,1
	12	20	1000	1000	*	37	20	30	20		3	6	1	1,5	0,1
	15	78	850	850	*	47	26	37	30		3,5	7	1,5	1,5	0,3
	20	188	650	650	*	62	37	52	36		3,5	8	2	2	0,6
	25	250	2100	3600	16008**	80	40	68	40	0,2	4	9	2,5	2	1,2
	30	500	1700	3200	16009**	90	45	75	48	0,2	5	12	2,5	2	1,8
	35	663	1550	3000	16010**	100	50	80	53	1,2	6	13	2,5	2,5	2,4
	40	1100	1150	2600	16011**	110	55	90	63	2,2	7	15	3	2,5	3,3
	45	1500	1000	2400	16012**	120	60	95	63	2,2	7	16	3	2,5	4,0
	50	2375	800	2150	16014**	130	70	110	80	2,7	8,5	17	3,5	3	5,7
	55	2550	750	2000	16015**	140	75	115	80	4,2	9	18	3,5	3	6,5
	60	4250	650	1900	16016**	150	80	125	95	3,2	9	18	3,5	3,5	8,9
	70	5875	550	1750	16018**	170	90	140	110	1,1	9	20	3,5	3,5	13,5
	80	10000	500	1600	16021**	190	105	160	125	0	9	20	4	3,5	19,0
	90	17250	450	1450	16024**	215	120	180	140	0,6	11,5	24	4	4	27,2
	100	19625	350	1250	16028**	260	140	210	150	2,6	14,5	28	4	4	44,5
	130	34750	250	1000	16032**	300	160	240	180	2	17,5	32	5	5	68,0

NOTES

1) $T_{max} = 2 \times T_{KN}$
» Refer to Selection page 7 to 11

2) Inner race overruns

3) Outer race overruns

Keyway to DIN 6885.1

*) With plain bearing steel on steel

**) With 2 ball bearings series 160.

» Refer to mounting and maintenance instructions page 12 to 13

MOUNTING EXAMPLE

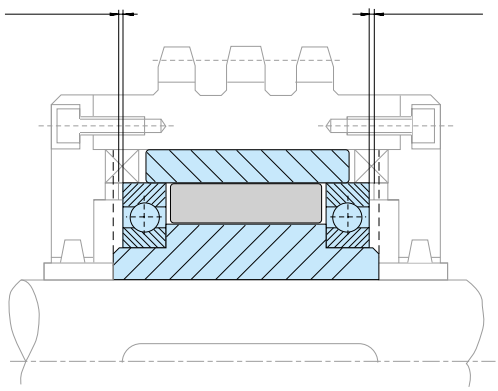

RSBW

TYPE

Type RSBW is a DC sprag type freewheel. It is self-contained, centered by plain bearings for low rotational speeds and sealed using shield protected O-Rings.

Unit is delivered grease lubricated ready for installation in either a horizontal or vertical position. Primarily used as a backstop, this type provides a high torque capacity with a minimum space requirement. The design allows installation in difficult environments such as high humidity or water splash areas. A bolt, secured to a fixed part of the machine and passing through the slot in the torque arm, provides the rotational stop. Radial clearance on this bolt should be equal to 1–3 % of the slot width. The torque arm and the bearings must not be prestressed.

RSBW

RSBW

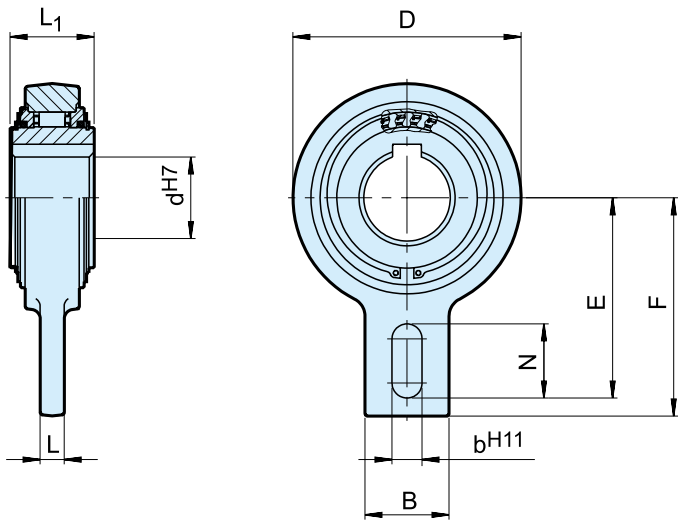

Type	Size		Overrunning speed									Weight
	d^{H7} [mm]	T_{KN} 1) [Nm]	n_{imax} [min⁻¹]	D [mm]	L_1 [mm]	F [mm]	E [mm]	B [mm]	N [mm]	L [mm]	b^{H11} [mm]	[kg]
RSBW	20	375	400	106	35	113	102,5	40	35	15	18	2
	25	606	400	106	48	113	102,5	40	35	15	18	2,6
	30	606	400	106	48	113	102,5	40	35	15	18	2,5
	35M	375	400	106	35	113	102,5	40	35	15	18	2
	35	606	400	106	48	113	102,5	40	35	15	18	2,4
	40	1295	300	132	52	125	115	60	35	15	18	4,6
	45	1295	300	132	52	125	115	60	35	15	18	4,5
	50	1295	300	132	52	125	115	60	35	15	18	4,5
	55	1295	300	132	52	125	115	60	35	15	18	4,4
	60	2550	250	161	54	140	130	70	35	15	18	6,5
	70	2550	250	161	54	140	130	70	35	15	18	6,4
	80	4875	200	190	70	165	150	70	45	20	25	9,9
	90	4875	200	190	70	165	150	70	45	20	25	9,8

NOTES

1) $T_{max} = 2 \times T_{KN}$
» Refer to Selection page 7 to 11

Keyway to DIN 6885.1

» Refer to mounting and maintenance instructions page 12 to 13

MOUNTING EXAMPLE

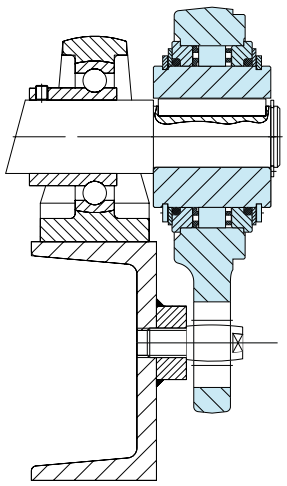

AV

TYPE

Type AV is a roller type freewheel. It is self-contained, centered by plain bearings for low rotational speeds, and sealed using shield protected metallic labyrinth seals

Unit is delivered grease lubricated, ready to install in a horizontal or vertical position. Primarily used as a backstop, the torque capacity is high for a minimum space requirement. This design is suitable for use in difficult environments. A bolt, secured to a fixed part of the machine and passing through the slot in the torque arm, provides the rotational stop. Radial clearance on this bolt should be equal to 1–3 % of the slot width.

The torque arm and the bearings must not be prestressed. The roller design makes the AV type ideal for light indexing applications.

AV

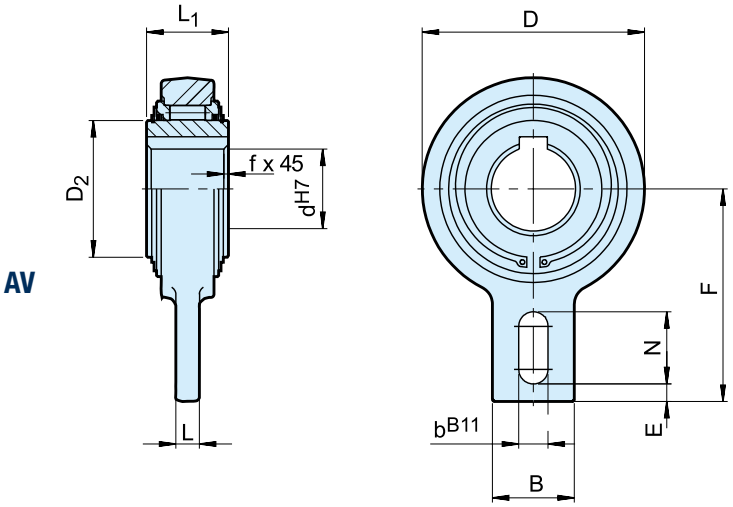

Type	Size		Overrunning speed											Weight	Drag torque
	d^{H7} [mm]	T_{KN} 1) [Nm]	n_{imax} [min⁻¹]	D [mm]	D_2 [mm]	L_1 [mm]	L [mm]	B [mm]	F [mm]	b^{B11} [mm]	N [mm]	E [mm]	f [mm]	[kg]	T_R [Ncm]
AV	20	265	450	83	42	35	12	40	90	15	35	5	0,8	1,3	18
	25	265	450	83	42	35	12	40	90	15	35	5	0,8	1,3	18
	30	1200	320	118	60	54	15	40	110	15	35	8	1	3,5	130
	35	1200	320	118	60	54	15	40	110	15	35	8	1	3,4	130
	40	1200	320	118	60	54	15	40	110	15	35	8	1	3,3	130
	45	2150	280	155	90	54	20	80	140	18	47	10	1	5,5	240
	50	2150	280	155	90	54	20	80	140	18	47	10	1	5,4	240
	55	2150	280	155	90	54	20	80	140	18	47	10	1	5,3	240
	60	2150	280	155	90	54	20	80	140	18	47	10	1	5,2	240
	70	2150	280	155	90	54	20	80	140	18	47	10	1	5,0	240
	80	2900	200	190	110	64	20	80	155	20	40	10	1,5	8,7	360
	90*	7125	150	260	160	90	25	120	220	–	–	–	3	24,5	360
	100*	7125	150	260	160	90	25	120	220	–	–	–	3	23,5	360
	110*	7125	150	260	160	90	25	120	220	–	–	–	3	22,5	360
	120*	11000	130	300	180	110	30	140	260	–	–	–	3	42	600

NOTES

1) $T_{max} = 2 \times T_{KN}$
» Refer to Selection page 7 to 11
Keyway to DIN 6885.1

*) 2 Keyways 120° offset

» Refer to mounting and maintenance instructions page 12 to 13

MOUNTING EXAMPLE

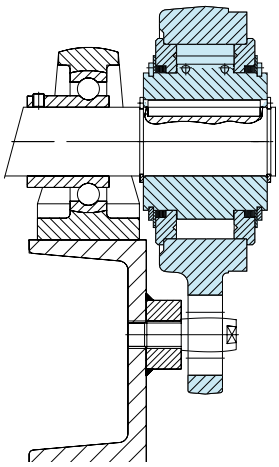

GFR
GFRN

TYPE

Types GFR, GFRN are roller type freewheels. These units are part of the Stieber modular system. They are bearing supported, using two 160.. series bearings, and require oil lubrication. These units may be used in designs providing oil lubrication and sealing as on the example overleaf. The bearings must not be axially stressed.

Typically, types GFR, GFRN are used with the F series covers that are designed to transmit torque, and provide oil lubrication and sealing. Usually these covers are used in pairs according to combinations shown on the following pages. The outer race of the GFR model is plain to receive and center any component bored to H7 tolerance.

Torque is transmitted by bolts through the cover plate in this case. Types GFR, GFRN are identical except that type GFRN has a keyway on the outside diameter to transmit the torque. Two paper seals are delivered with each unit to be placed between the outer race and cover plates.

GFR, GFRN

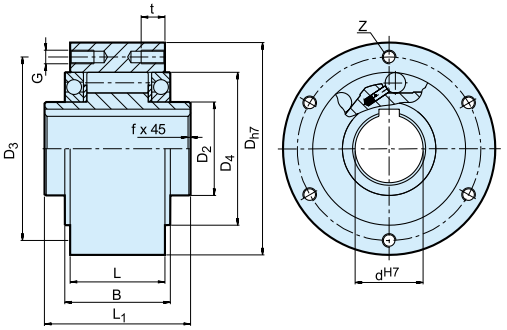

GFR

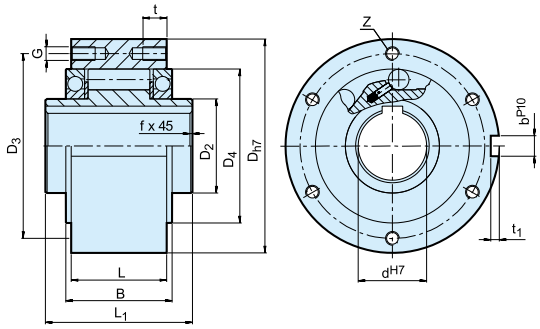

GFRN

Type	Size		Overrunning speeds								Number							Weight
	d^{H7} [mm]	T_{KN} 1) [Nm]	n_{imax} 2) [min⁻¹]	n_{amax} 3) [min⁻¹]	D_{h7} [mm]	D_2 [mm]	D_4 [mm]	D_3 [mm]	G	t [mm]	z	L_1 [mm]	L [mm]	B [mm]	t_1 [mm]	b^{P10} [mm]	f [mm]	[kg]
GFR GFRN	12*	55	4000	7200	62	20	42	51	ø5,5	–	3	42	20	27	2,5	4	0,5	0,5
	15	125	3600	6500	68	25	47	56	M5	8	3	52	28	32	3	5	0,8	0,8
	20	181	2700	5600	75	30	55	64	M5	8	4	57	34	39	3,5	6	0,8	1,0
	25	288	2100	4500	90	40	68	78	M6	10	4	60	35	40	4	8	1,0	1,5
	30	500	1700	4100	100	45	75	87	M6	10	6	68	43	48	4	8	1,0	2,2
	35	725	1550	3800	110	50	80	96	M6	12	6	74	45	51	5	10	1,0	3,0
	40	1025	1150	3400	125	55	90	108	M8	14	6	86	53	59	5	12	1,5	4,6
	45	1125	1000	3200	130	60	95	112	M8	14	8	86	53	59	5,5	14	1,5	4,7
	50	2125	800	2800	150	70	110	132	M8	14	8	94	64	72	5,5	14	1,5	7,2
	55	2625	750	2650	160	75	115	138	M10	16	8	104	66	72	6	16	2,0	8,6
	60	3500	650	2450	170	80	125	150	M10	16	10	114	78	89	7	18	2,0	10,5
	70	5750	550	2150	190	90	140	165	M10	16	10	134	95	108	7,5	20	2,5	13,5
	80	8500	500	1900	210	105	160	185	M10	16	10	144	100	108	9	22	2,5	18,2
	90	14500	450	1700	230	120	180	206	M12	20	10	158	115	125	9	25	3,0	28,5
	100	20000	350	1450	270	140	210	240	M16	24	10	182	120	131	10	28	3,0	42,5
	130	31250	250	1250	310	160	240	278	M16	24	12	212	152	168	11	32	3,0	65,0
	150	70000	200	980	400	200	310	360	M20	32	12	246	180	194	12	36	4,0	138,0

NOTES

1) $T_{max} = 2 \times T_{KN}$
» Refer to Selection page 7 to 11

2) Inner race overruns. Values without radial lip seals

3) Outer race overruns. Values without radial lip seals
Keyway to DIN 6885.1

*) GFR12 has through holes in outer race

» Refer to mounting and maintenance instructions page 12 to 13

MOUNTING EXAMPLE

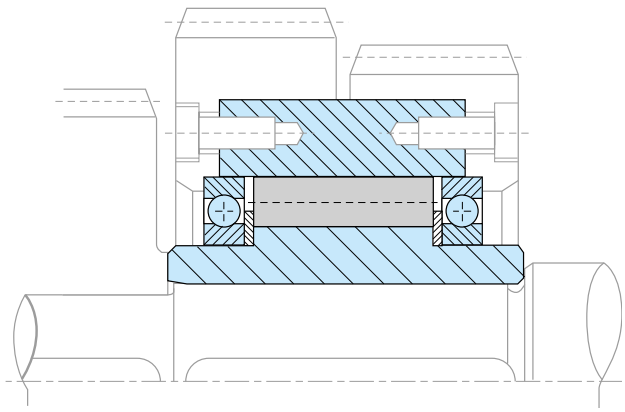

GFR..F1F2, GFR..F2F7 GFRN..F5F6

Back of GFR..F1F2

TYPE

Types GFR..F1F2/F2F7 and GFRN..F5F6 are roller type freewheels, self-contained, sealed and bearing supported, using two 160.. series bearings.

They use the GFR, GFRN base modules described on previous pages. Units must be oil lubricated before use if they are delivered disassembled. Primarily used as overrunning or indexing clutches. The cover combination is chosen according to the type of drive, as shown overleaf. F2 and F6 covers are used to close the unit. They are equipped with 3 screws for oil filling, drain and level.

The shaft seal is a standard lip seal. Covers may be easily assembled by a qualified user, allowing direction of rotation to be selected on site. Alternatively, units can be delivered assembled and lubricated (except GFRN.. F5F6).

GFR..F1F2, GFR..F2F7, GFRN..F5F6

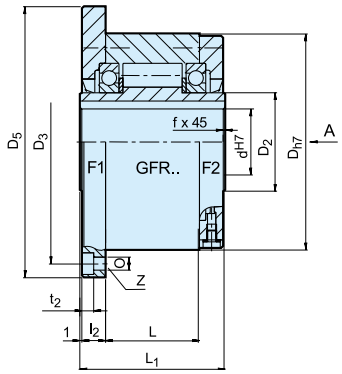

GFR...F1F2

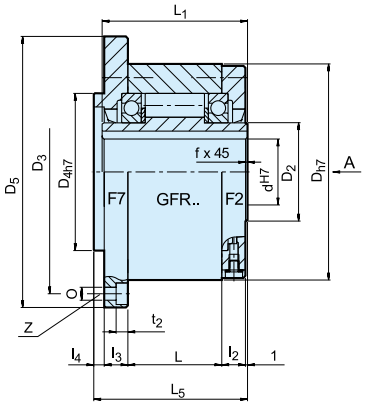

GFR...F2F7

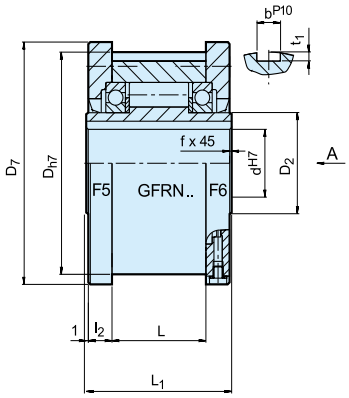

GFRN...F5F6

Type	Size		Overrunning speeds									Number							Keyway outer race		Weight
	d^{H7} [mm]	T_{KN} 1) [Nm]	n_{imax} 2) [min⁻¹]	n_{amax} 3) [min⁻¹]	D_{h7} [mm]	D_5 [mm]	D_7 [mm]	D_3 [mm]	$D_{4\,h7}$ [mm]	O [mm]	t_2 [mm]	z	L_1 [mm]	L_5 [mm]	L [mm]	l_2 [mm]	l_3 [mm]	l_4 [mm]	t_1 [mm]	b^{P10} [mm]	f [mm]	[kg]
GFR..F1F2, GFR..F2F7, GFRN.. F5F6	12	55	3100	4700	62	85	70	72	42	5,5	5,7	3	42	44	20	10	10	3	2,5	4	0,5	1,2
	15	125	2800	4400	68	92	76	78	47	5,5	5,7	3	52	54	28	11	11	3	3	5	0,8	1,6
	20	181	2400	4100	75	98	84	85	55	5,5	5,7	4	57	59	34	10,5	10,5	3	3,5	6	0,8	1,9
	25	288	1600	3800	90	118	99	104	68	6,6	6,8	4	60	62	35	11,5	11,5	3	4	8	1,0	2,9
	30	500	1300	2800	100	128	109	114	75	6,6	6,8	6	68	70	43	11,5	11,5	3	4	8	1,0	3,9
	35	725	1200	2600	110	140	119	124	80	6,6	6,8	6	74	76	45	13,5	13	3,5	5	10	1,0	4,9
	40	1025	850	2300	125	160	135	142	90	9	9	6	86	88	53	15,5	15	3,5	5	12	1,5	7,5
	45	1125	740	2200	130	165	140	146	95	9	9	8	86	88	53	15,5	15	3,5	5,5	14	1,5	7,8
	50	2125	580	1950	150	185	160	166	110	9	9	8	94	96	64	14	13	4	5,5	14	1,5	10,8
	55	2625	550	1800	160	204	170	182	115	11	11	8	104	106	66	18	17	4	6	16	2,0	14,0
	60	3500	530	1700	170	214	182	192	125	11	11	10	114	116	78	17	16	4	7	18	2,0	16,8
	70	5750	500	1600	190	234	202	212	140	11	11	10	134	136	95	18,5	17,5	4	7,5	20	2,5	20,8
	80	8500	480	1500	210	254	222	232	160	11	11	10	144	146	100	21	20	4	9	22	2,5	27,0
	90	14500	420	1300	230	278	242	254	180	14	13	10	158	160	115	20,5	19	4,5	9	25	3,0	40,0
	100	20000	310	1100	270	335	282	305	210	18	17,5	10	182	184	120	30	28	5	10	28	3,0	67,0
	130	31250	220	900	310	380	322	345	240	18	17,5	12	212	214	152	29	27	5	11	32	3,0	94,0
	150	70000	170	700	400	485	412	445	310	22	21,5	12	246	248	180	32	30	5	12	36	4,0	187,0

NOTES

1) $T_{max} = 2 \times T_{KN}$
» Refer to Selection page 7 to 11

2) Inner race overruns

3) Outer race overruns
Keyway to DIN 6885.1

When ordered assembled, please specify direction of rotation seen from arrow „A“: „R“ Inner race overruns in clockwise direction „L“ Inner race overruns in counter-clockwise direction

» Refer to mounting and maintenance instructions page 12 to 13

MOUNTING EXAMPLES

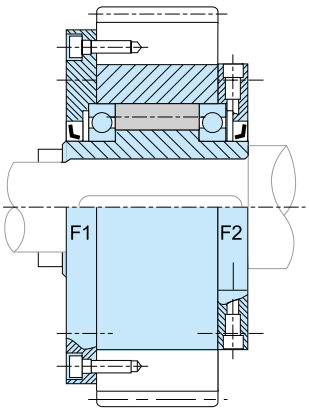

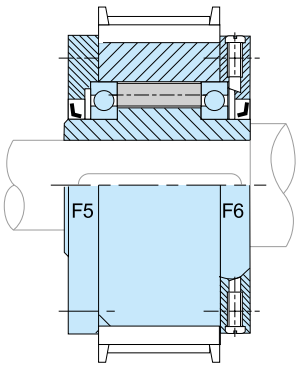

GFR..F2F3
GFR..F3F4

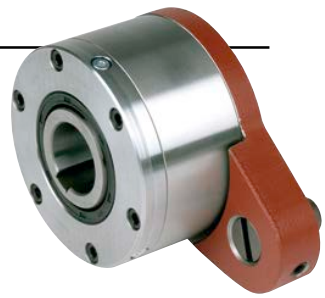

TYPE

Types GFR..F2F3/F3F4 are roller type freewheels, self-contained, sealed and bearing supported, using two 160.. series bearings.

They use the GFR base module. Units must be oil lubricated before use if they are delivered disassembled and in any case for the F3F4 combination. These cover combinations are primarily used as backstops, as shown overleaf. The F3 cover acts as a torque arm and has an integrated stop bolt. The stop bolt should go into a slot in a fixed part of the machine. The stop bolt must have a radial clearance of 1–3 % of the bolt‘s diameter. The torque arm and bearings must not be prestressed in any way. F2 and F4 covers are used to close the unit. They are equipped with 3 screws for oil filling, drain and level.

If using cover type F4, shaft end plate and its screw must be sealed to avoid oil leakage through the keyway. Covers are easily fitted, allowing on site selection of rotation direction. If requested units can be delivered assembled and lubricated for the F2F3 combination.

GFR..F2F3, GFR..F3F4

GFR...F2F3

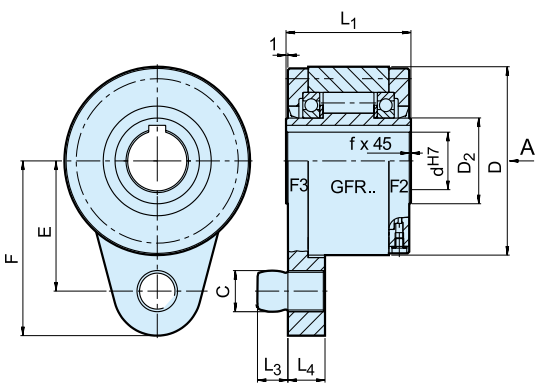

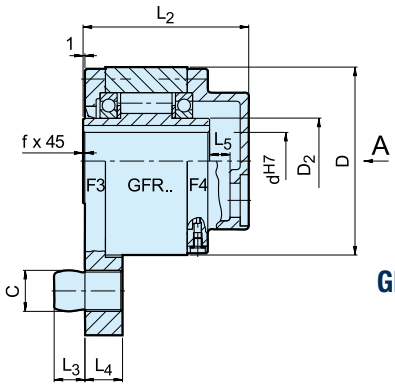

GFR...F3F4

Type	Size		Overrunning speed												Weight
	d^{H7} [mm]	T_{KN} 1) [Nm]	n_{imax} 2) [min⁻¹]	D [mm]	D_2 [mm]	C [mm]	L_1 [mm]	L_2 [mm]	L_3 [mm]	L_4 [mm]	F [mm]	E [mm]	L_5 [mm]	f [mm]	[kg]
GFR..F2-F3 GFR..F3-F4	12	55	3100	62	20	10	42	64	10	13	59	44	6	0,5	1,4
	15	125	2800	68	25	10	52	78	10	13	62	47	10	0,8	1,8
	20	181	2400	75	30	12	57	82	11	15	72	54	10	0,8	2,3
	25	288	1600	90	40	16	60	85	14	18	84	62	10	1,0	3,4
	30	500	1300	100	45	16	68	95	14	18	92	68	10	1,0	4,5
	35	725	1200	110	50	20	74	102	18	25	102	76	12	1,0	5,6
	40	1025	850	125	55	20	86	115	18	25	112	85	12	1,5	8,5
	45	1125	740	130	60	25	86	115	22	25	120	90	12	1,5	8,9
	50	2125	580	150	70	25	94	123	22	25	135	102	12	1,5	12,8
	55	2625	550	160	75	32	104	138	25	30	142	108	15	2,0	16,2
	60	3500	530	170	80	32	114	147	25	30	145	112	15	2,0	19,3
	70	5750	500	190	90	38	134	168	30	35	175	135	16	2,5	23,5
	80	8500	480	210	105	38	144	178	30	35	185	145	16	2,5	32
	90	14500	420	230	120	50	158	192	40	45	205	155	16	3,0	47,2
	100	20000	310	270	140	50	182	217	40	45	230	180	16	3,0	76
	130	31250	220	310	160	68	212	250	55	60	268	205	18	3,0	110
	150	70000	170	400	200	68	246	286	55	60	325	255	20	4,0	214

NOTES

1) $T_{max} = 2 \times T_{KN}$
» Refer to Selection page 7 to 11

2) Inner race overruns
Keyway to DIN 6885.1

When ordered assembled, please specify direction of rotation seen from arrow „A“: „R“ Inner race overruns in clockwise direction, „L“ Inner race overruns in counterclockwise direction

» Refer to mounting and maintenance instructions page 12 to 13

MOUNTING EXAMPLE

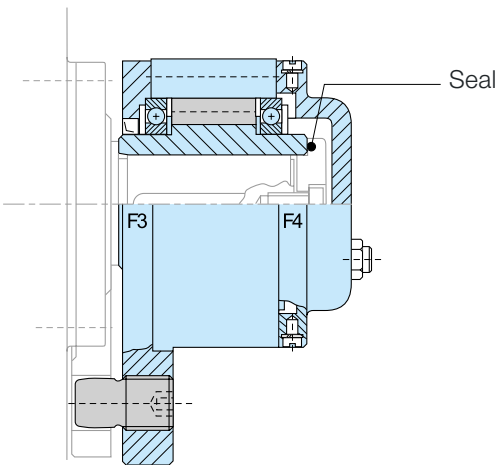

AL
ALP

TYPE

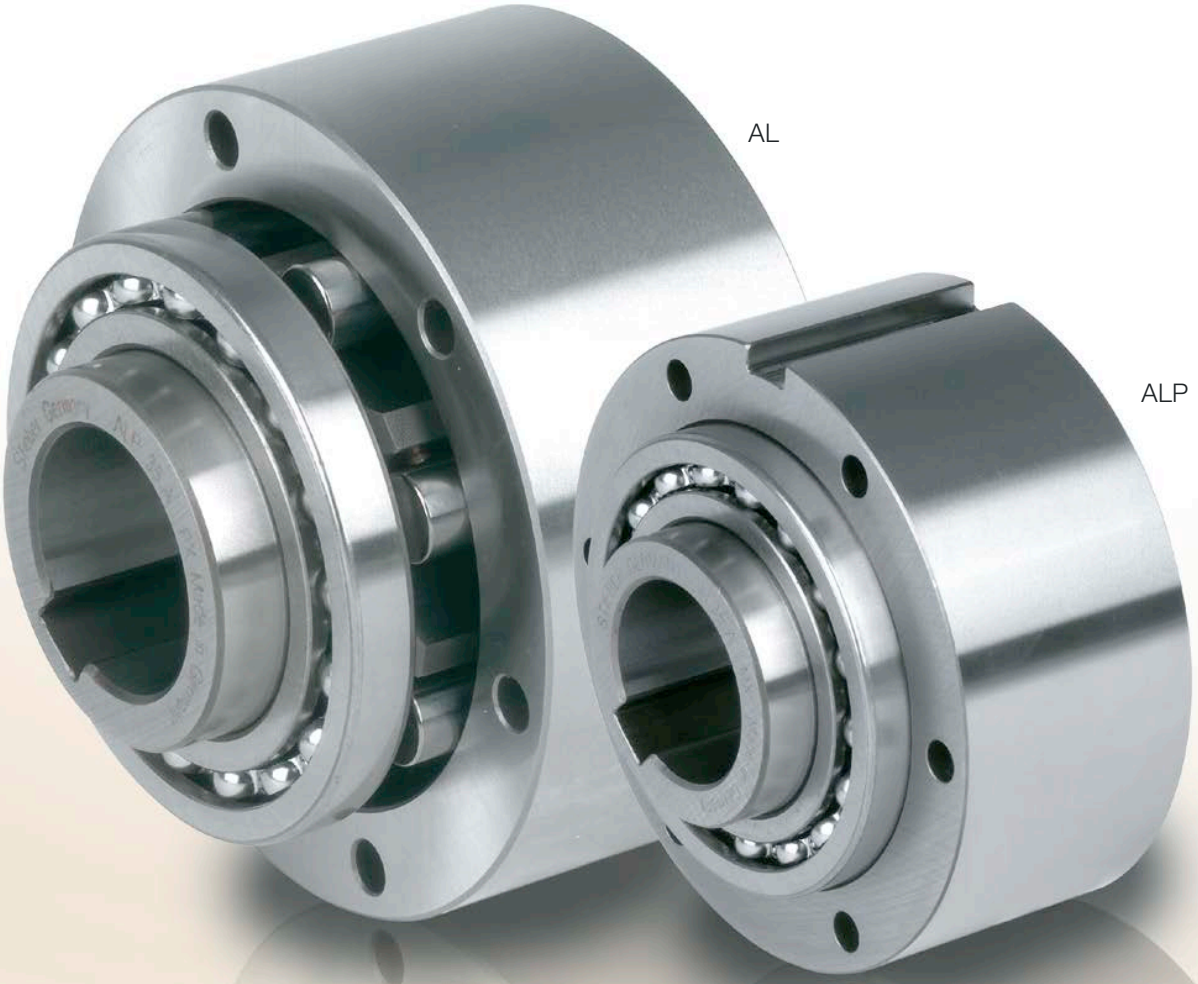

Types AL, ALP are roller type freewheels. These units are part of the Stieber modular system. They are bearing supported, using two 160.. series bearings, and require oil lubrication. These units may be used in designs providing oil lubrication and sealing as on the example overleaf.

The bearings must not be axially stressed. Typically, types AL, ALP are used with standard covers that are designed to transmit torque, and provide oil lubrication and sealing. Usually these covers are used in pairs according to combinations shown on the following pages. The outer race of the AL model is plain to receive and center any component bored to H7 tolerance. Torque is transmitted by bolts through the cover plate in this case. Types AL, ALP are identical except that type ALP has a keyway on the outside diameter to transmit the torque. Two paper seals are delivered with each unit to be placed between the outer race and cover plates.

AL, ALP

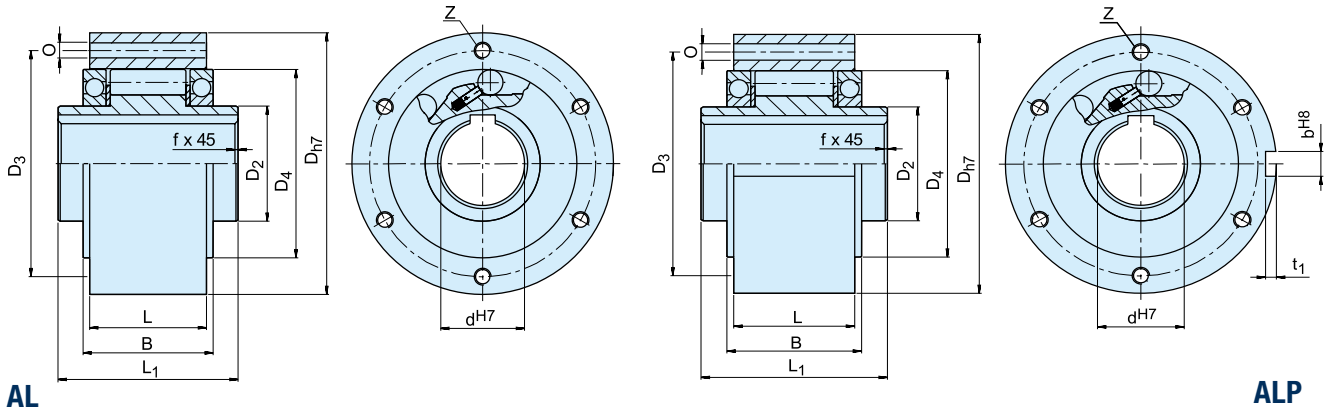

Type	Size		Overrunning speeds							Number							Weight	Drag torque
	d^{H7} [mm]	T_{KN} 1) [Nm]	n_{imax} 2) [min⁻¹]	n_{amax} 3) [min⁻¹]	D_{h7} [mm]	D_2 [mm]	D_4 [mm]	D_3 [mm]	O	z	L_1 [mm]	L 4) [mm]	B [mm]	t_1 [mm]	b^{H8} [mm]	f [mm]	[kg]	T_R [Ncm]
AL ALP	12	55	4000	7200	62	20	42	51	5,5	3	42	20,3	27	2,4	4	0,5	0,5	3,4
	15	125	3600	6500	68	25	47	56	5,5	3	52	30,3	34,1	2,9	5	0,8	0,8	4,1
	20	181	2700	5600	75	30	55	64	5,5	4	57	34,3	39,1	3,5	6	0,8	1,0	8
	25	288	2100	4500	90	40	68	78	5,5	6	60	37,3	42,1	4,1	8	1,0	1,5	14
	30	500	1700	4100	100	45	75	87	6,6	6	68	44,3	49,1	4,1	8	1,0	2,2	23
	35	725	1550	3800	110	50	80	96	6,6	6	74	48,3	54,1	4,7	10	1,0	3,0	60
	40	1025	1150	3400	125	55	90	108	9	6	86	56,3	62,1	4,9	12	1,5	4,6	72
	45	1125	1000	3200	130	60	95	112	9	8	86	56,3	62,1	5,5	14	1,5	4,7	140
	50	2125	800	2800	150	70	110	132	9	8	92	63,3	69,1	5,5	14	1,5	7,2	180
	55	2625	750	2650	160	75	115	138	11	8	104	67	73,1	6,2	16	2,0	8,6	190
	60	3500	650	2450	170	80	125	150	11	10	114	78	84	6,8	18	2,0	10,5	240
	70	5750	550	2150	190	90	140	165	11	10	134	95	103	7,4	20	2,5	13,5	320
	80	8500	500	1900	210	105	160	185	11	10	144	100	108	8,5	22	2,5	18,2	330
	90	14500	450	1700	230	120	180	206	14	10	158	115	125	8,7	25	3,0	28,5	650
	100	20000	350	1450	270	140	210	240	18	10	182	120	131	9,9	28	3,0	42,5	830
	120	31250	250	1250	310	160	240	278	18	12	202	140	152	11,1	32	3,0	65,0	1080
	150	70000	200	980	400	200	310	360	22	12	246	180	196	12,3	36	4,0	138,0	1240
	200	175000	150	750	520	260	400	460	26	18	326	240	265	15	45	5,0	315,0	3800
	250	287500	120	620	610	320	480	545	33	20	396	300	330	15	45	5,0	512,0	6100
ALM	25	388	2100	2800	90	40	68	78	5,5	6	60	37,3	42,1	4,1	8	1,0	1,7	22
	30	588	1700	2500	100	45	75	87	6,6	6	68	44,3	49,1	4,1	8	1,0	2,5	37
	35	838	1550	2400	110	50	80	96	6,6	6	74	48,3	54,1	4,7	10	1,0	3,2	66

NOTES

1) $T_{max} = 2 \times T_{KN}$
» Refer to Selection page 7 to 11

2) Inner race overruns, values without lip seals

3) Outer race overruns
Keyway to DIN 6885.1

4) The dimension L includes up to size 50 the each 0.25 mm thick paper seals to be located on both faces

» Refer to mounting and maintenance instructions page 12 to 13

MOUNTING EXAMPLE

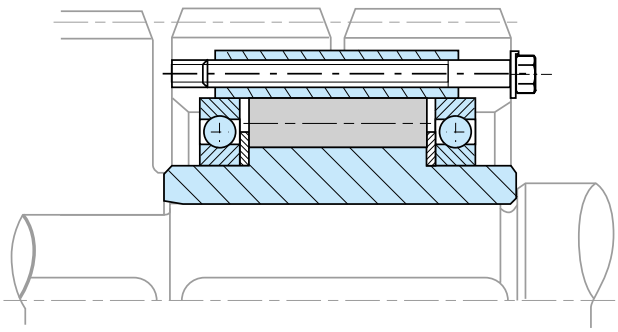

AL..F2D2
AL..F4D2

Back of AL..F2D2 Back of AL..F4D2

TYPE

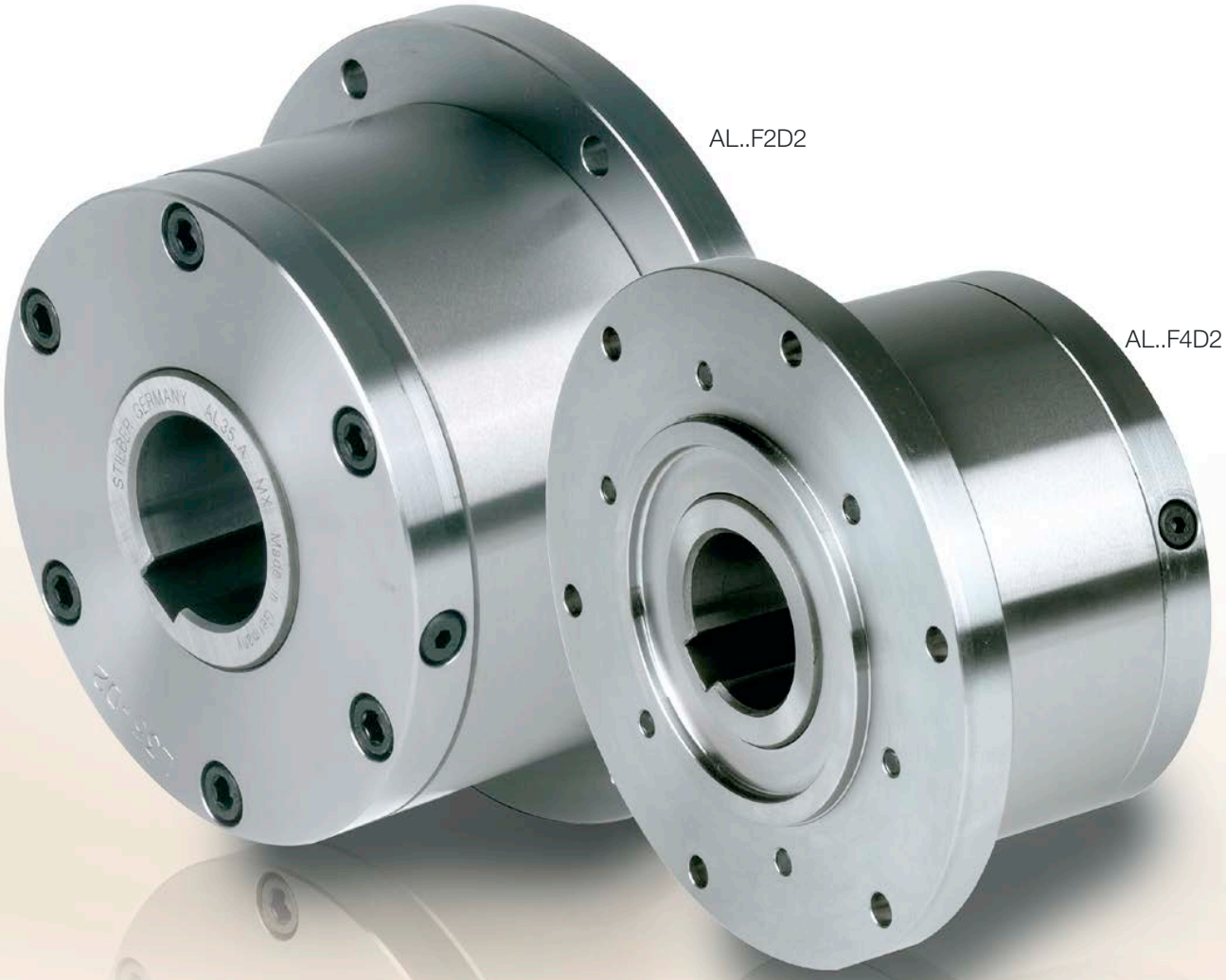

Types AL..F2D2/F4D2 are roller type freewheels, self-contained, sealed and bearing supported, using two 160.. series bearings. Units are delivered oil lubricated.

Primarily used as overrunning or indexing clutches, the cover combination is chosen according to the type of drive, as shown overleaf. D2 cover is used to close the unit.

It is equipped with two screws for oil filling, drain and level.The shaft seal is a V-ring type. Cover and seal have been designed to be oil proof with minimum drag torque.

We recommend the unit is supplied assembled. Please specify inner race direction of rotation seen from the D2 flange.

AL..F2D2, AL...F4D2

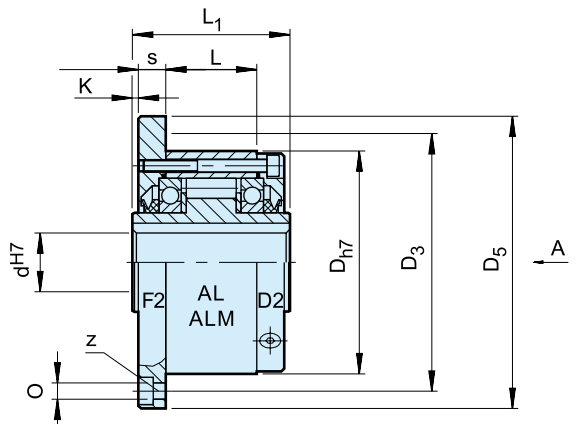

AL..F2D2

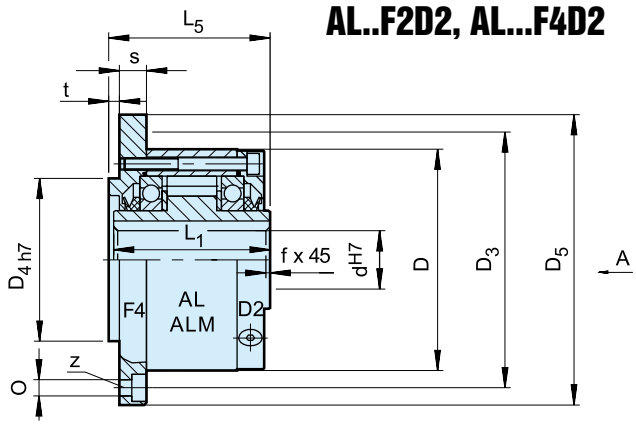

AL..F4D2

Type	Size		Overrunning speeds						Number								Weight	Drag torque
	d^{H7} [mm]	T_{KN} 1) [Nm]	n_{imax} 2) [min⁻¹]	n_{amax} 3) [min⁻¹]	D_{h7} [mm]	L_1 [mm]	D_5 [mm]	D_3 [mm]	z	O [mm]	D_{4h7} [mm]	t [mm]	L_5 [mm]	K [mm]	s [mm]	f [mm]	[kg]	T_R [Ncm]
AL..F2D2 AL..F4D2	12	55	2500	7200	62	42	85	72	3	5,5	42	3	44	0,5	10,3	0,5	0,9	11
	15	125	1900	6500	68	52	92	78	3	5,5	47	3	54	0,5	10,3	0,8	1,3	15
	20	181	1600	5600	75	57	98	85	4	5,5	55	3	59	0,5	10,8	0,8	1,7	18
	25	288	1400	4500	90	60	118	104	4	6,6	68	3	62	0,5	10,5	1	2,6	36
	30	500	1300	4100	100	68	128	114	6	6,6	75	3	70	0,5	11,3	1	3,5	48
	35	725	1100	3800	110	74	138	124	6	6,6	80	3,5	76	1	11,8	1	4,5	60
	40	1025	950	3400	125	86	160	142	6	9	90	3,5	88	1	13,8	1,5	6,9	84
	45	1125	900	3200	130	86	165	146	8	9	95	3,5	88	1	13,8	1,5	7,1	94
	50	2125	850	2800	150	92	185	166	8	9	110	4	94	1	12,8	1,5	10,1	128
	55	2625	720	2650	160	104	204	182	8	11	115	4	106	1,5	16,8	2	13,1	150
	60	3500	680	2450	170	114	214	192	10	11	125	4	116	1,5	16,3	2	15,6	160
	70	5750	580	2150	190	134	234	212	10	11	140	4	136	1,5	17,8	2,5	20,4	360
	80	8500	480	1900	210	144	254	232	10	11	160	4	146,3	1,5	20,3	2,5	26,7	360
	90	14500	380	1700	230	158	278	254	10	14	180	4,5	161	1,5	20	3	39	680
	100	20000	350	1450	270	182	335	305	10	18	210	5	184	2,5	28	3	66	880
	120	31250	250	1250	310	202	375	345	12	18	240	5	204	2,5	28,5	3	91	1200
	150	70000	180	980	400	246	485	445	12	22	310	5	249	2,5	31	4	186	1350
	200	175000	120	750	520	326	625	565	18	26	400	5	328	3	40	5	425	4200
	250	287500	100	620	610	396	740	680	20	33	480	5	398	3	45	5	680	6500
ALM..F2D2 ALM..F4D2	25	388	1100	2800	90	60	118	104	4	6,6	68	3	62	0,5	10,5	1	2,7	41
	30	588	1000	2500	100	68	128	114	6	6,6	75	3	70	0,5	11,3	1	3,65	64
	35	838	900	2400	110	74	138	124	6	6,6	80	3,5	76	1	11,8	1	4,7	76

NOTES

1) $T_{max} = 2 \times T_{KN}$
» Refer to Selection page 7 to 11

2) Inner race overruns

3) Outer race overruns
Keyway to DIN 6885.1

When ordering, please specify direction of rotation seen from arrow
A“: „R“ Inner race overruns in clockwise direction„L“ Inner race overruns in counterclockwise

» Refer to mounting and maintenance instructions page 12 to 13

MOUNTING EXAMPLE

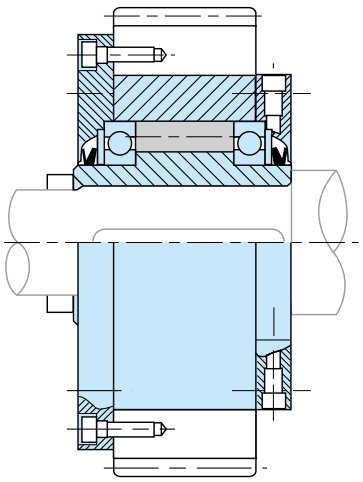

ALP..F7D7
ALMP..F7D7

TYPE

Type ALP..F7D7 is a roller type freewheel, self-contained, sealed and bearing supported using two 160.. series bearings. Unit is not delivered oil lubricated.

This cover combination is mostly used as an overrunning or indexing clutch as shown overleaf. A keyway is machined on the outer race for the connection to the drive or driven member centered on its outside. D7 cover is used to close the unit. It is equipped with two screws for oil filling, drain and level. The shaft seal is a V-ring type. Cover and seal have been designed to be oil proof with minimum drag torque.

ALP..F7D7, ALMP..F7D7

ALP..F7D7

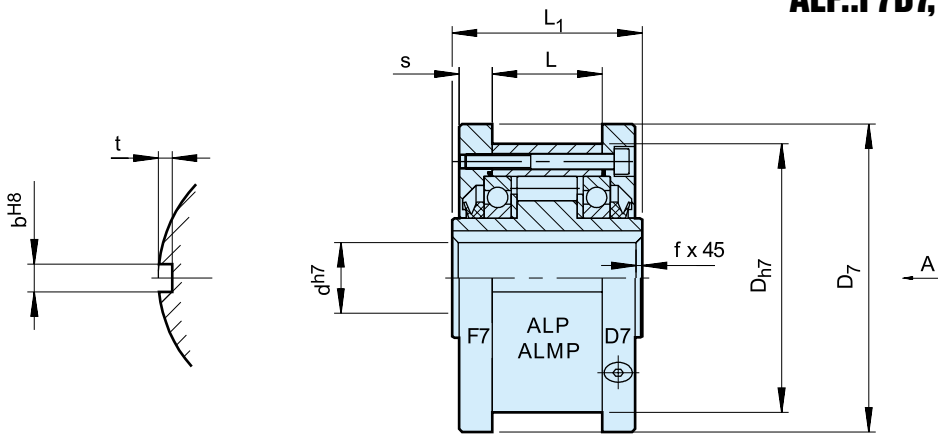

Type	Size		Overrunning speedsn										Weight	Drag torque
	d^{H7} [mm]	T_{KN} 1) [Nm]	n_{imax} 2) [min⁻¹]	n_{amax} 3) [min⁻¹]	D_{h7} [mm]	L_1 [mm]	D_7 [mm]	s [mm]	L [mm]	b^{H8} [mm]	t [mm]	f [mm]	[kg]	T_R [Ncm]
ALP..F7D7	12	55	2500	7200	62	42	70	10,4	20	4	2,4	0,5	1,0	11
	15	125	1900	6500	68	52	76	11,4	28	5	2,9	0,8	1,4	15
	20	181	1600	5600	75	57	84	10,9	34	6	3,5	0,8	1,9	18
	25	288	1400	4500	90	60	99	11,9	35	8	4,1	1	2,8	36
	30	500	1300	4100	100	68	109	11,9	43	8	4,1	1	3,7	45
	35	725	1100	3800	110	74	119	13,4	45	10	4,7	1	4,7	60
	40	1025	950	3400	125	86	135	15,4	53	12	4,9	1,5	7,1	84
	45	1125	900	3200	130	86	140	15,4	53	14	5,5	1,5	7,4	94
	50	2125	850	2800	150	92	160	12,9	64	14	5,5	1,5	10,4	128
	55	2625	720	2650	160	104	170	17,5	66	16	6,2	2	13,4	150
	60	3500	680	2450	170	114	182	16,5	78	18	6,8	2	15,9	160
	70	5750	580	2150	190	134	202	18	95	20	7,4	2,5	20,8	360
	80	8500	480	1900	210	144	222	20,5	100	22	8,5	2,5	27,1	360
	90	14500	380	1700	230	158	242	20	115	25	8,7	3	39,4	680
	100	20000	350	1450	270	182	282	28,5	120	28	9,9	3	66,4	880
	120	31250	250	1250	310	202	322	22,5	152	32	11,1	3	91,5	1200
	150	70000	180	980	400	246	412	31	180	36	12,3	4	187	1350
	200	175000	120	750	520	326	540	40	240	45	15	5	430	4200
	250	287500	100	620	610	396	630	45	300	45	15	5	688	6500
ALMP F7D7	25	388	1100	2800	90	60	99	11,9	35	8	4,1	1	2,9	41
	30	588	1000	2500	100	68	109	11,9	43	8	4,1	1	3,85	64
	35	838	900	2400	110	74	119	13,4	45	10	4,7	1	4,9	76

NOTES

1) $T_{max} = 2 \times T_{KN}$
» Refer to Selection page 7 to 11

2) Inner race overruns

3) Outer race overruns

Keyway to DIN 6885.1
When ordering, please specify direction of rotation seen from arrow „A“: „R“ Inner race overruns in clockwise direction, „L“ Inner race overruns in counterclockwise direction

» Refer to mounting and maintenance instructions page 12 to 13

MOUNTING EXAMPLE

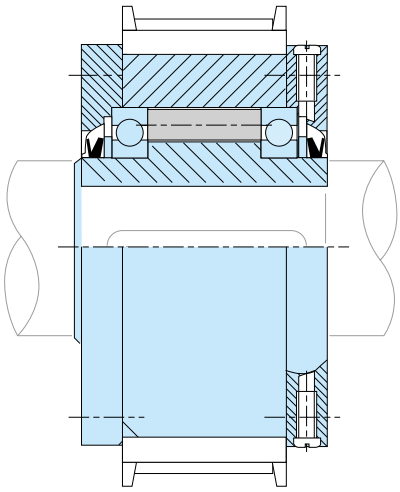

AL..KMSD2

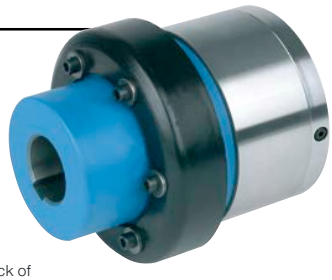

Back of
AL..KMSD2

TYPE

Type AL..KMSD2 is a roller type freewheel, self-contained, sealed and bearing supported, using two 160.. series bearings. Unit is delivered oil lubricated. This combination is used as overrunning clutch as shown overleaf.

In this design, a standard AL freewheel is connected to a KMS flexible coupling for in-line mounting. The KMS type is a rugged coupling, economical and suitable for many applications. D2 cover is used to close the unit. It is equipped with two screws for oil filling, drain and level. We recommend the unit is supplied assembled.

Please specify inner race direction of rotation seen from the D2 flange. Refer to manufacturer's catalogue to check coupling selection.

AL..KMSD2

AL..KMSD2

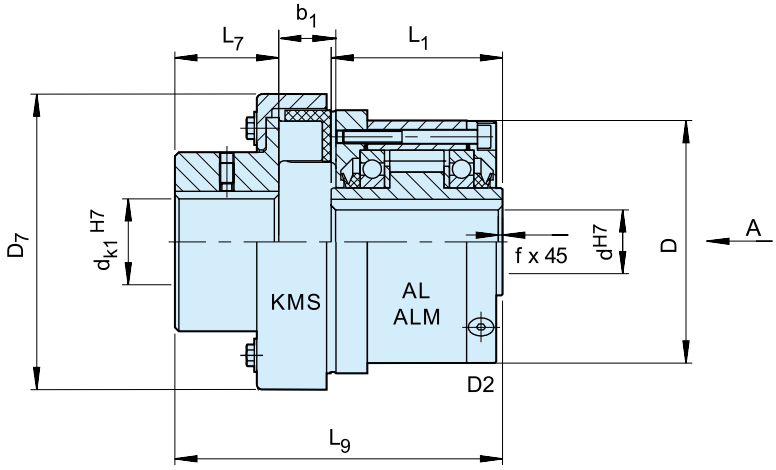

Coupling half: keyway tolerance P9

Type	Size			Overrunning speeds									Weight
	d^{H7} [mm]	KMS	T_{KN} [Nm]	n_{Imax} 1) [min⁻¹]	n_{amax} 2) [min⁻¹]	d_{K1}^{H7} [mm]	D [mm]	L_1 [mm]	D_7 [mm]	L_7 [mm]	L_9 [mm]	b_1 [mm]	[kg]
AL..KMSD2	12	4	50	2500	6000	7... 35	62	42	78	40	100	18	2,10
	15	6,3	79	1900	6000	12... 40	68	52	90	45	116	20	2,70
	20	10	125	1600	5600	10... 45	75	57	117	48	123,5	17	3,80
	25	10	125	1400	4500	10... 45	90	60	117	48	126,5	17	4,4
	30	16	200	1300	4100	10... 50	100	68	129	52	140	19	5,9
	35	25	313	1100	3800	15... 55	110	74	134	57	155	22	8,1
	40	40	500	950	3400	20... 60	125	86	155	61	173	26	11,4
	45	63	788	900	3200	20... 70	130	86	175	67	186	30	13,3
	50	100	1250	850	2800	25... 75	150	92	196	75	208,5	35	19,1
	55	100	1250	720	2650	25... 75	160	104	196	75	216,5	35	20,4
	60	160	2000	680	2450	30... 80	170	114	223	82	243	41	27,1
	70	250	3125	580	2150	35... 90	190	134	252	89	277,5	47	40,4
	80	400	5000	480	1900	45... 100	210	144	290	97	305	56	57
	90	630	7875	380	1700	60... 120	230	158	330	116	346,5	64	87
	100	1000	12500	350	1450	75... 140	270	182	378	140	386	75	131
	120	1600	20000	250	1250	90... 160	310	202	432	160	430	85	196
	150	On Request											
	200												
	250												
ALM.. KMSD2	25	16	200	1100	2800	12... 50	90	60	117	52	132,5	19	4,4
	30	25	313	1000	2500	15... 55	100	68	129	57	150	22	5,9
	35	40	500	900	2400	18... 60	110	74	134	61	163	26	8,1

NOTES

1) Inner race overruns

2) Outer race overruns

Keyway to DIN 6885.1
When ordering, please specify bore ø d_k and direction of rotation seen from arrow „A“: „R“ Inner race overruns in clockwise direction, „L“ Inner race overruns in counterclockwise direction

» Refer to mounting and maintenance instructions page 12 to 13

MOUNTING EXAMPLE

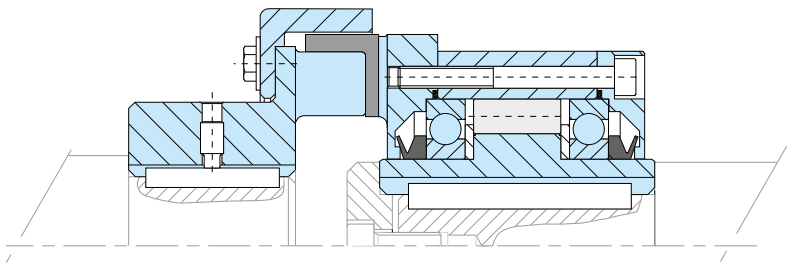

AL..KEED2

Back of
AL..KEED2

TYPE

Type AL..KEED2 is a roller type freewheel, self-contained, sealed and bearing supported, using two 160.. series bearings. Unit is delivered oil lubricated.

This combination is used as overrunning clutch as shown overleaf. In this design, a standard AL freewheel is connected to a flexible coupling for in-line mounting.

The KEE type is a high performance coupling used to damp torsional vibrations and to accept misalignement without excess bearing loads. D2 cover is used to close the unit. It is equipped with two screws for oil filling, drain and level. We recommend the unit is supplied assembled. Please specify inner race direction of rotation seen from the D2 flange. Refer to manufacturer's catalogue to check coupling selection.

AL..KEED2

AL..KEED2

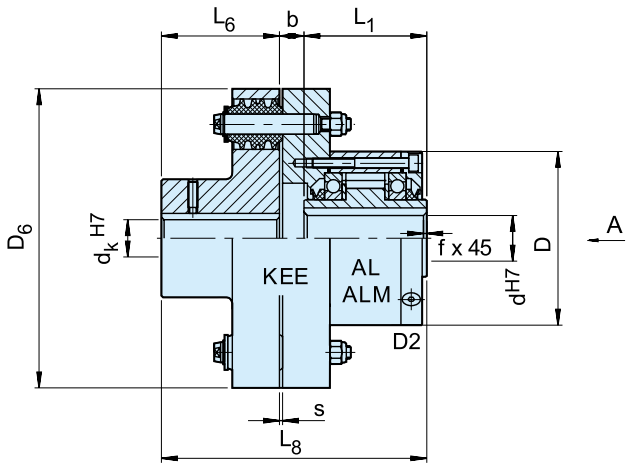

Type	Size			Overrunning speeds											Weight
	d^{H7} [mm]	KEE	T_{KN} [Nm]	n_{imax} 1) [min⁻¹]	n_{amax} 2) [min⁻¹]	d_K^{H7} [mm]	D [mm]	L_1 [mm]	D_6 [mm]	L_6 [mm]	L_8 [mm]	b [mm]	s [mm]	f [mm]	[kg]
AL..KEED2	12	2	55	2500	6000	12...25	62	42	97	35	90	13	3	0,5	3
	15	3	122	1900	6000	16...30	68	52	112	40	110	18	3	0,8	4,4
	20	3	122	1600	5600	16...30	75	57	112	40	114,5	17,5	3	0,8	4,6
	25	4	288	1400	4500	20...40	90	60	130	50	127,5	17,5	3	1	6,4
	30	5	500	1300	4100	20...50	100	68	160	60	148	20	2	1	11
	35	6	725	1100	3800	25...65	110	74	190	75	168	19	2	1	17
	40	6	1025	950	3400	25...65	125	86	190	75	178	17	2	1,5	19
	45	6	1050	900	3200	25...65	130	86	190	75	178	17	2	1,5	19
	50	7	1750	850	2800	30...75	150	92	225	90	207	25	2,5	1,5	31
	55	8	2625	720	2650	35...90	160	104	270	100	233,5	29,5	3	2	47
	60	8	2750	680	2450	35...90	170	114	270	100	244	30	3	2	49
	70	10	5750	580	2150	45...110	190	134	340	140	312,5	38,5	3	2,5	90
	80	11	8500	480	1900	55...125	210	144	380	160	340	36	3	2,5	107
	90	12	13750	380	1700	65...140	230	158	440	180	388	50	3,5	3	170
	100	14	20000	350	1450	75...160	270	182	500	200	422,5	40,5	3,5	3	230
	120	16	30000	250	1250	85...180	310	202	560	220	471	49	4	3	330
	150	18	43750	180	980	95...200	400	246	640	250	543	47	4	4	500
	200	22	97500	120	750	125...250	520	326	880	320	700,5	54,5	4,5	5	965
	250	28	250000	100	620	160...320	610	396	1160	400	868	72	5	5	1725
ALM..KEED2	25	4	288	1100	2800	20...40	90	60	130	50	127,5	17,5	3	1	6,4
	30	5	588	1000	2500	20...50	100	68	160	60	148	20	2	1	11
	35	6	838	900	2400	25...65	110	74	190	75	168	19	2	1	17

NOTES

1) Inner race overrunst

2) Outer race overruns

Keyway to DIN 6885.1
When ordering, please specify bore ø d_k and direction of rotation seen from arrow „A“: „R“ Inner race overruns in clockwise direction, „L“ Inner race overruns in counterclockwise direction

» Refer to mounting and maintenance instructions page 12 to 13

MOUNTING EXAMPLE

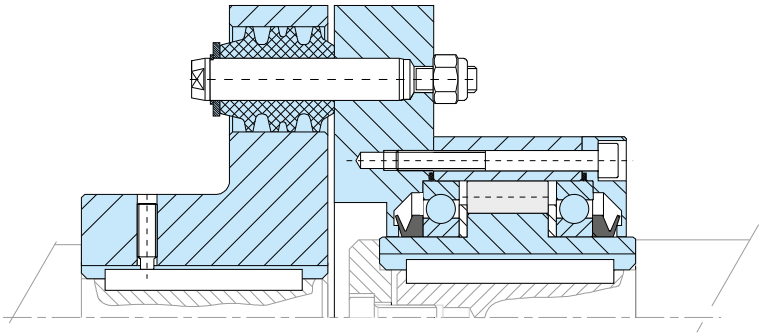

SMZ

TYPE

Type SMZ is a sealed, sprag type freewheel, bearing supported using two 60..ZZ series grease lubricated bearings.

Units are delivered grease lubricated ready for installation. SMZ units are intended as multipurpose, to be used in various applications. A typical mounting arrangement is shown on the following page. The inner race is keyed to the shaft. The inside diameter of the outer race (dimension D4) should be used as the mounting register for the connected parts (sprocket, pulley, gear, torque arm). The mounting spigot should be to g6 tolerance.

SMZ

SMZ

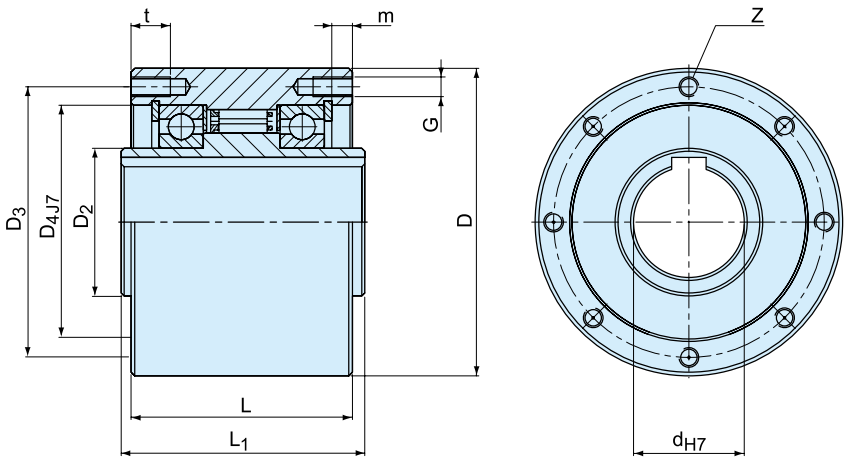

Type	Size		Overrunning speeds									Number			Weight
	d^{H7} [mm]	T_{KN} 1) [Nm]	n_{imax} 2) [min⁻¹]	n_{amax} 3) [min⁻¹]	D [mm]	D_2 [mm]	D_3 [mm]	D_4^{J7} [mm]	L [mm]	L_1 [mm]	G [mm]	z [mm]	t [mm]	m [mm]	[kg]
SMZ	20	300	1600	700	80	30	68	55	65	67	M6	6	12	7,6	2
	30	1035	1500	500	100	45	88	75	80	82	M8	6	16	8,9	3,7
	35	1100	1400	300	110	50	95	80	85	87	M8	6	16	8,7	4,8
	45	1750	1300	300	125	60	110	95	90	92	M8	8	16	8,4	6,2
	60	3400	1100	250	155	80	140	125	100	102	M8	8	16	9,1	10,2
	70	4300	1000	250	175	95	162	140	103	105	M8	8	16	8,6	13,2

NOTES

1) $T_{max} = 2 \times T_{KN}$
» Refer to Selection page 7 to 11

2) Inner race overruns

3) Outer race overruns
Keyway to DIN 6885.1

» Refer to mounting and maintenance instructions page 12 to 13

MOUNTING EXAMPLE

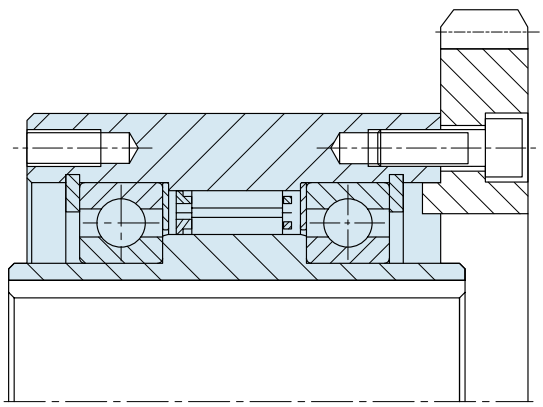

FSO 300-700, FSO-GR 300-700, HPI 300-700

TYPE

FSO..GR

Types FSO, FSO-GR, and HPI 300 to 700 are sprag type freewheels self-contained, sealed and bearing supported, using two ball bearings.

Units are delivered oil or grease lubricated according to the type. It is a Formsprag USA design with a »full sprag complement« that gives a very high torque for a given diameter. Any overload is resisted by a sprag to sprag abutment, avoiding a sprag tilt over. Types FSO and HPI are oil lubricated and use standard shaft lip seals. Type FSO-GR is grease lubricated and can be equipped with contact free labyrinth seals. Type HPI is specially designed for high speed indexing applications.

FSO, FSO-GR, HPI 300-700

FSO

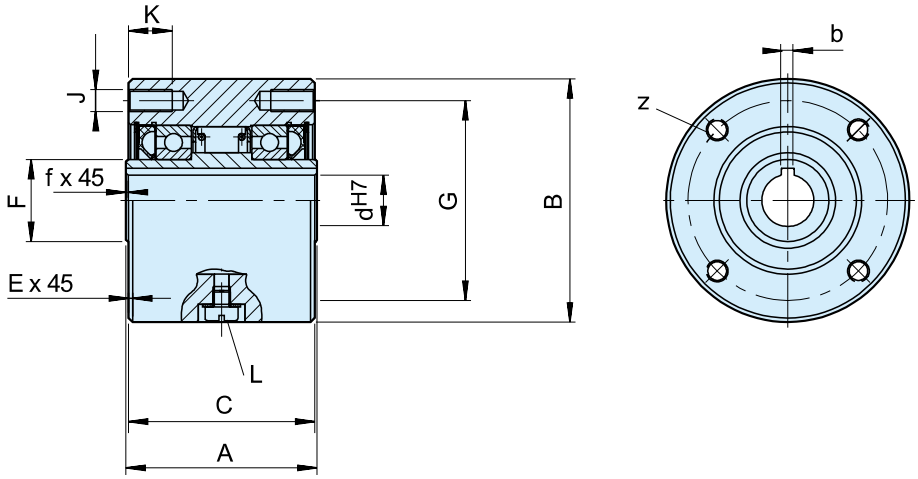

Type	Size		Overrunning speeds										Number					Lubricant			Weight	Drag torque
		T_{KN} 1) [Nm]	FSO n_{max} 2) [min⁻¹]	FSO-GR n_{max} 3) [min⁻¹]	d^{H7}-bxh [mm]	d 4) min-max [mm]	A [mm]	B -0,05 [mm]	C [mm]	E [mm]	F [mm]	G [mm]	z	J	K [mm]	L	f [mm]	FSO [ml]	FSO..GR [ml]	HPI [ml]	[kg]	T_R [Ncm]
FSO FSO-GR HPI	300	379	3000/900	3600/900	15-5x5	12... 19	63,50	76,20	60,45	1,6	28,58	66,67	4	M8	13	M6	0,8	7	10	14	1,6	18
	400	407	2800/850	3600/850	18-6x6	12... 22	69,85	88,90	68,07	1,6	30	73	4	M8	13	M6	0,8	10	20	20	2,7	27
	500	1621	2500/800	3000/800	30-8x7	19... 33	88,90	107,95	85,73	1,6	45	92	4	M8	16	M6	1,5	22	35	35	4,8	31
	600	3105	2200/750	2400/750	40-12x8	24... 57	95,25	136,525	92,2	1,6	63,5	120,6	6	M8	16	M6	1,6	52	84	84	8,6	62
					45-14x9																	
					50-14x6																	
					50-14x9																	
	700	6900	1600/450	2000/450	60-18x11	48... 82	127,00	180,975	123,85	1,6	90	158,75	8*	M10*	20	M6	1,6	168	280	280	19	156
					65-18x11																	
					70-20x12						101,6 5)											

NOTES

1) $T_{max} = 1.5 \times T_{KN}$
» Refer to Selection page 7 to 11

2) Inner race/outer race

3) Inner race/outer race labyrinth seal

4) Inch bore available on request

5) Only for oversize bore
Size 600 > 50 mm
Size 700 > 75 mm

*) 6 holes equally spaced at 60° plus
2 extra-holes at 180°

» Refer to mounting and maintenance instructions page 12 to 13

MOUNTING EXAMPLE

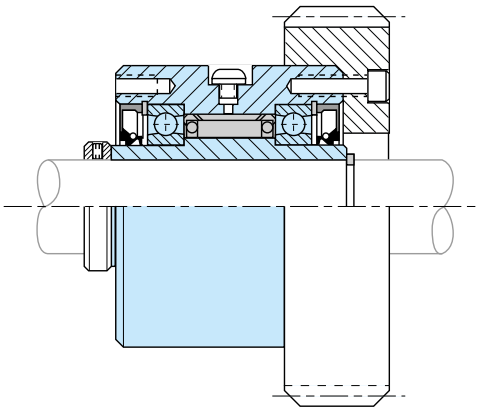

FS 750-1027, FSO 750-1027, HPI 750-1027

TYPE

FSO

Types FS, FSO, and HPI 750 to 1027 are sprag type freewheels self-contained, sealed and bearing supported, using two ball bearings.

Units are delivered oil or grease lubricated according to the type. It is a Formsprag USA design that uses tall sprags with multi-radius active surfaces. Designed specially for large size freewheels to compensate for any eccentricity due to bearing wear. Types FS and HPI are oil lubricated and use standard shaft lip seals. Type FSO is grease lubricated and equipped with special grease seals.

Type HPI is specially designed for high speed indexing applications. Each of the different models show a range of standard metric bore diameters. We can supply any bore size between the minimum and maximum specified in the table, including imperial sizes.

FS, FSO, HPI 750-1027

FSO

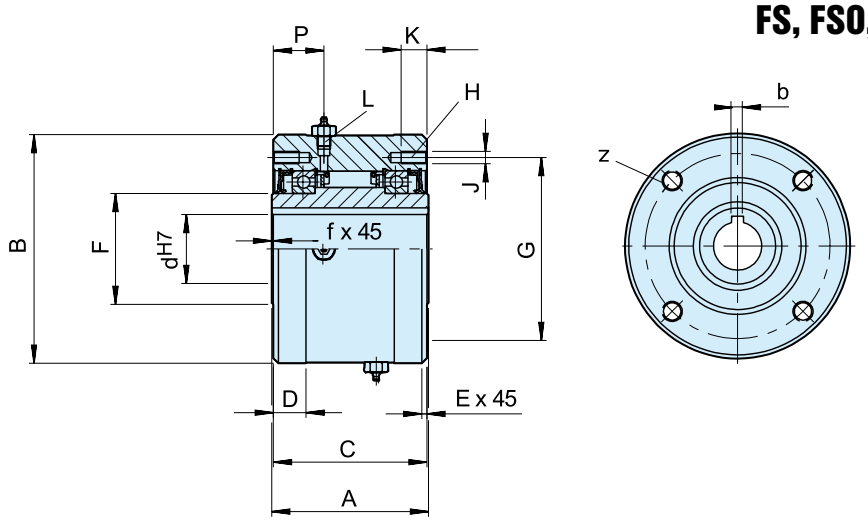

Type	Size		Overrunning speeds											Number						Lubricant			Weight	Drag torque
		T_{KN} 1) [Nm]	FSO n_{max} 2) [min⁻¹]	FS n_{max} 3) [min⁻¹]	d^{H7}-bxh [mm]	d 4) min-max [mm]	A [mm]	B 5) -0,05 [mm]	C [mm]	D [mm]	E [mm]	F [mm]	G [mm]	z	J	K [mm]	L [inch]	P [mm]	f [mm]	FSO [ml]	HPI [ml]	FS [ml]	[kg]	T_R [Ncm]
FSO FS HPI	750	9660	1800/650	1000/650	65-18x11	57–87	152,4	222,25	149,2	31,7	1,6	107,74	177,8	8*	M12*	25	1/2-20	49,2	1,6	222	384	207	38	5,08
					70-20x12																			
					75-20x12																			
					80-22x14																			
					85-22x14																			
	800	17940	1500/525	850/525	80-22x14	66–112	152,4	254,00	149,2	31,7	1,6	139,70	227,0	8	M12	25	1/2-20	49,2	1,6	222	444	251	46	7,12
					90-25x14																			
					100-28x16																			
					110-28x16																			
	900	24408	1350/500	700/500	100-28x16	92–138	161,9	304,80	158,7	34,9	1,6	161,92	247,65	10	M16	32	1/2-20	54	1,6	532	473	340	71	8,47
					110-28x16																			
					120-32x18																			
					130-32x18																			
	1027	36612	700/375	500/375	130-32x18	125-177	168	381,00	165,1	34,9	3,2	228,60	298,45	12	M16	32	1/2-20	54	3,2	651	946	473	113	13,56
					150-36x20																			
					175-45x25																			

NOTES

1) $T_{max} = 1.5 \times T_{KN}$
» Refer to Selection page 7 to 11

2) Inner race/outer race

3) Inner race/outer race labyrinth seal

4) Inch bore available on request

*) 6 holes equally spaced at 60° plus 2 extra-holes at 180°

5) Tolerance for sizes 900 and 1027: -0,08

MOUNTING EXAMPLE

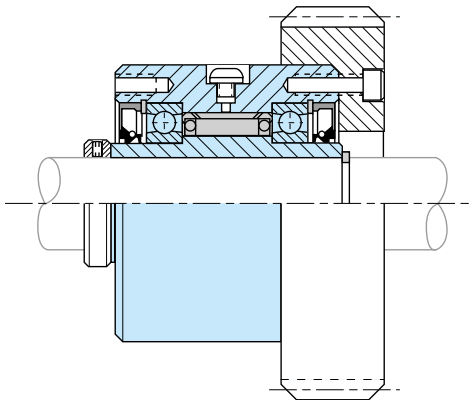

AL..G

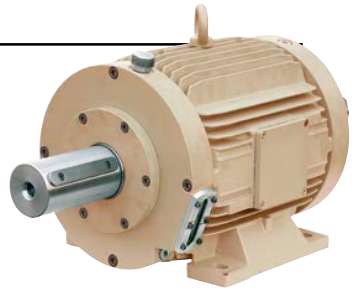

TYPE

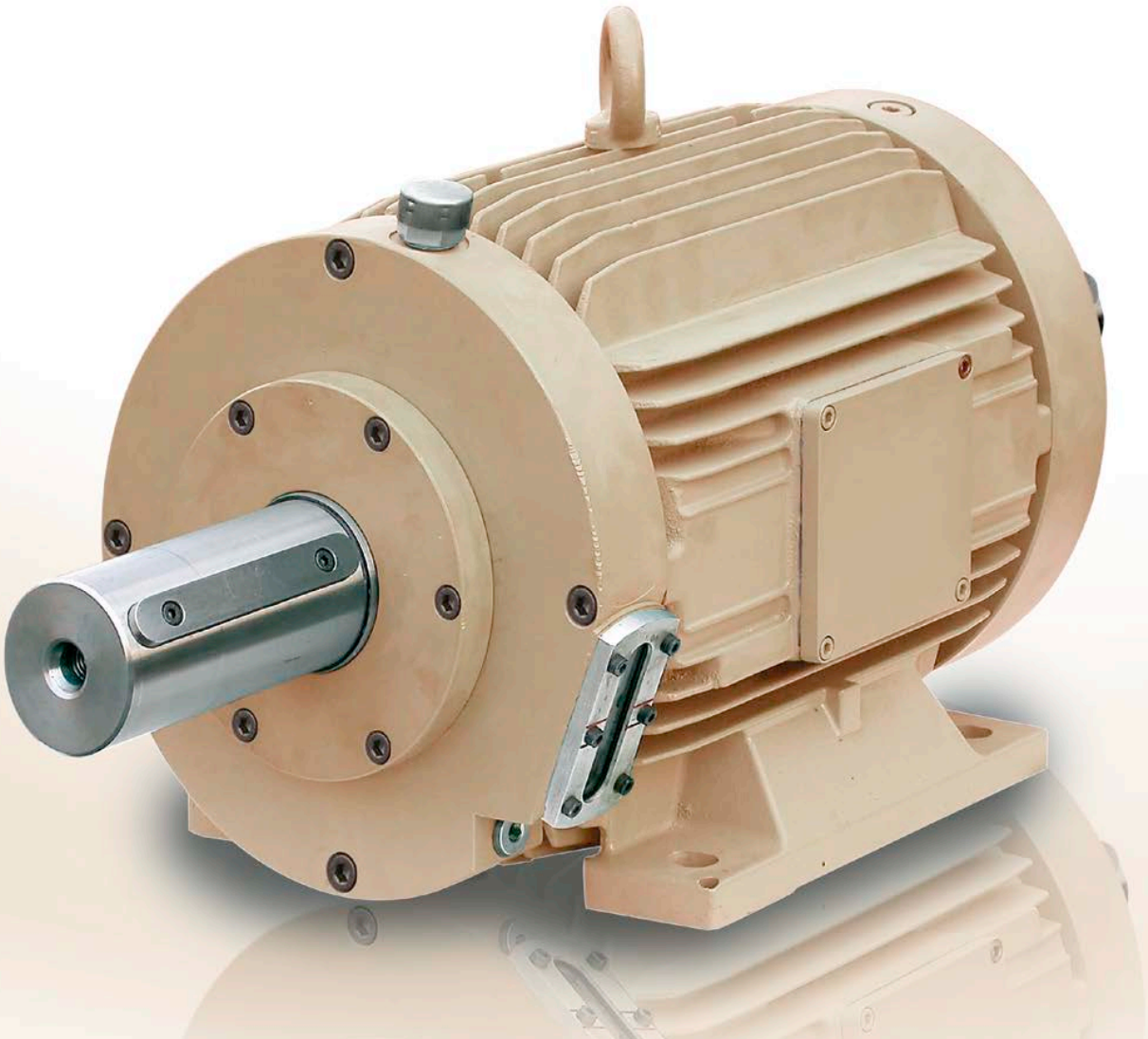

Type AL..G is a roller type freewheel bearing supported and self-contained in a cast iron housing. Standard lubrication is oil.

This type is designed for dual or standby drives on large equipment requiring high power at high speeds such as, industrial fans, pumps, and turbines. The housing provides a cooling surface, a large oil volume and maximum safety for equipment running continuously without supervision. Units of this type must be connected with the driver and driven machine using flexible couplings.

Integrated forced lubrication allows hydrodynamic contact free operation during overrunning. The given overrunning speeds are valid for a maximum ambient temperature of 40°C. On request additional air cooling can be provided.

AL..G

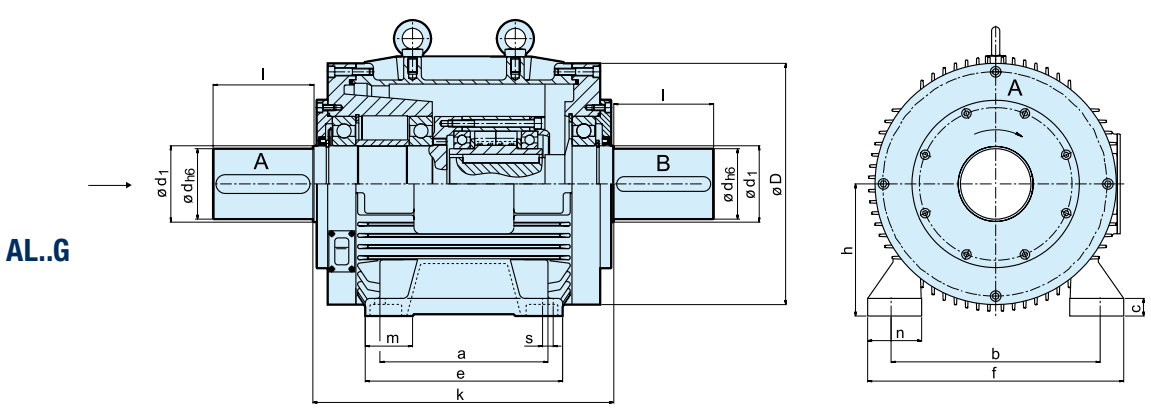

Type	Size		Overrunning Speed shaft A															Weight
		T_{KN} 1) [Nm]	n_{max} [min⁻¹]	d_{h6} [mm]	l [mm]	k [mm]	D [mm]	d_1 [mm]	h [mm]	m [mm]	n [mm]	f [mm]	e [mm]	a [mm]	b [mm]	s [mm]	c [mm]	[kg]
AL..G	30-G1	500	5500	30	80	280	194	45	100	33,5	42	200	175	140	160	14	14	50
	50-G3	2125	3400	50	140	430	310	80	160	58	71,5	318	260	210	254	18	22	115
	60-G3	3500	2900	60	140	430	310	80	160	58	71,5	318	260	210	254	18	22	125
	70-G3	5750	2600	70	140	430	310	80	160	58	71,5	318	260	210	254	18	22	138
	80-G4	8500	2400	80	170	510	434	95	225	80,5	92	436	346	286	356	22	30	284
	90-G4	14500	2000	90	170	510	434	130	225	80,5	92	436	346	286	356	22	30	300
	100-G4	20000	1500	100	210	510	434	130	225	80,5	92	436	346	286	356	22	30	330
	120-G5	31250	1300	120	210	800	610	140	315	100	131	620	550	457	508	30	46	980
	150-G5	70000	1200	150	250	800	610	190	315	100	131	620	550	457	508	30	46	1100

NOTES

1) $T_{max} = 2 \times T_{KN}$
» Refer to Selection page 7 to 13

Keyway to DIN 6885.1

rotation seen from shaft „A“: „R“ Shaft „A“ overruns in clockwise direction, „L“ Shaft „A“ overruns in counterclockwise direction
Note: The constant overrunning function must be performed by the driven shaft „A“

» Refer to mounting and maintenance instructions page 12 to 13

MOUNTING EXAMPLE

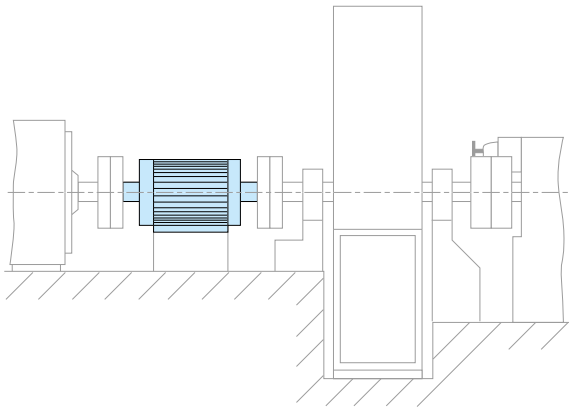

CEUS

TYPE

Type CEUS from the CECON product group is a roller type one way clutch bearing supported and self-contained in a cast iron housing. Standard lubrication is oil.

This type is designed for dual or standby drives on large equipment requiring high power at high speeds such as industrial fans, pumps, and turbines.

The housing provides a cooling surface, a large oil volume and maximum safety for equipment running continuously without supervision.

Units of this type must be connected with the driver and driven machine using flexible couplings. Integrated forced lubrication allows hydrodynamic contact free operation during overrunning. The oil is continuously filtered through internal strainers. Detailed catalogue over the full CECON range on request. The given overrunning speeds are valid for a maximum ambient temperature of 40°C.

CEUS

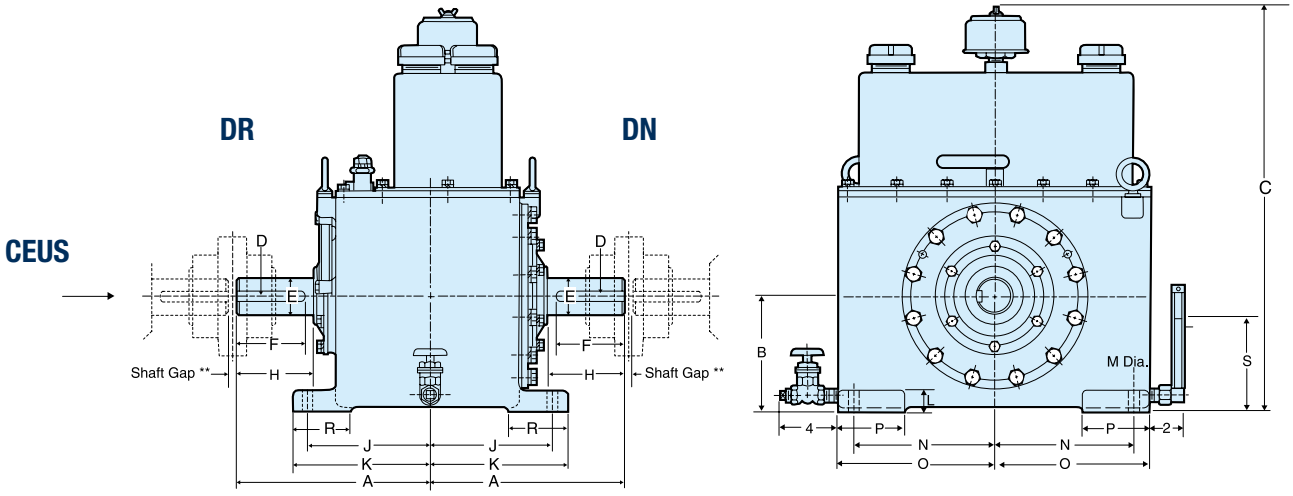

Type	Size		Overrunning Speed shaft DN																	Weight
		T_{KN} 1) [Nm]	n_{max} [min⁻¹]	A [mm]	B [mm]	C [mm]	D [mm]	E [mm]	F [mm]	H [mm]	J [mm]	K [mm]	L [mm]	M [mm]	N [mm]	O [mm]	P [mm]	R [mm]	S [mm]	[kg]
CEUS	5C	680	6000	215,90	120,65	546,1	9,40 x 4,83	39,69	76,20	81,03	139,70	161,80	31,75	17,53	171,45	193,55	79,25	79,25	95,25	100
	1M	1355	5600	249,17	146,05	596,9	9,40 x 4,83	44,45	95,25	98,30	161,80	184,15	31,75	17,53	161,80	206,25	88,90	88,90	117,35	146
	2M	2710	4200	295,15	174,50	647,7	15,75 x 7,87	58,74	114,30	117,35	187,20	209,55	31,75	17,53	212,60	238,00	101,60	88,90	139,70	200
	4M	5425	3600	325,37	196,85	698,5	15,75 x 7,87	69,85	133,35	136,40	196,85	222,25	31,75	17,53	228,60	254,00	101,60	101,60	155,45	255
	8M	10845	3000	374,65	218,95	742,95	22,10 x 11,18	84,14	152,40	155,45	231,65	260,35	38,10	20,57	222,25	273,05	101,60	101,60	171,45	354
	12M	16270	2500	433,32	244,35	793,75	25,40 x 12,70	98,48	171,45	176,28	273,05	301,50	38,10	26,92	231,65	288,80	114,30	114,30	190,50	545
	18M	24405	2300	481,08	285,75	857,25	25,40 x 12,70	109,54	190,50	195,33	295,15	326,90	44,45	33,27	260,35	330,20	127,00	127,00	225,30	726
	30M	40675	2000	533,40	323,85	952,5	31,75 x 15,75	128,59	215,90	218,95	333,25	374,65	44,45	33,27	323,85	393,70	139,70	139,70	254,00	908
	42M	56945	1700	580,90	368,30	1028,7	38,10 x 19,05	149,23	228,60	231,65	365,00	403,10	50,80	33,27	368,30	444,50	152,40	152,40	285,75	1134
	60M	81350	1400	628,65	406,40	1104,9	44,45 x 22,10	177,80	266,70	269,75	387,35	425,45	50,80	33,27	406,40	482,60	152,40	152,40	311,15	1361

NOTES

1) Torque selection procedure. Nominal torque of the application:

$$T_{appl}(Nm) = \frac{9550 \times P\ (kW)}{n\ (min^{-1})}$$

The CECON unit catalogue torque will be:

$$T_{KN} \geq T_{appl} \times 1{,}5$$

The dimensions are metric conversion of imperial ones

Rotation seen from shaft „DR“: „R“ Shaft „DR“ drives in clockwise direction, „L“ Shaft „DR“ drives in counterclockwise direction
Note: The constant overrunning function must be performed by the driven shaft „DN“

» Refer to mounting and maintenance instructions page 12 to 13

MOUNTING EXAMPLE

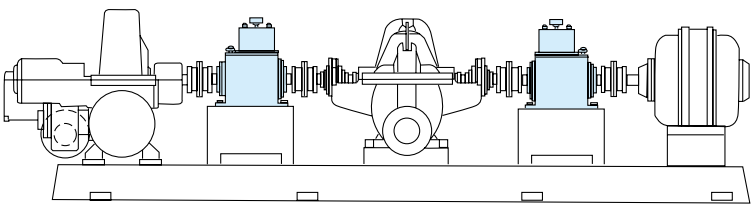

BC MA

TYPE

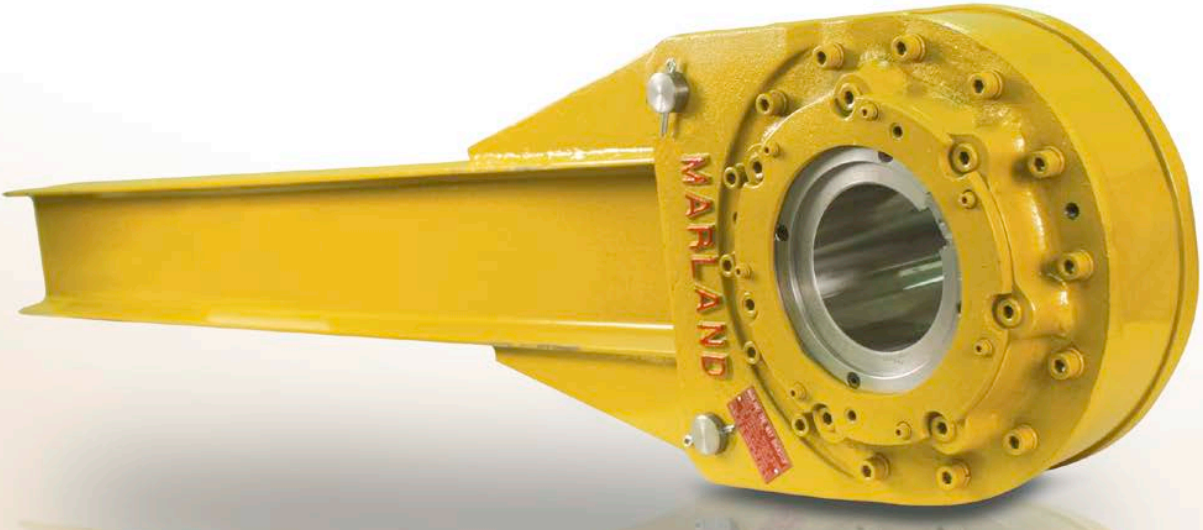

Type BC MA is a roller type backstop, bearing supported and self-contained. Standard lubrication is oil.

This type is designed to be mounted on the drive pulley shaft of large inclined conveyers. It is capable of working in the harsh environment of mine sites. The unit is symmetrical and can be mounted for desired free shaft rotation. The torque arm is a single “I“ beam section which is attached to the backstop with two precision ground torque arm pins. This greatly simplifies field installation. The arm may be placed up, down, or at any angle, and provides uniform loading on both cover plates. The preferred position is horizontal to reduce bearing loading for longer bearing life. The shaft fit should be f6 or f7. The clutch elements and ball bearings are continuously self-lubricated in a sealed oil chamber.

The seal package consists of:

- Double-lip oil seals outside the bearings to keep oil in and dirt out.
- Relubricable grease pocket and all metal graphited labyrinth grease seal.

Detailed catalog on request.

BC MA

BC MA

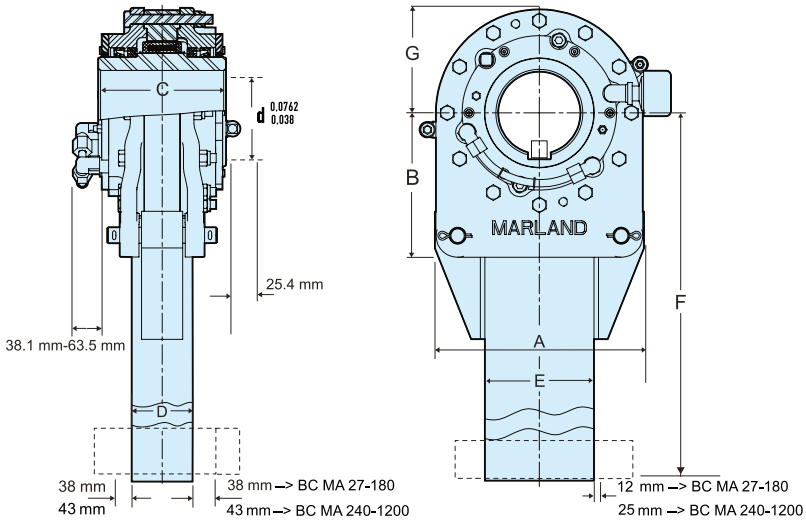

Type	Size	Bore		Overrunning Speed								Weight
		d_{max}	T_{KN} 1) [Nm]	n_{max} [min⁻¹]	A [mm]	B [mm]	C [mm]	D [mm]	E [mm]	F [mm]	G [mm]	[kg]
BC	27MA	165	36 607	150	384	254	222	98	178	1676	191	207
	45MA	180	61 012	135	445	289	235	105	203	1829	216	276
	63MA	205	85 417	120	498	311	244	127	254	1981	244	381
	90MA	235	122 024	105	584	362	276	140	305	2083	270	520
	135MA	265	183 035	90	654	406	314	143	381	2235	308	690
	180MA	300	244 047	80	772	419	330	159	457	2388	349	966
	240MA	360	325 396	70	876	457	387	162	508	2540	413	1242
	300MA	360	406 745	70	876	457	413	162	508	2745	413	1720
	375MA	460	508 432	60	1041	584	445	203	622	3048	495	2760
	540MA	540	732 142	60	1194	673	527	257	692	3658	578	4140
	720MA	540	976 271	60	1194	673	552	257	692	3658	578	4545
	940MA	540	1 274 600	60	1220	700	584	257	692	3960	610	5455
	1200MA	600	1 626 000	60	1320	750	625	267	762	4267	660	6591

NOTES

1) $T_{max} = 1{,}75 \times T_{KN}$

Inch bore available on request
Keyway to DIN 6885.1
For size 1200MA TBD

For more details see seperate catalog.

» Refer to mounting and maintenance instructions page 12 to 13

MOUNTING EXAMPLE

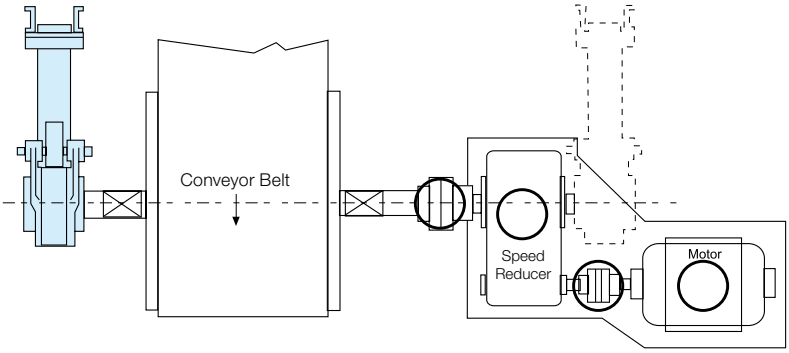

RDBR-E
RDBR-E-H

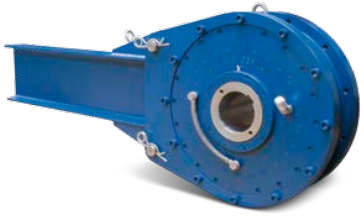

TYPE

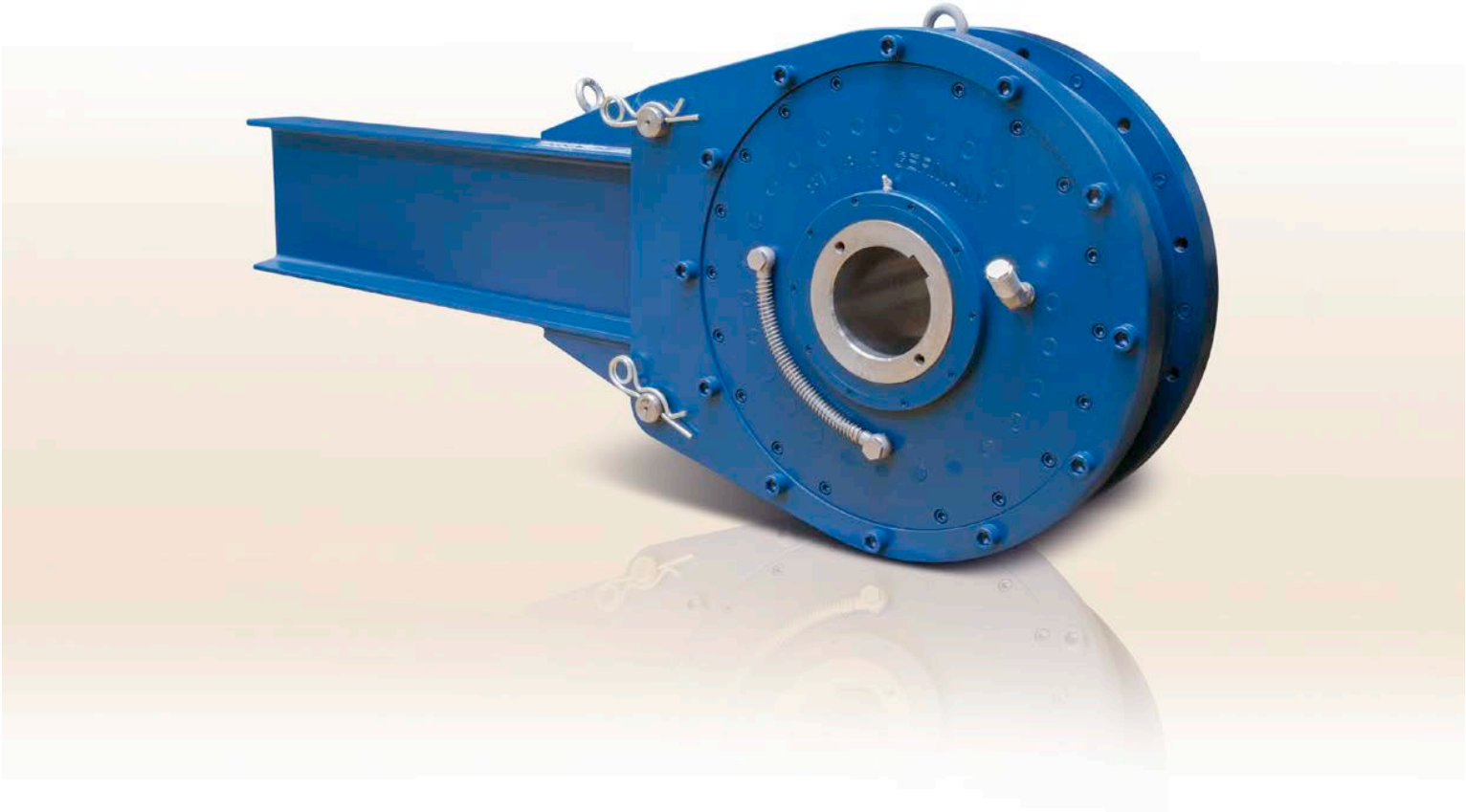

Backstops type RDBR-E are directly mounted on the drive shaft, e.g. of heavy duty conveyer belts, mixing drum drives and chain conveyors, when torque limiting / load sharing or the release function is required.

RDBR-E features a roller type backstop design with a fully bearing supported multidisc brake for the torque limiting function. The optional release function allows the tension of a jammed belt to be controlled released. Once the brake is fully opened, the capability of an unlimited rolling backwards makes maintenance safe and easy.

To activate the release function, a simple hydraulic hand pump or power pack can be used. A mechanical release is available on request. Backstops RDBR-E are self contained and oil lubricated.

A special sealing arrangement with grease packed labyrinth seal guarantees highest reliability under harsh conditions. The recommended shaft fit is H7/f6. The torque arm must not be rigidly fixed to the foundation. For security reasons a stopper in overrunning direction is recommended. When installed, the backstop must be axially secured.

RDBR-E, RDBR-E-H

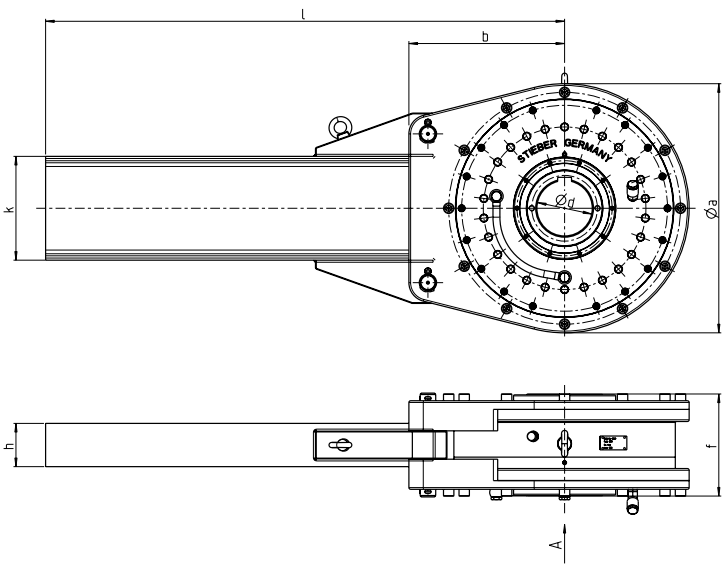

Type	Size											Weight
		d^{H7}_{max} 1) [mm]	T_r 2) [kNm]	n_{max} 3) [min⁻¹]	n_{rmax} 4) [min⁻¹]	a [mm]	b [mm]	h [mm]	k [mm]	f [mm]	l [mm]	[kg]
RDBR...-E RDBR...-E-H	280	150	50	175	175	660	410	119	280	295	1500	690
	300	160	75	150	150	720	450	125	300	295	1500	840
	360	190	120	130	130	780	500	137	340	350	1800	1160
	420	240	180	120	120	880	550	149	380	360	2000	1400
	500	320	330	100	100	1075	670	170	450	390	2200	2390

Sizes with a higher torque capacity are available on request.

NOTES

1) Keyway to DIN 6885.1

2) Maximal slipping torque.
A lower slipping torque can be set.

3) Maximal overrunning speed

4) Maximal speed rolling backwards, internal brake opened

When ordering, please specify direction of rotating seen from arrow »A«.
»R« Inner race overruns in clockwise direction.
»L« Inner race overruns in counterclockwise Direction

Refer to mounting and maintenance instructions pages 12 to 13

MOUNTING EXAMPLE

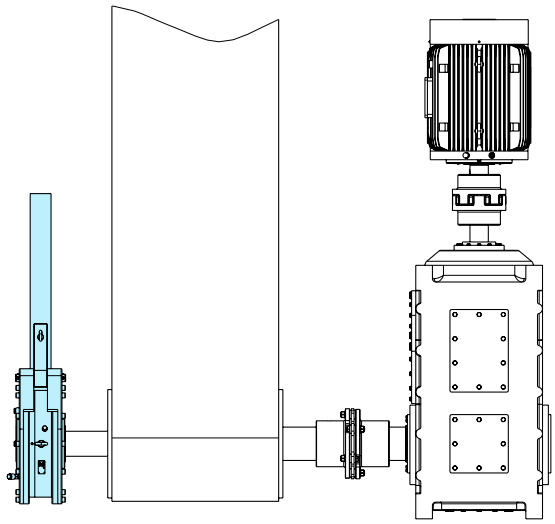

RSCI 20-130

TYPE

Type RSCI is a centrifugal lift off sprag type freewheel with the inner race rotating. Only the inner race is designed for freewheeling. It is a non self-supported type.

Bearings must be provided to ensure concentricity of the inner and outer races and support axial and radial loads, as shown overleaf. Concentricity and run-out limits must be observed. The RSCI type accepts all types of lubricant currently used in power transmission equipment.

It is possible to mount these freewheels directly in gear-boxes without separate lubrication. An oil mist is generally sufficient. Grease lubrication may be acceptable if the unit works mostly in overrunning condition, as on E-motors.

When used as a backstop, it must be checked that the overrunning speed will not go below the minimum speed given in the caracteristics table. Please refer to page 76 (RSCI 180–300) for further information.

RSCI 20-130

RSCI

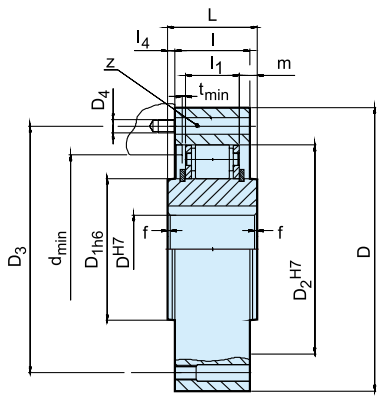

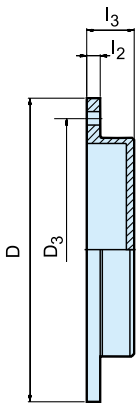

F8

Type	Size		Speeds								Number											Weight	
	d^{H7} [mm]	T_{KN} 1) [Nm]	n_{max} 2) [min⁻¹]	n_{imin} 3) [min⁻¹]	n_{imax} 4) [min⁻¹]	D 5) [mm]	D_{1h6} [mm]	D_2^{H7} [mm]	D_3 [mm]	D_4	z	L [mm]	l [mm]	l_1 [mm]	l_4 [mm]	f×45° [mm]	d_{min} [mm]	m [mm]	t_{min} [mm]	l_2 [mm]	l_3 [mm]	RSCI [kg]	F8 [kg]
RSCI	20	212	315	750	15000	90	36	66	78	M6	6	35	35	25	0	0,8	52	5	1	8	16	1,5	0,3
	25	319	300	725	14000	95	40	70	82	M6	6	35	35	25	0	1,0	56	5	1	8	16	1,6	0,4
	30	375	290	700	11000	100	45	75	87	M6	6	35	35	25	0	1,5	62	5	1	8	16	1,8	0,4
	35	550	280	670	11000	110	50	80	96	M6	8	35	35	25	0	1,5	66	5	1	8	16	2,1	0,5
	40	800	260	630	8000	125	60	90	108	M8	8	35	35	25	0	1,5	76	5	1	10	21	2,7	0,7
	45	912	255	610	7000	130	65	95	112	M8	8	35	35	25	0	1,5	82	5	1	10	21	2,9	0,9
	50	1400	235	560	6000	150	80	110	132	M8	8	40	40	25	0	1,5	100	7,5	1	10	21	4,3	1
	60	2350	210	510	6000	175	85	125	155	M10	8	60	50	36	5	2,0	110	12	2	12	35	6,5	1,8
	70	3050	195	470	4000	190	100	140	165	M10	12	60	50	36	5	2,0	120	12	2	12	35	8,6	1,9
	80	4500	180	440	4000	210	120	160	185	M10	12	70	60	36	5	2,0	140	17	3	12	35	12,5	2,6
	80M	5800	155	375	4000	210	120	160	185	M10	12	70	60	46	5	2,0	140	12	2	12	35	13,1	2,6
	90	5600	170	410	3000	230	140	180	206	M12	12	80	70	36	5	2,5	165	22	3	12	35	17,4	3,0
	90M	8700	145	350	3000	245	140	180	206	M12	12	80	70	46	5	2,5	160	17	2	12	35	18,3	3,0
	100	10500	145	355	3000	290	140	210	258	M16	12	90	80	52,6	5	2,5	180	18,6	3	15	37	28	5,0
	100M	16000	140	340	2400	290	170	210	258	M16	12	90	80	63	5	2,5	200	13,5	2	12	35	30	5,0
	130	15750	135	330	2400	322	170	240	278	M16	12	90	80	52,6	5	3,0	210	18,6	3	15	37	35	6,0

NOTES

1) $T_{max} = 2 \times T_{KN}$
» Refer to Selection page 7 to 11

2) This maximum allowable torque transmission speed n_{max} must not be exceeded when transmitting torque

3) This minimum allowable overrunning speed n_{imin} should not be reduced under continuous operation. Possible reduction of this minimum speed on request

4) Inner race overruns
Keyway to DIN 6885.1

5) Tolerance +1

Cover F8 must be ordered separately
» Refer to mounting and maintenance instructions page 12 to 13

Other bore diameters on request

MOUNTING EXAMPLE

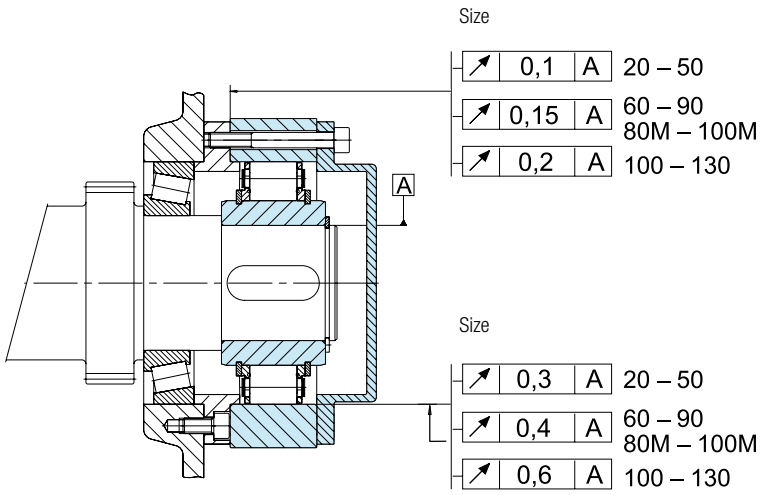

RSCI 180-300

TYPE

Type RSCI is a centrifugal lift off sprag type freewheel with the inner race rotating. Only the inner race is designed for freewheeling.

Primarily designed as a backstop, this type can be also used as an overrunning clutch in crawl drives, where the overrunning speed is high but the driving speed is low and does not exceed the maximum driving speed shown in the table. Centering of the outer race must use the inner bore. The centering spigot must not contact the sprag cage. Please refer to page 74 (RSCI 20-130) for further information.

RSCI 180-300

RSCI

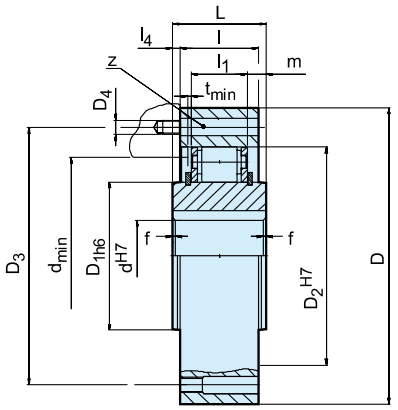

Type	Size	Torque	Speeds								Number									Weight
	d^{H7} [mm]	T_{KN} 1) [Nm]	n_{max} 2) [min⁻¹]	n_{imin} 3) [min⁻¹]	n_{imax} 4) [min⁻¹]	D 5) [mm]	D_{1h6} [mm]	D_2^{H7} [mm]	D_3 [mm]	D_4	z	L [mm]	l [mm]	l_1 [mm]	l_4 [mm]	f × 45° [mm]	d_{min} [mm]	m [mm]	t_{min} [mm]	[kg]
RSCI	180	31500	115	285	1300	412	240	310	360	M20	12	90	80	53	5	3,5	280	18,6	3	59
	180 M	50000	90	220	1300	422	240	310	370	M20	18	120	120	83	0	4	280	18,5	2	92
	180 II	63000	115	285	1300	412	240	310	360	M20	24	160	160	118	0	3,5	280	22	3	116
	180 II-M	100000	90	220	1300	425	240	310	370	M24	24	240	240	176	0	4	280	31	3	190
	220	42500	110	265	1100	470	290	360	410	M20	16	105	80	60	12,5	4	330	19,5	3	90
	220 M	68000	85	205	1100	480	290	360	410	M24	16	120	120	83	0	4	330	18,5	2	109
	220 II	85000	110	265	1100	480	290	360	430	M24	18	160	160	130	0	4	330	15	3	159
	220 II-M	136000	85	205	1100	490	290	360	425	M30	20	240	240	176	0	4	330	32	2	249
	240	52000	105	250	1100	500	320	390	440	M20	16	105	90	60	7.5	4	360	15	2	95
	240 M	83000	80	195	1100	520	320	390	440	M24	16	120	120	83	0	4	360	18,5	2	137
	240 II	104000	105	250	1100	520	320	390	440	M24	24	180	180	132	0	4	360	24	2	191
	240 II-M	166000	80	195	1100	530	320	390	455	M30	24	240	240	181	0	4	360	32	2	250
	260	65000	100	240	1000	550	360	430	500	M24	16	105	105	60	0	4	400	22,5	2	130
	260 M	100000	75	185	1000	580	360	430	500	M24	24	125	125	83	0	4	400	21	2	183
	260 II	130000	100	240	1000	580	360	430	500	M24	24	210	210	132	0	4	400	39	2	262
	260 II-M	200000	75	185	1000	580	360	430	500	M30	24	250	250	176	0	4	400	37	2	369
	300	78000	90	225	1000	630	410	480	560	M24	24	105	105	60	0	4	460	22,5	3	174
	300 M	125000	70	175	1000	630	410	480	560	M24	24	125	125	83	0	4	460	21	3	210
	300 II	156000	90	225	1000	630	410	480	560	M24	24	210	210	134	0	4	460	38	3	351
	300 II-M	250000	70	175	1000	630	410	480	560	M30	24	250	250	182,6	0	4	460	33,7	3	457

NOTES

1) $T_{max} = 2 \times T_{KN}$
» Refer to Selection page 7 to 11

2) This maximum allowable torque transmission speed n_{max} must not be exceeded when transmitting torque

3) This minimum allowable overrunning speed n_{imin} should not be reduced under continuous operation. Possible reduction of this minimum speed on request

4) Inner race overruns
Keyway to DIN 6885.1

5) Tolerance +1

Cover F8 must be ordered seperately
» Refer to mounting and maintenance instructions page 12 to 13

Other bore diameters on request

MOUNTING EXAMPLE

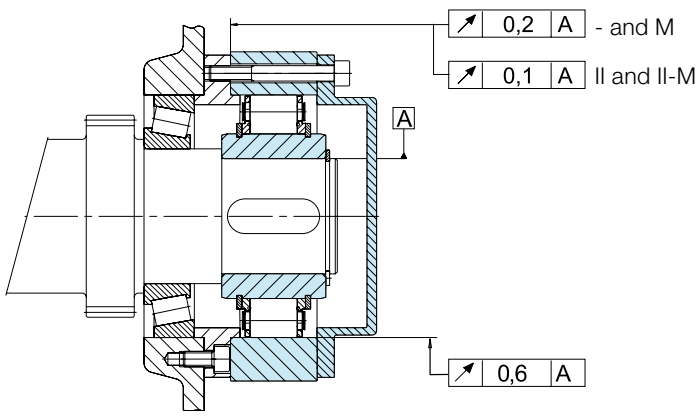

RSXM

TYPE

The series RSXM completes the small to medium backstop range, which commenced with the highly successful RSCI programme. Type RSXM is a centrifugal lift off sprag type freewheel with the inner race rotating. Only the inner race is designed for freewheeling. It is a non self-supported type. Bearings must be provided to ensure concentricity of the inner and outer races and support axial and radial loads, as shown overleaf. Concentricity and run-out limits must be observed.

The RSXM type accepts all types of lubricant currently used in power transmission equipment. It is possible to mount these freewheels directly in gearboxes without seperate lubrication. An oil mist is generally sufficient. Grease lubrication may be acceptable if the unit works mostly in overrunning condition, as on E-motors. When used as a backstop, it must be checked that the overrunning speed will not go below the minimum speed given in the characteristic table.

RSXM

RSXM

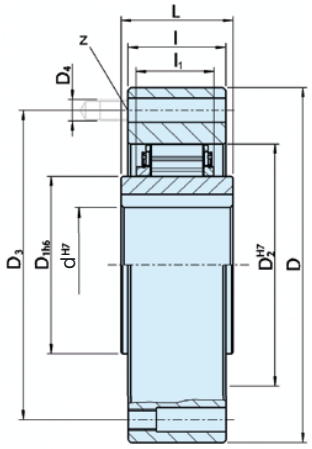

Type	Size	Bore dia.	Torque	Overrunning speeds								Number						Weight
		d^{H7} [mm]	T_{KN} 1) [Nm]	n_{max} 2) [min⁻¹]	n_{min} 3) [min⁻¹]	n_{imax} 4) [min⁻¹]	D 5) [mm]	D_{1h6} [mm]	D_2^{H7} [mm]	D_3 [mm]	D_4 [mm]	z [nb]	L [mm]	l [mm]	l_1 [mm]	t_{min} [mm]	d_{min} [mm]	[kg]
RSXM	31	20*	100	340	820	20000	85	31	55	70	M6	6	24	25	17	1	41	0,75
	38	25*	135	320	770	18500	90	38	62	75	M6	6	24	25	17	1	50	0,95
	46	25,30	425	300	530	13500	95	46	70	82	M6	6	35	35	25	1	53	1,4
	51	30,35	525	220	525	12500	105	51	75	90	M6	6	35	35	25	1	62	1,8
	56	35,40	625	210	500	11500	110	56	80	96	M6	8	35	35	25	1	70	1,8
	61	35,40	420	265	640	14000	120	61	85	105	M8	6	25	27	17	2	73	1,8
	66	35,40,45	850	200	480	10000	132	66	90	115	M8	8	35	35	25	1	78	2,7
	76	40,45,50	1100	190	460	9000	140	76	100	125	M8	8	35	35	25	1	90	3,1
	86	45,50	1450	180	440	8000	150	86	110	132	M8	8	40	40	25	1	100	4,2
	101	45,55,60,70	1950	175	420	6500	175	101	125	155	M10	8	50	50	25	1	117	7,3

NOTES

1) $T_{max} = 2 \times T_{KN}$
   » Refer to Selection page 7 to 11

2) This maximum allowable torque transmission speed n_{max} must not be exceeded when transmitting torque.

3) This minimum allowable overrunning speed n_{imin} should not be rdeuced under continuous operation. Possible reduction of this minimum speed in request.

4) Inner race overruns.
   Keyway to DIN 6885.1
   *Keyway to DIN 6885.3

5) Tolerance +1

» Refer to mounting and maintenance instructions page 12 to 13.

Other bore diameters on request.

MOUNTING EXAMPLE

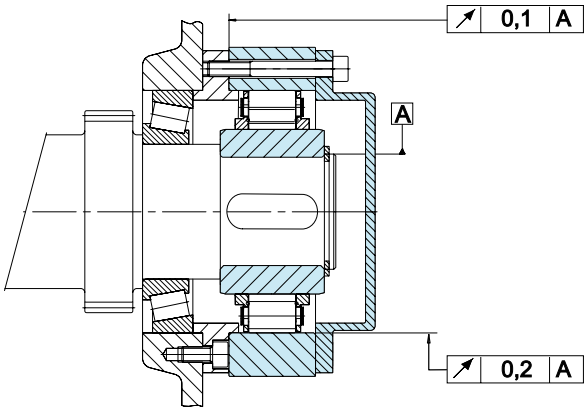

RSRV
RSRT

TYPE

The types RSRV and RSRT are centrifugally lift-off sprag type high speed backstops with integral torque limiter. Please refer to the RSCI design on catalogue pages 74 to 77 for complementary information on Stieber centrifugally lift-off sprag type backstops.

The high quality oil through-impregnated friction linings ensure a consistent and reliable slip torque even when not in operation for a long length of time. The slip torque is factory pre-set to the application requirements.

These assemblies are primarily intended for installation on multiple drives where two or more backstops share the reverse load, such as on large inclined conveyors.

The RSRV is the pure load-sharing version. No maintenance and adjustments are necessary.

In addition, the RSRT can be progressively released under load by a mechanical device. Alternatively we can offer a hydraulic release solution for a fully controlled safe release procedure.

The slip torque should be set 20% higher than the maximum static return torque including overload conditions.

These units are not bearing supported internally. The outer member must be centred on the machine housing.

Concentricity and run-out limits must be observed.

RSRV, RSRT

RSRV

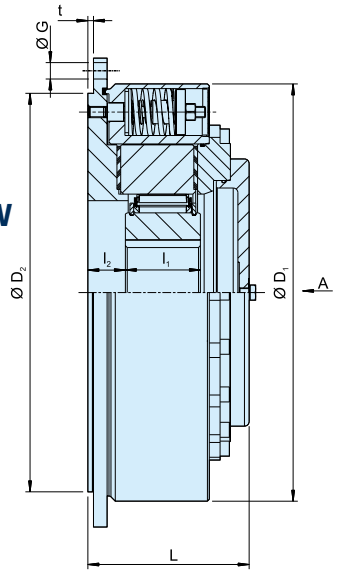

RSRT

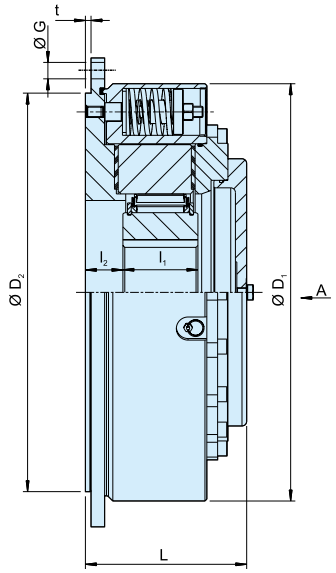

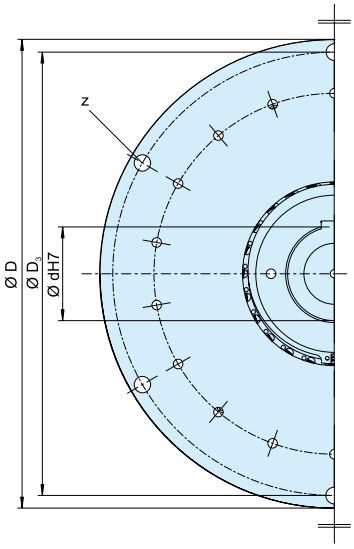

Type	Size										Number					Weight
		d H7 [mm]	T 1) [Nm]	n_{min} 2) [min⁻¹]	n_{max} 3) [min⁻¹]	D	D_1	$D_{2\,h6}$	D_3	t [mm]	z	L	l_1	l_2 4)	G	[kg]
RSRV RSRT	85	50, 60	1400	490	5300	330	286	280	308	6	6	135	60	29	M12	50
	100	60, 70	2300	480	4100	350	308	300	328	6	6	140	60	31	M12	60
	120	70, 80	3400	370	3600	400	345	340	373	6	6	150	70	31	M16	80
	140	65, 90	4500	420	2700	430	375	375	403	6	6	150	70	31	M16	95
	170	90, 100	8000	400	2400	500	445	425	473	6	6	170	80	40	M16	150
	200	130, 150	12500	370	2400	555	500	495	528	6	6	170	80	40	M16	180
	240	150, 180	21 500	310	1300	710	630	630	670	8	12	185	90	50	M20	350
	260	150, 190	30 000	275	1000	750	670	670	710	8	12	205	105	50	M20	420

NOTES

1) Maximal slipping torque.
A lower slipping torque can be set.

2) This minimum allowable overrunning speed n_{min} should not be reduced under continuous operation. Possible reduction of this minimum speed on request.

3) Maximal speed, inner race overruns
Keyway to DIN 6885.1

4) Tolerance +2

When ordering, please specify direction of rotating seen from arrow »A«.
»R« Inner race overruns in clockwise direction.
»L« Inner race overruns in counterclockwise direction.

» Refer to mounting and maintenance instructions pages 12 to 13

MOUNTING EXAMPLE

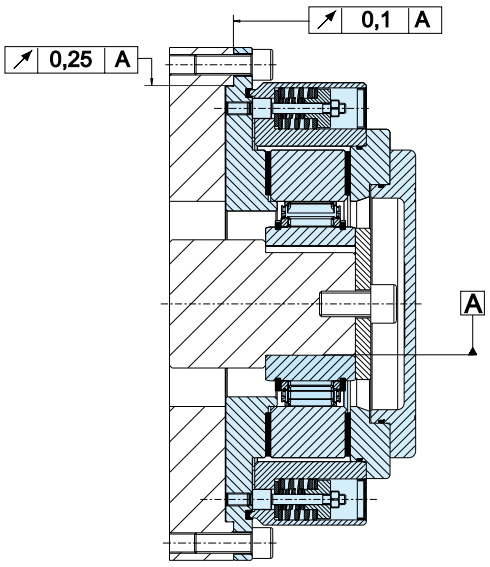

RDBK
RDBK-H

TYPE

The type RDBK is a centrifugally lift-off sprag RSCI high speed backstop (Please refer to pages 74 to 77) equipped with integral torque limiter. The latter limits the backstop transmissible torque to a value that is factory set-up according to customer request.

This design will be used mostly as backstop in multi-drive systems, such as on large inclined conveyors, where two or more backstops share the reverse load.

The torque limiting function is performed through a multi-disc brake working in oil. This solution provides not only for a high torque density of the complete unit, but also insures that the set slip torque remains constant over the working life time regardless of the environmental conditions.

The RDBK sub-assembly which rotate backwards under overload is fully bearing supported. The unit is capable of performing as many reverse rotations as may be required (within the limits of energy dissipation) to completely unload the conveyor prior to maintenance work being carried out. Within some time intervals this type can rotate regularly backwards damage free.

The option of a release function manually actuated is also available. A hydraulic solution is the preferred one, nevertheless a full mechanical one can be supplied. The release is performed using a simple hand pump to actuate the internal hydraulic cylinder; progressively releasing the backstop.

The backstop function is of the built-in design. The outer part must be centered and fixed on the machine housing. The run-out and squareness tolerances must be respected.

RDBK, RDBK-H

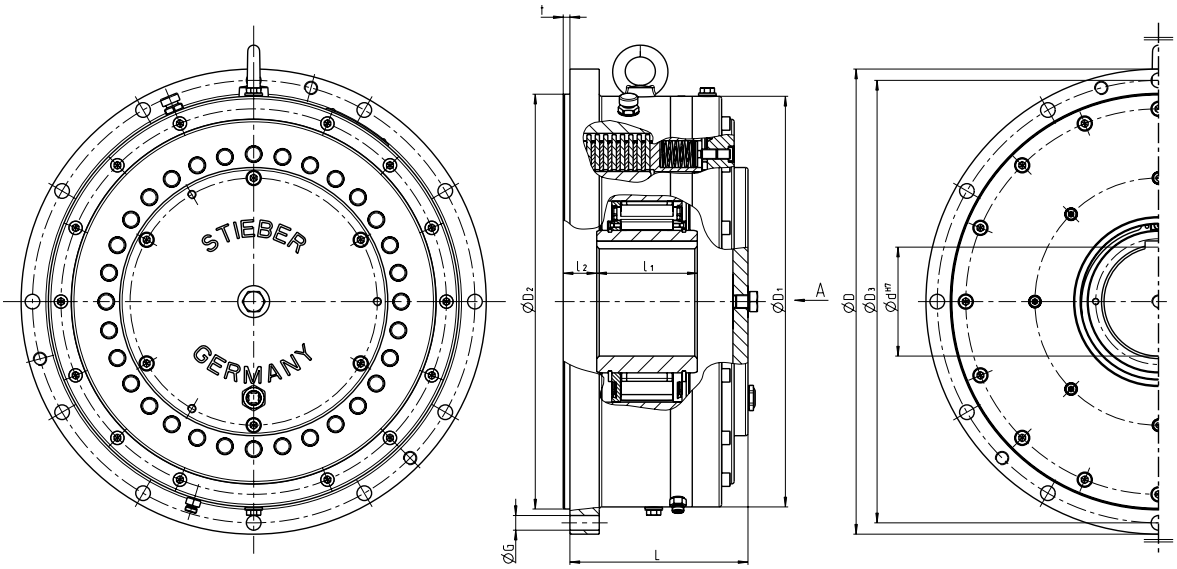

Type	Size														Number		Weight
		d^{H7}_{max} [mm]	T[1)] [Nm]	n_{min}[2)] [min⁻¹]	n_{max}[3)] [min⁻¹]	n_{rmax}[4)] [min⁻¹]	D [mm]	D_1 [mm]	D_{2g7} [mm]	D_3 [mm]	t [mm]	L [mm]	l_1 [mm]	l_2[5)] [mm]	Z	G [mm]	[kg]
RDBK RDBK..H	125-63	60	5500	360	6000	270	330	285	280	308	6	158	90	29	6	M12	65
	180-58	100	12500	290	3000	220	430	375	375	403	6	170	80	31	6	M12	115
	210-63	130	19000	270	2400	205	500	438	425	473	6	190	90	40	6	M16	170
	240-83	130	30000	260	2400	195	555	490	495	528	8	215	120	40	12	M16	250
	280-83	150	40000	235	2000	175	660	580	580	620	8	230	120	40	12	M20	380
	280-96	150	50000	220	2000	165	660	580	580	620	8	230	120	40	12	M20	380
	310-83	180	60000	220	1300	165	710	630	630	670	8	235	120	50	12	M20	450
	310-96	180	70000	210	1300	160	710	630	630	670	8	235	120	50	12	M20	450
	360-83	230	82000	200	1100	150	780	700	700	740	8	245	120	50	16	M20	570
	360-96	230	102000	190	1100	145	780	700	700	740	8	245	120	50	16	M20	570
	460-96	300	180000	170	1000	130	975	870	850	925	10	275	120	63	16	M30	950

NOTES

1) Maximal slipping torque.
A lower slipping torque can be set.

2) This minimum allowable overrunning speed n_{min} should not be reduced under continuous operation. Possible reduction of this minimum speed on request.

3) Maximal speed, inner race overruns
Keyway to DIN 6885.1

4) Maximum speed rolling backwards, internal brake open

5) Tolerance +2

When ordering, please specify direction of rotating seen from arrow »A«.
»R« Inner race overruns in clockwise direction.
»L« Inner race overruns in counterclockwise direction.

» Refer to mounting and maintenance instructions pages 12 to 13

MOUNTING EXAMPLE

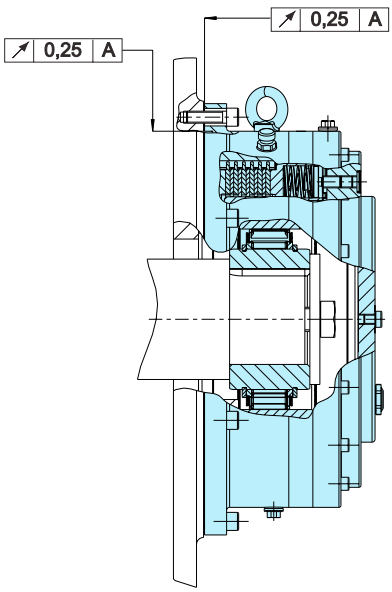

RIZ
RINZ

TYPE

Types RIZ, RINZ are centrifugal lift off sprag type freewheels with the inner race rotating. Suitable for backstop, or overrunning clutch applications. Only the inner race is designed for freewheeling.

These units are part of the Stieber modular system. They are bearing supported using series 60.. bearings, grease lubricated and fitted with ZZ seals. Units are delivered as standard lubricated with grease and ready to install in either a horizontal or vertical position. Types RIZ, RINZ are designed to be used with G series covers. The following pages give further important information for use of this type unit.

If the unit is to be installed inside a housing where oil lubrication is available, please specify type RIW, RIWN. The F series covers from type GFR, GFRN are then used without shaft seals.

RIZ, RINZ

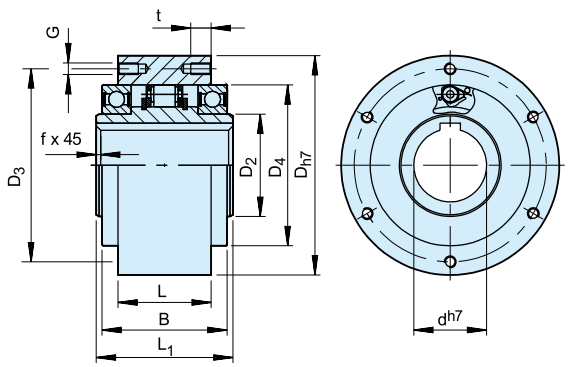

RIZ

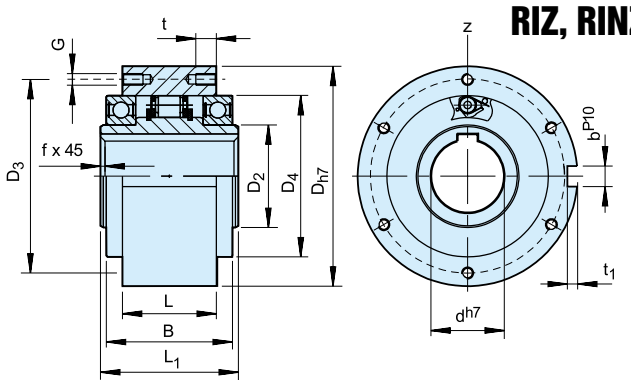

RINZ

Type	Size		Speeds								Number								Weight
	d^{H7} [mm]	T_{KN} 1) [Nm]	n_{max} 2) [min⁻¹]	n_{imin} 3) [min⁻¹]	n_{imax} 4) [min⁻¹]	D_{h7} [mm]	D_2 [mm]	D_4 [mm]	D_3 [mm]	G	z	L_1 [mm]	L [mm]	B [mm]	t [mm]	f [mm]	t_1 [mm]	b^{P10} [mm]	[kg]
RIZ RINZ	30	375	290	700	9000	100	45	75	87	M6	6	68	43	60	10	1,0	4	8	2,3
	35	550	280	670	8500	110	50	80	96	M6	6	74	45	63	12	1,0	5	10	3,2
	40	800	260	630	7500	125	55	90	108	M8	6	86	53	73	14	1,5	5	12	4,8
	45	912	255	610	6700	130	60	95	112	M8	8	86	53	73	14	1,5	5,5	14	5,0
	50	1400	235	560	6000	150	70	110	132	M8	8	94	64	86	14	1,5	5,5	14	7,5
	60	2350	210	510	5300	170	80	125	150	M10	10	114	78	105	16	2,0	7	18	12,7
	70	3050	195	470	4000	190	90	140	165	M10	10	134	95	124	16	2,5	7,5	20	14,5
	80	5800	155	375	4000	210	105	160	185	M10	10	144	100	124	16	2,5	9	22	19,0
	90	8700	145	350	3000	230	120	180	206	M12	10	158	115	143	20	3,0	9	25	29,5
	100	16000	140	340	2400	270	140	210	240	M16	10	182	120	153	24	3,0	10	28	42,5
	130	23000	130	320	2400	310	160	240	278	M16	12	212	152	194	24	3,0	11	32	70

NOTES

1) $T_{max} = 2 \times T_{KN}$
» Refer to Selection page 7 to 11

2) This maximum allowable torque transmission speed n_{max} must not be exceeded when transmitting torque

3) This minimum allowable overrunning speed n_{imin} should not be reduced under continuous operation. Possible reduction of this minimum speed on request

4) Inner race overruns
Keyway to DIN 6885.1

» Refer to mounting and maintenance instructions page 12 to 13

MOUNTING EXAMPLE

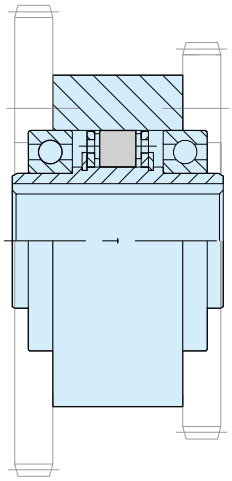

RIZ..G1G2, RIZ..G2G7 RINZ..G5G5

Back of
RIZ..G1G2

TYPE

Types RIZ..G1G2/G7G2, RINZ..G5G5 are centrifugal lift off sprag type freewheels with the inner race rotating. Only the inner race is designed for freewheeling.

These are self-contained units designed for overrunning clutch applications. Typically used in crawl drives, where the overrunning speed is high but the drive speed is low and does not exceed the maximum driving speed specified in the table. They are type RIZ, RINZ (see page 84 for more information) equipped with G type covers featuring a grease pocket and contact free seal. When ordered complete, the unit is delivered grease lubricated, ready for either horizontal or vertical installation.

RIZ..G1G2, RIZ..G2G7, RINZ..G5G5

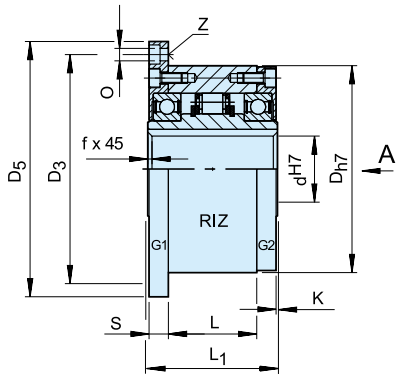

RIZ...G1G2

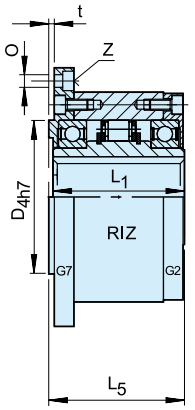

RIZ...G2G7

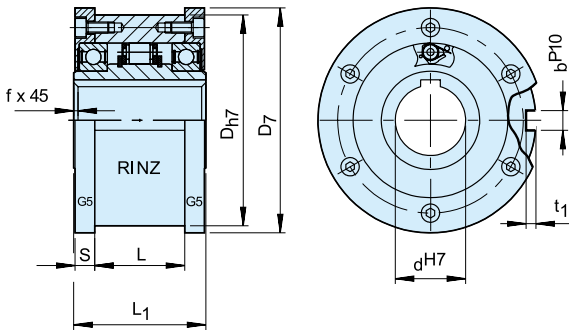

RINZ...G5G5

Type	Size		Speeds									Number									Weight
	d^{H7} [mm]	T_{KN} 1) [Nm]	n_{max} 2) [min⁻¹]	n_{imin} 3) [min⁻¹]	n_{imax} 4) [min⁻¹]	D_{h7} [mm]	D_3 [mm]	D_4 [mm]	D_5 [mm]	D_7 [mm]	O	z	S [mm]	L_1 [mm]	L [mm]	L_5 [mm]	t [mm]	t_1 [mm]	b^{P10} [mm]	f [mm]	G1 [kg]
RIZ RINZ	30	375	290	700	9000	100	114	75	128	109	6,6	6	11,5	68	43	70	3	4	8	1,0	3,9
	35	550	280	670	8500	110	124	80	140	119	6,6	6	13,5	74	45	76	3,5	5	10	1,0	4,9
	40	800	260	630	7500	125	142	90	160	135	9	6	15,5	86	53	88	3,5	5	12	1,5	7,5
	45	912	255	610	6700	130	146	95	165	140	9	8	15,5	86	53	88	3,5	5,5	14	1,5	7,8
	50	1400	235	560	6000	150	166	110	185	160	9	8	14	94	64	96	4	5,5	14	1,5	10,8
	60	2350	210	510	5300	170	192	125	214	182	11	10	17	114	78	116	4	7	18	2,0	16,8
	70	3050	195	470	4000	190	212	140	234	202	11	10	18,5	134	95	136	4	7,5	20	2,5	20,8
	80	5800	155	375	4000	210	232	160	254	222	11	10	21	144	100	146	4	9	22	2,5	27
	90	8700	145	350	3000	230	254	180	278	242	14	10	20,5	158	115	160	4,5	9	25	3,0	40
	100	16000	140	340	2400	270	305	210	335	282	18	10	30	182	120	184	5	10	28	3,0	67
	130	23000	130	320	2400	310	345	240	380	322	18	12	29	212	152	214	5	11	32	3,0	94

NOTES

1) $T_{max} = 2 \times T_{KN}$
» Refer to Selection page 7 to 11

2) This maximum allowable torque transmission speed n_{max} must not be exceeded when transmitting torque

3) This minimum allowable overrunning speed n_{imin} should not be reduced under continuous operation. Possible reduction of this minimum speed on request

4) Inner race overruns
Keyway to DIN 6885.1

When ordering, please specify direction of rotation seen from arrow „A“: „R“ Inner race overruns in clockwise direction, „L“ Inner race overruns in counterclockwise direction

» Refer to mounting and maintenance instructions page 12 to 13

MOUNTING EXAMPLE

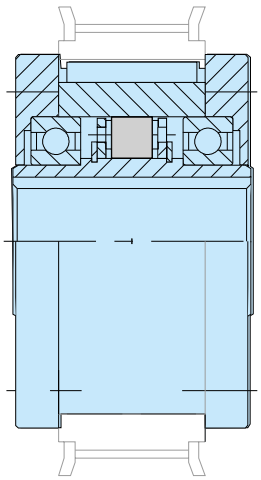

RIZ..G2G3
RIZ..G3G4

TYPE

Types RIZ..G2G3/G3G4 are centrifugal lift off sprag type freewheels with the inner race rotating. Only the inner race is designed for freewheeling.

They are self-contained units designed for backstop applications. The overrunning speed must not be less than the minimum specified in the table. This must be considered if using a variable speed drive. The torque bolt must be fitted into a slot on a fixed part of the machine. The radial clearance should be 1–3 % of the bolt diameter. The torque arm and bearings must not be axially loaded.

They are a type RIZ, (see page 84) equipped with G type covers featuring grease pockets and contact free seals. When ordered complete, the unit is delivered grease lubricated, ready for either horizontal or vertical installation.

RIZ..G2G3, RIZ..G3G4

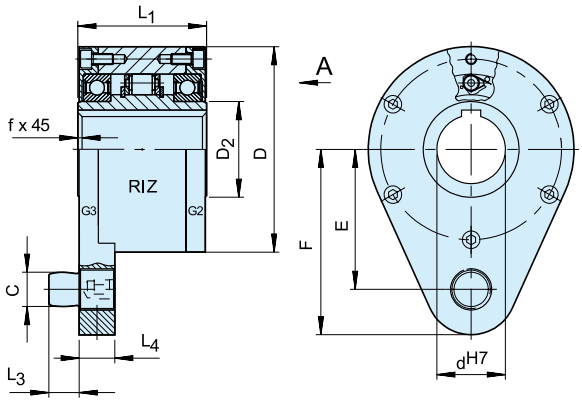

RIZ...G2G3

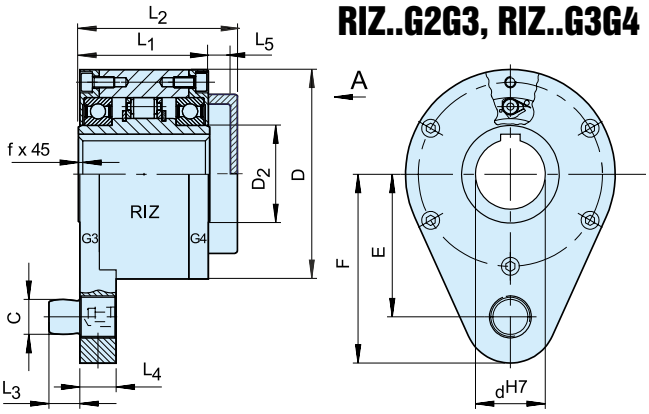

RIZ...G3G4

Type	Size		Speeds													Weight
	d^{H7} [mm]	T_{KN} 1) [Nm]	n_{imin} 2) [min⁻¹]	n_{imax} 3) [min⁻¹]	D [mm]	D_2 [mm]	C [mm]	L_1 [mm]	L_2 [mm]	L_3 [mm]	L_4 [mm]	F [mm]	E [mm]	L_5 [mm]	f [mm]	[kg]
RIZ..G2G3 RIZ..G3G4	30	375	700	9000	100	45	16	68	88	14	18	92	68	15	1,0	4,5
	35	550	670	8500	110	50	20	74	96	18	25	102	76	17	1,0	5,6
	40	800	630	7500	125	55	20	86	109	18	25	112	85	18	1,5	8,5
	45	912	610	6700	130	60	25	86	109	22	25	120	90	18	1,5	8,9
	50	1400	560	6000	150	70	25	94	116	22	25	135	102	18	1,5	12,8
	60	2350	510	5300	170	80	32	114	139	25	30	145	112	20	2,0	19,3
	70	3050	470	4000	190	90	38	134	168	30	35	175	135	26	2,5	23,5
	80	5800	375	4000	210	105	38	144	178	30	35	185	145	26	2,5	32
	90	8700	350	3000	230	120	50	158	192	40	45	205	155	26	3,0	47,2
	100	16000	340	2400	270	140	50	182	217	40	45	230	180	26	3,0	76
	130	23000	320	2400	310	160	68	212	250	55	60	268	205	28	3,0	110

NOTES

1) $T_{max} = 2 \times T_{KN}$
» Refer to Selection page 7 to 11

2) This minimum allowable overrunning speed n_{imi} should not be reduced under continuous operation. Possible reduction of this minimum speed on request.

3) Inner race overruns
Keyway to DIN 6885.1

When ordering, please specify direction of rotation seen from arrow „A“: „R“ Inner race overruns in clockwise direction, „L“ Inner race overruns in counterclockwise direction

» Refer to mounting and maintenance instructions page 12 to 13

MOUNTING EXAMPLE

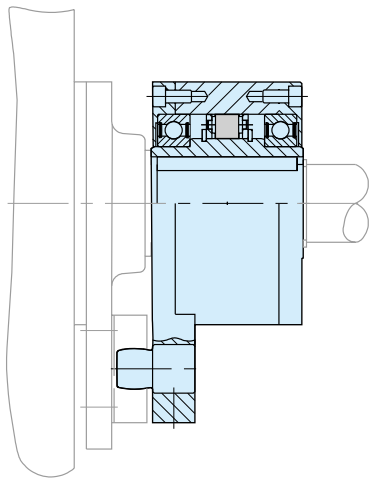

RIZ..ESG2

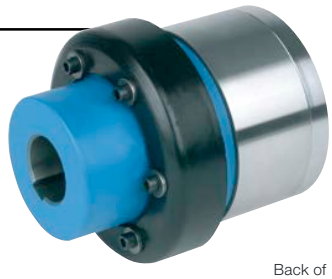

Back of
RIZ..ESG2

TYPE

Type RIZ..ESG2 is a centrifugal lift off sprag type freewheel when the inner race is overrunning. Only this race is designed for freewheeling.

It is a self-contained unit designed for overrunning clutch applications. Typically used in crawl drives where the overrunning speed is high, but the drive speed is low and does not exceed the maximum driving speed specified in the table.

It is a type RIZ (see page 84 for further information) equipped with an ES elastic coupling and a cover G2. The ES type is a rugged coupling, economical and suitable for many applications.

The inner race must overrun and will be connected to the driven machine shaft. When ordered complete, the unit is delivered grease lubricated, ready for either horizontal or vertical installation.

RIZ..ESG2

RIZ..ESG2

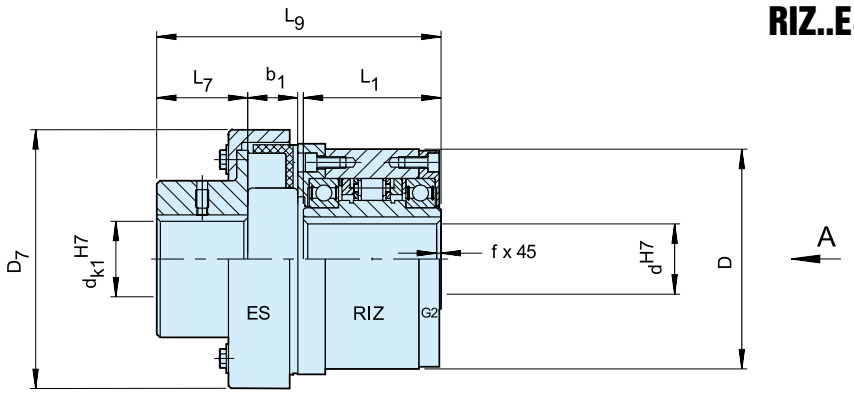

Coupling half: keyway tolerance P9

Type	Type			Speeds										Weight
	d^{H7} [mm]	ES	T_{KN} [Nm]	n_{max} 1) [min⁻¹]	n_{min} 2) [min⁻¹]	n_{max} 3) [min⁻¹]	d_{K1}^{H7} [mm]	D [mm]	L_1 [mm]	D_7 [mm]	L_7 [mm]	L_9 [mm]	b_1 [mm]	[kg]
RIZ..ESG2	30	10	80	290	700	9000	10.. 45	100	68	117	48	133,5	17	5,0
	35	16	250	280	670	8500	10.. 50	110	74	129	52	143,5	19	6,6
	40	25	400	260	630	7500	15.. 55	125	86	134	57	163,5	22	9,9
	45	40	625	255	610	6700	20.. 60	130	86	155	61	171,5	26	11,3
	50	63	1000	235	560	6000	20.. 70	150	94	175	67	194	30	16,7
	60	100	1600	210	510	5300	25.. 75	170	114	196	75	227	35	24,0
	70	160	2500	195	470	4000	30.. 80	190	134	223	82	261,5	41	32,5
	80	400	5000	155	375	4000	45.. 100	210	144	290	97	305	56	52
	90	630	7500	145	350	3000	60.. 120	230	158	330	116	346,5	64	78
	100	1000	12500	140	340	2400	75.. 140	270	182	378	140	386	75	136
	130	1600	20000	130	320	2400	90.. 160	310	212	432	160	442	85	199

NOTES

1) This maximum allowable torque transmission speed n_{max} must not be exceeded when transmitting torque

2) Inner race
This minimum allowable overrunning speed n_{min} should not be reduced under continuous operation. Possible reduction of this minimum speed on request

3) Inner race
Keyway to DIN 6885.11

When ordering, please specify d_k bore diameter and direction of rotation seen from arrow „A“:„R“ Inner race overruns in clockwise direction, „L“ Inner race overruns in counterclockwise direction

» Refer to mounting and maintenance instructions page 12 to 13

MOUNTING EXAMPLE

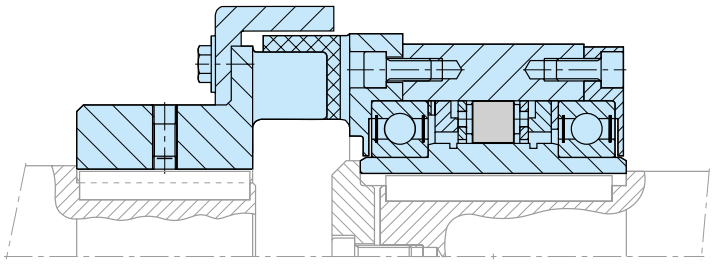

Centrifugally Lift Off Sprags Freewheels

RIZ..ELG2

Back of
RIZ..ELG2

TYPE

Type RIZ..ELG2 is a centrifugal lift off sprag type freewheel when the inner race is overrunning. Only this race is designed for freewheeling. It is a self-contained unit designed for overrunning clutch applications.

Typically used in crawl drives where the overrunning speed is high, but the drive speed is low and does not exceed the maximum driving speed specified in the table. It is a type RIZ (see page 84 for further information) equipped with an EL elastic coupling and a cover G2.

The EL type is a high performance coupling used to damp torsional vibrations and to accept misalignment without excess bearing load.

The inner race must overrun and will be connected to the driven machine shaft. When ordered complete, the unit is delivered grease lubricated, ready for either horizontal or vertical installation. The torques given in the table are determined by the freewheel capacity.

RIZ..ELG2

RIZ..ELG2

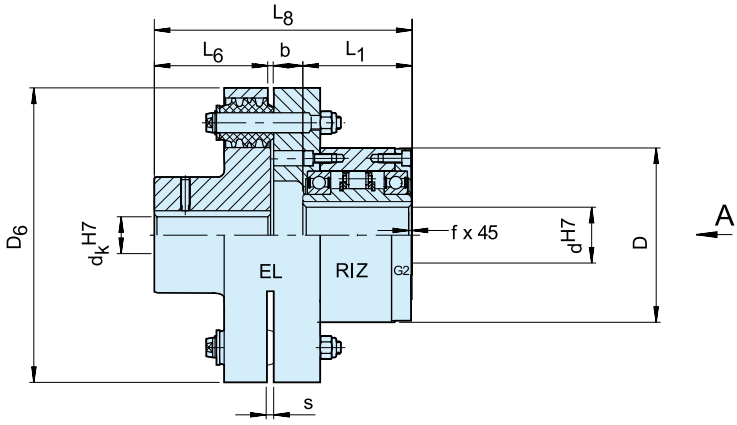

Type	Size			Speeds												Weight
	d^{H7} [mm]	EL	T_{KN} [Nm]	n_{max} 1) [min⁻¹]	n_{min} 2) [min⁻¹]	n_{max} 3) [min⁻¹]	d_K^{H7} [mm]	D [mm]	L_1 [mm]	D_6 [mm]	L_6 [mm]	L_8 [mm]	b [mm]	s [mm]	f [mm]	[kg]
RIZ..ELG2	30	5	375	290	700	9000	20...55	100	68	160	60	147,5	19,5	2	1	11
	35	6	550	280	670	8500	25...75	110	74	190	75	166,5	17,5	2	1	17
	40	6	800	260	630	7500	25...75	125	86	190	75	176,5	15,5	2	1,5	19
	45	6	912	255	610	6700	25...75	130	86	190	75	176,5	15,5	2	1,5	19
	50	7	1400	235	560	6000	30...85	150	94	225	90	208,5	24,5	2,5	1,5	31
	60	8	2350	210	510	5300	35...100	170	114	270	100	244	30	3	2	49
	70	10	3050	195	470	4000	45...120	190	134	340	140	312,5	38,5	3	2,5	90
	80	11	5800	155	375	4000	55...145	210	144	380	160	340	36	3	2,5	107
	90	12	8700	145	350	3000	65...165	230	158	440	180	388	50	3,5	3	170
	100	14	16000	140	340	2400	75...170	270	182	500	200	422,5	40,5	3,5	3	230
	130	16	23000	130	320	2400	85...180	310	212	560	220	482	50	4	3	330

NOTES

1) This maximum allowable torque transmission speed n_{max} must not be exceeded when transmitting torque

2) This minimum allowable overrunning speed n_{min} should not be reduced under continuous operation. Possible reduction of this minimum speed on request

3) Inner race overruns
Keyway to DIN 6885.1

When ordering, please specify d_k bore diameter and direction of rotation seen from arrow „A“:„R“ Inner race overruns in clockwise direction, „L“ Inner race overruns in counterclockwise direction

» Refer to mounting and maintenance instructions page 12 to 13

MOUNTING EXAMPLE

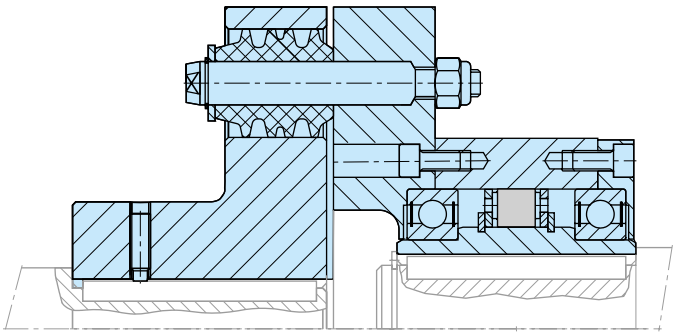

Special Designs

Anything is Possible

Stainless steel indexing clutch
for use in the food processing industry

Self-contained freewheels CSK..P
and roller chain sprocket assembly

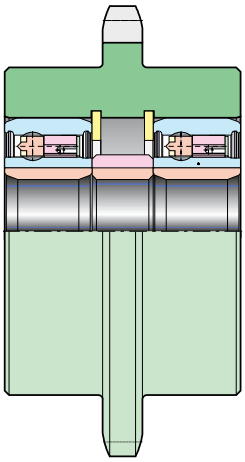

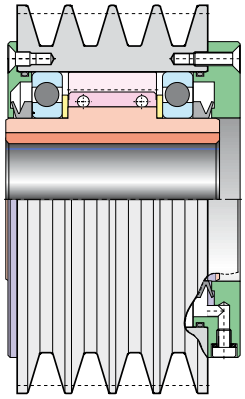

Self-contained freewheel
and v-belt pulley assembly

High performance indexing clutch
for use on an offset printing machine

Indexing clutch and
backstop combination for
high voltage switch-gear

Overrunning clutch for two directions
of rotation, automatic change of direction

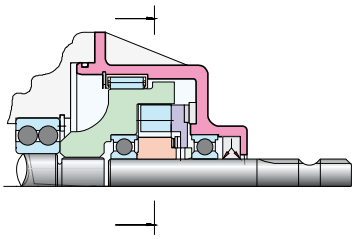

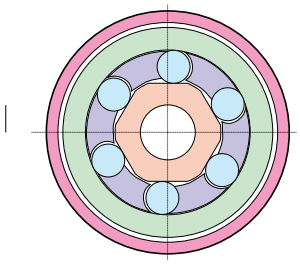

Notes

Notes

Quality from A to Z

A

AA 28
AE 26
AL/ALP. 50
AL..F2D2/F4D2 52
AL..G 66
AL..KEED2 58
AL..KMSD2. 56
ALP../ALMP..F7D7 . .54
AS (NSS) 22
ASK 18
ASNU (NFS) 24
AV 42

B

BC MA 70

C

CEUS 68
CSK/CSK..P . . . 14-16
CSK..2RS 14
CSK..P-2RS 16

D

DC 34
DC-Races 36

F

FS/FSO/HPI 64
FSO/FSO-GR/HPI. .62

G

GFK 20
GFR/GFRN. 44
GFR..F1F2 46
GFR..F2F3 48
GFR..F2F7 46
GFR..F3F4 48
GFRN..F5F6 46

N

NF 30
NFR 38

R

RINZ..G5G5 86
RIZ/RINZ 84
RIZ..ELG2 92
RIZ..ESG2. 90
RIZ..G1G2/..G2G7 . .86
RIZ..G2G2/..G3G4. .88
RDBK. 82
RSBW 40
RDBR-E 72
RSCI 20-130. 74
RSCI 180–300 76
RSRV 80
RSRT 80
RSXM. 78

S

S200 32
SMZ 60

Combined bearing/freewheel
Built-in freewheels
Self-contained freewheels
Centrifugally lift off sprags

NEW PRODUCT NAMES

The table overleaf gives the status of Stieber designations not listed in the catalogue.

Designation	Status
ALB..M	on request
ALZ	on request
ANG/ANR	superseded through NFR
BAT/BATS	still available
CLA	superseded through RIW, RIZ
CLV	still available
CR	still available
CRA	superseded through RSCI
CRLA	superseded through RIW, RIZ

Designation	Status
BW-cages	superseded through DC.. cages
ETK	still available
KK	superseded through CSK
NFS	superseded through ASNU
NSS	superseded through AS
RIW	still available. See also RIZ
RSBF	still available up to size 70
RSBI	superseded through RSCI

All Customer Service phone numbers shown in bold

Belted Drives and Sheaves

TB Wood's

Belted Drives

Chambersburg, PA - USA
1-888-829-6637 – Press #5

For application assistance:
1-888-829-6637 – Press #7

Couplings

Ameridrives

Mill Spindles, Ameriflex, Ameridisc

Erie, PA - USA
1-814-480-5000

Gear Couplings

San Marcos, TX - USA
1 -800-458-0887

Universal Joints, Drive Shafts, Mill Gear Couplings

Erie, PA - USA
1-920-593-2444

Bibby Turboflex

Disc, Gear, Grid Couplings, Overload Clutches

Dewsbury, England
+44 (0) 1924 460801

Boksburg, South Africa
+27(0) 11 918 4270

Guardian Couplings

Engineered Flywheel Couplings, Engine Housings and Pump Mounts, Flexible Shaft Couplings

Michigan City, IN - USA
1-219-874-5248

Huco

Precision Couplings and Air Motors

Hertford, England
+44 (0) 1992 501900

Chambersburg, PA - USA
1-888-829-6637

Lamiflex Couplings

Flexible Couplings, Bearing Isolators, and Coupling Guards

Cotia, SP - Brasil
+55 (11) 4615-6300

Couplings Cont.

TB Wood's

Elastomeric Couplings

Chambersburg, PA - USA
1-888-829-6637– Press #5

For application assistance:
1-888-829-6637 – Press #7

General Purpose Disc Couplings

San Marcos, TX - USA
1-888-449-9439

Electromagnetic Clutches and Brakes

Inertia Dynamics

Spring Set Brakes; Power On and Wrap Spring Clutch/Brakes

New Hartford, CT - USA
1-800-800-6445

Matrix

Electromagnetic Clutches and Brakes, Pressure Operated Clutches and Brakes

Brechin, Scotland
+44 (0) 1356 602000

New Hartford, CT - USA
1-800-825-6544

Warner Electric

Electromagnetic Clutches and Brakes

New Hartford, CT - USA
1-800-825-6544

For application assistance:
1-800-825-9050

Saint Barthélémy d'Anjou, France
+33 (0)2 41 21 24 24

Precision Electric Coils and Electromagnetic Clutches and Brakes

Columbia City, IN - USA
1-260-244-6183

Engineered Bearing Assemblies

Kilian

Engineered Bearing Assemblies

Syracuse, NY - USA
1-315-432-0700

Gearing

Boston Gear

Enclosed and Open Gearing, Electrical and Mechanical P.T. Components

Charlotte, NC - USA
1-800-825-6544

For application assistance:
1-800-816-5608

Nuttall Gear and Delroyd Worm Gear

Worm Gear and Helical Speed Reducers

Niagara Falls, NY - USA
1-716-298-4100

Heavy Duty Clutches and Brakes

Industrial Clutch

Pneumatic and Oil Immersed Clutches and Brakes

Waukesha, WI - USA
1-262-547-3357

Svendborg Brakes

Industrial Brakes and Brake Systems

Vejstrup, Denmark
+45 63 255 255

Twiflex

Caliper Brakes and Thrusters

Wichita Falls, TX - USA
1-844-723-3483

Twickenham, England
+44 (0) 20 8894 1161

Wichita Clutch

Pneumatic Clutches and Brakes

Wichita Falls, TX - USA
1-800-964-3262

Bedford, England
+44 (0) 1234 350311

Linear Products

Warner Linear

Linear Actuators

New Hartford, CT - USA
1-800-825-6544

For application assistance:
1-800-825-9050

Saint Barthélémy d'Anjou, France
+33 (0)2 41 21 24 24

Overrunning Clutches

Formsprag Clutch

Overrunning Clutches and Holdbacks

Warren, MI - USA
1-800-348-0881– Press #1

For application assistance:
1-800-348-0881 – Press #2

Marland Clutch

Roller Ramp and Sprag Type Overrunning Clutches and Backstops

Warren, MI - USA
1-800-216-3515

Stieber Clutch

Overrunning Clutches and Holdbacks

Heidelberg, Germany
+49 (0) 6221-30470

For information concerning our sales offices in Asia Pacific check our website www.altramotion.com.cn

Stieber Clutch®
Altra Industrial Motion

www.stieber.de

Hatschekstraße 36
69126 Heidelberg - Germany
Phone +49(0)6221.30470
sales@stieber.de

Dieselstraße 14
85748 Garching - Germany
Phone +49(0)89.329010
sales@stieber.de

P-7426-SC-A4 9/17