Appendix B – Claim Chart for U.S. Patent No. 10,561,884 ("the '884 Patent")

* Many of the images contained herein show a disassembled representative Infringing Product in order to depict various elements of the Infringing Product. The disassembled Infringing Product has not been altered, modified, or otherwise changed relative to the as-sold Infringing Product. The serial number of the Infringing Product is M1701BK0024, which is shown in the picture below.

the '884 Patent	Assault Fitness AirRunner ("the Infringing Product")	
30. A manually powered treadmill comprising:	A "manually powered treadmill" is literally the infringing product. The pictured Assault Fitness AirRunner is described in the Assault AirRunner Marketing Brochure, as a "completely manual [treadmill], with no electrical consumption." *See, e.g.*, *AirRunner The Premier Elite Fitness Running Machine* Brochure at p. 2 (2017). *See also, e.g.*, LCF000017 ("The Assault AirRunner completely redefines the manual treadmill…"), LCF000678 (labeling the treadmill as a "Manual Treadmill"), LCF001832 (model described as "AirRunner Manual Treadmill"), LCF001866 (the "Assault	

Appendix B – Claim Chart for U.S. Patent No. 10,561,884 ("the '884 Patent")

the '884 Patent	Assault Fitness AirRunner ("the Infringing Product")	
	AirRunner Warning Label" states "This treadmill is manually operated.").	
a frame having a front end and a rear end positioned opposite the front end;	A "frame having a front end and a rear end positioned opposite the front end" is literally present in the Infringing Product. As shown, the frame [1], which designates an assembly of elements and not a single piece of, for example, metal, has a front end [2] and a rear end [3], where the front end [2] is positioned opposite the rear end [3]. *See also, e.g.*, LCF001762 (identifying part no. 501 as "Main Frame") and LCF002465 (titled "01 – Base Frame (Welded Together).pdf").	

Appendix B – Claim Chart for U.S. Patent No. 10,561,884 ("the '884 Patent")

the '884 Patent	Assault Fitness AirRunner ("the Infringing Product")	
		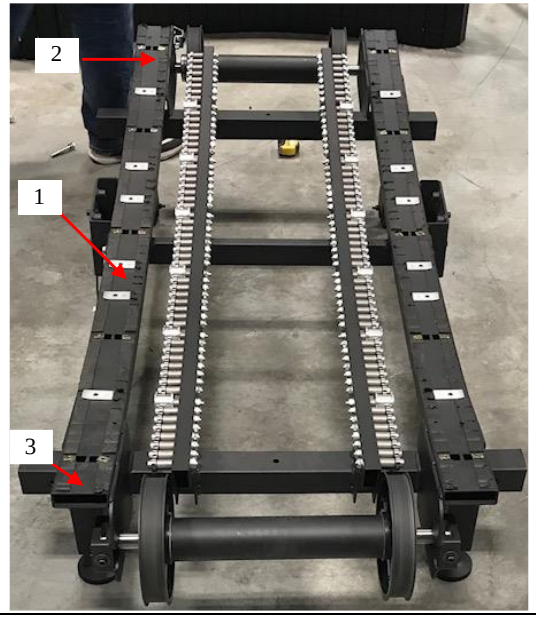

Appendix B – Claim Chart for U.S. Patent No. 10,561,884 ("the '884 Patent")

the '884 Patent	Assault Fitness AirRunner ("the Infringing Product")	
a front shaft coupled to the frame proximate the front end;	A ""Front Shaft" coupled to the frame proximate the front end" is literally present in the Infringing Product. The Court adopted the plain and ordinary meaning of the term "shaft." As shown, a "Front Shaft" [4] is coupled to the frame [1] proximate the front end [2]. As defined in the specification, and construed by the Court, "the term 'coupled' means the joining of two members directly or indirectly to one another … . Such joining may be achieved with the two members or the two members and any additional intermediate members." *See* '884 Patent at col. 32, ll. 22-27; Dkt. 59 at 8, n.1. Thus, coupling of the "Front Shaft" [4] to the frame [1] may be directly or indirectly, such as through an intermediate member (*e.g.*, via support element [16]). *See also, e.g.*, LCF000166 (part nos. 511* "Front Roller," and 511-A "Front Roller Assembly"	

Appendix B – Claim Chart for U.S. Patent No. 10,561,884 ("the '884 Patent")

the '884 Patent	Assault Fitness AirRunner ("the Infringing Product")	
	which correspond to the "Front Shaft" [4]).	
a rear shaft coupled to the frame proximate the rear end;	A "rear shaft coupled to the frame proximate the rear end" is literally present in the Infringing Product. The Court adopted the plain and ordinary meaning of the term "shaft." As shown, a rear shaft [5] is coupled to the frame [1] proximate the rear end [3]. As defined in the specification, and construed by the Court, "the term 'coupled' means the joining of two members directly or indirectly to one another … . Such joining may be achieved with the two members or the two members and any additional intermediate members." *See* '884 Patent at col. 32, ll. 22-27; Dkt. 59 at 8, n.1. Thus, coupling of the rear shaft [5] to the frame [1] may be directly or indirectly, such as through an intermediate member (*e.g.*, via rear support element [17]).	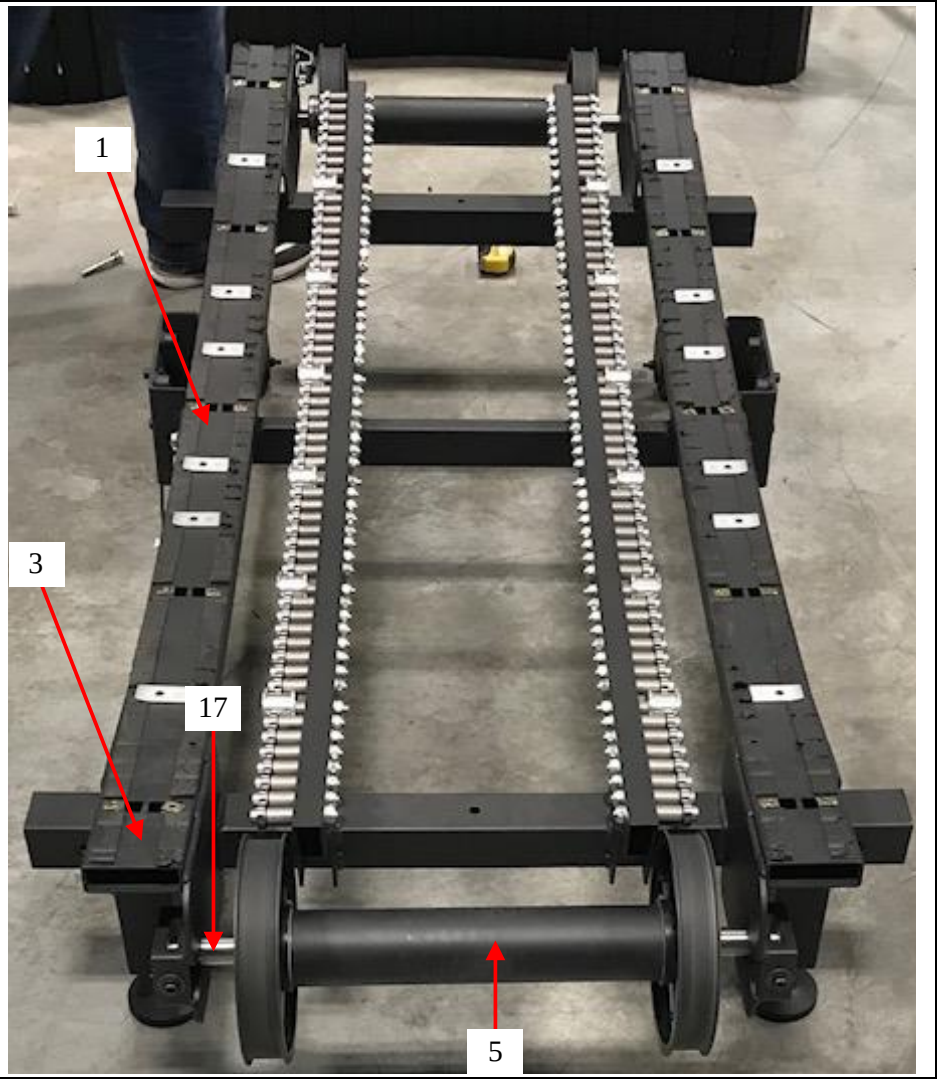

Appendix B – Claim Chart for U.S. Patent No. 10,561,884 ("the '884 Patent")

the '884 Patent	Assault Fitness AirRunner ("the Infringing Product")	
	See also, e.g., LCF000166 (illustrating part no. 512* "Rear Roller," and part no. 512-A "Rear Roller Assembly" which is shown to include a shaft coupled to the frame), and LCF002470 (titled "03c – Rear Roller Assembly.pdf" illustrating two shafts, the shaft and the roller tube i.e., shaft [5] as part of the "Rear Roller Assembly").	

Appendix B – Claim Chart for U.S. Patent No. 10,561,884 ("the '884 Patent")

the '884 Patent	Assault Fitness AirRunner ("the Infringing Product")	
a plurality of bearings coupled to the frame;	A "plurality of bearings coupled to the frame" is literally present in the Infringing Product. As shown, a plurality of bearings [10] is coupled to the frame [1]. As defined in the specification, and construed by the Court, "the term 'coupled' means the joining of two members directly or indirectly to one another. Such joining may be stationary or moveable in nature … . Such joining may be achieved with the two members or the two members and any additional intermediate members." *See* '884 Patent at col. 32, ll. 22-27; Dkt. 59 at 8, n.1. Thus, coupling the plurality of bearings [10] to the frame [1] may be directly or indirectly. Therefore and as shown, the plurality of bearings [10] is coupled to the frame [1] via the bearing rails [8], [9], which are welded to at least one cross-member, which is circled below. *See also, e.g.,* LCF000166 (part nos. 545* "Belt Support Bearing" and 545-A "Belt Support Bearing Assembly"	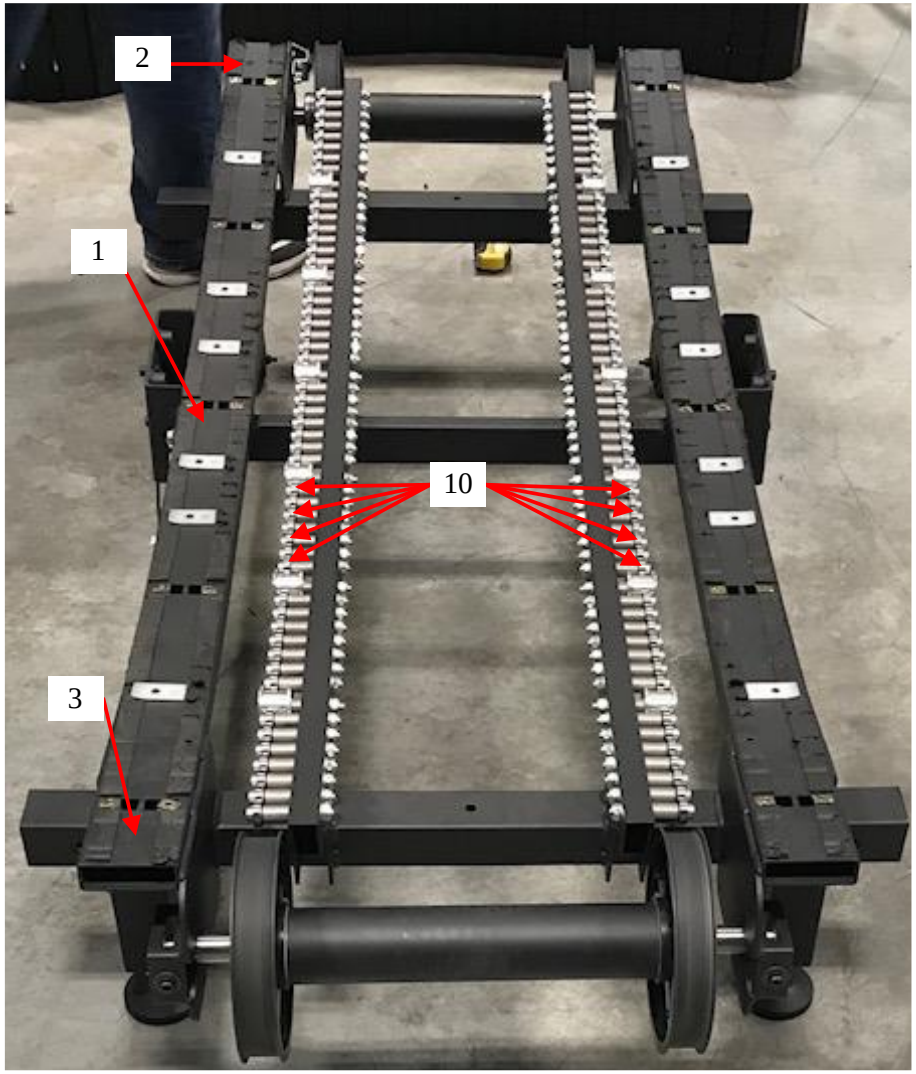

Appendix B – Claim Chart for U.S. Patent No. 10,561,884 ("the '884 Patent")

the '884 Patent	Assault Fitness AirRunner ("the Infringing Product")	
	which correspond to a plurality of bearings [10]), LCF001993 (under "Specifications" "Running Belt Support: 12 Guide Pulleys; 100 Cartridge Bearings"), LCF002133 (under "Components" "Drive System" listed "100 Precision Ball Bearings w/ 12 Roller Guides"), LCF002467 (titled "03 – Base Frame with Bearings – Guide Pulleys – Rollers.pdf" showing a plurality of bearings coupled to the frame).	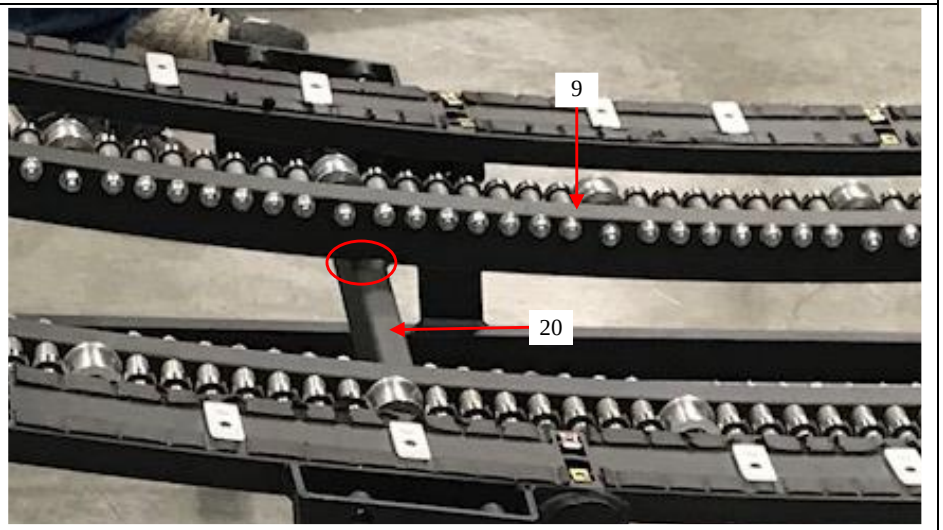 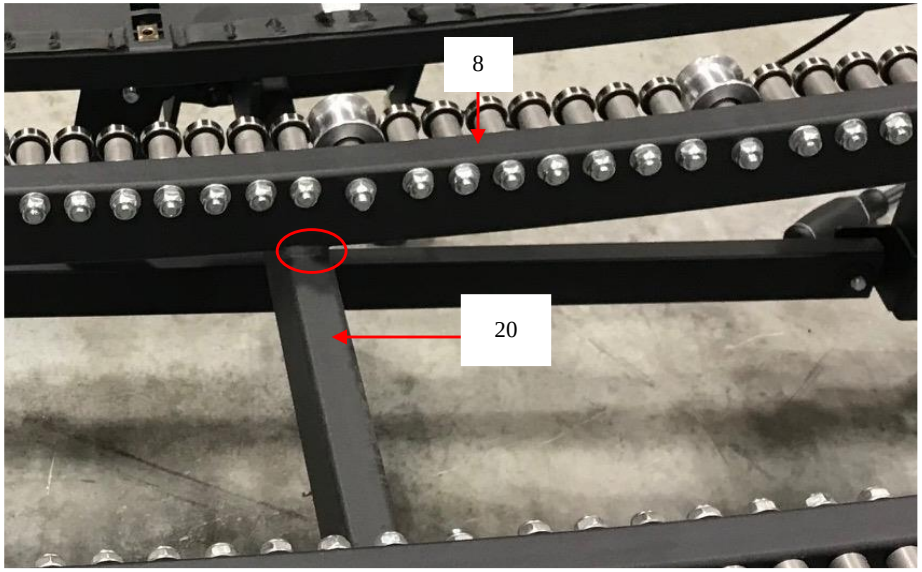

Appendix B – Claim Chart for U.S. Patent No. 10,561,884 ("the '884 Patent")

the '884 Patent	Assault Fitness AirRunner ("the Infringing Product")	
a running belt at least partially supported by the plurality of bearings, wherein the running belt comprises a curved running surface; and	A "running belt at least partially supported by the plurality of bearings" and including a "curved running surface" is literally present in the Infringing Product. As shown, a running belt [11] includes a curved running surface [12]. The running belt [11] is supported by the plurality of bearings [10]. *See also, e.g.,* LCF000013 (describing the treadmill as including "…a slat belt running surface…"), LCF000795 (under "Proposed Product Features" "Slatted belt construction: allows for curved running surface" and under "Frame" "Shall be designed to support a curved running surface,"), LCF000895 (under "Low Impact" "The contoured design…"), and LCF02133 (with "Belt Design" described as "Contoured").	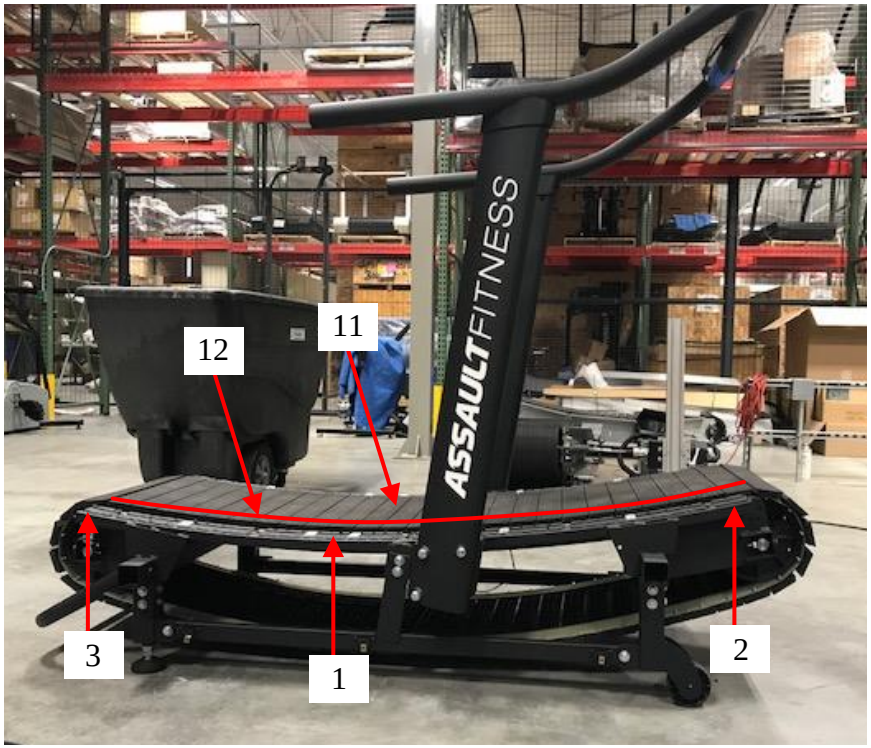 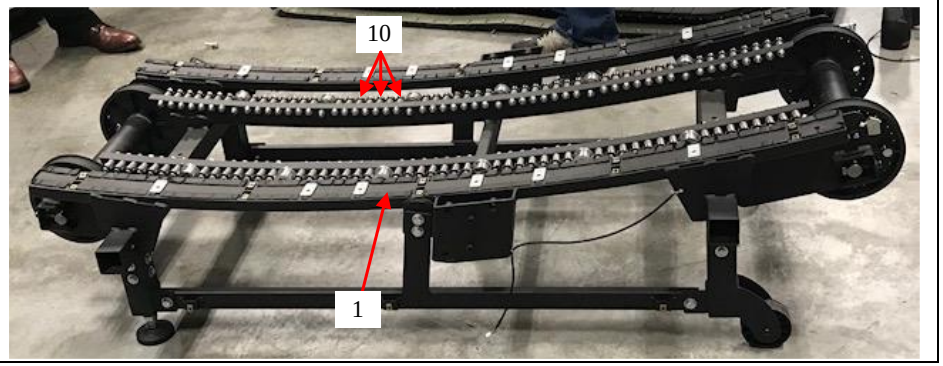

Appendix B – Claim Chart for U.S. Patent No. 10,561,884 ("the '884 Patent")

the '884 Patent	Assault Fitness AirRunner ("the Infringing Product")	
		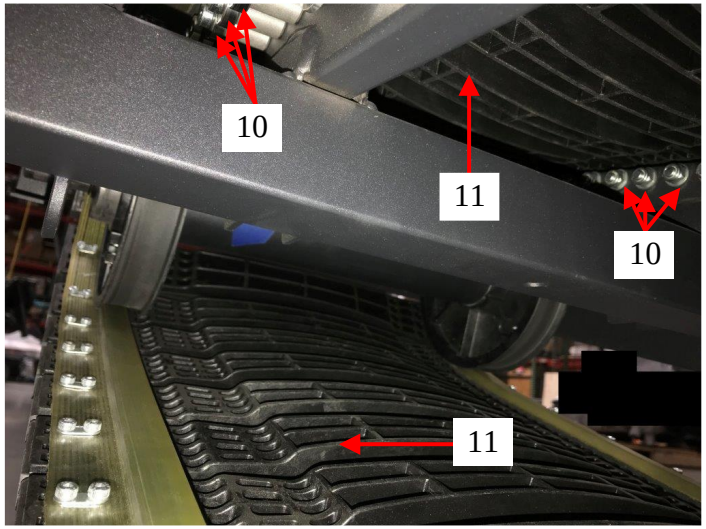 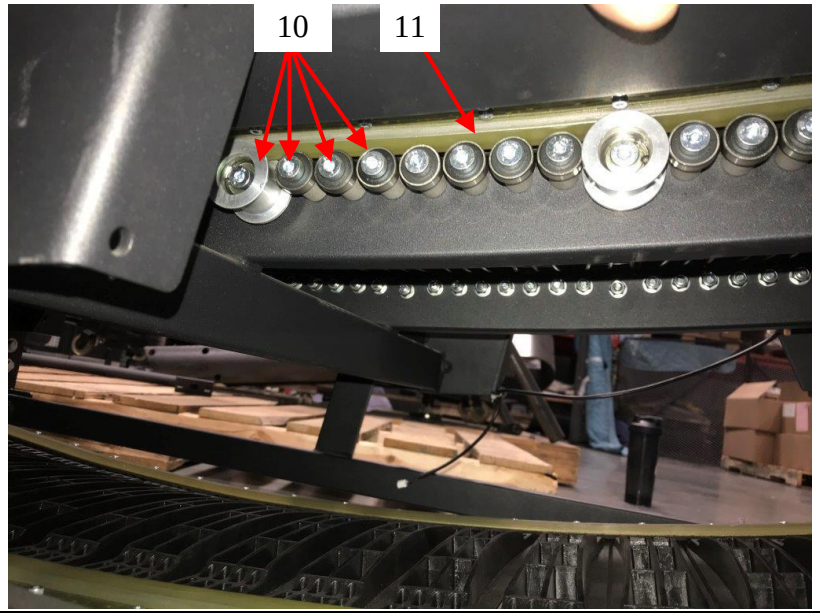

Appendix B – Claim Chart for U.S. Patent No. 10,561,884 ("the '884 Patent")

the '884 Patent	Assault Fitness AirRunner ("the Infringing Product")	
a safety device coupled to the frame and the running belt, the safety device having a first rotatable element and a second rotatable element, wherein at least one of the first and second rotatable elements are adapted for rotation relative to the frame;	A "safety device coupled to the frame and the running belt" having "a first rotatable element and a second rotatable element," where "at least one of the first and second rotatable elements are adapted for rotation relative to the frame" is literally present in the Infringing Product. The Court construed the term "safety device" as "a device that includes the elements recited and restricts rotation to allow for only one rotational direction of movement." *See* Dkt. 59 at 23. As shown, a safety device [13] is coupled to the frame [1] and the running belt [11]. As defined in the specification, and construed by the Court, "the term 'coupled' means the joining of two members directly or indirectly to one another. Such joining may be stationary or moveable in nature … . Such joining may be achieved with the two members or the two members and any additional intermediate members." *See* '884 Patent at col. 32, ll. 22-27; Dkt. 59 at 8, n.1.	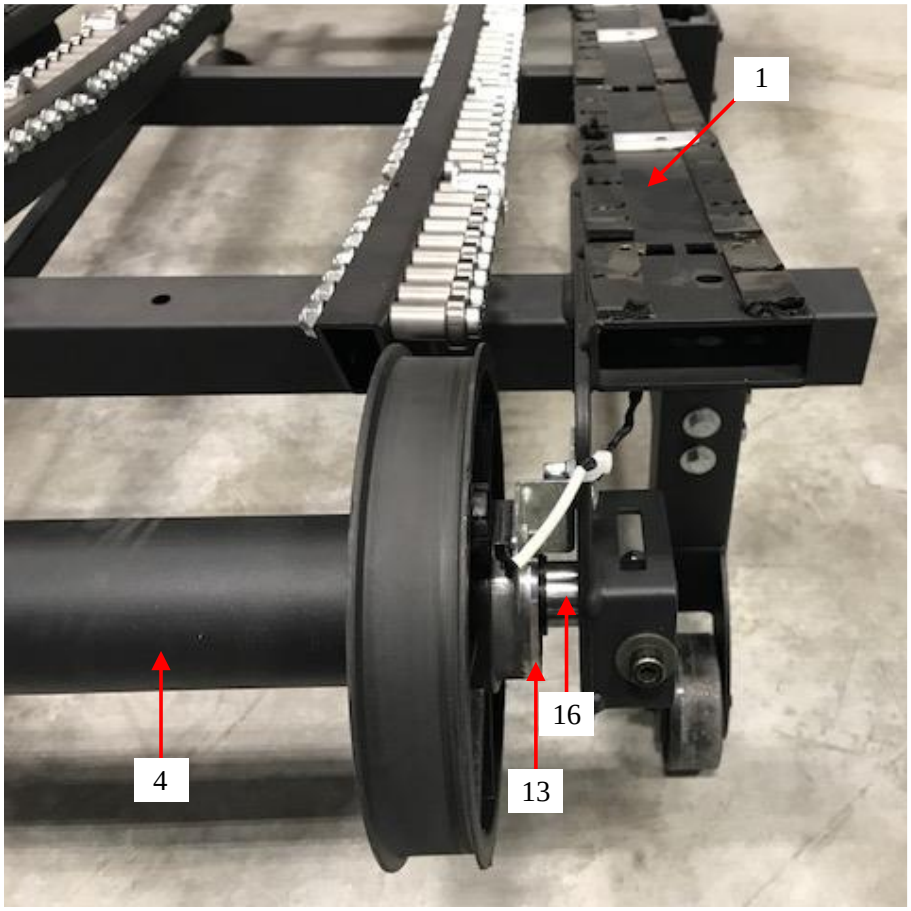

Appendix B – Claim Chart for U.S. Patent No. 10,561,884 ("the '884 Patent")

the '884 Patent	Assault Fitness AirRunner ("the Infringing Product")	
	Thus, coupling of the safety device [13] to the frame [1] and the running belt [11] may be directly or indirectly, such as through one or more intermediate members (*e.g.*, the safety device [13] is coupled to the frame [1] via support element [16] and coupled to the running belt [11] via front running belt pulley [6]). The safety device [13] includes a one-way bearing assembly. *See* LCF001767 (at row 75 "BEARING, ONE-WAY") and LCF002474 (describing the included One-Way Clutch Bearing as "i.e., the safety device"). Specifically, the safety device [13] includes an Altra Industrial Motion brand Combined Bearing/Freewheel type CSK 25 PP "sprag type freewheel[]." *See, e.g.*, Altra Industrial Motion, *Overrunning Clutches and Backstops* at p. 16 (2017). The CSK 25 PP has "both [an] inner and outer race." *Id.* at p. 4. The safety device [13] includes a first rotatable element [14] (*i.e.*, the "outer race") and a second rotatable element [15] (*i.e.*, the	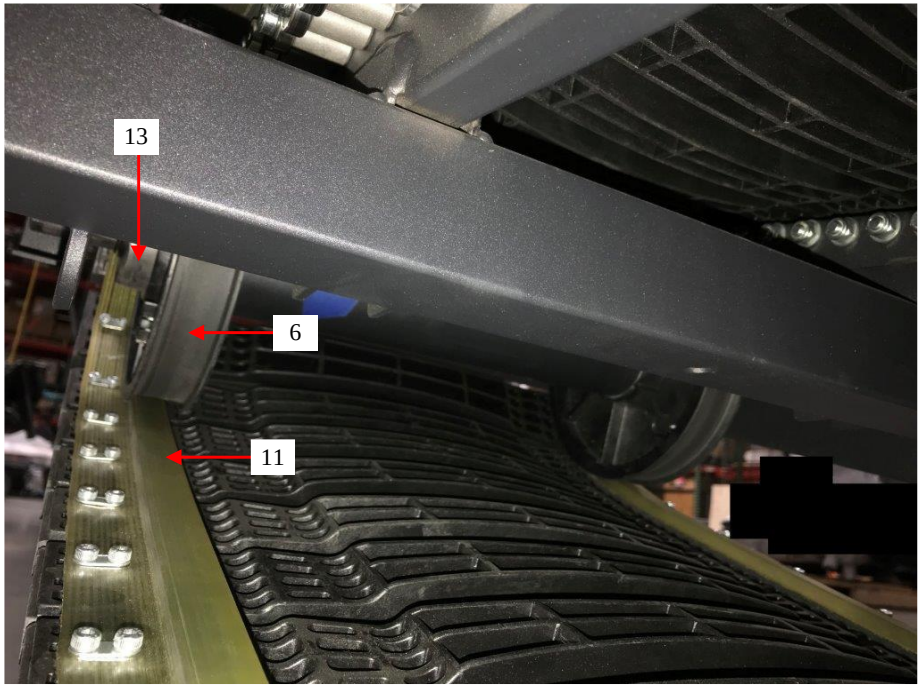 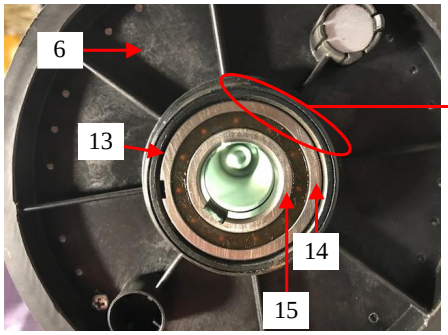

the '884 Patent	Assault Fitness AirRunner ("the Infringing Product")	
	"inner race"). "At least one of the first and second rotatable elements [that] are adapted for rotation relative to the frame" can mean that (i) only the first rotatable element is adapted for rotation relative to the frame; (ii) only the second rotatable element is adapted for rotation relative to the frame; or (iii) both of the first and second rotatable elements are adapted for rotation relative to the frame. In this configuration, the first rotatable element [14] is "adapted for rotation relative to the frame." The safety device [13] thus "restricts rotation to allow for only one rotational direction of movement." *See* LCF002474 (describing how the "One-Way Clutch Bearing (i.e., the Safety Device)" in combination with the "Front Shaft" [support element 16] allows the "Front Roller Subassembly" to rotate around the "Front Shaft" [i.e., the shaft internal to shaft 4] in only one direction.").	

Appendix B – Claim Chart for U.S. Patent No. 10,561,884 ("the '884 Patent")

the '884 Patent	Assault Fitness AirRunner ("the Infringing Product")	
wherein the running belt and one of the first and second rotatable elements of the safety device freely rotate in a first direction of rotation relative to the other of the first and second rotatable elements of the safety device, but interference between the safety device and at least one of the first and second rotatable elements substantially prevents rotation in a second direction of rotation, opposite the first direction of rotation, of the running belt and the one of the first and second rotatable elements relative to the other of the one of the first and second rotatable elements.	The "running belt and one of the first and second rotatable elements of the safety device freely rotate in a first direction of rotation relative to the other of the first and second rotatable elements of the safety device," but "interference between the safety device and at least one of the first and second rotatable elements substantially prevents rotation in a second direction of rotation, opposite the first direction of rotation, of the running belt and the one of the first and second rotatable elements relative to the other of the one of the first and second rotatable elements" is literally present in the Infringing Product. The Court construed the term "safety device" to incorporate the term "substantially prevent" as "a device that includes the elements recited and restricts rotation to allow for only one rotational direction of movement." *See* Dkt. 59 at 23. The safety device [13] includes a one-way bearing assembly. *See* LCF001767 (at row 75 "BEARING, ONE-WAY") and LCF002474 (describing the	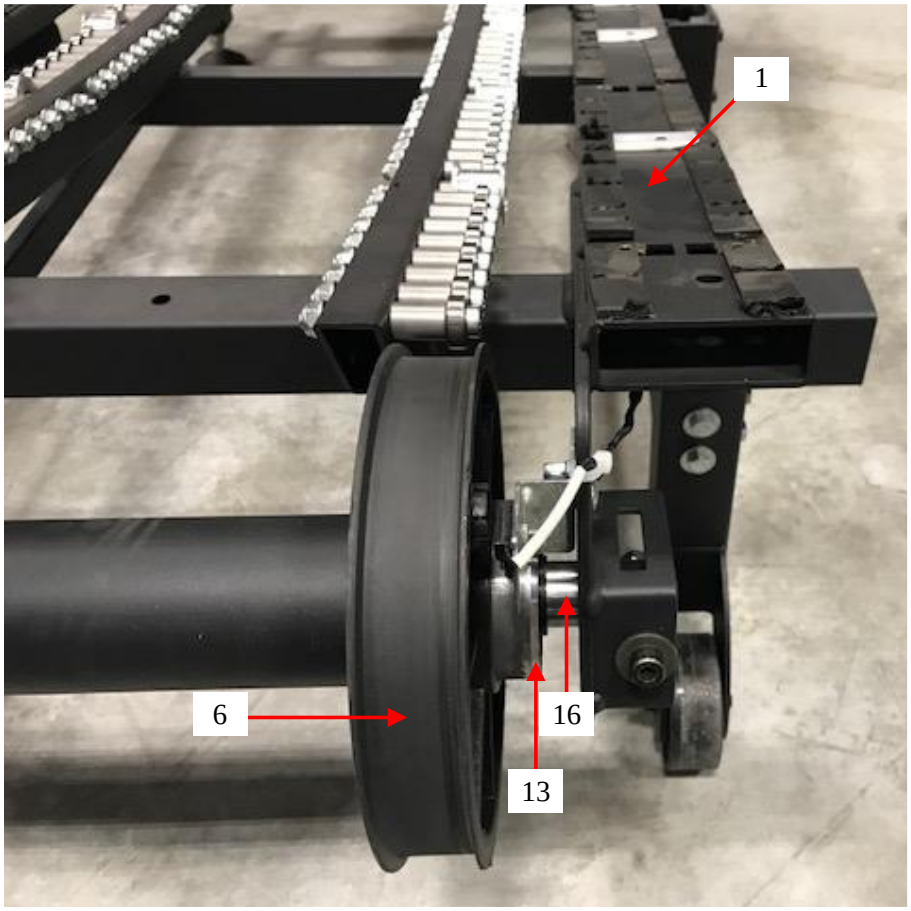

Appendix B – Claim Chart for U.S. Patent No. 10,561,884 ("the '884 Patent")

the '884 Patent	Assault Fitness AirRunner ("the Infringing Product")	
	included One-Way Clutch Bearing as "i.e., the safety device"). Specifically, the safety device [13] includes an Altra Industrial Motion brand Combined Bearing/Freewheel type CSK 25 PP "sprag type freewheel[]." *See, e.g.*, Altra Industrial Motion, *Overrunning Clutches and Backstops* at p. 16 (2017). The CSK 25 PP has "both [an] inner and outer race," and "locking elements are positioned between [the] outer and [the] inner race which effect engaging and disengaging." *Id.* at p. 4. As such, the CSK 25 PP "allows rotation in one direction only ... . The freewheel prevents reverse rotation if the drive is disconnected [*i.e.*, disengaged]... ." *Id.* at p. 3. Because the first rotatable element [14] of the safety device [13] is coupled to the running belt [11] via the front running belt pulley [6], and the safety device [13] "allows rotation in one direction," *Altra* at 4, the running belt [11] and the first rotatable element [14] freely rotate in a first direction of	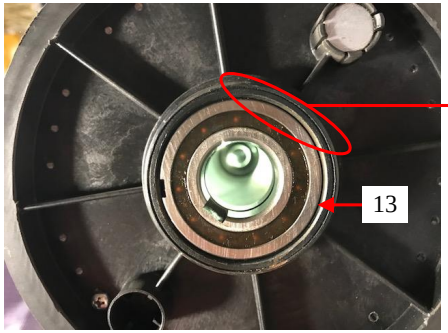 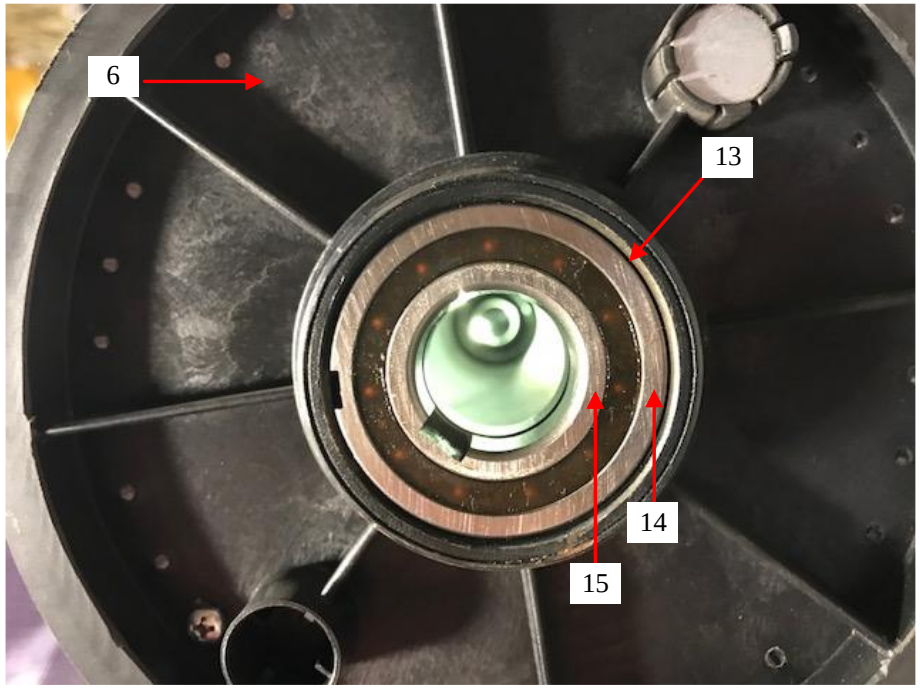

Appendix B – Claim Chart for U.S. Patent No. 10,561,884 ("the '884 Patent")

the '884 Patent	Assault Fitness AirRunner ("the Infringing Product")	
	rotation relative to the second rotatable element [15]. However, in a second direction of rotation, opposite the first direction of rotation, "engagement … [occurs] according to the relative motion of the" first and second rotatable elements [14] and [15], *id.* at p. 5, to substantially "prevent[] [a] reverse rotation," *Altra.* at p. 3, of the first rotatable element [14] and the running belt [11] relative to the second rotatable element [15]. *See also, e.g.*, LCF002474 (describing how the "One-Way Clutch Bearing (i.e., the Safety Device)" in combination with the "Front Shaft" [support element 16] allows the "Front Roller Subassembly" to rotate around the "Front Shaft" [i.e., the shaft internal to shaft 4] in only one direction."), and LCF001867 ("The belt moves freely in only one direction.").	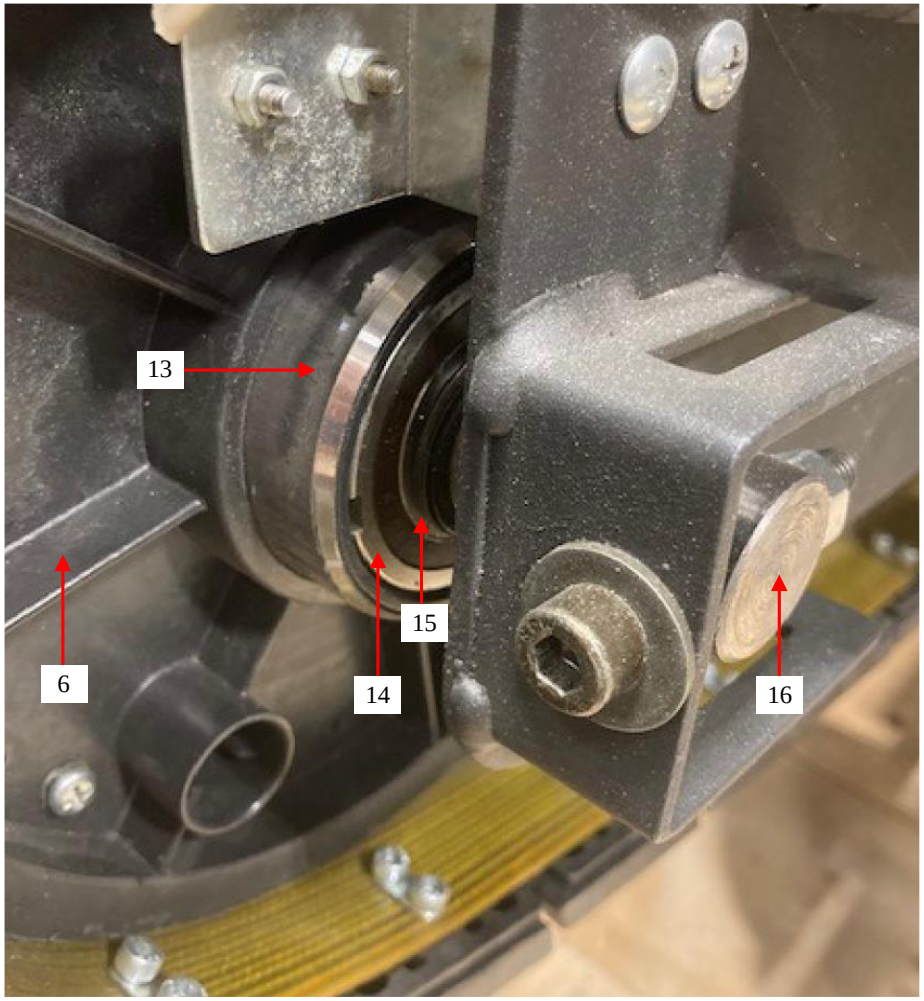

Appendix B – Claim Chart for U.S. Patent No. 10,561,884 ("the '884 Patent")

the '884 Patent	Assault Fitness AirRunner ("the Infringing Product")	
31. The manually powered treadmill of claim 30, wherein the frame includes a left side member, a right side member, and at least one cross-member extending between the left side member and the right side member, wherein the plurality of bearings includes a first plurality of bearings coupled to a left-side of the frame and a second plurality of bearings coupled to a right-side of the frame.	A frame having a "left side member, a right side member, and at least one cross-member extending between the left side member and the right side member," where "the plurality of bearings includes a first plurality of bearings coupled to a left-side of the frame and a second plurality of bearings coupled to a right-side of the frame" is literally present in the Infringing Product. As shown, the frame [1] includes the left side member [18] and the right side member [19]. At least one cross-member [20] extends between the left side member [18] and the right side member [19]. As also shown, the plurality of bearings [10] includes a first plurality of bearings [10C] coupled to a left-side of the frame [1] and a second plurality of bearings [10D] coupled to a right-side of the frame [1]. Thus, coupling the plurality of bearings [10] to the frame [1] may be directly or indirectly. Therefore and as shown, the	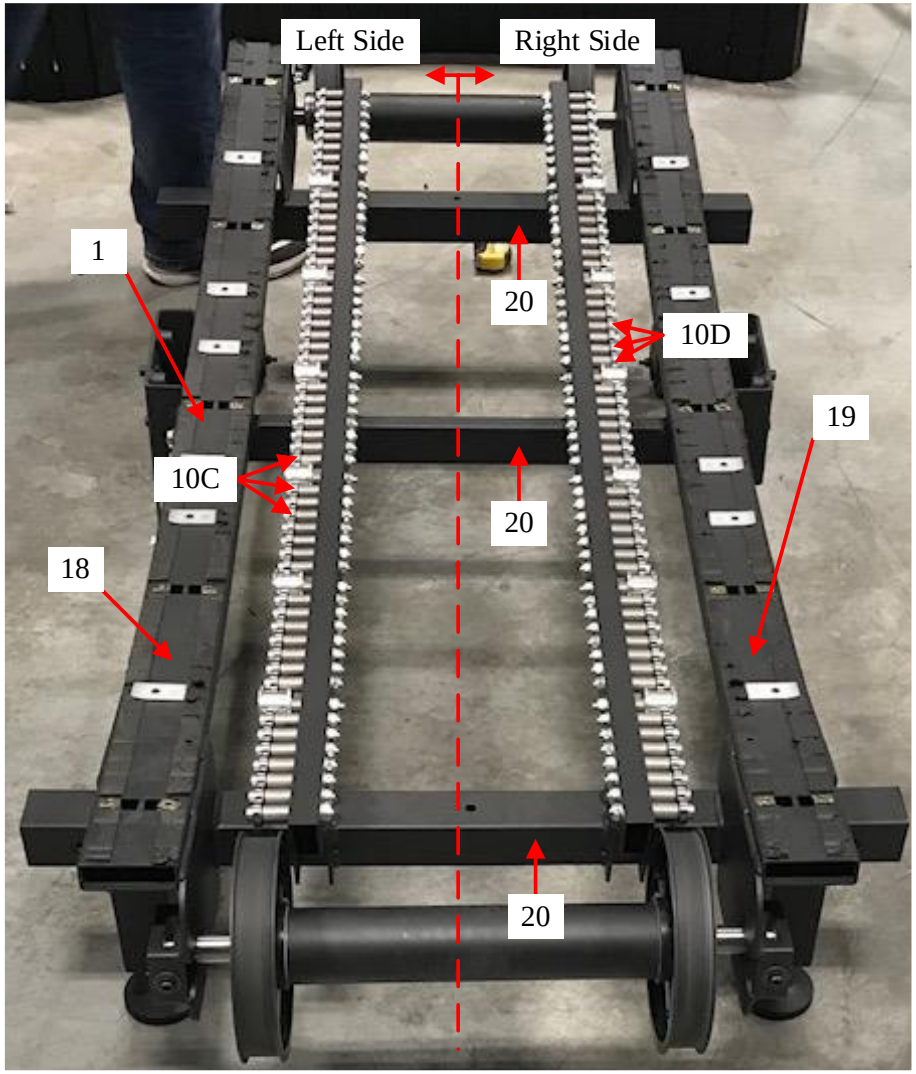

Appendix B – Claim Chart for U.S. Patent No. 10,561,884 ("the '884 Patent")

the '884 Patent	Assault Fitness AirRunner ("the Infringing Product")	
	plurality of bearings [10] is coupled to the frame [1] via the bearing rails [8], [9], which are welded to at least one cross-member, which is circled below. *See also, e.g.*, LCF002465 (titled "01 – Base Frame (Welded Together).pdf" illustrating the base frame including at least one cross member extending between left and right side members), and LCF002467 (titled "03 – Base Frame with Bearings – Guide Pulleys – Rollers.pdf" showing the bearing rails coupled to the left side and right side members).	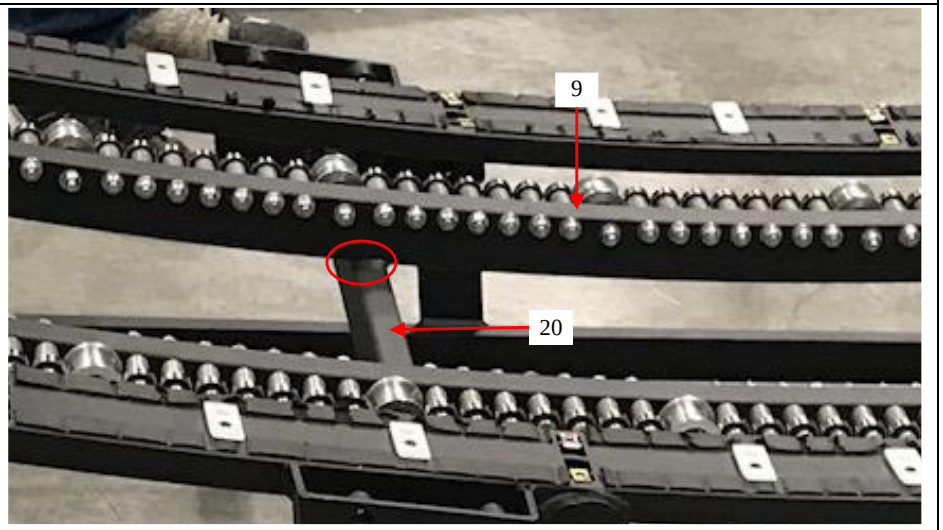 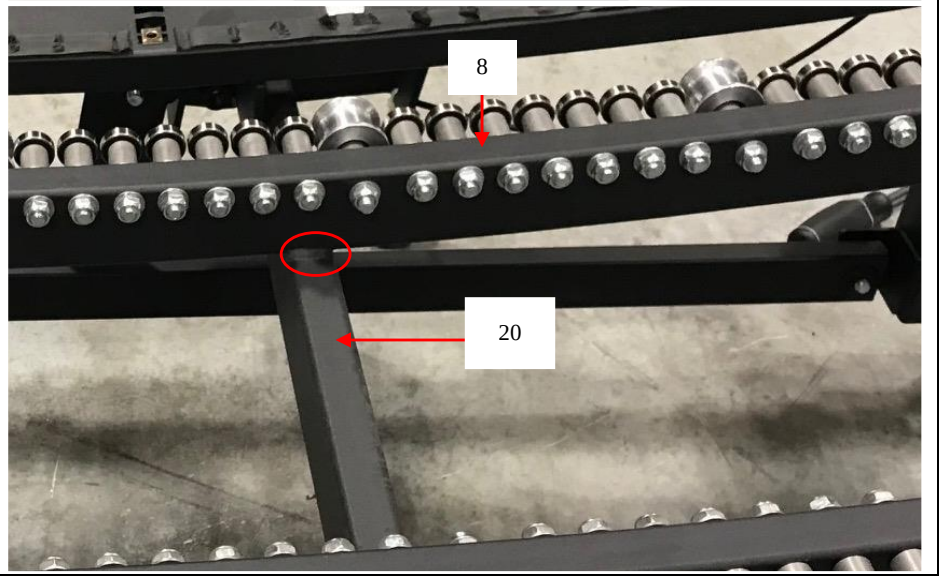

Appendix B – Claim Chart for U.S. Patent No. 10,561,884 ("the '884 Patent")

the '884 Patent	Assault Fitness AirRunner ("the Infringing Product")	
32. The manually powered treadmill of claim 31, wherein the first plurality of bearings and the second plurality of bearings each at least partially define a curved top profile, wherein the curved top profile substantially corresponds to at least a portion of the curved running surface.	A "first plurality of bearings and the second plurality of bearings" each at least partially defining "a curved top profile" where "the curved top profile substantially corresponds to at least a portion of the curved running surface" is literally present in the Infringing Product. As shown, the first plurality of bearings [10C] and the second plurality of bearings [10D] define a curved top profile [21] which substantially corresponds to at least a portion of the curved running surface [12]. *See also, e.g.,* LCF000166 (part no. 545* "Belt Support Bearing" and 545-A "Belt Support Bearing Assembly"), and LCF002467 (titled "03 – Base Frame with Bearings – Guide Pulleys – Rollers.pdf" showing the first plurality of bearings [10D] and the second plurality of bearings [10D] at least partially define a curved top profile substantially corresponding to at least a portion of the curved running surface).	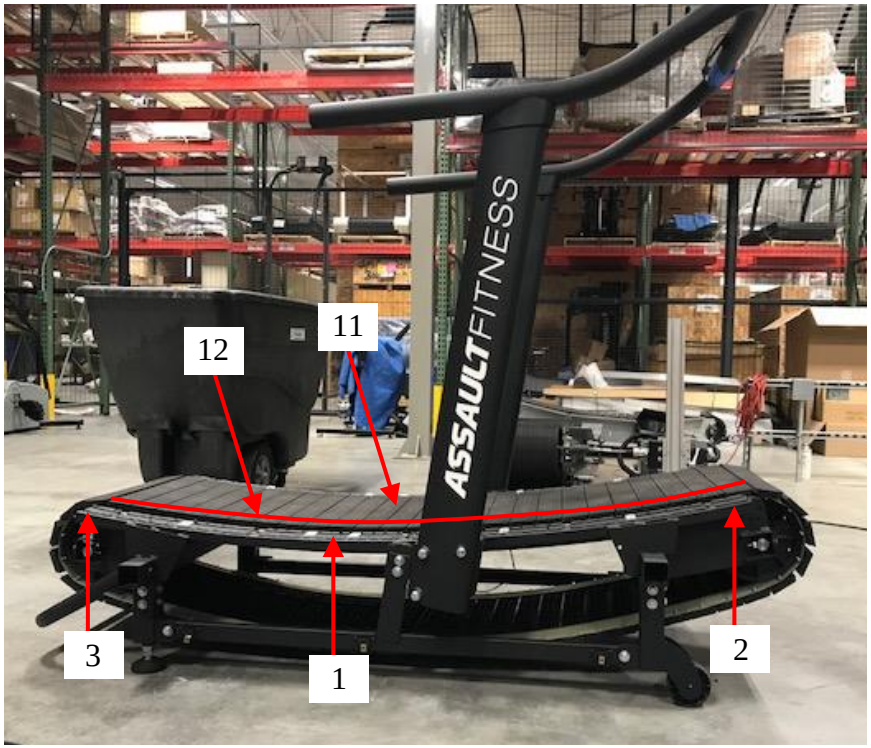 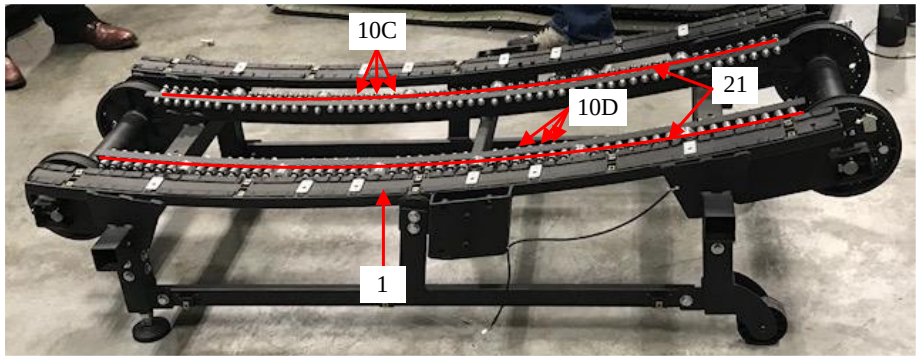

Appendix B – Claim Chart for U.S. Patent No. 10,561,884 ("the '884 Patent")

the '884 Patent	Assault Fitness AirRunner ("the Infringing Product")	
33. The manually powered treadmill of claim 30, wherein the first and second rotatable elements of the safety device at least partly form a one-way bearing.	The "first and second rotatable elements of the safety device" at least partly forming a "one-way bearing" is literally present in the Infringing Product. The safety device [13] includes an Altra Industrial Motion brand type CSK 25 PP. The CSK 25 PP has "both [an] inner and outer race," *see, e.g.*, Altra Industrial Motion, *Overrunning Clutches and Backstops* at p. 4 (2017), and is a "self-contained ball *bearing* unit[]," *id.* at p. 9 (emphasis added). Specifically, the safety device [13] is a CSK 25 PP "sprag type freewheel[] integrated into a 62 … series ball *bearing*[] ... ." *Id.* at p. 16. The CSK 25 PP "allows rotation in one direction only ... . The freewheel prevents reverse rotation ... ." *Id.* at p. 3. As shown, the safety device [13] is at least partly formed by the first rotatable element [14] and the second rotatable element [15] as a one-way bearing — that is it is "self-contained ball *bearing* unit[]," *id.* at p. 9 (emphasis added), which "allows rotation in one direction only ... . The	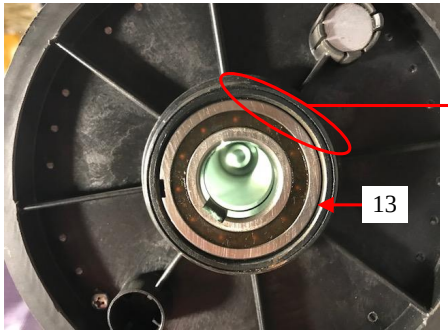 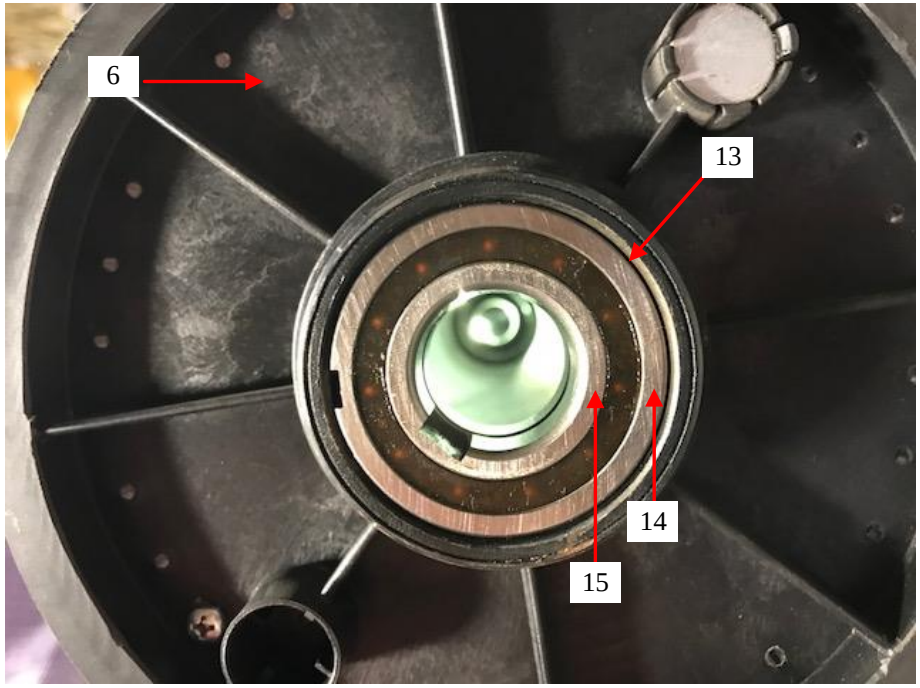

Appendix B – Claim Chart for U.S. Patent No. 10,561,884 ("the '884 Patent")

the '884 Patent	Assault Fitness AirRunner ("the Infringing Product")	
	freewheel prevents reverse rotation ... ." *Id.* at p. 3. Thus, the safety device is a bearing that allows rotation in only one direction (*i.e.*, a one-way bearing). *See also, e.g.,* LCF001767 (at row 75 "BEARING, ONE-WAY") and LCF002474 (describing the included One-Way Clutch Bearing as "i.e., the safety device").	

Appendix B – Claim Chart for U.S. Patent No. 10,561,884 ("the '884 Patent")

the '884 Patent	Assault Fitness AirRunner ("the Infringing Product")	
34. The manually powered treadmill of claim 30, further comprising at least one support foot coupled to the frame, wherein the at least one support foot is adjustable to enable an adjustment of the relative vertical incline of at least a portion of the manually powered treadmill in relation to a surface supporting the manually powered treadmill.	"[A]t least one support foot coupled to the frame" that is "adjustable to enable an adjustment of the relative vertical incline of at least a portion of the manually powered treadmill in relation to a surface supporting the manually powered treadmill" is literally present in the Infringing Product. As shown, at least one support foot [27A] is coupled to the frame [1] using a threaded rod [28] to allow vertical adjustment relative to the frame [1] to adjust the vertical incline of the treadmill relative to a support surface for the manually powered treadmill. *See also, e.g.,* LCF000166 (part nos. 557* "Leveling Foot" and 557-A "Leveling Foot Assembly"), and LCF000168 (under "Assembly Step Seven" "[e]nsure the unit is level and does not rock by adjusting the Stabilizer Leveling Feet").	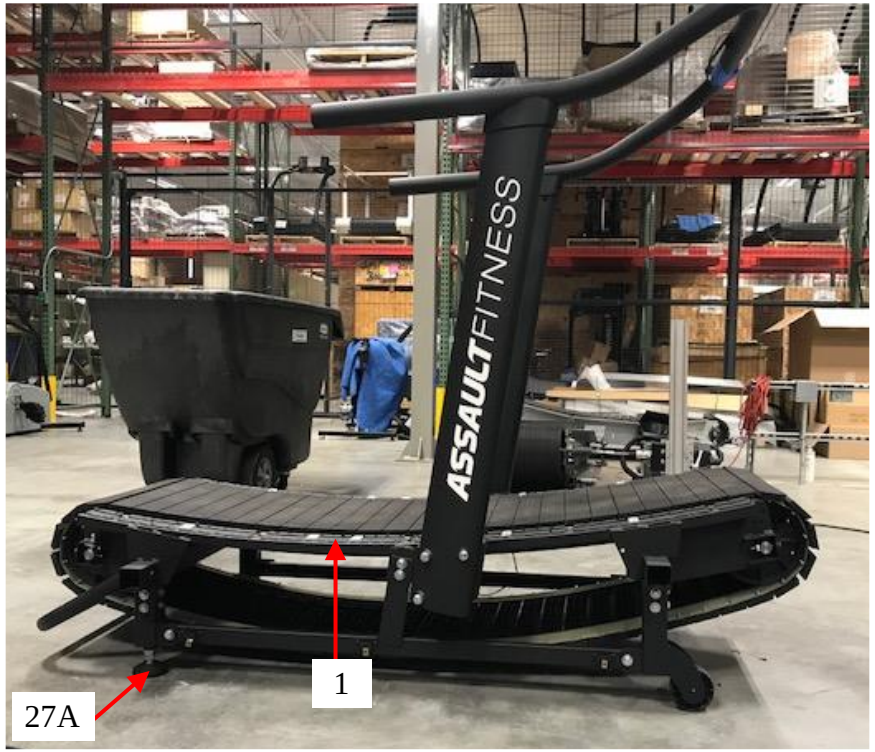 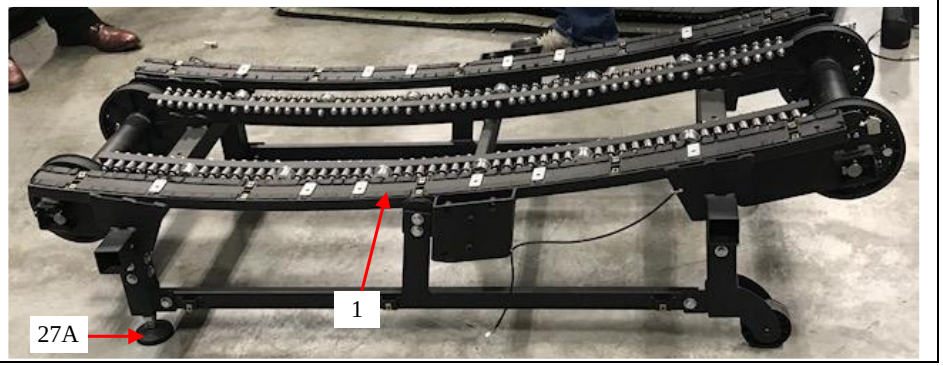

Appendix B – Claim Chart for U.S. Patent No. 10,561,884 (“the ’884 Patent”)

the ’884 Patent	Assault Fitness AirRunner (“the Infringing Product”)	
		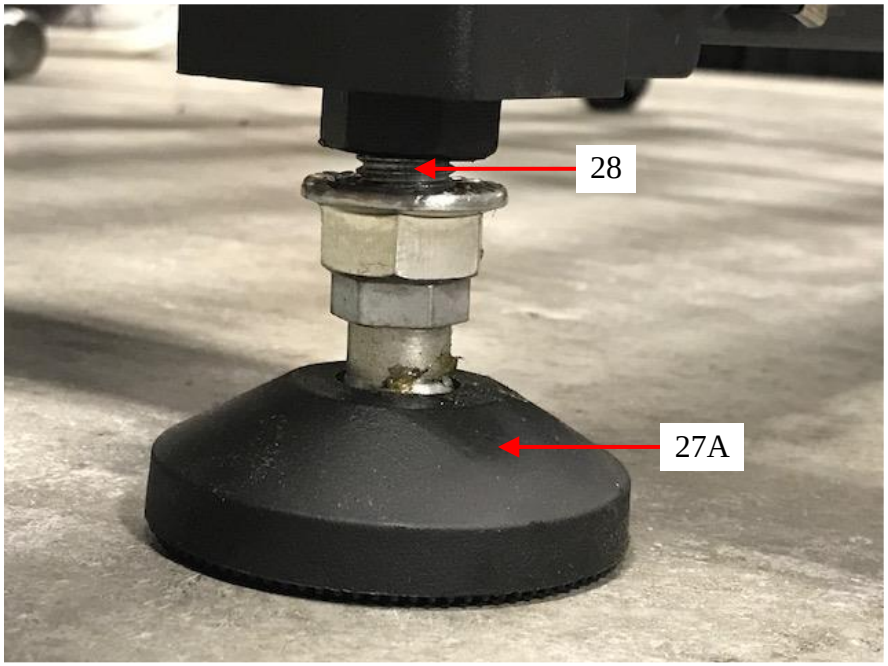

Appendix B – Claim Chart for U.S. Patent No. 10,561,884 ("the '884 Patent")

the '884 Patent	Assault Fitness AirRunner ("the Infringing Product")	
37. A manually powered treadmill, comprising:	A "manually powered treadmill" is literally the infringing product. The pictured Assault Fitness AirRunner is described in the Assault AirRunner Marketing Brochure, as a "completely manual [treadmill], with no electrical consumption." *See, e.g., AirRunner The Premier Elite Fitness Running Machine* Brochure at p. 2 (2017). *See also, e.g.,* LCF000017 ("The Assault AirRunner completely redefines the manual treadmill…"), LCF000678 ("Manual Treadmill"), LCF001832 (Model described as "AirRunner Manual Treadmill"), and LCF001866 (The "Assault AirRunner Warning Label" states "This treadmill is manually operated").	

Appendix B – Claim Chart for U.S. Patent No. 10,561,884 ("the '884 Patent")

the '884 Patent	Assault Fitness AirRunner ("the Infringing Product")	
a frame;	A "frame" is literally present in the Infringing Product. As shown, the manually powered treadmill includes a frame [1]. *See also, e.g.,* LCF001762 (identifying part no. 501 as "Main Frame"), LCF001764 (identifying part no. 501 as "Main Frame"), LCF001766 (identifying part no. 501 as "Main Frame"), LCF002465 (titled "01 – Base Frame (Welded Together).pdf").	

Appendix B – Claim Chart for U.S. Patent No. 10,561,884 ("the '884 Patent")

the '884 Patent	Assault Fitness AirRunner ("the Infringing Product")	
a first plurality of bearings coupled to the frame;	A "first plurality of bearings coupled to the frame" is literally present in the Infringing Product. As shown, a first plurality of bearings [10C] is coupled to the frame [1]. As defined in the specification, and construed by the Court, "the term 'coupled' means the joining of two members directly or indirectly to one another. Such joining may be stationary or moveable in nature … . Such joining may be achieved with the two members or the two members and any additional intermediate members." *See* '884 Patent at col. 32, ll. 22-27; Dkt. 59 at 8, n.1. Thus, the first plurality of the bearings [10C] may be coupled to the frame [1] directly or indirectly. *See also, e.g.,* LCF000166 (part nos. 545* "Belt Support Bearing" and 545-A "Belt Support Bearing Assembly" a portion of which correspond to a first plurality of bearings [10]), LCF001993 (under "Specifications" "Running Belt	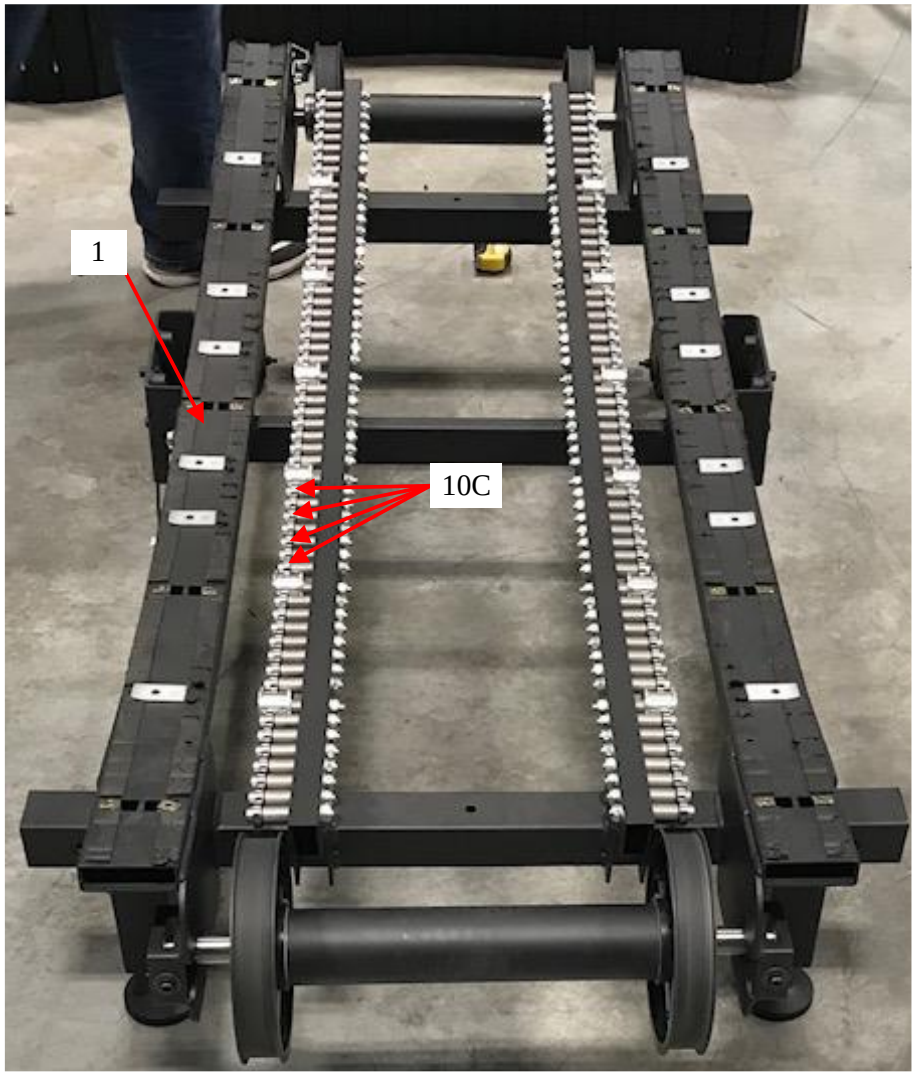

Appendix B – Claim Chart for U.S. Patent No. 10,561,884 (“the ’884 Patent”)

the ’884 Patent	Assault Fitness AirRunner (“the Infringing Product”)	
	Support: 12 Guide Pulleys; 100 Cartridge Bearings”), LCF002133 (under “Components” “Drive System” listed “100 Precision Ball Bearings w/ 12 Roller Guides”), and LCF002467 (titled “03 – Base Frame with Bearings – Guide Pulleys – Rollers.pdf” showing a first plurality of bearings coupled to the frame).	

Appendix B – Claim Chart for U.S. Patent No. 10,561,884 ("the '884 Patent")

the '884 Patent	Assault Fitness AirRunner ("the Infringing Product")	
a second plurality of bearings coupled to the frame and spaced a distance from the first plurality of bearings;	A "second plurality of bearings coupled to the frame, and spaced a distance from the first plurality of bearings" is literally present in the Infringing Product. As shown, a second plurality of bearings [10D] is coupled to the frame [1] and spaced apart from the first plurality of bearings [10C]. As defined in the specification, and construed by the Court, "the term 'coupled' means the joining of two members directly or indirectly to one another. Such joining may be stationary or moveable in nature … . Such joining may be achieved with the two members or the two members and any additional intermediate members." *See* '884 Patent at col. 32, ll. 22-27; Dkt. 59 at 8, n.1. Thus, the second plurality of the bearings [10D] may be coupled to the frame [1] directly or indirectly. *See also, e.g.,* LCF000166 (part nos. 545* "Belt Support Bearing" and 545-A "Belt Support Bearing Assembly" a	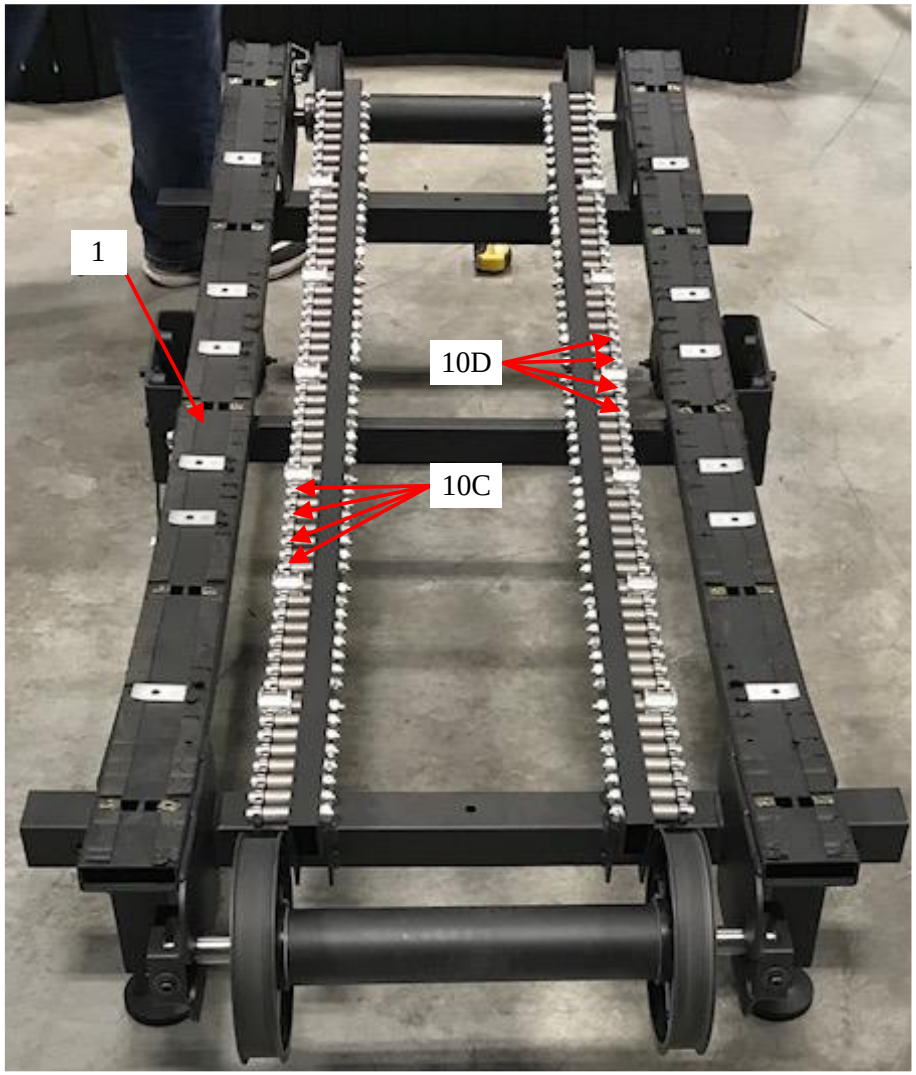

Appendix B – Claim Chart for U.S. Patent No. 10,561,884 (“the ’884 Patent”)

the ’884 Patent	Assault Fitness AirRunner (“the Infringing Product”)	
	portion of which correspond to a second plurality of bearings [10]), LCF001993 (under “Specifications” “Running Belt Support: 12 Guide Pulleys; 100 Cartridge Bearings”), LCF002133 (under “Components” “Drive System” listed “100 Precision Ball Bearings w/ 12 Roller Guides”), and LCF002467 (titled “03 – Base Frame with Bearings – Guide Pulleys – Rollers.pdf” showing a second plurality of bearings coupled to the frame).	

Appendix B – Claim Chart for U.S. Patent No. 10,561,884 ("the '884 Patent")

the '884 Patent	Assault Fitness AirRunner ("the Infringing Product")	
a front shaft assembly coupled to the frame;	A ""Front Shaft" assembly coupled to the frame" is literally present in the Infringing Product. The Court adopted the plain and ordinary meaning of the term "shaft." As shown, a front shaft assembly [29], which designates an assembly of components and not a single element, is coupled to the frame [1]. As defined in the specification, and construed by the Court, "the term 'coupled' means the joining of two members directly or indirectly to one another … . Such joining may be achieved with the two members or the two members and any additional intermediate members." *See* '884 Patent at col. 32, ll. 22-27; Dkt. 59 at 8, n.1. Thus, the front shaft assembly [29] may be coupled to the frame directly or indirectly through an intermediate member (*e.g.*, via support element [16]). *See also, e.g.*, LCF000166 (part nos. 511* "Front Roller," and	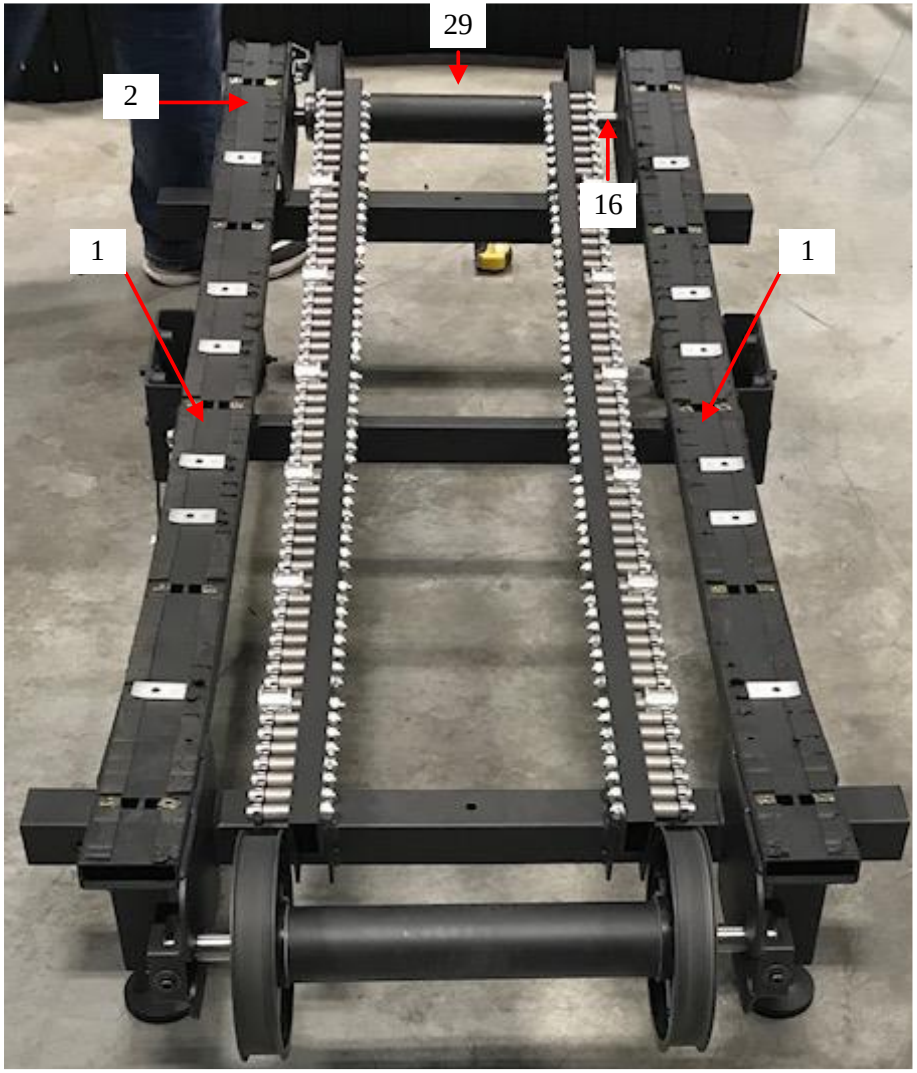

Appendix B – Claim Chart for U.S. Patent No. 10,561,884 ("the '884 Patent")

the '884 Patent	Assault Fitness AirRunner ("the Infringing Product")	
	511-A "Front Roller Assembly" which correspond to the "Front Shaft Assembly" [29]).	
a rear shaft assembly coupled to the frame;	A "rear shaft assembly coupled to the frame" is literally present in the Infringing Product. The Court adopted the plain and ordinary meaning of the term "shaft." As shown, a rear shaft assembly [30] is coupled to the frame [1]. As defined in the specification, and construed by the Court, "the term 'coupled' means the joining of two members directly or indirectly to one another … . Such joining may be achieved with the two members or the two members and any additional intermediate members." *See* '884 Patent at col. 32, ll. 22-27; Dkt. 59 at 8, n.1. Thus, the rear shaft assembly [30] may be coupled to the frame [1] directly or indirectly through an intermediate member (*e.g.*, via support element [17]). *See also, e.g.*, LCF000166 (illustrating part no. 512* "Rear Roller," and part no. 512-A	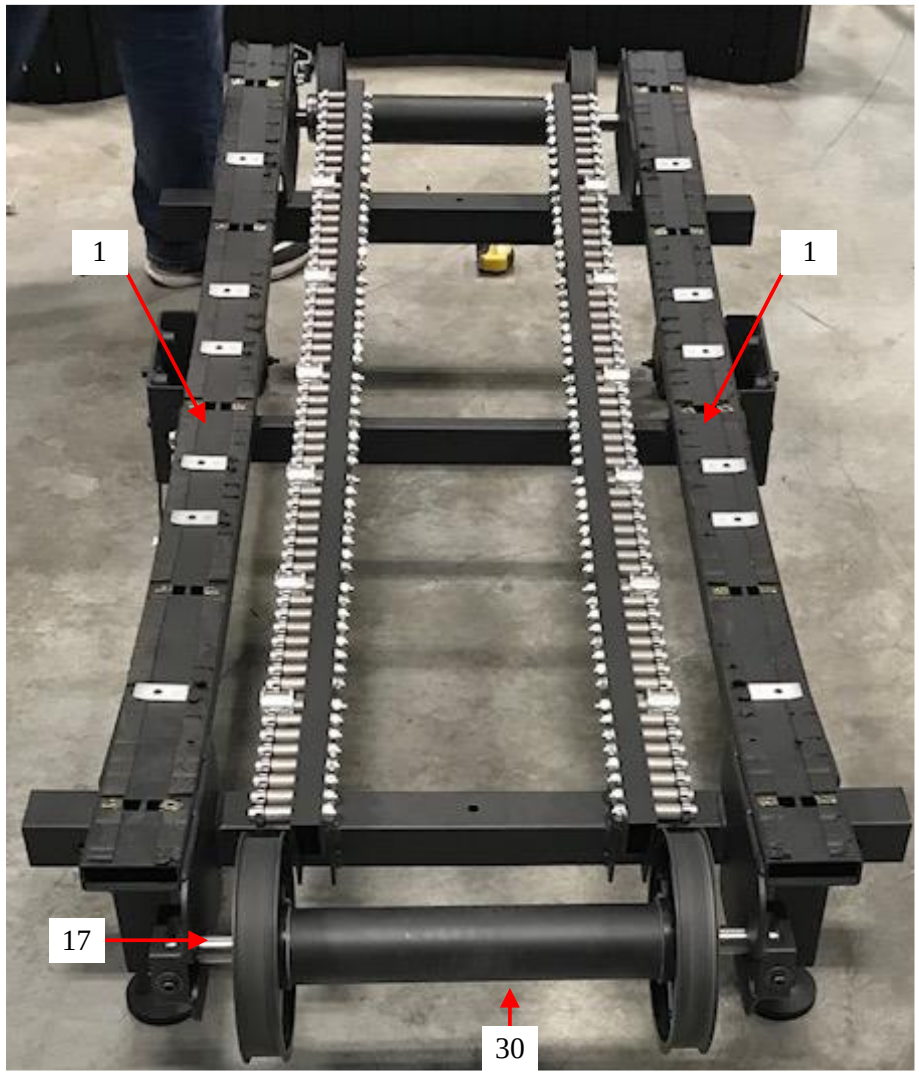

Appendix B – Claim Chart for U.S. Patent No. 10,561,884 ("the '884 Patent")

the '884 Patent	Assault Fitness AirRunner ("the Infringing Product")	
	"Rear Roller Assembly" which corresponds to a rear shaft assembly coupled to the frame) and LCF002470 (titled "03c – Rear Roller Assembly.pdf" illustrating of the "Rear Roller Assembly" includes a plurality of shafts).	
a running belt at least partially supported by the first plurality of bearings and the second plurality of bearings, the running belt being at least partially disposed about the front and rear shaft assemblies, and comprising a running surface, at least a portion of which is curved; and	A "running belt" at least partially supported by "the first plurality of bearings and the second plurality of bearings," at least "partially disposed about the front and rear shaft assemblies," and having "a running surface, at least a portion of which is curved" is literally present in the Infringing Product. As shown, running belt [11] is at least partially supported by the first plurality of bearings [10C] and the second plurality of bearings [10D] and includes a curved running surface [12]. As also shown, the running belt [11] is disposed about the front shaft assembly [29] and the rear shaft assembly [30]. While the third picture only shows the running belt [11] disposed around the front shaft assembly	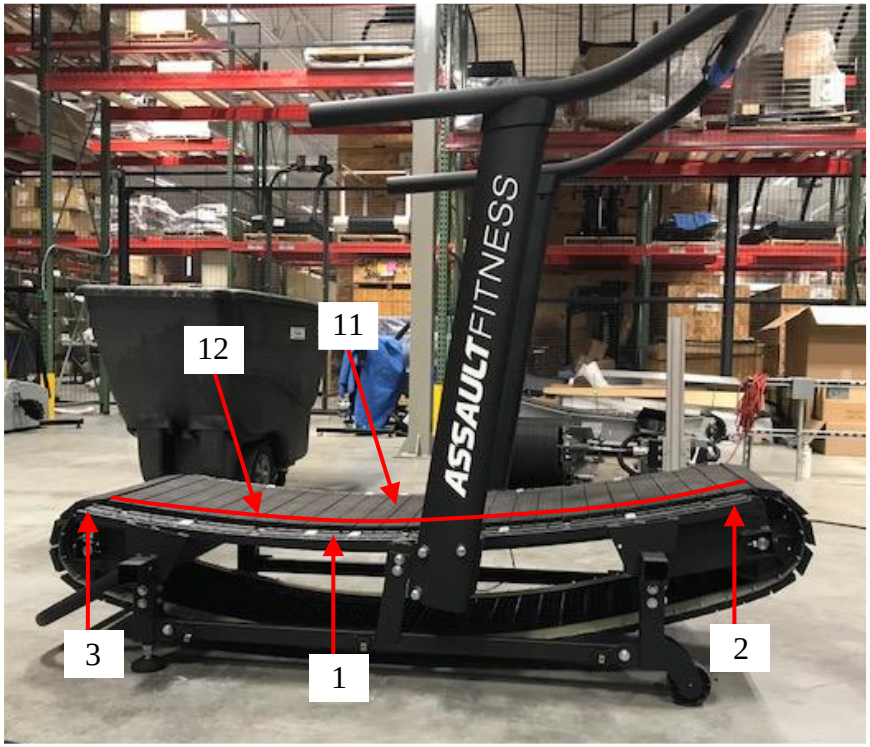

Appendix B – Claim Chart for U.S. Patent No. 10,561,884 ("the '884 Patent")

the '884 Patent	Assault Fitness AirRunner ("the Infringing Product")	
	[29], a similar configuration is provided with the rear shaft assembly [30] in that the running belt [11] is disposed about the rear shaft assembly [30]. *See also, e.g.,* LCF000895 (under "Low Impact" describing the treadmill belt as "The contoured design…"), LCF02133 (under "Belt Design" describing the belt as "Contoured"), and LCF002471 (describing the "Belt Assembly is then lowered onto the front and rear roller pulleys, side support bearings, and guide pulleys," and that "the top portion of the belt rests upon the supporting bearings and guide pulleys").	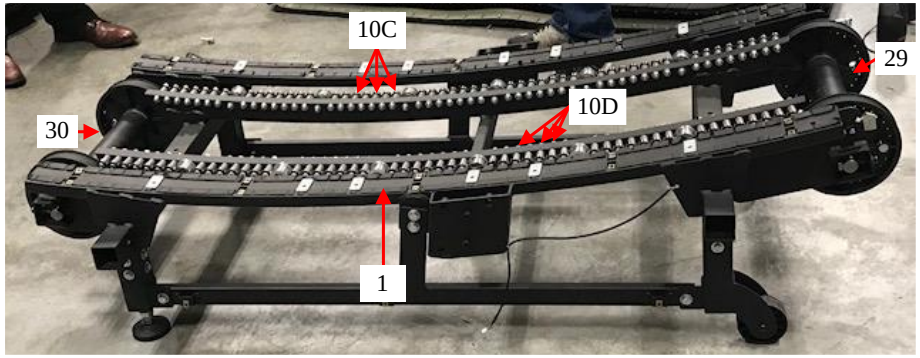 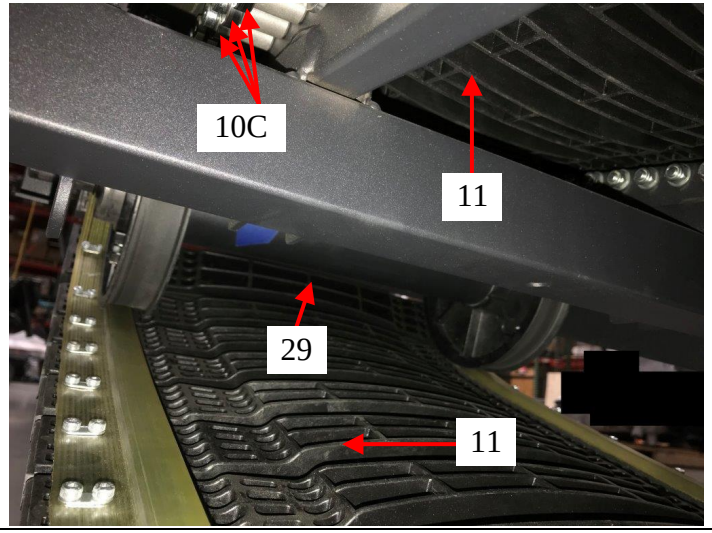

Appendix B – Claim Chart for U.S. Patent No. 10,561,884 ("the '884 Patent")

the '884 Patent	Assault Fitness AirRunner ("the Infringing Product")	
a safety device coupled to the frame and the running belt, the safety device having a first rotatable element and a second rotatable element, wherein at least one of the first and second rotatable elements are adapted for rotation relative to the frame;	A "safety device coupled to the frame and the running belt" having "a first rotatable element and a second rotatable element," where "at least one of the first and second rotatable elements are adapted for rotation relative to the frame" is literally present in the Infringing Product. The Court construed the term "safety device" as "a device that includes the elements recited and restricts rotation to allow for only one rotational direction of movement." *See* Dkt. 59 at 23. As shown, a safety device [13] is coupled to the frame [1] and the running belt [11]. As defined in the specification, and construed by the Court, "the term 'coupled' means the joining of two members directly or indirectly to one another. Such joining may be stationary or moveable in nature … . Such joining may be achieved with the two members or the two members and any additional intermediate members." *See* '884 Patent at col. 32, ll. 22-27; Dkt. 59 at 8, n.1.	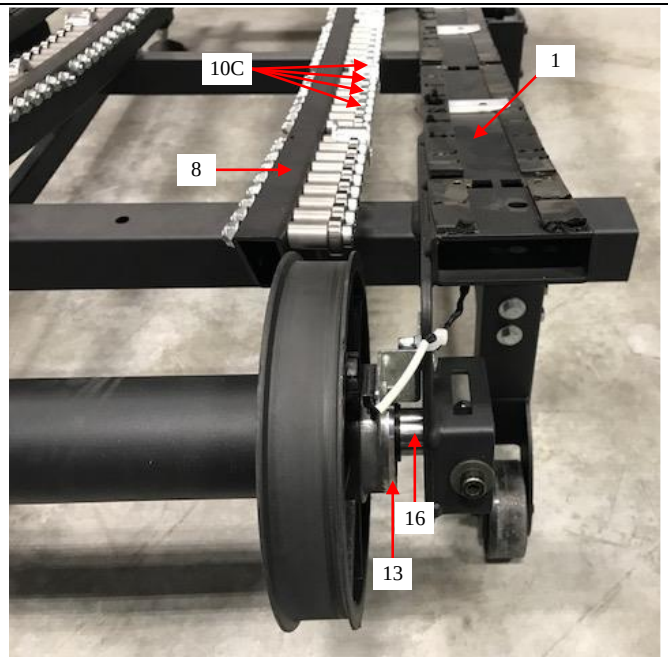 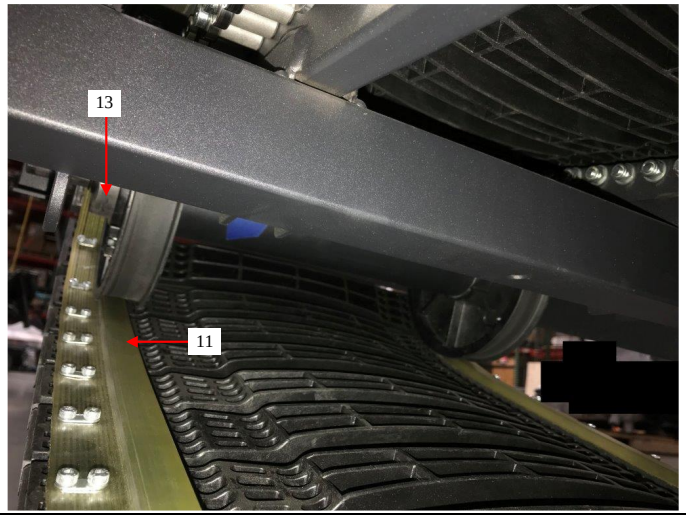

Appendix B – Claim Chart for U.S. Patent No. 10,561,884 ("the '884 Patent")

the '884 Patent	Assault Fitness AirRunner ("the Infringing Product")	
	Thus, the safety device [13] may be coupled to the frame [1] and the running belt [11] directly or indirectly through one or more intermediate members (*e.g.*, the safety device [13] is coupled to the frame [1] via the support element [16] and to the running belt [11] via front running belt pulley [6]). The safety device [13] includes a one-way bearing assembly. *See* LCF001767 (at row 75 "BEARING, ONE-WAY") and LCF002474 (describing the included One-Way Clutch Bearing as "i.e., the safety device"). Specifically, the safety device [13] includes an Altra Industrial Motion brand Combined Bearing/Freewheel type CSK 25 PP "sprag type freewheel[]." *See, e.g.*, Altra Industrial Motion, *Overrunning Clutches and Backstops* at p. 16 (2017). The CSK 25 PP has "both [an] inner and outer race." Id. at p. 4. Therefore, the safety device [13] includes a first rotatable element [14] (*i.e.*, the "outer race") and a second rotatable element [15] (*i.e.*, the "inner race"). "At least	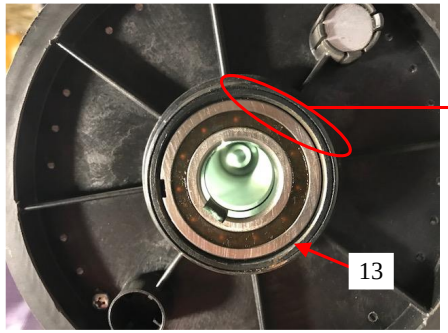 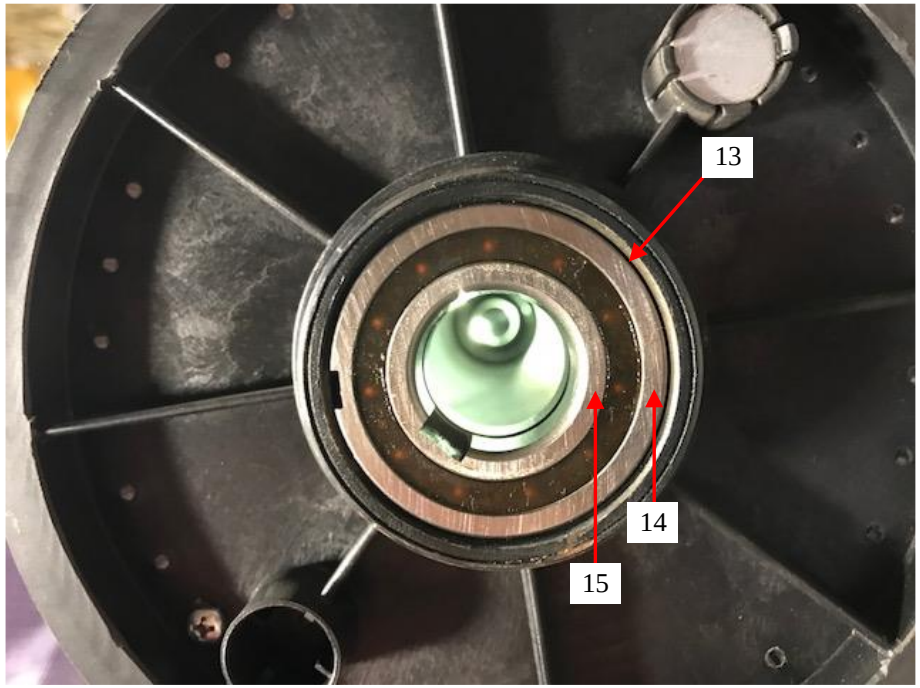

the '884 Patent	Assault Fitness AirRunner ("the Infringing Product")	
	one of the first and second rotatable elements [that] are adapted for rotation relative to the frame" can mean that (i) only the first rotatable element is adapted for rotation relative to the frame; (ii) only the second rotatable element is adapted for rotation relative to the frame; or (iii) both of the first and second rotatable elements are adapted for rotation relative to the frame. In this configuration, the first rotatable element [14] is "adapted for rotation relative to the frame." The safety device [13] thus "restricts rotation to allow for only one rotational direction of movement." *See also, e.g.,* LCF002474 (describing how the "One-Way Clutch Bearing (i.e., the Safety Device)" in combination with the "Front Shaft" [support element 16] allows the "Front Roller Subassembly" to rotate around the "Front Shaft" [i.e., the shaft internal to shaft 4] in only one direction.").	

Appendix B – Claim Chart for U.S. Patent No. 10,561,884 ("the '884 Patent")

the '884 Patent	Assault Fitness AirRunner ("the Infringing Product")	
wherein one of the first and second rotatable elements of the safety device and the running belt freely rotate relative to the other of the one of the first and second rotatable elements of the safety device in a first direction of rotation relative to the frame, however, in a second direction of rotation, opposite the first direction of rotation, interference between the safety device and at least one of the first rotatable element and the second rotatable element substantially prevents rotation of the running belt and the one of the first and second rotatable elements relative to the other of the one of the first and second rotatable elements.	"[O]ne of the first and second rotatable elements of the safety device and the running belt [that] freely rotate relative to the other of the one of the first and second rotatable elements of the safety device in a first direction of rotation relative to the frame" but "in a second direction of rotation, opposite the first direction of rotation, interference between the safety device and at least one of the first rotatable element and the second rotatable element substantially prevents rotation of the running belt and the one of the first and second rotatable elements relative to the other of the one of the first and second rotatable elements" is literally present in the Infringing Product. The Court construed the term "safety device" as "a device that includes the elements recited and restricts rotation to allow for only one rotational direction of movement." *See* Dkt. 59 at 23. The safety device [13] includes a one-way bearing assembly. *See* LCF001767 (at row 75 "BEARING, ONE-WAY") and LCF002474 (describing the	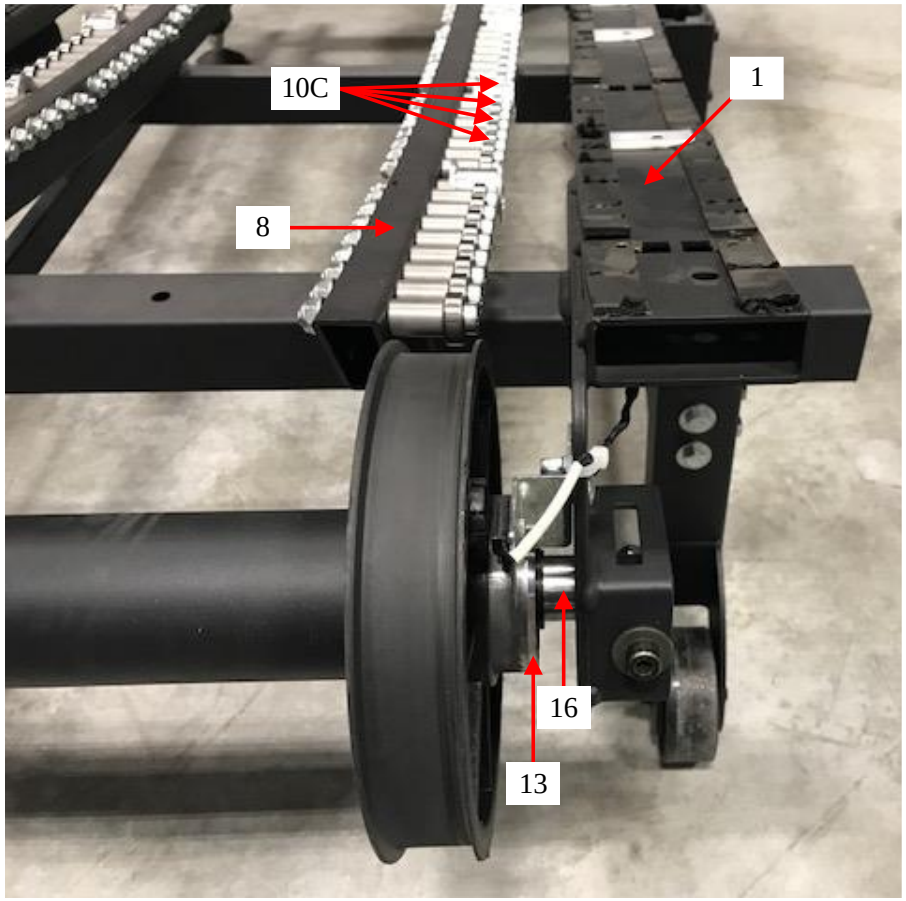

Appendix B – Claim Chart for U.S. Patent No. 10,561,884 ("the '884 Patent")

the '884 Patent	Assault Fitness AirRunner ("the Infringing Product")	
	included One-Way Clutch Bearing as "i.e., the safety device"). Specifically, the safety device [13] includes an Altra Industrial Motion brand Combined Bearing/Freewheel type CSK 25 PP "sprag type freewheel[]." *See, e.g.*, Altra Industrial Motion, *Overrunning Clutches and Backstops* at p. 16 (2017). The CSK 25 PP has "both [an] inner and outer race," and "locking elements are positioned between [the] outer and [the] inner race which effect engaging and disengaging." *Id.* at p. 4. The CSK 25 PP "allows rotation in one direction only ... . The freewheel prevents reverse rotation if the drive is disconnected [*i.e.*, disengaged] ... ." *Id.* at p. 3. *See* LCF002474 (describing how the "One-Way Clutch Bearing (i.e., the Safety Device)" in combination with the "Front Shaft" [support element 16] allows the "Front Roller Subassembly" to rotate around the "Front Shaft" [i.e., the shaft internal to shaft 4] in only one direction.").	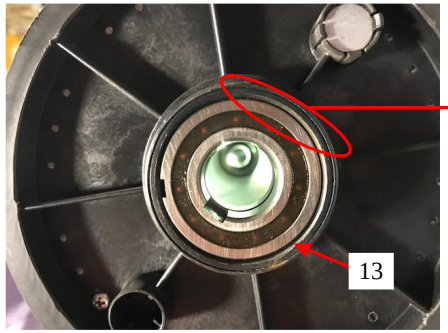 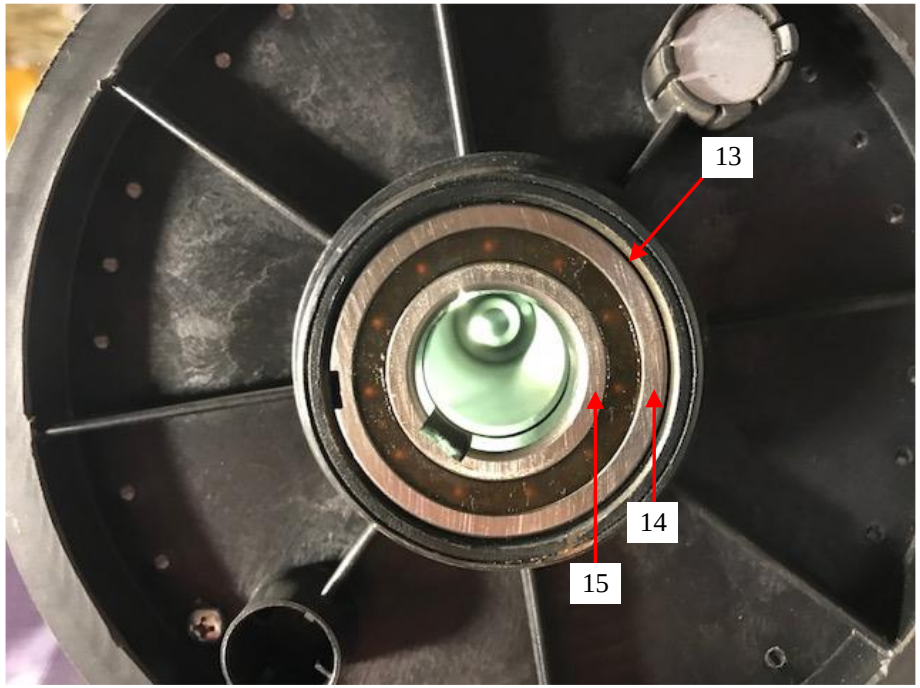
	Because the safety device [13] has "both [an] inner and outer	

the '884 Patent	Assault Fitness AirRunner ("the Infringing Product")	
	race," *id.* at p. 4, and is coupled to the running belt [11] via the front running belt pulley [6], and the safety device [13] "allows rotation in one direction," *id.*, the running belt [11] and the first rotatable element [14] freely rotate in a first direction of rotation relative to the second rotatable element [15]. *See also, e.g.*, LCF002474 (describing how the "One-Way Clutch Bearing (i.e., the Safety Device)" in combination with the "Front Shaft" [support element 16] allows the "Front Roller Subassembly" to rotate around the "Front Shaft" [i.e., the shaft internal to shaft 4] in only one direction."), and LCF001867 ("The belt moves freely in only one direction."). However, in a second direction of rotation, opposite the first direction of rotation, "engagement … [occurs] according to the relative motion of the" first and second rotatable elements [14] and [15], *id.* at p. 5, to "prevent[] [a] reverse rotation," *id.* at p. 3, of the first rotatable element [14] and the	

Appendix B – Claim Chart for U.S. Patent No. 10,561,884 ("the '884 Patent")

the '884 Patent	Assault Fitness AirRunner ("the Infringing Product")	
	running belt [11] relative to the second rotatable element [15].	
38. The manually powered treadmill of claim 37, wherein the first and second rotatable elements of the safety device at least partly form a one-way bearing.	The "first and second rotatable elements of the safety device at least partly form a one-way bearing" is literally present in the Infringing Product. The safety device [13] includes an Altra Industrial Motion brand type CSK 25 PP. The CSK 25 PP has "both [an] inner and outer race," *see, e.g.*, Altra Industrial Motion, *Overrunning Clutches and Backstops* at p. 4 (2017), and is a "self-contained ball *bearing* unit[]," *id.* at p. 9 (emphasis added). Specifically, the safety device [13] is a CSK 25 PP "sprag type freewheel[] integrated into a 62 … series ball *bearing*[] ... ." *Id.* at p. 16 (emphasis added). The CSK 25 PP "allows rotation in one direction only ... . The freewheel prevents reverse rotation ... ." *Id.* at p. 3. As shown, the safety device [13] formed by the first rotatable element [14] and the second rotatable element [15] is a one-way bearing — that is it is "self-	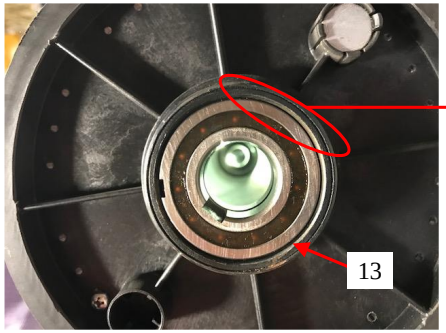 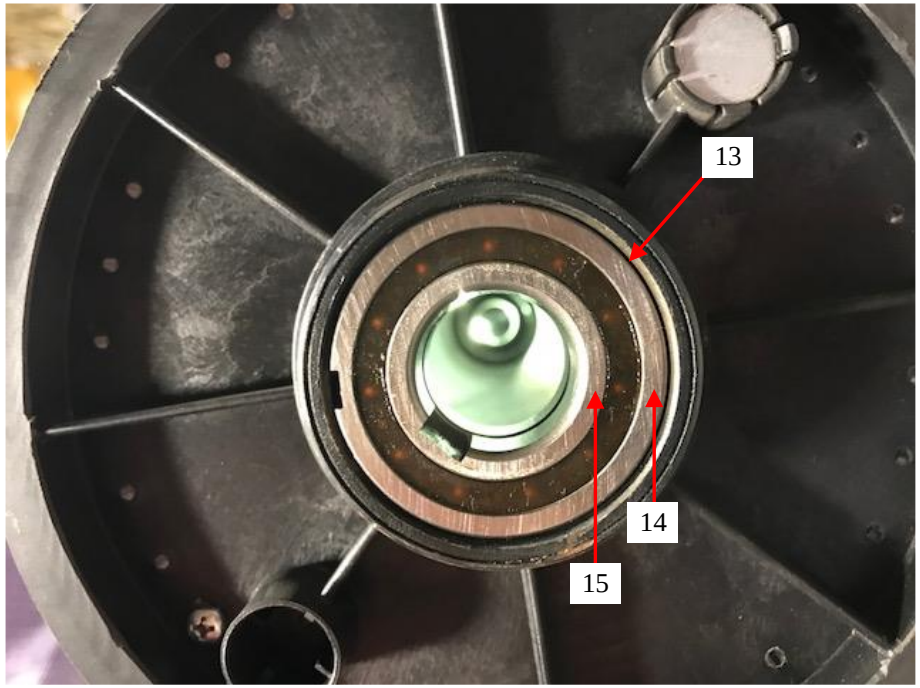

the '884 Patent	Assault Fitness AirRunner ("the Infringing Product")	
	contained ball *bearing* unit[]," *id*. at p. 9 (emphasis added), which "allows rotation in one direction only ... . The freewheel prevents reverse rotation ... ." *Id.* at p. 3. Thus, the safety device is a bearing that allows rotation in only one direction (*i.e*., a one-way bearing). *See also, e.g.,* LCF001767 (at row 75 "BEARING, ONE-WAY") and LCF002474 (describing the included One-Way Clutch Bearing as "i.e., the safety device").	

Appendix B – Claim Chart for U.S. Patent No. 10,561,884 ("the '884 Patent")

the '884 Patent	Assault Fitness AirRunner ("the Infringing Product")	
39. The manually powered treadmill of claim 37, wherein the front shaft assembly comprises a front shaft coupled to frame.	A front shaft assembly including "a front shaft coupled to the frame" is literally present in the Infringing Product. The Court adopted the plain and ordinary meaning of the term "shaft." As shown, a front shaft assembly [29] includes a "Front Shaft" [4] coupled to the frame [1]. As defined in the specification, and construed by the Court, "the term 'coupled' means the joining of two members directly or indirectly to one another … . Such joining may be achieved with the two members or the two members and any additional intermediate members." *See* '884 Patent at col. 32, ll. 22-27; Dkt. 59 at 8, n.1. Thus, coupling of the "Front Shaft" [4] to the frame [1] may be directly or indirectly through an intermediate member (*e.g.*, via the support element [16]). *See also, e.g.*, LCF001762 (illustrating the part no. 511* or "Front Roller Assembly" includes a shaft and is coupled to	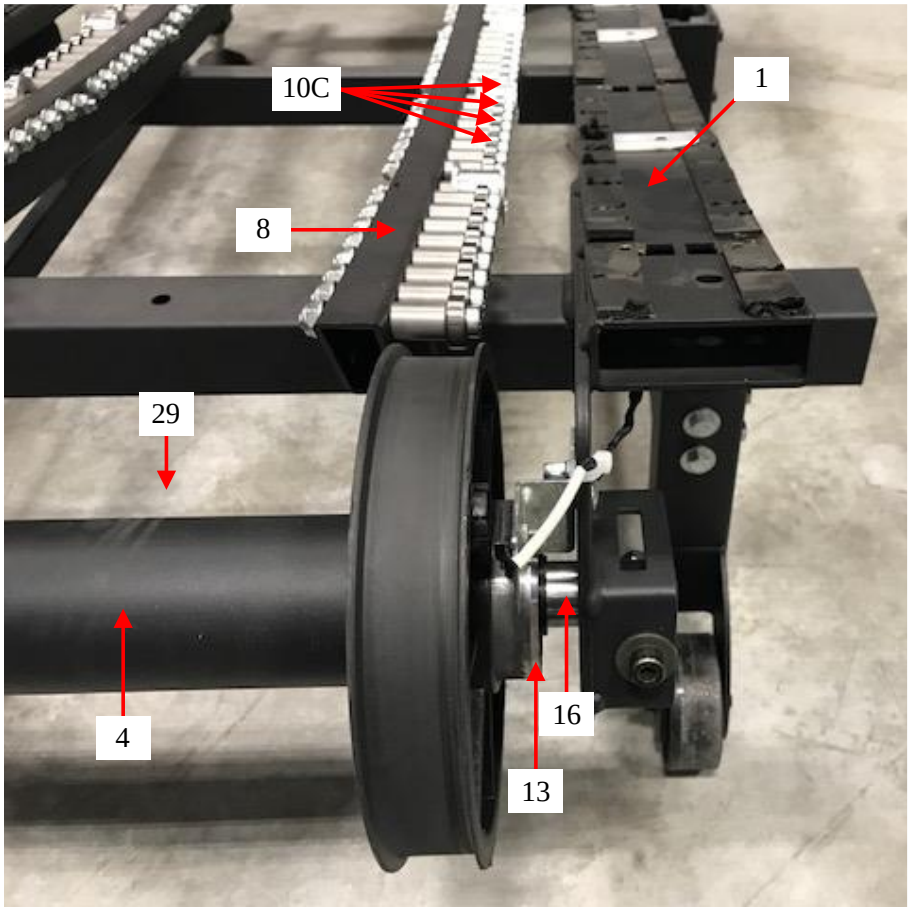

Appendix B – Claim Chart for U.S. Patent No. 10,561,884 ("the '884 Patent")

the '884 Patent	Assault Fitness AirRunner ("the Infringing Product")	
	501* the "Main Frame" by parts 539–541), and LCF002475 (illustrating the "Front Roller Subassembly" includes a "Front Roller Tube" [i.e., shaft 4]).	
40. The manually powered treadmill of claim 39, wherein the front shaft assembly comprises at least one front running belt pulley coupled to the front shaft.	A front shaft assembly including "at least one front running belt pulley coupled to the front shaft" is literally present in the Infringing Product. As shown, a front shaft assembly [29] includes a front running belt pulley [6] coupled to the "Front Shaft" [4]. *See also, e.g.,* LCF001762 (illustrating the part no. 511* or "Front Roller Assembly" includes a pulley coupled to the shaft of the "Front Roller Assembly"), and LCF002475 (illustrating the "Front Roller Subassembly" includes two pulleys coupled to the "Front Roller Tube" [i.e., shaft 4]).	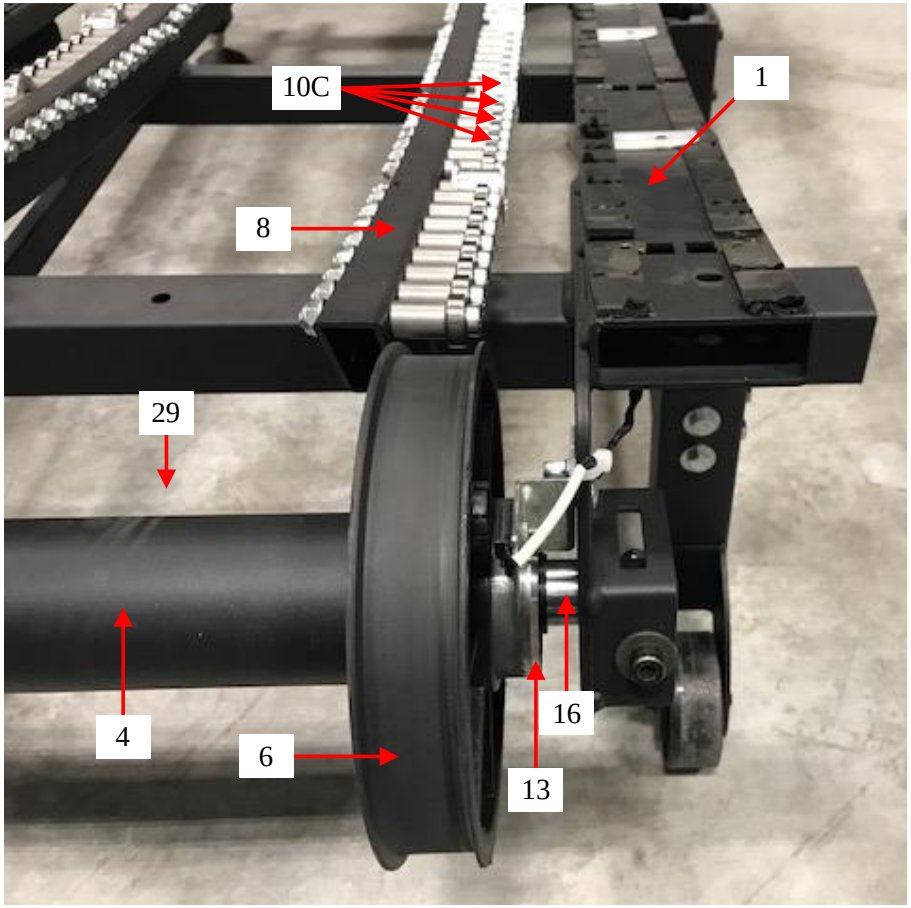

Appendix B – Claim Chart for U.S. Patent No. 10,561,884 ("the '884 Patent")

the '884 Patent	Assault Fitness AirRunner ("the Infringing Product")	
41. The manually powered treadmill of claim 37, wherein the rear shaft assembly comprises a rear shaft coupled to the frame.	A rear shaft assembly including "a rear shaft coupled to the frame" is literally present in the Infringing Product. The Court adopted the plain and ordinary meaning of the term "shaft." As shown, a rear shaft assembly [30] includes a rear shaft [5] coupled to the frame [1]. As defined in the specification, and construed by the Court, "the term 'coupled' means the joining of two members directly or indirectly to one another … . Such joining may be achieved with the two members or the two members and any additional intermediate members." *See* '884 Patent at col. 32, ll. 22-27; Dkt. 59 at 8, n.1. Thus, the rear shaft [5] is coupled to the frame [1] directly or indirectly through an intermediate member (*e.g.*, via the support element [17]). *See also, e.g.*, LCF000166 (illustrating part no. 512* "Rear Roller," and part no. 512-A "Rear Roller Assembly" which	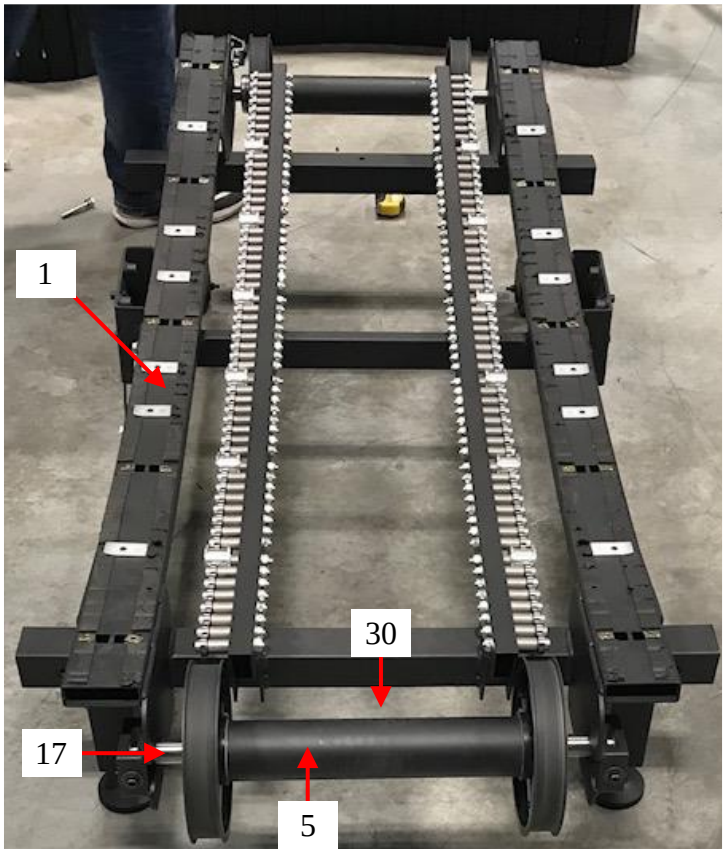

the '884 Patent	Assault Fitness AirRunner ("the Infringing Product")	
	corresponds to a rear shaft assembly coupled to the frame) and LCF002470 (titled "03c – Rear Roller Assembly.pdf" illustrating the "Rear Roller Assembly" includes a roller tube i.e., rear shaft [5] as part of the assembly).	
42. The manually powered treadmill of claim 41, wherein the rear shaft assembly comprises at least one rear running belt pulley coupled to the rear shaft.	A rear shaft assembly including "at least one rear running belt pulley coupled to the rear shaft" is literally present in the Infringing Product. As shown, a rear shaft assembly [30] includes a rear running belt pulley [7] coupled to the rear shaft [5]. *See also, e.g.,* LCF002470 (titled "03c – Rear Roller Assembly.pdf" illustrating the "Rear Roller Assembly" includes a roller tube i.e., rear shaft [5] coupled to two pulleys).	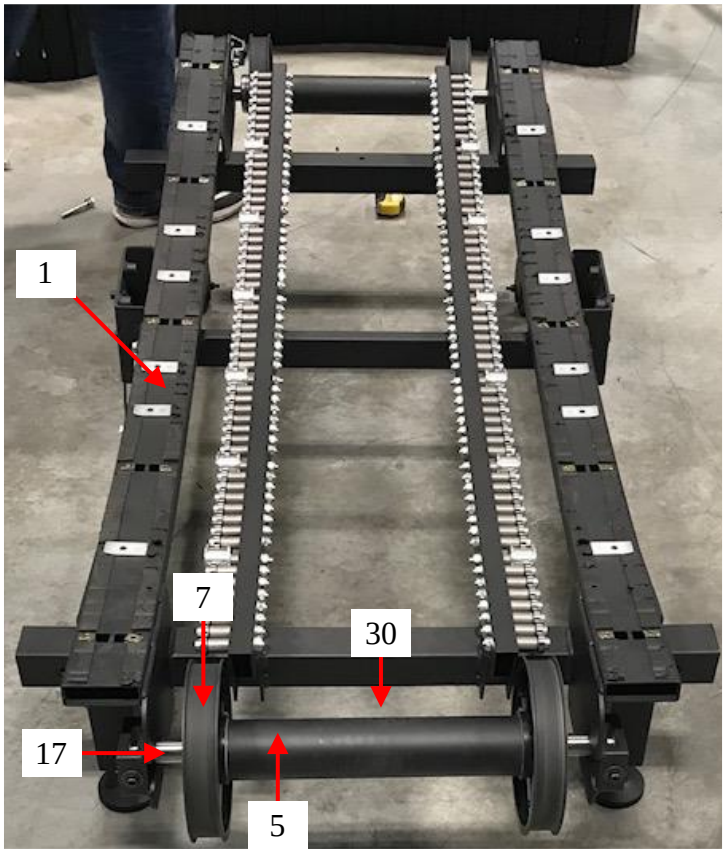

Appendix B – Claim Chart for U.S. Patent No. 10,561,884 ("the '884 Patent")

the '884 Patent	Assault Fitness AirRunner ("the Infringing Product")	
43. The manually powered treadmill of claim 37, wherein the rear shaft assembly comprises at least one rear running belt pulley and the front shaft assembly comprises at least one front running belt pulley.	A "rear shaft assembly" having "at least one rear running belt pulley" and a ""Front Shaft" assembly" having "at least one front running belt pulley" is literally present in the Infringing Product. As shown, the front shaft assembly [29] includes a front running belt pulley [6] and the rear shaft assembly [30] includes a rear running belt pulley [7]. *See also, e.g.,* LCF001762 (illustrating the part no. 511* or "Front Roller Assembly" includes a pulley coupled to the shaft of the "Front Roller Assembly" and 512* or "Rear Roller Assembly" includes a pulley coupled to the shaft of the "Rear Roller Assembly)," and LCF002475 (illustrating the analogous "Front Roller Subassembly" includes two pulleys coupled to the "Front Roller Tube" [i.e., shaft 4]).	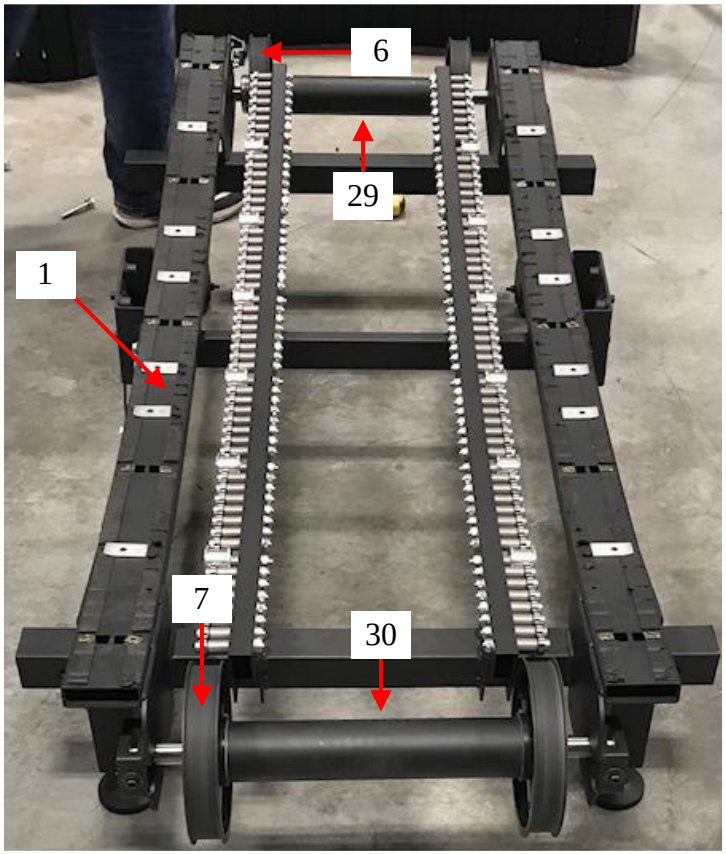

Appendix B – Claim Chart for U.S. Patent No. 10,561,884 ("the '884 Patent")

the '884 Patent	Assault Fitness AirRunner ("the Infringing Product")	
		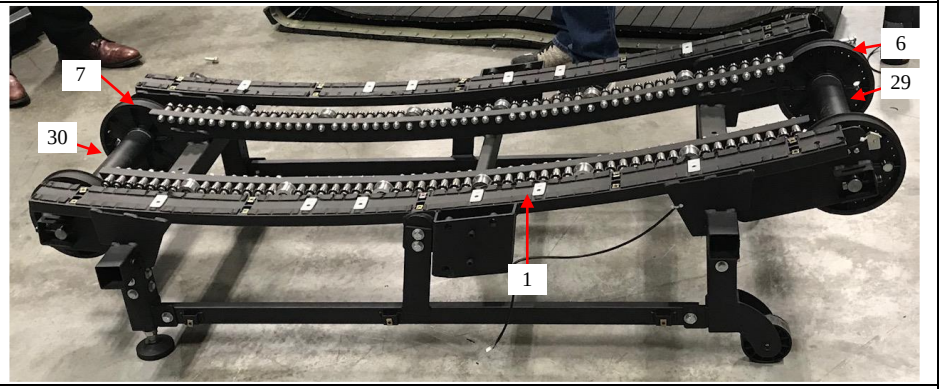
44. The manually powered treadmill of claim 43, wherein at least one of the at least one rear running belt pulley and the at least one front running belt pulley are formed from an electrically insulating material.	The manually powered treadmill having "at least one of the at least one rear running belt pulley and the at least one front running belt pulley" formed of an "electrically insulating material," is literally present in the Infringing Product. The rear running belt pulley [7] and the front running belt pulley [6] are formed of a "strong and chemical-resistant ABS." *See Assault AirRunner Manual Treadmill Technical Specifications and Use Guidelines* at p. 2. *See also, e.g.,* LCF001993 ("The AirRunner is manufactured of durable materials; the plastics are molded of strong and chemical resistant ABS"). ABS is a type of plastic. The '884 Patent	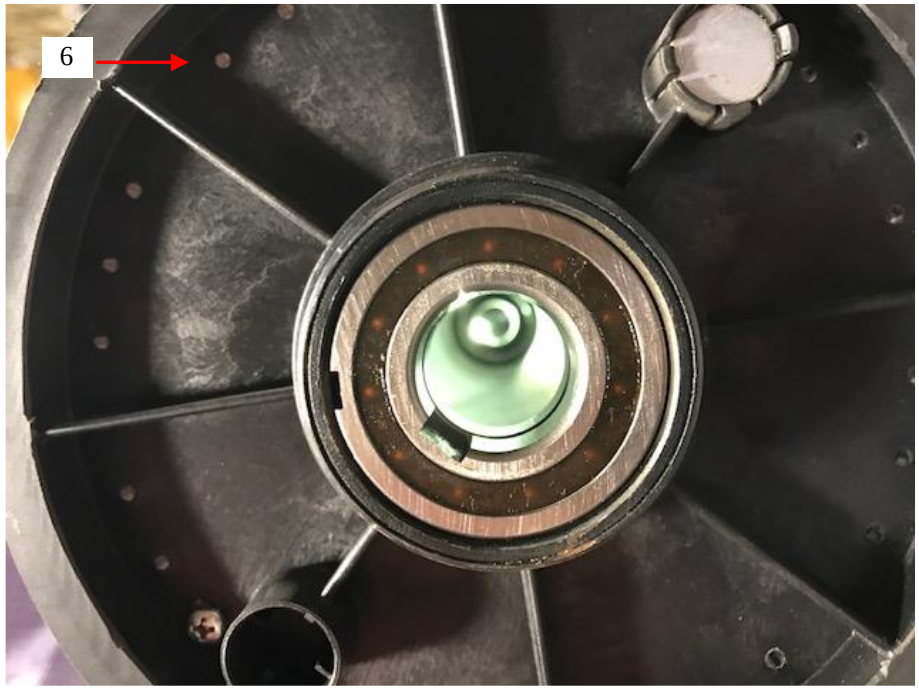

Appendix B – Claim Chart for U.S. Patent No. 10,561,884 ("the '884 Patent")

the '884 Patent	Assault Fitness AirRunner ("the Infringing Product")	
	discloses that plastic is an example of "electrically insulating material." *See* '884 Patent at col. 5, ll. 63-63. Therefore and as shown, the rear running belt pulley [7] and the front running belt pulley [6] are formed from an "electrically insulating material." While only the front running belt pulley [6] is seen in this photograph, the structure of the rear running belt pulley [7] is identical.	

Appendix B – Claim Chart for U.S. Patent No. 10,561,884 ("the '884 Patent")

the '884 Patent	Assault Fitness AirRunner ("the Infringing Product")	
45. The manually powered treadmill of claim 37, further comprising at least one support foot coupled to the frame, wherein the at least one support foot is adjustable to enable an adjustment of the relative vertical incline of at least a portion of the manually powered treadmill in relation to a surface supporting the manually powered treadmill.	The manually powered treadmill having "at least one support foot coupled to the frame" that is "adjustable to enable an adjustment of the relative vertical incline of at least a portion of the manually powered treadmill in relation to a surface supporting the manually powered treadmill" is literally present in the Infringing Product. As shown, support foot [27A] are coupled to the frame [1] using a threaded rod [28]. The rod [28] support foot [27A] vertically adjustable through rotation of the threaded rod [28] resulting in movement towards or away from the frame [1] to adjust the relative vertical incline of the treadmill relative to the support surface. *See also, e.g.,* LCF000166 (part nos. 557* "Leveling Foot" and 557-A "Leveling Foot Assembly"), and LCF000168 (under "Assembly Step Seven" "[e]nsure the unit is level and does not rock by adjusting the Stabilizer Leveling Feet").	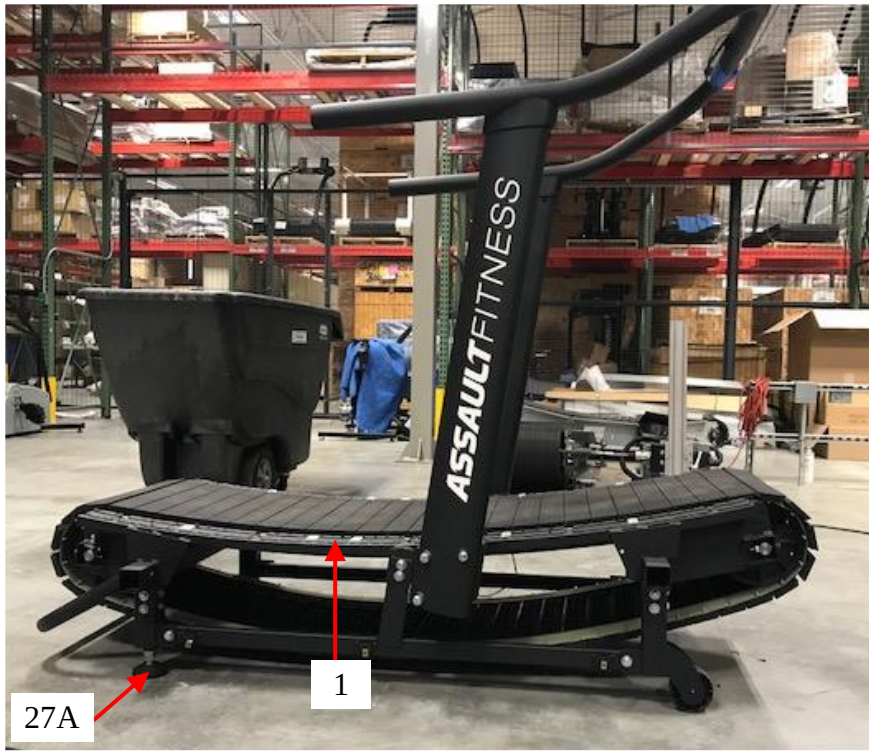 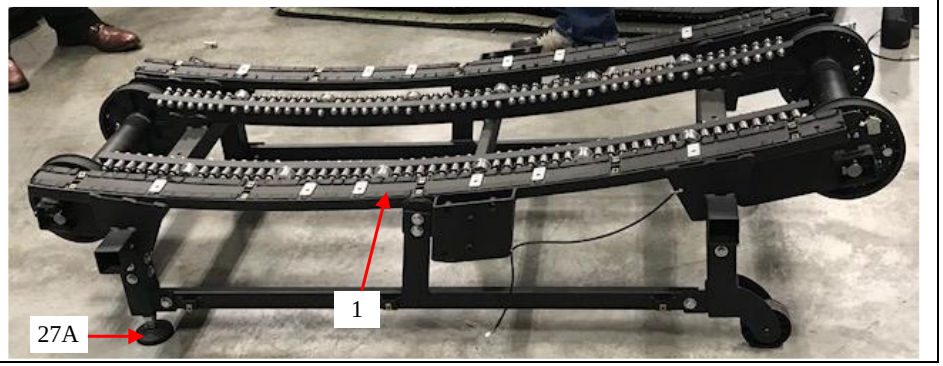

Appendix B – Claim Chart for U.S. Patent No. 10,561,884 ("the '884 Patent")

the '884 Patent	Assault Fitness AirRunner ("the Infringing Product")	
		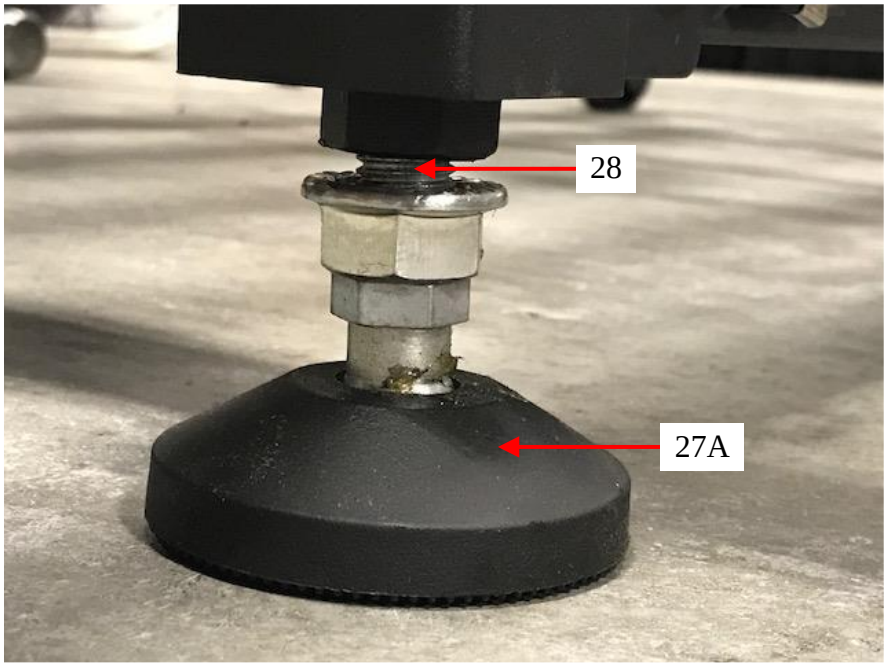

Appendix B – Claim Chart for U.S. Patent No. 10,561,884 ("the '884 Patent")

the '884 Patent	Assault Fitness AirRunner ("the Infringing Product")	
46. The manually powered treadmill of claim 37, wherein the running belt is at least partially supported by the first plurality of bearings and the second plurality of bearings.	A "running belt" partially supported by "the first plurality of bearings and the second plurality of bearings" is literally present in the Infringing Product. As shown, the running belt [11] is at least partially supported by the first plurality of bearings [10C] and the second plurality of bearings [10D]. *See also, e.g.,* LCF002471 (describing the "Belt Assembly is then lowered onto the front and rear roller pulleys, side support bearings, and guide pulleys," and that "the top portion of the belt rests upon the supporting bearings and guide pulleys").	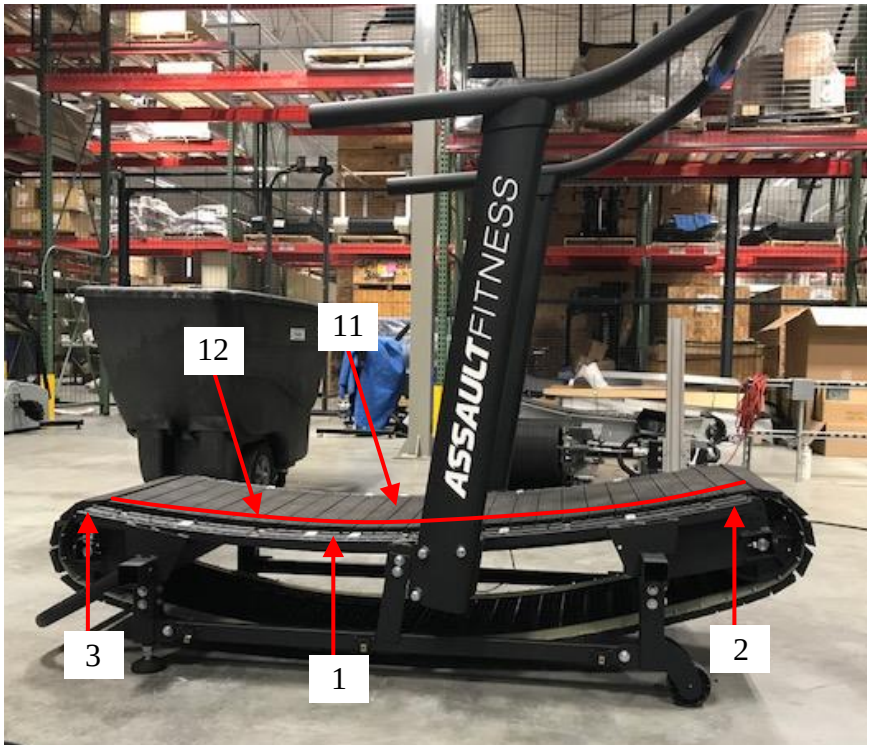 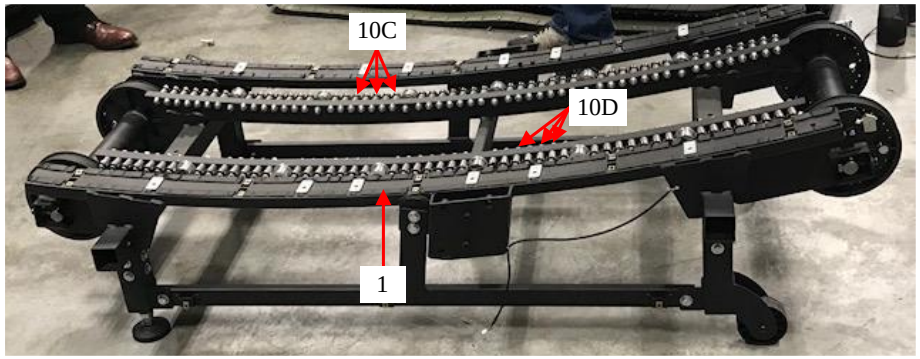

Appendix B – Claim Chart for U.S. Patent No. 10,561,884 ("the '884 Patent")

the '884 Patent	Assault Fitness AirRunner ("the Infringing Product")	
		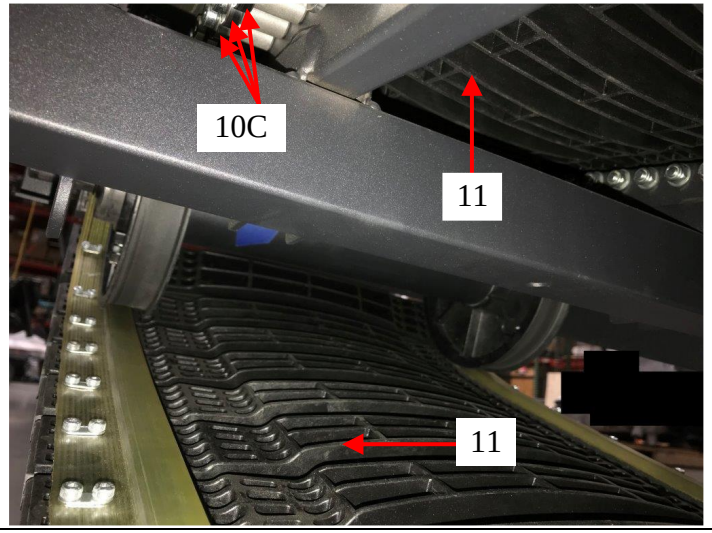

Appendix B – Claim Chart for U.S. Patent No. 10,561,884 ("the '884 Patent")

the '884 Patent	Assault Fitness AirRunner ("the Infringing Product")	
47. The manually powered treadmill of claim 46, wherein each of the first and second pluralities of bearings define a curved top profile and wherein the curved top profile substantially corresponds to at least a portion of the curved portion of the running surface.	Each of the "first and second plurality of bearings" defining "a curved top profile" where "the curved top profile substantially corresponds to at least a portion of the curved portion of the running surface" is literally present in the Infringing Product. As shown, the first plurality of bearings [10C] and the second plurality of bearings [10D] define a curved top profile [21] which substantially corresponds to at least a portion of the curved running surface [12]. *See also, e.g.,* LCF000895 (under Low Impact describing the treadmill as "The contoured design…"), LCF02133 (under "Belt Design" described as "Contoured"), and LCF002471 (describing the "Belt Assembly is then lowered onto the front and rear roller pulleys, side support bearings, and guide pulleys," and that "the top portion of the belt rests upon the supporting bearings and guide pulleys").	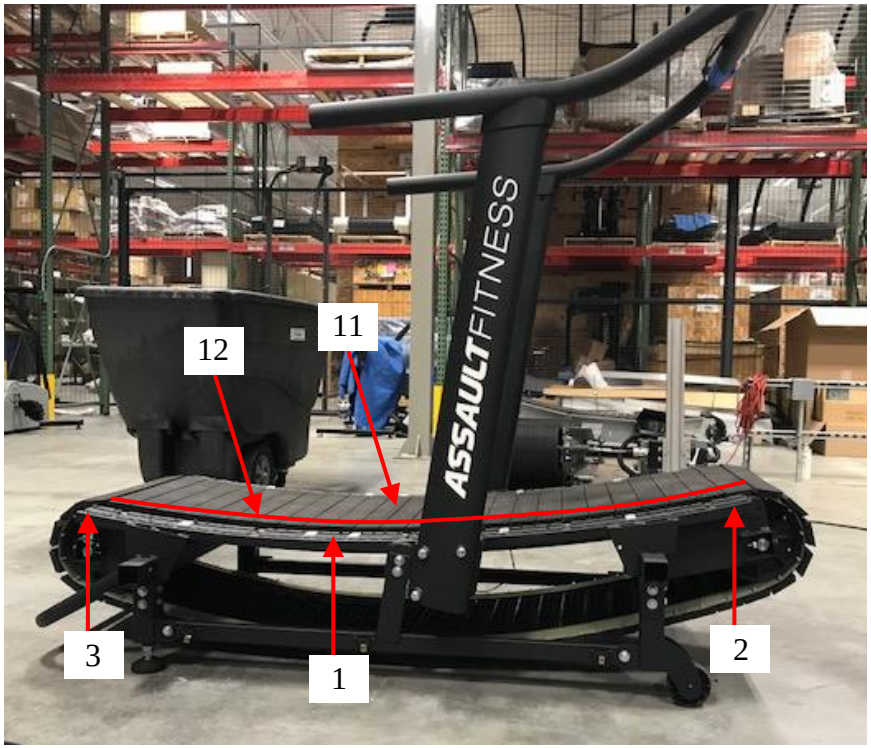 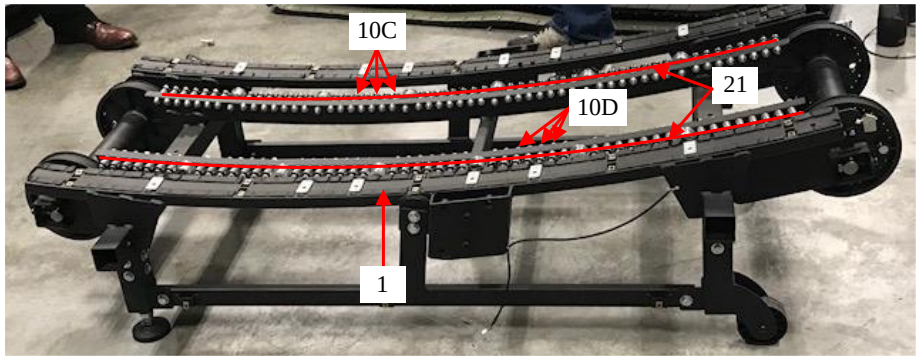

Appendix B – Claim Chart for U.S. Patent No. 10,561,884 ("the '884 Patent")

the '884 Patent	Assault Fitness AirRunner ("the Infringing Product")	
48. The manually powered treadmill of claim 37, wherein the frame includes a left side member, a right side member spaced a distance from the left side member, and at least one cross-member extending between the left side member and the right side member.	A frame having a "left side member" and "a right side member spaced a distance from the left side member, and at least one cross-member extending between the left side member and the right side member" is literally present in the Infringing Product. As shown, the frame [1] includes the left side member [18] and a right side member [19] which is spaced apart from the left side member [18]. As also shown, cross-members [20] extend between the left side member [18] and the right side member [19]. *See also, e.g.*, LCF002465 (titled "01 – Base Frame (Welded Together).pdf" illustrating the base frame including left side and right side members, and least one cross member extending between the left and right side members).	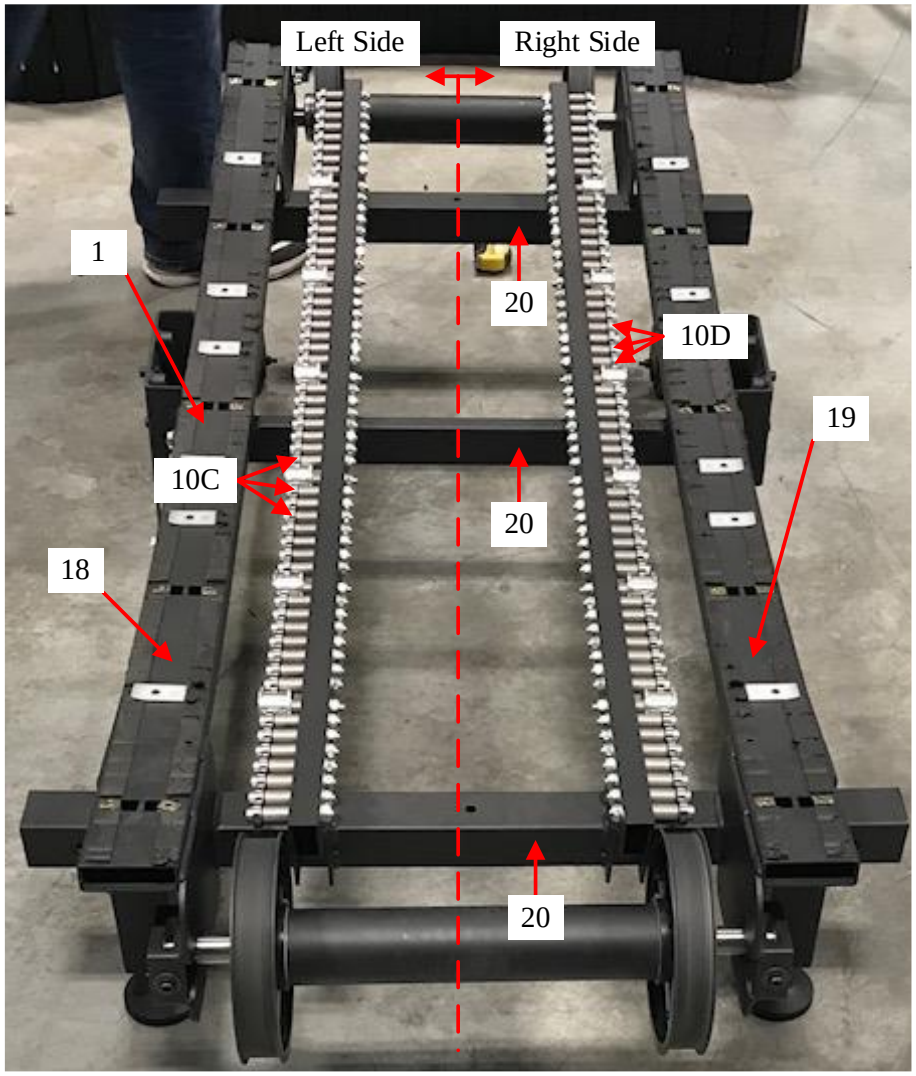

Appendix B – Claim Chart for U.S. Patent No. 10,561,884 ("the '884 Patent")

the '884 Patent	Assault Fitness AirRunner ("the Infringing Product")	
49. The manually powered treadmill of claim 48, wherein the first plurality of bearings are coupled the left side member and the second plurality of bearings are coupled to the right side member.	A "first plurality of bearings" "coupled [to] the left side member" and "the second plurality of bearings" "coupled to the right side member" is literally present in the Infringing Product. As shown, the first plurality of bearings [10C] are coupled to the left side member [18] and the second plurality of bearings [10D] are coupled to the right side member [19]. As defined in the specification, and construed by the Court, "the term 'coupled' means the joining of two members directly or indirectly to one another. Such joining may be stationary or moveable in nature … . Such joining may be achieved with the two members or the two members and any additional intermediate members." *See* '884 Patent at col. 32, ll. 22-27; Dkt. 59 at 8, n.1. Thus, the first plurality of bearings [10C] are coupled to the left side member [18] and the second plurality of bearings [10D] are coupled to the right side member and the connection	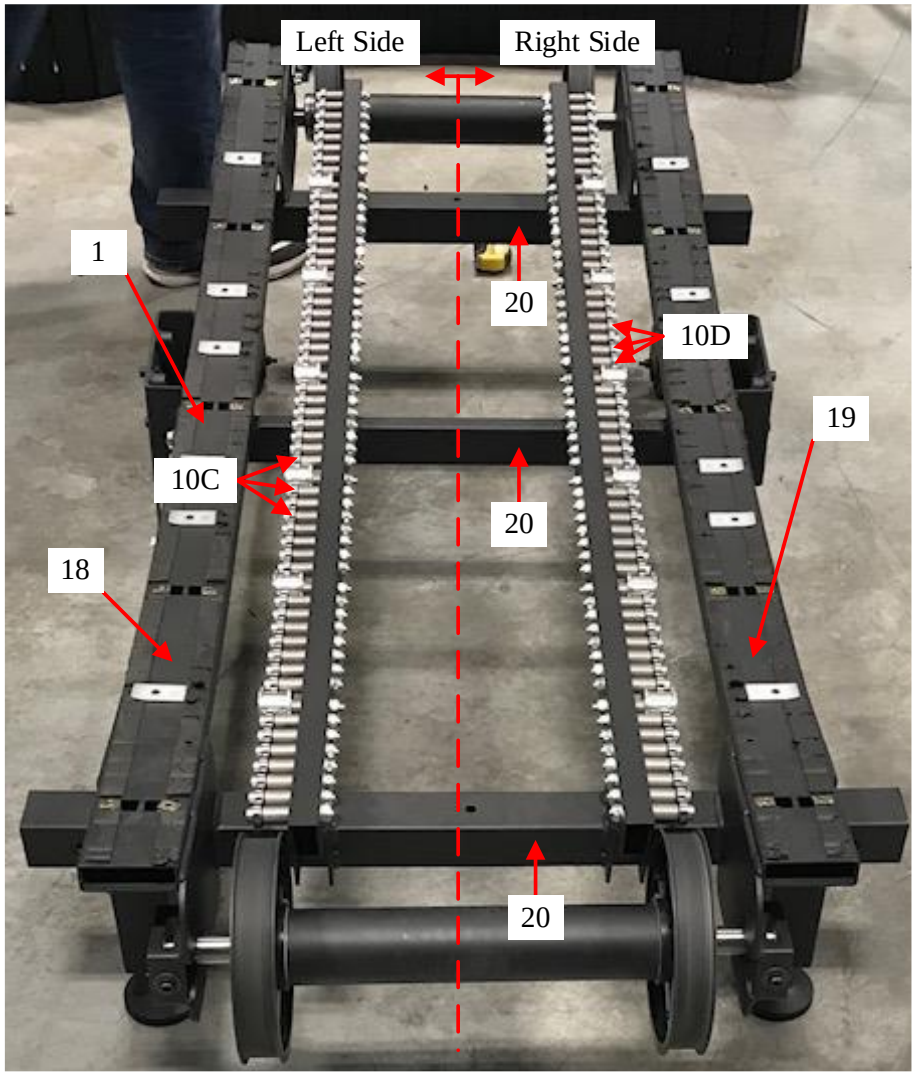

the '884 Patent	Assault Fitness AirRunner ("the Infringing Product")	
	may be directly or indirectly through one or more intermediate members. Therefore and as shown, the first plurality of bearings [10C] are coupled to the left side member [18] and the second plurality of bearings [10D] are coupled to the right side member [19]. *See also, e.g.,* LCF002467 (titled "03 – Base Frame with Bearings – Guide Pulleys – Rollers.pdf" showing a first plurality of bearing rails coupled to the left side and a second plurality of bearings coupled to the right side members).	

Appendix B – Claim Chart for U.S. Patent No. 10,561,884 ("the '884 Patent")

the '884 Patent	Assault Fitness AirRunner ("the Infringing Product")	
50. A manually powered treadmill, comprising:	A "manually powered treadmill" is literally the infringing product. The pictured Assault Fitness AirRunner is described in the Assault AirRunner Marketing Brochure, as a "completely manual [treadmill], with no electrical consumption." *See, e.g., AirRunner The Premier Elite Fitness Running Machine* Brochure at p. 2 (2017). *See also, e.g.,* LCF000017 ("The Assault AirRunner completely redefines the manual treadmill…"), LCF000678 (labeling the treadmill as a "Manual Treadmill"), LCF001832 (model described as "AirRunner Manual Treadmill"), LCF001866 (the "Assault AirRunner Warning Label" states "This treadmill is manually operated.").	

Appendix B – Claim Chart for U.S. Patent No. 10,561,884 ("the '884 Patent")

the '884 Patent	Assault Fitness AirRunner ("the Infringing Product")	
a frame;	A "frame" is literally present in the Infringing Product. As shown, the manually powered treadmill includes a frame [1]. *See also, e.g.,* LCF001762 (identifying part no. 501 as "Main Frame"), LCF001764 (identifying part no. 501 as "Main Frame")), LCF001766 (identifying part no. 501 as "Main Frame"), LCF002465 (titled "01 – Base Frame (Welded Together).pdf").	

Appendix B – Claim Chart for U.S. Patent No. 10,561,884 ("the '884 Patent")

the '884 Patent	Assault Fitness AirRunner ("the Infringing Product")	
at least one front running belt pulley coupled to the frame;	A "front running belt pulley coupled to the frame" is literally present in the Infringing Product. As shown, at least one front running belt pulley [6] is coupled to the frame [1]. As defined in the specification, and construed by the Court, "the term 'coupled' means the joining of two members directly or indirectly to one another … . Such joining may be achieved with the two members or the two members and any additional intermediate members." *See* '884 Patent at col. 32, ll. 22-27; Dkt. 59 at 8, n.1. Thus, the front running belt pulley [6] may be coupled to the frame [1] directly or indirectly through an intermediate member (*e.g.*, via support element [16]). *See also, e.g.*, LCF000166 (identifies part no. 511-A "Front Roller Assembly" which includes at least one front running belt pulley), LCF001767 (listing the "Pulley, Roller" as a part in the bill of materials), and LCF002475 (identifying the	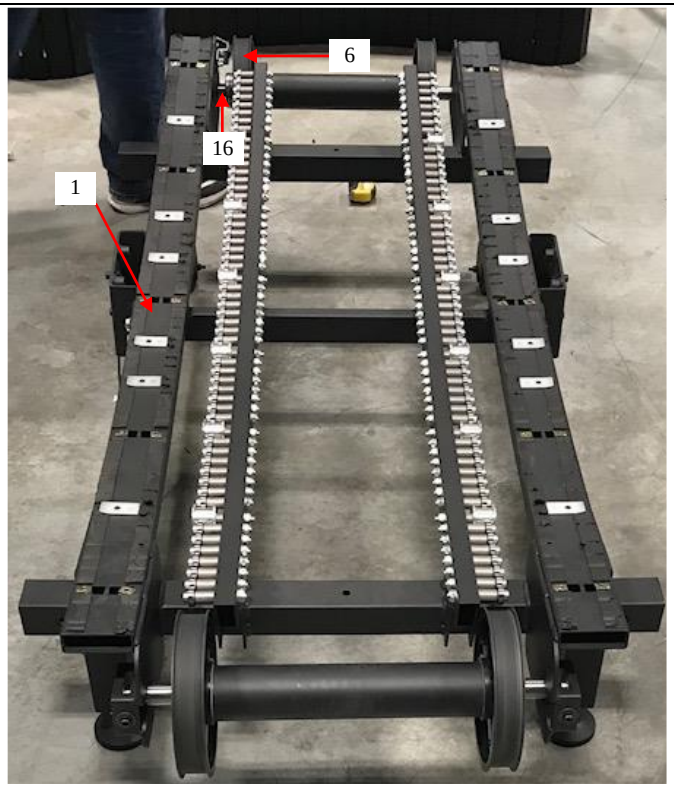 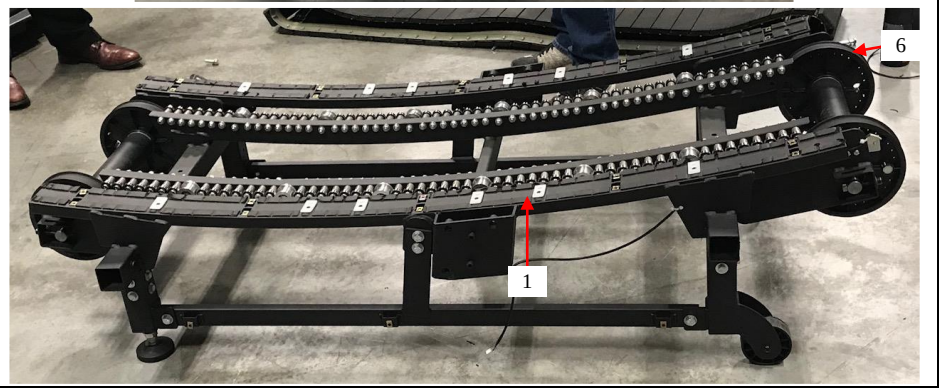

Appendix B – Claim Chart for U.S. Patent No. 10,561,884 ("the '884 Patent")

the '884 Patent	Assault Fitness AirRunner ("the Infringing Product")	
	pulleys as part of the "Front Roller Subassembly").	
at least one rear running belt pulley coupled to the frame and spaced a distance from the at least one front running belt pulley;	A "rear running belt pulley coupled to the frame" and "spaced a distance from the at least one front running belt pulley" is literally present in the Infringing Product. As shown, at least one rear running belt pulley [7] is coupled to the frame [1]. As defined in the specification, and construed by the Court, "the term 'coupled' means the joining of two members directly or indirectly to one another … . Such joining may be achieved with the two members or the two members and any additional intermediate members." *See* '884 Patent at col. 32, ll. 22-27; Dkt. 59 at 8, n.1. Thus, the rear running belt pulley [7] may be coupled to the frame [1] directly or indirectly through an intermediate member (*e.g.*, via support element [17]). As also shown, the rear running belt pulley [7] is spaced a	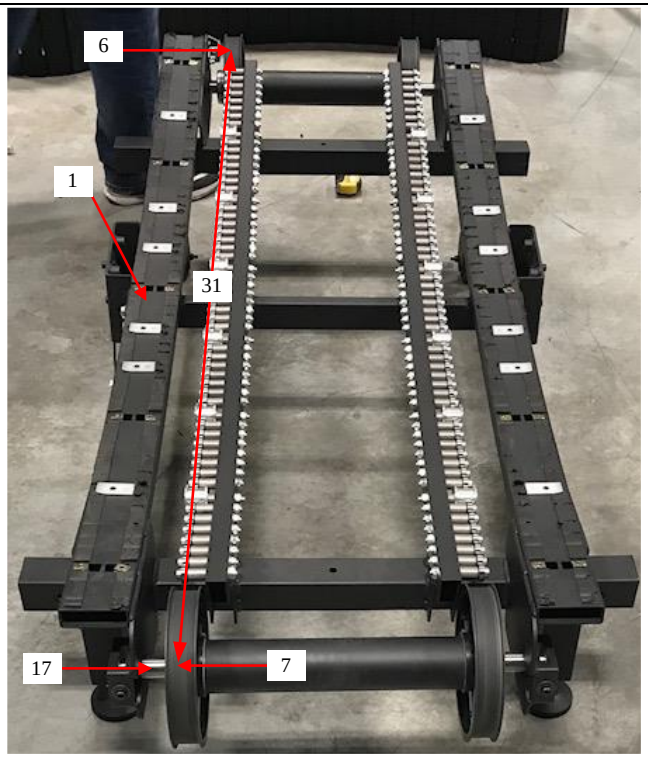

Appendix B – Claim Chart for U.S. Patent No. 10,561,884 ("the '884 Patent")

the '884 Patent	Assault Fitness AirRunner ("the Infringing Product")	
	distance [31] from the at least one front running belt pulley [6]. *See also, e.g.,* LCF000166 (identifies part no. 512-A "Rear Roller Assembly" which includes at least one rear running belt pulley), LCF001767 (listing the "Pulley, Roller" as a part in the bill of materials), and LCF002470 (identifying a pulley as part of the "Rear Roller Subassembly").	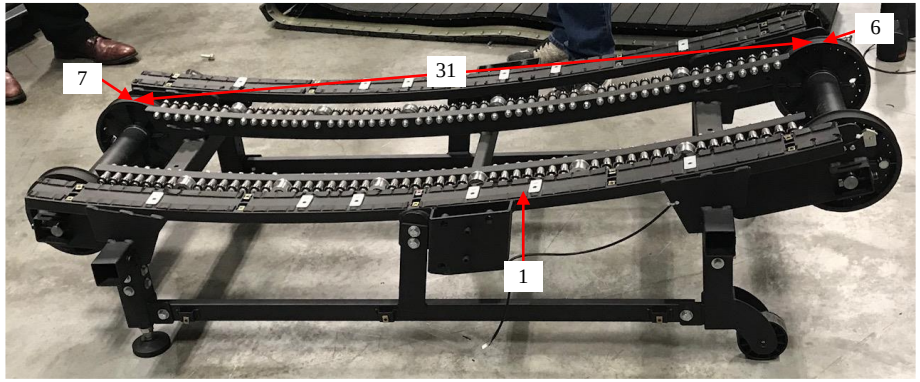

Appendix B – Claim Chart for U.S. Patent No. 10,561,884 ("the '884 Patent")

the '884 Patent	Assault Fitness AirRunner ("the Infringing Product")	
a plurality of bearings coupled to the frame;	A "plurality of bearings coupled to the frame" is literally present in the Infringing Product. As shown, a plurality of bearings [10] are coupled to the frame [1]. As defined in the specification, and construed by the Court, "the term 'coupled' means the joining of two members directly or indirectly to one another. Such joining may be stationary or moveable in nature…Such joining may be achieved with the two members or the two members and any additional intermediate members." *See* '884 Patent at col. 32, ll. 22-27; Dkt. 59 at 8, n.1. Thus, the plurality of bearings [10] are coupled to the frame [1] directly or indirectly through an intermediate member. Therefore and as shown, the plurality of bearings [10] is coupled to the frame [1]. *See also, e.g.*, LCF000166 (identifying part nos. 545* "Belt Support Bearing" and 545-A "Belt Support Bearing Assembly" which correspond to a plurality of bearings [10]),	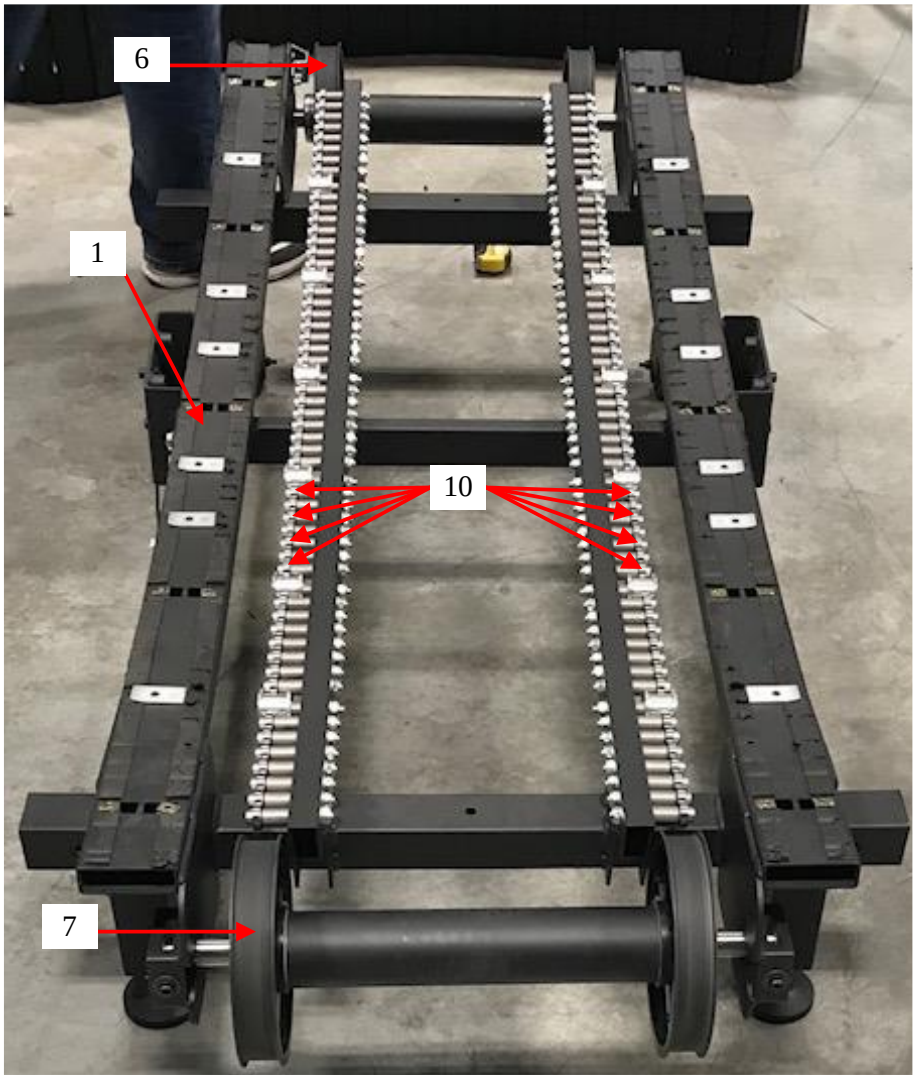

Appendix B – Claim Chart for U.S. Patent No. 10,561,884 (“the ’884 Patent”)

the ’884 Patent	Assault Fitness AirRunner (“the Infringing Product”)	
	LCF001993 (under “Specifications” “Running Belt Support: 12 Guide Pulleys; 100 Cartridge Bearings”), LCF002133 (under “Components” “Drive System” listed “100 Precision Ball Bearings w/ 12 Roller Guides”), LCF002467 (titled “03 – Base Frame with Bearings – Guide Pulleys – Rollers.pdf” showing a plurality of bearings coupled to the frame).	

Appendix B – Claim Chart for U.S. Patent No. 10,561,884 ("the '884 Patent")

the '884 Patent	Assault Fitness AirRunner ("the Infringing Product")	
a running belt at least partially supported by the plurality of bearings and at least partially supported by at least one of the at least one front running belt pulley and the at least one rear running belt pulley, wherein the running belt includes a running surface, at least a portion which is curved;	A "running belt" at least partially supported by "the plurality of bearings and at least partially supported by at least one of the at least one front running belt pulley and the at least one rear running belt pulley" where "the running belt includes a running surface, at least a portion which is curved," is literally present in the Infringing Product. As shown, the running belt [11] is at least partially supported by the plurality of bearings [10] and at least one of the at least one front running belt pulley [6] and the at least one rear running belt pulley [7]. The third photograph depicts only the front running belt pulley [6] supporting the running belt [11] and the same configuration is provided for the rear running belt pulley [7] and the running belt [11]. The running belt [11] includes a curved running surface [12]. *See also, e.g.,* LCF000895 (under "Low Impact" describing the treadmill belt as "The contoured design…"), LCF02133 (under "Belt Design"	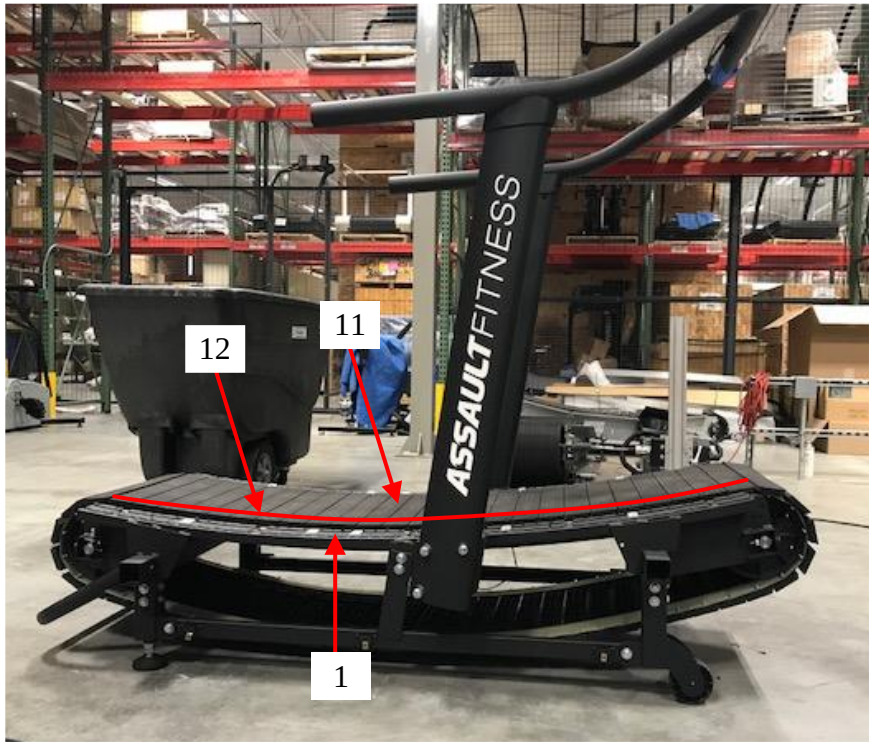 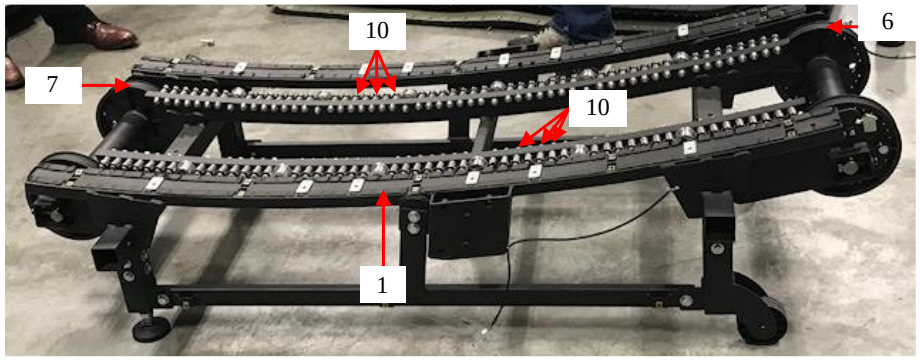

the '884 Patent	Assault Fitness AirRunner ("the Infringing Product")	
	describing the belt as "Contoured"), and LCF002471 (instructing the "Belt Assembly is then lowered onto the front and rear roller pulleys, side support bearings, and guide pulleys," and that "the top portion of the belt rests upon the supporting bearings and guide pulleys").	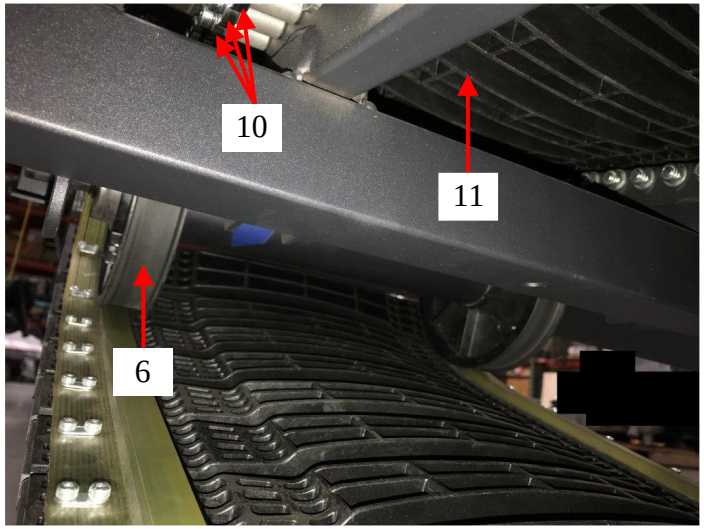 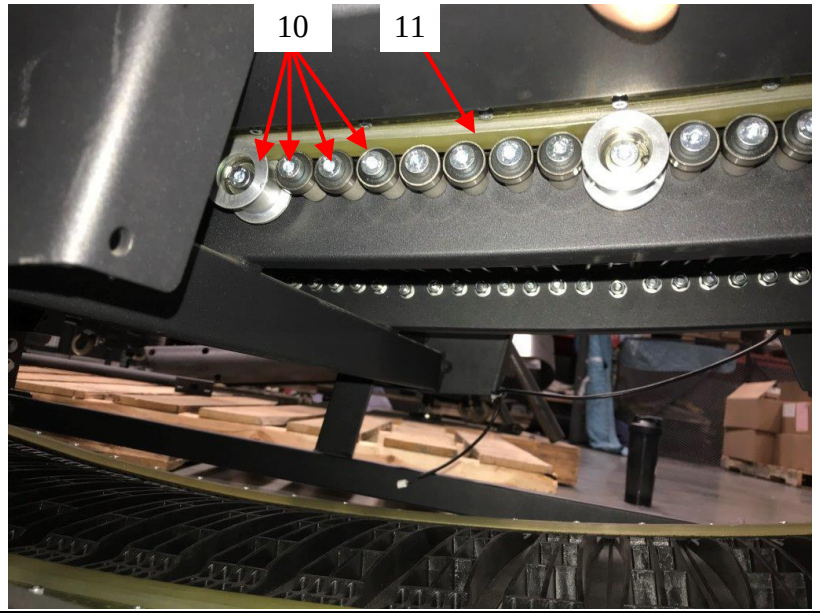

Appendix B – Claim Chart for U.S. Patent No. 10,561,884 ("the '884 Patent")

the '884 Patent	Assault Fitness AirRunner ("the Infringing Product")	
a safety device coupled to the frame and the running belt, the safety device having a first rotatable element and a second rotatable element, wherein at least one of the first and second rotatable elements are adapted for rotation relative to the frame;	A "safety device coupled to the frame and the running belt" having "a first rotatable element and a second rotatable element," where "at least one of the first and second rotatable elements are adapted for rotation relative to the frame" is literally present in the Infringing Product. The Court construed the term "safety device" as "a device that includes the elements recited and restricts rotation to allow for only one rotational direction of movement." *See* Dkt. 59 at 23. As shown, a safety device [13] is coupled to the frame [1] and the running belt [11]. As defined in the specification, and construed by the Court, "the term 'coupled' means the joining of two members directly or indirectly to one another. Such joining may be stationary or moveable in nature … . Such joining may be achieved with the two members or the two members and any additional intermediate members." *See* '884 Patent at col. 32, ll. 22-27; Dkt. 59 at 8, n.1.	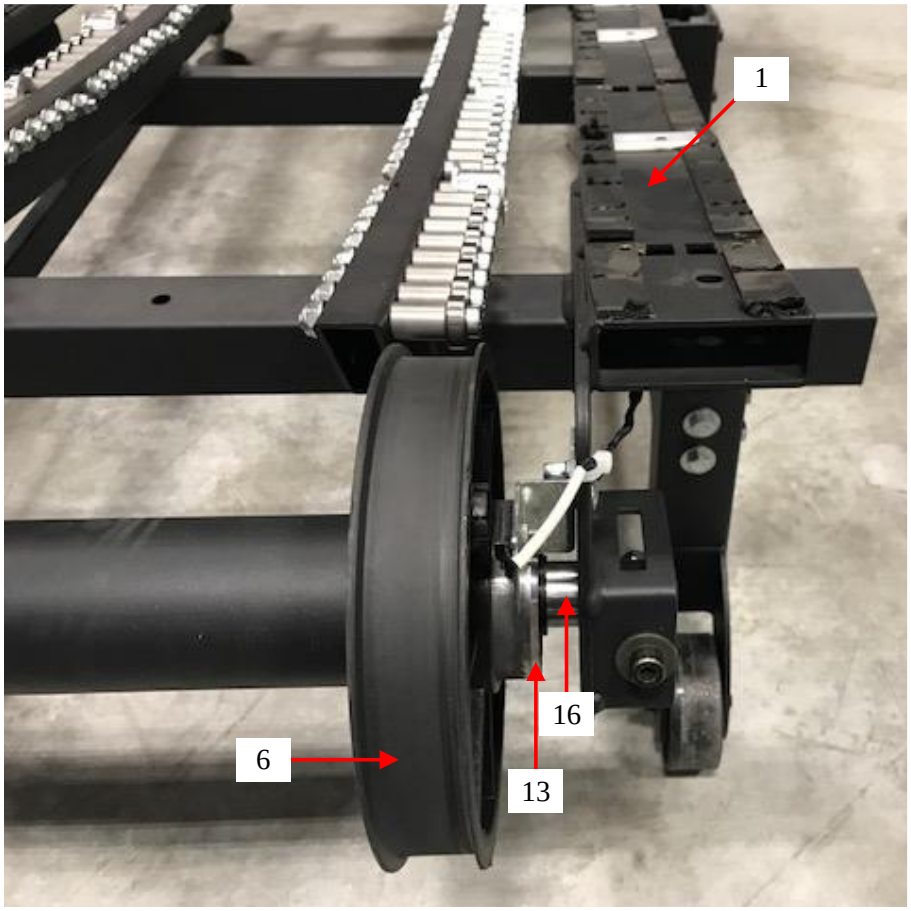

Appendix B – Claim Chart for U.S. Patent No. 10,561,884 ("the '884 Patent")

the '884 Patent	Assault Fitness AirRunner ("the Infringing Product")	
	Thus, the safety device [13] may be coupled to the frame [1] and the running belt [11] directly or indirectly through an intermediate member (*e.g.*, coupled to the frame [1] via support element [16] and to the running belt [11] via the front running belt pulley [6]). The safety device [13] includes a one-way bearing assembly. *See* LCF001767 (at row 75 "BEARING, ONE-WAY") and LCF002474 (describing the included One-Way Clutch Bearing as "i.e., the safety device"). Specifically, the safety device [13] includes an Altra Industrial Motion brand Combined Bearing/Freewheel type CSK 25 PP "sprag type freewheel[]." *See, e.g.*, Altra Industrial Motion, *Overrunning Clutches and Backstops* at p. 16 (2017). The CSK 25 PP has "both [an] inner and outer race." *Id.* at p. 4. The safety device [13] includes a first rotatable element [14] (*i.e.*, the "outer race") and a second rotatable element [15] (*i.e.*, the "inner race") rotatable relative to one another. "At least one of the	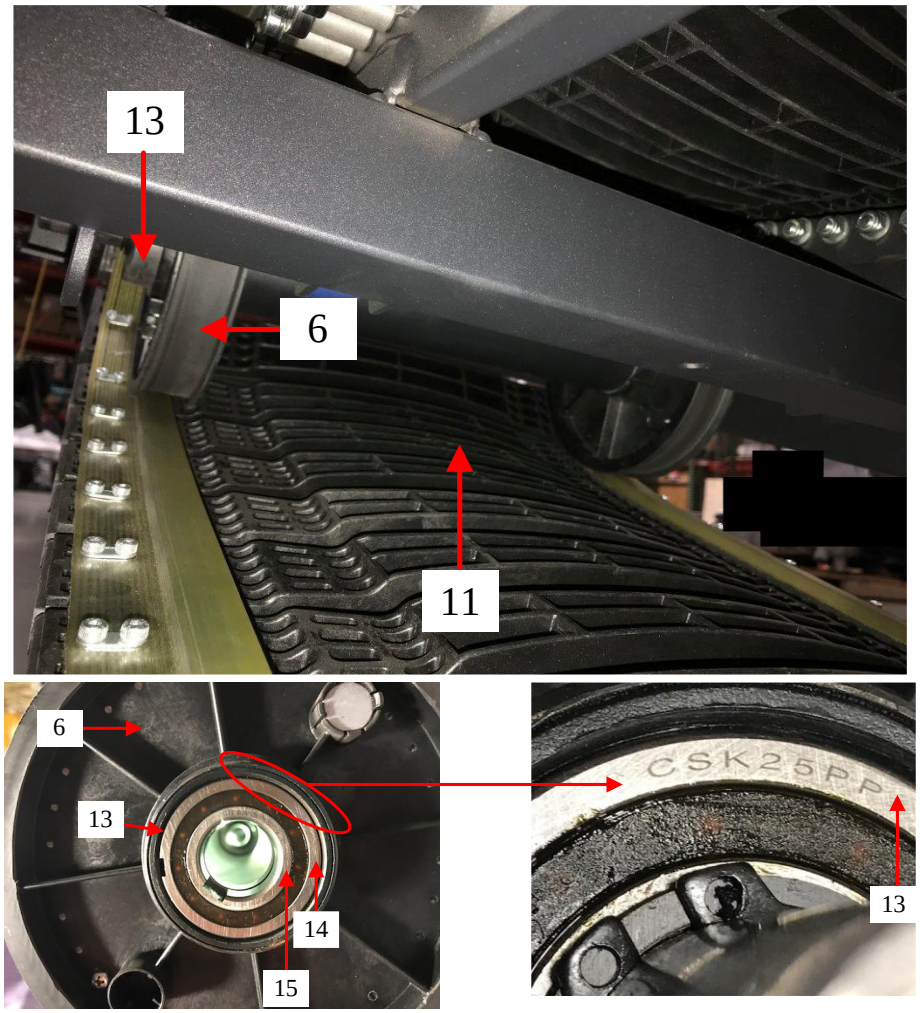

the '884 Patent	Assault Fitness AirRunner ("the Infringing Product")	
	first and second rotatable elements [that] are adapted for rotation relative to the frame" can mean that (i) only the first rotatable element is adapted for rotation relative to the frame; (ii) only the second rotatable element is adapted for rotation relative to the frame; or (iii) both of the first and second rotatable elements are adapted for rotation relative to the frame. In this configuration, the first rotatable element [14] is "adapted for rotation relative to the frame." The safety device [13] thus "restricts rotation to allow for only one rotational direction of movement." *See* LCF002474 (describing how the "One-Way Clutch Bearing (i.e., the Safety Device)" in combination with the "Front Shaft" [support element 16] allows the "Front Roller Subassembly" to rotate around the "Front Shaft" [i.e., the shaft internal to shaft 4] in only one direction.").	

Appendix B – Claim Chart for U.S. Patent No. 10,561,884 ("the '884 Patent")

the '884 Patent	Assault Fitness AirRunner ("the Infringing Product")	
wherein one of the first and second rotatable elements of the safety device and the running belt freely rotate in a first direction of rotation relative to the frame, however, in a second direction of rotation, opposite the first direction of rotation, interference between the safety device and at least one of the first rotatable element and the second rotatable element substantially prevents rotation of the one of the first and second rotatable elements of the safety device and the running belt relative to the frame.	"[O]ne of the first and second rotatable elements of the safety device and the running belt freely rotate in a first direction of rotation relative to the frame" but "in a second direction of rotation, opposite the first direction of rotation, interference between the safety device and at least one of the first rotatable element and the second rotatable element substantially prevents rotation of the one of the first and second rotatable elements of the safety device and the running belt relative to the frame" is literally present in the Infringing Product. The Court construed the term "safety device" as "a device that includes the elements recited and restricts rotation to allow for only one rotational direction of movement." *See* Dkt. 59 at 23. The safety device [13] includes an Altra Industrial Motion brand Combined Bearing/Freewheel type CSK 25 PP "sprag type freewheel[]." *See, e.g.*, Altra Industrial Motion, *Overrunning Clutches and Backstops* at p. 16 (2017). The CSK 25 PP has "both [an] inner and outer race,"	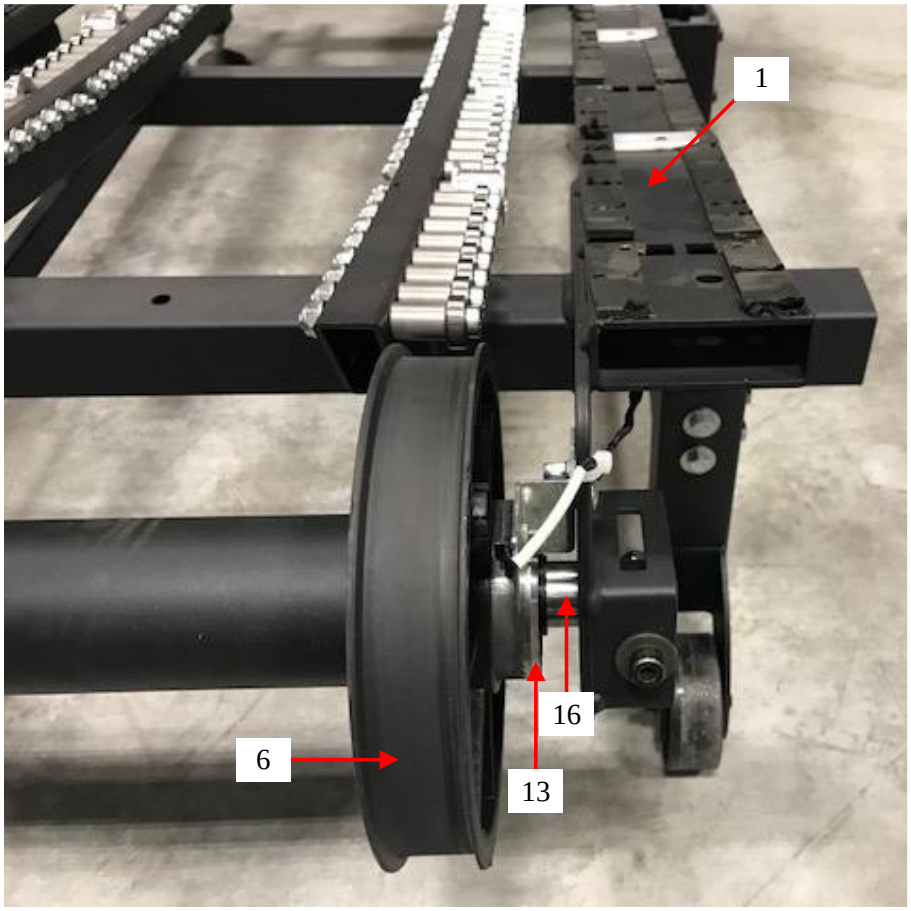

the '884 Patent	Assault Fitness AirRunner ("the Infringing Product")	
	and "locking elements are positioned between [the] outer and [the] inner race which effect engaging and disengaging." *Id.* at p. 4. As such, the CSK 25 PP "allows rotation in one direction only ... . The freewheel prevents reverse rotation if the drive is disconnected [*i.e.*, disengaged] ... ." *Id.* at p. 3. *See* LCF002474 (describing how the "One-Way Clutch Bearing (i.e., the Safety Device)" in combination with the "Front Shaft" [support element 16] allows the "Front Roller Subassembly" to rotate around the "Front Shaft" [i.e., the shaft internal to shaft 4] in only one direction."). Because the safety device [13] is coupled to the running belt [11] via the front running belt pulley [6] and the safety device [13] "allows rotation in one direction only," *id.*, the first rotatable element [14] and the running belt [11] are freely rotatable in a first direction relative to the frame [1]. *See also, e.g.*, LCF002474 (describing how the "One-Way Clutch Bearing (i.e., the Safety Device)" in combination with the "Front	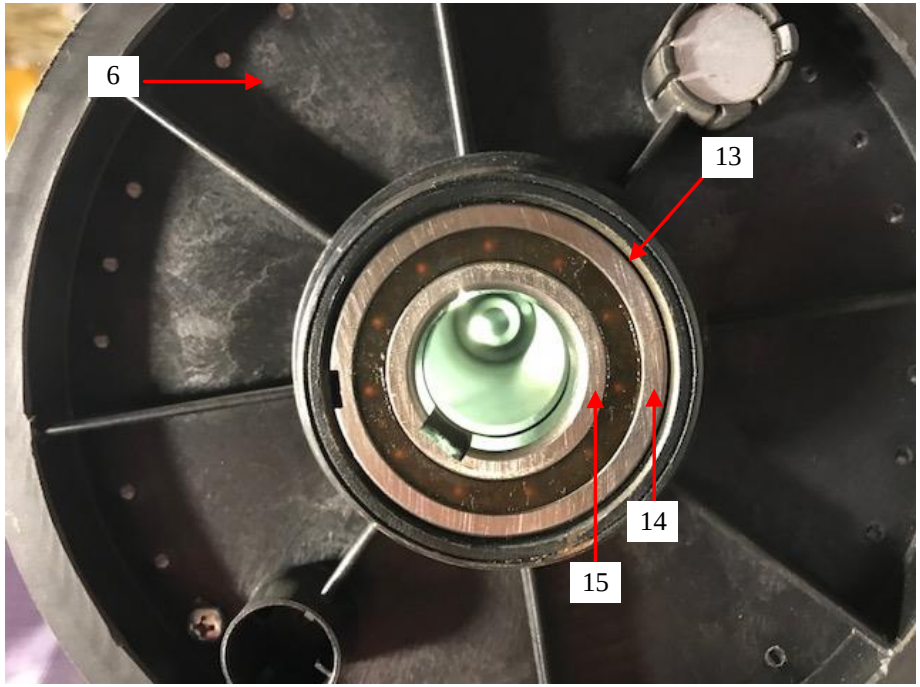 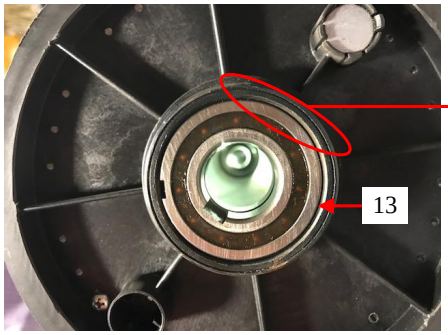

the '884 Patent	Assault Fitness AirRunner ("the Infringing Product")	
	Shaft" [support element 16] allows the "Front Roller Subassembly" to rotate around the "Front Shaft" [i.e., the shaft internal to shaft 4] in only one direction."), and LCF001867 ("The belt moves freely in only one direction"). However, in a second direction of rotation, opposite the first direction of rotation, "engagement … [occurs] according to the relative motion of the" first and second rotatable elements [14] and [15], *id.* at p. 5, to "prevent[] [a] reverse rotation," *id.* at p. 3, of the first rotatable element [14] and the running belt [11].	

Appendix B – Claim Chart for U.S. Patent No. 10,561,884 ("the '884 Patent")

the '884 Patent	Assault Fitness AirRunner ("the Infringing Product")	
51. The manually powered treadmill of claim 50, wherein at least one of the at least one rear running belt pulley and the at least one front running belt pulley are formed from an electrically insulating material.	The manually powered treadmill having "at least one of the at least one rear running belt pulley and the at least one front running belt pulley" formed of an "electrically insulating material," is literally present in the Infringing Product. The rear running belt pulley [7] and the front running belt pulley [6] are formed of a "strong and chemical-resistant ABS." *See Assault AirRunner Manual Treadmill Technical Specifications and Use Guidelines* at p. 2. *See also, e.g.,* LCF001993 ("The AirRunner is manufactured of durable materials; the plastics are molded of strong and chemical resistant ABS"). ABS is a type of plastic. The Specification discloses that plastic is an example of "electrically insulating material." *See* '884 Patent at col. 5, ll. 63-63. Therefore and as shown, the rear running belt pulley [7] and the front running belt pulley [6] are formed from an "electrically insulating material."	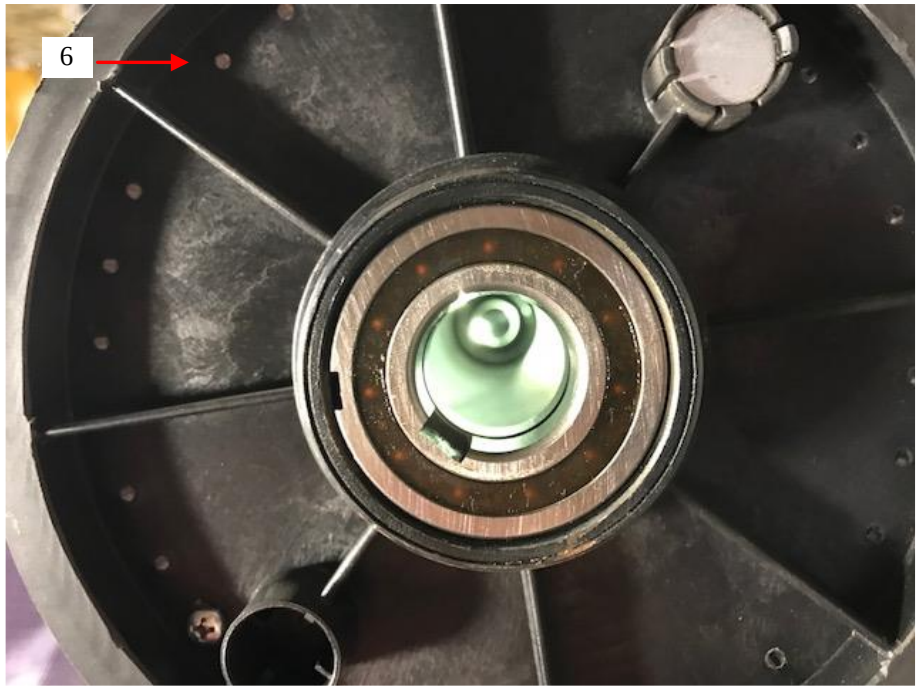

Appendix B – Claim Chart for U.S. Patent No. 10,561,884 (“the ’884 Patent”)

the ’884 Patent	Assault Fitness AirRunner (“the Infringing Product”)	
	While the picture only shows the front running belt pulley [6], a similar structure is provided with the rear running belt pulley [7].	

Appendix B – Claim Chart for U.S. Patent No. 10,561,884 ("the '884 Patent")

the '884 Patent	Assault Fitness AirRunner ("the Infringing Product")	
52. The manually powered treadmill of claim 50, further comprising a front shaft coupled to frame, the front shaft being adapted to support the at least one front running belt pulley.	The manually powered treadmill having a ""Front Shaft" coupled to [the] frame," that is "adapted to support the at least one front running belt pulley" is literally present in the Infringing Product. The Court adopted the plain and ordinary meaning of the term "shaft." As shown, a "Front Shaft" [4] is coupled to the frame [1]. As defined in the specification, and construed by the Court, "the term 'coupled' means the joining of two members directly or indirectly to one another … . Such joining may be achieved with the two members or the two members and any additional intermediate members." *See* '884 Patent at col. 32, ll. 22-27; Dkt. 59 at 8, n.1. Thus, the "Front Shaft" [4] may be coupled to the frame [1] directly or indirectly through an intermediate member (*e.g.*, via support element [16]). As also shown, the "Front Shaft" [4] supports the front running belt pulley [6].	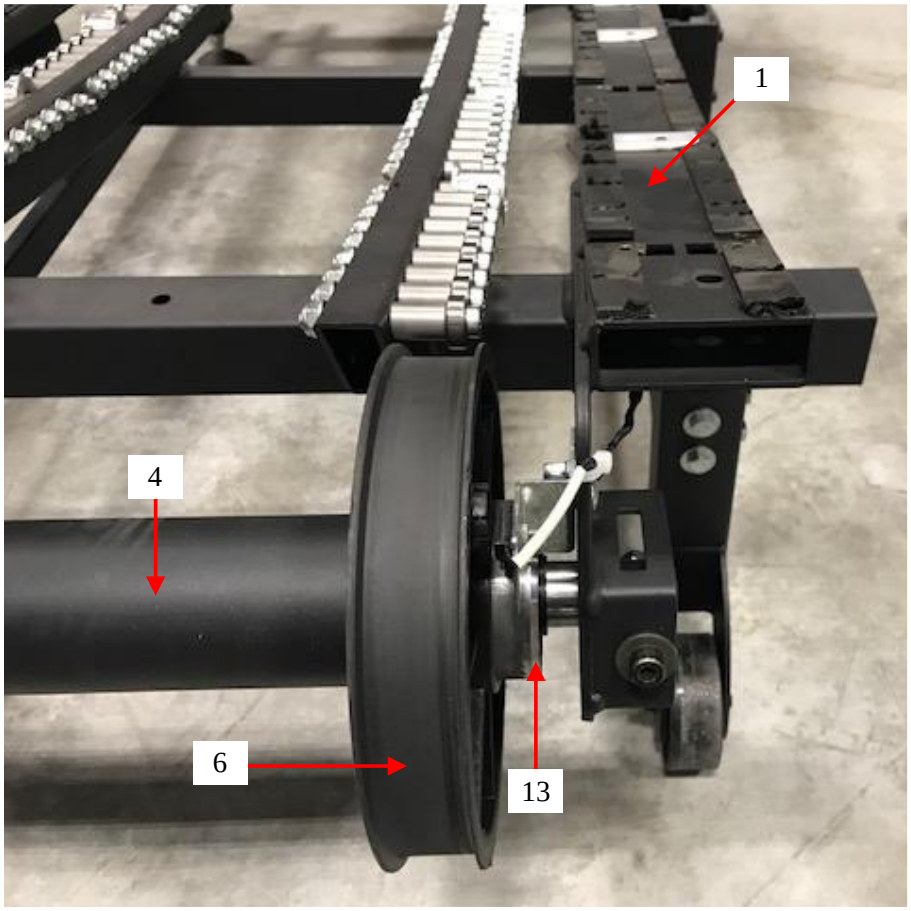

Appendix B – Claim Chart for U.S. Patent No. 10,561,884 ("the '884 Patent")

the '884 Patent	Assault Fitness AirRunner ("the Infringing Product")	
	See also, e.g., LCF001762 (illustrating the part no. 511* or "Front Roller Assembly" includes a shaft coupled to the pulley), and LCF002475 (illustrating the "Front Roller Subassembly" includes a "Front Roller Tube" [i.e., shaft 4] coupled to the pulleys).	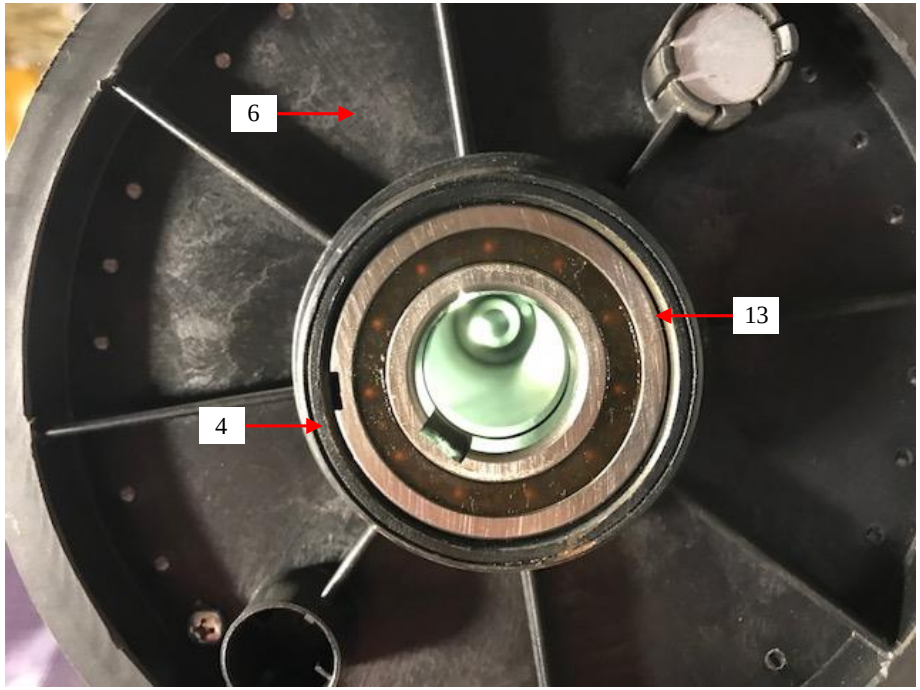

Appendix B – Claim Chart for U.S. Patent No. 10,561,884 ("the '884 Patent")

the '884 Patent	Assault Fitness AirRunner ("the Infringing Product")	
53. The manually powered treadmill of claim 50, further comprising a rear shaft coupled to frame, the rear shaft being adapted to support the at least one rear running belt pulley.	The manually powered treadmill having a "rear shaft coupled to [the] frame" that is "adapted to support the at least one rear running belt pulley" is literally present in the Infringing Product. The Court adopted the plain and ordinary meaning of the term "shaft." As shown, a rear shaft [5] is coupled to the frame [1]. As defined in the specification, and construed by the Court, "the term 'coupled' means the joining of two members directly or indirectly to one another … . Such joining may be achieved with the two members or the two members and any additional intermediate members." *See* '884 Patent at col. 32, ll. 22-27; Dkt. 59 at 8, n.1. Thus, coupling of the rear shaft [5] to the frame [1] may be directly or indirectly, such as through an intermediate member (*e.g.*, via support element [17]). As also shown, the rear shaft [5] supports the rear running belt pulley [7].	

Appendix B – Claim Chart for U.S. Patent No. 10,561,884 (“the ’884 Patent”)

the ’884 Patent	Assault Fitness AirRunner (“the Infringing Product”)	
	See also, e.g., LCF001762 (illustrating the part no. 512* or “Rear Roller Assembly” includes a shaft coupled to the pulley), and LCF 002470 (illustrating the Rear Roller Subassembly includes a Roller Tube [i.e., shaft 5] coupled to the pulleys).	

Appendix B – Claim Chart for U.S. Patent No. 10,561,884 ("the '884 Patent")

the '884 Patent	Assault Fitness AirRunner ("the Infringing Product")	
54. The manually powered treadmill of claim 50, wherein the first and second rotatable elements of the safety device at least partly form a one-way bearing.	The "first and second rotatable elements of the safety device," forming a "one-way bearing," is literally present in the Infringing Product. The safety device [13] includes an Altra Industrial Motion brand type CSK 25 PP which has "both [an] inner and outer race," *see, e.g.*, Altra Industrial Motion, *Overrunning Clutches and Backstops* at p. 4 (2017), and is a "self-contained ball *bearing* unit[]," *id.* at p. 9 (emphasis added). Specifically, the safety device [13] is a CSK 25 PP "sprag type freewheel[] integrated into a 62 … series ball *bearing*[] ... ." *Id.* at p. 16 (emphasis added). The CSK 25 PP "allows rotation in one direction only ... . The freewheel prevents reverse rotation... ." *Id.* at p. 3. As shown, the safety device [13] is at least partly formed by the first rotatable element [14] and the second rotatable element [15] is "self-contained ball *bearing* unit[]," *id.* at p. 9 (emphasis added), which "allows rotation in one direction only ... . The	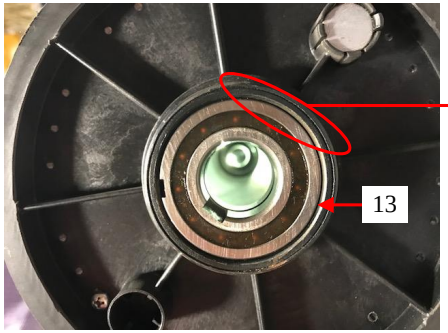 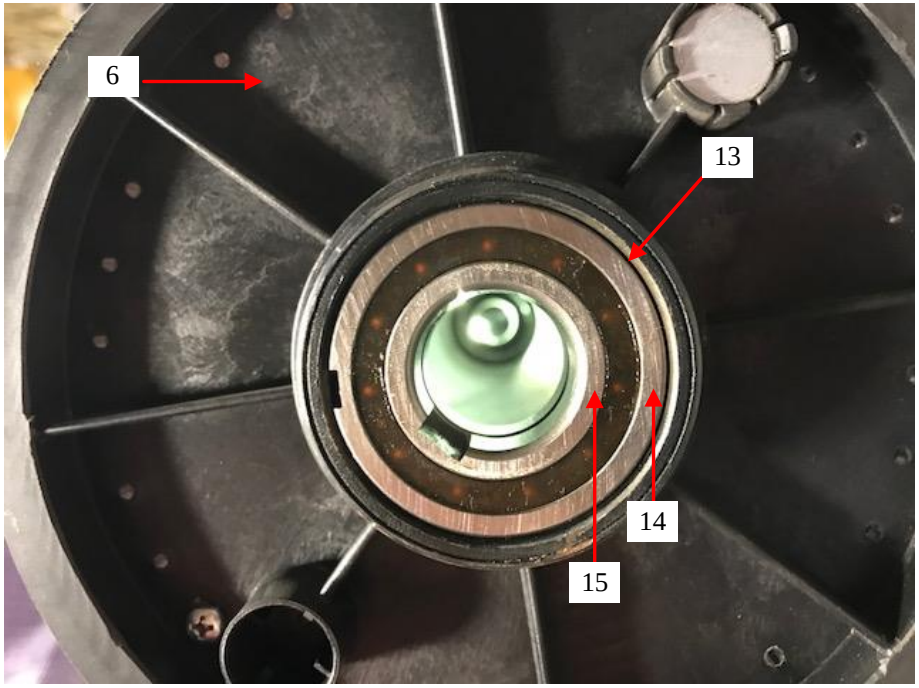

the '884 Patent	Assault Fitness AirRunner ("the Infringing Product")	
	freewheel prevents reverse rotation ... ." *Id.* at p. 3. Thus, the safety device is a bearing that allows rotation in only one direction (*i.e.*, a one-way bearing). *See also, e.g.,* LCF001767 (at row 75 "BEARING, ONE-WAY") and LCF002474 (describing the included One-Way Clutch Bearing as "i.e., the safety device").	

Appendix B – Claim Chart for U.S. Patent No. 10,561,884 ("the '884 Patent")

the '884 Patent	Assault Fitness AirRunner ("the Infringing Product")	
57. A method, comprising		
providing a manually powered treadmill,	A "manually powered treadmill" is literally the infringing product. The pictured Assault Fitness AirRunner is described in the Assault AirRunner Precor Marketing Brochure, as a "completely manual [treadmill], with no electrical consumption." *See, e.g., AirRunner The Premier Elite Fitness Running Machine* Brochure at p. 2 (2017). *See also, e.g.,* LCF000017 ("The Assault AirRunner completely redefines the manual treadmill…"), LCF000678 ("Manual Treadmill"), LCF001832 (Model described as "AirRunner Manual Treadmill"), and LCF001866 (The "Assault AirRunner Warning Label" states "This treadmill is manually operated").	

Appendix B – Claim Chart for U.S. Patent No. 10,561,884 ("the '884 Patent")

the '884 Patent	Assault Fitness AirRunner ("the Infringing Product")	
the manually powered treadmill having a frame with a front end and a rear end;	The "manually powered treadmill having a frame with a front end and a rear end," is literally present in the Infringing Product. As shown, the manually powered treadmill includes a frame [1] with a front end [2] and a rear end [3]. *See also, e.g.,* LCF001762 (identifying part no. 501 as "Main Frame"), LCF001764 (identifying part no. 501 as "Main Frame")), LCF001766 (identifying part no. 501 as "Main Frame"), LCF002465 (titled "01 – Base Frame (Welded Together).pdf").	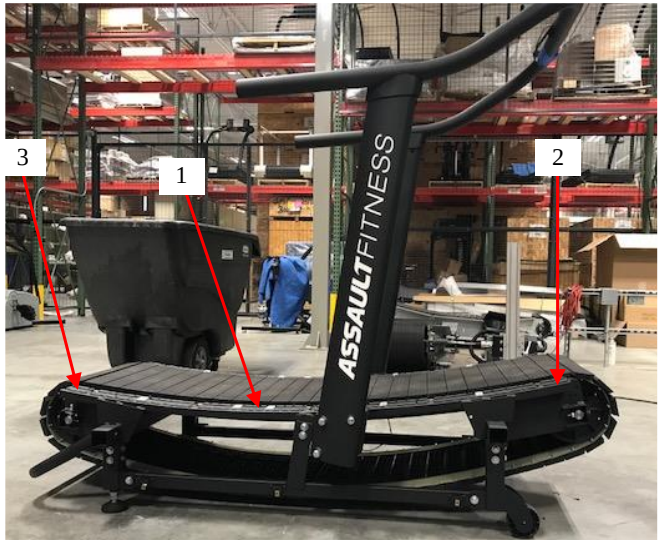

Appendix B – Claim Chart for U.S. Patent No. 10,561,884 ("the '884 Patent")

the '884 Patent	Assault Fitness AirRunner ("the Infringing Product")	
		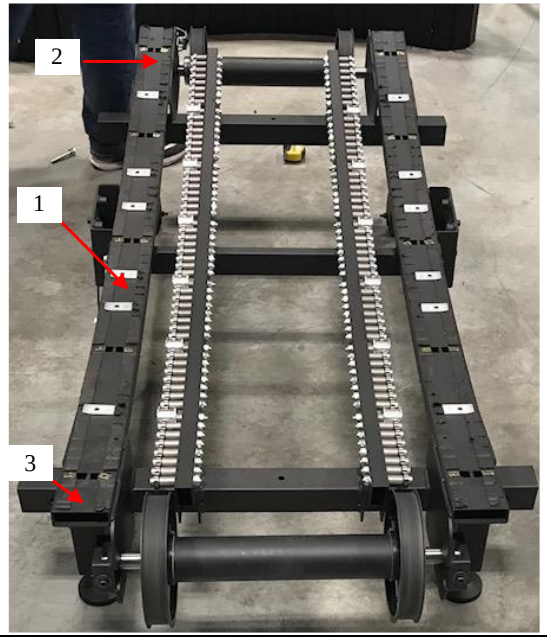

Appendix B – Claim Chart for U.S. Patent No. 10,561,884 ("the '884 Patent")

the '884 Patent	Assault Fitness AirRunner ("the Infringing Product")	
providing a plurality of bearings coupled to the frame, wherein the plurality of bearings define at least a portion of a curved top profile;	A "plurality of bearings coupled to the frame" where the plurality of bearings "define at least a portion of a curved top profile" is literally present in the Infringing Product. As shown, a plurality of bearings [10] are coupled to the frame [1]. As defined in the specification, and construed by the Court, "the term 'coupled' means the joining of two members directly or indirectly to one another. Such joining may be stationary or moveable in nature … . Such joining may be achieved with the two members or the two members and any additional intermediate members." *See* '884 Patent at col. 32, ll. 22-27; Dkt. 59 at 8, n.1. Thus, the plurality of the bearings [5] may be coupled to the frame [1] directly or indirectly through an intermediate member. Therefore and as shown, the plurality of bearings [10] are coupled to the frame [1].	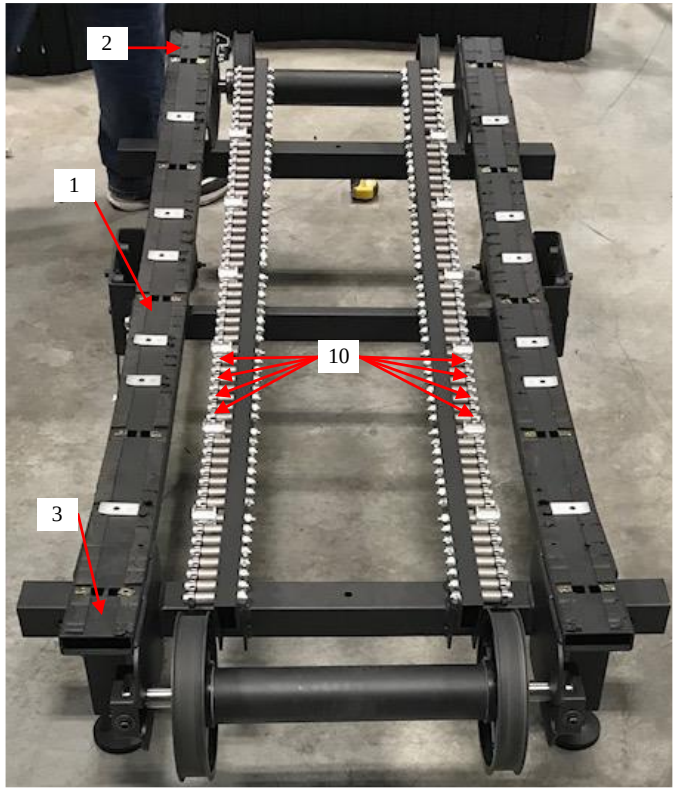 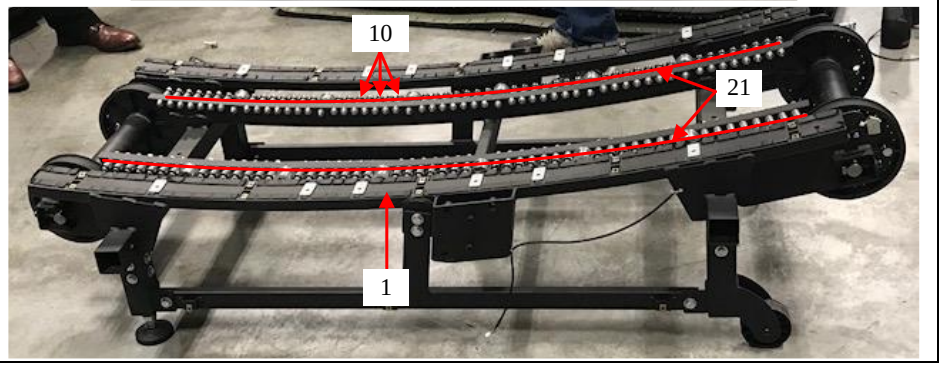

Appendix B – Claim Chart for U.S. Patent No. 10,561,884 ("the '884 Patent")

the '884 Patent	Assault Fitness AirRunner ("the Infringing Product")	
	As also shown, the plurality of bearings define at least a portion of a curved top profile [21]. *See also, e.g.,* LCF000166 (identifying part nos. 545* "Belt Support Bearing" and 545-A "Belt Support Bearing Assembly" which correspond to a plurality of bearings [10]), LCF000895 (under "Low Impact" describing the treadmill as "The contoured design…"), LCF02133 (under "Belt Design" describing the treadmill as "Contoured"), LCF002467 (titled "03 – Base Frame with Bearings – Guide Pulleys – Rollers.pdf" showing a plurality of bearings coupled to the frame to define a curved top profile).	

Appendix B – Claim Chart for U.S. Patent No. 10,561,884 ("the '884 Patent")

the '884 Patent	Assault Fitness AirRunner ("the Infringing Product")	
disposing a running belt on the plurality of bearings such that the curved top profile of plurality of bearings define at least a portion of a curved running surface of the running belt;	A "running belt [disposed] on the plurality of bearings such that the curved top profile of plurality of bearings define at least a portion of a curved running surface of the running belt" is literally present in the Infringing Product. As shown, the running belt [11] is disposed on the plurality of bearings [10] such that the curved top profile [21] defines at least a portion of a curved running surface [12] of the running belt [11]. *See also, e.g.,* LCF002471 (instructing the "Belt Assembly is then lowered onto the front and rear roller pulleys, side support bearings, and guide pulleys," and that "the top portion of the belt rests upon the supporting bearings and guide pulleys").	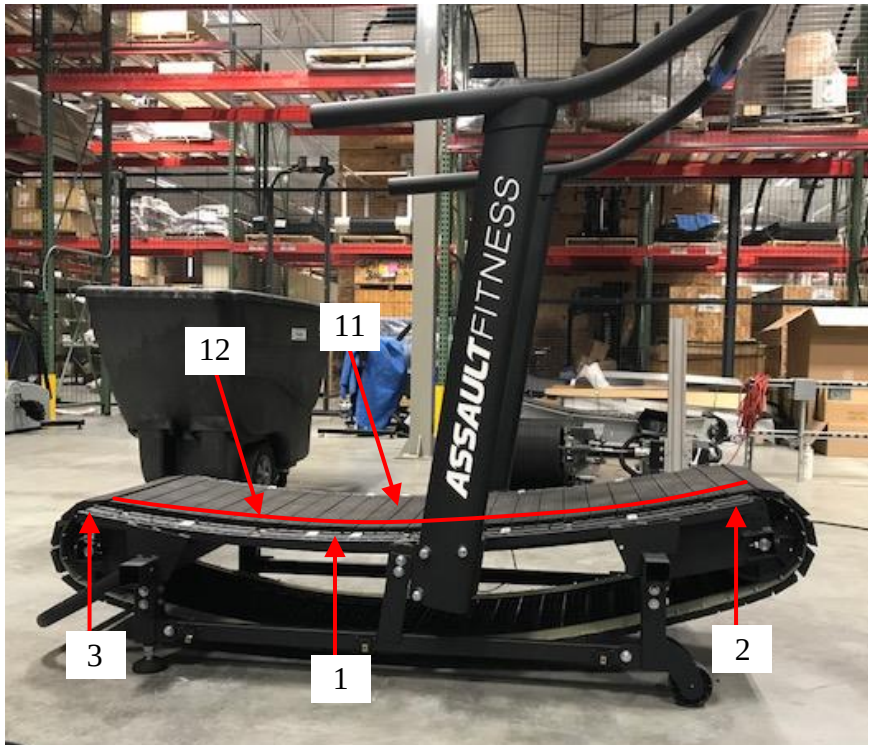 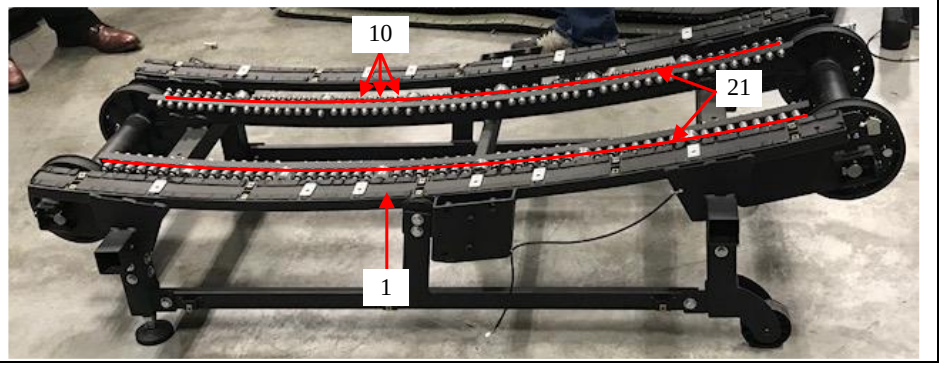

Appendix B – Claim Chart for U.S. Patent No. 10,561,884 ("the '884 Patent")

the '884 Patent	Assault Fitness AirRunner ("the Infringing Product")	
		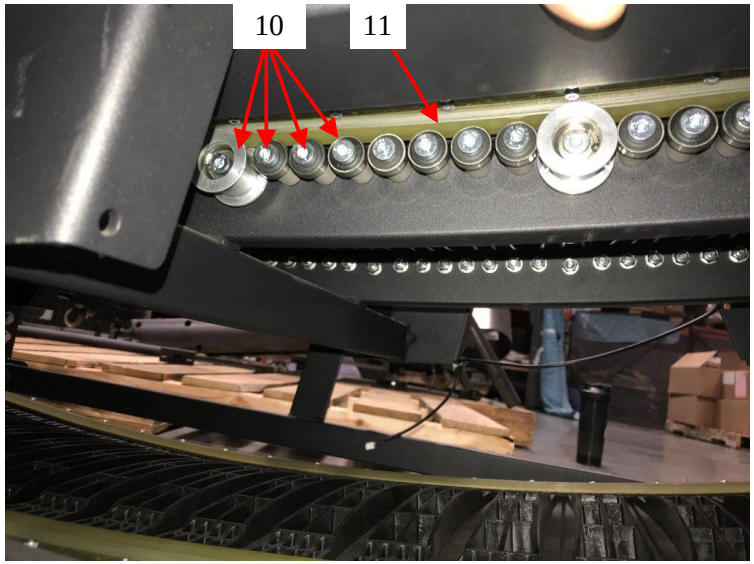 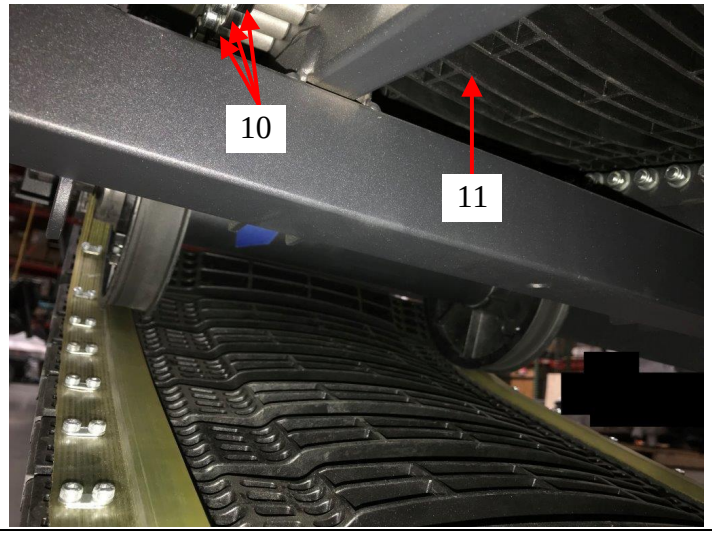

Appendix B – Claim Chart for U.S. Patent No. 10,561,884 ("the '884 Patent")

the '884 Patent	Assault Fitness AirRunner ("the Infringing Product")	
providing a safety device coupled to the frame and to the running belt, the safety device having a first rotatable element and a second rotatable element, wherein at least one of the first and second rotatable elements are adapted for rotation relative to the frame;	A "safety device coupled to the frame and the running belt" having "a first rotatable element and a second rotatable element" where "at least one of the first and second rotatable elements are adapted for rotation relative to the frame" is literally present in the Infringing Product. The Court construed the term "safety device" as "a device that includes the elements recited and restricts rotation to allow for only one rotational direction of movement." *See* Dkt. 59 at 23. As shown, a safety device [13] is coupled to the frame [1] and the running belt [11]. As defined in the specification, and construed by the Court, "the term 'coupled' means the joining of two members directly or indirectly to one another. Such joining may be stationary or moveable in nature … . Such joining may be achieved with the two members or the two members and any additional intermediate members." *See* '884 Patent at col. 32, ll. 22-27; Dkt. 59 at 8, n.1.	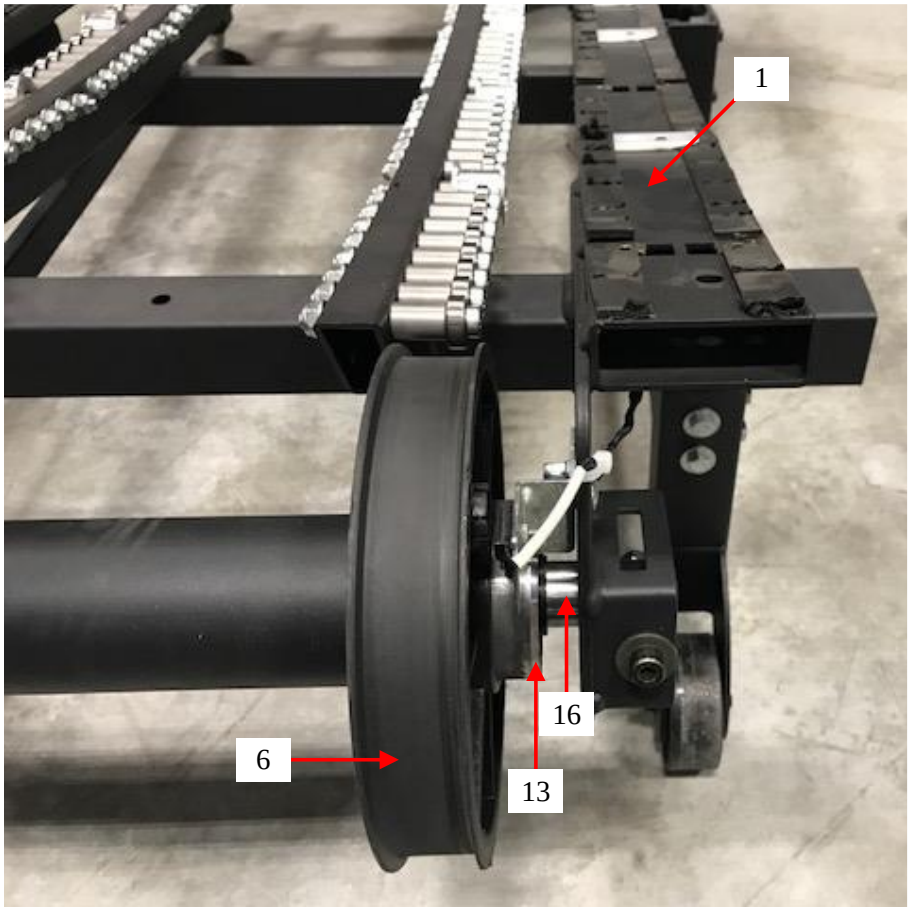

the '884 Patent	Assault Fitness AirRunner ("the Infringing Product")	
	Thus, the safety device [13] may be coupled to the frame [1] and the running belt [11] directly or indirectly through an intermediate member (*e.g.*, coupled to the frame [1] via support element [16] and to the running belt [11] via the front running belt pulley [6]). The safety device [13] includes a one-way bearing assembly. *See* LCF001767 (at row 75 "BEARING, ONE-WAY") and LCF002474 (describing the included One-Way Clutch Bearing as "i.e., the safety device"). Specifically, the safety device [13] includes an Altra Industrial Motion brand Combined Bearing/Freewheel type CSK 25 PP "sprag type freewheel[]." *See, e.g.*, Altra Industrial Motion, *Overrunning Clutches and Backstops* at p. 16 (2017). The CSK 25 PP has "both [an] inner and outer race." Id. at p. 4. Therefore, the safety device [13] includes a first rotatable element [14] (*i.e.*, the "outer race") and a second rotatable element [15] (*i.e.*, the "inner race"). "At least one of the first and second	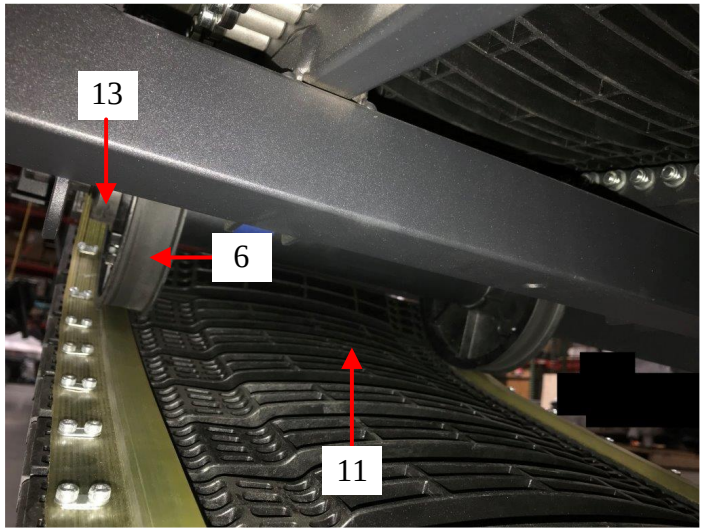 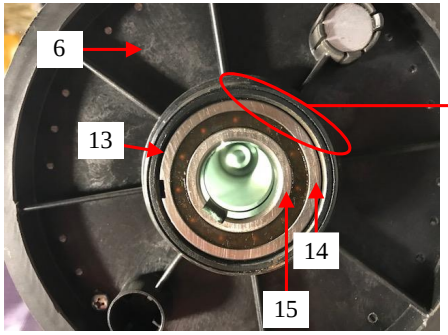

the '884 Patent	Assault Fitness AirRunner ("the Infringing Product")	
	rotatable elements [that] are adapted for rotation relative to the frame" can mean that only the first rotatable element is adapted for rotation relative to the frame; only the second rotatable element is adapted for rotation relative to the frame; or both of the first and second rotatable elements are adapted for rotation relative to the frame. In this configuration, the first rotatable element [14] is "adapted for rotation relative to the frame." The safety device [13] thus "restricts rotation to allow for only one rotational direction of movement." *See* LCF002474 (describing how the "One-Way Clutch Bearing (i.e., the Safety Device)" in combination with the "Front Shaft" [support element 16] allows the "Front Roller Subassembly" to rotate around the "Front Shaft" [i.e., the shaft internal to shaft 4] in only one direction.").	

Appendix B – Claim Chart for U.S. Patent No. 10,561,884 ("the '884 Patent")

the '884 Patent	Assault Fitness AirRunner ("the Infringing Product")	
permitting rotation of one of the first and second rotatable elements of the safety device and the running belt in a first direction of rotation; and substantially preventing rotation in a second direction, opposite the first direction, of the running belt and the one of the first and second rotatable elements by interference between the safety device and at least one of the first rotatable element and the second rotatable element.	"[P]ermitting rotation of one of the first and second rotatable elements of the safety device and the running belt in a first direction of rotation" and "substantially preventing rotation in a second direction, opposite the first direction, of the running belt and the one of the first and second rotatable elements by interference between the safety device and at least one of the first rotatable element and the second rotatable element" is literally present in the Infringing Product. The Court construed the term "substantially prevent," as "restricts rotation to allow for only one rotational direction of movement." *See* Dkt. 59 at 23. The safety device [13] includes a one-way bearing assembly. *See* LCF001767 (at row 75 "BEARING, ONE-WAY") and LCF002474 (describing the included One-Way Clutch Bearing as "i.e., the safety device"). Specifically, the safety device [13] includes an Altra Industrial Motion brand Combined Bearing/Freewheel type CSK 25 PP "sprag type	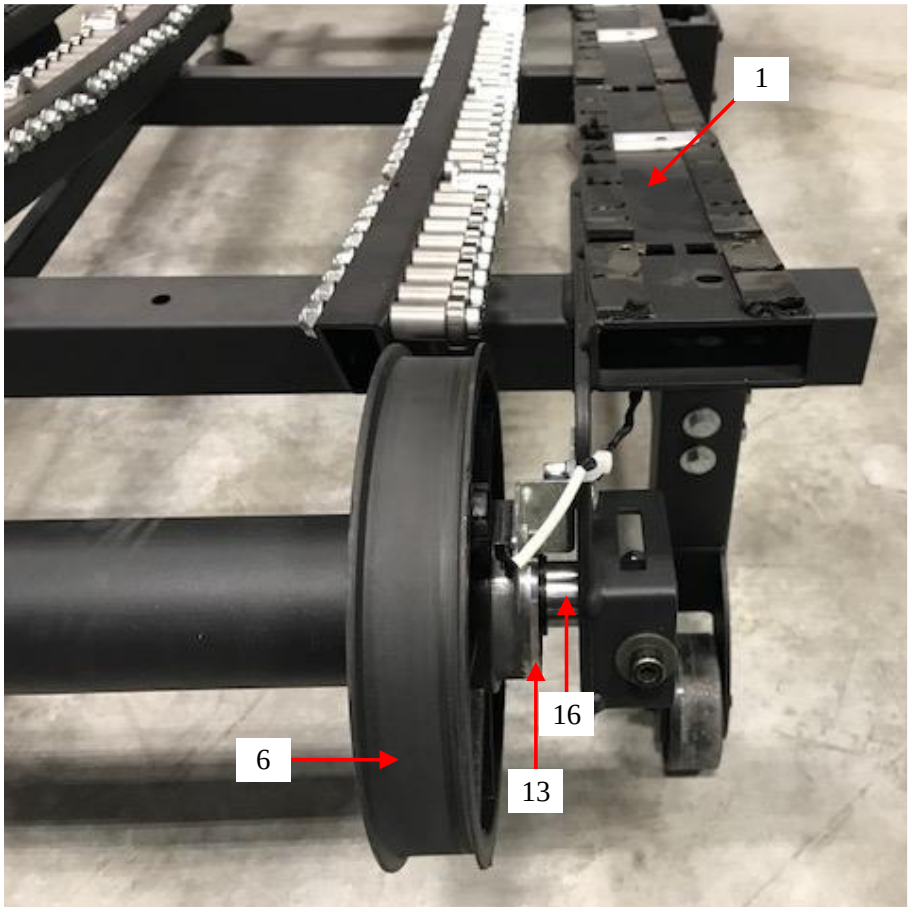

Appendix B – Claim Chart for U.S. Patent No. 10,561,884 ("the '884 Patent")

the '884 Patent	Assault Fitness AirRunner ("the Infringing Product")	
	freewheel[]." *See, e.g.*, Altra Industrial Motion, *Overrunning Clutches and Backstops* at p. 16 (2017). The CSK 25 PP has "both [an] inner and outer race," and "locking elements are positioned between [the] outer and [the] inner race which effect engaging and disengaging." *Id.* at p. 4. The CSK 25 PP "allows rotation in one direction only ... . The freewheel prevents reverse rotation if the drive is disconnected [*i.e.*, disengaged] ... ." *Id.* at p. 3. *See* LCF002474 (describing how the "One-Way Clutch Bearing (i.e., the Safety Device)" in combination with the "Front Shaft" [support element 16] allows the "Front Roller Subassembly" to rotate around the "Front Shaft" [i.e., the shaft internal to shaft 4] in only one direction."). Because the safety device [13] is coupled to the running belt [11] via the front running belt pulley [6] and "allows rotation in one direction only," *id.*, the second rotatable element [15] and the running belt [11] are permitted to rotate in a first direction. *See also, e.g.*, LCF002474	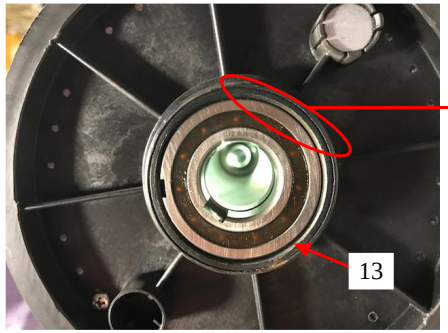 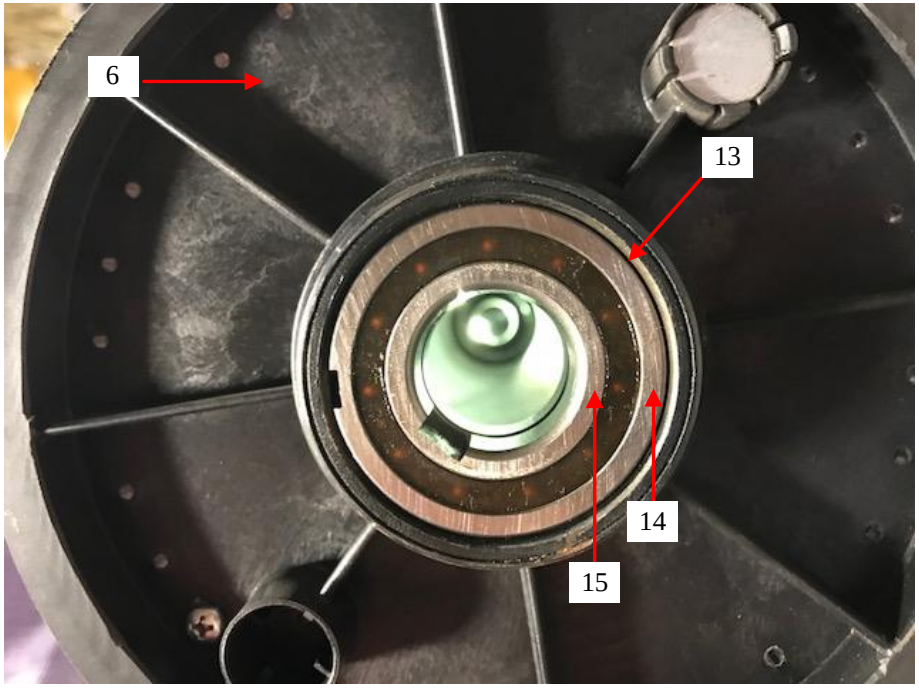

the '884 Patent	Assault Fitness AirRunner ("the Infringing Product")	
	(describing how the "One-Way Clutch Bearing (i.e., the Safety Device)" in combination with the "Front Shaft" [support element 16] allows the "Front Roller Subassembly" to rotate around the "Front Shaft" [i.e., the shaft internal to shaft 4] in only one direction."), and LCF001867 ("The belt moves freely in only one direction."). However, in a second direction of rotation, opposite the first direction of rotation, "engagement … [occurs] according to the relative motion of the" first and second rotatable elements [14] and [15], *id.* at p. 5, to substantially "prevent[] [a] reverse rotation," *id.* at p. 3, of the second rotatable element [15] and the running belt [11] relative to the first rotatable element [14]. *See also, e.g.,* LCF001867 ("The belt moves freely in only one direction.")	

Appendix B – Claim Chart for U.S. Patent No. 10,561,884 ("the '884 Patent")

the '884 Patent	Assault Fitness AirRunner ("the Infringing Product")	
59. A method according to claim 57, further comprising providing for the adjustment of the vertical incline of at least a portion of the running surface.	"[P]roviding for adjustment of the vertical incline of at least a portion of the running surface" is literally present in the Infringing Product. As shown, a support foot [27A] is coupled to the frame [1] using a threaded rod [28] which rod [28]allows movement of the support foot [27A] towards and away from the frame [1] to provide for adjustment of the vertical incline of at least a portion of the running surface of the manually powered treadmill. *See also, e.g.,* LCF000168 (under "Assembly Step Seven" "[e]nsure the unit is level and does not rock by adjusting the Stabilizer Leveling Feet").	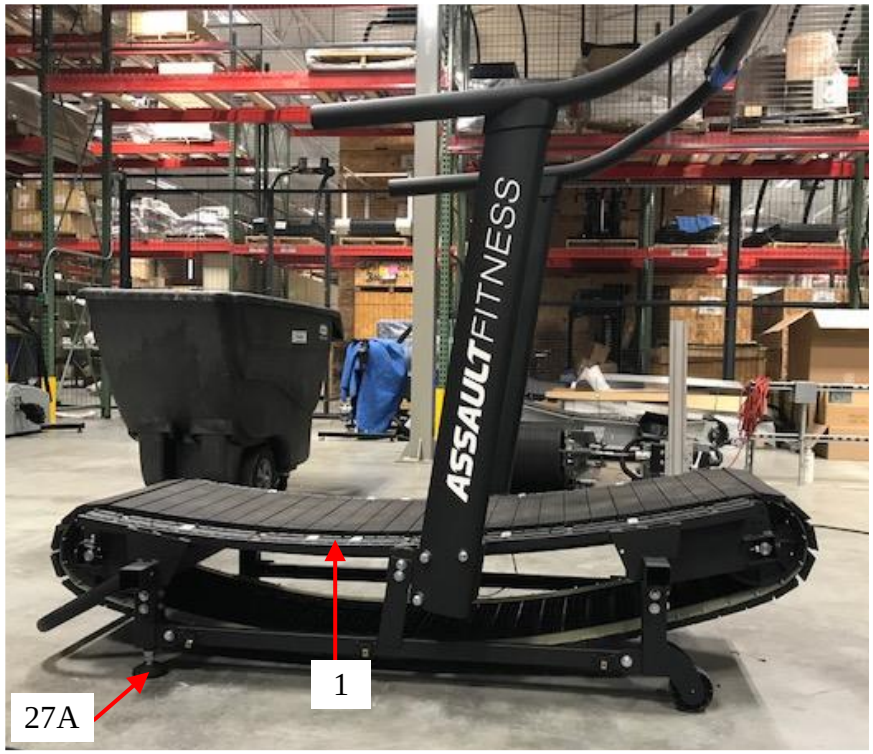 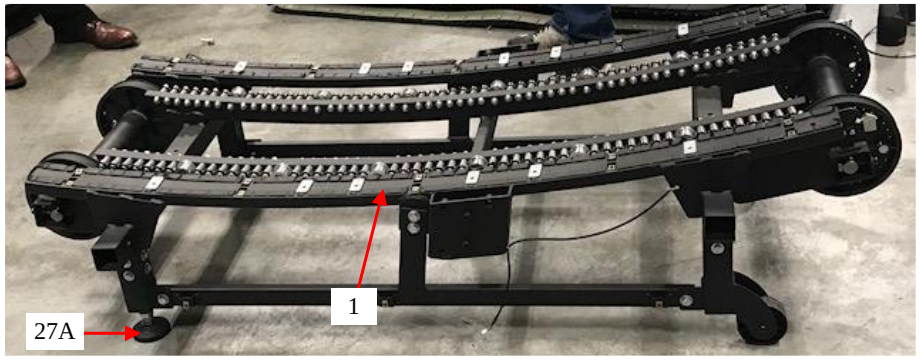

Appendix B – Claim Chart for U.S. Patent No. 10,561,884 ("the '884 Patent")
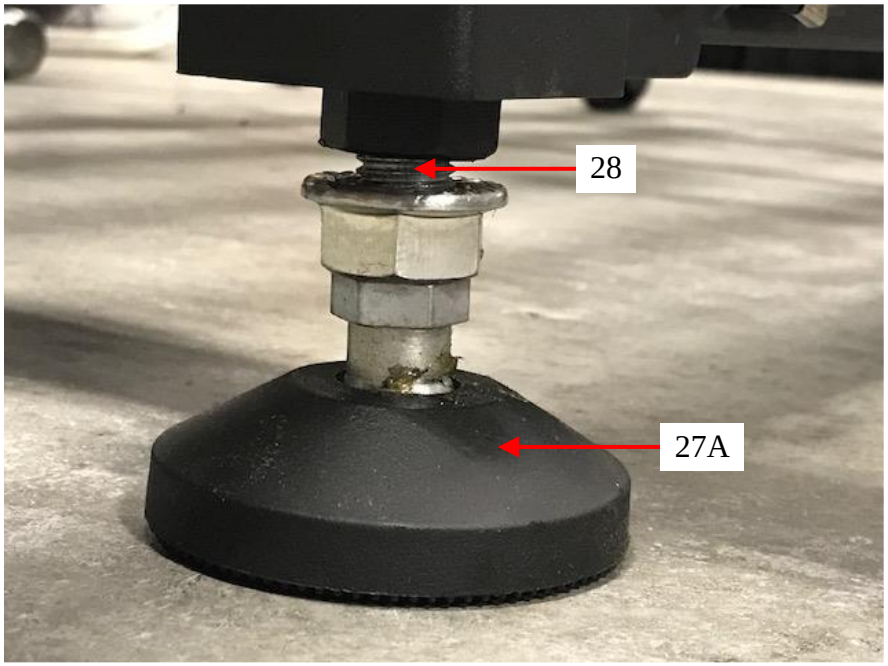
the '884 Patent	Assault Fitness AirRunner ("the Infringing Product")