Appendix C – Claim Chart for U.S. Patent No. 10,799,745 ("the '745 Patent")

* Many of the images contained herein show a disassembled representative Infringing Product in order to depict various elements of the Infringing Product. The disassembled Infringing Product has not been altered, modified, or otherwise changed relative to the as-sold Infringing Product. The serial number of the Infringing Product is M1701BK0024, which is shown in the picture below.

the '745 Patent	Assault Fitness AirRunner ("the Infringing Product")	
1. A treadmill, comprising:	A "treadmill" is literally the infringing product. The pictured Assault Fitness AirRunner is described in the Assault AirRunner Marketing Brochure, as "one of the lightest weight treadmills." *See, e.g.*, *AirRunner The Premier Elite Fitness Running Machine* Brochure at p. 2 (2017). *See also, e.g.*, LCF000017 ("The Assault AirRunner completely redefines the manual treadmill…"), LCF000678 (labeling the treadmill as a "Manual Treadmill"), LCF001832 (model described as "AirRunner Manual Treadmill"), LCF001866 (the "Assault AirRunner Warning Label"	

Appendix C – Claim Chart for U.S. Patent No. 10,799,745 ("the '745 Patent")

the '745 Patent	Assault Fitness AirRunner ("the Infringing Product")	
	states "This treadmill is manually operated.").	
a frame;	A "frame" is literally present in the Infringing Product. As shown, the treadmill includes a frame [1]. *See also, e.g.,* LCF001762 (identifying part no. 501 as "Main Frame"), and (titled "01 – Base Frame (Welded Together).pdf").	

Appendix C – Claim Chart for U.S. Patent No. 10,799,745 ("the '745 Patent")

the '745 Patent	Assault Fitness AirRunner ("the Infringing Product")	

Appendix C – Claim Chart for U.S. Patent No. 10,799,745 ("the '745 Patent")

the '745 Patent	Assault Fitness AirRunner ("the Infringing Product")	
a front running belt pulley coupled to the frame;	A "front running belt pulley coupled to the frame" is literally present in the Infringing Product. As shown, at least one front running belt pulley [6] is coupled to the frame [1]. As defined in the specification, and as construed by the Court, "the term 'coupled' means the joining of two members directly or indirectly to one another … . Such joining may be achieved with the two members or the two members and any additional intermediate members." *See* '745 Patent at col. 32, ll. 22-27; Dkt. 59 at 8, n.1. Thus, the front running belt pulley [6] may be coupled to the frame [1] directly or indirectly through an intermediate member (*e.g.*, via support element [16]). *See also, e.g.*, LCF000166 (illustrating part no. 511* "Front Roller," and part no. 511-A "Front Roller Assembly" which is shown to include a pulley coupled to the frame) and LCF002475 (illustrating the "Front Roller Subassembly" includes two pulleys).	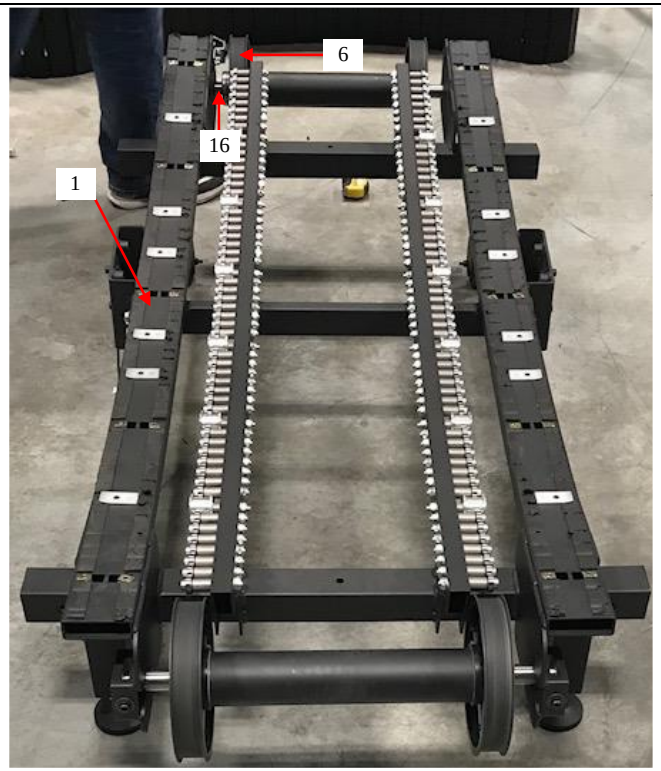 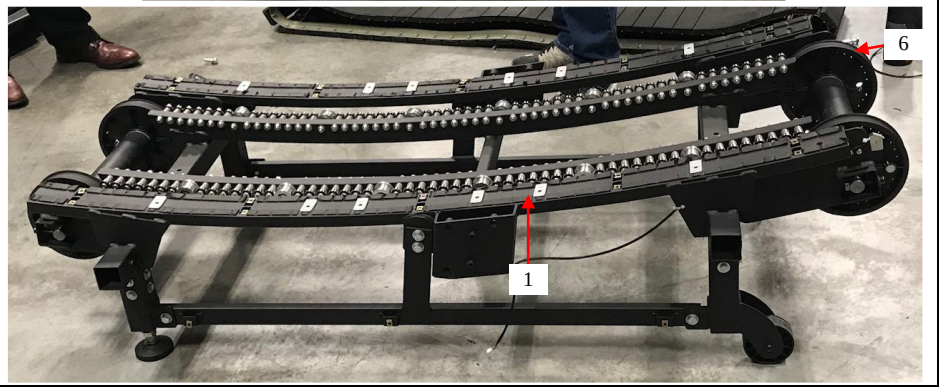

Appendix C – Claim Chart for U.S. Patent No. 10,799,745 ("the '745 Patent")

the '745 Patent	Assault Fitness AirRunner ("the Infringing Product")	
a rear running belt pulley coupled to the frame and spaced a distance from the front running belt pulley;	A "rear running belt pulley coupled to the frame" and "spaced a distance from the at least one front running belt pulley" is literally present in the Infringing Product. As shown, at least one rear running belt pulley [7] is coupled to the frame [1]. As defined in the specification, and construed by the Court, "the term 'coupled' means the joining of two members directly or indirectly to one another … . Such joining may be achieved with the two members or the two members and any additional intermediate members." *See* '745 Patent at col. 32, ll. 22-27; Dkt. 59 at 8, n.1. Thus, the rear running belt pulley [7] may be coupled to the frame [1] directly or indirectly through an intermediate member (*e.g.*, via support element [17]). As also shown, the rear running belt pulley [7] is spaced a distance [31] from the front running belt pulley [6]. *See also, e.g.*, LCF000166 (illustrating part no. 512* "Rear	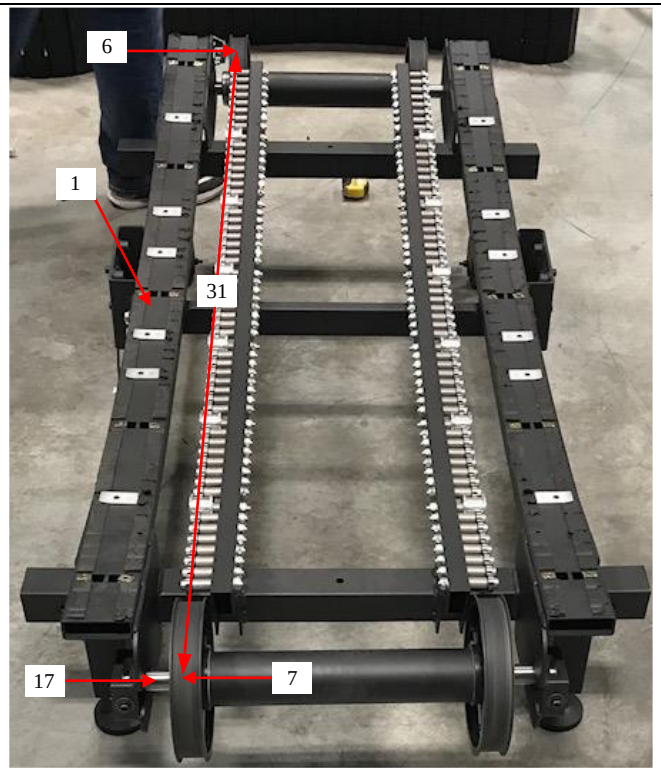 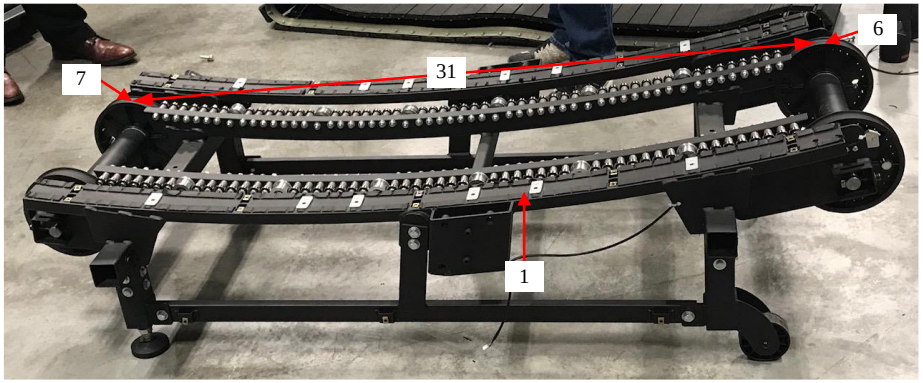

Appendix C – Claim Chart for U.S. Patent No. 10,799,745 ("the '745 Patent")

the '745 Patent	Assault Fitness AirRunner ("the Infringing Product")	
	Roller," and part no. 512-A "Rear Roller Assembly" which is shown to include a pulley coupled to the frame) and LCF002470 (titled "03c – Rear Roller Assembly.pdf" and illustrating at least one pulley as part of the "Rear Roller Assembly").	

Appendix C – Claim Chart for U.S. Patent No. 10,799,745 ("the '745 Patent")

the '745 Patent	Assault Fitness AirRunner ("the Infringing Product")	
a plurality of bearings coupled to the frame;	A "plurality of bearings coupled to the frame" are literally present in the Infringing Product. As shown, a plurality of bearings [10] are coupled to the frame [1]. As defined in the specification, and construed by the Court, "the term 'coupled' means the joining of two members directly or indirectly to one another. Such joining may be stationary or moveable in nature … . Such joining may be achieved with the two members or the two members and any additional intermediate members." *See* '745 Patent at col. 32, ll. 22-27; Dkt. 59 at 8, n.1. Thus, the plurality of bearings [10] may be coupled to the frame [1] directly or indirectly through one or more intermediate members. Therefore and as shown, the plurality of bearings [10] are coupled to the frame [1]. *See also, e.g.*, LCF000166 (part no. 545* "Belt Support Bearing" and 545-A "Belt Support Bearing Assembly" which correspond to a plurality of bearings [10]), LCF001993	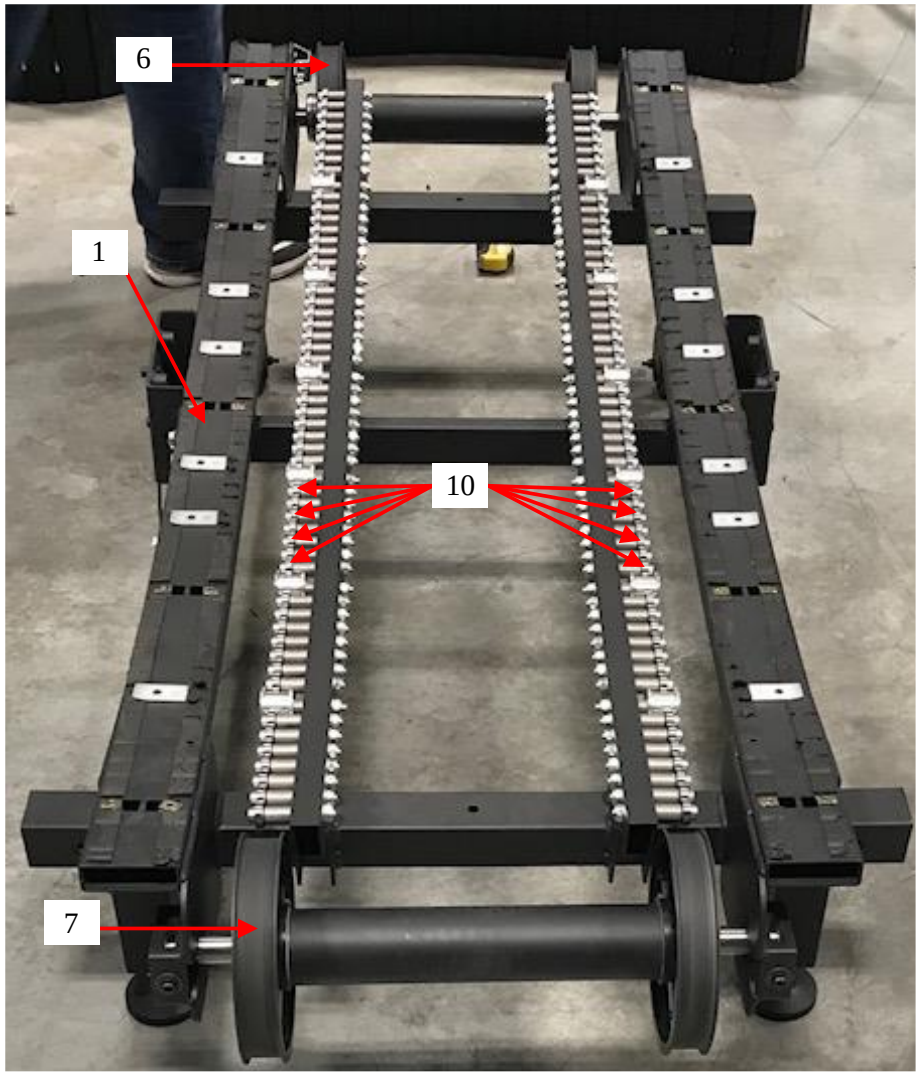

Appendix C – Claim Chart for U.S. Patent No. 10,799,745 ("the '745 Patent")

the '745 Patent	Assault Fitness AirRunner ("the Infringing Product")	
	(under "Specifications" "Running Belt Support: 12 Guide Pulleys; 100 Cartridge Bearings"), LCF002133 (under "Components" "Drive System" listed "100 Precision Ball Bearings w/ 12 Roller Guides"), LCF002467 (titled "03 – Base Frame with Bearings – Guide Pulleys – Rollers.pdf" showing a plurality of bearings coupled to the frame).	

Appendix C – Claim Chart for U.S. Patent No. 10,799,745 ("the '745 Patent")

the '745 Patent	Assault Fitness AirRunner ("the Infringing Product")	
a running belt at least partially supported by at least one of the front running belt pulley and the rear running belt pulley, wherein the running belt includes a running surface, at least a portion of which is curved;	A "running belt at least partially supported by at least one of the front running belt pulley and the at least one rear running belt pulley" where "the running belt includes a running surface, at least a portion which is curved" is literally present in the Infringing Product. As shown, a running belt [11] includes a curved running surface [12]. The running belt [11] is at least partially supported by the front running belt pulley [6] and the rear running belt pulley [7]. While the third picture only shows the front running belt pulley [6] supporting the running belt [11], a corresponding configuration is provided for the rear running belt pulley [7] and the running belt [11]. *See also, e.g.,* LCF000013 (describing the treadmill as including "…a slat belt running surface…"), LCF000795 (under "Proposed Product Features" "Slatted belt construction: allows for curved running surface" and under "Frame" "Shall be designed to support a curved	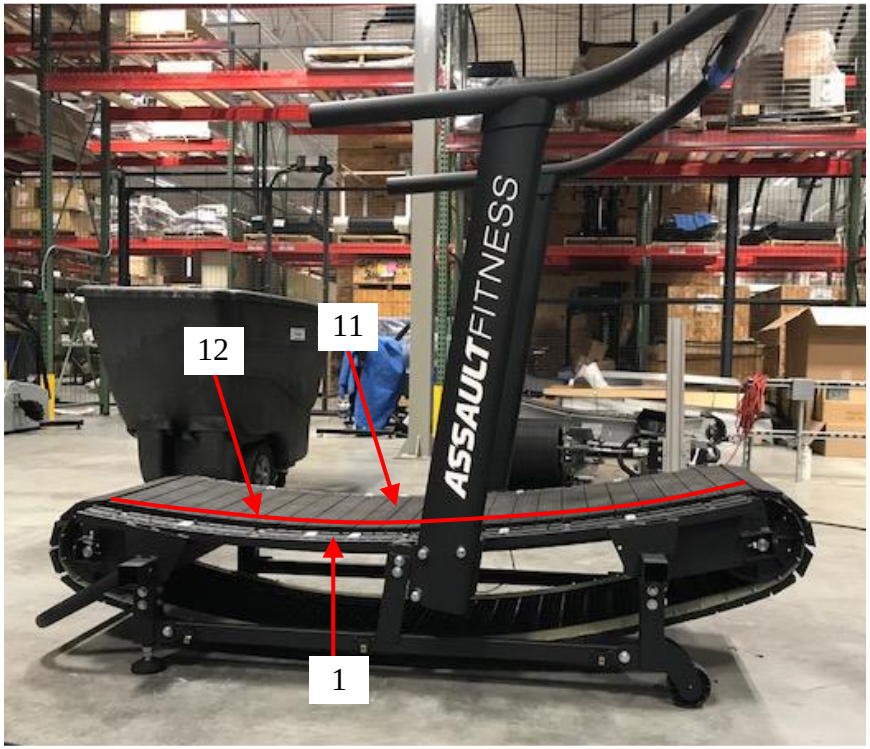 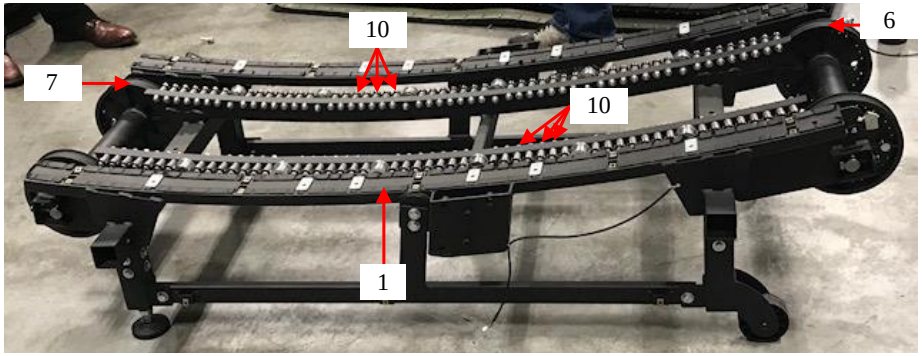

Appendix C – Claim Chart for U.S. Patent No. 10,799,745 ("the '745 Patent")

the '745 Patent	Assault Fitness AirRunner ("the Infringing Product")	
	running surface,"), LCF000895 (under "Low Impact" "The contoured design…"), LCF02133 (with "Belt Design" described as "Contoured").	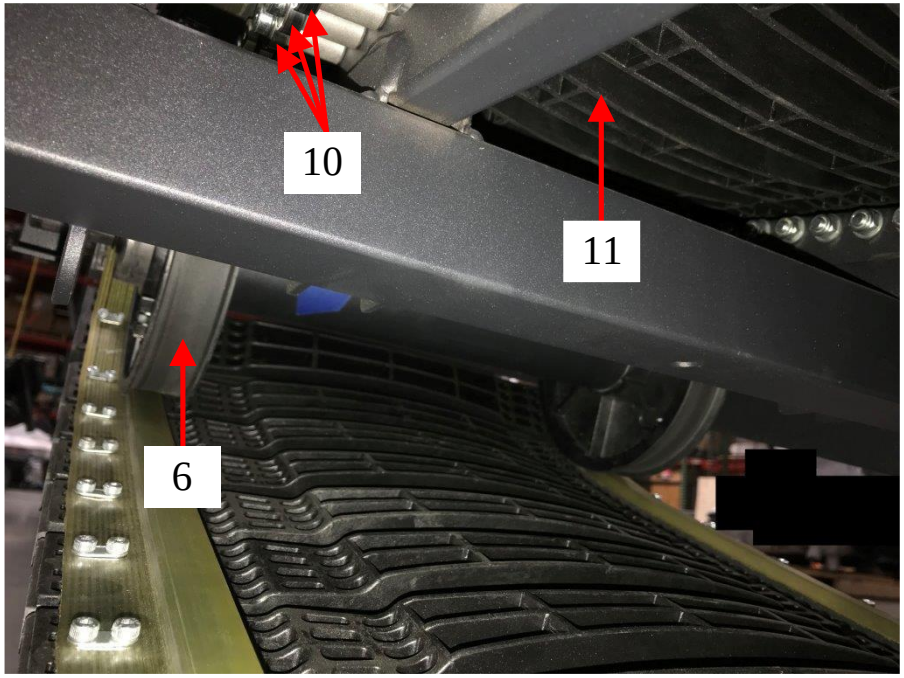

Appendix C – Claim Chart for U.S. Patent No. 10,799,745 ("the '745 Patent")

the '745 Patent	Assault Fitness AirRunner ("the Infringing Product")	
a support element coupled to the frame; and	A "support element coupled to the frame" is literally present in the Infringing Product. As shown, the support element [16] is coupled to the frame [1]. *See also, e.g.,* LCF002467 (describing that the shafts *i.e.*, support element [16] "are fixedly coupled to the frame with bolts").	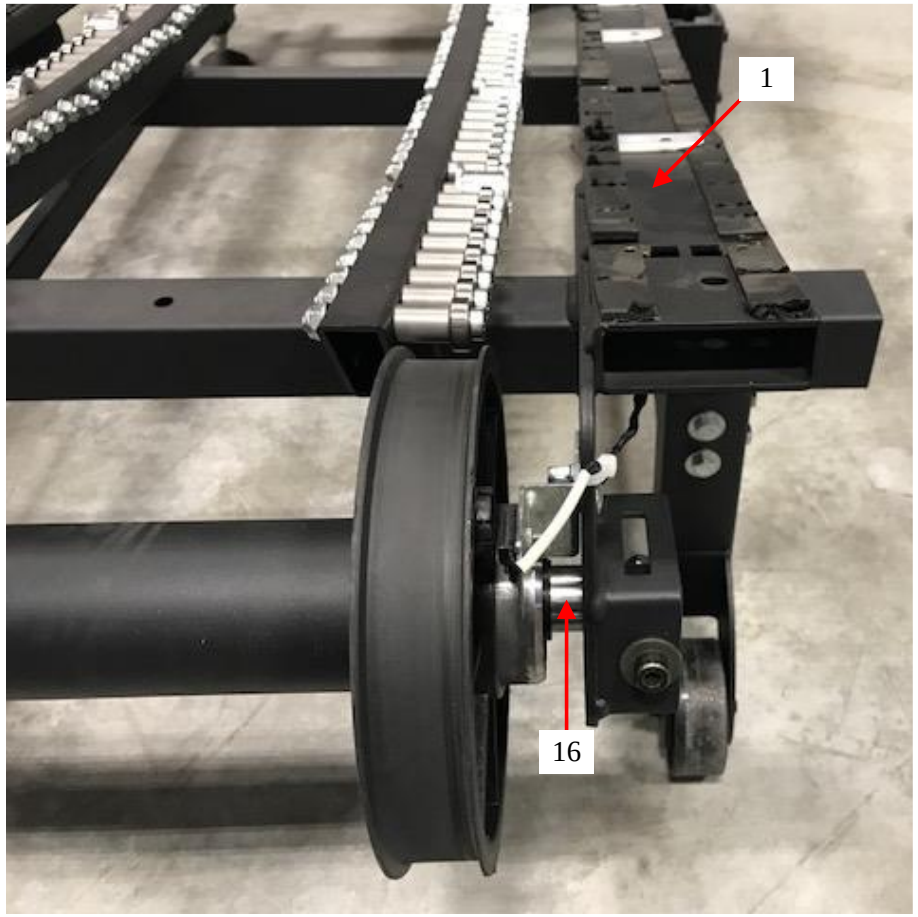

Appendix C – Claim Chart for U.S. Patent No. 10,799,745 ("the '745 Patent")

the '745 Patent	Assault Fitness AirRunner ("the Infringing Product")	
a safety device coupled to the running belt, the safety device at least partially supported by the support element,	A "safety device coupled to the running belt" and "at least partially supported by the support element" is literally present in the Infringing Product. The Court construed the term "safety device" as "a device that includes the elements recited and restricts rotation to allow for only one rotational direction of movement." *See* Dkt. 59 at 23. As shown, a safety device [13] is coupled to the running belt [11], and is at least partially supported by the support element [16]. As defined in the specification, and construed by the Court, "the term 'coupled' means the joining of two members directly or indirectly to one another. Such joining may be stationary or moveable in nature … . Such joining may be achieved with the two members or the two members and any additional intermediate members." *See* '745 Patent at col. 32, ll. 22-27; Dkt. 59 at 8, n.1. Thus, the safety device [13] may be coupled to the running belt [11] directly or indirectly through one or more	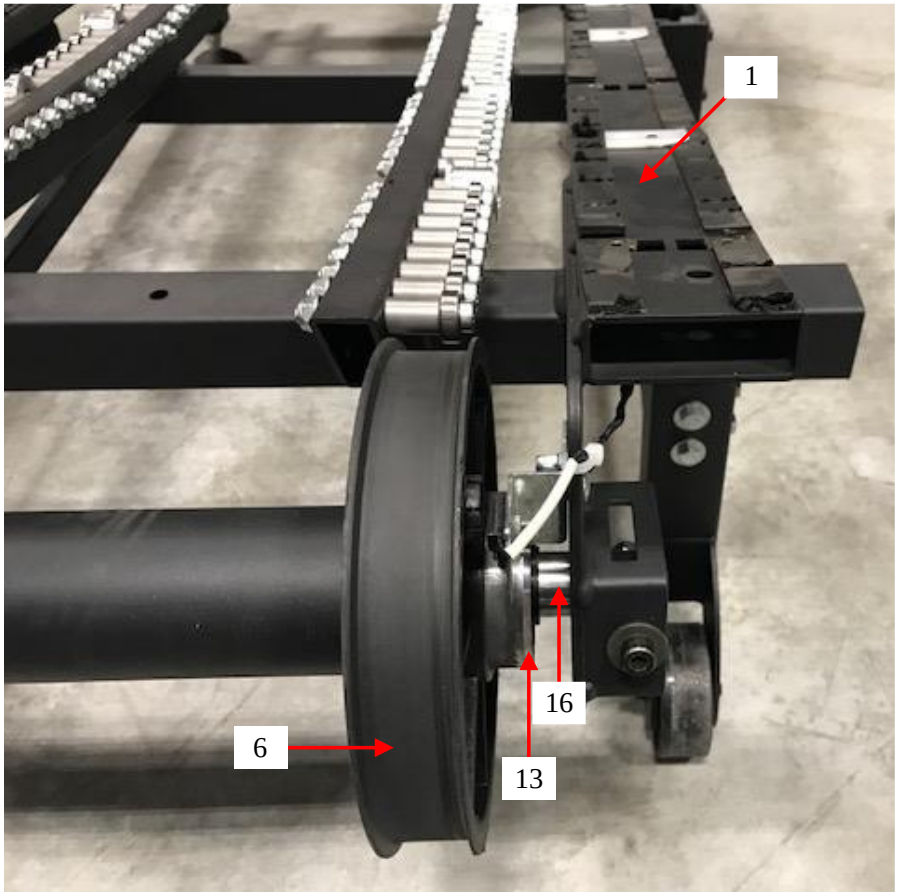

Appendix C – Claim Chart for U.S. Patent No. 10,799,745 ("the '745 Patent")

the '745 Patent	Assault Fitness AirRunner ("the Infringing Product")	
	intermediate members (*e.g.*, via the front running belt pulley [6]). *See also, e.g.*, LCF002474 (illustrating the "One-Way Clutch Bearing (*i.e.*, Safety Device)" is coupled onto the "Front Shaft" [support element 16]").	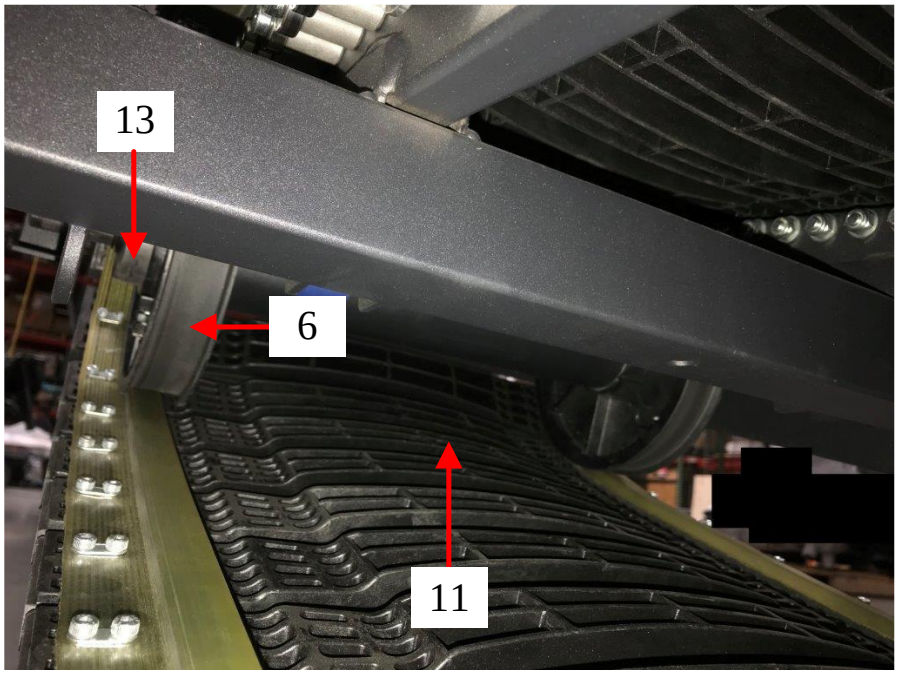

Appendix C – Claim Chart for U.S. Patent No. 10,799,745 ("the '745 Patent")

the '745 Patent	Assault Fitness AirRunner ("the Infringing Product")	
		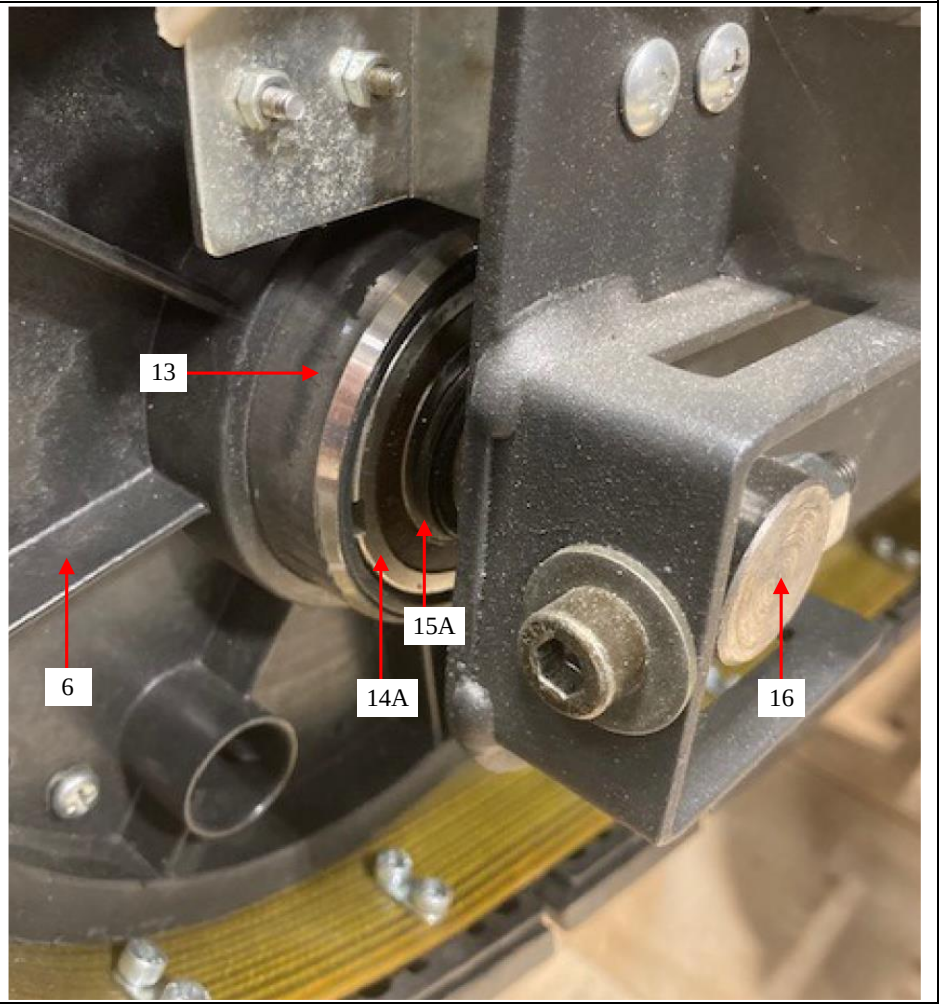

Appendix C – Claim Chart for U.S. Patent No. 10,799,745 ("the '745 Patent")

the '745 Patent	Assault Fitness AirRunner ("the Infringing Product")	
wherein the safety device includes a first safety race element and a second safety race element, wherein at least one of the first and second safety race elements is adapted for rotation relative to the frame, and wherein one of the first and second safety race elements substantially surrounds the other of the one of the first and second safety race elements;	A "safety device" having "a first safety race element and a second safety race element" where "at least one of the first and second safety race elements is adapted for rotation relative to the frame" and "one of the first and second safety race elements substantially surrounds the other of the one of the first and second safety race elements" is literally present in the Infringing Product. The Court construed the term "race element" to mean "one of the inner or outer rings of a bearing." *See* Dkt. 59 at 33. The safety device [13] includes a one-way bearing assembly. *See* LCF001767 (at row 75 "BEARING, ONE-WAY") and LCF002474 (describing the included One-Way Clutch Bearing as "*i.e.*, the safety device"). Specifically, the safety device [13] includes an Altra Industrial Motion brand Combined Bearing/Freewheel type CSK 25 PP "sprag type freewheel[]." *See, e.g.*, Altra Industrial Motion, *Overrunning Clutches and Backstops* at p. 16 (2017). The CSK 25 PP has	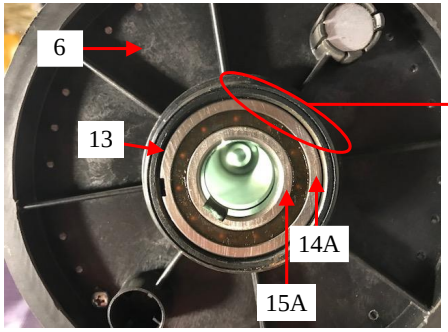 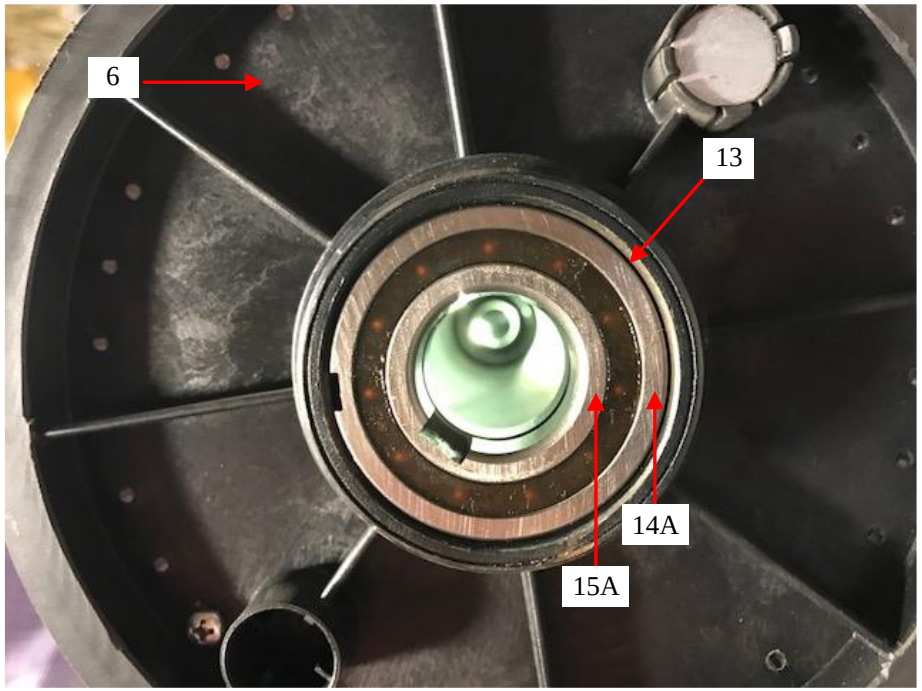

the '745 Patent	Assault Fitness AirRunner ("the Infringing Product")	
	"both [an] inner [15A] and outer race [14A]." *Id.* at p. 4. Therefore, the safety device [13] includes a first safety race element [14A] (*i.e.,* the "outer race") and a second safety race element [15A] (*i.e.,* the "inner race"). The first safety race element [14A] substantially surrounds the second safety race element [15A]. "[A]t least one of the first and second safety race elements [that] is adapted for rotation relative to the frame" can mean that (i) only the first safety race element is adapted for rotation relative to the frame; (ii) only the second safety race element is adapted for rotation relative to the frame; or (iii) both of the first and second safety race elements are adapted for rotation relative to the frame. In this configuration, it is the first safety race element [14A] that is "adapted for rotation relative to the frame." *See also, e.g.,* LCF002474 (illustrating the one-way clutch bearing with an outer ring *i.e.,*	

Appendix C – Claim Chart for U.S. Patent No. 10,799,745 ("the '745 Patent")

the '745 Patent	Assault Fitness AirRunner ("the Infringing Product")	
	race substantially surrounding an inner ring *i.e.*, race).	
wherein one of the first and second safety race elements and the running belt freely rotates in a first direction of rotation relative to the frame, however, in a second direction of rotation, opposite the first direction of rotation, the one of the first and second safety race elements is substantially prevented from rotation relative to the frame to substantially prevent rotation of the running belt relative to the frame.	"[O]ne of the first and second safety race elements and the running belt freely rotates in a first direction of rotation relative to the frame" and "in a second direction of rotation, opposite the first direction of rotation, the one of the first and second safety race elements is substantially prevented from rotation relative to the frame to substantially prevent rotation of the running belt relative to the frame" is literally present in the Infringing Product. The Court construed the term "substantially prevent[]" as "restricts rotation to allow for only one rotational direction of movement." *See* Dkt. 59 at 23. The safety device [13] includes a one-way bearing assembly. *See* LCF001767 (at row 75 "BEARING, ONE-WAY") and LCF002474 (describing the included One-Way Clutch Bearing as "*i.e.*, the safety device"). Specifically, the safety device [13] includes an Altra Industrial Motion brand	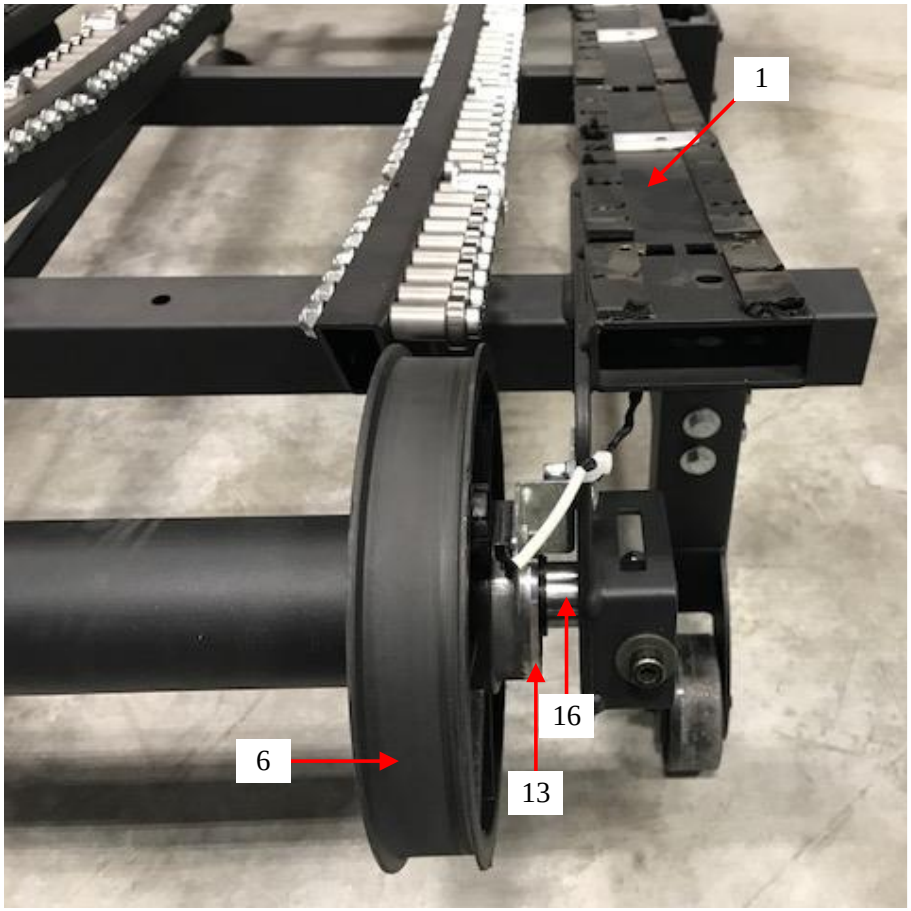

Appendix C – Claim Chart for U.S. Patent No. 10,799,745 ("the '745 Patent")

the '745 Patent	Assault Fitness AirRunner ("the Infringing Product")	
	Combined Bearing/Freewheel type CSK 25 PP "sprag type freewheel[]." *See, e.g.*, Altra Industrial Motion, *Overrunning Clutches and Backstops* at p. 16 (2017). The CSK 25 PP has "both [an] inner and outer race," *id*. at p. 4, and "locking elements [] positioned between [the] outer and [the] inner race which effect engaging and disengaging." *Id*. at p. 4. As such, the CSK 25 PP "allows rotation in one direction only ... . The freewheel prevents reverse rotation if the drive is disconnected [*i.e.*, disengaged] ... ." *Id*. at p. 3. Because the first safety race element [14A] of the safety device [13] is coupled to the running belt [11] via the front running belt pulley [6] and the safety device [13] "allows rotation in one direction only," *id*., the first safety race element [14A] and the running belt [11] are freely rotatable in a first direction relative to the frame [1]. However, in a second direction of rotation opposite the first direction of rotation, "engagement … [occurs]	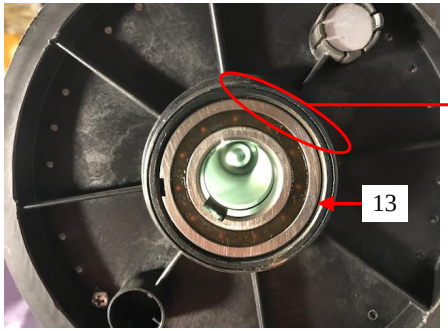 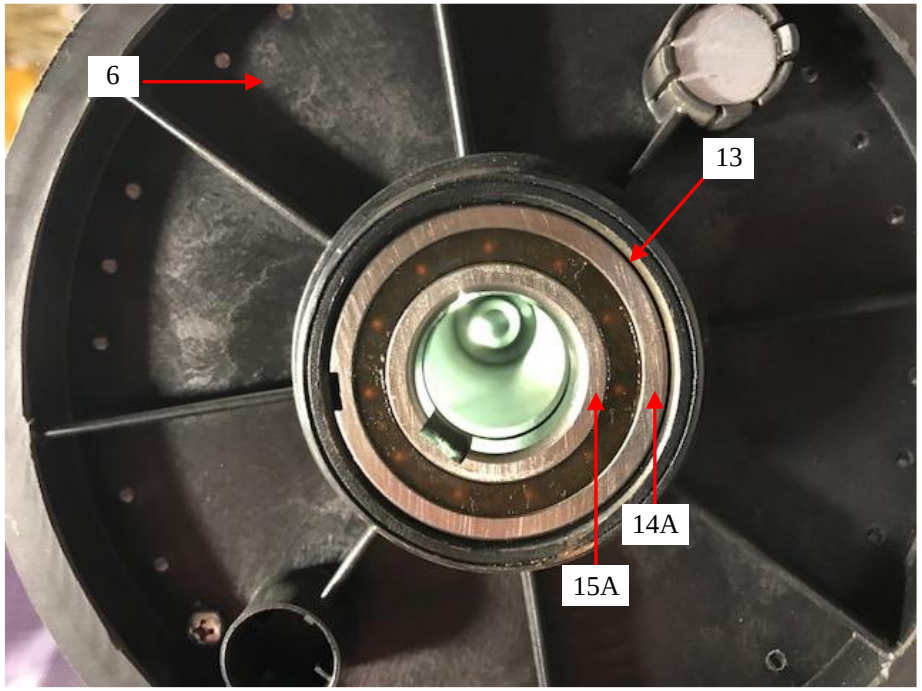

the '745 Patent	Assault Fitness AirRunner ("the Infringing Product")	
	according to the relative motion of the" first and second safety race elements [14A] and [15A], *id*. at p. 5, to substantially "prevent[] [a] reverse rotation," *id*. at p. 3, of the first safety race element [14A] and the running belt [11] relative to the frame [1]. The safety device [13] thus "restricts rotation to allow for only one rotational direction of movement." *See* LCF002474 (describing how the "One-Way Clutch Bearing (*i.e.*, the Safety Device)" in combination with the "Front Shaft" [support element 16] allows the "Front Roller Subassembly" to rotate around the "Front Shaft" [*i.e.*, the shaft internal to shaft 4] in only one direction.").	
4. The treadmill of claim 1, wherein the first and second safety race elements of the safety device at least partly form a one-way bearing.	The "first and second safety race elements of the safety device" at least partly forming a "one-way bearing" is literally present in the Infringing Product. The safety device [13] includes a one-way bearing assembly. *See* LCF001767 (at row 75 "BEARING, ONE-WAY") and	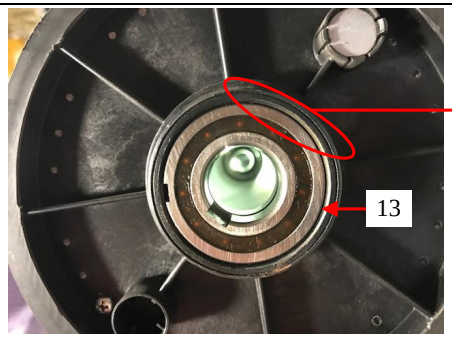

Appendix C – Claim Chart for U.S. Patent No. 10,799,745 ("the '745 Patent")

the '745 Patent	Assault Fitness AirRunner ("the Infringing Product")	
	LCF002474 (describing the included One-Way Clutch Bearing as "*i.e.*, the safety device"). Specifically, the safety device [13] includes an Altra Industrial Motion brand type CSK 25 PP bearing. The CSK 25 PP has "both [an] inner and outer race," *see, e.g.*, Altra Industrial Motion, *Overrunning Clutches and Backstops* at p. 4 (2017), and is a "self-contained ball *bearing* unit[]," *id.* at p. 9 (emphasis added). Specifically, the safety device [13] is a CSK 25 PP "sprag type freewheel[] integrated into a 62 … series ball *bearing*[] ... ." *Id.* at p. 16 (emphasis added). The CSK 25 PP "allows rotation in one direction only ... .The freewheel prevents reverse rotation ... ." *Id.* at p. 3. As shown, the safety device [13] at least partly formed by the first safety race element [14A] and the second safety race element [15A] is a "self-contained ball *bearing* unit[]," *id.* at p. 9 (emphasis added), which "allows rotation in one direction only ... . The freewheel prevents reverse rotation ... ." *Id.* at p. 3. Thus,	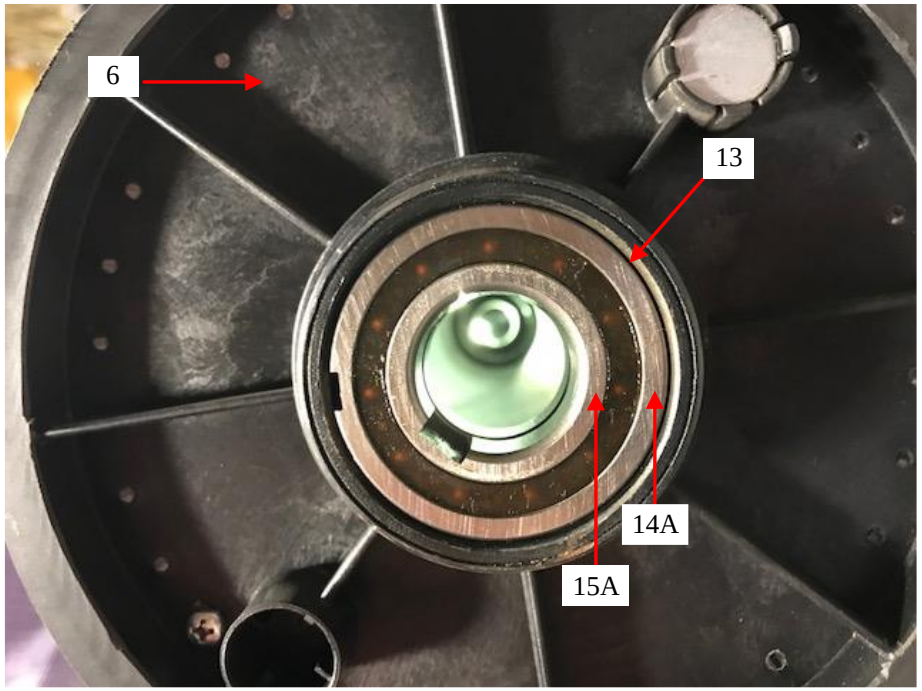

Appendix C – Claim Chart for U.S. Patent No. 10,799,745 ("the '745 Patent")

the '745 Patent	Assault Fitness AirRunner ("the Infringing Product")	
	the safety device is a bearing that allows rotation in only one direction (*i.e.*, a one-way bearing).	
7. The treadmill of claim 1, wherein the treadmill is a manually powered, non-motorized treadmill.	A treadmill that is a "manually powered treadmill" is literally the Infringing Product. The pictured Assault Fitness AirRunner is described in the Assault AirRunner Marketing Brochure, as a "completely manual [treadmill], with no electrical consumption." *See, e.g., AirRunner The Premier Elite Fitness Running Machine* Brochure at p. 2 (2017). *See also, e.g.,* LCF000017 ("The Assault AirRunner completely redefines the manual treadmill…"), LCF000678 (labeling the treadmill as a "Manual Treadmill"), LCF001832 (model described as "AirRunner Manual Treadmill"), LCF001866 (the "Assault AirRunner Warning Label" states "This treadmill is manually operated.").	

Appendix C – Claim Chart for U.S. Patent No. 10,799,745 ("the '745 Patent")

the '745 Patent	Assault Fitness AirRunner ("the Infringing Product")	
8. The treadmill of claim 1, further comprising at least one support foot coupled to the frame, wherein the at least one support foot is adjustable to adjust a relative vertical incline of at least a portion of the treadmill relative to a surface supporting the treadmill.	"[A]t least one support foot coupled to the frame" that is "adjustable to adjust a relative vertical incline of at least a portion of the treadmill relative to a surface supporting the treadmill" is literally present in the Infringing Product. As shown, at least one support foot [27A] is coupled to the frame [1] using a threaded rod [28] which allows vertical adjustment of the support foot [27A] towards and away from the frame [1] to adjust the relative vertical incline of the treadmill relative to the surface supporting the treadmill. *See also, e.g.,* LCF000166 (part no. 557* "Leveling Foot" and 557-A "Leveling Foot Assembly"), and LCF000168 (under Assembly Step Seven "[e]nsure the unit is level and does not rock by adjusting the Stabilizer Leveling Feet").	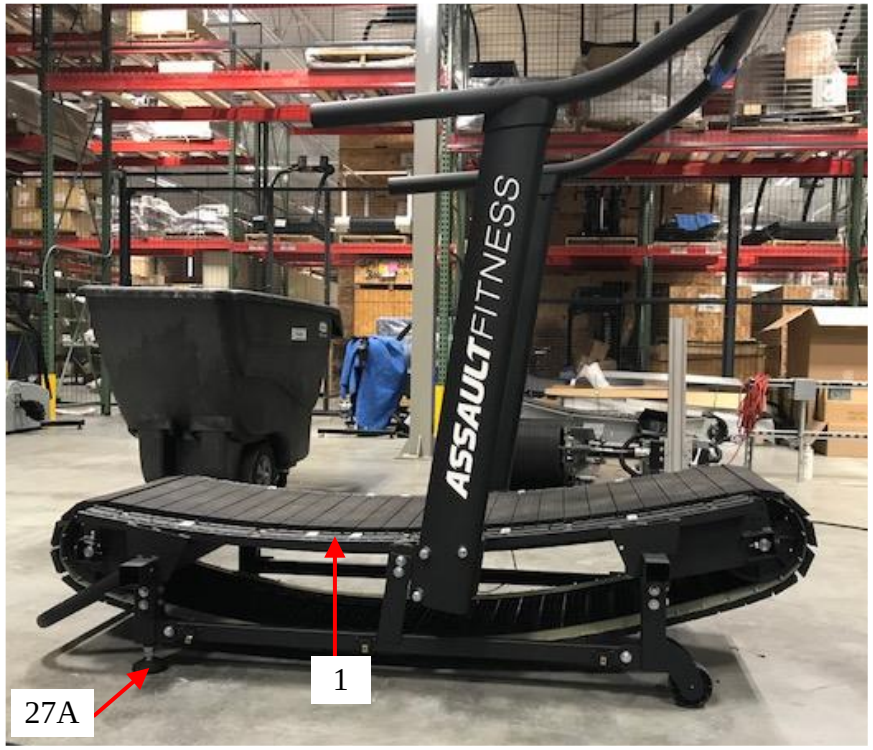 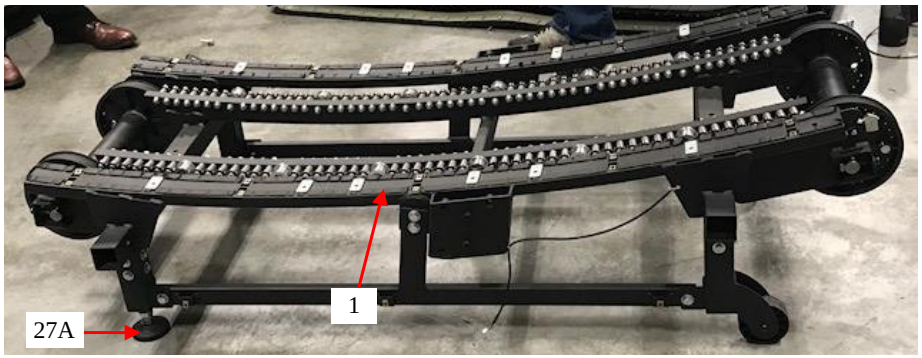

Appendix C – Claim Chart for U.S. Patent No. 10,799,745 ("the '745 Patent")

the '745 Patent	Assault Fitness AirRunner ("the Infringing Product")	
		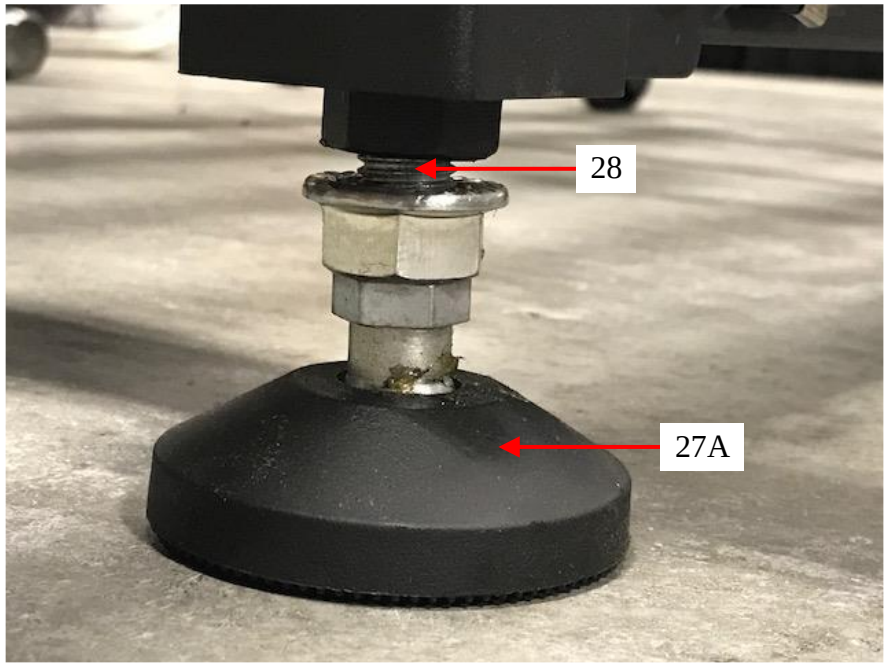

Appendix C – Claim Chart for U.S. Patent No. 10,799,745 ("the '745 Patent")

the '745 Patent	Assault Fitness AirRunner ("the Infringing Product")	
9. The treadmill of claim 1, wherein the frame comprises a left side member, a right side member, and at least one cross-member extending between the left side member and the right side member.	A "left side member, a right side member, and at least one cross-member extending between the left side member and the right side member" is literally present in the Infringing Product. As shown, the frame [1] includes a left side member [18] and a right side member [19]. A cross-member [20] extends between the left side member [18] and the right side member [19]. *See also* LCF002465 (titled "01 – Base Frame (Welded Together).pdf" illustrating the base frame including left side and right side members, and least one cross member extending between the left and right side members).	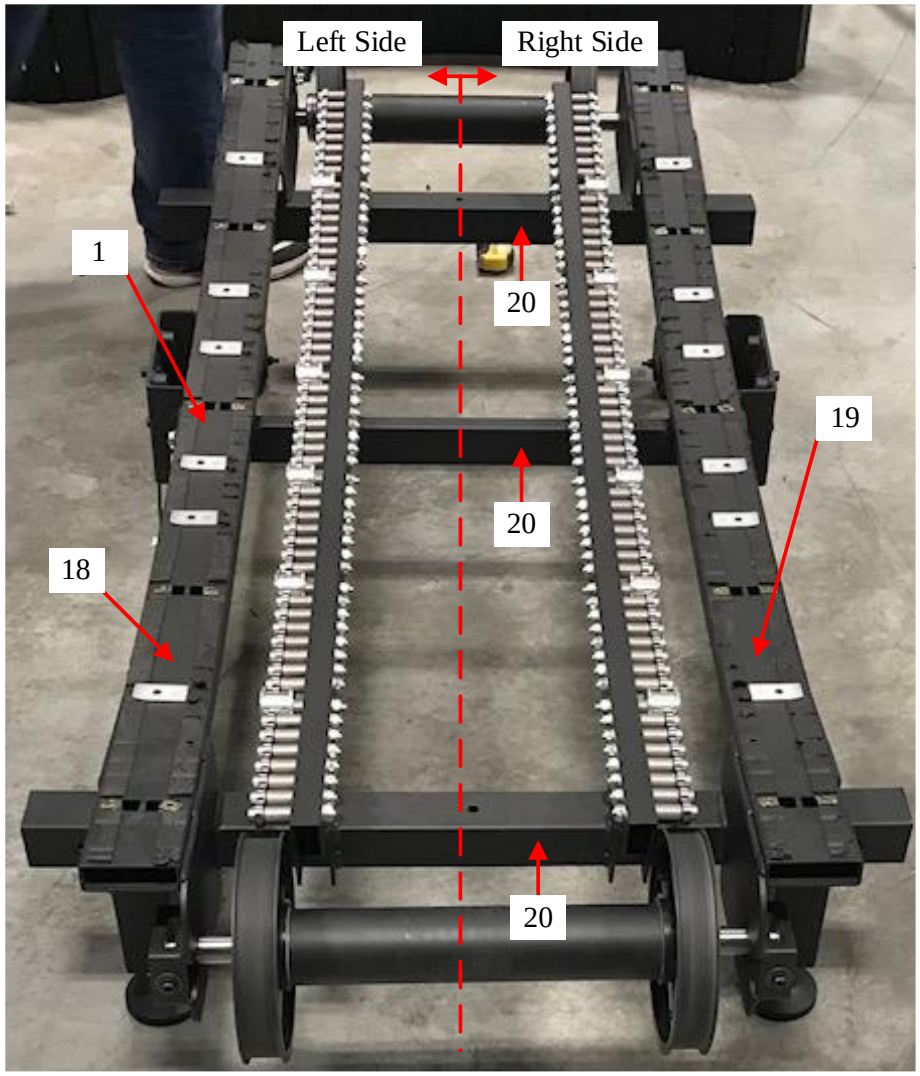

Appendix C – Claim Chart for U.S. Patent No. 10,799,745 ("the '745 Patent")

the '745 Patent	Assault Fitness AirRunner ("the Infringing Product")	
10. A treadmill, comprising:	A "treadmill" is literally the infringing product. The pictured Assault Fitness AirRunner is described in the Assault AirRunner Marketing Brochure, as "one of the lightest weight *treadmills*." *See, e.g.*, *AirRunner The Premier Elite Fitness Running Machine* Brochure at p. 2 (2017). *See also, e.g.*, LCF000017 ("The Assault AirRunner completely redefines the manual treadmill…"), LCF000678 (labeling the treadmill as a "Manual Treadmill"), LCF001832 (model described as "AirRunner Manual Treadmill"), LCF001866 (the "Assault AirRunner Warning Label" states "This treadmill is manually operated.").	

Appendix C – Claim Chart for U.S. Patent No. 10,799,745 ("the '745 Patent")

the '745 Patent	Assault Fitness AirRunner ("the Infringing Product")	
a frame;	A "frame" is literally present in the Infringing Product. As shown, the treadmill includes a frame [1]. *See also, e.g.,* LCF001762 (identifying part no. 501 as "Main Frame"), and (titled "01 – Base Frame (Welded Together).pdf").	

Appendix C – Claim Chart for U.S. Patent No. 10,799,745 ("the '745 Patent")

the '745 Patent	Assault Fitness AirRunner ("the Infringing Product")	
a rotatable element coupled to the frame;	A "rotatable element coupled to the frame" is literally present in the Infringing Product. As shown, the rotatable element can be at least one of the front running belt pulley [6], the rear running belt pulley [7], and/or the plurality of bearings [10], among potentially other components, each of which are coupled to the frame [1]. As defined in the specification, and construed by the Court, "the term 'coupled' means the joining of two members directly or indirectly to one another. Such joining may be stationary or moveable in nature … . Such joining may be achieved with the two members or the two members and any additional intermediate members." *See* '745 Patent at col. 32, ll. 22-27; Dkt. 59 at 8, n.1. Thus, the rotatable element (*i.e.*, the front running belt pulley [6], the rear running belt pulley [7], and/or the plurality of bearings [10], as an example) may be coupled to the frame [1] directly or indirectly through an intermediate member. Therefore	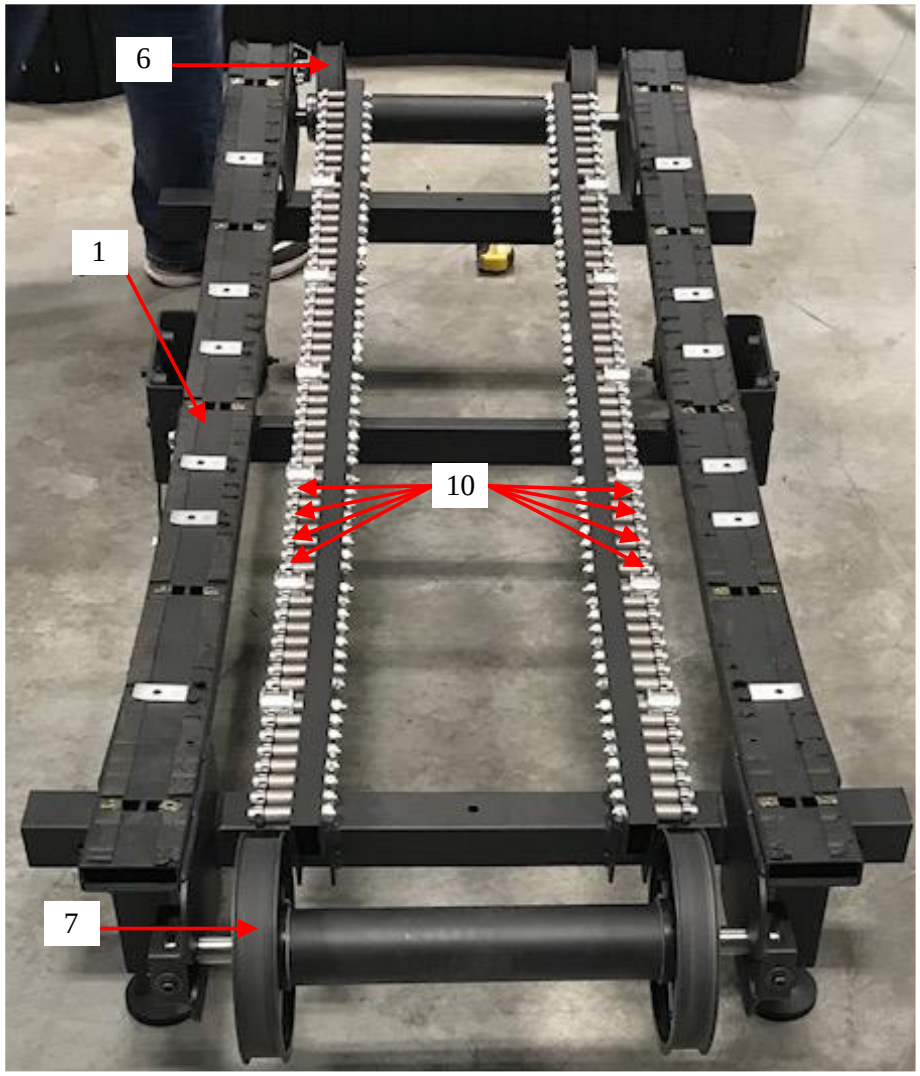

Appendix C – Claim Chart for U.S. Patent No. 10,799,745 ("the '745 Patent")

the '745 Patent	Assault Fitness AirRunner ("the Infringing Product")	
	and as shown, the rotatable element (*i.e.*, the front running belt pulley [6], the rear running belt pulley [7], and/or the plurality of bearings [10], as an example) is coupled to the frame [1]. *See also, e.g.*, LCF000166 (illustrating part no. 511* "Front Roller," part no. 511-A "Front Roller Assembly," part no. 512* "Rear Roller," and part no. 512-A "Rear Roller Assembly," each of which are rotatably coupled to the frame), LCF002470 (illustrating the "Rear Roller Subassembly"), and LCF002475 (illustrating the "Front Roller Subassembly").	

Appendix C – Claim Chart for U.S. Patent No. 10,799,745 ("the '745 Patent")

the '745 Patent	Assault Fitness AirRunner ("the Infringing Product")	
a running belt at least partially supported by the rotatable element, wherein the running belt includes a running surface, at least a portion of which is curved; and	A "running belt at least partially supported by the rotatable element" where "the running belt includes a running surface, at least a portion which is curved" is literally present in the Infringing Product. As shown, a running belt [11] includes a curved running surface [12] which is at least partially supported by the rotatable element (*i.e.*, by at least one of the front running belt pulley [6], the rear running belt pulley [7], and the plurality of bearings [10]). In this regard and as an example, the third picture shows the running belt [11] supported by the plurality of bearings [10] front running belt pulley [6]. A corresponding configuration is provided for the rear running belt pulley [7] and the running belt [11]. *See also, e.g.,* LCF000013 (describing the treadmill as including "…a slat belt running surface…"), LCF000795 (under "Proposed Product Features" "Slatted belt construction: allows for curved running surface" and under "Frame" "Shall be	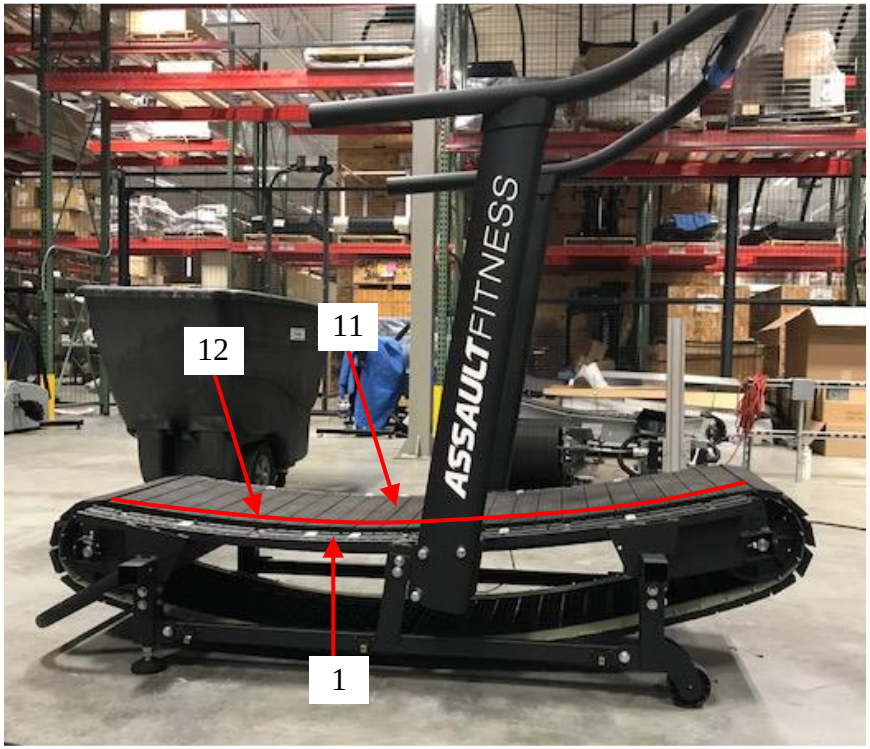 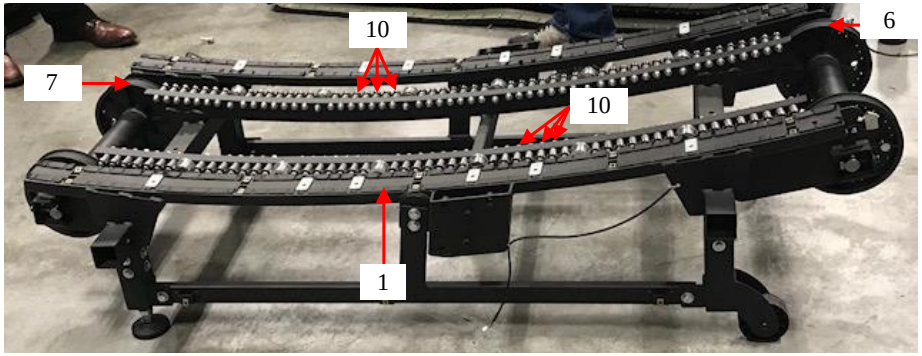

Appendix C – Claim Chart for U.S. Patent No. 10,799,745 ("the '745 Patent")

the '745 Patent	Assault Fitness AirRunner ("the Infringing Product")	
	designed to support a curved running surface,"), LCF000895 (under "Low Impact" "The contoured design…"), LCF02133 (with "Belt Design" described as "Contoured").	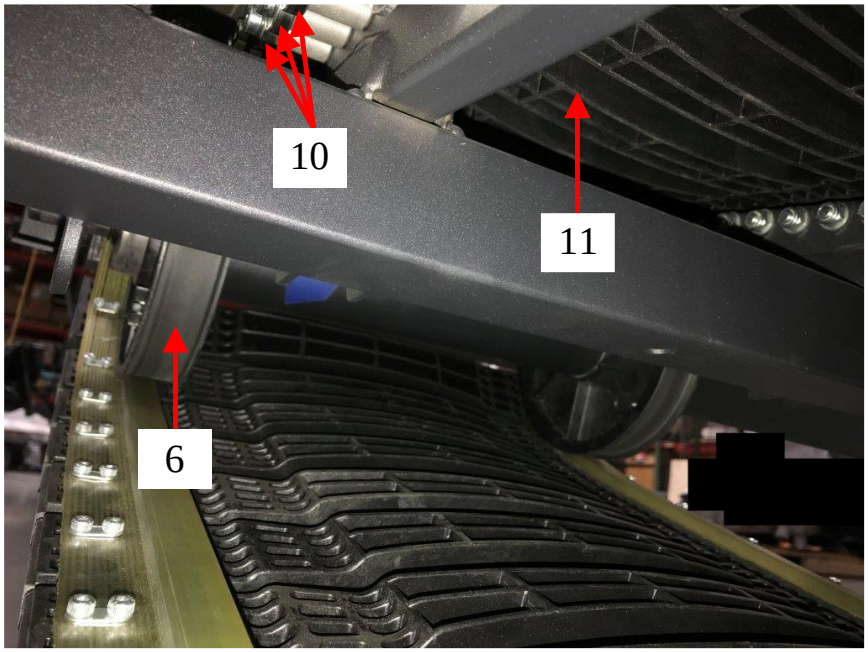

Appendix C – Claim Chart for U.S. Patent No. 10,799,745 ("the '745 Patent")

the '745 Patent	Assault Fitness AirRunner ("the Infringing Product")	
a first safety race element and a second safety race element, both of which are coupled to the running belt, wherein at least one of the first and second safety race elements is adapted for rotation relative to the frame, and wherein one of the first and second safety race elements substantially surrounds the other of the one of the first and second safety race elements;	A "first safety race element and a second safety race element" that are "coupled to the running belt" where "at least one of the first and second safety race elements is adapted for rotation relative to the frame" and "one of the first and second safety race elements substantially surrounds the other of the one of the first and second safety race elements" is literally present in the Infringing Product. The Court construed the term "race element" to mean "one of the inner or outer rings of a bearing." *See* Dkt. 59 at 33. The safety device [13] includes a one-way bearing assembly. *See* LCF001767 (at row 75 "BEARING, ONE-WAY") and LCF002474 (describing the included One-Way Clutch Bearing as "*i.e.*, the safety device"). Specifically, the safety device [13] includes an Altra Industrial Motion brand Combined Bearing/Freewheel type CSK 25 PP "sprag type freewheel[]." *See, e.g.*, Altra Industrial Motion, *Overrunning Clutches and Backstops* at p. 16 (2017). The CSK 25 PP has	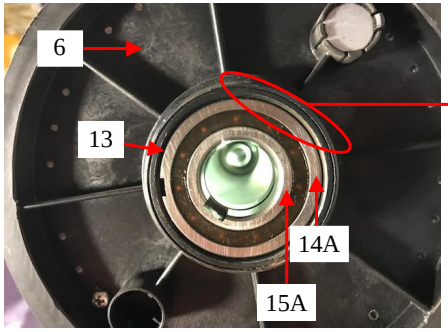 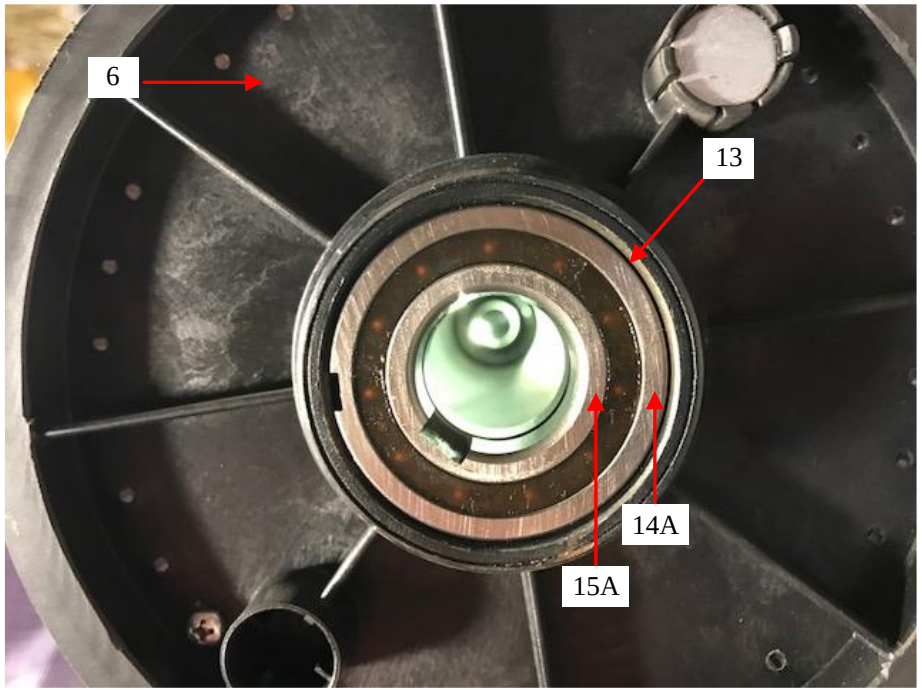

the '745 Patent	Assault Fitness AirRunner ("the Infringing Product")	
	"both [an] inner and outer race," *id*. at p. 4. Therefore, the safety device [13] includes a first safety race element [14A] (*i.e.*, the "outer race") and a second safety race element [15A] (*i.e.*, the "inner race"). The first safety race element [14A] substantially surrounds the second safety race element [15A]. "[A]t least one of the first and second safety race elements [that] is adapted for rotation relative to the frame" can mean that (i) only the first safety race element is adapted for rotation relative to the frame; (ii) only the second safety race element is adapted for rotation relative to the frame; or (iii) both of the first and second safety race elements are adapted for rotation relative to the frame. In this configuration, the first safety race element [14A] is "adapted for rotation relative to the frame.	

Appendix C – Claim Chart for U.S. Patent No. 10,799,745 ("the '745 Patent")

the '745 Patent	Assault Fitness AirRunner ("the Infringing Product")	
wherein one of the first and second safety race elements and the running belt freely rotate in a first direction of rotation relative to the frame, however, in a second direction of rotation, opposite the first direction of rotation, the one of the first and second safety race elements is substantially prevented from rotation relative to the frame to substantially prevent rotation of the running belt relative to the frame.	"[O]ne of the first and second safety race elements and the running belt freely rotate in a first direction of rotation relative to the frame" but "in a second direction of rotation, opposite the first direction of rotation, the one of the first and second safety race elements is substantially prevented from rotation relative to the frame to substantially prevent rotation of the running belt relative to the frame" is literally present in the Infringing Product. The safety device [13] includes an Altra Industrial Motion brand Combined Bearing/Freewheel type CSK 25 PP "sprag type freewheel[]." *See, e.g.*, Altra Industrial Motion, *Overrunning Clutches and Backstops* at p. 16 (2017). The CSK 25 PP has "both [an] inner and outer race," *Id.* at p. 4. The CSK 25 PP "allows rotation in one direction only ... . The freewheel prevents reverse rotation … ." *Id.* at p. 3. Because the first safety race element [14A] is coupled to the running belt [11] via the front running belt pulley [6], and the safety device [13] "allows	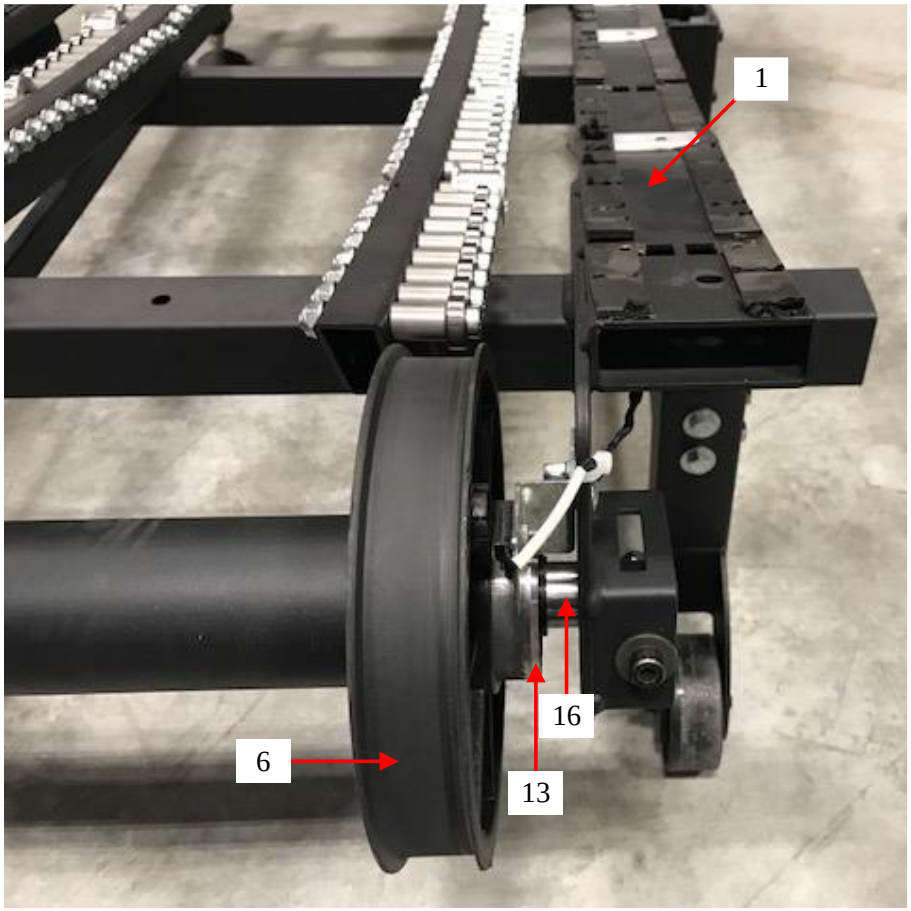

Appendix C – Claim Chart for U.S. Patent No. 10,799,745 ("the '745 Patent")

the '745 Patent	Assault Fitness AirRunner ("the Infringing Product")	
	rotation in one direction only," *id*., the first safety race element [14A] and the running belt [11] are freely rotatable in a first direction relative to the frame [1]. However, in a second direction of rotation opposite the first direction of rotation, "engagement … [occurs] according to the relative motion of the" first and second safety race elements [14A] and [15A], *id*. at p. 5, to substantially "prevent[] [a] reverse rotation," *id*. at p. 3, of the first safety race element [14A] and the running belt [11] relative to the frame [1]. *See also, e.g.*, LCF002474 (describing how the "One-Way Clutch Bearing (*i.e.*, the Safety Device)" in combination with the "Front Shaft" [support element 16] allows the "Front Roller Subassembly" to rotate around the "Front Shaft" in only one direction."), and LCF001867 ("The belt moves freely in only one direction.").	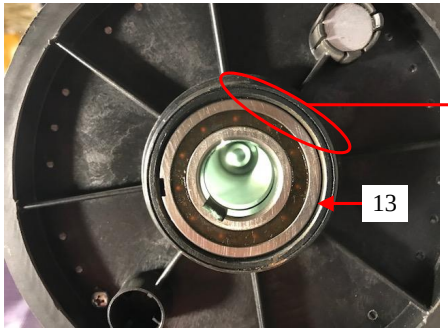 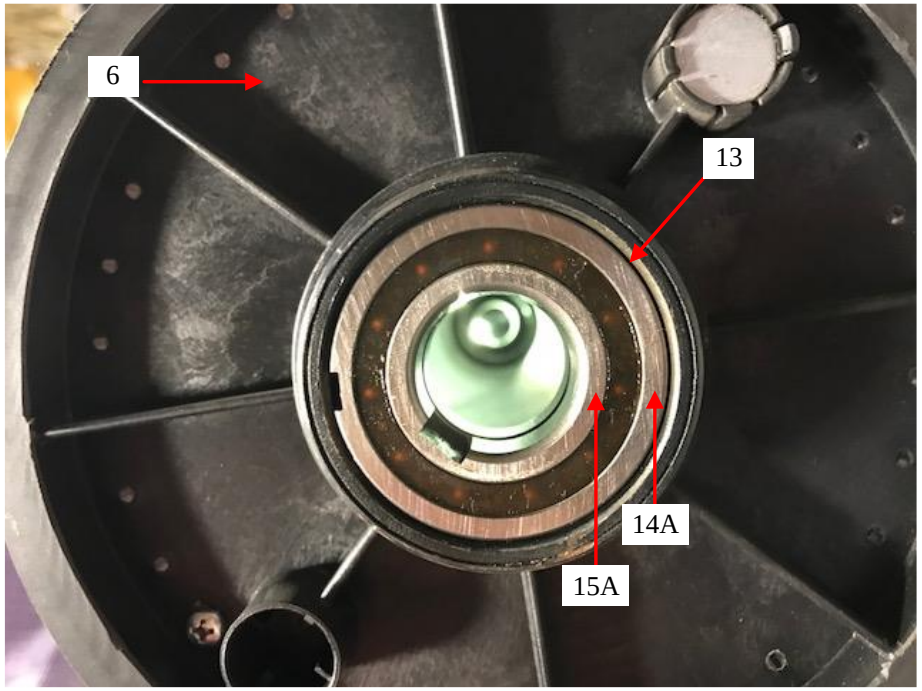

Appendix C – Claim Chart for U.S. Patent No. 10,799,745 ("the '745 Patent")

the '745 Patent	Assault Fitness AirRunner ("the Infringing Product")	
11. The treadmill of claim 10, wherein the treadmill is a manually powered, non-motorized treadmill.	A treadmill that is a "manually powered treadmill" is literally the infringing product. The pictured Assault Fitness AirRunner is described in the Assault AirRunner Marketing Brochure, as a "completely manual [treadmill], with no electrical consumption." *See, e.g., AirRunner The Premier Elite Fitness Running Machine* Brochure at p. 2 (2017). *See also, e.g.,* LCF000017 ("The Assault AirRunner completely redefines the manual treadmill…"), LCF000678 (labeling the treadmill as a "Manual Treadmill"), LCF001832 (model described as "AirRunner Manual Treadmill"), LCF001866 (the "Assault AirRunner Warning Label" states "This treadmill is manually operated.").	

12. The treadmill of claim 10, wherein the first and second safety race elements of the safety device at least partly form a one-way bearing.	The "first and second safety race elements of the safety device" at least partly forming a "one-way bearing" is literally present in the Infringing Product. The safety device [13] includes a one-way bearing assembly. *See* LCF001767 (at row 75 "BEARING, ONE-WAY") and LCF002474 (describing the included One-Way Clutch Bearing as "*i.e.*, the safety device"). Specifically, the safety device [13] includes an Altra Industrial Motion brand type CSK 25 PP. The CSK 25 PP has "both [an] inner and outer race," *see, e.g.*, Altra Industrial Motion, *Overrunning Clutches and Backstops* at p. 4 (2017), and is a "self-contained ball *bearing* unit[]," *id.* at p. 9 (emphasis added). Specifically, the safety device [13] is a CSK 25 PP "sprag type freewheel[] integrated into a 62 … series ball *bearing*[] ... ." *Id.* at p. 16 (emphasis added). The CSK 25 PP "allows rotation in one direction only ... . The freewheel prevents reverse rotation ... ." *Id.* at p. 3. As shown, the safety device [13] at least partly formed by the first	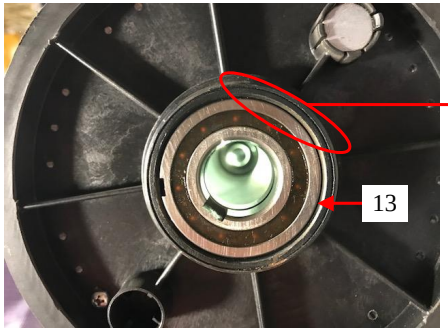 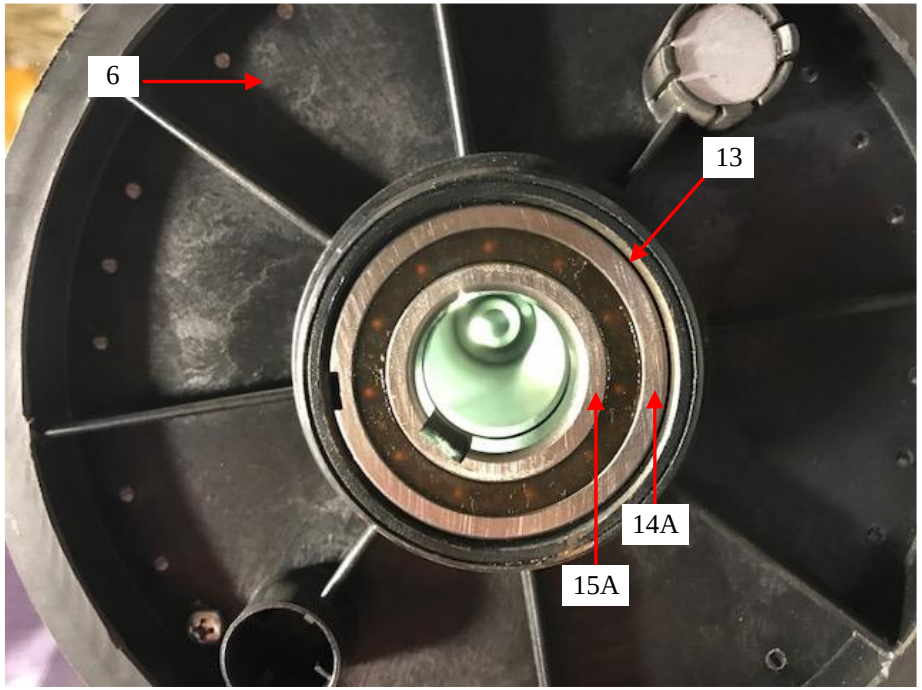

	safety race element [14A] and the second safety race element [15A] is a "self-contained ball *bearing* unit[]," *id.* at p. 9 (emphasis added), which "allows rotation in one direction only ... . The freewheel prevents reverse rotation ... ." *Id.* at p. 3. Thus, the safety device is a bearing that allows rotation in only one direction (*i.e.*, a one-way bearing).	

14. The treadmill of claim 10, wherein the rotatable element comprises a running belt pulley coupled to the frame.	A "rotatable element" which includes "a running belt pulley coupled to the frame" is literally present in the Infringing Product. As shown, the rotatable element can be at least one of a front running belt pulley [6], a rear running belt pulley [7], and/or another rotatable element coupled to the frame [1]. As defined in the specification, and construed by the Court, "the term 'coupled' means the joining of two members directly or indirectly to one another. Such joining may be stationary or moveable in nature … . Such joining may be achieved with the two members or the two members and any additional intermediate members." *See* '745 Patent at col. 32, ll. 22-27; Dkt. 59 at 8, n.1. Thus, the rotatable element can be or include the front or rear running belt pulleys [6] and [7]. Thus, coupling of the front running belt pulley [6] and/or the rear running belt pulley [7] to the frame [1] may be directly or indirectly through an intermediate member. Therefore and as shown, the front running belt pulley [6] and the rear	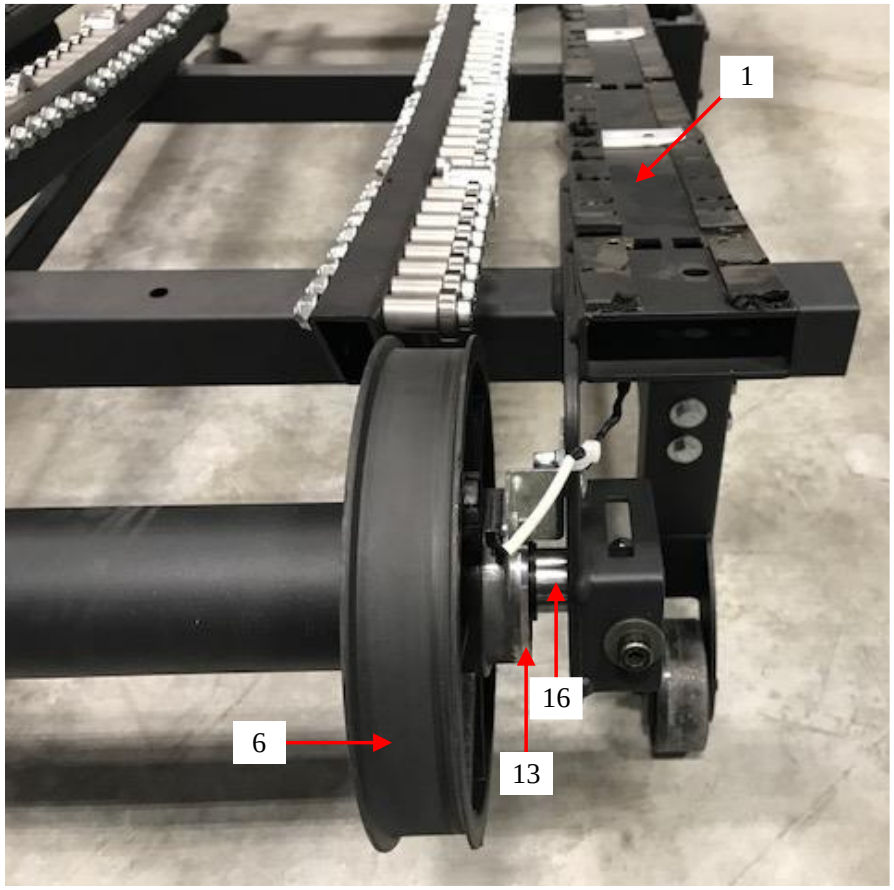

	running belt pulley [7] are coupled to the frame [1]. *See also, e.g.,* LCF000166 (illustrating part no. 511* "Front Roller," part no. 511-A "Front Roller Assembly," part no. 512* "Rear Roller," and part no. 512-A "Rear Roller Assembly," each of which include a pulley), LCF002470 (illustrating the "Rear Roller Subassembly" including a pulley), and LCF002475 (illustrating the "Front Roller Subassembly" including a pulley).	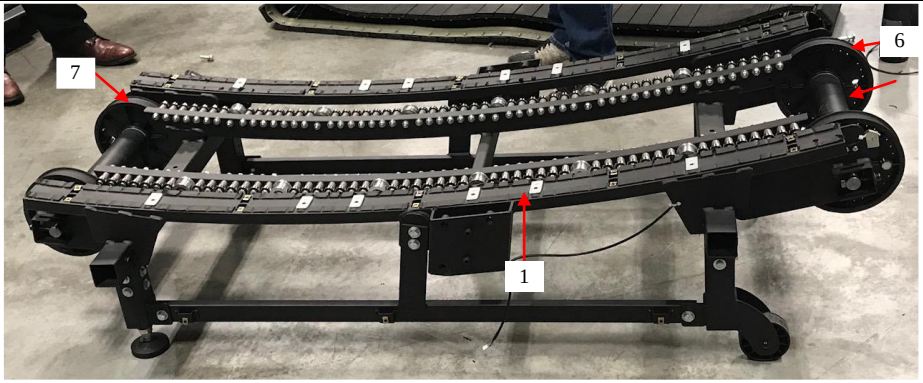

17. The treadmill of claim 10, wherein the rotatable element comprises a plurality of bearings coupled to the frame, the plurality of bearings at least partially supporting the running belt.	A "rotatable element" including "a plurality of bearings coupled to the frame, the plurality of bearings at least partially supporting the running belt" are literally present in the Infringing Product. As shown and mentioned herein, the rotatable element can include a plurality of bearings [10] coupled to the frame [1]. As defined in the specification, and construed by the Court, "the term 'coupled' means the joining of two members directly or indirectly to one another. Such joining may be stationary or moveable in nature … . Such joining may be achieved with the two members or the two members and any additional intermediate members." *See* '745 Patent at col. 32, ll. 22-27; Dkt. 59 at 8, n.1. Thus, the plurality of bearings [10] may be coupled to the frame [1] directly or indirectly through one or more intermediate members. Therefore and as shown, the plurality of bearings [10] are coupled to the frame [1] and at least partially support the running belt [11].	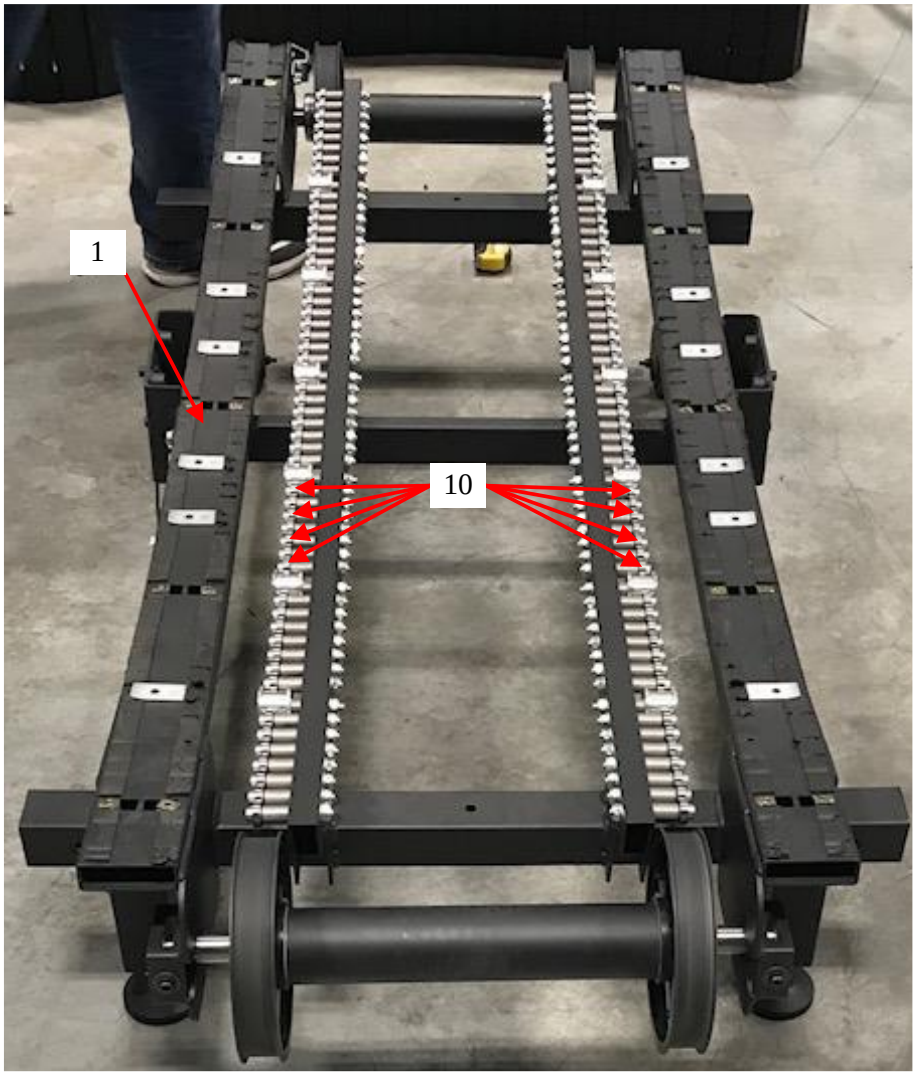

	See also, e.g., LCF000166 (part no. 545* "Belt Support Bearing" and 545-A "Belt Support Bearing Assembly" which correspond to a plurality of bearings [10]), LCF001993 (under "Specifications" "Running Belt Support: 12 Guide Pulleys; 100 Cartridge Bearings"), LCF002133 (under "Components" "Drive System" listed "100 Precision Ball Bearings w/ 12 Roller Guides"), LCF002467 (titled "03 – Base Frame with Bearings – Guide Pulleys – Rollers.pdf" showing a plurality of bearings coupled to the frame).	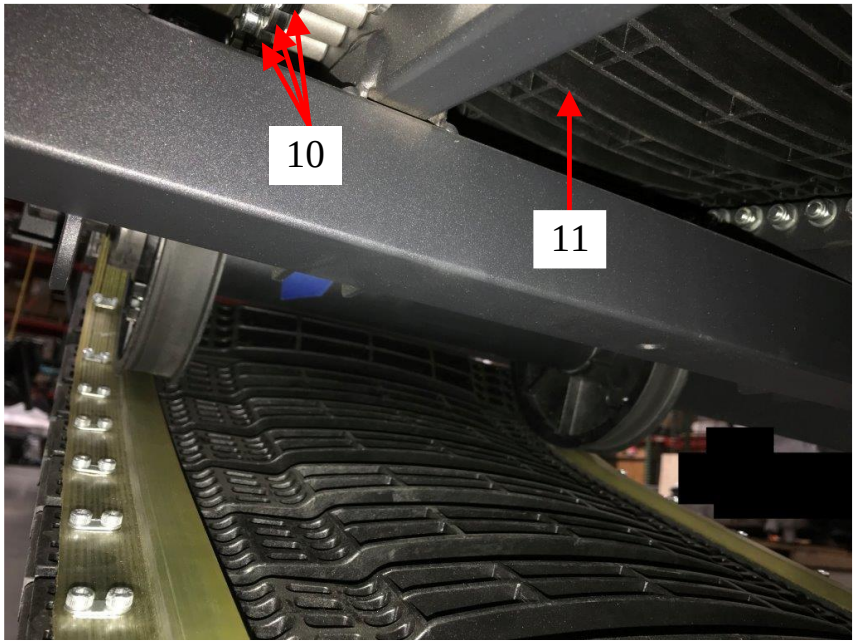

Appendix C – Claim Chart for U.S. Patent No. 10,799,745 ("the '745 Patent")

18. A method, comprising:		
providing a treadmill having a frame with a front end and a rear end;	A "treadmill" having "a frame with a front end and a rear end" is literally present in the infringing product. The pictured Assault Fitness AirRunner is described in the Assault AirRunner Marketing Brochure, as "one of the lightest weight treadmills." *See, e.g.*, *AirRunner The Premier Elite Fitness Running Machine* Brochure at p. 2 (2017). As shown, the frame [1], which designates the entire frame assembly and not a single piece of, for example, metal, has a front end [2] and a rear end [3]. *See also, e.g.,* LCF001762 (identifying part no. 501 as "Main Frame"), and (titled "01 – Base Frame (Welded Together).pdf").	

Appendix C – Claim Chart for U.S. Patent No. 10,799,745 ("the '745 Patent")

		  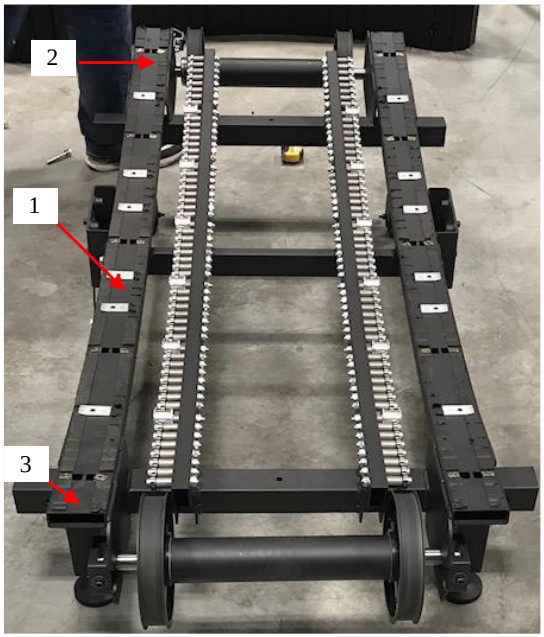

providing a plurality of bearings coupled to the frame, wherein the plurality of bearings define at least a portion of a curved top profile;	A "plurality of bearings coupled to the frame" that "define at least a portion of a curved top profile" are literally present in the Infringing Product. As shown, a plurality of bearings [10] are coupled to the frame [1] and define a curved top profile [21]. As defined in the specification, and construed by the Court, "the term 'coupled' means the joining of two members directly or indirectly to one another. Such joining may be stationary or moveable in nature … . Such joining may be achieved with the two members or the two members and any additional intermediate members." *See* '745 Patent at col. 32, ll. 22-30; Dkt. 59 at 8, n.1. Thus, the plurality of bearings [10] may be coupled to the frame [1] directly or indirectly through an intermediate member. Therefore and as shown, the plurality of bearings [10] are coupled to the frame [1] and define at least a portion of a curved top profile [21]. *See also, e.g.,* LCF000166 (part no. 545* "Belt Support Bearing"	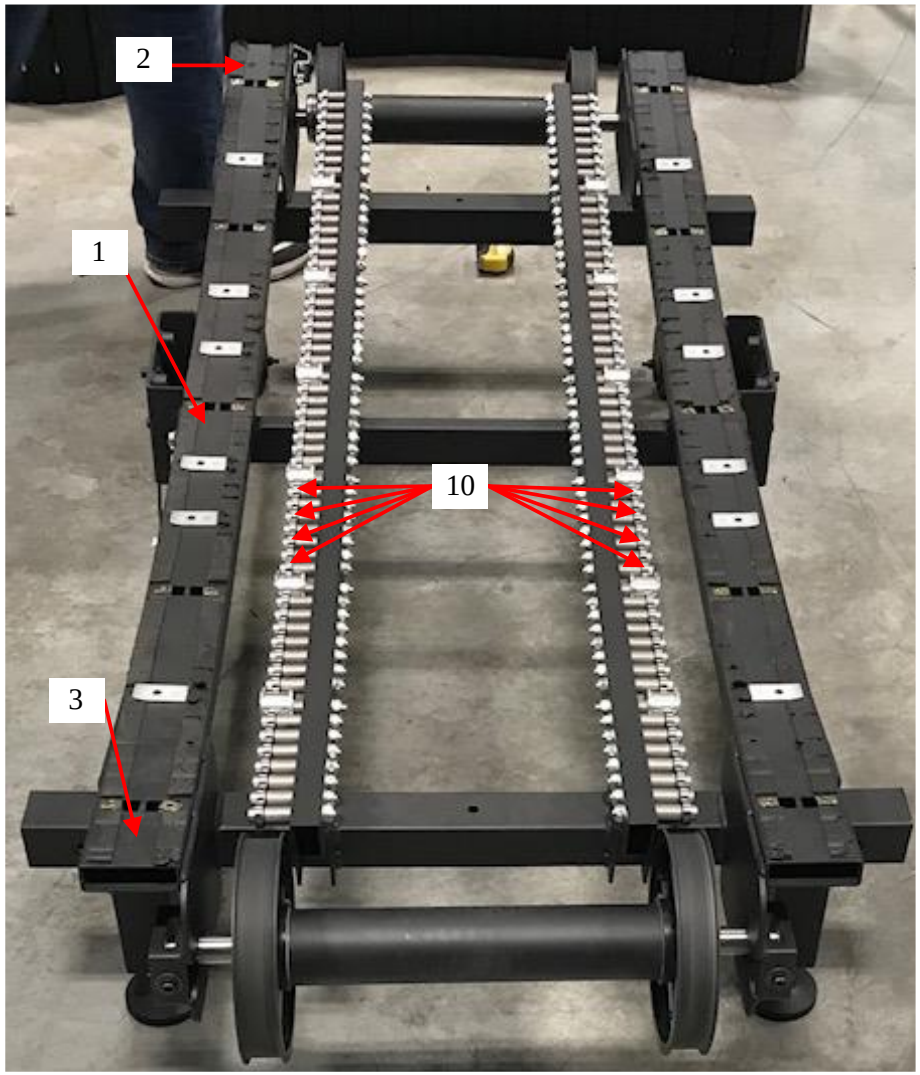

	and 545-A "Belt Support Bearing Assembly" which correspond to a plurality of bearings [10]), LCF001993 (under "Specifications" "Running Belt Support: 12 Guide Pulleys; 100 Cartridge Bearings"), LCF002133 (under "Components" "Drive System" listed "100 Precision Ball Bearings w/ 12 Roller Guides"), LCF002467 (titled "03 – Base Frame with Bearings – Guide Pulleys – Rollers.pdf" showing a plurality of bearings coupled to the frame).	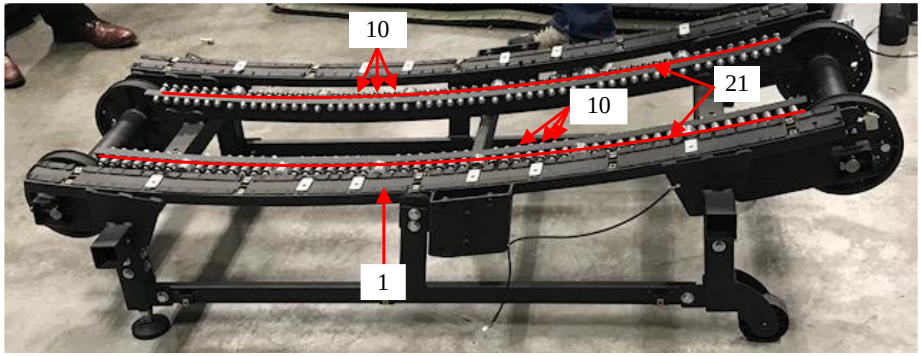

disposing a running belt on the plurality of bearings such that the curved top profile of the plurality of bearings define at least a portion of a curved running surface of the running belt;	A "running belt [disposed] on the plurality of bearings such that the curved top profile of plurality of bearings define at least a portion of a curved running surface of the running belt" is literally present in the Infringing Product. As shown, a running belt [11] is disposed on the plurality of bearings [10] such that the curved top profile [21] defines at least a portion of a curved running surface [12] of the running belt [11]. *See also, e.g.,* LCF000013 (describing the treadmill as including "…a slat belt running surface…"), LCF000795 (under "Proposed Product Features" "Slatted belt construction: allows for curved running surface" and under "Frame" "Shall be designed to support a curved running surface,"), LCF000895 (under "Low Impact" "The contoured design…"), LCF02133 (with "Belt Design" described as "Contoured").	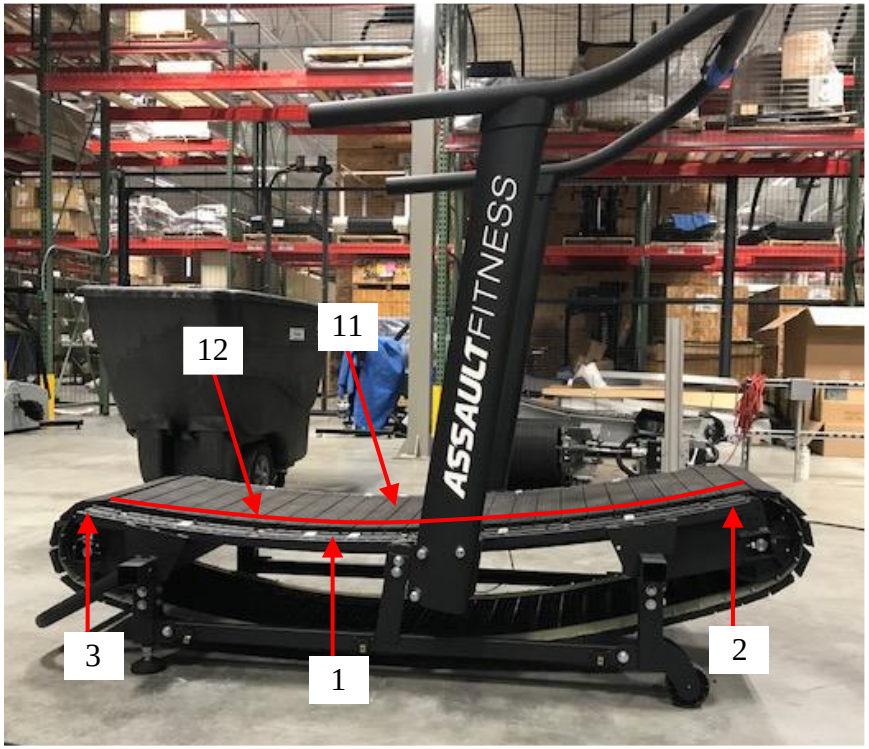 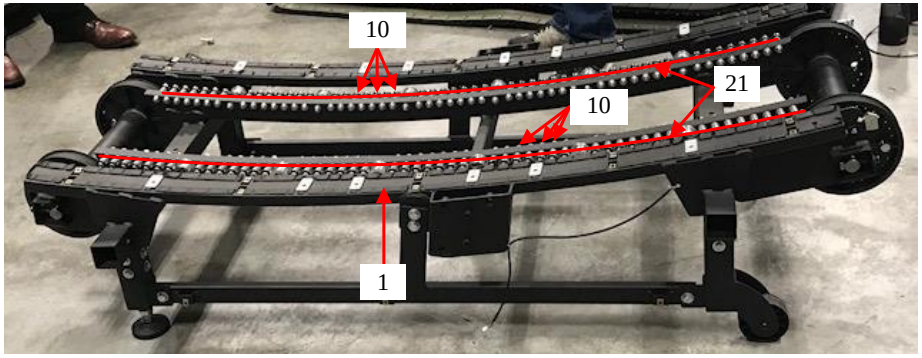

		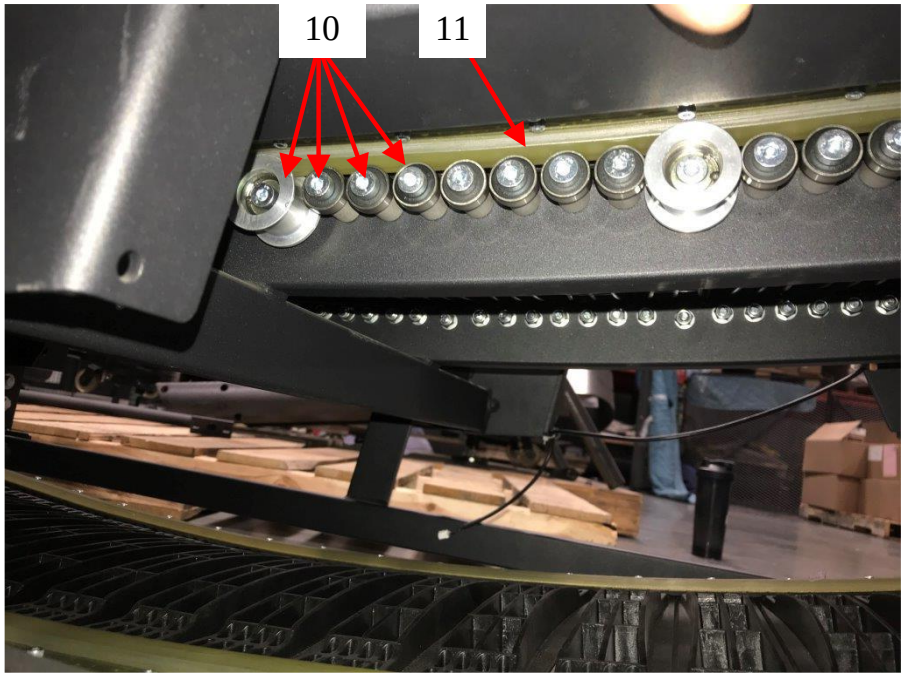 10 11

providing a first safety race element coupled to the frame and to the running belt and a second safety race element coupled to the frame,	A "first safety race element coupled to the frame and to the running belt" and "a second safety race element coupled to the frame" are literally present in the Infringing Product. The Court construed the term "race element" to mean "one of the inner or outer rings of a bearing." *See* Dkt. 59 at 33. The treadmill includes a one-way bearing assembly. *See* LCF001767 (at row 75 "BEARING, ONE-WAY") and LCF002474 (describing the included One-Way Clutch Bearing as "*i.e.*, the safety device"). Specifically, the safety device [13] includes a safety device [13] shown as an Altra Industrial Motion brand Combined Bearing/Freewheel type CSK 25 PP "sprag type freewheel[]." *See, e.g.*, Altra Industrial Motion, *Overrunning Clutches and Backstops* at p. 16 (2017). The CSK 25 PP has "both [an] inner and outer race," *id.* at p. 4. Therefore, the safety device [13] includes a first safety race element [14A] (*i.e.*, the "outer race") and a second safety race	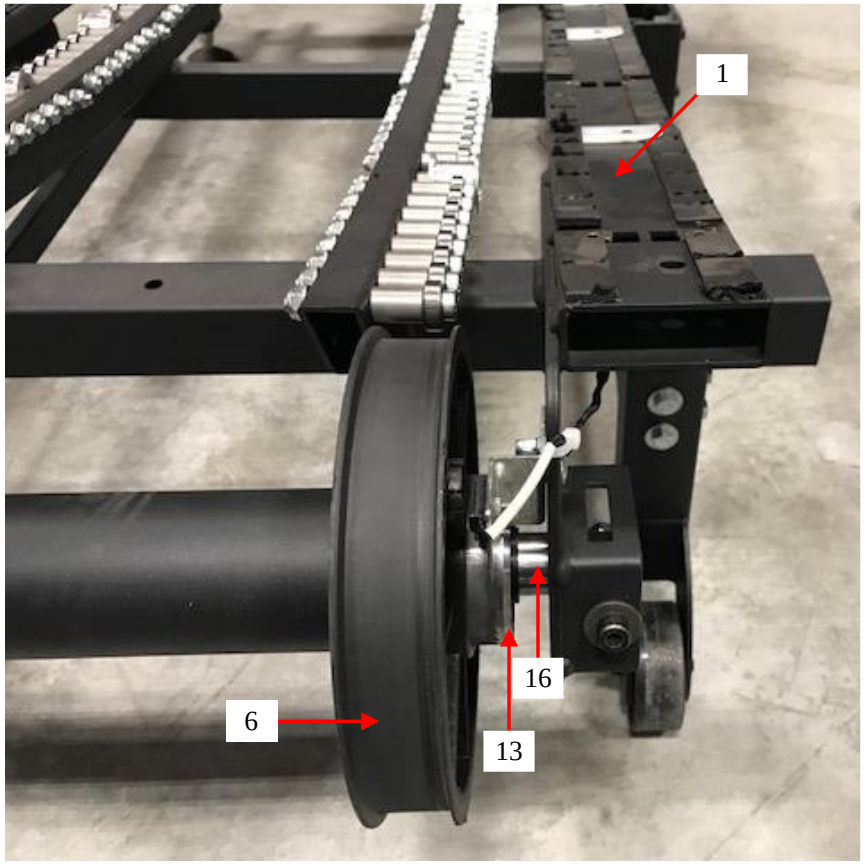 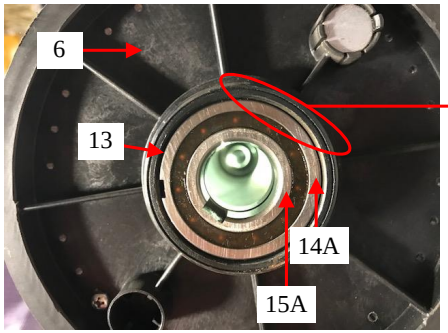

	element [15A] (*i.e.*, the "inner race"). The first safety race element [14A] is coupled to the frame [1] and the running belt [11], while a second safety race element [15A] is coupled to the frame [1]. As defined in the specification, and construed by the Court, "the term 'coupled' means the joining of two members directly or indirectly to one another. Such joining may be stationary or moveable in nature … . Such joining may be achieved with the two members or the two members and any additional intermediate members." *See* '745 Patent at col. 32, ll. 22-30; Dkt. 59 at 8, n.1. Thus, the first safety race element [14A] may be coupled to the frame [1] and the running belt [11], and the second safety race element [15A] to the frame [1], directly or indirectly through one or more intermediate members. Therefore and as shown, the first safety race element [14A] is coupled to the frame [1] and the running belt [11], and the second safety race element [15A] is coupled to the frame [1].	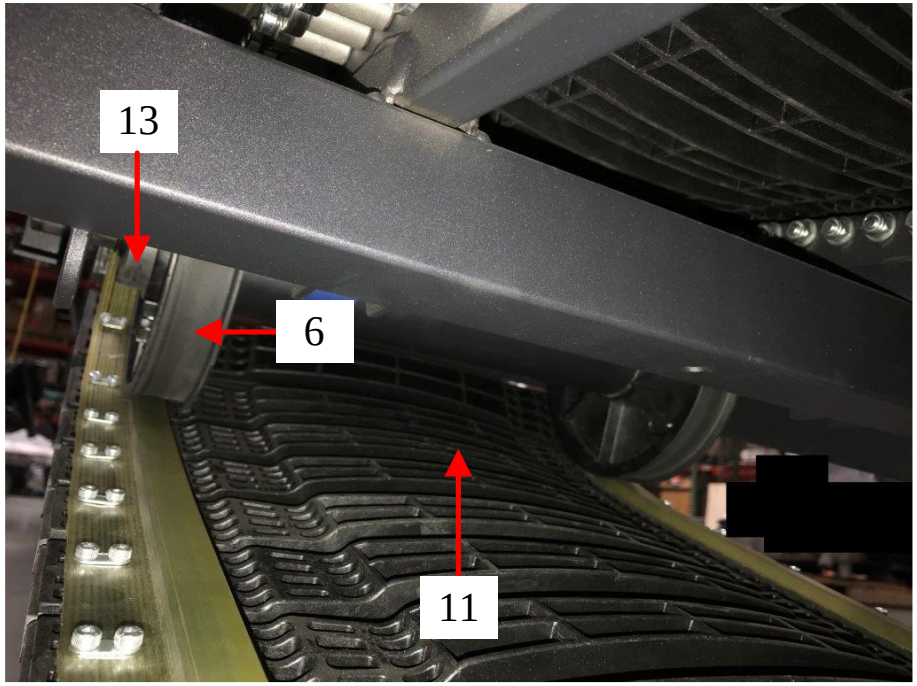

	See also, e.g., LCF002474 (illustrating the first race element *i.e.,* the outer race couples to the "Front Shaft" and the "Front Roller Subassembly" and the second race element *i.e.,* the inner race couples to the "Front Shaft" via the "Shaft Key").	
wherein at least one of the first and second safety elements is adapted for rotation relative to the frame, and wherein one of the first and second safety race elements substantially surrounds the other of the one of the first and second safety race elements;	"[A]t least one of the first and second safety elements" that is "adapted for rotation relative to the frame," and "one of the first and second safety race elements substantially surround[ing] the other of the one of the first and second safety race elements" is literally present in the Infringing Product. The safety device [13] includes a one-way bearing assembly. *See* LCF001767 (at row 75 "BEARING, ONE-WAY") and LCF002474 (describing the included One-Way Clutch Bearing as "*i.e.,* the safety device"). Specifically, the safety device [13] includes an Altra Industrial Motion brand Combined Bearing/Freewheel type CSK 25 PP "sprag type freewheel[]." *See, e.g.,* Altra Industrial Motion, *Overrunning Clutches and Backstops* at p. 16 (2017). The CSK 25 PP has "both [an] inner and outer race,"	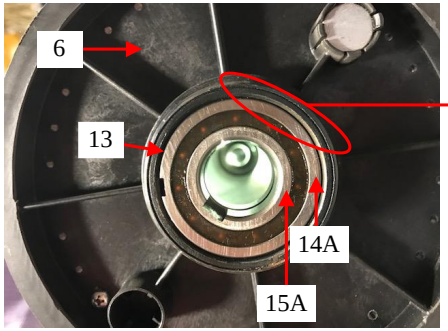

	id at p. 4, and "allows rotation in one direction only … ." *Id.* at p. 3. "[A]t least one of the first and second safety race elements [that] is adapted for rotation relative to the frame" can mean that (i) only the first safety race element is adapted for rotation relative to the frame; (ii) only the second safety race element is adapted for rotation relative to the frame; or (iii) both of the first and second safety race elements are adapted for rotation relative to the frame. In this configuration, the first safety race element [14A] is "adapted for rotation relative to the frame." As shown, the first safety race element [14A] substantially surrounds the second safety race element [15A]. *See also, e.g.,* LCF002474 (illustrating the one-way clutch bearing with an outer ring *i.e.,* race substantially surrounding an inner ring *i.e.,* race).	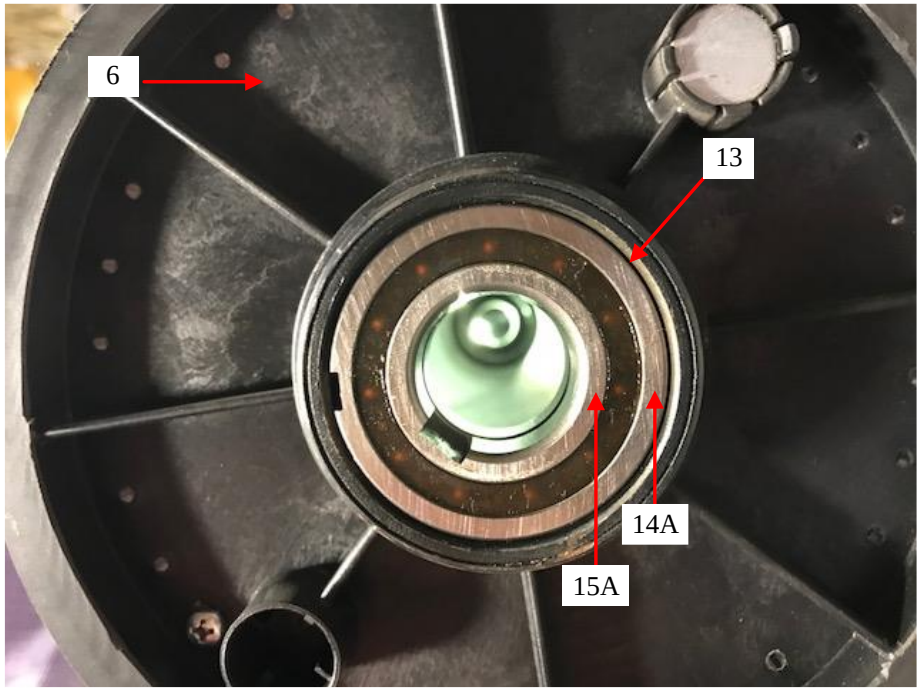

permitting rotation of one of the first and second safety race elements and the running belt in a first direction of rotation; and substantially preventing rotation of the running belt in a second direction, opposite the first direction, by, at least in part, the one of the first and second safety race elements.	"[P]ermitting rotation of one of the first and second safety race elements and the running belt in a first direction of rotation" and "substantially preventing rotation of the running belt in a second direction, opposite the first direction, by, at least in part, the one of the first and second safety race elements" is literally present in the Infringing Product. The Court construed the term "substantially prevent[]" as "restricts rotation to allow for only one rotational direction of movement." *See* Dkt. 59 at 23. The safety device [13] includes a one-way bearing assembly. *See* LCF001767 (at row 75 "BEARING, ONE-WAY") and LCF002474 (describing the included One-Way Clutch Bearing as "*i.e.*, the safety device"). Specifically, the safety device [13] includes an Altra Industrial Motion brand Combined Bearing/Freewheel type CSK 25 PP "sprag type freewheel[]." *See, e.g.*, Altra Industrial Motion, *Overrunning Clutches and Backstops* at p. 16 (2017). The CSK 25 PP "allows rotation in one direction only	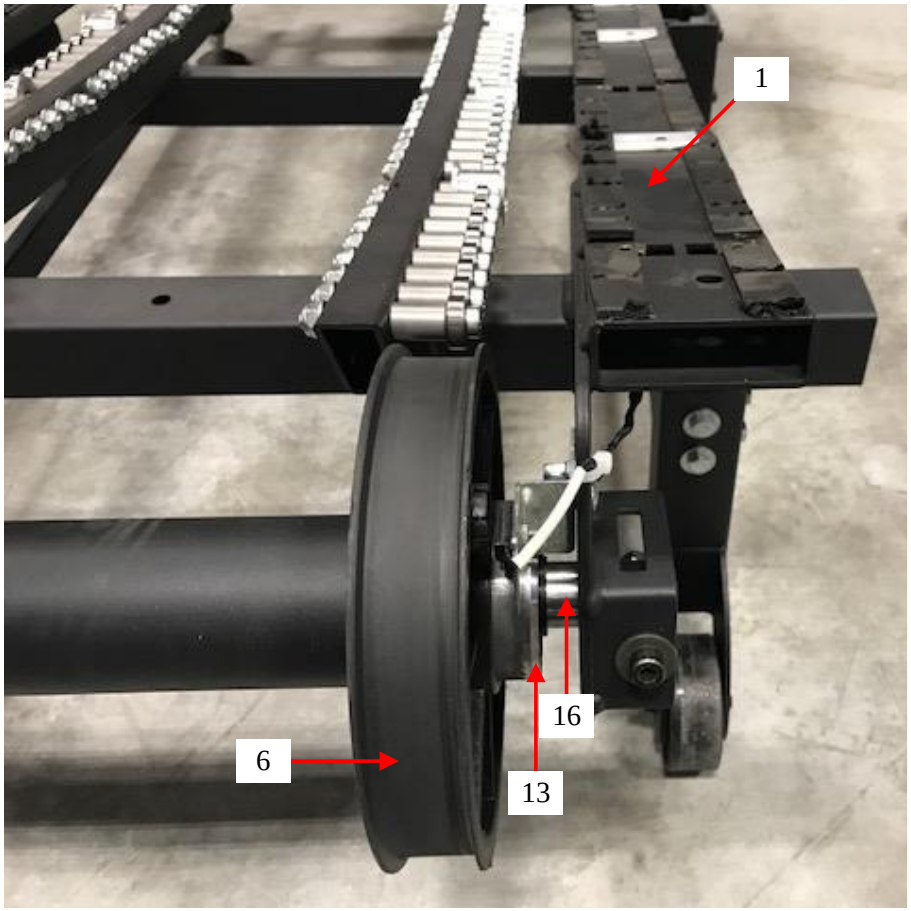

	The freewheel prevents reverse rotation ... ." *Id.* at p. 3. Because the first safety race element [14A] is coupled to the running belt [11] via the front running belt pulley [6] and "allows rotation in one direction," *id.*, the first safety race element [14A] and the running belt [11] are permitted to rotate in a first direction. However, in a second direction of rotation opposite the first direction of rotation, because the safety device [13] "prevents reverse rotation," *id* at p. 3, the first safety race element [14A] and the running belt [11] are substantially prevented from rotation relative to the frame [1]. The safety device [13] thus "restricts rotation to allow for only one rotational direction of movement." *See* LCF002474 (describing how the "One-Way Clutch Bearing (*i.e.*, the Safety Device)" in combination with the "Front Shaft" [support element 16] allows the "Front Roller Subassembly" to rotate around the "Front Shaft" [*i.e.*, the shaft internal to shaft 4] in only one direction.").	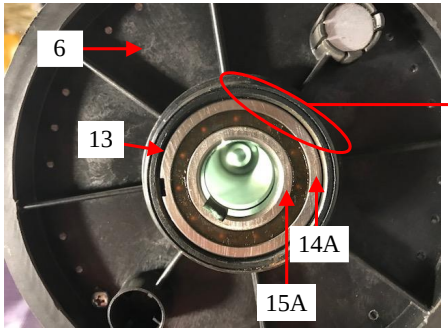 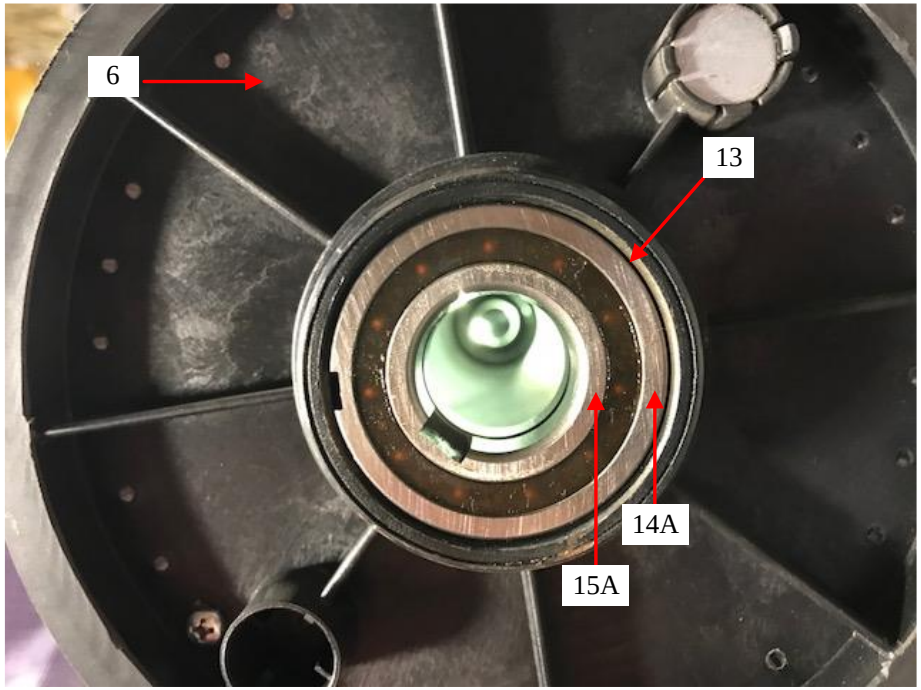

20. The method of claim 18, wherein the treadmill is a manually powered, non-motorized treadmill.	A treadmill that is a "manually powered, non-motorized treadmill" is literally the infringing product. The pictured Assault Fitness AirRunner is described in the Assault AirRunner Marketing Brochure, as a "completely manual [treadmill], with no electrical consumption." *See, e.g., AirRunner The Premier Elite Fitness Running Machine* Brochure at p. 2 (2017). *See also, e.g.,* LCF000017 ("The Assault AirRunner completely redefines the manual treadmill…"), LCF000678 (labeling the treadmill as a "Manual Treadmill"), LCF001832 (model described as "AirRunner Manual Treadmill"), LCF001866 (the "Assault AirRunner Warning Label" states "This treadmill is manually operated.").	

Appendix C – Claim Chart for U.S. Patent No. 10,799,745 ("the '745 Patent")

21. A treadmill, comprising:	A "treadmill" is literally the infringing product. The pictured Assault Fitness AirRunner is described in the Assault AirRunner Marketing Brochure as "one of the lightest weight treadmills." *See, e.g.*, *AirRunner The Premier Elite Fitness Running Machine* Brochure at p. 2 (2017). *See also, e.g.*, LCF000017 ("The Assault AirRunner completely redefines the manual treadmill…"), LCF000678 (labeling the treadmill as a "Manual Treadmill"), LCF001832 (model described as "AirRunner Manual Treadmill"), LCF001866 (the "Assault AirRunner Warning Label" states "This treadmill is manually operated.").	

a frame;	A "frame" is literally present in the Infringing Product. As shown, the treadmill includes a frame [1]. *See also, e.g.,* LCF001762 (identifying part no. 501 as "Main Frame"), and (titled "01 – Base Frame (Welded Together).pdf").	

a rotatable element coupled to the frame;	A "rotatable element coupled to the frame," is literally present in the Infringing Product. As shown, the at least one rotatable element can be a front running belt pulley [6], a rear running belt pulley [7], and/or a plurality of bearings [10] among potentially other components, each of which are coupled to the frame [1]. As defined in the specification, and construed by the Court, "the term 'coupled' means the joining of two members directly or indirectly to one another. Such joining may be stationary or moveable in nature … . Such joining may be achieved with the two members or the two members and any additional intermediate members." *See* '745 Patent at col. 32, ll. 22-27; Dkt. 59 at 8, n.1. Thus, the rotatable element (*i.e.*, the front running belt pulley [6], the rear running belt pulley [7], and/or the plurality of bearings [10], as an example) may be coupled to the frame [1] directly or indirectly through an intermediate member. Therefore and as shown, the rotatable element (*i.e.*, the front running	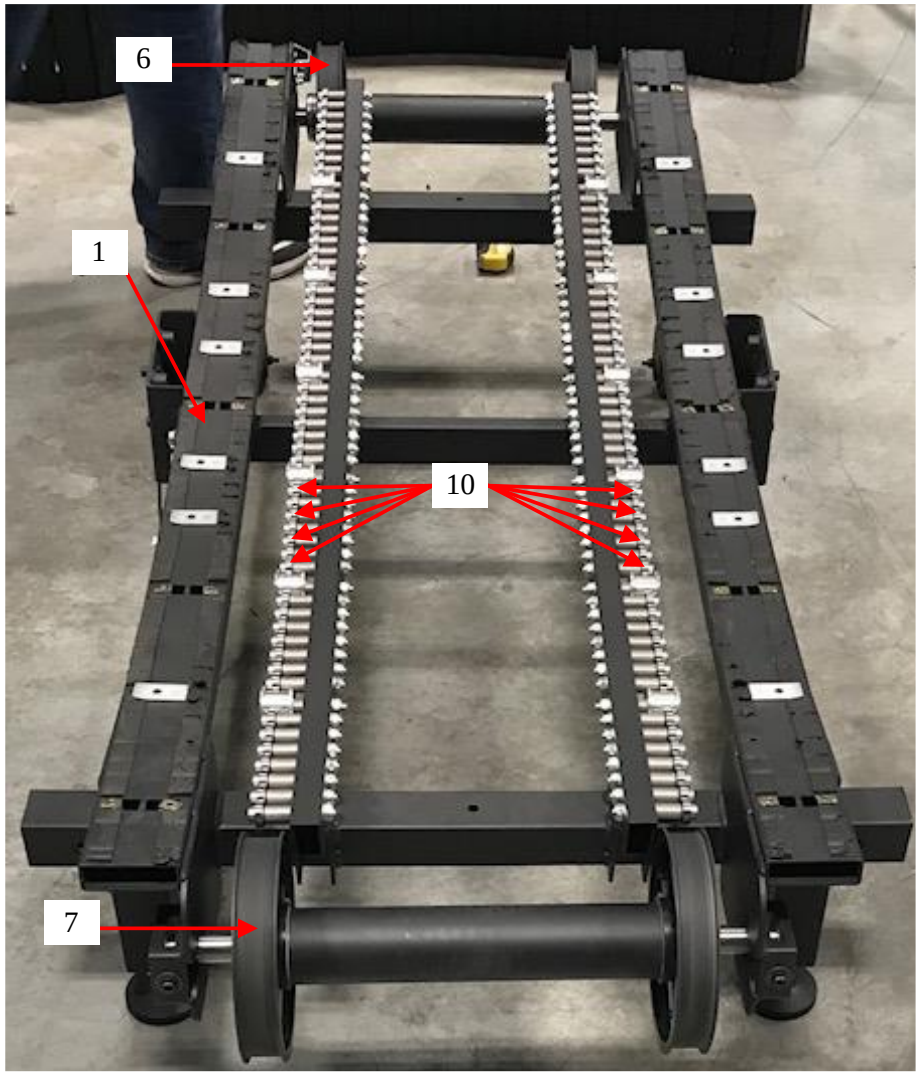

	belt pulley [6], the rear running belt pulley [7], and/or the plurality of bearings [10], as an example) is coupled to the frame [1]. *See also, e.g.,* LCF000166 (illustrating part no. 511* "Front Roller," part no. 511-A "Front Roller Assembly," part no. 512* "Rear Roller," and part no. 512-A "Rear Roller Assembly," each of which rotatably coupled to the frame), LCF002470 (illustrating the "Rear Roller Subassembly"), and LCF002475 (illustrating the "Front Roller Subassembly"), LCF000166 (part no. 545* "Belt Support Bearing" and 545-A "Belt Support Bearing Assembly" which correspond to a plurality of bearings [10]), and LCF002467 (titled "03 – Base Frame with Bearings – Guide Pulleys – Rollers.pdf" showing a plurality of bearings coupled to the frame).	

a running belt at least partially supported by the rotatable element, wherein the running belt includes a running surface, at least a portion of which is curved;	A "running belt at least partially supported by the rotatable element" where "the running belt includes a running surface, at least a portion which is curved" is literally present in the Infringing Product. As shown, a running belt [11] includes a curved running surface [12] running belt [11] which is at least partially supported by the rotatable element (*i.e.*, by at least one of the front running belt pulley [6], the rear running belt pulley [7], and/or the plurality of bearings [10], as an example). While the second picture only shows the running belt [11] supported by the front running belt pulley [6] and the plurality of bearings [10], a corresponding configuration is provided with the rear running belt pulley [7] and the running belt [11]. Therefore and as shown, the rotatable element (*i.e.*, the front running belt pulley [6], the rear running belt pulley [7], and/or the plurality of bearings [10], as an example) is coupled to the frame [1]. *See also, e.g.*, LCF000013 (describing the treadmill as	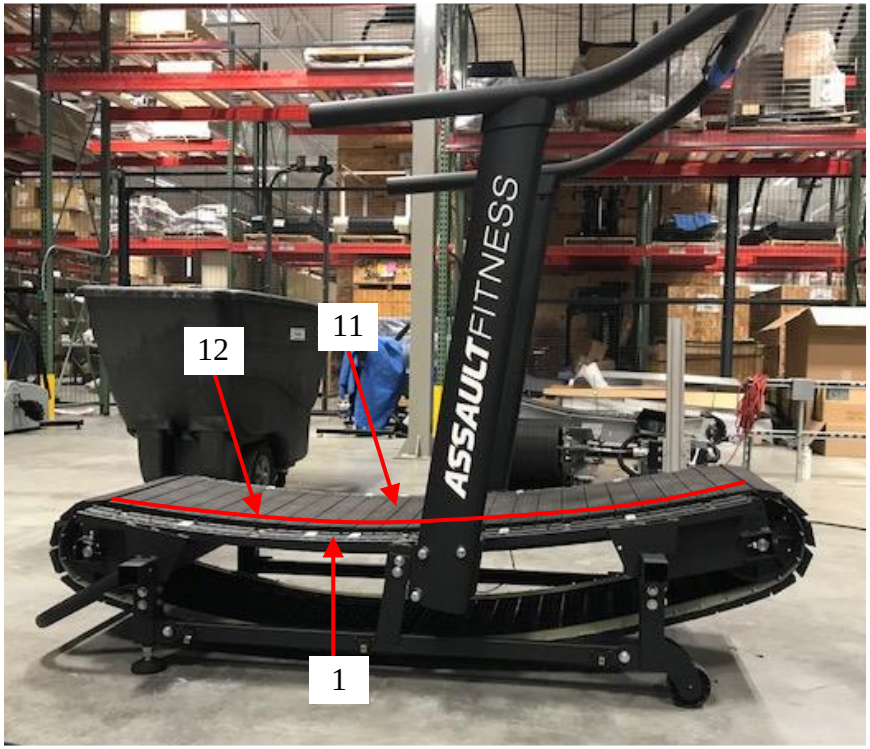 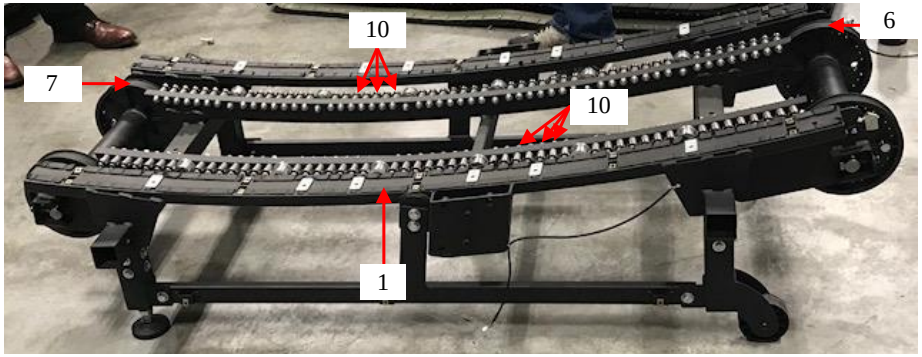

	including "…a slat belt running surface…"), LCF000795 (under "Proposed Product Features" "Slatted belt construction: allows for curved running surface" and under "Frame" "Shall be designed to support a curved running surface,"), LCF000895 (under "Low Impact" "The contoured design…"), LCF02133 (with "Belt Design" described as "Contoured").	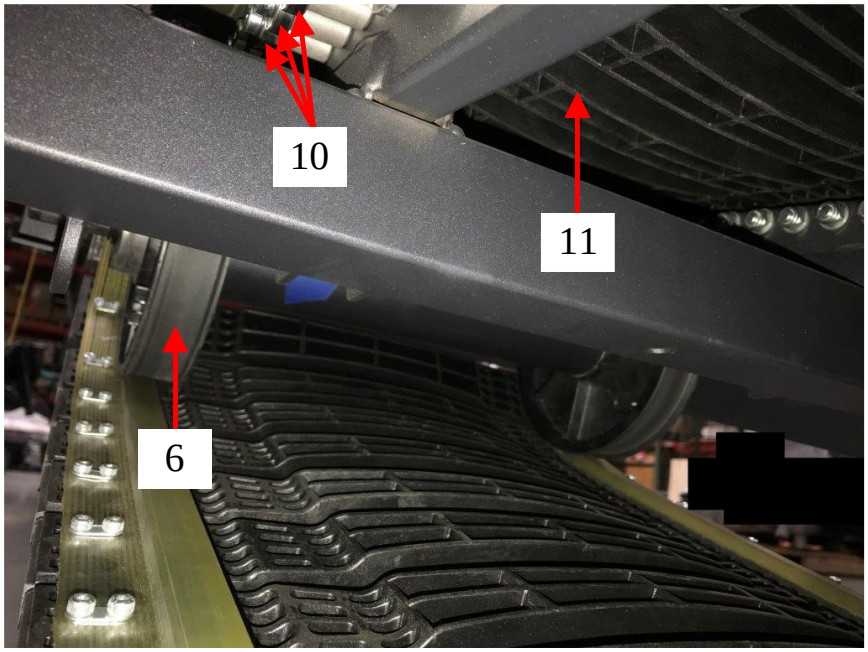

a support element coupled to the frame; and	A "support element coupled to the frame" is literally present in the Infringing Product. As shown, the support element [16] is coupled to the frame [1]. *See also, e.g.,* LCF002467 (describing that the shafts *i.e.,* support element [16] "are fixedly coupled to the frame with bolts").	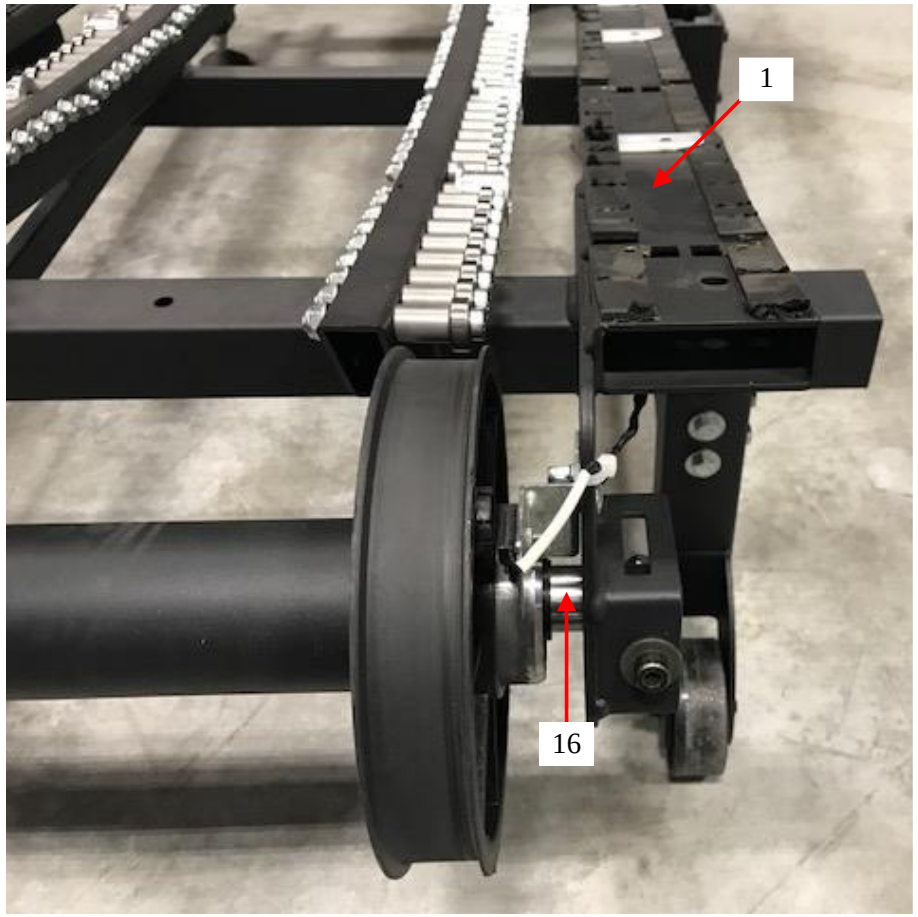

a safety device coupled to the running belt, the safety device at least partially supported by the support element,	A "safety device coupled to the running belt" and "at least partially supported by the support element" is literally present in the Infringing Product. The Court construed the term "safety device" as "a device that includes the elements recited and restricts rotation to allow for only one rotational direction of movement." *See* Dkt. 59 at 23. As shown, a safety device [13] is coupled to the running belt [11], and is at least partially supported by a support element [16]. As defined in the specification, and construed by the Court, "the term 'coupled' means the joining of two members directly or indirectly to one another. Such joining may be stationary or moveable in nature … . Such joining may be achieved with the two members or the two members and any additional intermediate members." *See* '745 Patent at col. 32, ll. 22-27; Dkt. 59 at 8, n.1. Thus, the safety device [13] is coupled to the running belt [11] directly or indirectly through an intermediate member (*e.g.*, via the front running belt pulley [6]).	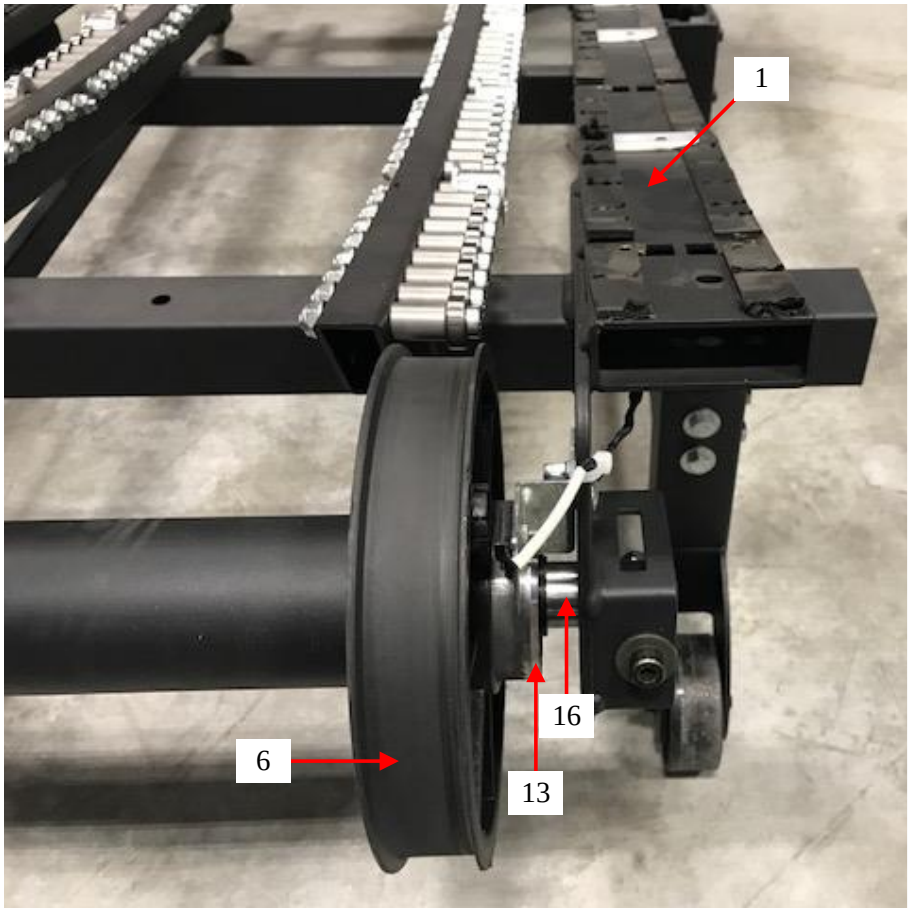

	See also, e.g., LCF002474 (illustrating the "One-Way Clutch Bearing (*i.e.*, Safety Device)" is coupled onto the "Front Shaft" [support element 16]").	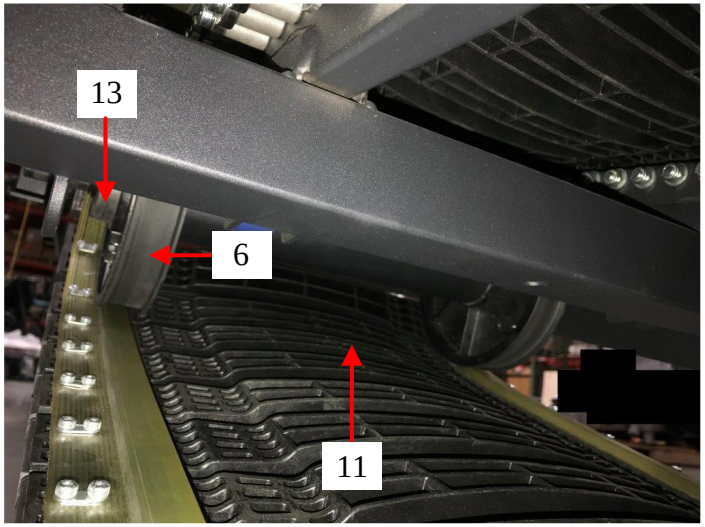 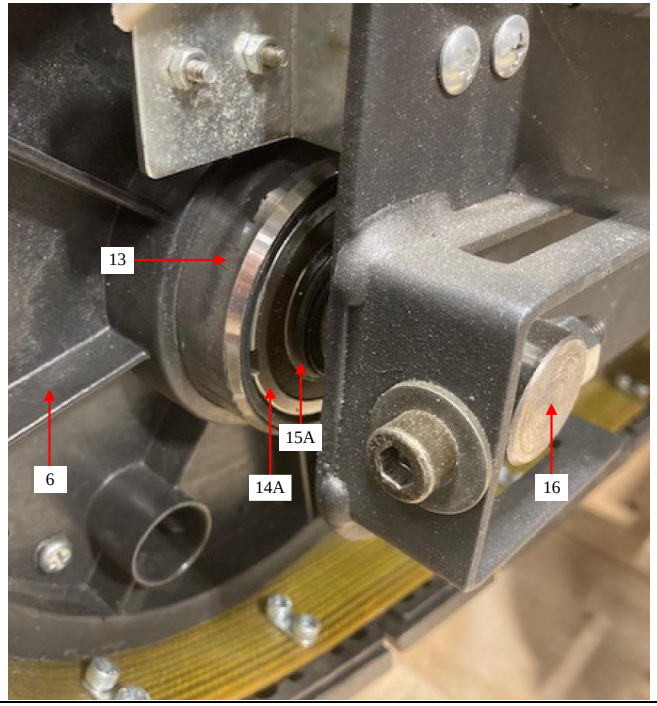

wherein the safety device includes a first safety race element and a second safety race element, wherein at least one of the first and second safety race elements is adapted for rotation relative to the frame, and wherein one of the first and second safety race elements substantially surrounds the other of the one of the first and second safety race elements;	The safety device having "a first safety race element and a second safety race element," where "at least one of the first and second safety race elements is adapted for rotation relative to the frame" and "one of the first and second safety race elements substantially surrounds the other of the one of the first and second safety race elements" is literally present in the Infringing Product. The safety device [13] includes a one-way bearing assembly. *See* LCF001767 (at row 75 "BEARING, ONE-WAY") and LCF002474 (describing the included One-Way Clutch Bearing as "*i.e.*, the safety device"). Specifically, the safety device [13] includes an Altra Industrial Motion brand Combined Bearing/Freewheel type CSK 25 PP "sprag type freewheel[]." *See, e.g.*, Altra Industrial Motion, *Overrunning Clutches and Backstops* at p. 16 (2017). The CSK 25 PP has "both [an] inner and outer race," *id.* at p. 4. Therefore, the safety device [13] includes a first safety race element [14A] (*i.e.*, the "outer race") and a second safety race element [15A] (*i.e.*, the "inner	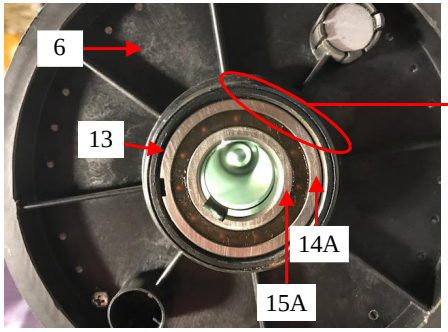 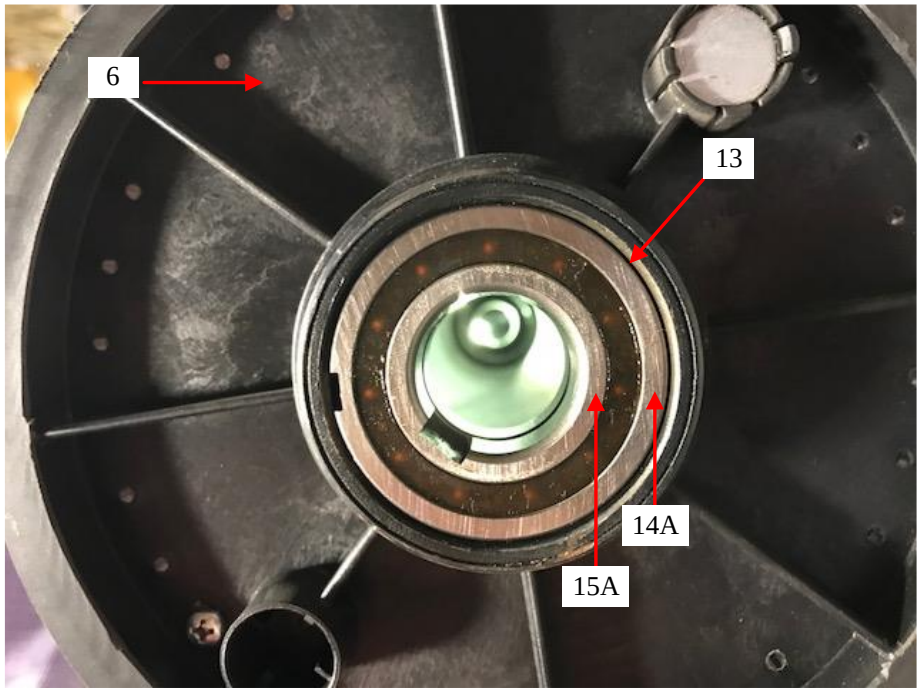

	race"). The first safety race element [14A] substantially surrounds the second safety race element [15A]. "[A]t least one of the first and second safety race elements [that] is adapted for rotation relative to the frame" can mean that (i) only the first safety race element is adapted for rotation relative to the frame; (ii) only the second safety race element is adapted for rotation relative to the frame; or (iii) both of the first and second safety race elements are adapted for rotation relative to the frame. In this configuration, the first safety race element [14A] is "adapted for rotation relative to the frame. *See also, e.g.,* LCF002474 (illustrating the one-way clutch bearing with an outer ring *i.e.,* race substantially surrounding an inner ring *i.e.,* race).	

wherein one of the first and second safety race elements and the running belt freely rotates in a first direction of rotation relative to the frame, however, in a second direction of rotation, opposite the first direction of rotation, the one of the first and safety race elements is substantially prevented from rotation relative to the frame to substantially prevent rotation of the running belt.	"[O]ne of the first and second safety race elements and the running belt freely rotates in a first direction of rotation relative to the frame" and "in a second direction of rotation, opposite the first direction of rotation, the one of the first and second safety race elements is substantially prevented from rotation relative to the frame to substantially prevent rotation of the running belt relative to the frame to substantially prevent rotation of the running belt" is literally present in the Infringing Product. The Court construed the term "substantially prevent[]" as "restricts rotation to allow for only one rotational direction of movement." *See* Dkt. 59 at 23. The safety device [13] includes a one-way bearing assembly. *See* LCF001767 (at row 75 "BEARING, ONE-WAY") and LCF002474 (describing the included One-Way Clutch Bearing as "*i.e.*, the safety device"). Specifically, the safety device [13] includes an Altra Industrial Motion brand Combined Bearing/Freewheel type CSK 25 PP "sprag type freewheel[]." *See, e.g.*, Altra Industrial Motion, *Overrunning*	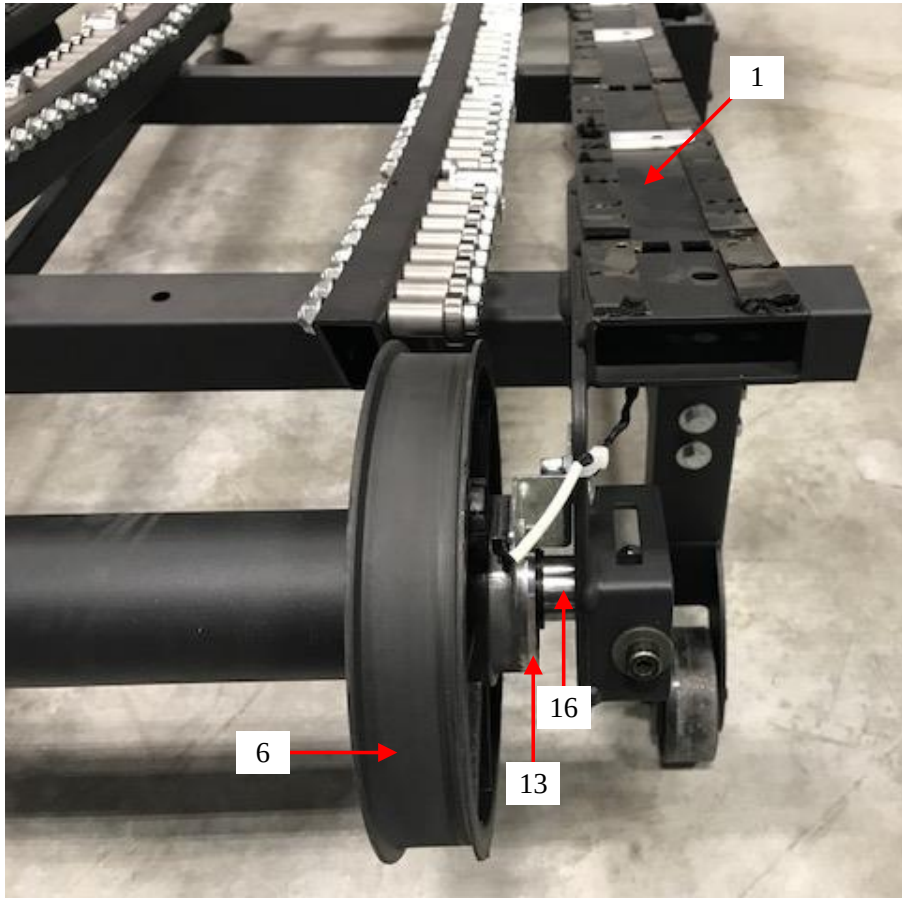

	Clutches and Backstops at p. 16 (2017). The CSK 25 PP has "both [an] inner and outer race" and "locking elements [] positioned between [the] outer and [the] inner race which effect engaging and disengaging." *Id.* at p. 4. As such, the CSK 25 PP "allows rotation in one direction only … . The freewheel prevents reverse rotation if the drive is disconnected [*i.e.*, disengaged] ... ." *Id.* at p. 3. Because the first safety race element [14A] of the safety device [13] is coupled to the running belt [11] via the front running belt pulley [6] and the safety device [13] "allows rotation in one direction only," *id.*, the first safety race element [14A] and the running belt [11] are freely rotatable in a first direction around the first safety race element [14A] relative to the frame [1]. However, in a second direction of rotation opposite the first direction of rotation, "engagement … [occurs] according to the relative motion of the" first and second safety race elements [10] and [11], *id.* at p. 5, to substantially "prevent[] [a] reverse rotation,"	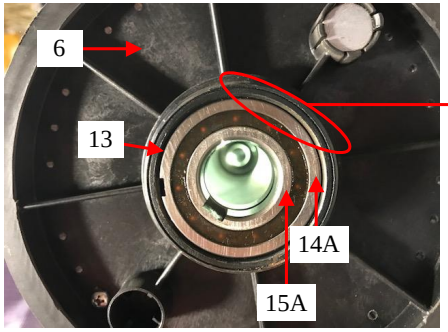 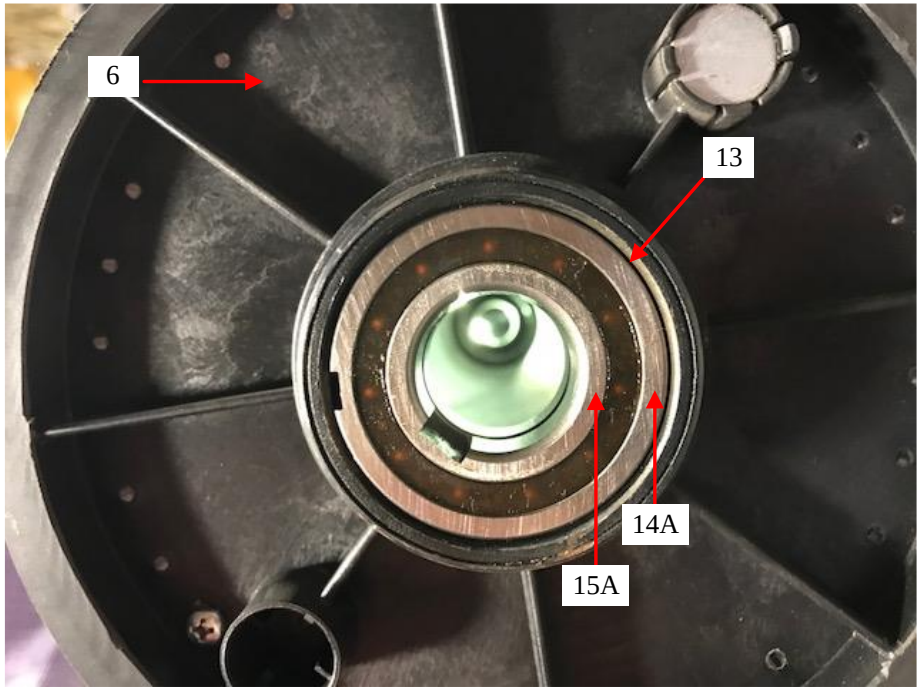

	id. at p. 3, of the first safety race element [14A] and the running belt [11] relative to the frame [1]. The safety device [13] thus "restricts rotation to allow for only one rotational direction of movement." *See* LCF002474 (describing how the "One-Way Clutch Bearing (*i.e.*, the Safety Device)" in combination with the "Front Shaft" [support element 16] allows the "Front Roller Subassembly" to rotate around the "Front Shaft" [*i.e.*, the shaft internal to shaft 4] in only one direction.").	

22. The treadmill of claim 21, wherein the rotatable element comprises at least one of a front running belt pulley coupled to the frame and a rear running belt pulley coupled to the frame and spaced apart from the front running belt pulley.	A "rotatable element" which includes at least one of "a front running belt pulley coupled to the frame and a rear running belt pulley coupled to the frame and spaced apart from the front running belt pulley" is literally present in the Infringing Product. As shown, the rotatable element may include a front running belt pulley [6] coupled to the frame [1] and a rear running belt pulley [7] coupled to the frame [1]. As also shown, the rear running belt pulley [7] is spaced a distance [31] apart from the front running belt pulley [6]. As defined in the specification, and construed by the Court, "the term 'coupled' means the joining of two members directly or indirectly to one another. Such joining may be stationary or moveable in nature … . Such joining may be achieved with the two members or the two members and any additional intermediate members." *See* '745 Patent at col. 32, ll. 22-27; Dkt. 59 at 8, n.1. Thus, the front running belt pulley [6] and the rear running belt pulley [7] may be coupled to the frame [1] directly or	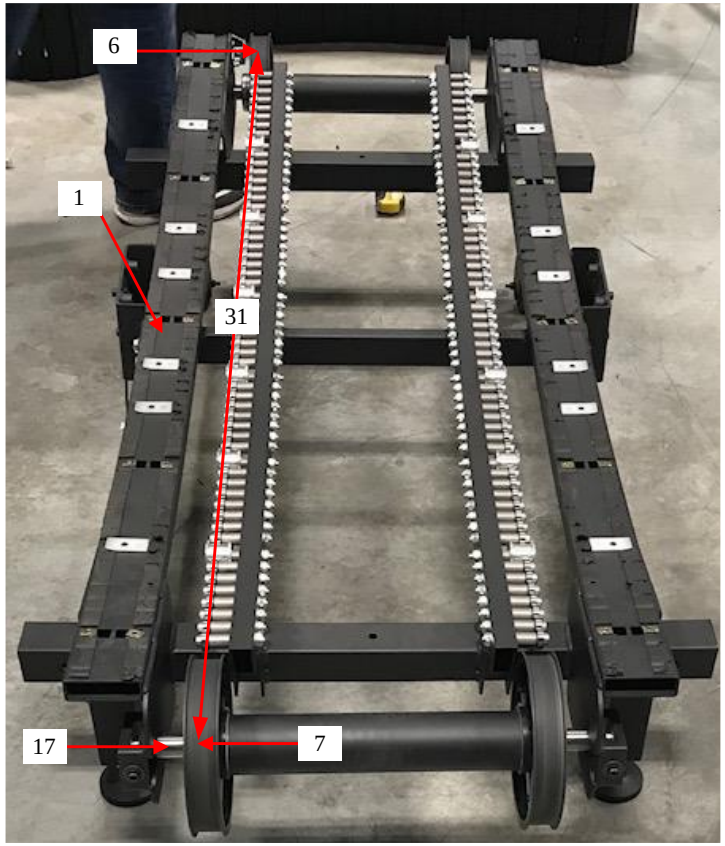 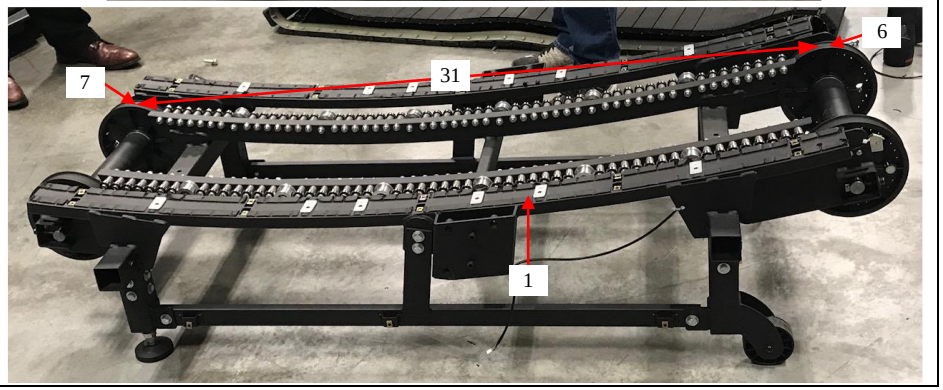

	indirectly through an intermediate member. Therefore and as shown, the front running belt pulley [6] is coupled to the frame [1] and the rear running belt pulley [7] is coupled to the frame [1] and spaced apart from the front running belt pulley [6]. *See also, e.g.,* LCF000166 (illustrating part no. 511* "Front Roller," part no. 511-A "Front Roller Assembly," part no. 512* "Rear Roller," and part no. 512-A "Rear Roller Assembly," each of which include a pulley), LCF002470 (illustrating the "Rear Roller Subassembly" including a pulley), and LCF002475 (illustrating the "Front Roller Subassembly" including a pulley).	

23. The treadmill of claim 21, wherein the rotatable element comprises at least one of a front rotatable shaft coupled to the frame and a rear rotatable shaft coupled to the frame and spaced apart from the front rotatable shaft.	A "rotatable element" which includes "at least one of a front rotatable shaft coupled to the frame and a rear rotatable shaft coupled to the frame and spaced apart from the front rotatable shaft" is literally present in the Infringing Product. The Court construed the term shaft according to its plain and ordinary meaning. As shown, the rotatable element can be at least one of a front rotatable shaft [4A] coupled to the frame [1] and a rear rotatable shaft [5A] coupled to the frame [1]. As also shown, the rear rotatable shaft [5A] is spaced a distance [32] apart from the front rotatable shaft [4A]. As defined in the specification, and construed by the Court, "the term 'coupled' means the joining of two members directly or indirectly to one another. Such joining may be stationary or moveable in nature … . Such joining may be achieved with the two members or the two members and any additional intermediate members." *See* '745 Patent at col. 32, ll. 22-27; Dkt. 59 at 8, n.1.	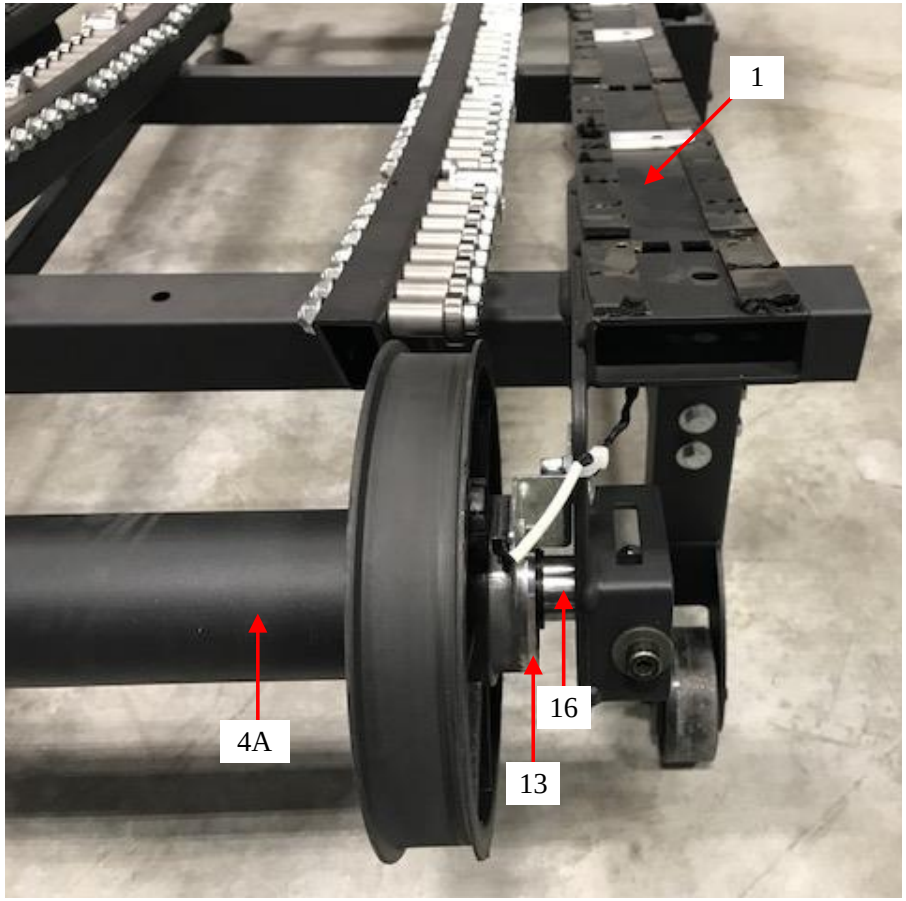

	Thus, the front rotatable shaft [4A] and the rear running rotatable shaft [5A] may be coupled to the frame [1] directly or indirectly through an intermediate member. *See also, e.g.,* LCF000166 (illustrating part no. 511* "Front Roller," part no. 511-A "Front Roller Assembly," part no. 512* "Rear Roller," and part no. 512-A "Rear Roller Assembly," each of which include a shaft), LCF002470 (illustrating the "Rear Roller Subassembly" including a shaft), and LCF002475 (illustrating the "Front Roller Subassembly" including a shaft).	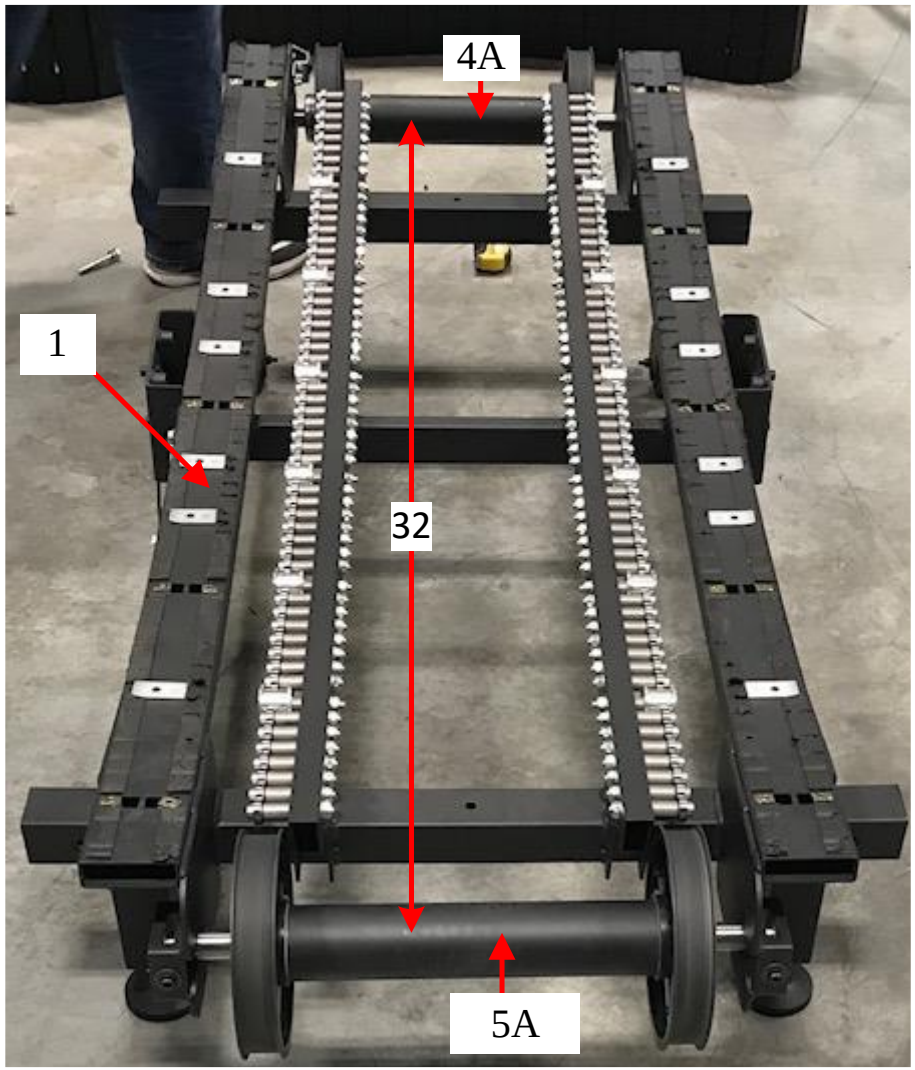

Appendix C – Claim Chart for U.S. Patent No. 10,799,745 ("the '745 Patent")

		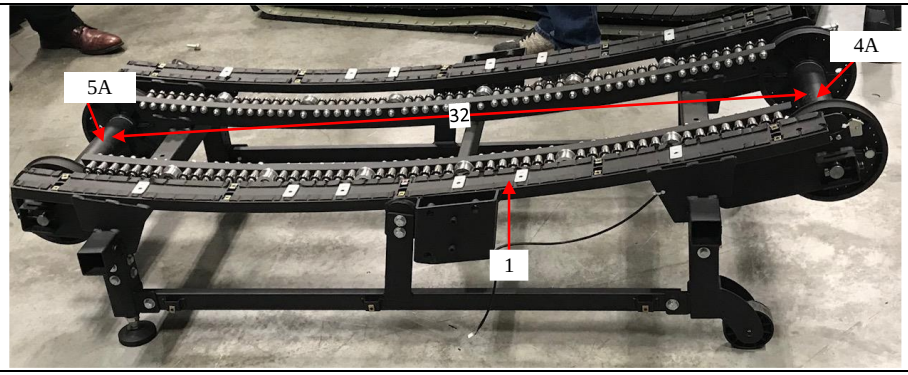

24. The treadmill of claim 21, wherein the rotatable element comprises a running belt pulley coupled to the frame.	A "rotatable element" which includes "a running belt pulley coupled to the frame" is literally present in the Infringing Product. As shown, the rotatable element can be a front running belt pulley [6] and/or a rear running belt pulley [7] coupled to the frame [1]. As defined in the specification, and construed by the Court, "the term 'coupled' means the joining of two members directly or indirectly to one another. Such joining may be stationary or moveable in nature … . Such joining may be achieved with the two members or the two members and any additional intermediate members." *See* '745 Patent at col. 32, ll. 22-27; Dkt. 59 at 8, n.1. Thus, the front running belt pulley [6] and/or the rear running belt pulley [7] may be coupled to the frame [1] directly or indirectly through an intermediate member. Therefore and as shown, the front running belt pulley [6] and the rear running belt pulley [7] are coupled to the frame [1].	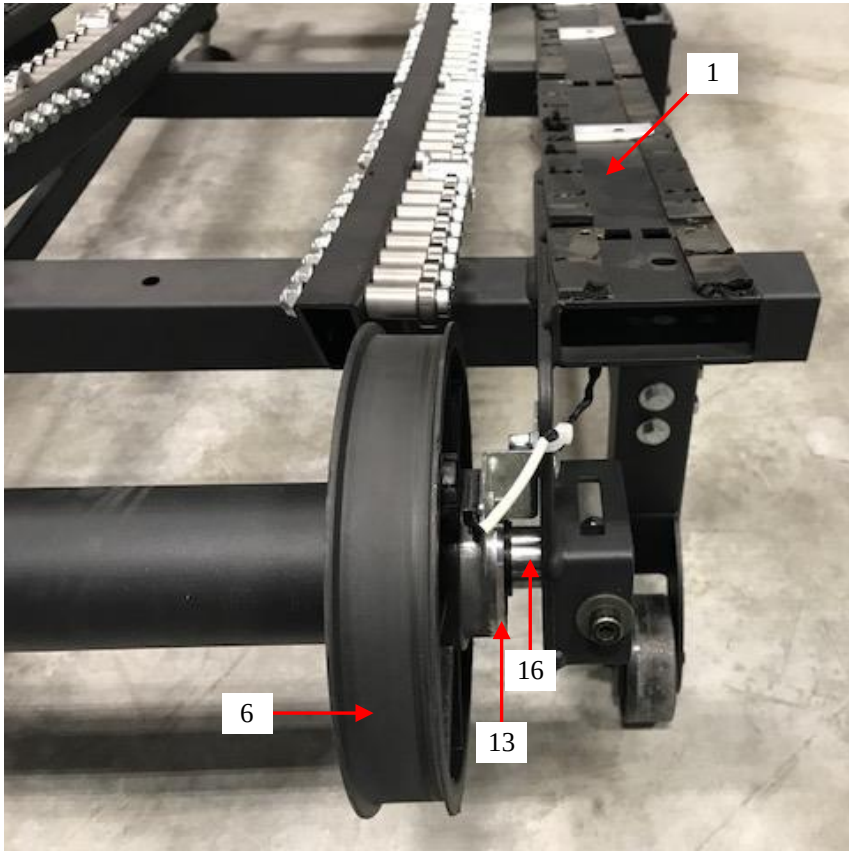 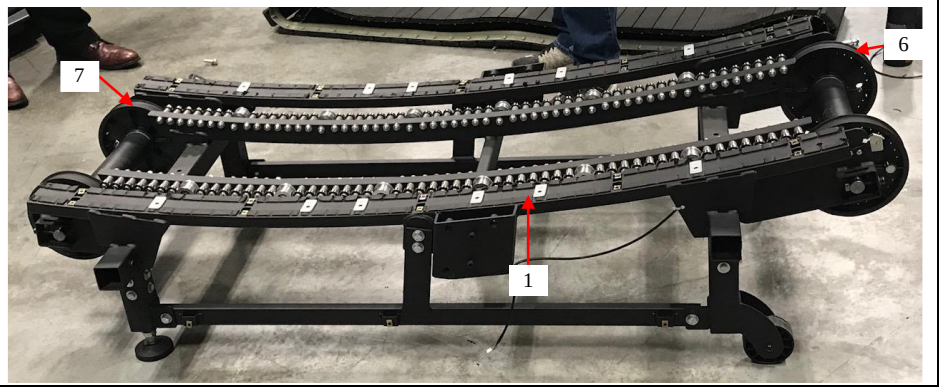

	See also, e.g., LCF000166 (illustrating part no. 511* "Front Roller," part no. 511-A "Front Roller Assembly," part no. 512* "Rear Roller," and part no. 512-A "Rear Roller Assembly," each of which include a pulley), LCF002470 (illustrating the "Rear Roller Subassembly" including a pulley), and LCF002475 (illustrating the "Front Roller Subassembly" including a pulley).	
25. The treadmill of claim 21, wherein the first and second safety race elements of the safety device at least partly form a one-way bearing.	The "first and second safety race elements of the safety device" at least partly forming a "one-way bearing" is literally present in the Infringing Product. The safety device [13] includes a one-way bearing assembly. *See* LCF001767 (at row 75 "BEARING, ONE-WAY") and LCF002474 (describing the included One-Way Clutch Bearing as "*i.e.,* the safety device"). Specifically, the safety device [13] includes an Altra Industrial Motion brand type CSK 25 PP bearing. The CSK 25 PP has "both [an] inner and outer race," *see, e.g.,* Altra Industrial Motion, *Overrunning Clutches and Backstops* at p. 4 (2017), and is a "self-contained ball	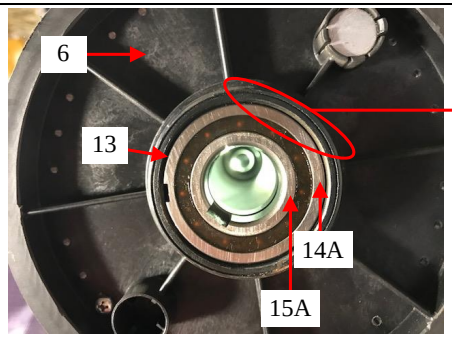

	bearing unit[]," *id.* at p. 9 (emphasis added). Specifically, the safety device [13] is a CSK 25 PP "sprag type freewheel[] integrated into a 62 … series ball *bearing*[] ... ." *Id.* at p. 16 (emphasis added). The CSK 25 PP "allows rotation in one direction only ... . The freewheel prevents reverse rotation ... ." *Id.* at p. 3. As shown, the safety device [13] at least partly formed by the first safety race element [14A] and the second safety race element [15A] is a "self-contained ball *bearing* unit[]," *id.* at p. 9 (emphasis added), which "allows rotation in one direction only ... ." The freewheel prevents reverse rotation ... ." *Id.* at p. 3. Thus, the safety device is a bearing that allows rotation in only one direction (*i.e.*, a one-way bearing).	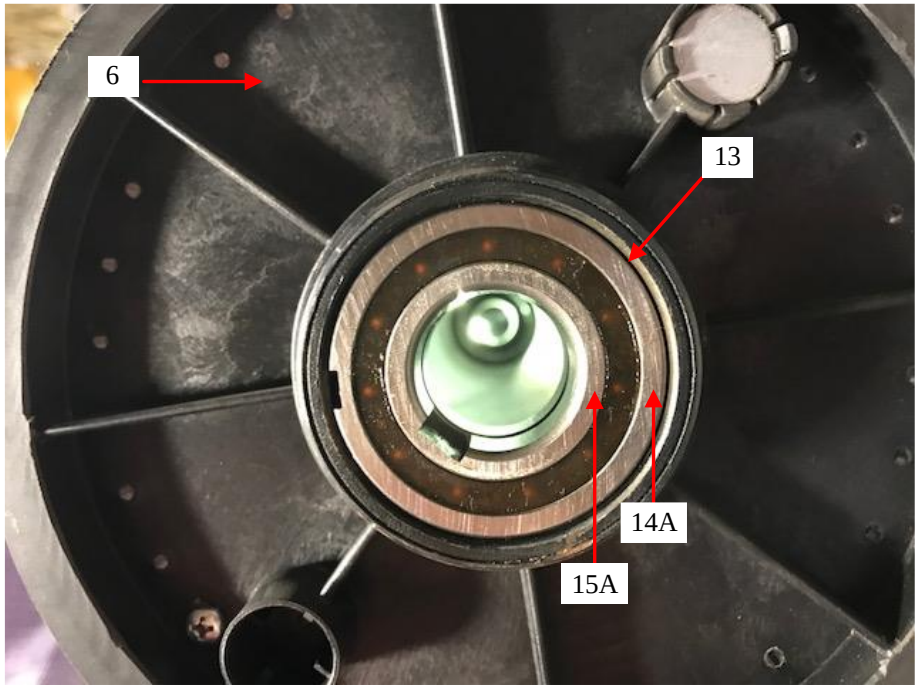

26. The treadmill of claim 21, wherein the support element comprises a rod.	A "support element" which includes "a rod" is literally present in the Infringing Product. As shown, the support element [16] is a rod. *See also, e.g.*, LCF002474 (describing the "Front Roller Subassembly" includes a shaft *i.e.*, support element [16]).	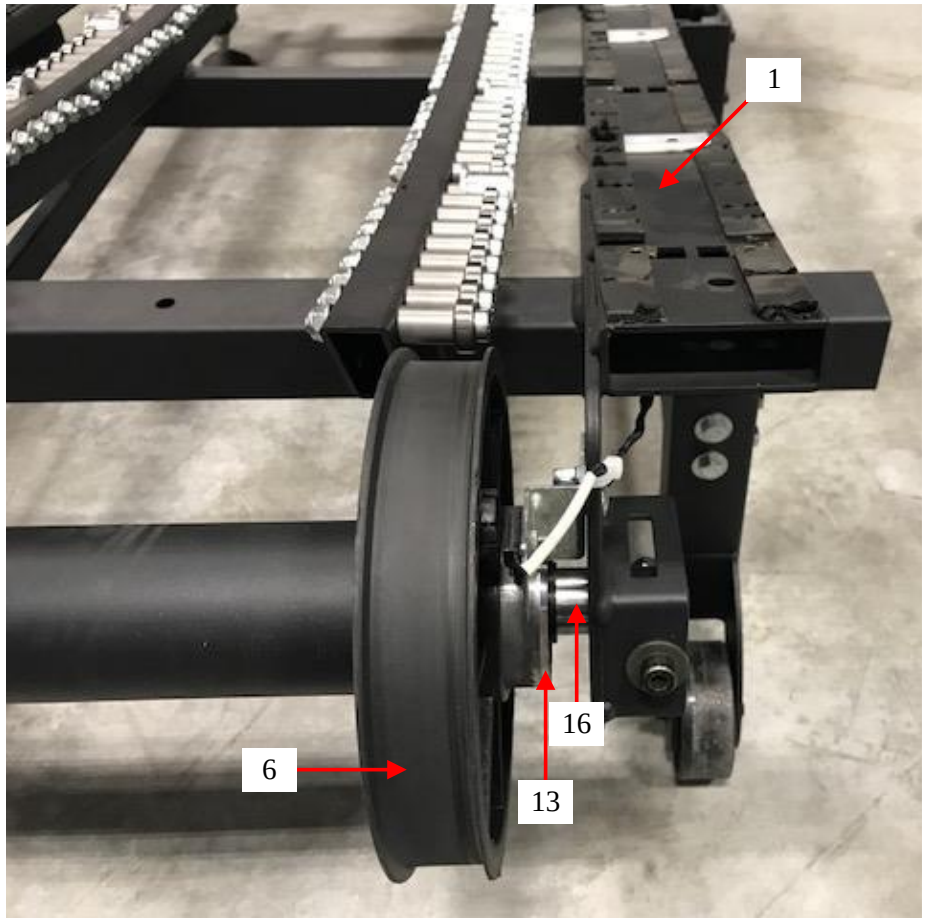

		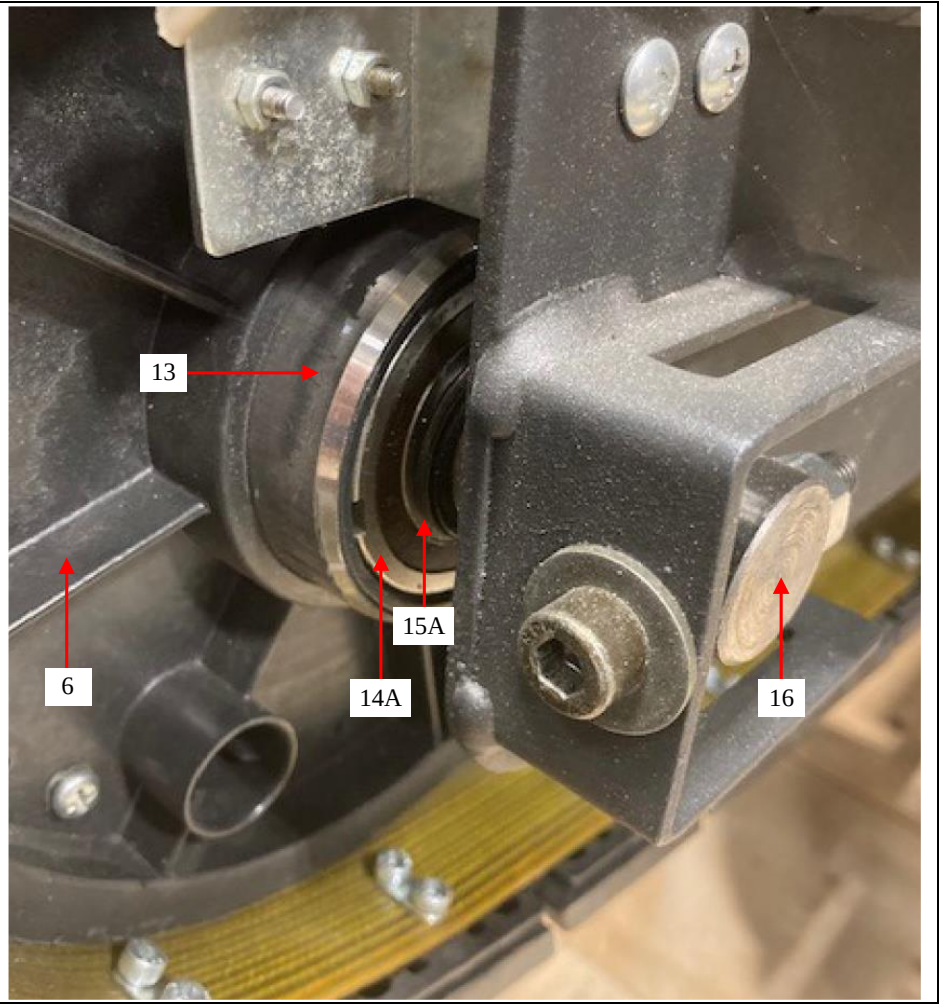 13 15A 6 14A 16