US006206991B1

(12) **United States Patent**
Starr

(10) **Patent No.: US 6,206,991 B1**
(45) **Date of Patent: Mar. 27, 2001**

(54) **ROOF TILE CONSTRUCTION USING SANDWICHED ADHESIVE**

(75) Inventor: **Cris Damon Starr**, Cape Coral, FL (US)

(73) Assignee: **Fomo Products, Inc.**, Norton, OH (US)

(*) Notice: Subject to any disclaimer, the term of this patent is extended or adjusted under 35 U.S.C. 154(b) by 0 days.

(21) Appl. No.: **09/317,325**

(22) Filed: **May 24, 1999**

(51) **Int. Cl.**[7] **E04D 1/00**; E04D 1/34

(52) **U.S. Cl.** **156/71**; 156/71; 156/291; 52/535; 52/543

(58) **Field of Search** 156/71, 77, 78, 156/79, 291; 52/540, 543, 518, 535

(56) **References Cited**

U.S. PATENT DOCUMENTS

2,424,410		7/1947	Miles .
2,667,131		1/1954	Clarvoe et al. .
3,042,193		7/1962	Wendt .
3,050,908		8/1962	Schenk .
3,080,683		3/1963	Sallie .
3,180,783		4/1965	Walker et al. .
3,252,257		5/1966	Price et al. .
3,511,007		5/1970	Babcock .
5,362,342		11/1994	Murray et al. .
5,428,931	*	7/1995	Ragsdale .
5,895,536		4/1999	Starr et al. .

FOREIGN PATENT DOCUMENTS

2 169 329 7/1986 (GB) .

OTHER PUBLICATIONS

Information Disclosure Statement filed in U.S. patent No. 5,362,342 with Declaration of Pat L. Murray dated, May 11, 1994.

Declaration of Anthony DeVito filed in U.S. patent No. 5,895,536, dated Jun. 9, 1998.

OSI Brochure showig RT 600 Roof Tile Adhesive—Not dated.

Acceptance Notice No. 96–0320.01 dated Oct. 18, 1996 from Building Code Compliance Dept., Metropolitan Dade County, comprising 10 pages for RT–600 Roof Tile Adhesive.

Copies of general purpose one–component, polyurethane foam aerosol can labels published in Europe believed dating to 1990 (and earlier) comprising 8 sheets marked E–1 through E–8.

Copies of Instruction sheets published in Europe (about 1992) showing gun dispensal of general purpose one–component polyurethane foam comprising 5 sheets marked F1 through F–5.

* cited by examiner

Primary Examiner—Sam Chuan Yao
(74) *Attorney, Agent, or Firm*—Frank J. Nawalanic

(57) **ABSTRACT**

A roof construction uses a one-component adhesive to adhere roof tiles to a roof. The adhesive is formed in a U-shaped pattern in that the adhesive is dispensed in a bottom leg deposit on the tile's underside, a bight deposit extending about the tile's leading edge and a top adhesive deposit overlying the bottom deposit and extending on the outside surface of the tile. As the tiles are laid onto the roof in an overlying fashion, the U-shaped adhesive is sandwiched between the tile, the overlying tile and the roof forming sealing contact therewith and therebetween.

40 Claims, 10 Drawing Sheets

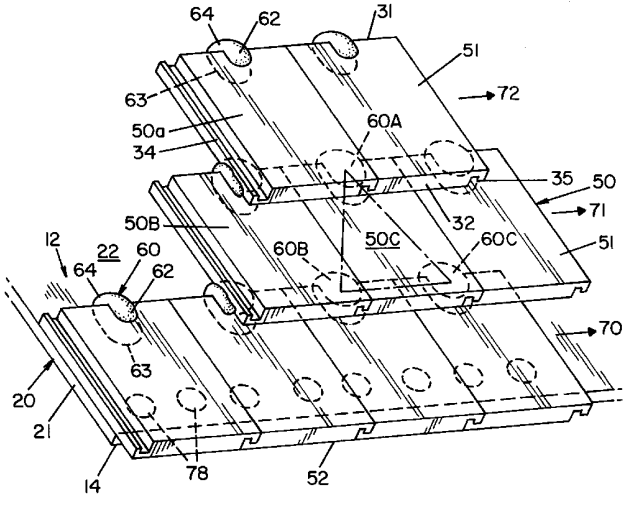

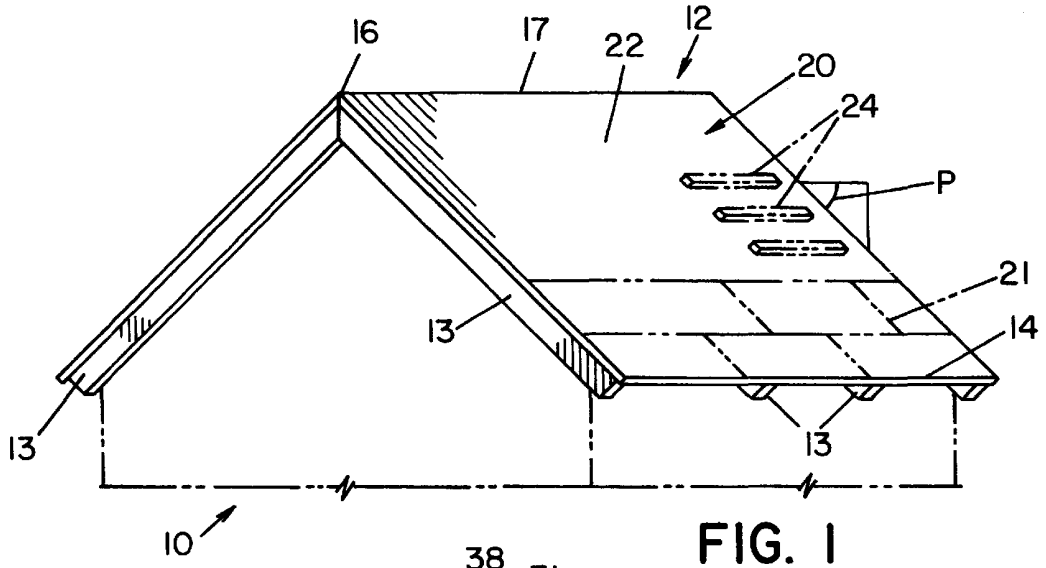

FIG. 1

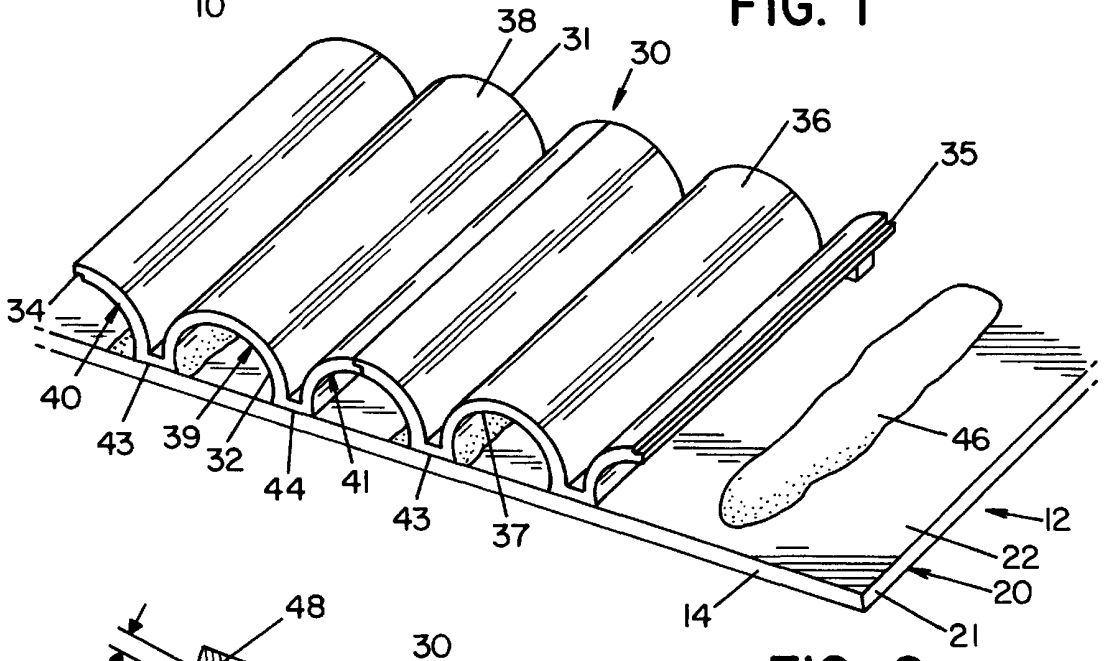

FIG. 2
(PRIOR ART)

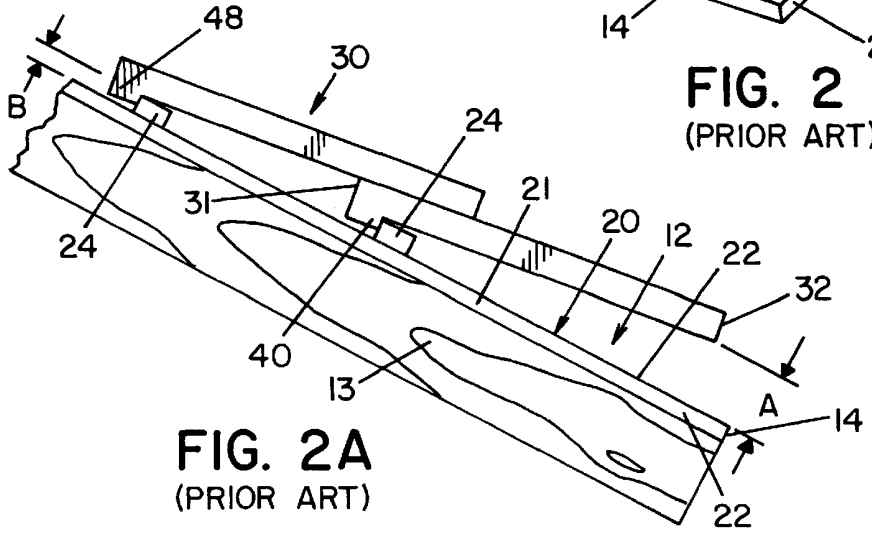

FIG. 2A
(PRIOR ART)

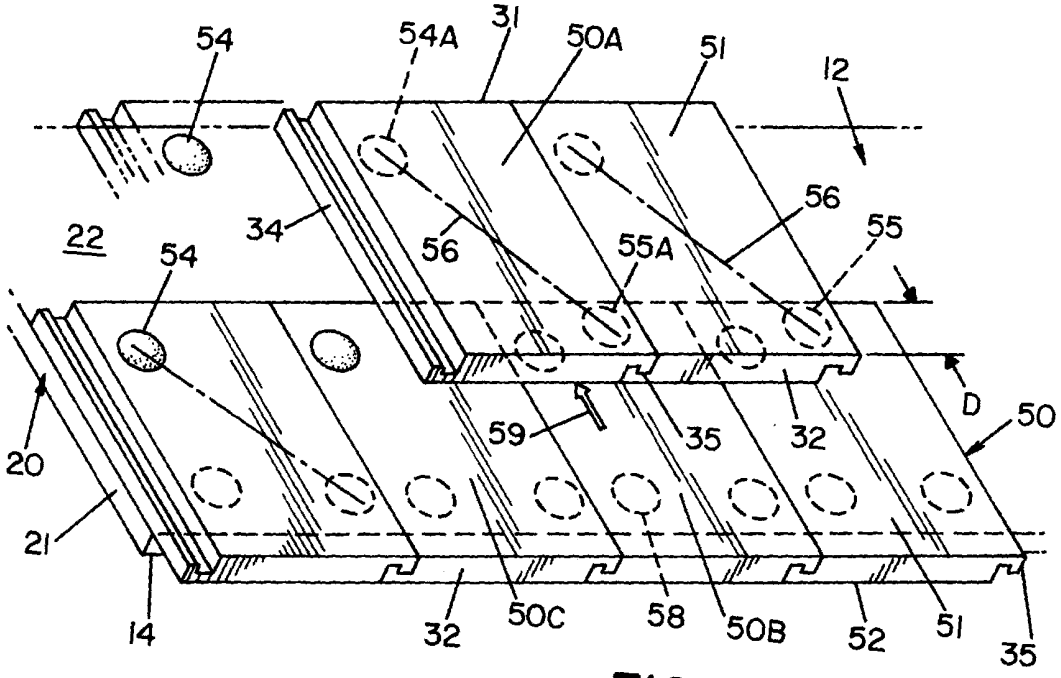

FIG. 3
(PRIOR ART)

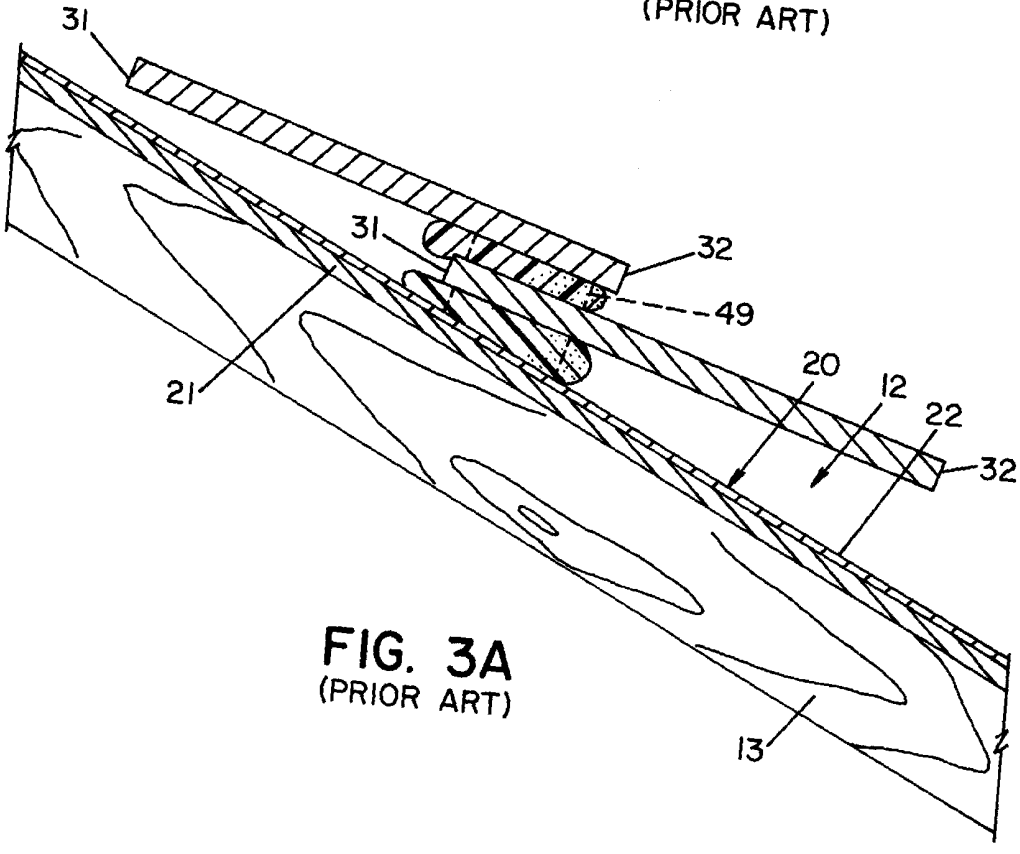

FIG. 3A
(PRIOR ART)

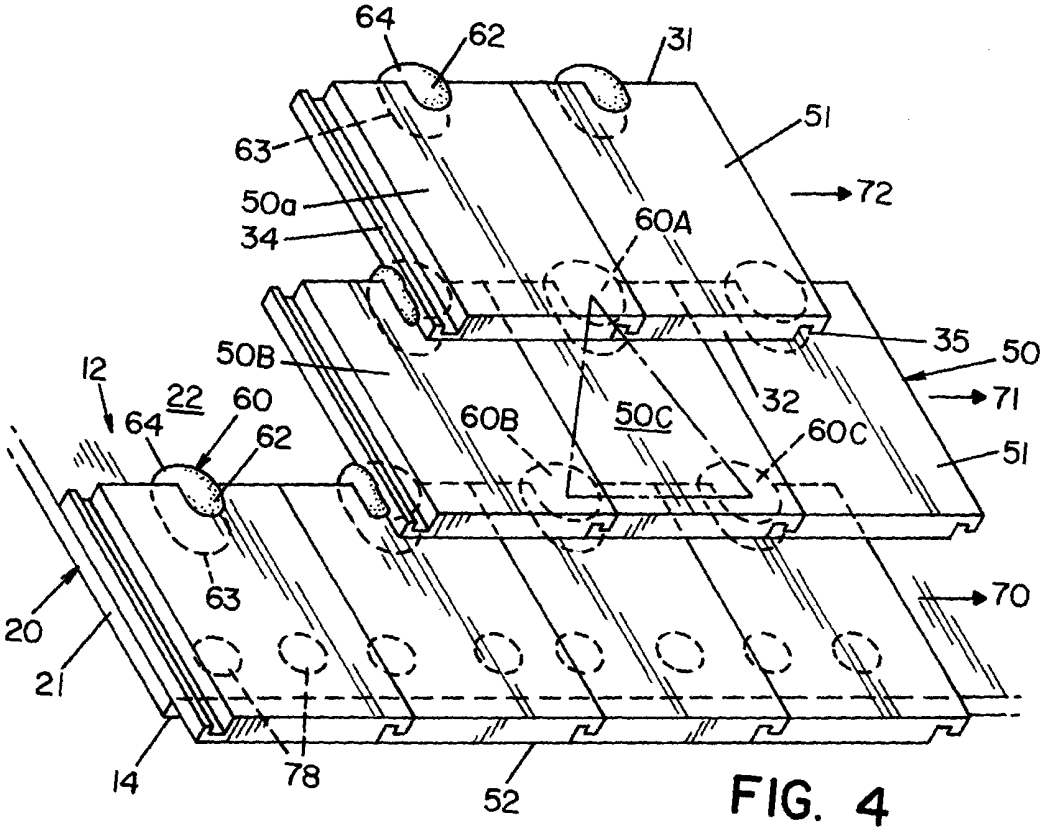
64
62
31
51
63
50a
34
72
60A
35
50
12
22
60
64
62
50B
60B
50C
32
71
60C
51
63
70
20
21
14
78
52

FIG. 4

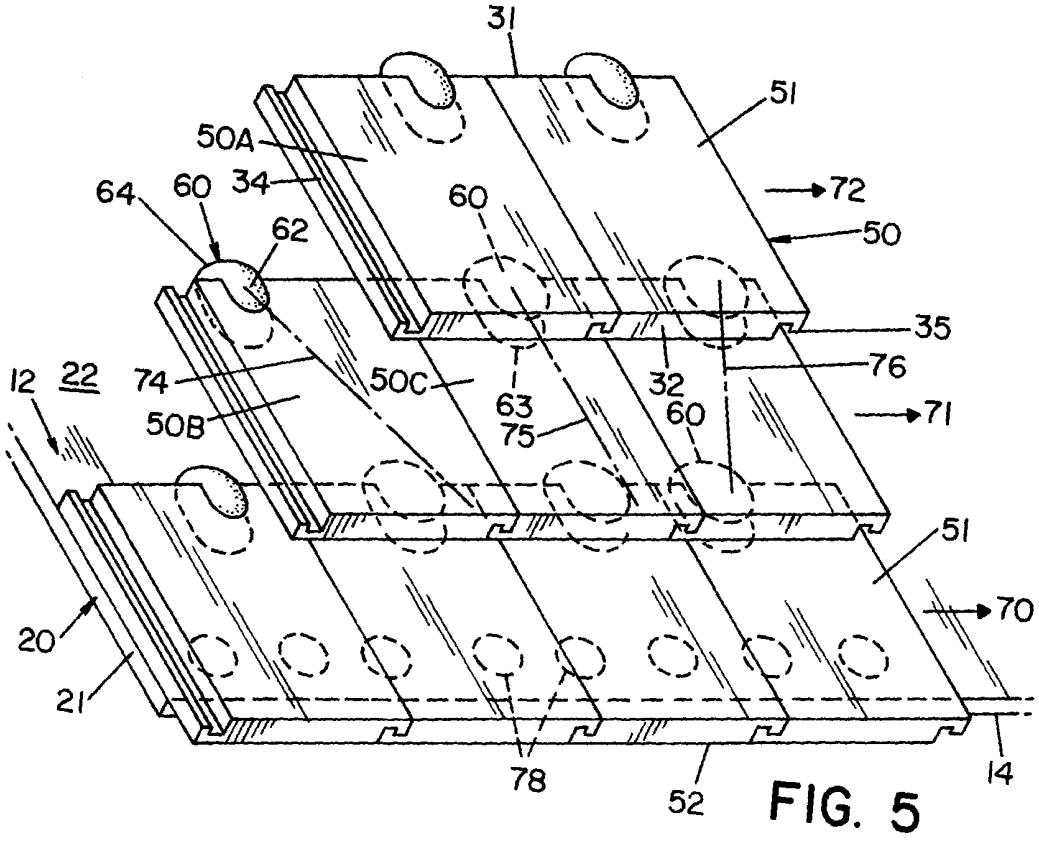
31
51
50A
34
64
60
62
60
72
50
35
12
22
74
50C
63
75
32
60
76
71
50B
51
70
20
21
78
52
14

FIG. 5

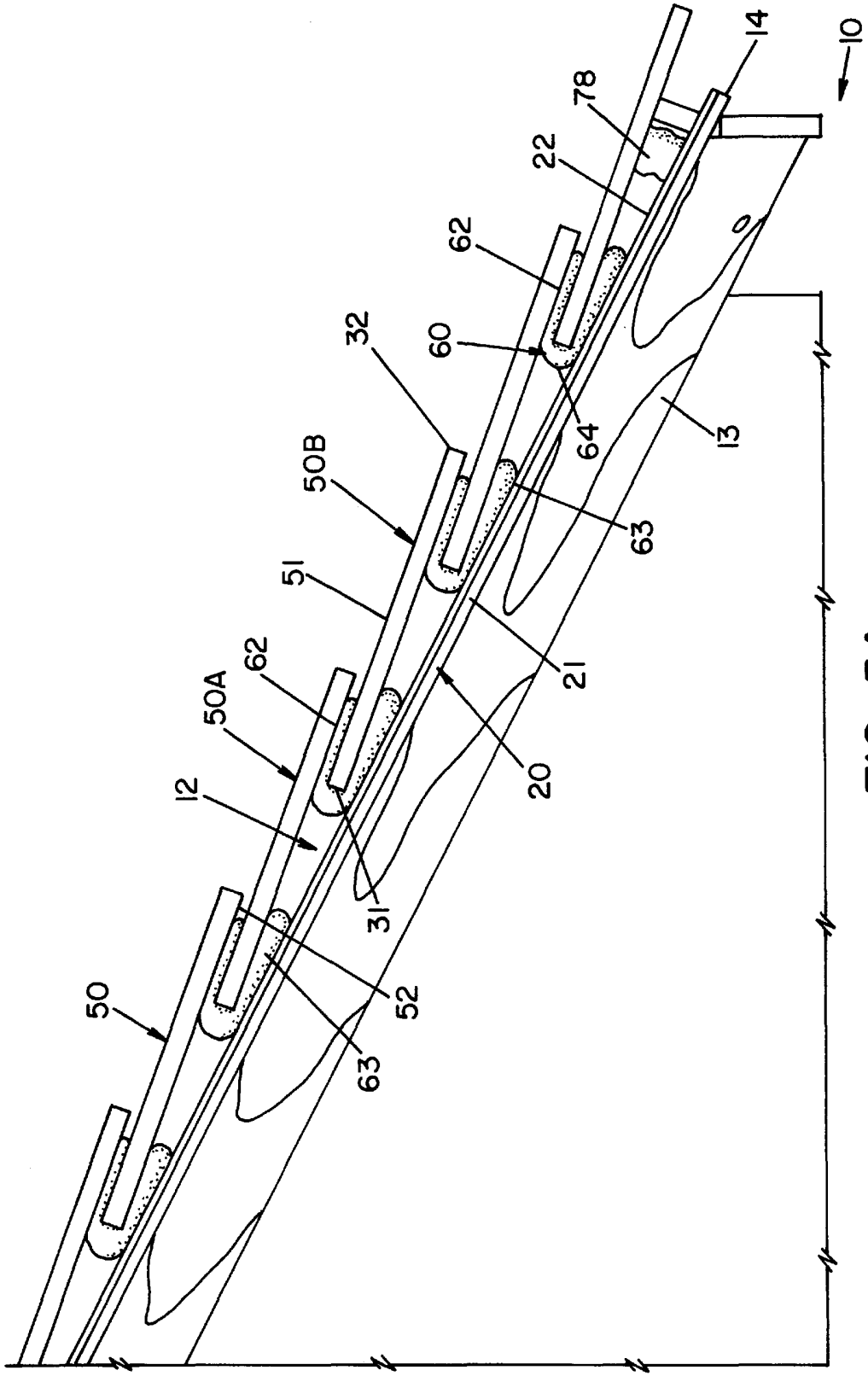

FIG. 5A

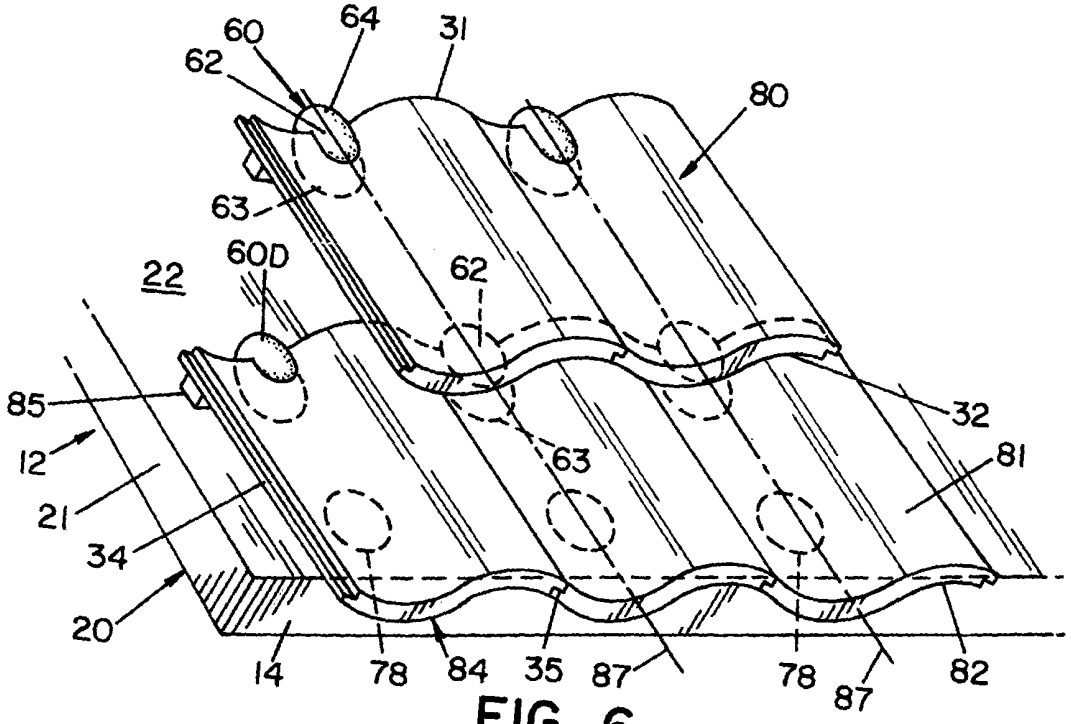
60
64
31
62
80
63
22
60D
62
85
32
12
63
81
21
34
20
14
78
84
35
87
78
87
82

FIG. 6

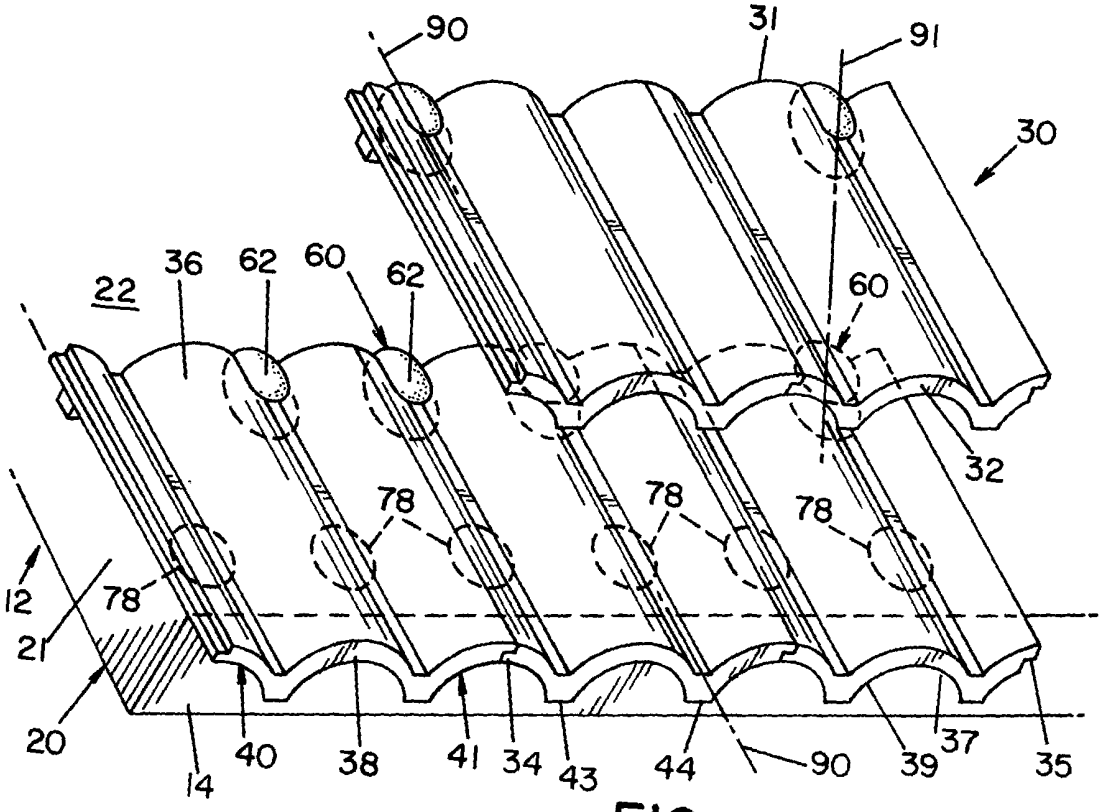
90
31
91
30
22
36
62
60
62
60
32
78
78
78
12
78
21
20
14
40
38
41
34
43
44
90
39
37
35

FIG. 7

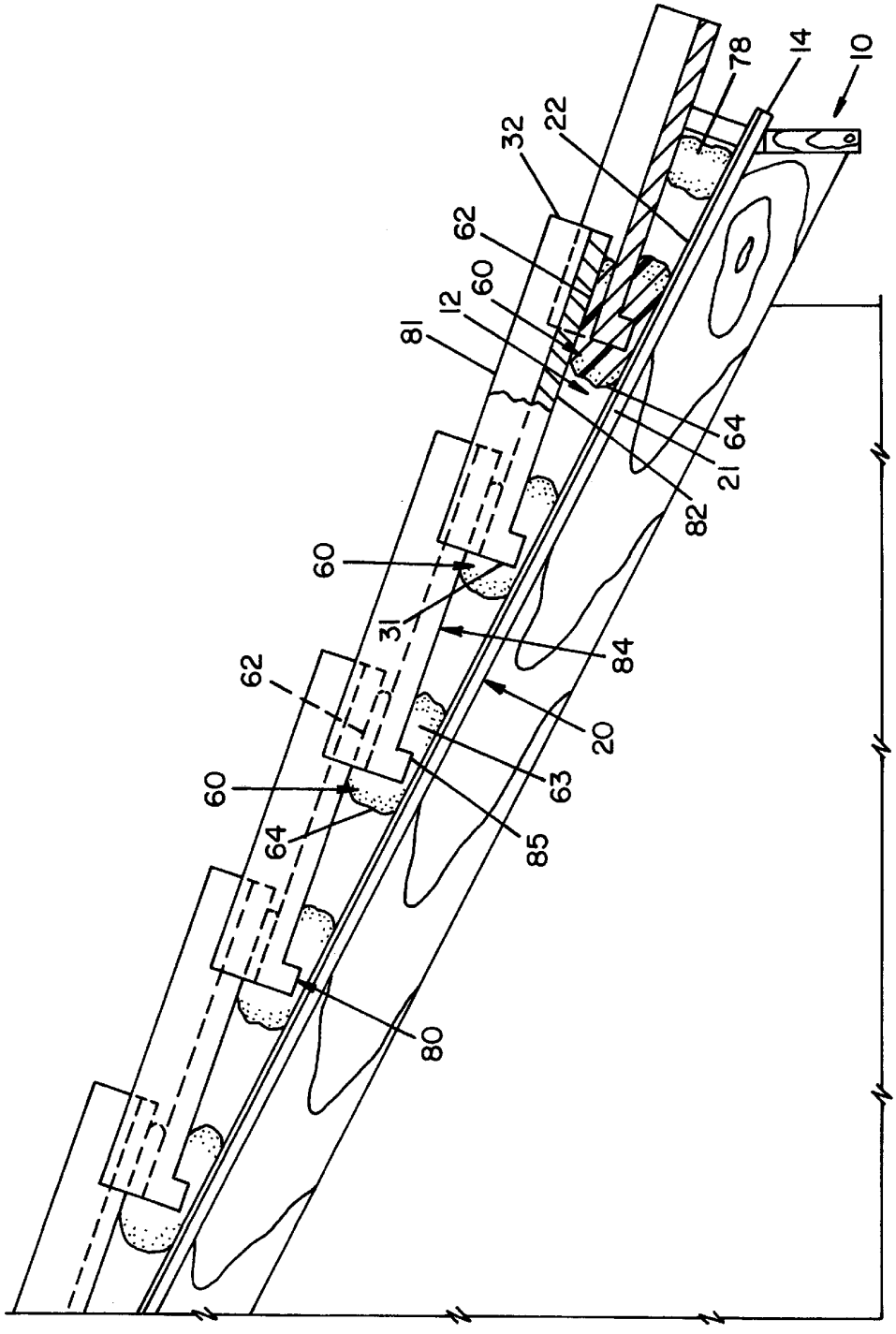

FIG. 6A

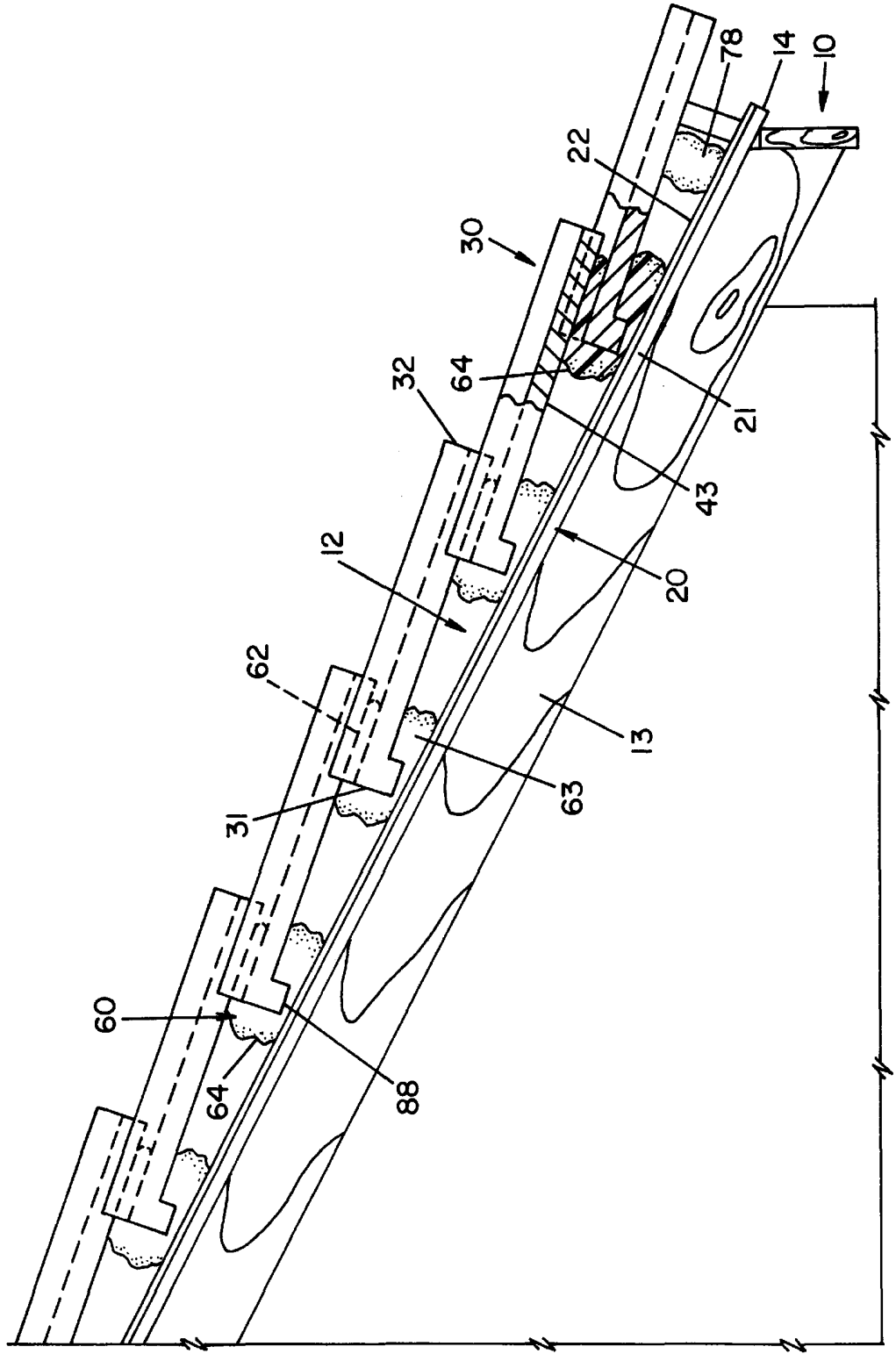

FIG. 7A

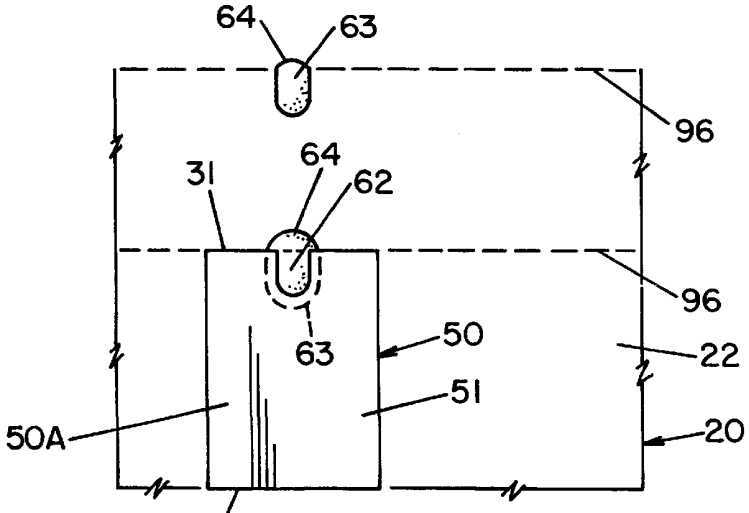

FIG. 8

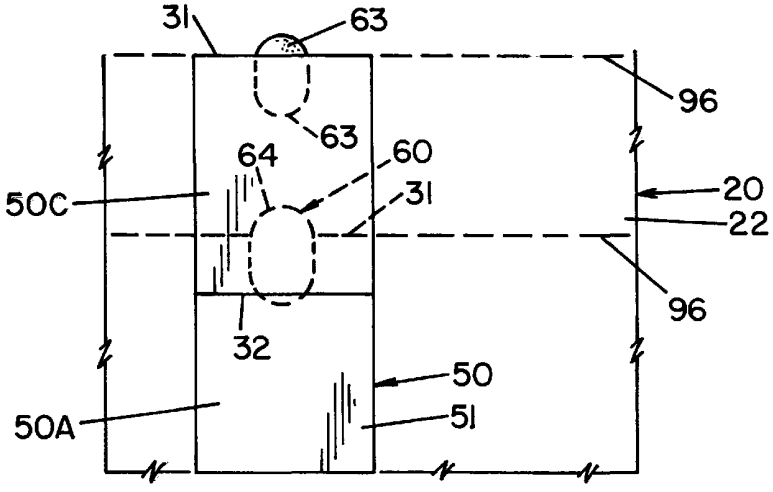

FIG. 8A

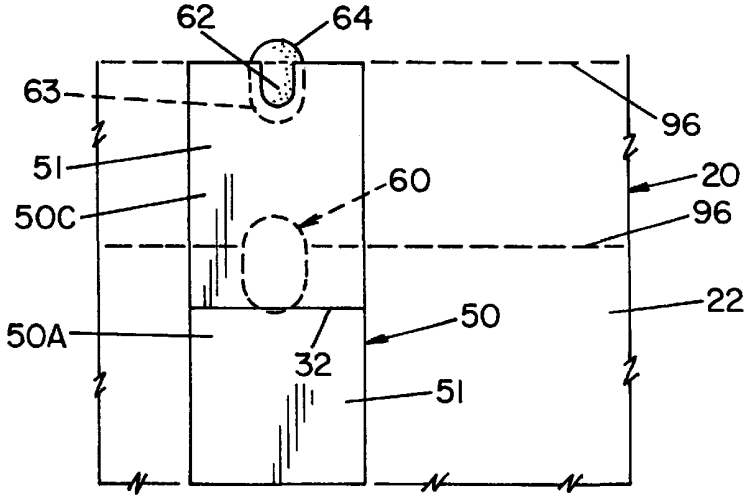

FIG. 8B

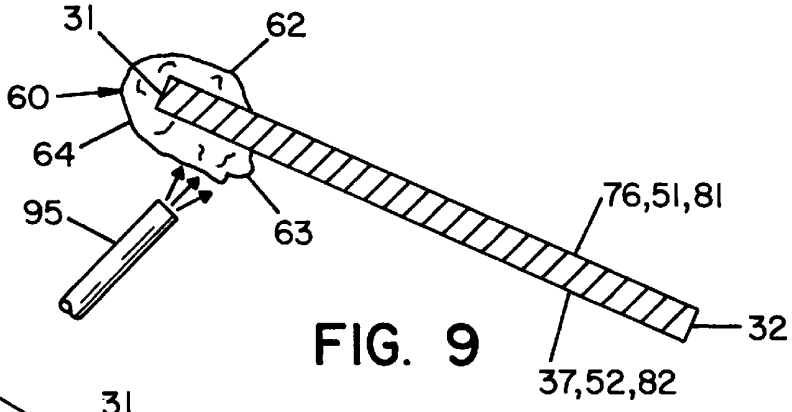

FIG. 9

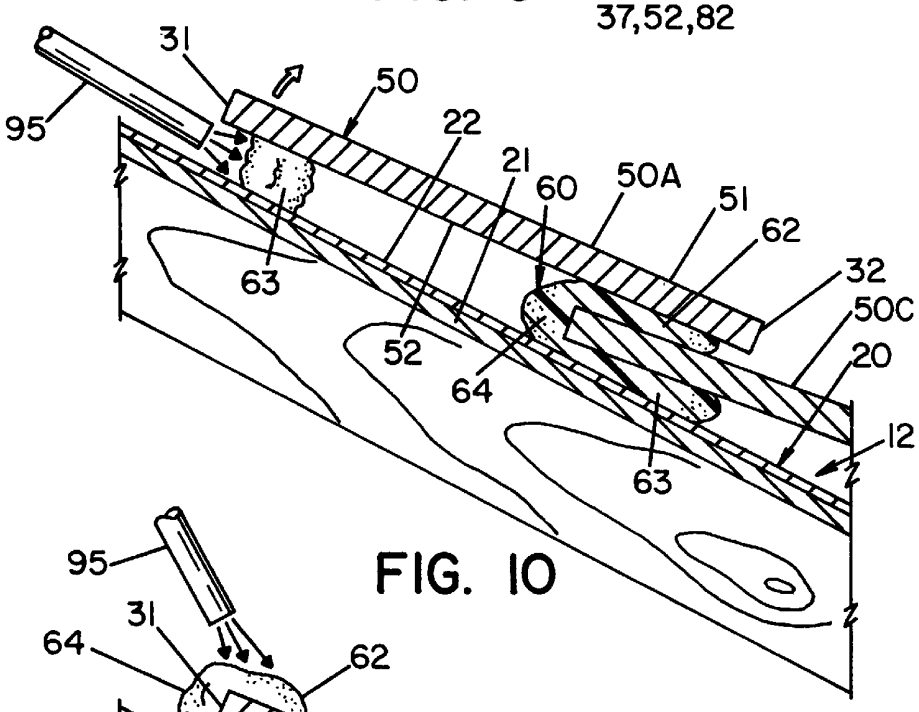

FIG. 10

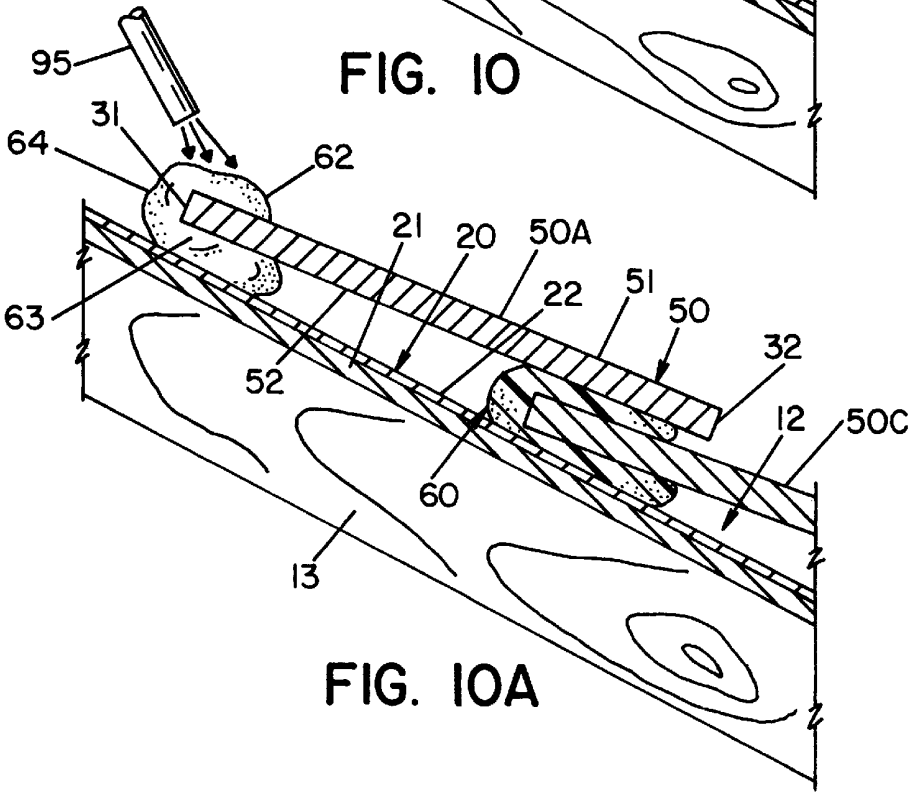

FIG. 10A

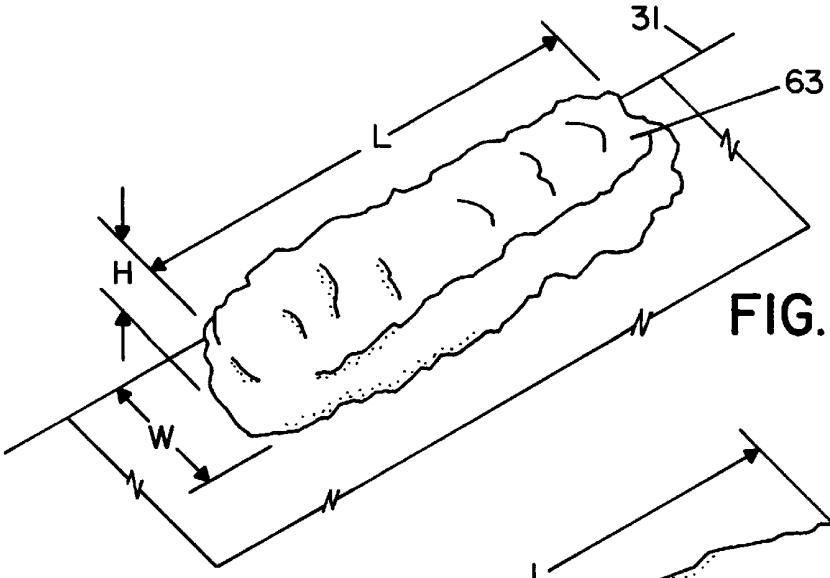

FIG. 11

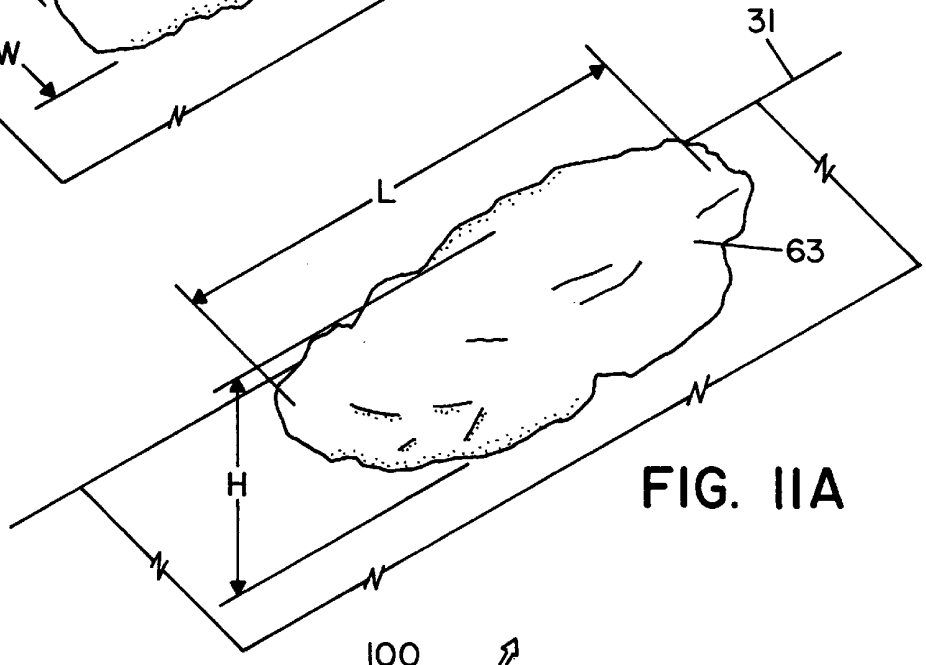

FIG. 11A

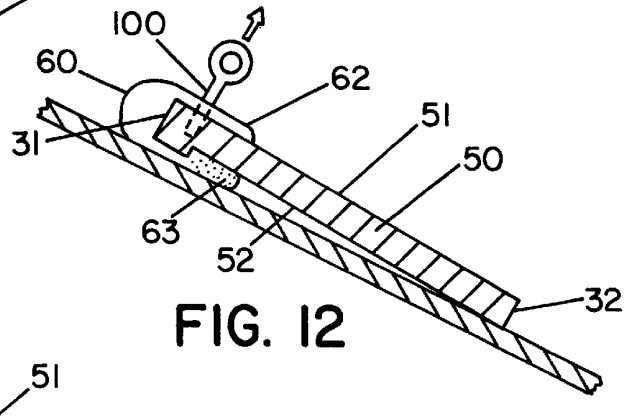

FIG. 12

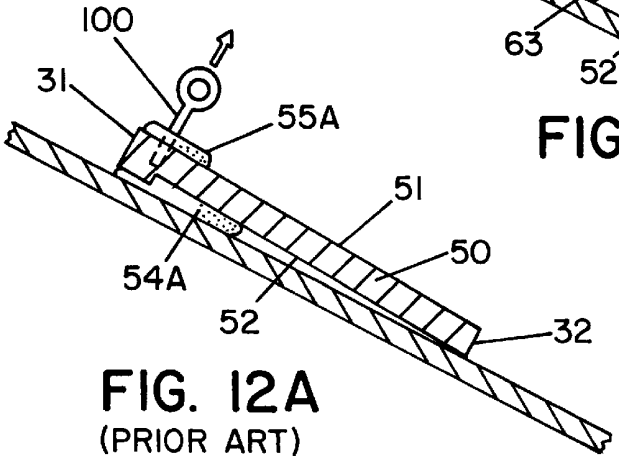

FIG. 12A
(PRIOR ART)

ROOF TILE CONSTRUCTION USING SANDWICHED ADHESIVE

This invention relates to roof construction and more particularly to a system, method and apparatus, for securing roof tiles to a roof.

The invention is particularly applicable to and will be described with specific reference to a roof construction using a one-component, polyurethane adhesive froth to attach any conventional roof tile to a roof. However, those skilled in the art will recognize that the invention has broader application and conceivably, could be used with two-component, polyurethane foam adhesives.

INCORPORATION BY REFERENCE

The following patents are incorporated herein by reference and made a part hereof:

My U.S. Pat. No. 5,895,536, issued Apr. 20, 1999, entitled "METHOD OF ADHERING ROOF TILES USING ONE-COMPONENT ADHESIVE AND ROOF CONSTRUCTION OBTAINED THEREBY" and U.S. Pat. No. 5,362,342, to Murray et al., issued Nov. 8, 1994, entitled "METHOD OF BONDING ROOF TILES TO ROOF SUBSTRATE UTILIZING URETHANE FOAM".

Neither patent incorporated by reference herein forms any part of this invention. The material is incorporated by reference so that the detailed description of this invention need not set forth in detail prior art construction techniques and methods known in the art as explained in the patents listed above.

BACKGROUND

Roof construction, particularly residential roof construction, varies by climatic location throughout the United States. This invention relates to protective roof coverings formed by roof tiles as opposed to asphalt based roof shingles typically used in the northern parts of the United States to form a protective roof covering. Roof tiles are typically constructed from natural materials such as clay, concrete, stone, ceramics (including brick and fired clay) and have also been made of synthetic material, typically plastic and it is possible to have tiles formed from combinations of natural and synthetic materials, i.e., fibrous cement.

Traditionally, in the United States, roof tiles have been applied with a cementitious material, typically mortar usually mixed at the site. The prior art patents incorporated by reference discuss at length inherent problems encountered when mortar is used to affix roof tiles to the roof substrate and those problems will not be restated herein. However, the prior art patents have not discussed mortar patterns used to affix the roof tiles to the roof. While it may have been conventional at one time to simply place the mortar on the underside of the roof tile, without regard to mortar amount, building construction regulations such as those promulgated by Southern Building Code, Florida, require that no more than 33% of the area underneath the tile be covered by the adhering material. This leaves the space between tiles and between roof and tiles open for air circulation so that the tiles are less likely to be pulled off the roofs during hurricane winds. Accordingly, conventional practice today is to trowel a glob or pad of mortar over the central underside area of the tile (or alternatively, a deposit of the mortar is placed on the roof), which is then flattened somewhat when the tile is positioned onto the roof substrate. Again, the height and area of the mortar pad is such that no more than 33% of the area of the tile is to be covered by the cementitious material. In practice, it sometimes occurs that too little or too much mortar is used which, coupled with the well known adhesive inconsistencies of mortar, results in faulty tile application.

Because of the limitations of conventional cementitious materials, specifically mortar, other types of materials, principally adhesives, have been investigated for use as bonding agents to affix roof tiles to the roof substrate without the need for mechanical fasteners.

A) U.S. Chronology.

Accordingly, at least as early as the summer of 1992, I purchased an off-the-shelf, commercially available, one-component, polyurethane foam in a pressurized aerosol spray type container. The polyurethane foam was applied as a deposit in the shape of a centrally positioned pad, replicating the conventional mortar pad shape and position, and used to affix the roof tiles to the roof. It was found that the polyurethane foam would act as an adhesive fixing the tile to the roof substrate. However, the expansion of the foam lifted the tile as the foam cured and it was believed that the strength of the adhesive bond had to be thoroughly investigated as well as formulations addressing the tile lifting before a commercial product could be offered. Through my employer at that time, Life Tile (a subsidiary of Boral Concrete Products), a number of polyurethane foam companies were contacted to determine if there was an interest in pursuing a joint test program utilizing polyurethane foam as a roof tile adhesive. One company, Poly-Foam Products, Inc. expressed an interest in the roof tile application and I worked with that company commencing in the spring of 1993 on a program which resulted in the development of a two-component, polyurethane roof tile adhesive as disclosed in U.S. Pat. No. 5,362,342, incorporated by reference herein. As is well known, two-component, polyurethane foam is significantly different from a one-component, polyurethane foam. For instance, the chemical reaction of the formulation in a two-component foam occurs when the "A" side (isocyanate) contacts the "B" side whereas a one-component, polyurethane foam undergoes a pre-polymerization reaction within the container and utilizes moisture to effect foaming or frothing as well as curing of the polyurethane. The formulations are markedly different and traditionally the foams, even when sold for the same application, have different characteristics. For example, the two-component foam generally will not expand to the extent of a one-component foam after it has initially foamed on mixing. On the other hand, because of the A/B reaction, a two-component foam will generally have a quicker tack time or shorter open time than a one-component foam. Chemical formulations of the foam, however, can significantly vary such characteristics. In any event, the two-component foam adhesive described in the '342 patent places an adhesive bead extending the length of the tile. While this placement pattern has been tested and approved by the Southern Building Code, Florida for use as a roof-tile adhesive, placing the foam in a bead running the length of the tile is an excessive use of adhesive foam resulting in a higher cost to the roofing contractor than what otherwise is required. Additionally, the two-component application requiring two separate pressurized containers of chemicals, is somewhat unwieldy for use in roofing residential dwellings, especially if the roof pitch is steep.

In late 1995, I began testing a one-component, polyurethane foam supplied by Insta-Foam, Inc. and developed an adhesive pattern to minimize the use of the foam as described in my U.S. Pat. No. 5,895,536. The '536 patent discloses placing two discrete foam deposits (approximately

the diameter of a tennis ball) at diagonally opposing corners of the roof tile. As shown in all the embodiments of my patent, one deposit is placed at the leading edge corner of the tile between the roof substrate and the tile underside while the other foam deposit is placed at the trailing edge corner between the outside surface of the lower tile (which the upper tile overlaps) and the underside surface of the upper tile. While less adhesive is used in the system disclosed in the '536 patent when compared to the adhesive used in the system of the '342 patent, two separate deposits are required per tile and only one deposit per tile extends between the roof and tile. This placement fundamentally limits the adhesion ability of the roof system. However, the use of small paddy sizes addressed the issues of tile displacement resulting from expansion during curing at least to the extent that noticeable tile displacement did not occur if the adhesive was properly applied.

The above represents what is believed a chronological development of the utilization of polyurethane foam as a roof tile adhesive in the United States and this is believed consistent with approvals given by building code regulatory agencies of Dade County, Florida which has approved the use of polyurethane foam when placed in a pattern as described in the '342 and '536 patents.

B) Europe.

In Europe, polyurethane foam has long been used to secure roof tiles. For example, an especially fabricated roofing tile having recesses for receiving polyurethane foam is disclosed in UK patent application No. GB 2169329 A, published Jul. 9, 1986. The assignee's sister company has sold a general purpose, one-component, polyurethane foam for use in adhering roof tiles to roofs. A published application of a one-component foam sold in Europe is to place a bead adjacent the leading edge on the outside surface of one tile contacting the trailing edge of the underside surface of a higher tile. Another common application of polyurethane foam is to spray the foam from the inside of the building to fill any cracks between tiles as well as to secure the tiles to longitudinally extending rafters. It is believed that European companies, including assignee's sister company, have sold one-component foams for roofing applications since as early as 1988.

C) Adhesive Application.

Apart from polyurethane foams, special roof tile adhesives have been developed for securing roof tiles to the roof substrate. In particular, Ohio Sealants, Inc. has developed a roof tile adhesive marketed under its Pro Series® RT600 brand name which has been certified by Dade County for repair of existing roof tiles. Specifically, certified repairs require the removal or the lifting of an existing loose tile sufficient to enable the application of a minimum 1"×1" bead of adhesive to the existing mortar pad so that both the mortar pad and the under side of the tile are in contact with adhesive and in addition, a ⅜" thick by 2" long bead of adhesive must be applied to the head of the previous tile. Generally, specially formulated, one component, roof sealing adhesives are sold in caulk-type containers which are suitable for repairing existing tiles as opposed to laying courses of tiles covering the entire roof.

SUMMARY OF THE INVENTION

Accordingly, it is a principal object of the present invention to provide a roof construction, preferably using a one-component, polyurethane froth, which deposits a single adhesive pattern per roof tile in a manner which increases the strength of the bond between tile and roof while using a minimal amount of adhesive.

This object, along with other features of the invention, is achieved in a method for applying roof tiles to a roof with one-component, polyurethane adhesive where each roof tile has opposing leading and trailing edges intersecting with opposing side edges, an underside surface adapted to face the roof and an outside surface adapted to face the elements when the tile is installed on the roof. The method includes the acts of dispensing, for each tile, the adhesive in an integral, U-shaped, sandwich pattern. The sandwich pattern has top and bottom adhesive leg deposits extending from the tile's leading edge a distance towards the trailing edge adjacent the tile's outside and underside surfaces, respectively, and a bight adhesive deposit adjacent to and extending away from the leading edge but integral with and connecting the top and bottom leg deposits. The method includes positioning an upper tile to partially overlie an immediately adjacent lower tile so that the upper tile's leading edge is adjacent the roof while the upper tile's trailing edge extends past the leading edge of an immediately adjacent lower tile whereby the U-shape pattern of the lower tile is sandwiched because i) its bottom leg deposit is in contact with the roof and the underside of the lower tile, ii) its top leg deposit is in contact with the outside surface of the lower tile and the underside surface of the upper tile and iii) its bight portion is in contact with the roof, the underside surface of the upper tile and the leading edge of the lower tile thereby establishing adhesive contact between the roof and both tiles at positions adjacent the leading and trailing edge of the tiles. The method includes covering the roof by laying tiles side by side while repeating the dispensing and positioning acts for each placed tile to form longitudinally extending tile courses, each course, with the exception of the lowest first course, overlying a lower tile course and each course, with the exception of the last, highest course, being overlaid by a higher course whereby, with the exception of the first and last courses, the tiles are secured to the roof by depositing a single, U-shaped sandwich pattern on each tile.

In accordance with another aspect of the invention, the U-shaped sandwich adhesive pattern may be formed in several different ways. In one embodiment, the U-shaped sandwich pattern is formed by continuously applying an integral bead of adhesive extending from the underside of any given tile, around the leading edge of the given tile and on the outside surface of the given tile.

In accordance with yet another embodiment of the invention, any given tile in the second and subsequent courses is initially laid so that its trailing edge overlies a lower tile with a portion of its trailing edge in contact with the U-shape adhesive pattern of the lower tile and the U-shape pattern for the given tile is then formed by continuously dispensing an integral bead of adhesive from the underside of the given tile, around the leading edge of the given tile and onto the outside surface of the tile or from the outside surface of the given tile about the leading edge of the given tile to the space between the underside of the given tile and the roof. Preferably, the leading edge of the given tile is lifted when the bottom leg of the adhesive U-shape sandwich pattern is dispensed.

In accordance with another embodiment, the integral, continuous U-shaped pattern is formed on any given tile for the second and subsequent tile courses in two steps by first dispensing a bead of adhesive comprising the bottom leg of the pattern onto the roof (or alternatively, on the tile underside) and dispensing, in a second step, a second bead onto the outer surface of the given tile, after the given tile has been laid over a lower tile so that its leading edge is in contact with the bottom leg adhesive deposit. Significantly,

the second bead is dispensed past and beyond the leading edge of the given tile to insure formation of the bight portion of the U-shaped pattern before tack free or open time of the foam formulation has elapsed whereby the top, bottom and bight portions of the pattern are formed in an integral unitary pattern without visible knit lines and completely extending between tile and roof areas in sealing contact therewith.

In accordance with another aspect of the invention, a method for installing roof tiles onto a roof is provided. The roof tiles having opposing trailing and leading edges intersecting opposing side edges and underside and outside surfaces. The method includes the acts of a) dispensing a one-component, polyurethane froth in a U-shape pattern extending from the underside of any given tile around the leading edge of the given tile to the outside of the given tile and b) placing a tile in overlapping relationship to a lower tile whereby the adhesive on the underside of the given tile contacts the roof adjacent the leading edge of the given tile while the underside of the given tile adjacent the trailing edge contacts the adhesive pattern dispensed on a lower tile to establish sealing contact between the underside of a given tile adjacent its trailing edge with the outside of the lower tile and between the underside of the given tile adjacent its leading edge with the roof.

In accordance with another aspect of the invention, an improvement is provided for a roof having a substrate, an underlayment covering the substrate and a plurality of roof tiles adhesively affixed to the substrate. The improvement comprises each roof tile being affixed to the roof by a one-component adhesive applied to individual roof tiles of the plurality of roof tiles in a U-shape, continuous sandwich pattern, one pattern for each roof tile. The pattern includes a bottom leg adhesive deposit between the underside of any given roof tile and a roof substrate, a top leg adhesive deposit between the outside of the given tile and the underside of any overlying tile and a connecting bight adhesive deposit extending beyond the leading edge of the given tile and vertically extending between the underside of the overlying tile and the roof substrate.

It is a general object of the invention to provide a system, method and apparatus, for applying one-component adhesive, particularly a one-component polyurethane froth or foam, to secure roof tiles to a roof.

It is another object of the invention to provide a roof construction system for adhering roof tiles to a roof, particularly roofs for residential dwellings, which is an improvement over existing methods.

It is aparticularly important object of the invention to provide a roof construction for adhesively securing roof tiles to a roof which has any one or more or any combination of the following features:

a) only one adhesive pattern per tile is required;

b) the adhesive pattern provides improved strength properties over other known methods of adhesive placement;

c) the adhesive pattern provides direct sealing contact from the tile to the roof at two different areas for each tile;

d) the adhesive deposit pattern uses a minimum amount of adhesive to cover any given roof;

e) the adhesive pattern, by its unitary, relatively large structure, is believed able to better distribute stresses attributed to differential thermal expansions between roof and tile;

f) the adhesive pattern system is easy or simple to apply;

g) the adhesive deposit system provides sufficient air flow/drainage between the tiles satisfactory to at least meet any known building code requirements; and/or,

h) the adhesive deposit system allows for quick installation of the roof reducing overall roofing cost.

Another object of the invention is to provide a method for applying roof tiles to a roof which, while using no more adhesive than that of prior art two adhesive pad placement systems, produces not only a stronger, individual tile bond but also bonds both overlied and overlaid tiles to the roof in an interlocking adhesive pattern to increase the effectiveness of the adhesive bond for the entire roof.

These and other objects of the invention will become apparent to those skilled in the art upon reading and understanding the Detailed Description of the Invention set forth below taken in conjunction with the drawings.

BRIEF DESCRIPTION OF THE DRAWINGS

The invention may take form in certain parts and in an arrangement of certain parts taken together and in conjunction with the attached drawings which form a part of the invention using like reference numerals to refer to like parts and wherein:

FIG. **1** illustrates a typical pitched roof upon which roof tiles are attached;

FIG. **2** is a perspective view of a segment of a prior art roof construction utilizing a two-component adhesive foam to adhere a roof tile course to a roof substrate using continuous, linear beads of adhesive foam extending along the entire length of the roof tiles and represents the system described in the '342 patent;

FIG. **2**A is a cross-sectional view of the system shown in FIG. **2** with the tiles having an anchor lug;

FIG. **3** is a perspective view of a segment of a prior art roof construction utilizing an opposing comer one-component foam deposit representative of the system disclosed in the '536 patent;

FIG. **3**A is a cross-sectioned view of the prior art based on a variation of the roof construction shown in FIG. **3** with the adhesive shown displaced from its dispensed position.

FIG. **4** is a perspective view of a section of a roof illustrated by a placement of three courses of flat roof tiles installed thereon using the present invention;

FIG. **5** is a perspective view similar to FIG. **4** illustrating an alternative embodiment of the invention as applied to flat roof tiles;

FIG. **5**A is a cross-sectional view of the flat tile application shown in FIGS. **4** or **5**;

FIG. **6** is a view similar to FIG. **4** but showing the system of the present invention applied with high profile, non-planar roof tiles;

FIG. **6**A is a cross-sectional view of the high profile tiles shown in FIG. **6**;

FIG. **7** is a view of a roof section similar to FIG. **3** for showing the system of the present invention applied to a medium/low profile roof tile;

FIG. **7**A is a cross-sectional view of the medium/low profile tile shown in FIG. **7**;

FIGS. **8**, **8**A and **8**B are planar views showing one way of how the adhesive sandwiched pattern is developed during placement of the tiles;

FIG. **9** is another view showing how the sandwiched pattern can be applied to a roof tile;

FIGS. **10** and **10**A are cross-sectioned step views showing another way to form the inventive sandwich pattern;

FIGS. **11** and **11**A are perspective views showing different shapes of an adhesive deposit making up a portion of the adhesive pattern used in the present invention; and,

FIGS. **12** and **12**A are schematic representations of a tile test.

DETAILED DESCRIPTION OF THE INVENTION

Referring now to the drawings wherein the showings are for the purpose of illustrating a preferred embodiment of the invention only and not for the purpose of limiting the same, there is shown in FIG. **1** a dwelling **10** having a roof **12** disposed thereon at a particular angle or pitch designated by the letter "P" in FIG. **1**. Roof **12** is formed by a plurality of structural members or joists **13** which are longitudinally spaced from one another and extend vertically upward from a lowest most edge or eave **14** of the roof at pitch "P" to a central ridge beam **16** at the roof apex **17** in a conventional manner.

Joists **13** support a roof substrate **20** which covers the roof. Roof substrate **20** is commonly formed of a multiple layer construction and typically includes a sheeting **21** or decking which may comprise plywood, particle board, cement boards, or the like and which are nailed or otherwise mechanically fastened to joists **13**. Over sheeting **21** is an underlayment **22** or final covering or cap sheet which is typically a water resistant material such as roofing felt or tar paper. Underlayment **22** is typically fastened by mechanical connections to sheeting **21** and joists **13**. Roof tiles are directly secured to underlayment **22** except if the pitch of the roof is steep, i.e., over a 7:12 pitch. In such instance, batten strips, shown in phantom in FIG. **1** and designated by reference numeral **24**, which are vertically spaced and extend longitudinally along roof **12** are provided. When batten strips are used, the roof tiles are provided with anchor lugs on the underside of the tiles. The anchor lugs slip over and engage the upper edge surface of a batten strip **24**. For convenience, "roof" as used herein and in the claims includes joist **13**, sheeting **21**, underlayment **22** and batten strips **24** if applicable and includes any construction extending over the walls of a building or dwelling to which roof tiles are secured. "Substrate" as used herein and in the claims and for convenience only means any arrangement of coverings or the like fixed to the joist **13** onto which the roof tiles are attached.

Referring now to FIG. **2** there is shown a prior art roof construction which is typical of the construction described in U.S. Pat. No. 5,362,342. As described in the '342 patent and as shown in FIG. **2**, the construction includes a plurality of medium/low profile roofing tiles **30**. (Tile **30** shown in FIG. **2** has traditionally been referred to as a low profile tile and more recently as a medium profile tile. For consistency in terminology, it will be subsequently referred to herein and in the claims as a low profile tile.) Low profile tile **30** is generally rectangular (as are all the tiles) having opposing leading and trailing edges **31**, **32** intersecting with opposing side edges **34**, **35**. (Leading edge **31** is commonly referred to as the "head" of the tile while trailing edge is commonly referred to as the "nose" or "tail" of the tile. "Leading" and "trailing" will be used throughout the Detailed Description and in the claims and when used with "edge" designate the edge surfaces as shown in the drawings.) Side edges **34**, **35** designate the edge surfaces as shown in the drawings and have interlocking grooves adjacent thereto as shown or, depending on tile configuration, as a part thereof. In addition, low profile tile **30** has a non-planar outside surface **36** and a similarly formed non-planar underside surface **37**. Non-planar surfaces **36**, **37** are formed as a hollow central semi-circular portion **39** flanked by two hollow quarter portions **40**, **41**. The intersection of semi-circular portion **39** with one quarter portion **40** forms generally a flat contact underside rib **43** (i.e., tile pan section) while the intersection of semi-circular portion **39** and the other quarter portion **41** forms a second underside rib **44** (i.e., a tile pan). As shown in FIG. **2**, underside ribs **43**, **44** are positioned closely adjacent underlayment **22** of roof substrate **20**. In accordance with the teachings of the '342 patent, a bead **46** of a two-component polyurethane foam is placed on underlayment **22** extending from leading edge **31** to trailing edge **32** to establish sealing contact between roof **12** and at least one of the underside ribs **43**, **44**. When roof tiles **30** are placed on foam bead **36** they are spaced from underlayment **22** by the bead to insure an air space between tile and roof. (A similar air space is formed by the pad of mortar typically used in conventional applications.) Bead **46** uses a fairly significant amount of polyurethane foam.

This is perhaps best illustrated by referring to a cross-sectional representation of a low profile roof tile **30** fitted with an anchor lug **48** as best shown in FIG. **2**A. The effect of batten strip **24** is to vertically displace low profile tile **30** from underlayment **22** a distance at least equal to the height of batten strip **24**. The two-component bead **46** must extend the distance represented by dimensions "A" at the trailing edge to the dimension "B" at the leading edge **31** of low profile tile **30**. This can be in excess of 2" for conventional tiles having a length between leading and trailing edges **31**, **32** of about 16". At the same time, it is to be recognized that anchor lug **48** and batten strip **24** take up space otherwise occupied by foam.

While a significant amount of adhesive is thus used, a more subtle point relates to the expansion of the foam. As noted in the Background, when a two-component foam is employed, the reaction of the two-components, as they are mixed together, produces the foam. Assuming that the dispensing gun mixes the components at the proper formulated ratio, the chemical will immediately expand within seconds after striking the roof. That is, a two-component foam will typically spray as a liquid onto underlayment **22** and within seconds bead up as a foam. The discussion of "expansion" herein refers to the continued growth of the foam after it has initially formed itself into a foam. As is well known, not all the isocyanate has reacted after the foam is formed. The reaction of the free isocyanate produces closed cells which result in continued expansion of the foam. The reaction continues not only during the open time or tack free time but also after a skin has formed at which time the foam is no longer capable of being used as an adhesive. Curing to a hardened state continues for some time after skinning and although some free isocyanate may react with moisture, the foam does not materially expand further. Thus, to some extent, a two-component foam is somewhat suited for the excessive foam application as shown in FIGS. **2** and **2**A since low profile tiles **30** will not significantly move as the two-component foam cures to its hardened state. The "down side" to the two-component foam is that the tack free time or open time for a two-component foam is relatively short so that only a set number of tiles can be laid before the foam skins. In contrast, one-component foams use moisture from the air and the substrate to cause chemical reaction with the isocyanate.

A one-component foam will quickly expand to a froth or foam when exposed to atmosphere. In fact, the preferred one-component foam used in the invention is dispensed as a

froth as it leaves the gun similar to how shaving cream is dispensed from an aerosol container. In contrast to typical two-component foams, typical one-component foams will likely expand more after the one-component urethane froths until the foam cures. While the expansion, as a percentage, is not significant, when a one-component foam was used in an excessive foam application such as disclosed in the '342 patent, the tiles could be lifted after they were laid. It is possible that if a one-component foam was used for the pattern disclosed in the '342 patent, that there could be varying expansions of the foam as it cured resulting in uneven tile displacement. If the tiles are displaced unevenly, the adhesive is unacceptable. On the other hand, the tack free or open time for a one-component foam is generally accepted as being longer than a two-component foam. Again, this discussion is predicated on generally accepted formulations of two-component and one-component foams. Special formulations can be had which vary the expansion characteristics of the foam, the adhesive characteristics of the foam, and the tack free time or open time of the foam whether the formulation relates to a one-component or to a two-component foam.

Referring now to FIG. **3** there is shown a prior art roof construction which is typical of the construction illustrated in my '536 patent. The roof construction is illustrated for a flat tile **50** which, like low profile tile **30**, has leading and trailing edges **31**, **32**, respectively which intersect with opposing side edges **34**, **35**. The tile shape adjacent side edges **34**, **35** is grooved as shown to provide an interlocking engagement with adjacent tiles. Flat tile **50** has a planar outside surface **51** and a generally planar underside surface **52**. Typically, underside surface **52** comprises a series of longitudinally extending ridges or ribs forming grooves therebetween (not shown) except for flat clay tiles which are smooth.

In the roof construction described in my '536 patent, a leading edge deposit of foam in the form of a leading edge pad or paddy **54** is deposited between roof underlayment **22** and underside surface **52** of any given flat tile **50**. Specifically, leading edge paddy **54** is placed at a comer formed between leading edge **31** and one of the side margins **34** or **35**. A second foam deposit in the form of a trailing edge pad or paddy **55** is placed between underside surface **52** of any given tile and outside surface **51** of an adjacent lower tile. Trailing edge paddy **55** is placed adjacent trailing edge **32** and an opposing side margin **34** or **35** but at the opposing comer to that occupied by leading edge paddy **54**, so that leading edge paddy **54** and trailing edge paddy **55** lie on a diagonal. This is specifically shown in FIG. **3**, by the leading edge paddy designated **54**A provided for flat tile **50**A. Paddy **54**A extends between roofand tile **50**A. A trailing edge paddy **55**A is shown for roof tile **50**A and the comer-to-comer diagonal is indicated by dot-dash line **56**. Paddy **54**A extends between tiles **50**A and **50**B. Tiles **50** are laid in longitudinally extending roof tile courses and the arrangement illustrated in FIG. **3** includes the lowermost or first roof tile course which overlies roof eave **14** and necessitates additional foam paddies **58** adjacent but spaced from trailing edge **32** of the first course tiles. Additionally, because of the eave overhang of the first course tiles, trailing edge paddy **55** has to be likewise spaced from trailing edge **32** of the tiles in the first roof course. Tiles in the second and subsequent courses (and until the last course at ridge beam **16**) are laid so that the tiles trailing edge **32** always overlaps the underlying immediately lower tiles leading edge **31** to define an overlap designated by the dimension shown as "D" in FIG. **3**. Paddies **54**, **55** are sized to a dispensed area fitting within this overlap distance "D".

The roof construction of my '536 patent reduces the volume of polyurethane foam used to adhere the roof tiles to roof **12**. A more subtle but critical result is that use of less foam results in the weight of the tile allowing the paddy to expand during cure without raising the roof tile. Simply put, less foam reduces the foam expansion force so that the weight of the tile can force the foam to expand or move into any free space under the tile without lifting the tile. It should be noted that in the roof construction shown for my prior art '536 patent, the tile is secured to roof **12** only by leading edge paddy **54**. Trailing edge paddy **55** is adhesive connecting one tile to another. A wind force directed against the tile such as shown by reference numeral **59** in FIG. **3** is resisted by only one paddy. That is, the two paddies together provide an adhesive connection from the roof to the tile to an overlying tile and that connection is, as shown in FIG. **3**, separated from each other. Thus, the strength of the bond is limited. This invention uses an entirely different placement pattern to produce a stronger bond with a one-component foam that does not adversely affect tile placement because of expansion of the foam.

My '536 patent discloses that the paddies are placed in opposite corners at the undersides of the roof tile. When the tiles are installed onto the roof, and whether or not the tile courses are offset relative to one another, the paddies do not overly one another. Despite the teaching of the '536 patent to locate the paddies in opposite tile corners, roof installations have been observed where the paddies are located more towards the center of the tile so that the pad of one tile overlies the pad or at least a portion of the pad of an underlying tile when the overlying tile is pressed down into the lower tile. In most tiles, there is an anchor lug or ridges formed on the underside of the tile which directs or receives the adhesive displaced from the adhesive pad when the tile is pushed towards the roof to seat the tile. However, flat clay tiles traditionally have a flat smooth surface. When the tile is seated the vertical space between tile underside **37** and roof **12** near tile leading edge **31** and the vertical space between tile underside **37** and outside surface **36** of the overlaid tile near tile trailing edge **32** is reduced. I believe that for flat clay tiles, the foam in pads **54**, **55** moves outwardly in all directions and pads **54**, **55** increase in size. In my '536 patent pad shapes within the specified gram size limitations comprise a rectangular pad 2"×3" by 1" high and a circular foam of about 2½" by 1" high diameter. The areas covered by these pads, as dispensed, are 6 in^2 for the rectangular pad and about 5 in^2 for the circular pad. The pad heights are typically reduced from 1" to about ½" when the tiles are pushed into their laid set condition. The pads will typically expand in coverage to about 10 in^2. Thus, the diameter of the circular pad will increase to slightly over 3½" and the rectangular pad will increase to about 2⅝"× 3⅞". The overlap "D" varies by manufacturer but is generally about 3". (Overlap "D" varies by tile type and code, typically from a minimum of about 2" to a maximum of about 4". Tile sizes vary significantly. Nominally, tiles have a width of about 9–10" and a length of about 14–18". However, these ranges could be significantly expanded both at the high end and the low end. European tiles are significantly smaller. Certain cement tiles are significantly larger.) The rectangular pad in its flattened state will generally stay within the overlap. A portion of the circumference of the round pad will extend beyond the leading edge **31** of the overlaid tile. This is illustrated in FIG. **3**A where dash lines **49** indicate the general position occupied by pads **54**, **55** when dispensed. The pads are drawn in their flattened, displaced condition and when they are applied, not at the

comers, but at the center portions of the tile. A circumferential portion of each pad **54**, **55** extends beyond the leading edge **31** of the overlaid tile but the foam does not extend between the pads. Unless the pad size is significantly increased, foam extending past leading edge **31** does not establish contact between roof **12** and underside surface **37** of the overlying tile. Further, even if the pads were significantly oversized, and misplaced to somehow establish contact, the tiles are normally laid in a course progression. The tack free time of leading edge pad **54** may have lapsed when the overlying tile is placed over a tile establishing visible knit lines (non-adhesion between the two foams) between the foam of the two oversized pads.

It should also be noted that I have often observed tile applications with mortar. In those applications where the mortar pad is sometimes haphazardly placed towards the upper center of the tile, the mortar can also be displaced beyond leading edge **31** when the tile is pressed down into the mortar. However, bonding by the mortar between the higher tile and roof is not believed to occur significantly. In a mortar application, there is also no bonding between the tiles. Mortar is usually not placed between tiles except to seal the exposed edges at the ends of the tile courses, i.e., rake.

My observations of how I believe the foam and mortar is being displaced when a flat tile is pushed into the roof to set the tile in place, is utilized, in part, to form one of the underpinnings of my present invention.

Referring now to FIGS. **4**, **5** and **5A**, there is shown the roof construction of the present invention applied to flat tiles **50**. The roofing construction includes a U-shaped pattern **60** of polyurethane adhesive purposely dispensed as a "U" form extending about leading edge **31** of a tile such that when the tiles are placed in position, the U-shaped pattern **60** is sandwiched between roof, tile and overlying tile. U-shaped pattern **60** comprises a top leg deposit **62**, a bottom leg deposit **63** and a bight deposit **64** interconnecting top and bottom leg deposit **62**, **63** into a unitary, integral pattern. When the tiles are pushed into position U-shaped pattern **60** increases in areas to establish sealing contact and adherence of the tiles to the roof when the polyurethane cures. Significantly bight deposit **64** may dimensionally increase more than top and bottom deposits **62**, **63** since bight deposit **64** may receive adhesive therefrom as described with reference to the prior art. This assures that bonding occurs between the underside surface of the overlying tile and the roof.

While in accordance with the broader aspects of the invention, U-shaped pattern **60** could comprise any number of adhesive compositions (including a two-component polyurethane foam), it is a specific inventive feature of the construction to form a unitary, contiguous U-shaped pattern with a one-component polyurethane and specifically a one-component polyurethane froth. In the preferred embodiment, the adhesive pattern is formed from assignee's one-component polyurethane froth sold under the brand name Handi-Stick® Roof Tile Adhesive. However, a number of one-component polyurethane foams can be used. For example, a foam sold under the brand name Tile Bond® manufactured by Insta-Foam Products, Inc. may be used. The preferred one-component polyurethane foam or froth used in the present invention is classified as a low density, (typically closed cell) adhesive foam having minimum expansion characteristics. Some specific discussion of typical characteristics of one-component and two-component foams will be helpful in understanding the present invention. A high density foam is typically understood as a foam that has a density greater than 4 lbs/ft^2 when it is dispensed as a foam in a free, unrestrained state. In the present invention a one-component, low density foam having a density in the range of anywhere from 0.8 to 4.0 lbs/ft^2 and preferably in the range of 1.1 to 2.5 lbs/ft^2 is used. When a tile is pressed down, the foam in U-shaped pattern **60** (during the open time) will laterally displace itself to an open area (i.e., squish) although at some discrete pin head area, it may be restrained and increase in density at that area perhaps 1 lb/ft^2. Overall, the density of the foam will not increase when the tile is pressed down. U-shaped pattern **60** has a weight of anywhere from about 9 to 15 grams and preferably from 12–14 grams. This weight is believed about equal to that used in the 2 paddy prior art system disclosed in the '536 patent. Alternatively stated the surface area of a roof tile is about 1.2 sq. ft. and after the tiles have been assembled in overlying position and pushed down into the foam, the surface area of the tile occupied by U-shaped pattern is about 9 to 12 in^2 and preferably about 10 in^2. U-shaped pattern **60** when dispensed as a continuous bead and before being pressed by the tile occupies a tile (to roof) area of about 6 in^2. The density of the foam has application to the system not only as a measure of how much foam is used to secure the roof tile to the roof but also as to the vertical spacing between the tile and roof. Obviously, a high density foam will not displace under the weight of the tile to the extent of a low density foam and will not give the same surface area contact.

However, the expansion of a one-component foam, after it has been initially dispensed to assume its free standing state continues to expand as the free isocyanate continues to react with moisture until the foam is completely cured. The expansion of the one-component foam after the foam has been dispensed and assumes its free standing state (almost immediately but not more than 2–3 seconds after dispensing) is no more than 50% and preferably no more than about 20% of its free standing volume. In summary, a preferred low density foam (as defined) dispensed in the pattern (as defined) and having desired expansion characteristics (as defined) will provide desired tile to roof spacing having desired bond strength without causing tiles to become uneven after the foam has cured.

While the inventive system could be applied if the adhesive is a two-component polyurethane foam, there are further advantages to a one-component foam relating to the application of the system of the present invention. Because a one-component foam is moisture cured, the roofing application can start in early morning when dew or moisture is on the roof. The installer does not have to wait until the moisture is evaporated as in a two-component application. The open time or tack free time for a one-component application is significantly longer than for a two-component application. The open time for the Handi-Stick, one-component adhesive is about 4–5 minutes while the open time for a two-component foam is about 30 to 45 seconds. (These time, of course, assume "normal" or "ambient" temperatures and humidity.) As will be noted, Handi-Stick is dispensed as a froth which makes it desirable, (not however necessary) to continuously dispense U-shaped pattern **60** as an integral, unitary pattern whereas other one-component foams may bead only after impact with an object. (To avoid confusion in terminology, "foam" when used herein includes froth as well as foam whether produced by one-component or two-component polyurethane adhesives. "Froth" means froth—a foam formed as it leaves the nozzle in distinction to chemical reactions forming a foam after the chemicals leave the gun such as when they strike the roof or tile.) The cure time or the time to bond the tile to the roof for a

one-component foam is about 2 to 4 hours while the cure time for a two-component foam is typically ½ to 1 hour. The time of course to "chemically" cure the foam is typically considered to be 24 to 48 hours although, technically, the time to completely react all the isocyanate may continue for a much longer time. However, it is believed desirable for roofing applications to have the longer tack free time before skinning of the one-component foam occurs so that U-shaped pattern **60** can be formed as an integral structure. While the longer cure time for a one-component foam may be viewed, initially as a detriment, in practice there is no detriment because the roof is laid from eave upward so the installer is not walking on the tiles after they have been laid.

As best shown in FIG. **5**A, when tiles **50** are positioned onto roof substrate **20**, U-shaped pattern **60** becomes sandwiched between tiles and the roof. Specifically, top leg deposit **62** is in sealing contact with outside surface **51** of a lower tile **50**B and the underside surface **52** of an immediately adjacent higher tile **50**A. The sealing contact extends substantially the distance of overlap D from leading edge **31** towards trailing edge **32** of lower tile **50**B. Bottom leg deposit **63** is in sealing contact with roof substrate **20** and the underside **52** of lower tile **50**B from leading edge **31** towards trailing edge **32**. If the adhesive deposit stopped here, there could be some resemblance to the FIG. **3** prior art in that top leg deposit **62** contacts two adjacent tiles similar to prior art trailing edge paddy **55** and bottom leg deposit **63** contacts tile and roof similar to prior art leading edge paddy **54** except that leg deposits **62, 63** overlie one another (and by definition extend a slightly longer distance in that they begin from leading edge **31** and are not proximate to the leading edge). Significantly, bight deposit **64** is in sealing contact with roof substrate **20** and underside surface **52** of higher tile **50**A. This is an additional roof contact extending from and wrapping about leading edge **31** not present in the prior art and contiguous with top and bottom leg deposits **62, 63**. Also, significantly, bight deposit **63** is tying the tile-to-tile sealing contact into the roof-to-tile sealing contact increasing the overall strength of the bond. That is, U-shaped adhesive pattern **60** is bonding underside surfaces **51** of both tiles **50**A, **50**B to roof **12** while also tying the two tiles together. Generally speaking, top and bottom deposits **62, 63** overlie one another, but in application, they may be slightly skewed depending on how the froth is dispensed. It is preferred that bottom leg deposit **63** extend longitudinally further towards trailing edge **32** than top leg deposit **62** although the invention will function with equal length leg deposits. Preferably, leg deposits **62, 63** are in the form of an elongated rectangular bead, or alternatively, can be in the form of an oval bead as shown in FIGS. **11** and **11**A. FIG. **11** shows top leg deposit **63**, preferably having a width dimension "W" of about 4" to 4½" (extending between opposing side edges **34, 35**), a length dimension "L" of about 1½" to 1¾" (extending from leading to trailing edges **31, 32**) and a height dimension "H" shown in FIG. **11**A of about 1" to 1½". Preferably, the "W" dimension of bottom leg deposit **64** will be 1 to 1.25 times the "W" dimension of top leg deposit **63** to provide increased resistance to wind lift. Bight deposit **64** will have the same width as top deposit **62** (or bottom deposit **63**) and a height equal to twice the height "H" of top deposit **62** (or bottom deposit **63**) plus the thickness of the tile. The length of bight deposit **64** will be at least equal to the height of top deposit **62** (or bottom deposit **63**). Top and bottom leg deposits **62, 63** can be formed elliptical as shown in FIG. **11**A (width of about 3½ and length of about 2½") provided that the width edge of the ellipse completely extends to leading edge **31** so that bight portion can be formed throughout the length of the ellipse. All dimensions are given in dispensed form. Other dispensed shapes may be used.

When the tiles are placed onto the dispensed froth, before the froth reaches its tack condition, the low density foam will be reduced to about ¾ its height. The froth will spread to other areas including spreading into bight portion **64** from top and bottom deposits **62, 63**. However, froth dispensed in bight portion **64** will always spread increasing bight portion **64** size and bonding area when the tile is initially positioned. When the tile is pushed towards the roof to establish the final tile position further dispensing the foam will result typically reducing its height to about ½ of its dispensed height. The bond in all instances is unitary.

Again, what the U-shaped pattern is accomplishing with a minimal usage of foam, is to provide (when compared to my prior invention) an increased roof-to-tile contact area while directly tying the overlaying and the overlaid tiles into the roof as well as tying the tiles together. Additionally, because of the relatively large area contact of U-shaped adhesive pattern **60** in a unitary structure, it is believed that the adhesive will be better able to distribute the stresses resulting from differential temperature expansion between roof tiles and roof substrate.

Referring still to FIGS. **4** and **5**, there is shown a portion of tile coverage including a portion of a first or lower most tile course **70**, a portion of a second tile course **71** overlying first tile course **70** and a portion of a third tile course **72** overlying second tile course **71**. In FIG. **4**, the tiles in each tile course are longitudinally shifted a distance approximately equal to ½ the distance between tile side edges **34, 35** relative to the tile positions of the immediately adjacent upper and lower tile courses. For flat tiles **50**, this pattern of laying the tiles is generally recommended by the tile manufacturers. In the tile offset pattern position illustrated in FIG. **4**, U-shaped adhesive pattern **60** may be optionally placed about the mid-point of leading edge **31**. In this arrangement, it is possible by using only one U-shaped pattern **60** per tile to establish for each separate tile a three position sealing contact with roof **12**. For example, flat tile designated **50**C has contact with the roof by adhesive pattern designated **60**A as described above. In addition, contact with the roof is also established by adhesive patterns designated as reference numerals **60**B and **60**C. Three tile to roof adhesions or bonds are thus made.

However, it must be clear that the invention is not necessarily limited to a particular placement of U-shaped adhesive pattern **60** in a specific position about leading edge **31** of any given tile. In fact, U-shaped adhesive pattern **60** can be placed anywhere along and about leading edge **31** and several different positions are illustrated in FIG. **5**. Improved bonding will occur no matter where the U-shaped pattern is dispensed along leading edge **31**. In FIG. **5**, tiles **50** are not offset and tile courses **70, 71, 21** are vertically aligned with one another as shown. U-shaped adhesive pattern **60** can be placed at various positions along and about leading edge **31** as shown by dot-dash centerlines designated by reference numerals **74, 75** and **76** extending between U-shaped adhesive patterns of upper and lower tiles. It should also be noted that for the first or eave tile course **70**, two lower pads of adhesive **78** are placed adjacent to but spaced from trailing edge **32** of tiles **50** in first tile course **70**. Two pad deposits **78** are preferred.

Referring now to FIGS. **6** and **6**A there is shown an application of U-shaped adhesive pattern **60** of the present invention to a high profile tile **80**. High profile tiles have a

non-planar outside surface **81** and a non-planar underside surface **82** which in cross-section somewhat assumes a "S" configuration as shown for diagrammatic purposes but in practice is more in the shape of a flat converted to a semi-circular or barrel portion. The portion of the "S" which contacts underlayment **22** is referred to as a pan section **84** of high profile tile **80**. U-shaped adhesive pattern **60** must be placed in the pan section. Further, most high profile tiles **80** are provided with an anchor lug **85** in its pan section adjacent leading edge **31**. Typically, anchor lug **85** for high profile tile **80** has a depth of about ⅝" to ¾" and batten strips **24** are ⅝" thick. Adhesive pattern **60** as shown somewhat by adhesive pattern **60**D in FIG. **6**, and more particularly, by bottom leg deposits **63** in FIG. **6**A, extend about and around anchor lug **85** and batten strip **24** (if used). Further, high profile tiles **80** are laid in tile courses which are not longitudinally offset and resemble the pattern disclosed in FIG. **5**. Thus, adhesive deposits **60** as shown in FIG. **6** are positioned in alignment with vertically extending centerlines designated by reference numeral **87** which align with side edges **34**, **35**. U-shaped adhesive pattern **60** comprises the same bead deposits and functions in the same manner for high profile tile **80** as it does for flat tile **50** as explained with reference to FIGS. **4**, **5** and **5**A.

Referring now to FIGS. **7** and **7**A, the roofing construction of the present invention is applied to low profile tiles **30**. Low profile tiles **30** are typically provided with an anchor lug **88**, best shown in FIG. **7**A, at each underside rib or pan section **43**, **44** adjacent leading edge **31** and typically having a depth of about ½". As with high profile tile **80**, adhesive U-shaped pattern **60** must be applied to each low profile tile **30** at one of its underside rib or pan sections **43**, **44** (conceptually adhesive pattern could be applied to both) and about leading edge **31**. U-shaped adhesive pattern **60** can be applied in a pattern where U-shaped adhesive deposits formed on higher and lower tiles are vertically aligned with one another such as shown by centerline **90** in FIG. **7** or are vertically offset to extend on a diagonal such as shown by centerline **91** in FIG. **7**.

There are several ways in which adhesive pattern **60** can be dispensed in the desired sandwiched configuration. Perhaps the simplest way to dispense U-shaped adhesive pattern **60** is diagrammatically illustrated in FIG. **9**. In FIG. **9**, a dispensing nozzle **95** of a gun (or valve of a pressurized container) continuously dispenses a foam bead from the tile's outside surface **36**, **51** or **81** to the tile's underside surface **37**, **52**, or **82** or from the underside to the outside of the tile. This method of forming the adhesive is particularly applicable for use with assignee's one component Handi-Stick adhesive which produces a froth immediately upon expelling the adhesive from the gun nozzle. Thus, a froth having a shaving lather consistency is dispensed from the gun nozzle. It can therefore be applied by resting the tile on its trailing edge **32** and dispensing a bead about leading edge **31**, after which the tile is simply positioned in place. This type of application could not be easily accomplished with a two component adhesive.

A more systemic approach is illustrated in FIGS. **8**, **8**A and **8**B. In FIG. **8**, bottom leg deposit **63** is laid on underlayment **22** extending a desired distance from a tile chalk line **96** (and extending beyond the chalk line to start forming bight portion **64**). Alternatively, bottom leg deposit **63** can simply be applied as a bead to the underside of the tile. In FIG. **8**A, a tile, for example flat tile **50**C, is laid in position relative to chalk line **96** so that it overlies a lower tile shown as **50**A. When tile **50**C is laid on underlayment **22**, bottom leg deposit **63** spreads out as it flattens and extends past chalk line **96**. In FIG. **8**B, a second bead is now dispensed on outside surface **51** of tile **50**C. The slight portion of bottom leg deposit **63** extending beyond chalk line **96** serves as a guide to insure that the top bead overlies bottom leg deposit **63**. This bead of adhesive as it is deposited, forms top leg deposit **62**. Importantly, the froth deposit application continues past chalk line **96** to form contiguous bight deposit **64**. Because a one-component foam is used and the U-shaped pattern **60** is formed well within the open time period, the foam continuing to be dispensed after the top bead is formed is able to flow into, meld and fuse with bottom leg deposit **63** and without forming any knit lines (at least knit lines which are visible to the eye) between them thus producing an integral U-shaped structure when the next tile is placed in overlying relationship to tile **50**A. U-shaped pattern **50** will further flatten in its dispensed top and bottom leg portions **62**, **63** and its bight portion **64** as tile **50**A is pushed downward into its laid position.

Still another way to form U-shaped adhesive pattern **60** is disclosed in FIGS. **10** and **10**A. In FIG. **10**, a tile, for example flat tile **50**A, is placed in its vertical overlying position over lower tile **50**C which has its U-shaped adhesive deposit **60** formed thereabout as shown. Leading edge **31** of tile **50**A is lifted up and the user inserts dispenser nozzle **95** to dispense bottom leg deposit **63**. Tile **50**A is then released and the dispensing nozzle **95** continues to dispense a froth bead forming bight deposit **64** and top leg deposit **62**. When the tile is equipped with an anchor lug it is possible to modify the application illustrated in FIG. **10** in that the dispensing nozzle can simply dispense the foam bead behind and on the side of and in front of the anchor lug without lifting the tile. In either instance, after U-shaped adhesive pattern **60** has been formed as shown in FIG. **10**A, the tile is then placed firmly down into contact with U-shaped adhesive **60** at its trailing edge. As will be noted, the tiles will be laid in vertical progression from lowest to highest and not necessarily longitudinally in tile course. If the installer lays several tile courses, the U-shaped pattern is not to be applied until the overlying tile is ready for positioning. Removable shim blocks may be inserted.

Tests have been conducted which demonstrate that the roofing construction of the present invention has increased bonding strength when compared to my prior invention disclosed in the '536 patent. The present invention and my prior invention use approximately similar amounts of one-component foam when covering a roof.

A test was conducted to obtain some evaluation of the bonding characteristics of the present invention when compared to the paddy placement of my prior invention disclosed as prior art in FIG. **3**. This test was not the type of test described in my '536 patent. Particularly, the overlying tile pattern in which U-shaped adhesive pattern **60** would produce a number ofbond benefits as described above was not replicated. Instead, U-shaped adhesive pattern **60** was simply formed about leading edge **31** of the tile and the tile pulled from the roof substrate. Similarly, the paddy placement arrangement discussed in my '536 patent was likewise simply placed on a single tile and the tile pulled from the roof. The test arrangement for the present invention is schematically illustrated in FIG. **12** and the test arrangement applied to FIG. **3** prior art is schematically illustrated in FIG. **12**A. More particularly, flat concrete tiles with an anchor lug was adhesively secured to roof substrate **20** as shown. Adhesive deposits for both systems were kept at the same approximate weight of about 12 to 14 grams. A hole was drilled through the deposits into the top surface of tile **50** and

an anchor pin **100** was attached. A load cell (**500** Westweight load cell with a computerized readout) was attached to anchor pin **100** and the tile was pulled from roof substrate **20** with the maximum force recorded by the losd cell. Tests were conducted at a temperature of about 85° F. with a humidity of 92% using the same adhesive foam, i.e., assignee's Handi-Stick® Roof Tile Adhesive. In all cases, the foam had only cured for 8 hours so the force levels recorded for both adhesive configurations would be expected to increase had the foam thoroughly cured although the overall results would not be expected to change. Results of the tests are tabulated below and show that the bond strength provided by the U-shaped adhesive of the present invention is stronger than the bond strength of the prior art system shown in FIG. **3**. When lift tests are conducted with the tiles in their proper overlying relationship, the full benefit of bight portion **64** can be evaluated and it is expected that the bonding strength of the present invention for the roof system as a whole will show even more of an improvement than that shown in the results tabulated below:

Test	U-shaped Adhesive	Prior Art FIG. 3
1	174	110
2	122	123
3	125	172
4	114	151
5	160	101
6	178	146
Total	873	803
Average Force (ft-lbs)	145.5	133.8

The invention has been described with reference to a preferred and alternative embodiments. Modifications and alterations will become apparent to those skilled in the art upon reading and understanding the Detailed Description of the Invention set forth above. It is intended to include all such modifications and alterations insofar as they come within the scope of the present invention.

Having thus defined the invention, it is claimed:

1. A method for applying roof tiles with one-component, polyurethane adhesive to a roof, each roof tile having opposing leading and trailing edge portions intersecting with opposing side marginal edge portions, an underside surface adapted to face the roof and an outside surface adapted to face the elements when the roof tile is installed on the roof, said method comprising the acts of:

a) dispensing for each tile, the adhesive as a bead in a contiguous integral U-shaped, bead pattern having top and bottom adhesive leg deposits extending from the leading edge portion a distance towards the trailing edge portion adjacent the upper and underside surfaces, respectively, of the tile and a bight bead adhesive deposit adjacent to and extending away from the leading edge portion, but integral with and connecting the top and bottom leg bead deposits;

b) positioning an upper tile to partially overlie an immediately adjacent lower tile in that the upper tile's leading edge portion is adjacent the roof while the upper tile's trailing edge portion extends past the leading edge portion of an immediately adjacent lower tile so that the U-shaped bead pattern of the lower tile is sandwiched between roof tiles and roof by i) its bottom bead deposit in contact with the roof and the underside of the lower tile; ii) its top bead deposit in contact with the outside surface of the lower tile and the underside surface of the upper tile and iii) its bight bead deposit in contact with the roof, the underside surface of the upper tile and the leading edge portion of the lower tile; and pressing the upper tile against the roof and lower tile to cause the adhesive in the U-shaped sandwiched bead pattern to spread out into additional sealing contact areas while the tile is vertically aligned with an adjacent tile at a desired spaced distance from the roof;

c) laying tiles side by side while repeating acts (a) and (b) for each placed tile to form a longitudinally extending tile course, each course, with the exception of the lowest first course, overlying a lower course, and each course, with the exception of the last, highest course, being overlaid by a higher course whereby, with the exception of the first and last courses, the tiles are secured to the roof by placing a single U-shaped bead pattern on each tile which becomes sandwiched into sealing contact with the roof and adjacent tiles as the tiles are laid into position; and,

d) thereafter, bonding the tiles to the roof after the polyurethane adhesive has cured.

2. The method of claim **1** wherein said act of dispensing includes the act of continuously dispensing the leg deposits and the bight deposit onto any given tile.

3. The method of claim **2** wherein the pattern is deposited onto any given tile before the tile is placed onto the roof.

4. The method of claim **2** wherein any given tile is positioned to overlie a lower tile and contact the U-shaped pattern on the lower tile before the U-shaped pattern is formed on the given tile.

5. The method of claim **4** wherein the given tile is held at its leading edge away from said roof while the bottom adhesive deposit of the pattern is dispensed between the underside of the given tile and roof.

6. The method of claim **1** wherein the bottom deposit of the pattern is dispensed on the roof prior to positioning any given tile to overlie a lower tile and the top deposit and bight deposit is formed after the given tile is positioned over a lower tile to contact the top deposit of the lower tile's U-shaped pattern prior to laying the tile and before the open time of the one component adhesive has expired so that the bight portion is contiguous with the top and bottom leg portions without visible knit lines being formed.

7. The method of claim **1** wherein the tiles are selected from the group of tiles consisting of high profile tiles having a non-planar exterior configuration, low profile tiles having a generally non-planar exterior configuration and flat tiles having a generally planar exterior configuration.

8. The method of claim **1** wherein the roof has a plurality of longitudinally extending, vertically spaced batten strips, the tile has an anchor lug extending from its underside adjacent to its leading edge and the positioning act including placing a given tile in overlying relationship to a lower tile by resting the lug of the given tile on a batten strip.

9. The method of claim **8** wherein the U-shaped pattern is formed by dispensing the one-component adhesive in the bottom deposit after any give tile has been positioned over an underlying tile to contact the U-shaped pattern of the lower tile.

10. The method of claim **1** wherein the adhesive is a low density, moisture cured one-component, polyurethane froth expanding, after being initially dispensed as a froth, to no more than about 50% of its volume after being initially dispensed.

11. The method of claim **10** wherein said froth expands to no more than about 20% of its volume after being dispensed.

12. The method of claim 1 wherein the roof includes a substrate, the tiles being positioned on said substrate.

13. The method of claim 1 wherein the distance a given tile's trailing edge extends below a lower tile's leading edge is an overlap, and depositing the top deposit of the lower tile's U-shaped pattern a distance extending from the lower tile's leading edge not greater than the overlap.

14. The method of claim 13 wherein the top and bottom leg deposits of any given pattern may be dispensed anywhere between the marginal edges of any given tile.

15. The method of claim 14 wherein the act of laying the tiles in longitudinally extending tile courses places the tiles in any given course longitudinally offset from the tiles in an immediately adjacent upper and lower course by a distance approximately equal to one-half the distance between the tile's opposing side margin edges; the tiles having a generally flat profile and the U-shaped pattern being dispensed at approximately the midpoint of the distance between opposing side margins of each tile whereby each tile is secured to the roof at positions adjacent the midpoint of its top leading edge and adjacent each corner of its bottom trailing edge.

16. The method of claim 14 wherein the U-shaped pattern is consistently applied about the top leading edge of each tile at a set position between the opposing side margin edges of the tile and the tiles in any given tile course are longitudinally aligned with tiles in courses immediately above and below the given course of tiles such that the adhesive patterns are generally in vertical alignment over the roof area.

17. The method of claim 1 further including the act of dispensing an additional adhesive deposit situated between the roof and the underside of the tiles in the first, lowermost course at a position spaced from the U-shaped sandwich pattern and closer to the trailing edge of the tiles in the first tile course.

18. The method of claim 17 wherein said additional adhesive deposit includes two pads of adhesive for each tile when the tiles are flat tiles.

19. The method of claim 1 wherein said act of dispensing said U-shaped pattern comprises the acts of dispensing the bottom leg deposit prior to positioning a given tile to overlie a lower tile and after positioning the given tile to contact the top leg and bight portions of the lower tile, dispensing a bead of adhesive over the outer surface of the given tile which extends over and away from the leading edge of the given tile to form the top leg and bight portion of the U-shaped pattern for the given tile before the open time of the adhesive has lapsed so that the bight portion of the one-component adhesive is contiguous with the top and bottom leg portions without the presence of any visible knit lines and thereafter pressing said tile to the roof to establish sealing contact between roof, tiles and adhesive.

20. The method of claim 1 wherein prior to pressing or laying the tiles onto the adhesive, the adhesive is dispensed to form the top and bottom leg portions of the U-shaped adhesives as a bead having a length extending from the leading edge towards the trailing edge of about 1½ to 2½; a width extending between opposing side margins of about 4" to about 5" and a height of about 1" to about 1½".

21. The method of claim 20 wherein the bight portion of the dispensed adhesive has a length extending beyond the leading edge of a given tile of about 1" to 2"; a width of about 3½" to about 5"; and a height of about 2" to about 2½" plus the thickness of the tile.

22. The method of claim 21 wherein each U-shaped sandwich pattern has a weight of about 9 to 15 grams.

23. The method of claim 22 wherein each U-shaped adhesive pattern has a weight of about 12 to 14 grams.

24. The method of claim 21 wherein each U-shaped adhesive pattern contacts the roof over an area of about 9 in^2 to about 13 in^2 when the tile is pressed against the roof to position the tile at a set vertical distance from the roof.

25. The method of claim 1 wherein the one-component adhesive is a low density one-component polyurethane adhesive having a density of about 0.8 to about 4.0 lbs/ft when initially dispensed as a froth.

26. The method of claim 25 wherein said low density polyurethane adhesive has a density of about 1.1 to about 2.5 lbs/ft.

27. The method of claim 26 wherein said U-shaped pattern has a weight of about 9 to 15 grams.

28. The method of claim 27 wherein said U-shaped pattern has a weight of about 12–14 grams.

29. The method of claim 28 wherein said U-shaped adhesive is in sealing contact with the roof over an area of from about 9 to about 13 in^2 when the tile has an underside area of about 1 to about 1.5 ft^2.

30. A method for installing roof tiles onto a roof comprising the acts of:

providing a supply of one-component adhesive foam;

providing a supply of roof tiles for attachment to said roof, each of the roof tiles having opposing leading and trailing edge portions interconnected by side edge portions, each of said roof tiles having an undersurface which opposes said roof when installed thereon and an outside surface substantially exposed to the elements;

choosing a set of first roof tiles from said roof tile supply;

dispensing at least a first bead deposit of adhesive foam spaced from but adjacent to the trailing edge portion of each first tile and a second bead deposit in the form of a U-shaped bead pattern of adhesive foam extending around the leading edge portion of each first tile;

placing said first roof tiles onto said roof in a course so that said trailing edge portions of said first roof tiles are positioned closer to an eave of said roof than said first roof tiles leading edge portions and laying said first roof tiles onto said roof so that contact is effected between said first bead deposit, said roof and said underside of the first tiles and between said roof and the adhesive in a bottom leg bead portion of the U-shaped bead pattern and the underside of the first roof tiles and between said adhesive in a bight bead portion of the U-shaped bead pattern and said roof;

choosing a set of second roof tiles from said roof tile supply;

dispensing the U-shaped bead pattern of said adhesive foam from said adhesive foam supply about the leading edge portion of said second tiles;

placing said second roof tiles onto said roof either before or after the U-shaped bead pattern has been formed so that said trailing edge portions of said second roof tiles are positioned over said leading edge portions of said first roof tiles and said leading edge portions of said second roof tiles are positioned over said roof and laying said second roof tiles onto said roof and said first roof tiles after the U-shaped bead pattern has been formed so that contact is effected a) between the roof and the underside of the second tiles and the adhesive in said bottom leg bead portion of said second roof tiles' U-shaped bead pattern and b) between the underside of said second roof tiles, said outside of said first roof tiles and the adhesive in said top leg portion of said first tiles' U-shaped bead pattern and c) between the underside of said second tile, the roof and the adhesive in the bight portion of the first tiles' U-shaped bead pattern;

choosing a set of subsequent roof tiles from said roof tile supply;

dispensing said adhesive foam in the U-shaped bead pattern about the leading edge portion of said subsequent tiles;

placing said subsequent roof tiles onto said roof so that leading edge portions of said subsequent roof tiles are positioned over said roof and trailing edges of said subsequent roof tiles are positioned over a preceding set of roof tiles, and laying said subsequent tiles onto said roof so that contact is effected a) between said roof and said underside of said subsequent tiles and the adhesive in said bottom leg bead portion of said subsequent tiles' U-shaped bead pattern and b) between said underside of said subsequent roof tiles, said outside of said tiles being overlapped and the adhesive in said top leg bead portion of said U-shaped bead pattern of the tiles being overlapped by said subsequent tiles and c) between the underside of said subsequent tiles, said roof and the adhesive in said bight bead portion of the tiles being overlapped by said subsequent tiles; and,

allowing said first, second and subsequent discontinuous bead patterns to cure to bond said first, second and subsequent roof tiles to said roof.

31. The method of claim **30** wherein said U-shaped pattern is formed on any given tile in the second and subsequent courses by dispensing a bead of adhesive comprising said bottom leg of said pattern onto said roof and dispensing a second bead, after said tile has been positioned over a lower tile and onto said roof so that its leading edge is in contact with said bottom leg adhesive, onto said outer surface of said given tile, said second bead being dispensed prior to laying the tile and before the open time of said first bead has lapsed and extending past and beyond said leading edge of said given tile to contact, meld with and fuse into said first bead adjacent said leading edge of said given tile to form a contiguous, enveloping pattern about said leading edge without the presence of any visible knit lines in said U-shaped pattern.

32. The method of claim **30** wherein said U-shaped pattern is formed by continuously applying a bead of adhesive extending from said underside of any given tile, around said leading edge of said given tile and on said outside surface of said given tile.

33. The method of claim **30** wherein any given tile in said second and subsequent courses is initially laid so that its trailing edge overlies a lower tile with a portion of said underside surface in contact with said U-shaped adhesive pattern of said lower tile, said method further including the act thereafter of continuously forming said U-shaped pattern for the given tile by dispensing a bead of adhesive from the underside of said given tile, around the leading edge of said given tile and onto said outside surface of the tile or, from said outside surface of said given tile, about said leading edge of said given tile to the space between the underside of said given tile and said roof.

34. The method of claim **33** further including the act of raising said leading edge of said given tile to dispense said bottom leg of said adhesive U-shaped pattern.

35. A method of installing roof tiles onto a roof, the roof tiles having opposing trailing and leading edge portions intersecting opposing side edge portions, and underside and outside surfaces, the method comprising the acts of:

dispensing a one-component, polyurethane froth in a U-shaped bead pattern extending from the underside of any given tile, around the leading edge portion of the given tile to the outside of the given tile, and

placing the tile in overlapping relationship to a lower tile whereby the adhesive on the underside of the given tile contacts the roof adjacent the leading edge portion of the given tile while the underside of the given tile adjacent the trailing edge portion contacts the adhesive pattern dispensed on the lower tile to establish sealing contact between the underside of the given tile adjacent its trailing edge portion with the outside of the lower tile and between the underside of the given tile adjacent its leading edge portion with the roof.

36. The method of claim **35** further including the act of pressing the given tile towards the roof to set the tile at a desired vertical distance from the roof while causing the U-shaped pattern to expand into a larger area in contact with the roof and tile and thereafter adhering the tile to the roof and the underlying tile when the foam cures.

37. The method of claim **36** wherein the U-shaped pattern is formed on any given tile by dispensing a bead of adhesive comprising the bottom leg of the pattern onto the roof and dispensing a second bead of adhesive onto the given tile's outer surface, after the given tile has been placed over a lower tile and onto the roof so that its leading edge is in contact with the bottom leg adhesive but before the open time of the adhesive has lapsed and prior to pressing the tile in place, said second bead being dispensed past and beyond the leading edge of the given tile to contact, meld with and fuse into said first bead adjacent said leading edge of said given tile whereby a contiguous U-shaped pattern without visible knit lines and which pattern an be flowed into a longer contact area during the tile pressing act.

38. The method of claim **36** wherein said U-shaped pattern is formed by continuously applying a single bead of adhesive extending from the underside of any given tile, around and enveloping the leading edge of the given tile and onto the outside surface of the given tile.

39. The method of claim **38** wherein any given tile is initially positioned so that its trailing edge overlies a lower tile with a portion of the given tile's underside surface in contact with the U-shaped adhesive pattern of the lower tile, the method further including the act thereafter of forming the U-shaped pattern for the given tile by dispensing continuously a bead of adhesive from the underside of the given tile, around the leading edge of the given tile and onto the outside surface of the tile or, from the outside surface of the given tile, about the leading edge of the given tile to the space between the underside of the given tile and the roof.

40. The method of claim **39** further including the act of raising the leading edge of the given tile to dispense the bottom leg of the adhesive U-shaped pattern.

* * * * *