(12) STANDARD PATENT (11) Application No. **AU 2008202416 B1**
(19) AUSTRALIAN PATENT OFFICE

(54) Title
Roof Cover System

(51) International Patent Classification(s)
E04G 21/28 (2006.01) ***E04D 5/06*** (2006.01)

(21) Application No: **2008202416** (22) Date of Filing: **2008.06.02**

(43) Publication Date: **2008.09.18**
(43) Publication Journal Date: **2008.09.18**
(44) Accepted Journal Date: **2008.09.18**

(71) Applicant(s)
Case File Management Systems Pty Ltd

(72) Inventor(s)
Farrow, Adam;Burge, Rodney;Lennox, Matthew

(74) Agent / Attorney
Wallington-Dummer, Suite 904 37 Bligh Street, Sydney, NSW, 2000

(56) Related Art
US2005/0217202

2008202416 04 Aug 2008

ABSTRACT

A roof cover of a building under construction; said cover comprising a heat shrinkable film stretched over the roof framing of said building under construction; said film brought into conformity with said roof framing through application of heat.

2008202416 02 Jun 2008

P/00/009

Regulation 3.2

AUSTRALIA

Patents Act 1990

COMPLETE SPECIFICATION

Invention Title:

ROOF COVER SYSTEM

The invention is described in the following statement, including the best means of performing the invention known to us:

Our Ref: 082024

2008202416 02 Jun 2008

ROOF COVER SYSTEM

The present invention relates to protective covering of roofs and, more particularly, to the covering of damaged or under construction roofs.

BACKGROUND

Roofs are susceptible to damage from high winds, rain or hail. Tiled roofs for example may have a considerable area of tiles either damaged from hail impact, or dislodged completely as the result of high intensity storms. Shingled roofs are liable to be similarly damaged, and even metal sheeted roofs may suffer partial or total removal of one or more sheets. Damage to roofs may also be caused by the impact of falling trees or large branches.

Storm or impact damage cannot usually be immediately repaired so that to prevent further or potential damage to the interior of the building, temporary covering must be provided. Typically canvas (or similar material) tarpaulins are placed over the damaged part of the roof and secured to the structure by ropes.

One disadvantage of this method of temporary covering is the difficulty of adequately securing a tarpaulin to the roof so that they remain very vulnerable to dislodgement should high winds prevail or recur and often require continuing attention and adjustment. Moreover, they are

2008202416 02 Jun 2008

heavy and awkward to position, posing occupational health and safety issues. A further disadvantage is that they are expensive to acquire and bulky to store, and if the many roofs are damaged in one storm event, the number of tarpaulins available may be inadequate.

Buildings under construction, particularly timber framed, brick clad dwellings, are frequently constructed in a sequence where the timber frame, including that of the roof, is completed a considerable time before the roof cladding can be added. A disadvantage of this construction technique is that during this period the timber of the structure, which may even include timber or particle board flooring, is liable to deterioration from water and sun. A further disadvantage of this sequence of construction is that, if rain intervenes at the time further internal work is scheduled, the lack of roof covering may cause considerable delay and financial loss.

It is an object of the present invention to address or at least ameliorate some of the above disadvantages.

Notes

1. The term "comprising" (and grammatical variations thereof) is used in this specification in the inclusive sense of "having" or "including", and not in the exclusive sense of "consisting only of".
2. The above discussion of the prior art in the Background of the invention, is not an admission that any

2008202416 04 Aug 2008

information discussed therein is citable prior art or part of the common general knowledge of persons skilled in the art in any country.

BRIEF DESCRIPTION OF INVENTION

Accordingly, in a first broad form of the invention, there is provided a roof cover of a building under construction; said cover comprising a heat shrinkable film stretched over the roof framing of said building under construction; said film brought into conformity with said roof framing through application of heat.

Preferably, said heat shrinkable film provides a temporary or permanent waterproofing of said building under construction.

Preferably, said heat shrinkable film is provided with a heat reflecting surface.

Preferably, said heat shrinkable film forms a permanent layer; said layer excluding inclement weather from said building under construction.

COMS ID No: ARCS-200802 Received by IP Australia: Time (H:m) 15:08 Date (Y-M-d) 2008-08-04

2008202416 04 Aug 2008

Preferably, said heat shrinkable film is retained by mechanical means at edges of a said damaged or uncompleted roof framing.

Preferably, said mechanical means include a temporary batten affixed under eaves of said roof framing.

Preferably, said heat shrinkable film has a thickness of between 0.6 and 0.7mm.

Preferably, said heat shrinkable film is a film of low-density polyethylene.

Preferably, said heat shrinkable film includes shrinking resins, UV inhibitors, anti-brittling compounds and strengtheners.

Preferably, said heat shrinkable film is retained as a permanent heat reflecting layer under subsequently applied permanent roof cladding.

2008202416 04 Aug 2008

BRIEF DESCRIPTION OF DRAWINGS

Embodiments of the present invention will now be described with reference to the accompanying drawings wherein:

Figure 1 is a perspective view of a portion of a building of which the roof has sustained damage,

COMS ID No: ARCS-200802 Received by IP Australia: Time (H:m) 15:08 Date (Y-M-d) 2008-08-04

2008202416 02 Jun 2008

Figure 2 is a side sectioned view of a portion of a building and existing roof structure to which has been applied a roof cover system according to the invention,

Figure 3 is a side sectioned view of a portion of a partly completed building showing the application of a roof cover system of the invention to unclad roof framing,

Figure 4 is a further side sectioned view of the building of Figure 3 showing the roof cover system of the invention functioning as a permanent sarking layer,

DETAILED DESCRIPTION OF PREFERRED EMBODIMENTS

The roof cover system of the present invention provides for a system and method for covering a damaged or uncompleted roof of a building. The system uses a heat shrinkable film, preferably a low-density polyethylene containing shrinking resins, UV inhibitors, anti brittling compounds and strengtheners for tear resistance. The film is preferably between 0.6 and 0.7mm in thickness and is provided in rolls of various widths and lengths. In at least one preferred form of the film, it is provided with a heat reflective surface.

First Preferred Embodiment

With reference now to Figure 1, typical damage to a tiled roof 10 of a building 12 may include the loss of a number of tiles 12 due to a high wind shear event, leaving the building 14 open to the ingress of water. Water ingress

2008202416 02 Jun 2008

may also occur if tiles are cracked for example from heavy hail impact or falling trees or branches. Emergency temporary repair is provided by the roof cover system of the invention by applying the above described film over that portion of the roof which has sustained damage.

If required, sharp edges protruding from the roof surface may first be covered with suitable wadding and adhesive tape to prevent possible tearing of the film during application.

The extent of roof to be covered is measured and the most suitable available width roll of the heat shrinkable film selected. Film is cut to one or more lengths sufficient to extend from one edge of the roof to an opposite edge. With reference to Figure 2, a trailing edge of a length of film is mechanically attached at the first edge 16 of the roof 10. In one preferred method as shown in Figure 2, the trailing edge 15 of the film 18 is wrapped once around a length of batten 18, preferably as long as the width of the film, and the batten 20 mechanically fixed to the underside 22 of the eaves 24 at the first edge of the roof 10.

The leading edge is now passed over the roof to the opposite edge (not shown) of the roof and the leading edge secured to the opposite side eaves in similar manner to that already described. If the outer side edge of the length of film adjoins an edge of the roof, this may be

2008202416 02 Jun 2008

similarly secured under the eaves along that side of the roof. Alternatively, the leading edge may be secured to the barge or fascia boards.

Heat is now applied to the film at the underside of the eaves 24 with a heat gun (not shown) to cause the film 18 to shrink securely around the batten and the undersides of the eaves. The heat gun, now attached to an extension arm (not shown), is then used to apply heat to the entire length of film 18 stretched over the roof surface, causing it to tightly conform to the surface and covering missing or cracked tiles 12.

If the extent of the damage requires, successive lengths of film can be applied side by side with an overlap of preferably 300mm. Heat is applied along these overlaps to seal the edges of the adjoining lengths together.

Valley areas and other discontinuities in the roof surface can be accommodated by cutting film to suit the are involve and heat sealing to adjoining film length edges. Vertical roof penetrations, such as chimney stacks ventilators and the like, are sealed by preferably a 300mm rise of film. Edges of riser sections of film can be taped or cable-tied to the penetration.

By the above means, a damaged roof can be rapidly and securely covered to prevent water ingress and damage to the inside of the building. Unlike tarpaulins which are difficult to secure an remain liable to dislodgement in

2008202416 02 Jun 2008

high winds, the heat shrinkable film by conforming closely to the roof surface, provides a secure seal over the damage until permanent repairs can be made.

Second Preferred Embodiment

In a second preferred embodiment of the invention, a heat shrinkable film may be applied to the roof framing of an uncompleted building. In this embodiment as shown in Figure 3, the heat shrinkable film 18 is applied after the roof framing is complete but preferably prior to the attachment of facia boards.

In this embodiment also, lengths of film are prepared from suitable width rolls sufficient to stretch from one side of the roof to an opposite side. In this case the trailing and leading edges of the length of film are preferably attached by means of battens 20 fixed to the underside of the outer ends 26 of rafters 28, that is between the outer ends of the rafters 28 and the wall frame 30.

The heat shrinkable film 18 in this embodiment, is provided with a heat reflecting upper surface 32 so that the film 18 forms a permanent sarking layer beneath the roofing cladding, either tiles 34, as shown in Figure 4, or metal sheeting. Thus in this embodiment the heat shrinkable film of the invention act both to protect the timberwork of a building under construction and provides a replacement for conventional reflective sarking.

COMS ID No: ARCS-192763 Received by IP Australia: Time (H:m) 13:40 Date (Y-M-d) 2008-06-02

2008202416 02 Jun 2008

The weatherproof nature of the heat shrinkable material applied in this way provides for internal work on the building to continue in the event of inclement weather, thus increasing productivity and economy of construction.

The above describes only some embodiments of the present invention and modifications, obvious to those skilled in the art, can be made thereto without departing from the scope of the present invention.

COMS ID No: ARCS-192763 Received by IP Australia: Time (H:m) 13:40 Date (Y-M-d) 2008-06-02

2008202416 04 Aug 2008

CLAIMS

1. A roof cover of a building under construction; said cover comprising a heat shrinkable film stretched over the roof framing of said building under construction; said film brought into conformity with said roof framing through application of heat.
2. The roof cover of claim 1 wherein said heat shrinkable film provides a temporary or permanent waterproofing of said building under construction.
3. The roof cover of claim 1 wherein said heat shrinkable film is provided with a heat reflecting surface.
4. The roof cover of claim 3 wherein said heat shrinkable film forms a permanent layer; said layer excluding inclement weather from said building under construction.
5. The roof cover of any one of claims 2 to 4 wherein said heat shrinkable film is retained by mechanical means at edges of a said damaged or uncompleted roof framing.
6. The roof cover of claim 6 wherein said mechanical means include a temporary batten affixed under eaves of said roof framing.
7. The roof cover of any one of claims 1 to 6 wherein said heat shrinkable film has a thickness of between 0.6 and 0.7mm.

COMS ID No: ARCS-200802 Received by IP Australia: Time (H:m) 15:08 Date (Y-M-D) 2008-08-04

2008202416 04 Aug 2008

8. The roof cover of any one of claims 1 to 8 wherein said heat shrinkable film is a film of low-density polyethylene.

9. The roof cover ~~system~~ of claim 8 wherein said heat shrinkable film includes shrinking resins, UV inhibitors, anti-brittling compounds and strengtheners.

10. The roof cover of any one of claims 1 to 9 wherein said heat shrinkable film is retained as a permanent heat reflecting layer under subsequently applied permanent roof cladding.

2008202416 02 Jun 2008

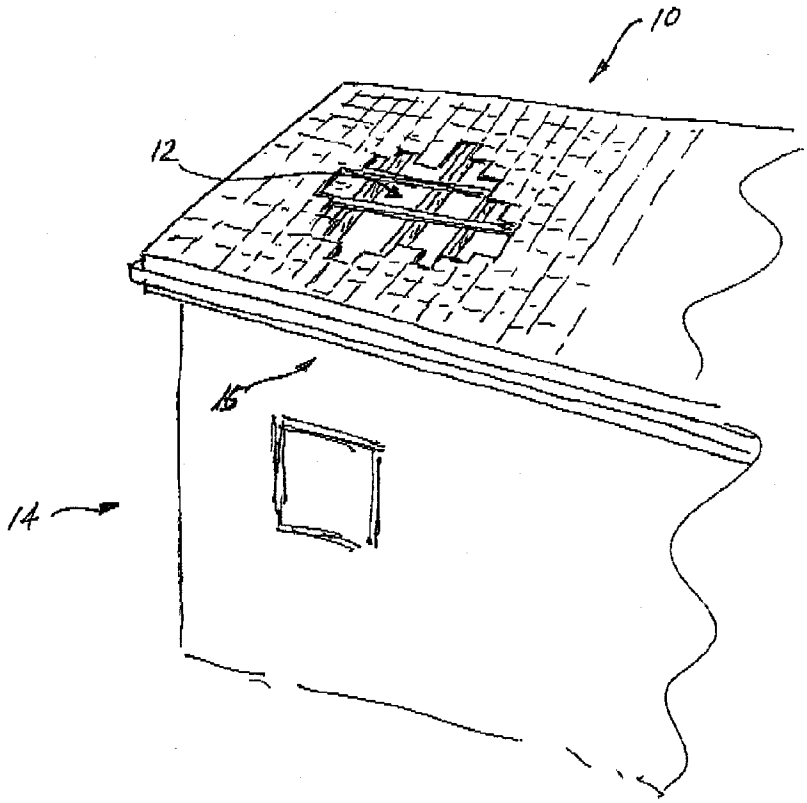

Fig. 1

2008202416 02 Jun 2008

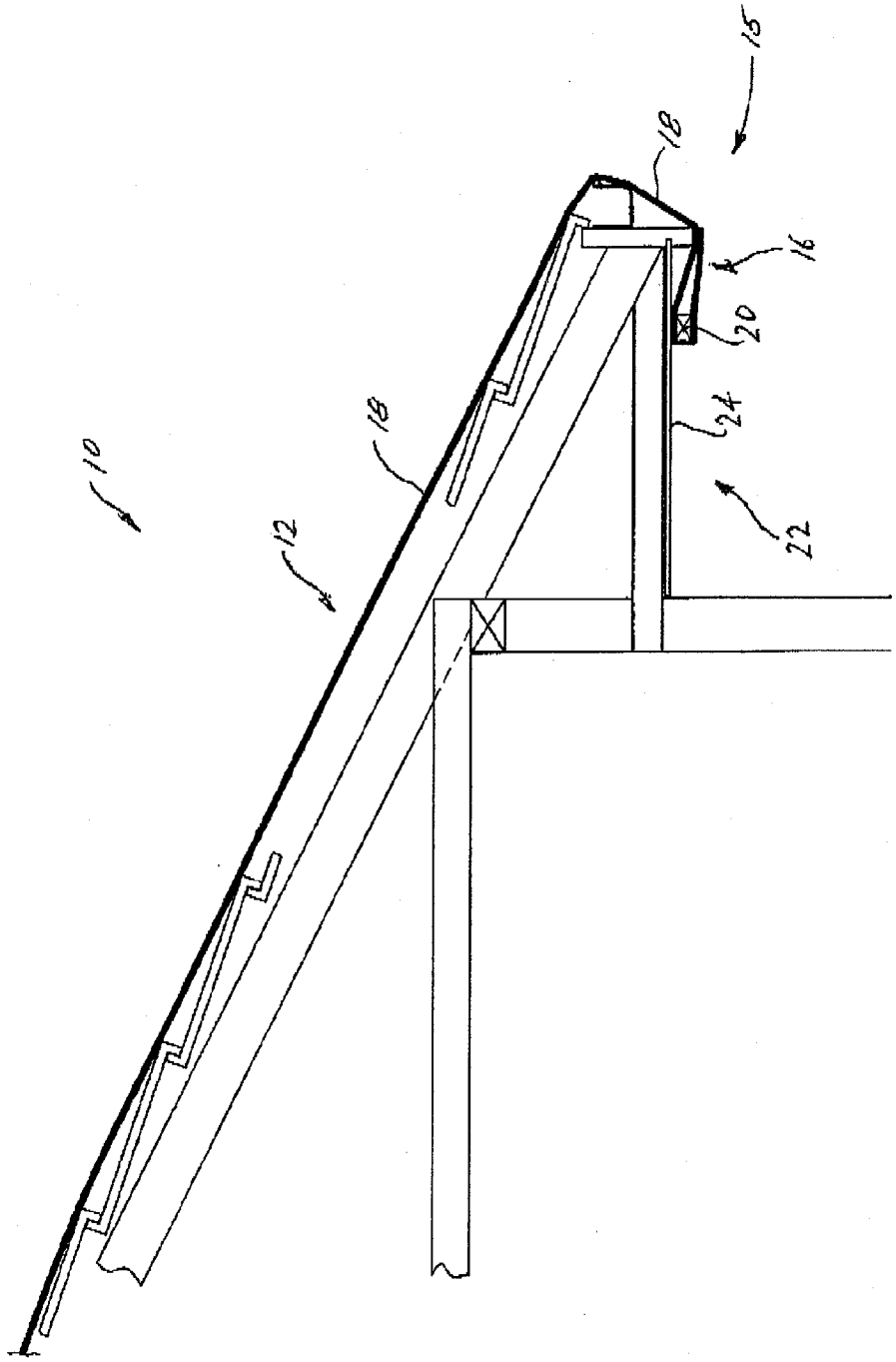

Fig. 2

2008202416 02 Jun 2008

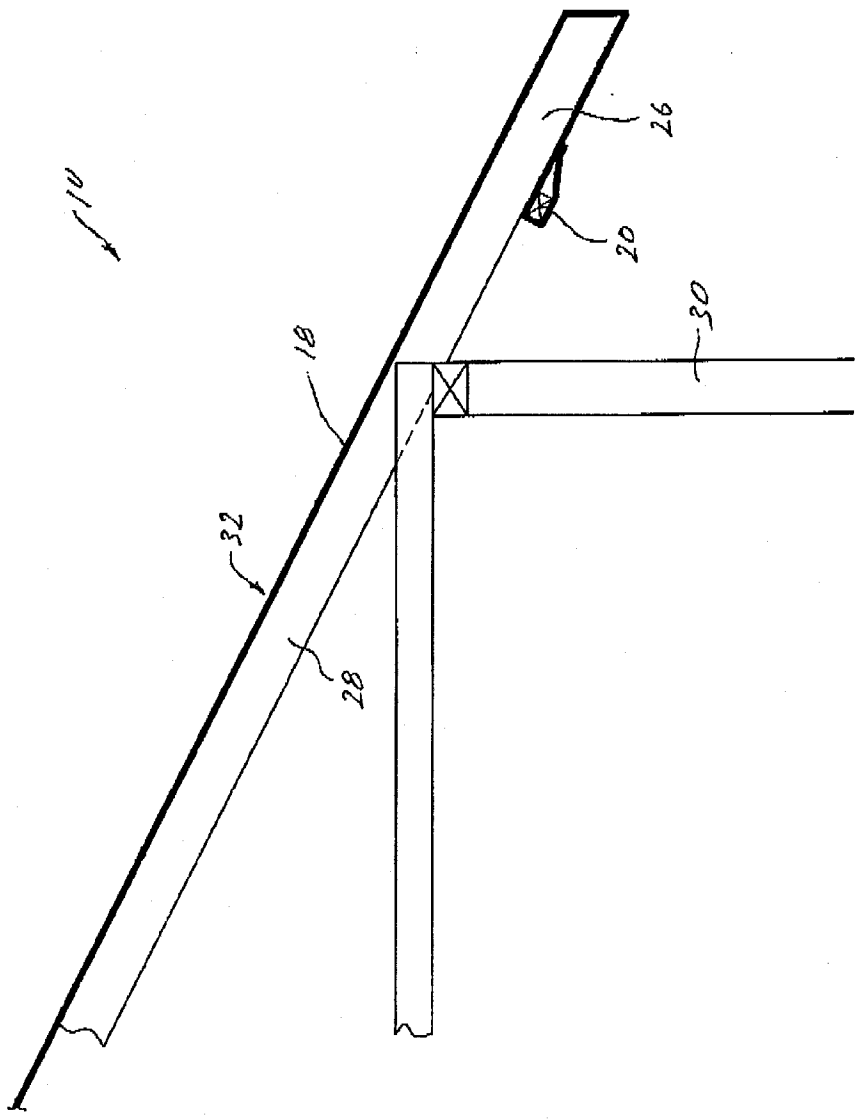

Fig. 3

2008202416 02 Jun 2008

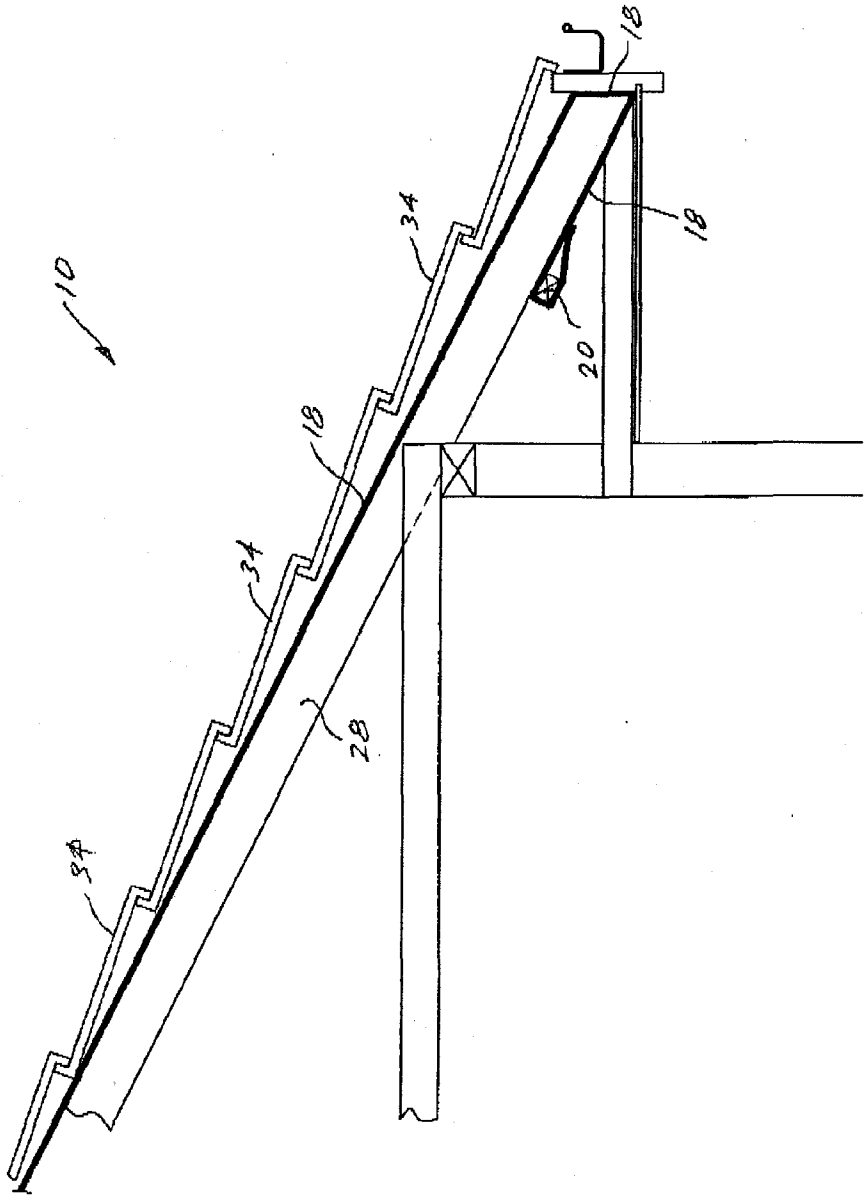

Fig. 4

AU9466002

(12) PATENT ABSTRACT (11) Document No. AU-A-66002/94
(19) AUSTRALIAN PATENT OFFICE

(Australian Petty Patent Application)

(54) Title
LAMINATE MATERIAL

International Patent Classification(s)
(51)[5] **E04D 005/10** **B32B 015/14** **B32B 027/12** **E04D 003/35**
E04D 011/00

(21) Application No. : **66002/94** (22) Application Date : **27.06.94**

(43) Publication Date : **06.10.94**

(62) Related to Division(s) : **44376/93**

(71) Applicant(s)
CSR LIMITED

(72) Inventor(s)
MICHAEL FREDERICK SMITH

(74) Attorney or Agent
SHELSTON WATERS , 55 Clarence Street, SYDNEY NSW 2000

(57) Claim

1. An insulating laminate material for use as a sarking membrane and roofing safety mesh, said laminate material comprising:

a reinforced backing sheet adhesively bonded on one side to an outer layer of foil,

said reinforced backing sheet having a water resistant coating on its outer side remote from said layer of foil.

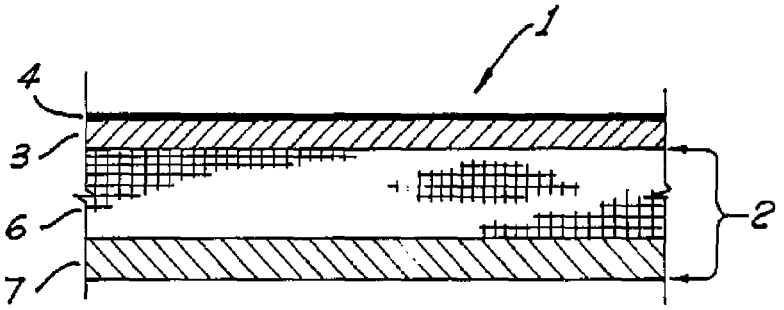

FIG. 1

ENGLISH LANGUAGE TRANSLATION OF EP 0410275

Damp-proof sheet for the sealing of buildings.

Abstract

A damp-proof sheet for the sealing of buildings having a barrier layer for water and water vapour is described. The damp-proof sheet contains at least one biaxially stretch-oriented and thermoset sheet of thermoplastic material which is metallised on at least one side. In addition, a method of preventing the ingress of moisture into heat insulating layers of buildings is described. In this method, a biaxially stretch-oriented, thermoset sheet of thermoplastic material which is metallised on at least one side is arranged between the masonry or the outer facing of the building and the heat insulating material to be protected.

(19) Europäisches Patentamt
European Patent Office
Office européen des brevets

(11) Veröffentlichungsnummer: **0 410 275 A1**

(12) **EUROPÄISCHE PATENTANMELDUNG**

(21) Anmeldenummer: **90113709.1**

(51) Int. Cl.5: **E04B 1/66**

(22) Anmeldetag: **18.07.90**

(30) Priorität: **26.07.89 DE 8909045 U**

(43) Veröffentlichungstag der Anmeldung:
30.01.91 Patentblatt 91/05

(84) Benannte Vertragsstaaten:
BE DE DK ES FR GB IT LU NL SE

(71) Anmelder: **HOECHST AKTIENGESELLSCHAFT**
Postfach 80 03 20
D-6230 Frankfurt am Main 80(DE)

(72) Erfinder: **Ernst, Gottlieb**
Auf den Erlen 1b
D-6200 Wiesbaden(DE)
Erfinder: **Hessberger, Harald, Dr.**
In den Dörrwiesen 6
D-6270 Idstein(DE)

(54) **Dichtungsbahn für die Bauwerksabdichtung.**

(57) Es wird eine Dichtungsbahn für die Bauwerksabdichtung mit einer Sperrschicht für Wasser und Wasserdampf beschrieben. Die Dichtungsbahn enthält wenigstens eine biaxial streckorientierte und hitzefixierte Folie aus thermoplastischem Kunststoff, die wenigstens einseitig metallisiert ist.
Außerdem wird ein Verfahren zur Verhinderung des Eindringens von Feuchtigkeit in Wärmedämmschichten von Bauwerken beschrieben. Zwischen dem Mauerwerk oder der äußeren Bauwerksverkleidung und dem zu schützenden Wärmedämmaterial wird dabei eine biaxial streckorientierte, hitzefixierte und wenigstens einseitig metallisierte Folie aus thermoplastischem Kunststoff angeordnet.

EP 0 410 275 A1

DICHTUNGSBAHN FÜR DIE BAUWERKSABDICHTUNG

Die vorliegende Erfindung betrifft eine Dichtungsbahn für die Bauwerksabdichtung mit einer Sperrschicht für Wasser und Wasserdampf.

Lang andauernde Einwirkung von Wasser und Wasserdampf kann bekanntlich die Qualität und Lebensdauer einer Wärmeisolierung an Dächern oder Wänden von Bauwerken, die üblicherweise aus geschäumten Kunststoffen oder Steinwolle besteht, beträchtlich mindern. Deshalb werden zum Schutz solcher Wärmedämmschichten in der Praxis zusätzliche Dichtungsbahnen vorgesehen. Für viele Anwendungen lassen allerdings die üblichen Dichtungsbahnen noch zu wünschen übrig.

Aus der EP-A-0 045 893 ist eine bituminöse Dichtungsbahn für die Dachabdeckung bekannt, die eine Sperrschicht aus Kunststoff-Metall-Verbundfolie enthält. Aluminium ist jedoch ein teurer und energieintensiver Rohstoff, und es besteht das Bestreben, hier wirksame Einsparungen vorzusehen, ohne daß aber die Sperrwirkung der Dichtungsbahn nachläßt.

Aufgabe der Erfindung war es daher, eine Dichtungsbahn für die Bauwerksabdichtung, insbesondere zum Schutz von Wärmedämmschichten, zu schaffen, die eine wirksame Sperre gegenüber Wasser und Wasserdampf darstellt und die gleichzeitig in großem Umfang preisgünstig und umweltfreundlich herzustellen ist.

Gelöst wird diese Aufgabe durch eine Dichtungsbahn der eingangs genannten Gattung, deren Kennzeichenmerkmal darin besteht, daß die Dichtungsbahn wenigstens eine biaxial streckorientierte und hitzefixierte Folie aus thermoplastischem Kunststoff enthält, die wenigstens einseitig metallisiert ist.

Als thermoplastischer Kunststoff sind prinzipiell alle Kunststoffe geeignet, die sich zu biaxial orientierten Folien verarbeiten lassen. Beispiele hierfür sind Polyolefine, Polystyrol, Polyamide, Polyvinylchlorid oder Polyester. Bevorzugt im Rahmen der Erfindung sind Polyolefine, insbesondere Polypropylen, und Polyester, insbesondere Polyethylenterephthalat.

Als eine Metallisierung soll im Rahmen der Erfindung eine ultradünne Metallbelegung einer Oberfläche verstanden werden, die üblicherweise durch Metallaufdampfung im Vakuum erzeugt wird. Die Dicke der Metallisierung liegt im Bereich von 20 bis 200 nm, als Metalle können Zink, Aluminium, Eisen, Chrom, Nickel u. a. verwendet werden, wobei Aluminium bevorzugt ist.

In einer bevorzugten Ausführungsform der erfindungsgemäßen Dichtungsbahn ist die Metallisierung durch eine zusätzlich auf der freien Oberfläche der Metallisierung angeordnete Kunststoffschicht vor mechanischer Beschädigung geschützt. Diese Schutzschicht kann aus Polyethylen, Polypropylen oder aus Polyester bestehen. Sie kann durch Aufkaschieren (Aufkleben) oder durch Aufextrudieren aufgebracht werden.

Wenn die erfindungsgemäße Dichtungsbahn für die Dachabdeckung Verwendung finden soll, kann sie ein- oder beidseitig mit einer Bitumenschicht kombiniert werden.

Für manche Anwendungszwecke ist es wünschenswert, einen Flammschutz für die erfindungsgemäße Dichtungsbahn vorzusehen. Dafür kann in einer besonderen Ausgestaltung der Erfindung der Rohstoff für die biaxial streckorientierte und hitzefixierte Folie zusätzlich flammhemmende Mittel enthalten. Solche Mittel sind üblicherweise Verbindungen, die Halogene, Phosphor oder Aluminium in jeweils wirksamen Konzentrationen enthalten.

Darüber hinaus können dem Kunststoff Additive wie z. B. UV-Stabilisatoren zugefügt werden, falls die Dichtungsbahn bei ihrem bestimmungsgemäßen Einsatz der direkten Witterung und dem Sonnenlicht ausgesetzt werden soll.

Die Dichtungsbahn wird gemäß der Erfindung so zwischen dem Mauerwerk oder der äußeren Bauwerksverkleidung und dem zu schützenden Wärmedämmaterial angeordnet, daß ein wirksamer Schutz gegen das Eindringen von Feuchtigkeit in das Wärmedämmaterial gewährleistet ist. Hierzu ist es vorteilhaft, die erfindungsgemäße Dichtungsbahn in Überlappungsbereichen mit geeigneten Klebern, die insbesondere auch witterungsbeständig sein sollen, zu verkleben. Die Verwendung der erfindungsgemäßen biaxial streckorientierten, hitzefixierten und metallisierten Dichtungsbahn zur Verhinderung des Eindringens von Feuchtigkeit in Wärmedämmschichten bei Bauwerken ist deshalb besonders vor teilhaft, weil die erfindungsgemäße Dichtungsbahn wegen der Streckorientierung eine besonders gute Reißfestigkeit besitzt und weil sie infolge der Hitzefixierung auch eine ausreichend hohe Dimensionsstabilität unter der Einwirkung üblicher witterungsbedingter Temperaturunterschiede über einen Zeitraum von mehreren Jahren gewährleistet.

Die Erfindung wird nachfolgend beispielhaft durch die Zeichnung näher erläutert. Die einzige Figur zeigt in seitlicher Ansicht einen senkrechten Schnitt durch eine erfindungsgemäße Dichtungsbahn. Mit Bezugsziffern sind insbesondere die biaxial streckorientierte und hitzefixierte Folie aus Kunststoff 1, die Metallisierung 2 und die Deckschicht 3 hervorgehoben.

Structural Wrap Exhibit 1012, Page 24
Structural Wrap v Stormseal, IPR2024-00084

Ansprüche

1. Dichtungsbahn für die Bauwerksabdichtung mit einer Sperrschicht für Wasser und Wasserdampf, dadurch gekennzeichnet, daß die Dichtungsbahn wenigstens eine biaxial streckorientierte und hitzefixierte Folie aus thermoplastischem Kunststoff enthält, die wenigstens einseitig metallisiert ist.

2. Dichtungsbahn nach Anspruch 1, dadurch gekennzeichnet, daß der thermoplastische Kunststoff Polypropylen oder Polyethylenterephthalat ist.

3. Dichtungsbahn nach Anspruch 1 oder 2, dadurch gekennzeichnet, daß die Metallisierung eine durch Vakuumaufdampfung erzeugte Aluminiumschicht ist.

4. Dichtungsbahn nach Anspruch 1, dadurch gekennzeichnet, daß auf der freien Oberfläche der Metallisierung eine zusätzliche Kunststoffschicht angeordnet ist.

5. Dichtungsbahn nach Anspruch 4, dadurch gekennzeichnet, daß die zusätzliche Kunststoffschicht aus Polypropylen, Polyethylen oder Polyethylenterephthalat besteht.

6. Dichtungsbahn nach Anspruch 1 bis 5, dadurch gekennzeichnet, daß sie wenigstens einseitig mit einer Bitumenschicht überzogen ist.

7. Dichtungsbahn nach Anspruch 1 bis 6, dadurch gekennzeichnet, daß sie zusätzlich flammhemmende Mittel enthält.

8. Dichtungsbahn nach Anspruch 1 bis 6, dadurch gekennzeichnet, daß sie zusätzlich UV-Stabilisatoren enthält.

9. Verfahren zur Verhinderung des Eindringens von Feuchtigkeit in Wärmedämmschichten von Bauwerken, bei dem zwischen dem Mauerwerk oder der äußeren Bauwerksverkleidung und dem zu schützenden Wärmedämmaterial eine biaxial streckorientierte, hitzefixierte und wenigstens einseitig metallisierte Folie aus thermoplastischem Kunststoff angeordnet wird.

10. Verwendung einer biaxial streckorientierten, hitzefixierten und wenigstens einseitig metallisierten Folie aus thermoplastischem Kunststoff zur Verhinderung des Eindringens von Feuchtigkeit in Wärmedämmschichten bei Bauwerken.

Structural Wrap Exhibit 1012, Page 25
Structural Wrap v Stormseal, IPR2024-00084

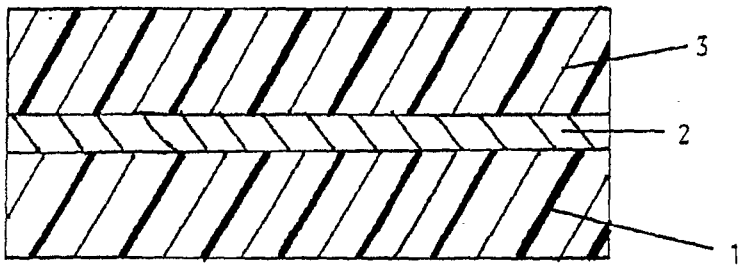
3
2
1

Europäisches Patentamt

EUROPÄISCHER RECHERCHENBERICHT

Nummer der Anmeldung

EP 90 11 3709

EINSCHLÄGIGE DOKUMENTE

Kategorie	Kennzeichnung des Dokuments mit Angabe, soweit erforderlich, der maßgeblichen Teile	Betrifft Anspruch	KLASSIFIKATION DER ANMELDUNG (Int. Cl.5)
X	DE-A-3 708 354 (HOECHST AG) * Spalte 1, Zeile 64 - Spalte 4, Zeile 62; Spalte 5, Zeile 56 - Spalte 6, Zeile 31 * – – –	1-3	E 04 B 1/66
Y		4-6,9,10	
Y,D	EP-A-0 045 893 (WOLFF WALSRODE AG) * Insgesamt * – – –	4-6,9,10	
X	US-A-4 622 950 (G. GREENBAUM) * Spalte 1, Zeilen 36-68; Spalte 6, Zeile 37 - Spalte 7, Zeile 9; Anspruch 19; Figuren 11,12 * – – –	1,2	
A		3-5	
A	EP-A-0 129 809 (BEIERSDORF AG) * Seite 2, Zeilen 7-10; Seite 3, Zeilen 5-7; Ansprüche 1,3 * – – –	1,2	
A	JAPANESE PATENT GAZETTE, week 8322, 13. Juli 1983, Sektion Ch, Klasse A, Seite 1, Zusammenfassung Nr. 83-52522K/22, Derwent Publications Ltd, London, GB; & JP-A-58 067 411 (TEIJIN K.K.) 22-04-1983 * Das ganze Dokument * – – –	7,8	
A	DE-A-3 513 526 (HOECHST AG) – – – – –		

RECHERCHIERTE SACHGEBIETE (Int. Cl.5)
E 04 B

Der vorliegende Recherchenbericht wurde für alle Patentansprüche erstellt

Recherchenort	Abschlußdatum der Recherche	Prüfer
Den Haag	24 Oktober 90	KAPPOS A.

KATEGORIE DER GENANNTEN DOKUMENTE

- X: von besonderer Bedeutung allein betrachtet
- Y: von besonderer Bedeutung in Verbindung mit einer anderen Veröffentlichung derselben Kategorie
- A: technologischer Hintergrund
- O: nichtschriftliche Offenbarung
- P: Zwischenliteratur
- T: der Erfindung zugrunde liegende Theorien oder Grundsätze
- E: älteres Patentdokument, das jedoch erst am oder nach dem Anmeldedatum veröffentlicht worden ist
- D: in der Anmeldung angeführtes Dokument
- L: aus anderen Gründen angeführtes Dokument
- &: Mitglied der gleichen Patentfamilie, übereinstimmendes Dokument

(12) UK Patent Application (19) GB (11) 2 376 206 (13) A

(43) Date of A Publication 11.12.2002

(21) Application No 0207775.8

(22) Date of Filing 04.04.2002

(30) Priority Data
(31) 0109156 (32) 12.04.2001 (33) GB

(71) Applicant(s)
British Sisalkraft Limited
(Incorporated in the United Kingdom)
Commissioners Road, Strood,
ROCHESTER, Kent, ME2 4ED,
United Kingdom

(72) Inventor(s)
Stephen Waight

(74) Agent and/or Address for Service
Stevens Hewlett & Perkins
1 St Augustine's Place, BRISTOL,
BS1 4UD, United Kingdom

(51) INT CL[7]
B32B 3/28 // B32B 7/06 15/08 , E04B 1/64

(52) UK CL (Edition T)
B5N N0328 N0706 N1508 N1520 N195 N196 N199 N20Y N207 N21X N21Y N222 N223 N224 N255 N256 N257 N258 N259 N26X N26Y N389 N46Y N477 N480 N484 N515 N517 N524 N527 N534 N537 N552 N564 N573 N58X N58Y N589 N59X N60X N648 N657 N658 N66Y N661 N670 N672 N681 N682 N684 N695 N70X N71Y N712 N725 N76X
E1D DCF D106 D1071 D1072 D2044 D401 D402 D427
U1S S1405 S1707 S3011

(56) Documents Cited
GB 2370049 A **GB 2367839 A**

(58) Field of Search
UK CL (Edition T) **B5N**
INT CL[7] **B32B** 3/28 15/08, **E04B** 1/64
Other: **Online: EPODOC, WPI, JAPIO, RM25**

(54) Abstract Title
Cavity wall lining sheet

(57) A cavity wall lining sheet 10 comprises a vacuum formed bubble sheet 11,12 laminated to the first face of metal foil 15. The bubble sheet may be constructed from polyethylene and the foil may comprise aluminium, with a polyethylene or lacquer corrosion resistant coating. Optionally the second face of the foil may be heat bonded to a further polyethylene sheet (150) which is tinted or otherwise treated to reduce glare from the metal foil during installation of the liner sheet. In use, vertical overlaps between adjacent lining sheets are sealed with tape, whereas horizontal overlaps are left unsealed. The liner provides cavity insulation with improved breathability due to air circulation around bubble cells 13.

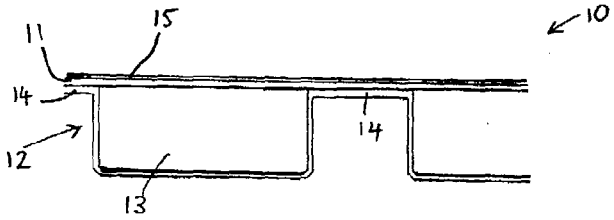

FIGURE 2

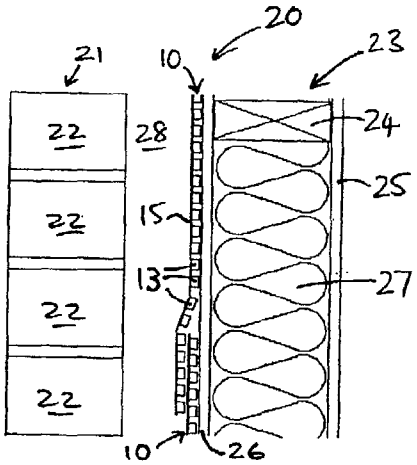

FIGURE 3

GB 2 376 206 A

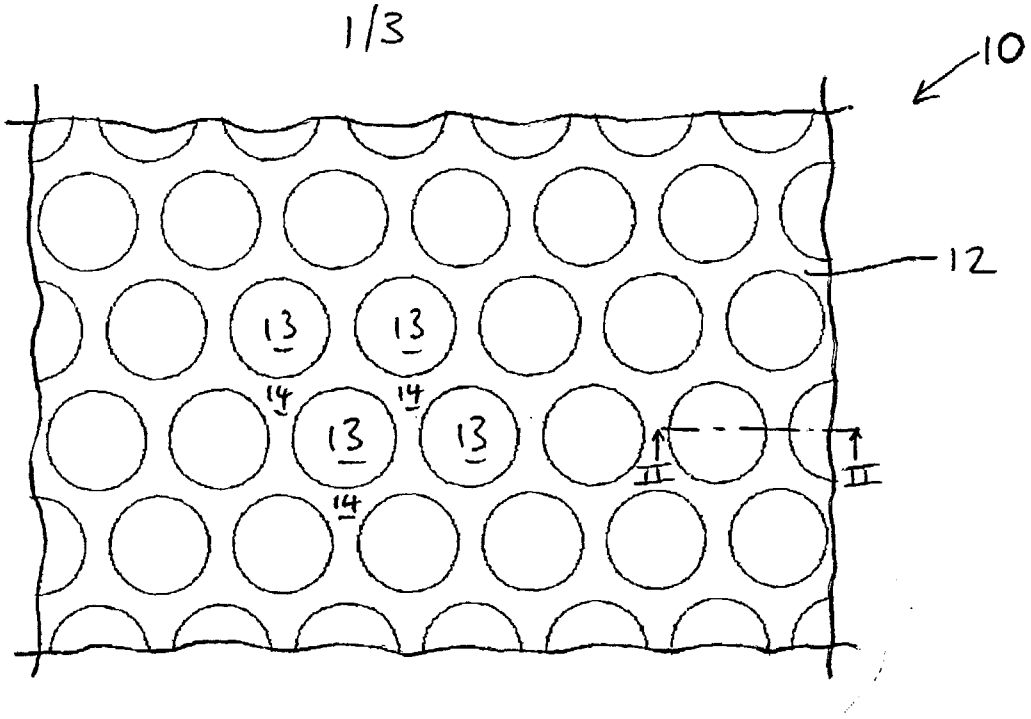

FIGURE 1

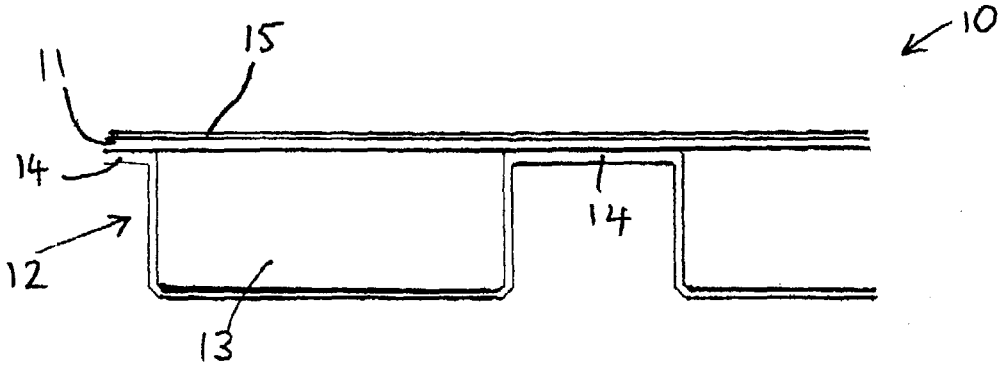

FIGURE 2

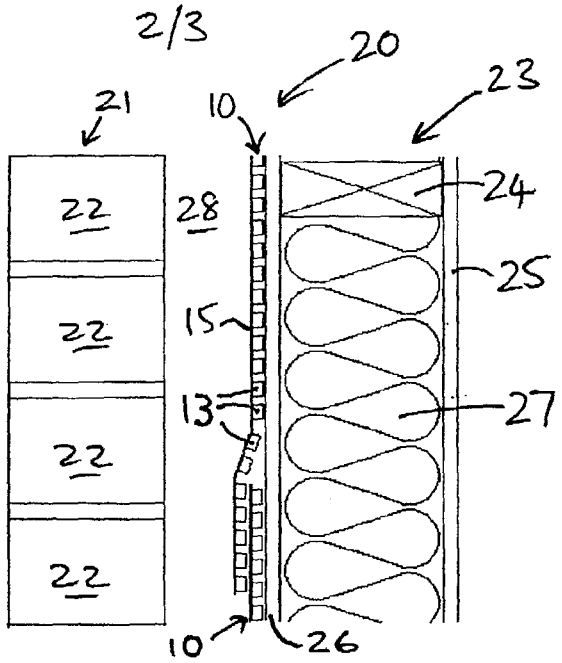

FIGURE 3

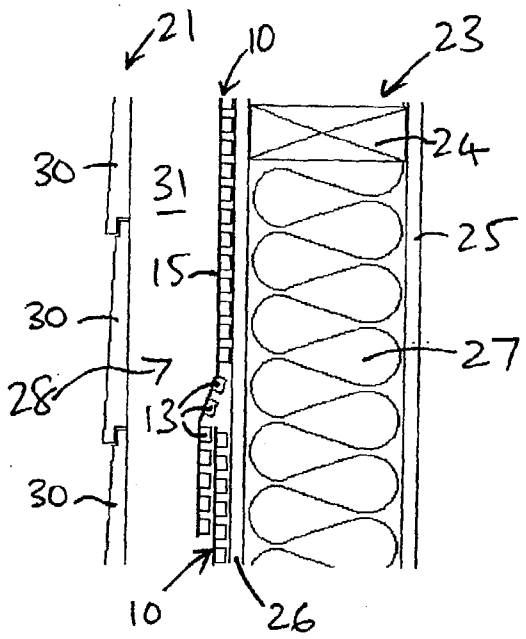

FIGURE 4

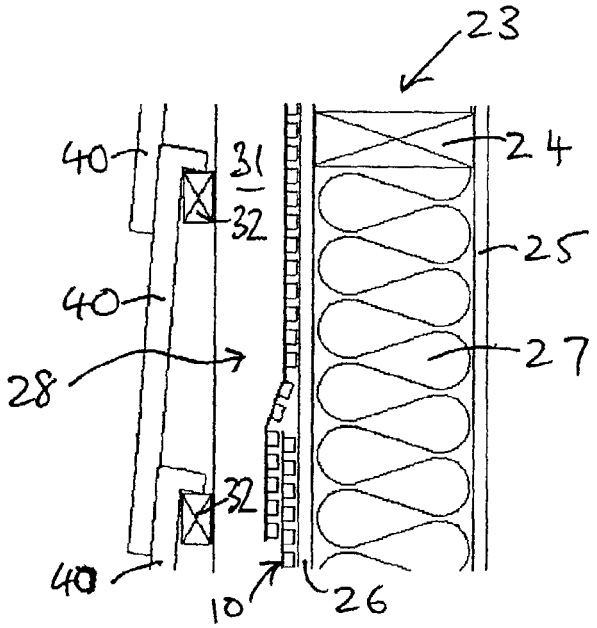

FIGURE 5

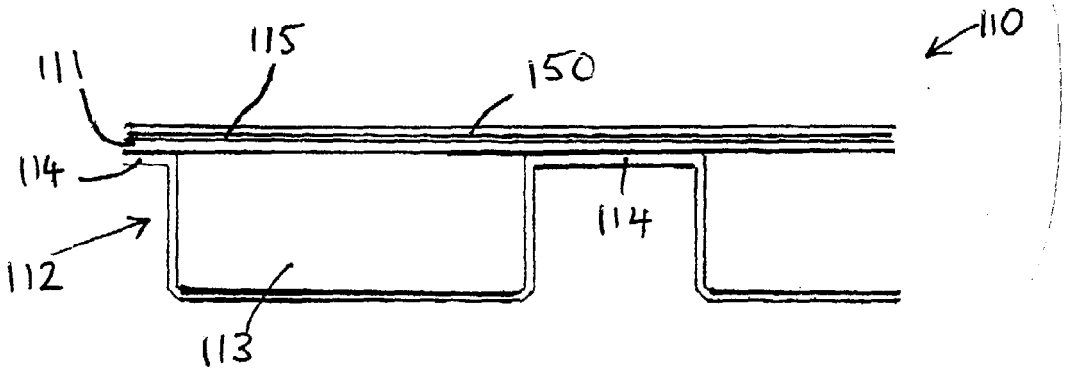

FIGURE 6

CAVITY WALL LINING SHEET

The present invention relates to cavity wall lining sheets and cavity wall constructions incorporating such lining sheets.

Cavity walls are well known and provide inner and outer walls which are spaced from each other to provide some degree of thermal insulation and a barrier to water penetrating the inner wall. The term cavity wall should, in the context of this specification, be taken to include cavity roof sections and angled walls as well as generally vertical walls.

According to a first aspect of the present invention there is provided a cavity wall lining sheet comprising a bubble sheet laminated on one major side only with a metal foil, the other major side being open thereby exposing the bubbles and allowing air to flow in the spaces between the bubbles.

Preferably the bubbles are circular in cross-section and also cylindrical in shape. In preferred arrangements the metal foil is a coated aluminium foil. It is a further preferred feature that the bubble sheet comprises a thermoplastic film laminated to a vacuum formed thermoplastic sheet. The thermoplastic film and sheet may, for example, be made of low-density polyethylene.

In preferred embodiments a further sheet is peelably attached to the exposed surface of the metal foil. With some arrangements said further sheet is made from polyethylene which is heat sealed to the exposed surface of the metal foil and also the further sheet is coloured or otherwise treated whereby glare from the metal foil is reduced.

According to a second aspect of the present invention there is provided a cavity wall construction having an inner wall and a spaced outer wall, the inner wall having attached to its outward facing surface a lining sheet as described above, the metal foil facing outwardly.

In some arrangements the outer wall is made of brick. In other arrangements the outer wall is made of tiles or cladding which are

mounted on battens attached to the inner wall with the lining sheet disposed between the battens and the inner wall. With these other arrangements the battens comprise first battens and second cross battens attached to the outward facing surfaces of the first battens.

With some cavity wall constructions, the inner wall comprises a structural frame of timber or other material having a sheathing board secured to its outermost surface. Usually wall ties link the inner and outer walls.

Preferred features are that vertical joints between adjacent lining sheets have an overlap and are taped with foil tape and also that horizontal joints between adjacent lining sheet have an upper lining sheet overlapping a lower lining sheet with the overlap left open.

Embodiments of the present invention will now be described in more detail. The description makes reference to the following drawings in which:

Figure 1 is a view from one side of a section of cavity wall lining sheet according to the present invention,

Figure 2 is an enlarged sectional view on line II-II of figure 1,

Figure 3 is a vertical section through a cavity wall construction incorporating the lining sheet shown in figures 1 and 2.

Figure 4 is a vertical section through an alternative cavity wall construction,

Figure 5 is a vertical section through a further alternative cavity wall construction, and

Figure 6 is a sectional view similar to figure 2 of a modified cavity wall lining sheet according to the present invention.

Figures 1 and 2 show a cavity wall lining sheet 10 comprising a thermoplastic film 11, which in this embodiment is a low-density polyethylene film, laminated on one major side to a vacuum formed thermoplastic sheet 12, which in this embodiment is also a low-density

polyethylene sheet. The thermoplastic sheet is vacuum formed to provide generally cylindrical bubble cells 13 arranged across the surface. As is known, the thermoplastic film 11 is laminated to those areas 14 which are not formed as cells. It is clear from the figures, the areas 14 result in space around the bubble cells 13 which enable passage of air/vapours around the bubble cells.

Laminated to the other major side of the thermoplastic film 11 is an aluminium foil 15 which has been coated, for example with polyethylene, to prevent corrosion. An alternative coating would be a thin coating of lacquer which improves the foil reflectivity and thus improves the insulation value of the construction described herein. The bubble cell side of the lining sheet 10 is, however, left open.

Figure 3 shows a cavity wall construction 20 comprising an outer wall 21 made from bricks 22 and an inner wall 23. The inner wall 23 in this embodiment comprises a timber frame 24 having an inner wall lining 25 and a sheathing board 26 attached to the outside of the timber frame 24. Insulation material 27 is provided between the inner wall lining 25, which may, for example, be plasterboard, and the sheathing board 26, which may, for example, be plywood, oriented strand board or wood particle board.

On the outward facing side of the sheathing board 26 is attached the cavity wall lining sheet 10, perhaps with staples or nails. The lining sheet 10 is attached with the bubble cells 13 against the sheathing board 26 such that the foil 15 faces outwardly into the cavity 28.

It is envisaged that wall ties would be provided at suitable locations to connect the inner and outer walls 23, 21, as is standard practise with cavity wall constructions. The wall ties are not, however, shown.

Ideally, the lining sheet 10 is fixed to the sheathing board 26 horizontally in strips perhaps 1000 mm wide, with each upper sheet 10 overlapping a lower sheet 10 as is clearly shown in figure 3. The overlap is left open at its lower edge. The amount of overlap is preferably about 75 mm but this could be longer or shorter. If sheets 10 are to meet vertically then again there should be an overlap of perhaps 100 mm and preferably the overlapping edge should be taped closed with foil tape of a suitable width.

It will be appreciated that the lining sheet 10, by virtue of its foil film 15, provides a flame retardant property for the inner wall 23. The lining sheet 10 also creates a wind-tight, draught-free, weather-sealed wall, providing a complete barrier to moisture moving inwards. However, the open nature of the cell structure lying against the sheathing boards 26 allows any water vapour present in the inner wall to exit via the channels between the cells 13 and into the cavity 28. Once in the cavity, the water vapour can exit the cavity via weep vents (not shown) in the brick work.

When the cavity wall is being constructed, the lining sheet 10 also offers some protection from the weather prior to construction of the outer wall 21 and the addition of a roof structure.

Figure 4 shows an alternative arrangement and like parts have been given the same reference numerals. In the alternative arrangement, the outer wall 21 is not made of bricks, but comprises external cladding 30. A set of vertical battens 31 are attached to the timber frame 24 through the lining sheet 10 at spaced locations horizontally along the wall. The external cladding 30 is then attached to the vertical battens 32 thus leaving a cavity 28 between the inner wall 23 and the external cladding 30. The lining sheet 10, therefore, performs the same functions and has the same effects as in the figure 3 arrangement.

Figure 5 shows a further alternative arrangement which is similar in some respects to figure 4. Like reference numerals have, therefore, been given to like parts. However, the external cladding panels 30 have been replaced by individual tiles 40 which are located on and secured to spaced horizontal counter battens 32 which are attached to the vertical battens 31. Again, this results in a cavity 28 between the inner walls 23 and the tiles 40. The lining sheet 10, therefore, performs the same functions and has the same effects as described above.

Figure 6 is similar in many respects to figure 2 and so like parts have been given like reference numerals with the addition of a "1" prefix. A further sheet 150 is included in the figure 6 embodiment. The further sheet 150 is made for example from polyethylene and is affixed to the exposed side of the foil 115 by a heat seal to form a light bond. The further sheet 150 is also coloured or otherwise treated so as to reduce glare from the foil surface, particularly during installation of the cavity wall lining sheet 110. Once the lining sheet 110 has been installed, or indeed at any other chosen time, the further sheet 150 can be peeled off the surface of the foil 115 to leave the foil surface exposed save for the corrosion prevention layer. Other methods of forming the peelable, light bond can be envisaged but heat sealing has been found to be acceptable.

It will be appreciated that the lining sheet 10 can be used in other cavity wall constructions not described above. Also the cavity wall constructions need not necessarily be vertical but could be angled, for example in roof situations.

Although the bubble cells 13 described above are cylindrical in shape, it will be understood that other shapes and sections are possible. Also the staggered arrangement of the rows of cells 13 could be varied provided there is still space around them for passage of air/vapour between the cells when the open side of the lining sheet 10 lies against the sheathing board 26.

CLAIMS

1. A cavity wall lining sheet comprising a bubble sheet laminated on one major side only with a metal foil, the other major side being open to expose the bubbles and allow air to flow in the spaces between the bubbles.

2. A cavity wall lining sheet as claimed in claim 1 wherein the bubbles are circular in cross-section.

3. A cavity wall lining sheet as claimed in claim 1 or claim 2 wherein the bubbles are cylindrical in shape.

4. A cavity wall lining sheet as claimed in any one of claims 1 to 3 wherein the metal foil is a coated aluminium foil.

5. A cavity wall lining sheet as claimed in any one of claims 1 to 4 wherein the bubble sheet comprises a thermoplastic film laminated to a vacuum formed thermoplastic sheet.

6. A cavity wall lining sheet as claimed in claim 5 wherein the thermoplastic film and sheet are made of low-density polyethylene.

7. A cavity wall lining sheet as claimed in any one of claims 1 to 6 wherein a further sheet is peelably attached to the exposed surface of the metal foil.

8. A cavity wall lining sheet as claimed in claim 7 wherein said further sheet is made from polyethylene which is heat sealed to the exposed surface of the metal foil.

9. A cavity wall lining sheet as claimed in claim 7 or claim 8 wherein the further sheet is coloured or otherwise treated whereby glare from the metal foil is reduced.

10. A cavity wall lining sheet as claimed in any one of claims 1 to 9 wherein the foil has a corrosion prevention coating of lacquer or polyethylene.

11. A cavity wall construction having an inner wall and a spaced outer wall, the inner wall having attached to its outward facing surface a lining sheet as claimed in any one of claims 1 to 10, the metal foil facing outwardly.

12. A cavity wall construction as claimed in claim 11 wherein the outer wall is made of bricks.

13. A cavity wall construction as claimed in claim 11 or claim 12 wherein wall ties link the inner and outer walls.

14. A cavity wall construction as claimed in claim 11 wherein the outer wall is made of tiles or cladding which are mounted on battens attached to the inner wall with the lining sheet disposed between the battens and the inner wall.

15. A cavity wall construction as claimed in claim 14 wherein the battens comprise first battens and second cross battens attached to the outward facing surfaces of the first battens.

16. A cavity wall construction as claimed in any one of claims 11 to 15 wherein the inner wall comprises a structural frame having a sheathing board secured to its outermost surface.

17. A cavity wall was claimed in claim 16 wherein the structural frame is made of timber.

18. A cavity wall construction as claimed in any one of claims 11 to 17 wherein vertical joints between adjacent lining sheets have an overlap and are taped with foil tape.

19. A cavity wall construction as claimed in any one of claims 11 to 18 wherein horizontal joints between adjacent lining sheets have an upper lining sheet overlapping a lower lining sheet with the overlap left open.

The Patent Office

INVESTOR IN PEOPLE

Application No:	GB 0207775.8	**Examiner:**	Richard Gregson
Claims searched:	1-19	**Date of search:**	3 October 2002

Patents Act 1977
Search Report under Section 17

Databases searched:

UK Patent Office collections, including GB, EP, WO & US patent specifications, in:

UK Cl (Ed.T): B5N

Int Cl (Ed.7): B32B (3/28, 15/08) : E04B (1/64)

Other: Online: EPODOC, WPI, JAPIO, RM25

Documents considered to be relevant:

Category	Identity of document and relevant passage		Relevant to claims
E,X	GB 2370049 A	(YORKSHIRE BUILDING) - see whole document.	1,5
E,X	GB 2367839 A	(YORKSHIRE BUILDING) - see whole document.	1,2,4,5,11 12,14,17,19 at least.

X	Document indicating lack of novelty or inventive step	A	Document indicating technological background and/or state of the art.
Y	Document indicating lack of inventive step if combined with one or more other documents of same category.	P	Document published on or after the declared priority date but before the filing date of this invention.
&	Member of the same patent family	E	Patent document published on or after, but with priority date earlier than, the filing date of this application.

(12) UK Patent Application (19) GB (11) 2 388 815 (13) A

(43) Date of A Publication 26.11.2003

(21) Application No: 0314282.5

(22) Date of Filing: 19.06.2003

(30) Priority Data:
(31) 0222005 (32) 21.09.2002 (33) GB

(71) Applicant(s):
Don & Low Ltd.
(Incorporated in the United Kingdom)
Glamis Road, FORFAR, Angus, DD8 1EY, United Kingdom

(72) Inventor(s):
David Avril
George Simpson
Kelly Filmer

(74) Agent and/or Address for Service:
Cruikshank & Fairweather
19 Royal Exchange Square, GLASGOW, G1 3AE, United Kingdom

(51) INT CL[7]:
B32B 27/12 // D01F 1/10 , E04B 1/62 7/00 , E04D 12/00

(52) UK CL (Edition V):
B5N N17X N17Y N175 N177 N178 N18X N180 N195 N196 N199 N20Y N207 N21Y N223 N225 N237 N244 N255 N257 N259 N261 N2712 N367 N368 N369 N37X N374 N377 N383 N389 N39Y N401 N402 N403 N418 N42X N42Y N420 N46X N463 N466 N471 N474 N477 N478 N48X N485 N488 N489 N501 N502 N503 N504 N507 N53X N53Y N55X N56X N56Y N560 N561 N564 N570 N572 N575 N577 N578 N58X N58Y N589 N59Y N591 N593 N603 N606 N614 N62X N62Y N627 N631 N632 N633 N635 N639 N648 N650 N658 N66Y N660 N661 N662 N670 N68Y N690 N70X N702 N705 N706 N707 N71Y N712 N734 N738 N76X N760 N761 N763
B5B BDF B352 B360 B363 B37Y B38Y
U1S S1591 S3023

(continued on next page)

(54) Abstract Title: **Improvements in and relating to liquid impermeable and liquid vapour/gas permeable fabrics**

(57) A vapour permeable fabric comprises a first reflective layer laminated to a second filamentous layer for example by calendering. The first reflective layer may comprise a single metallic or reflective foil, a polymeric foil with metallic (eg. aluminium or an alloy thereof) or reflective material applied thereto, or a laminate of multiple reflective foils interspersed with non reflective foils. The reflective layer may be microporous or micro perforated. The filamentous layer may comprise a non woven (eg spun-bonded) or a woven polymeric fabric. Suitable polymers for either layer include polypropylene, polyamides or polyesters. In an alternative embodiment the reflective layer comprises a filamentous layer wherein the filaments are spun from a blend comprising a polymeric material and a reflective material. Said reflective material may be supplied as a masterbatch and may comprise finely ground aluminium (or an alloy thereof) particles in a polymer matrix. The invented fabrics may be used in the construction industry for example as housewrap, as roofing or flooring underlay or in cavity wall insulation.

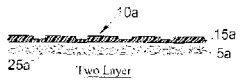

Fig. 1(a)

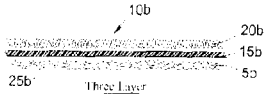

Fig. 1(b)

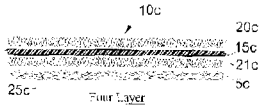

Fig. 1(c)

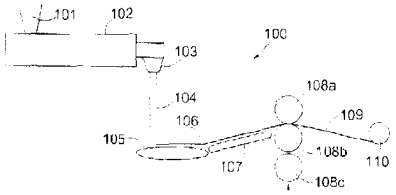

Fig. 2

At least one drawing originally filed was informal and the print reproduced here is taken from a later filed formal copy.

The claims were filed later than the filing date but within the period prescribed by Rule 25(1) of the Patents Rules 1995.

GB 2 388 815 A

(56) Documents Cited:
GB 2294426 A
WO 1996/032252 A
US 4230057 A
EP 1331316 A1
US 4569874 A

(58) Field of Search:
UK CL (Edition V) **B5N**
INT CL[7] **B32B, E04B, E04D**
Other: **Online: EPODOC, WPI, JAPIO**

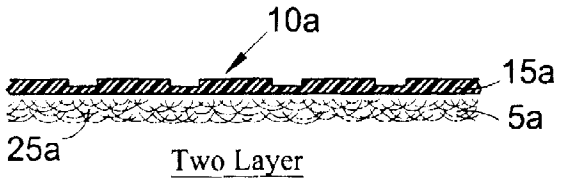

Fig. 1(a)

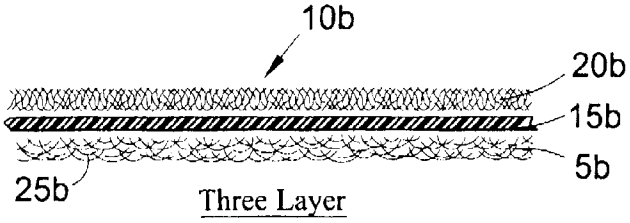

Fig. 1(b)

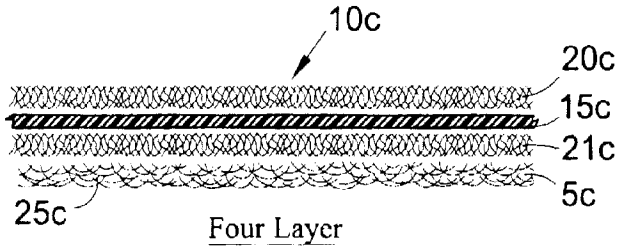

Fig. 1(c)

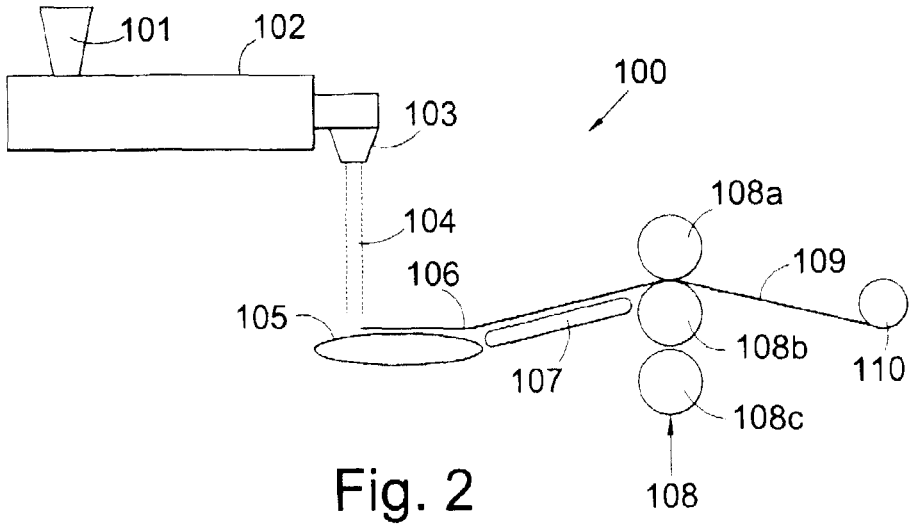
101
102
100
103
108a
104
109
106
105
108b
110
107
108c
108

Fig. 2

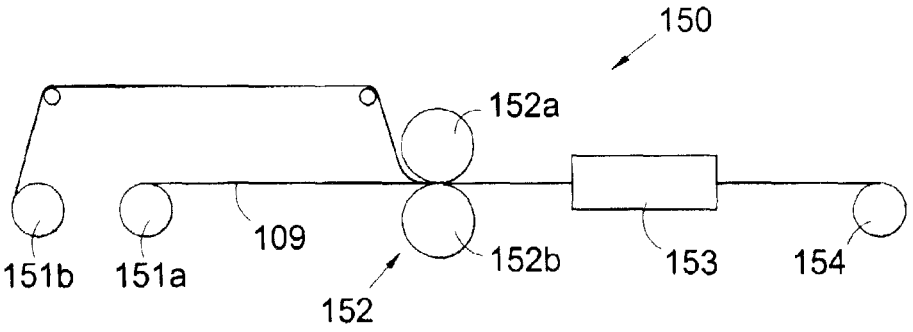
150
152a
109
152b
153
154
151b
151a
152

Fig. 3

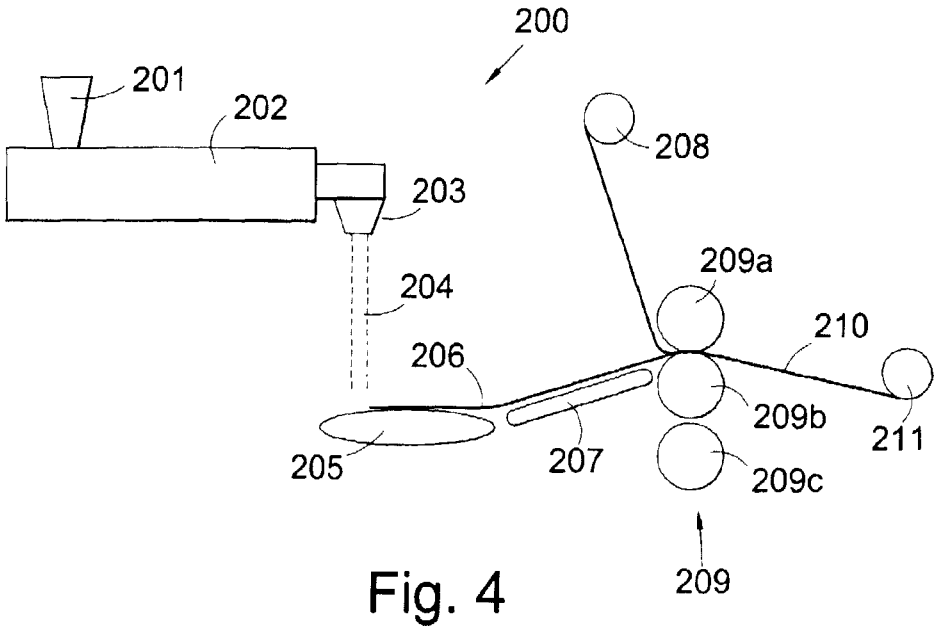
200
201
202
203
204
206
205
207
208
209a
210
209b
211
209c
209

Fig. 4

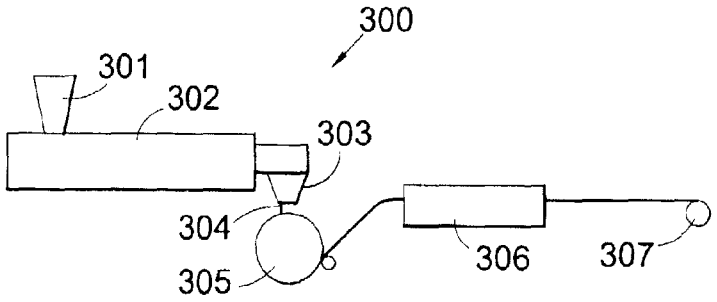
300
301
302
303
304
305
306
307

Fig. 5

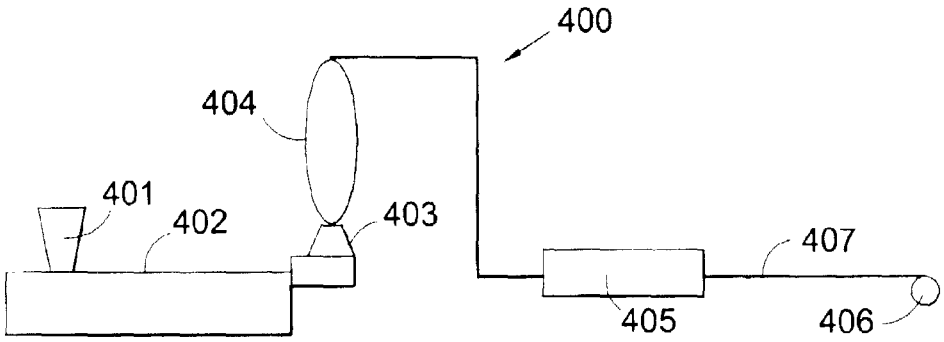

Fig. 6(a)

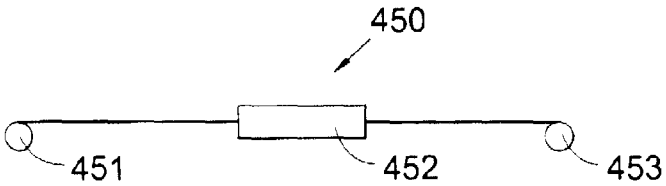

Fig. 6(b)

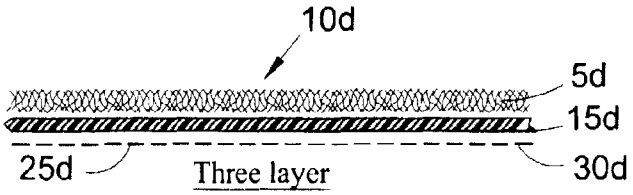

Fig. 7(a)

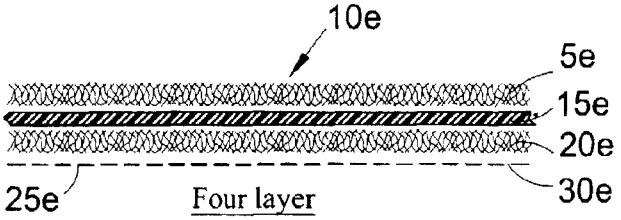

Fig. 7(b)

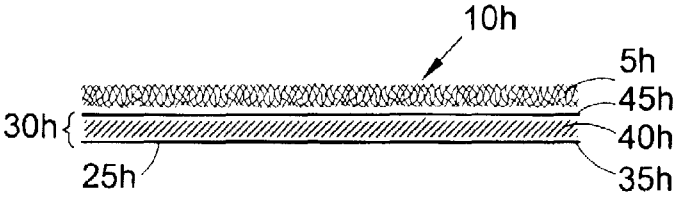

Fig. 7(c)

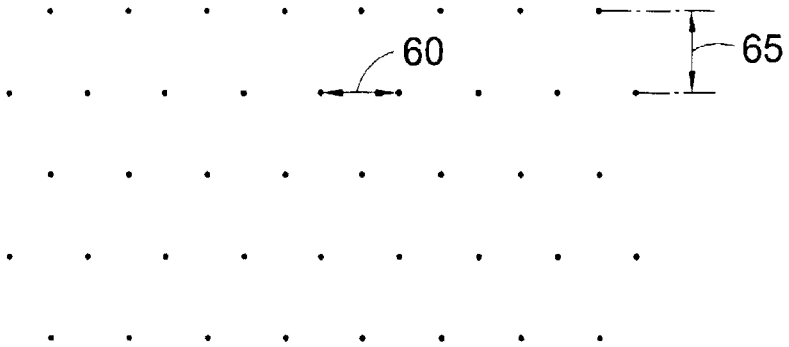

Fig. 7(d)

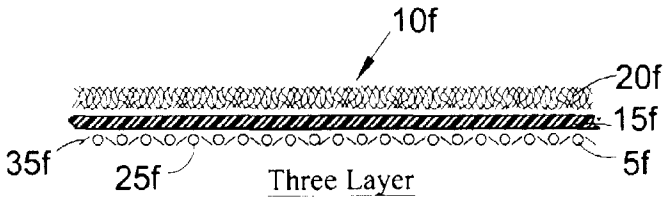
10f
20f
15f
35f
25f
5f
Three Layer

Fig. 8(a)

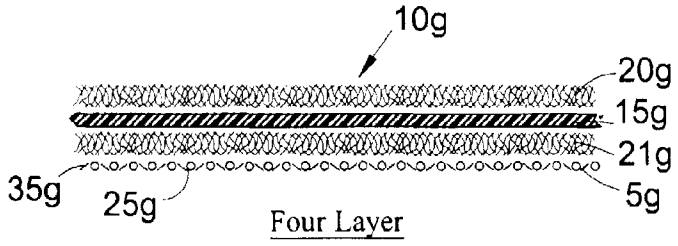
10g
20g
15g
21g
35g
25g
5g
Four Layer

Fig. 8(b)

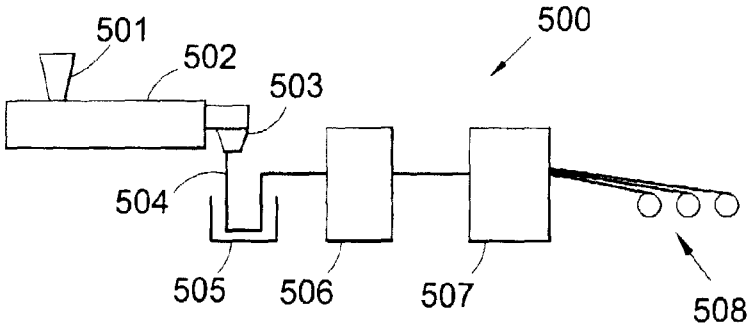
501
502
503
500
504
505
506
507
508

Fig. 9

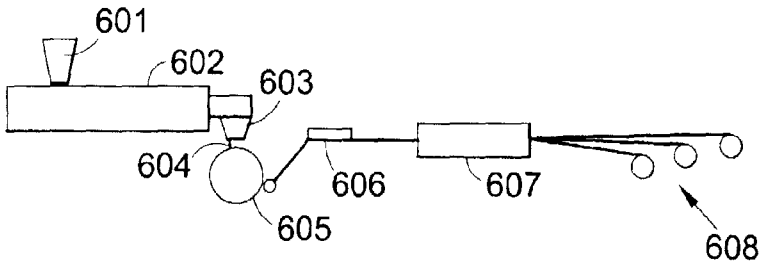
601
602
603
604
605
606
607
608

Fig. 10

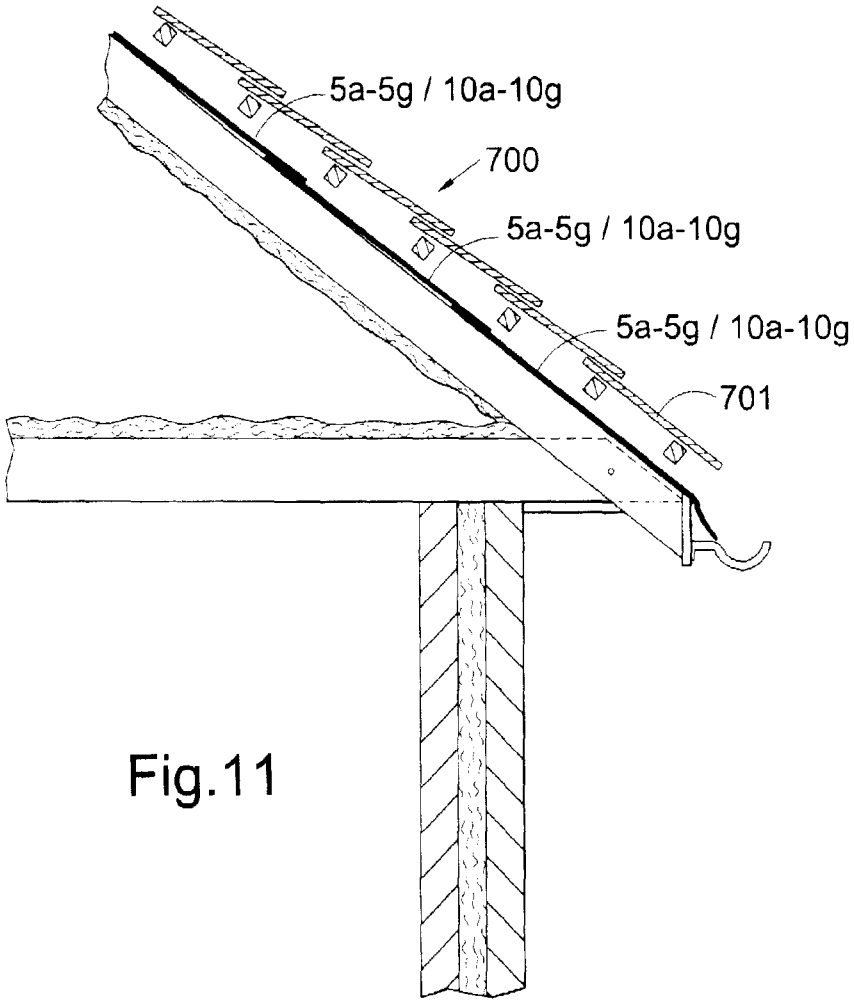

Fig.11

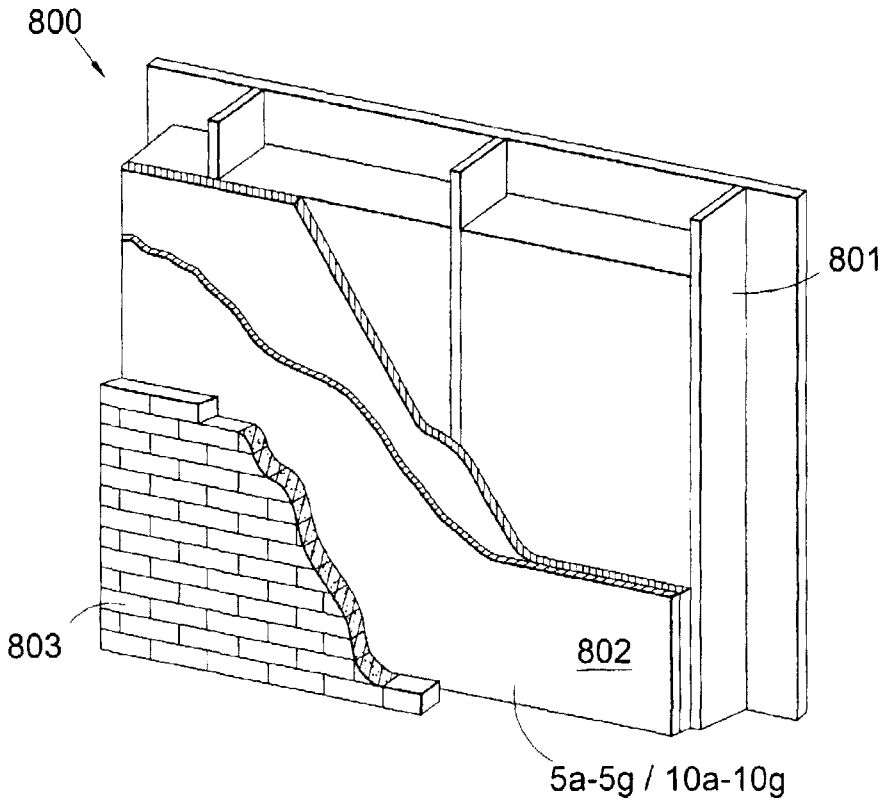

Fig. 12

IMPROVEMENTS IN AND RELATING TO LIQUID IMPERMEABLE AND LIQUID VAPOUR/GAS PERMEABLE FABRICS

FIELD OF INVENTION

The present invention relates generally to permeable fabrics such as liquid impermeable and liquid vapour/gas permeable fabrics. The invention more particularly, though not exclusively, relates to air and/or water vapour permeable fabrics. Such fabrics or materials may find particularly beneficial application as construction fabrics, such as in the building industry, e.g. as house-wrap or as roofing underlay or in flooring.

BACKGROUND TO INVENTION

Liquid impermeable and liquid vapour permeable materials, including laminates, are known.

Various films or membranes of coextruded or monolayer construction are available which, by virtue of a plurality of micropores or by molecular diffusion mechanisms, have the characteristics of providing a barrier to, for example, aqueous liquids, while at the same time allowing the passage of moisture vapour. A microporous membrane having such properties was previously made by Exxon Corporation under the trade name "EXXAIRE", a polyolefinic membrane with excellent vapour transport characteristics. Such is now available from their successor, Tredegar Film Products (formerly Exxon Films) as BF-116W. However, such membranes typically possess inadequate tensile strength properties and low resistance to tear for unsupported use, and in many applications require to be combined with other materials to improve these properties.

EP 0 570 215 A, by the present Applicant, discloses use of a laminate as a roofing underlay material wherein said laminate comprises: a liquid impermeable and liquid vapour permeable microporous membrane; and a substrate, the membrane and substrate being intermittently bonded to preserve the liquid vapour transmission properties of the membrane. The laminate is provided with a supporting substrate on both sides of the membrane, the membrane and the substrates being intermittently bonded to preserve the liquid vapour transmission properties of the membrane. In one form one or both of the substrates of said laminate is a spunbonded polymeric non-woven material. The spunbonded non-woven substrate of said laminate is formed as a web to be subsequently calender bonded simultaneously with thermal lamination to the membrane.

EP 0 570 215 A discloses that the spunbonded polymeric non-woven material may be ultra-violet (UV) stabilised. Further, the previously available "EXXAIRE" membrane was temperature stabilised. Thus EP 0 571 215 A discloses a breathable building membrane including an under layer formed of a microporous polymeric film and a top layer formed of a filamentous polymeric fabric which is bonded to the under layer, said under and top layers being disposed in overlying relationship and being stabilised respectively against heat degradation and ultraviolet light degradation.

The content of EP 0 570 215 A is incorporated herein by reference.

EP 0 742 305 A, also by the present Applicant, discloses use as a building material (and particularly as a roofing underlay) of a laminated fabric comprising at least two layers of non-woven sheet material, said fabric comprising:

(1) a first layer of compressed melt-blown material having an average pore size diameter in the range from 1 μm to about 8 μm; and

(2) a second layer of a material having an open porous structure,

and wherein the second layer of material is of a spun-bonded structure.

The layers comprising the fabric are bonded by a point-bonding technique, such as a calendering treatment.

The total area of said points is between 7% and 40% of the fabric area, and the compressed melt-blown material may be rendered into a compressed condition during lamination of the layers.

The content of EP 0 742 305 A is incorporated herein by reference.

GB 2 355 430 A by Hunt Technology Limited, discloses a breathable building membrane including an under layer formed of a microporous polymeric film and a top layer formed of a filamentous polymeric fabric (spunbond) which is bonded to the under layer, said under and top layers being disposed in overlying relationship and being stabilised respectively against heat degradation and ultraviolet light degradation, and said top layer having a top surface bearing a moisture vapour permeable

reflective coating. It is suggested that the reflective coating comprises a thin metallic layer, such as aluminium, the thin metallic layer being applied by plasma deposition onto the top surface of the top fabric layer to a thickness of about 40 nm. It is reported that wherein the fabric of the top layer is made from spunbonded filaments and wherein the deposited metallic coating coats the surfaces of the individual filaments which collectively form the top surface layers of the spunbonded fabric top layer, such that the deposited metallic coating does not form a discrete layer on the top surface of the top layer.

The content of GB 2 355 430 A is incorporated herein by reference.

GB 2 355 430 A notes a number of problems in the art, e.g. condensation within a roof or cavity wall space and infra-red (IR) loading on building membranes which may lead to material degradation. GB 2 355 430 A seeks to address such problems, but in a way which gives rise to other problems, including cost and complexity of material manufacture as well as material robustness.

It is an object of at least one embodiment of at least one aspect of the present invention to obviate or at least mitigate one or more of the aforementioned problems.

It is a further object of at least one embodiment of at least one aspect of the present invention to provide an improved building material such as a synthetic breathable building membrane suitable for use as a wall

breather membrane or housewrap, and also most preferably, for use as a roofing underlay.

It is noted by the present Applicant that roofing underlayment fabrics can rise up beneath roof tiles, causing rooftile lift in certain wind conditions. This phenomenon is measurable and is termed "wind lift". Stiff fabrics tend to address this problem by being less susceptible to lift by the wind. Stiff fabrics, however, may produce unwanted noise caused by flexing in windy conditions. A balance between fabric stiffness and noise levels is sought for building fabrics.

It is a further object of at least one embodiment of at least one aspect of the present invention to provide an improved building material which obviates or at least mitigates the abovementioned problems.

It is a yet further object of at least one embodiment of at least one aspect of the present invention to provide a building material having in combination a metallised gas permeable infra-red reflective means, ultraviolet light stabilisation means, and heat stabilisation means, which is moisture impermeable and gas and/or moisture vapour permeable to assist in guarding against roof space or cavity wall condensation, and which increases resistance of the building material to degradation, thereby increasing the life and durability of such material.

The inventors of the present invention have identified a need for an improved construction fabric, which has the following properties:

(i) the ability to resist the ingress of wind driven rain and snow;

(ii) good moisture vapour transmission properties; and

(iii) a surface or means capable of reflecting infra-red radiation/heat.

Fabrics meeting the requirements of (i) and (ii) are taught by EP 0 570 215 A and by EP 0 742 305 A. The present invention enhances the teaching of these disclosures by providing an infra-red reflecting surface to the products described in each of these documents. A method of achieving a reflecting surface by plasma coating of aluminium is described in GB 2 355 430 A. However, a disadvantage quoted in that disclosure is that some of the aluminium coating may rub off on the calender bowl during lamination, with a subsequent loss in reflectance. It is the present inventor's belief that in one or more embodiments of one or more aspects of the present invention disclosed herein, this problem will be addressed by complete encapsulation of the metallic component. There is also an additional advantage in that the metallic component will not flake off in handling during use, e.g. the construction process or transportation.

It is a still further object of one or more embodiments of one or more aspects of the present invention to provide a breathable building fabric having means for providing ultraviolet and heat stabilisation and moisture vapour permeable reflective means which acts to reduce the infra-red loading of the entire building

fabric, in use, thereby further increasing the resistance of the building membrane to degradation. Moreover, when the building fabric serves as a roofing underlay, during the construction or repair of a roof when the underlay can be totally exposed for periods, e.g. of three months or more, and affords the only protection to the building, the moisture vapour permeable reflective means enhances this protection.

SUMMARY OF INVENTION

According to a first aspect of the present invention there is provided a filamentous polymeric fabric, filaments of which comprise a polymeric material and a reflective material.

The filamentous polymeric material may be formed from a "spunbond" process, and may therefore be termed a spunbond fabric.

Preferably the filamentous polymeric fabric is breathable, that is to say moisture vapour permeable and preferably air/gas permeable.

Preferably the reflective material is capable of reflecting at least infra-red (IR) radiation and/or heat. Infra-red radiation is normally taken to be in the wavelength region 0.75 μm to 1,000 μm, and most particularly herein 5 μm to 50 μm.

The filamentous polymeric fabric preferably has an emissivity of about 0.1 to about 0.6, and preferably about 0.1 to 0.3.

Emissivity is a measure of reflectance, with a totally absorbing surface having an emissivity of 1

(one), and a totally reflecting surface having an emissivity of 0 (zero).

The reflective material may substantially comprise a metal or metallic based material, e.g. aluminium or an alloy thereof.

The polymeric material may comprise additives such as ultra-violet (UV) stabilisers, hydrophobic additives, flame retardants, pigments (e.g. colour pigments), and/or plasticisers.

The polymeric material may be a thermoplastic polymer, e.g. selected from polypropylene, polyamide or polyester.

According to a second aspect of the present invention there is provided a filamentous polymeric fabric filaments of which comprise a polymeric material having a metallic material added thereto.

According to a third aspect of the present invention there is provided a breathable fabric comprising a filamentous polymeric fabric according to the first or second aspects.

Preferably the breathable fabric comprises a laminate material including a first layer comprising the filamentous polymeric fabric and a second layer comprising a breathable polymeric membrane, e.g. a microporous or microperforated polymeric membrane. The microporous or microperforated polymeric membrane may be vapour permeable and liquid impermeable.

Preferably the first and second layers are intermittently bonded together. The first layer may

comprise a top (outer) layer, and the second layer may comprise an under (inner) layer.

The first and second layers may be stabilised respectively against ultra-violet light degradation and heat degradation.

The breathable polymeric membrane may comprise an ultra-violet (UV) stabilised breathable membrane which may or may not have a hydrophobic treatment applied via the melt or topically.

The breathable polymeric membrane may comprise a melt-blown film or a microporous or microperforated film. Such may provide good water hold-out properties combined with good moisture vapour transmission properties.

The membrane may be made from a thermoplastic polymer selected from: polypropylene, polyolefins, polyesters or polyamides.

The filamentous polymeric fabric may be made from a thermoplastic polymer selected from: polypropylene, polyolefins, polyesters or polyamides.

Preferably the breathable polymeric membrane comprises: a liquid impermeable and liquid vapour permeable membrane; and the filamentous polymeric fabric comprises a substrate, the membrane and substrate being intermittently bonded to preserve the liquid vapour transmission properties thereof.

The laminate may be provided with a supporting substrate on both sides of the membrane, the membrane and the substrates being intermittently bonded to preserve the liquid vapour transmission properties thereof.

The laminate may include a woven fabric layer.

The woven fabric of said laminate may be in the form of a scrim intermittently bonded to one of the other laminate components.

The woven fabric of said laminate may be bonded to the membrane.

In one form, one or both of the substrates of said laminate is a spunbonded polymeric non-woven material. The spunbonded non-woven substrate of said laminate may be formed as a web to be calender bonded either simultaneously (ON-LINE) or subsequently (OFF-LINE) with thermal lamination to the membrane. The web of said laminate may be of a weight of between 10 g/m^2 and 200 g/m^2. The web of said laminate may be of a weight of between 30 g/m^2 and 90 g/m^2.

The membrane of said laminate may be of monolayer or multilayer construction.

The layers of the laminate may be thermally bonded. The bonded area of said laminate may form between 5% and 50% of the surface area of the laminated layers, e.g. around 7½%. The bonded area of said laminate may form between 14% and 20% of the surface area of the laminated layers, and preferably around 19%.

The filamentous polymeric fabric may comprise a first spunbond fabric, and the breathable fabric may comprise the first spunbond fabric, the breathable polymeric membrane and a second spunbond fabric.

The first spunbond fabric and breathable polymeric membrane may be intermittently bonded by a first bonding pattern, and the breathable polymeric membrane and the second spunbond fabric may be intermittently bonded by a

second bonding pattern. The first bonding pattern and the second bonding pattern may be similar or may be dissimilar.

According to a fourth aspect of the present invention there is provided a breathable building or construction material comprising a filamentous polymeric fabric according to the first or second aspects, or a breathable fabric according to the third aspect.

The breathable building material may be adapted for use as a roofing underlay. However, the breathable building material may be advantageously adapted for use as a housewrap, e.g. in timber frame constructions, or as a wall breather membrane, or in other construction uses such as a temporary cover, e.g. a building cover or scaffolding cover, tent, tarpaulin or the like. The breathable building material may also find use as a flooring material.

According to a fifth aspect of the present invention there is provided use as a building or construction material of a filamentous polymeric fabric according to the first or second aspects or a breathable fabric according to the third aspect.

According to a sixth aspect of the present invention there is provided a method of manufacturing a filamentous polymeric fabric comprising the steps of:

providing a polymeric material and a reflective material; and

forming the polymeric material and the reflective material into a filamentous polymeric fabric.

Preferably the step of forming is carried out using a spunbond process.

Preferably the reflective material is a metallic material or a metal, and the polymeric material and reflective material are provided as a metallised polymer masterbatch, e.g. in pelletised form.

Advantageously the metal, e.g. aluminium, is finely ground and added to a polymeric melt used to produce the spunbond material.

The reflective component may be an aluminiumised/aluminised masterbatch.

Preferably the step of forming includes the further step of:

calendering the filamentous polymeric fabric, e.g. with a first point embossing pattern.

According to a seventh aspect of the present invention there is provided a method of manufacturing a filamentous polymeric fabric comprising the steps of:

providing a polymeric material having a metallic material added thereto; and

forming the polymeric material and the metallic material into a filamentous polymeric fabric.

According to an eighth aspect of the present invention there is provided a method of manufacturing a breathable fabric comprising the steps of:

forming a filamentous polymeric fabric according to the method of the sixth or seventh aspects;

providing a breathable polymeric membrane; and

laminating the filamentous polymeric fabric and the breathable polymeric membrane one to the other.

In one implementation (so-called "OFF-LINE") the filamentous polymeric fabric is formed and rolled prior to lamination.

In such method, the step of forming includes the steps of:

laying down filaments so as to form the filamentous polymeric fabric; and

calendering the filamentous polymeric fabric, e.g. with a first point embossing pattern.

Calendering is a thermal bonding technique involving the application of a combination of heat and pressure.

Further, in such method the steps of laminating includes the step of:

calendering the filamentous polymeric fabric and membrane together, e.g. with a second point emboss pattern.

The first and second point emboss patterns may be selected to be substantially the same or different.

In a second implementation (so-called "ON-LINE") the membrane is laid down on the (loose), i.e. unembossed or unbonded, filamentous polymeric fabric or vice versa.

In such method the step of laminating includes the step of:

calendering the filamentous polymeric fabric and membrane together, e.g. with a first point emboss pattern.

According to a ninth aspect of the present invention there is provided a building construction including a filamentous polymeric fabric according to the first or

second aspects, or a breathable fabric according to the third aspect.

The building construction comprises a roof such as a tiled roof structure. Alternatively, the building construction may comprise a timber frame or a cavity wall. Alternatively the building construction comprises a floor.

According to a tenth aspect of the present invention there is provided a building including a building construction according to the ninth aspect.

According to an eleventh aspect of the present invention there is provided a laminated breathable fabric having as a layer thereof a reflective film or membrane.

Preferably, the reflective film may comprise a breathable (moisture vapour permeable and optionally air/gas permeable) film, e.g. a microperforated or microporous metallised film. Microperforated film is believed by the Applicant to be advantageous to microporous film as microperforated films typically have a greater reflectance and, therefore, better infra-red (IR) performance.

The microperforated metallised film may comprise microperforations of 0.1 mm to 15 mm in diameter.

The microperforations or micropores may advantageously have a size of, e.g. around 0.1 mm to 1.0 mm, and preferably around 0.6 mm, and preferably also a surface coverage of around 2% to 10%.

Typically, there may be provided around 30 microperforated holes/inch^2.

The membrane may comprise a polymeric material and a reflective material.

Preferably the reflective material is capable of reflecting at least infra-red radiation and/or heat.

Preferably the reflective film or membrane has an emissivity of about 0.1 to about 0.6, and preferably about 0.1 to about 0.3.

The reflective material may substantially comprise a metal or metallic based material, e.g. aluminium or an alloy thereof.

The reflective membrane may comprise a single layer membrane.

Alternatively the reflective membrane may comprise a multiple layer membrane, e.g. a three layer membrane wherein a middle layer includes the reflective material. The membrane in such cases may be of an "AB" or "ABA" type, wherein "A" is a first polymeric material advantageously including a UV stabiliser, and "B" is a second polymeric material including the reflective material.

The reflective material may be provided as an additive to a polymeric material melt used to produce the membrane, e.g. as a finely ground metal, or metallic based material, e.g. aluminium or a material including aluminium.

In a multiple layer membrane, the melt additive may be used to provide a layer "B" of second polymer material

including the reflective material of an "AB" or "ABA" type membrane.

As another alternative, the reflective membrane may comprise a multiple layer membrane, e.g. a three layer membrane wherein a middle layer comprises the reflective material deposited onto one of the layers. For example, the membrane may be of an "AC" or "ACA" type in which "A" is a first polymeric material, advantageously including a UV stabilizer, and "C" is a reflective material deposited onto one of the first polymer material layers "A".

The first polymeric layer "A" may be around 10 μm to 30 μm in thickness, and preferably around 15 μm thick.

The reflective material "C" may be around 10 nm to 100 nm thick, and preferably around 40 nm thick.

The reflective material may be deposited by a deposition process, e.g. vacuum vapour deposition or plasma deposition.

The polymeric material(s) may comprise one or more additives such as ultra-violet (UV) stabilisers, hydrophobic additives, flame retardants, pigments (e.g. colour pigments), and/or plasticisers.

The polymeric material(s) may be a thermoplastic polymer(s), e.g. selected from polypropylene, polyamide or polyester.

The fabric may also comprise at least one breathable polymeric film or membrane layer, and/or at least one filamentous polymeric fabric layer.

Advantageously, in one embodiment the reflective film may be laminated to the at least one breathable polymeric membrane. In another embodiment the reflective

film may be laminated to the at least one filamentous polymeric fabric layer.

In one advantageous implementation, the laminated breathable fabric may comprise the reflective film, a breathable polymeric membrane and a filamentous polymeric fabric layer comprising a spunbond layer.

Preferably the film, membrane and spunbond layers are intermittently bonded to preserve the moisture vapour transmission properties thereof.

In a modification, a further spunbond layer is provided between the film and membrane. The further spunbond layer may provide additional strength.

Preferably the further spunbond layer contains an ultra-violet stabiliser and/or a hydrophobic additive.

Preferably the film, further spunbond layer membrane and spunbond layer are intermittently bonded to preserve the moisture vapour transmission properties thereof.

The laminated breathable fabric may include a woven fabric layer.

The woven fabric of said laminated breathable fabric may be in the form of a scrim intermittently bonded to one of the other laminate components.

The woven fabric of said laminated breathable fabric may be bonded to the at least one breathable polymeric film or membrane layer, or to the at least one filamentous polymeric fabric layer, or to the reflective membrane.

According to a twelfth aspect of the present invention there is provided a laminated breathable fabric

having as a layer thereof a metal or metallised film or membrane.

According to a thirteenth aspect of the present invention there is provided a breathable building or construction material comprising a laminated breathable fabric according to the eleventh or twelfth aspects.

The breathable building material may be adapted for use as a roofing underlay. Alternatively the breathable building material may be advantageously adapted for use as a housewrap e.g. for use in timber frame constructions, or as a wall breather membrane, or in other construction uses such as a temporary cover, e.g. a building cover or scaffolding cover, tent, tarpaulin or the like. The breathable building material may also find use as a flooring material.

According to a fourteenth aspect of the present invention there is provided use as a building or construction material of a laminated breathable fabric according to the eleventh or twelfth aspects.

According to a fifteenth aspect of the present invention there is provided a method of manufacturing a laminated breathable fabric comprising the steps of:

providing a reflective film;

providing a filamentous polymeric fabric; and

forming the reflective film and filamentous polymeric fabric into a laminated breathable fabric.

Preferably the step of forming is carried out by calendering.

Preferably, the reflective film is a microperforated film, e.g. of an "AB", "ABA", "AC" or "ACA" construction,

and the step of providing the film comprises the steps of forming the film and then microperforating the film.

According to a sixteenth aspect of the present invention there is provided a method of manufacturing a laminated breathable fabric comprising the steps of:

providing a metal or metallised film;

providing a filamentous polymeric fabric layer; and

forming the metal or metallised film and filamentous polymeric fabric into a laminated breathable fabric.

Preferably the step of forming is carried out by calendering.

According to a seventeenth aspect of the present invention there is provided a building construction including a laminated breathable fabric according to the eleventh or twelfth aspects.

The building construction comprises a roof such as a tiled roof structure. Alternatively, the building construction may comprise a timber frame or a cavity wall. Alternatively the building construction comprises a floor.

According to an eighteenth aspect of the present invention there is provided a building, including a building construction according to the seventeenth aspect.

According to a nineteenth aspect of the present invention there is provided a laminated breathable fabric comprising at least one breathable polymeric film or membrane layer, laminated to at least one filamentous polymeric fabric layer, wherein a reflective material is

provided on the breathable polymeric film or membrane layer.

The reflective material may comprise a layer of reflective material, and may be provided by a deposition process, e.g. vacuum vapour deposition or plasma deposition.

The reflective material may substantially comprise a metal or metallic based material, e.g. aluminium or an alloy thereof.

The filamentous polymeric fabric layer may substantially comprise a spunbond layer.

The breathable polymeric film may be provided between the reflective material and the at least one filamentous polymeric fabric layer.

Alternatively and advantageously the reflective material may be provided between the breathable polymeric film and the at least one filamentous polymeric fabric layer.

According to a twentieth aspect of the present invention there is provided a laminated breathable fabric comprising at least one breathable polymeric film or membrane layer, laminated to at least one filamentous polymeric fabric layer, wherein a metallic material is provided on the breathable polymeric film or membrane layer.

According to a twenty first aspect of the present invention there is provided a woven polymeric fabric,

strands of which comprise a polymeric material and a reflective material.

Preferably the strands are in the form of tapes.

Preferably the reflective material is preferably capable of reflecting at least infra-red (IR) radiation and/or heat.

Preferably the woven polymeric fabric has an emissivity of about 0.1 to about 0.6, and preferably about 0.1 to about 0.3.

The reflective material may substantially comprise a metal or metallic based material, e.g. aluminium or an alloy thereof.

The polymeric material may comprise additives such as ultra-violet (UV) stabilisers, hydrophobic additives, flame retardants, pigments (e.g. colour pigments) and/or plasticisers.

The tapes may be of a mono-layer construction.

Alternatively, the tapes may be of a multi-layer construction. In a multi-layer construction the reflective material may be added to an inner layer of a co-extruded tape.

In one embodiment the multi-layered tape may be a three layer construction wherein a centre layer contains the reflective material and the outer layers contain a UV stabiliser.

According to a twenty second aspect of the present invention there is provided a woven polymeric fabric strands of which comprise a polymeric material and a metallic material added thereto.

According to a twenty third aspect of the present invention there is provided a breathable fabric comprising a woven polymeric fabric according to the twenty first or twenty second aspects.

Advantageously the construction of the woven fabric is selected so as not to impair moisture vapour transmission properties of the fabric.

Preferably the breathable fabric comprises a laminate material including a first layer comprising the woven polymeric fabric and a second layer comprising a breathable polymeric membrane.

Preferably the first and second layers are intermittently bonded together, preferably to preserve the moisture vapour transmission properties thereof.

Preferably the breathable fabric further comprises a third layer of filamentous polymeric material, the first, second and third layers being intermittently bonded together preferably to preserve the moisture vapour transmission properties thereof.

Preferably the breathable fabric comprises a laminate material including a first layer comprising the woven polymeric fabric, and a second layer comprising a breathable polymeric membrane.

Preferably the first and second layers are bonded together. The first layer may comprise a top (outer) layer and the second layer may comprise an under (inner) layer.

The first and second layers may be stabilised respectively against ultra-violet light degradation, and heat degradation.

The breathable polymeric membrane may comprise an ultra-violet stabilised breathable membrane which may or may not have a hydrophobic treatment applied via the melt or topically.

According to a twenty fourth aspect of the present invention there is provided a breathable building or construction material comprising a woven polymeric fabric according to the seventeenth or eighteenth aspects, or a breathable fabric according to the twenty second aspect.

The breathable building material may be adapted for use as a roofing underlay. Alternatively the breathable building material may be advantageously adapted for use as a housewrap, e.g. in timber frame constructions, or as a wall breather membrane, or in other construction uses such as a temporary cover, e.g. a building cover or scaffolding cover, tent, tarpaulin or the like. The breathable building material may also find use as a flooring material.

According to a twenty fifth aspect of the present invention there is provided use as a building or construction material of a woven polymeric fabric according to the twenty first or twenty second aspects, or a breathable fabric according to the twenty third aspect.

According to a twenty sixth aspect of the present invention there is provided a method of manufacturing a woven polymeric fabric comprising the steps of:

providing a polymeric material and a reflective material;

forming the polymeric material and the reflective material into strands, e.g. tapes or threads;

weaving the strands together.

Preferably the reflective material is a metallic material or a metal, and the polymeric material and reflective material are provided as a metallised polymer masterbatch.

Advantageously the metal, e.g. aluminium, is finely ground and added to a polymeric melt used to produce the strands.

The reflective component may be an aluminiumised/aluminised masterbatch.

According to a twenty seventh aspect of the present invention there is provided a method of manufacturing a woven polymeric fabric comprising the steps of:

providing a polymeric material and a metallic material;

forming the polymeric material and the metallic material into strands; and

weaving the strands together.

According to a twenty eighth aspect of the present invention there is provided a method of manufacturing a breathable fabric comprising the steps of:

forming a woven polymeric fabric according to the method of the twenty fifth or twenty sixth aspects;

providing a breathable polymeric membrane; and

laminating the woven polymeric fabric and the breathable polymeric membrane one to the other.

According to the twenty ninth aspect of the present invention there is provided a building construction

including a woven polymeric fabric according to the seventeenth or eighteenth aspects, or a breathable fabric according to the twenty first aspect.

The building construction comprises a roof such as a tiled roof structure. Alternatively, the building construction may comprise a timber frame or a cavity wall. Alternatively the building construction comprises a floor.

According to a thirtieth aspect of the present invention there is provided a building including a building construction according to the twenty sixth aspect.

In a modification the breathable fabric further comprises a fourth layer of filamentous polymeric material between the woven polymeric fabric and the membrane.

Preferably the first layer, fourth layer, second layer and third layer are intermittently bonded, preferably to preserve the moisture vapour transmission properties thereof.

According to a thirty first aspect of the present invention there is provided strands, threads or tapes adapted for use in manufacture of the woven polymeric fabric of the twenty first or twenty second aspects or the breathable fabric of the twenty third aspect.

According to a thirty second aspect of the present invention there is provided a fabric comprising:

a polymeric fabric comprising a polymeric material and a reflective material, or

a polymeric material layer having formed thereon a continuous breathable layer comprising or including a reflective material.

The polymeric fabric or the polymeric material layer may advantageously be a filamentous polymeric fabric, or alternatively a breathable polymeric film or a woven polymeric fabric.

Preferably the polymeric fabric is made from a masterbatch comprising a polymeric material and a reflective material.

According to a thirty third aspect of the present invention there is provided a fabric comprising:

a polymeric fabric comprising a polymeric material and a metallic material, or

a polymeric material layer having formed thereon a continuous breathable layer comprising or including a metallic material.

According to a thirty fourth aspect of the present invention there is provided a breathable fabric comprising a fabric according to the thirty second or thirty third aspects.

According to a thirty fifth aspect of the present invention there is provided a breathable building or construction material comprising a fabric according to the thirty second or thirty third aspects.

According to a thirty sixth aspect of the present invention there is provided use as a building or

construction material of a fabric according to the thirty second or thirty third aspects.

According to a thirty seventh aspect of the present invention there is provided a method of manufacturing a polymeric fabric comprising the steps of:

providing a polymeric material and a reflective material;

forming the polymeric material and reflective material into a polymeric fabric.

Preferably the reflective material is added to the polymeric material as a melt additive.

According to a thirty eighth aspect of the present invention there is provided a method of manufacturing a polymeric fabric comprising the steps of:

providing a polymeric material and a metallic material;

forming the polymeric material and metallic material into a polymeric fabric.

According to a thirty ninth aspect of the present invention there is provided a method of manufacturing a breathable fabric comprising the steps of:

forming a polymeric fabric according to the method of the thirty seventh or thirty eighth aspects;

providing at least one breathable layer;

laminating the polymeric fabric and breathable layer one to the other.

BRIEF DESCRIPTION OF DRAWINGS

Embodiments of the present invention will now be described by way of example only, and with reference to the accompanying drawings, which are:

Figures 1(a), (b), (c)	schematic sectional side views of first, second and third embodiments of breathable fabrics according to the present invention;
Figure 2	a schematic diagram of an apparatus for manufacture of filamentous polymeric fabrics according to the present invention;
Figure 3	a schematic diagram of a lamination apparatus for manufacture of breathable fabrics according to the present invention;
Figure 4	a schematic diagram of an apparatus for manufacture of filamentous polymeric fabrics and lamination thereof to manufacture breathable fabrics

according to the present invention;

Figure 5 a schematic diagram of an apparatus for manufacture of a polymeric membrane in the form of a microperforated film for use in the breathable fabrics of Figures 1(a), (b) or (c);

Figures 6(a), (b) schematic diagrams of a production apparatus and a microperforation apparatus, respectively, for manufacture of a polymeric membrane in the form of a melt-blown film for use in the breathable fabrics of Figures 1(a), (b) or (c).

Figures 7(a), (b), (c) schematic sectional side views of fourth, fifth and sixth embodiments of breathable fabrics according to the present invention;

Figure 7(d) a schematic representation of a pattern of microperforations in a fabric according to the present invention.

Figures 8(a), (b)	schematic sectional side views of seventh and eighth embodiments of breathable fabrics according to the present invention;
Figure 9	a schematic diagram of an apparatus for manufacture of strands (tapes) for manufacture of the breathable fabrics of Figures 8 (a) or (b);
Figure 10	a schematic diagram of an alternative apparatus for manufacture of strands (tapes) for manufacture of the breathable fabrics of Figures 8(a) or (b);
Figure 11	a cross-sectional side view of a part of a roof including the fabric of Figures 1(a), (b) or (c), Figures 7(a), (b), (c) or Figures 10(a) or (b); and
Figure 12	a cut-away perspective view of a wall including the fabric of Figures 1(a), (b) or (c), Figures 7(a), (b), (c) or Figures 10(a) or (b).

DETAILED DESCRIPTION OF DRAWINGS

FIRST EXAMPLE

Referring to Figure 1(a), there is illustrated a filamentous polymeric fabric 5a according to a first embodiment of the present invention. Filaments of the filamentous polymeric fabric 5a comprise a polymeric material and a reflective metallic material.

The filamentous polymeric material 5a is formed from a "spunbond" process as will hereinafter be described in greater detail, and is therefore termed a "spunbond" fabric.

The filamentous polymeric fabric 5a is breathable, that is to say moisture vapour permeable and air permeable, and the reflective material is capable of reflecting at least infra-red (IR) radiation and/or heat. The reflective material typically substantially comprises a metal or metallic based material, and in this embodiment comprises aluminium or an alloy thereof.

The polymeric material can comprise additives such as an ultra-violet (UV) stabiliser, hydrophobic additives, flame retardants, pigments (e.g. colour pigments), and/or plasticisers. The polymeric material is a thermoplastic polymer, e.g. selected from polypropylene, polyamide or polyester, and in this embodiment is polypropylene.

A breathable fabric 10a comprises in part filamentous polymeric fabric 5a. The breathable fabric 10a comprises the filamentous polymeric fabric 5a and a

second layer comprising a breathable, e.g. microperforated or microporous polymeric membrane 15a. The breathable polymeric membrane 15a is vapour permeable and liquid impermeable.

The first and second layers 5a, 15a are intermittently bonded together, the first layer 5a comprising a top (outer) layer, and the second layer 15a comprising an under (inner) layer. The first and second layers 5a, 15a are advantageously stabilised respectively against UV light degradation and heat degradation. In this example the breathable polymeric membrane 15a comprises a UV stabilised breathable membrane, which may or may not have a hydrophobic treatment applied via the melt or topically. The breathable polymeric membrane 15a is selected from one of a melt-blown film or a microporous or microperforated film. Further, the membrane 15a is made from a thermoplastic polymer selected from: polypropylene, polyolefins, polyesters or polyamides, and in this embodiment polypropylene.

A melt blown fabric comprises a mass of micro-filaments, typically 1 μm to 5 μm diameter. This mass of filaments may or may not be calendered, i.e. the mass may be subjected to pressure with or without the application of heat. The calender rollers may be smooth, or a combination of smooth and embossed. The degree of calendering applied will depend on the required balance of properties of water hold out versus moisture vapour transmission.

A microporous film is prepared from a polyolefin/filler mix. The filler may be Calcium

Carbonate, Titanium Dioxide or similar. The film is stretched either mono-axially or bi-axially in such a way that micropores of approximately 0.2 μm are formed through the film. Such a process is described in the EP 0 309 073 A to Exxon.

The Applicant considers the addition of a UV stabiliser to prevent ultraviolet degradation on exposure to light to be beneficial. In addition, the properties of the membrane 15a may be enhanced by a hydrophobic agent which may be added to the melt or applied topically. The Applicant considers the use of a hydrophobic agent to be particularly beneficial in the case of a melt blown fabric, where it will improve the water holdout properties of the final product. In addition, contact with house timbers, which have been treated with water based timber treatments can have an adverse effect on the water hold out properties. This can be minimised by the application of a suitable hydrophobic treatment.

Thus the breathable polymeric membrane 15a comprises: a liquid impermeable and liquid vapour permeable membrane; and the filamentous polymeric fabric 5a comprises a substrate, the membrane and substrate being intermittently bonded to preserve the liquid vapour transmission properties thereof.

In a modification the breathable fabric 5a comprises only the filamentous polymeric fabric. Such may be sufficient for some less demanding applications, e.g. housewrap.

In a second embodiment shown in Figure 1(b), the laminate 10b is provided with a supporting substrate 5b, 20b on both sides of the membrane 15b, the membrane 15b and the substrates 5b, 20b being intermittently bonded to preserve the liquid vapour transmission properties thereof. The further supporting substrate 20b is also a filamentous polymeric fabric, the same or similar to the substrate 5b.

The laminate 10a, 10b optionally includes a woven fabric layer (not shown). The woven fabric of said laminate can be in the form of a scrim intermittently bonded to one of the other laminate components. The woven fabric of said laminate 10a;10b can be bonded to the membrane 15a;15b. In one form, one or both of the substrates 5a; 5b, 20b of said laminate 10a;10b is a spunbonded polymeric non-woven material. The spunbonded non-woven substrate 5a; 5b, 20b of said laminate 10a; 10b is/are formed as a web(s) to be subsequently calender bonded simultaneously with thermal lamination to the membrane 15a;15b. The web(s) of said laminate 10a; 10b are typically of a weight of between 10 g/m^2 and 200 g/m^2, and particularly between 30 g/m^2 and 90 g/m^2. The membrane 15a;15b of said laminate 10a;10b can be of monolayer or multilayer construction.

The layers of the laminate 10a; 10b are in this embodiment thermally calender bonded. The bonded area of said laminate 10a;10b forms between 5% and 50% of the surface area of the laminated layers, particularly between 14% and 20%, and advantageously around 19%.

In the second embodiment the filamentous polymeric fabric 5b comprises a first spunbond fabric, and the breathable fabric 10b comprises the first spunbond fabric 5b, the breathable polymeric membrane 15b and a second spunbond fabric 20b. The first spunbond fabric 5b and breathable polymeric membrane 15b are intermittently bonded together by a first bonding pattern, and the breathable polymeric membrane 15b and the second spunbond fabric 20b are intermittently bonded by a further bonding pattern. The bonding pattern and the further bonding pattern may be similar or may be dissimilar.

In a third embodiment shown in Figure 1(c) the laminate 10c is further provided with a third spunbond fabric 21c between the first spunbond fabric 5c and the membrane 15c.

The filamentous polymeric fabric 5a;5b;5c/ breathable fabric 10a;10b;10c find use as a breathable building or construction material 25a;25b;25c. The breathable building material 25a;25b;25c can be adapted for use as a roofing underlay. However, the breathable building material 25a;25b;25c can also advantageously be adapted for use as a housewrap, or alternatively wall breather membrane, or alternatively as a temporary cover, e.g. a building cover or scaffolding cover, or tent, tarpaulin or the like. The breathable building material 25a, 25b, 25c can also find use as a flooring material.

The filamentous polymeric fabric 5a;5b;5c is manufactured by a method comprising the steps of: providing a polymeric material and a reflective material; and forming the polymeric material and the reflective

material into the filamentous polymeric fabric 5a;5b;5c. The step of forming is carried out using a spunbond process. The reflective material is a metallic material or a metal, and the polymeric material and reflective material are provided as a metallised polymer masterbatch. Advantageously the metal (in this embodiment aluminium) is finely ground and added to a polymeric melt used to produce the spunbond material. The reflective component can be an aluminiumised/aluminised masterbatch such as SILVET® 210-30-E1 or ARX V 01/015 IR.

SILVET® 210-30-E1 available from Silberline Plastics Limited is an aluminised polymer masterbatch offering: very fine particle size aluminium flake pigment; low dusting, dry granular delivery form; compatibility with a wide range of thermoplastics. SILVET® 210-30-E1 provides a very fine particle size aluminium flake pigment in a free flowing, non-dusting, meterable, granular form. It provides direct pigmentation of extruded articles and colouration of masterbatch and compound, where its high metal content offers considerable formulating flexibility. This grade is compatible with a wide range of thermoplastics, including styrenics, polyolefins, polyamides, polycarbonates, polyesters and acetals. Due to its fine particle size, SILVET® 210-30-E1 has very high opacity. Loadings of 0.3% to 1.2% in the final pigmented article are typical. It is normally sufficient to tumble blend the granules with polymers and any other colorants and additives before processing. As with all aluminium flake pigments, the use of high shear forces

should be minimised as they cause loss of brightness and metallic effect.

Properties of SILVET® 210-30-E1 are:

Aluminium pigment content	= 69.0% minimum by weight
Carrier content	= 29.0% minimum by weight
Non-volatile content	= 98.5% minimum at 100°C
Median flake diameter	= approximately 8 μm.

ARX V 01/015 IR available from ARGUS Additive Plastics GmbH is an Infra-red-reflector-Masterbatch having an absorption region within the IR range.

The step of forming normally includes the further step of: calendering the filamentous polymeric fabric, e.g. with a point emboss pattern.

The breathable fabric 10a;10b;10c is manufactured by a method comprising the steps of: forming the filamentous polymeric fabric 5a;5b;5c; providing the breathable polymeric membrane 15a;15b;15c; and laminating the filamentous polymeric fabric 5a;5b;5c and the breathable polymeric membrane 15a;15b;15c one to the other.

Referring to Figures 2 and 3, in one implementation (so-called "OFF-LINE") the filamentous polymeric fabric 5a;5b;5c is formed and rolled prior to lamination. The filamentous polymeric fabric 5a;5b;5c is formed by spunbond apparatus 100, and laminated by laminator 150, as will hereinafter be described.

In such method, the step of forming includes the steps of: laying down filaments so as to form the filamentous polymeric fabric 5a;5b;5c and calendering the filamentous polymeric fabric 5a;5b;5c, e.g. with a first point emboss pattern. Calendering is a thermal bonding

technique involving the application of a combination of heat and pressure.

Further, in such method the steps of laminating includes the step of calendering the filamentous polymeric fabric 5a;5b;5c and membrane 15a;15b;15c together, e.g. with a second point emboss pattern.

The first and second point emboss patterns can be selected to be substantially the same or different.

The spunbond apparatus 100 comprises a polymer feed for forming filaments and a plurality of filament spinners 103. Additives such as the reflective material can be introduced in the polymer feed prior to melting and subsequent mixing in an extruder. Filaments are cooled by cooling means 104 and loose laid as a web 106 on a spinbelt 105. A conveyor 107 conveys the web 106 to a point bonding calender 108. The calender 108 has three embossing bowls, a first embossing bowl 108a with a 19% embossing area (so-called STANDARD BOND) and a diamond embossing pattern, a second bowl 108b which is smooth, and a third bowl 108c with a 72% embossing area (so-called LO-BOND) with a round embossing pattern. The web 106 is selected to be passed between the first and second bowls 108a, 108b or the second and third bowls 108b, 108c dependent upon the embossing pattern to be selected. After calendering the web 106 forms a spun fabric 109, i.e., the filamentous polymer fabric 5a, 5b, 20b; 5c, 20c, 21c. The spunbond fabric 109 is then rolled on wind-up roller 110.

The spunbonding processing thus involves passing a polymer melt through a die with a plurality of holes, to

form a mass of filaments. The filaments are stretched, cooled, and formed into a loose web on a conveyor belt, and then passed through a calender. The calender comprises a smooth roller and an embossed roller, the embossing pattern of which may typically cover from 72% to 35% of the surface area, and which may be a diamond, round or other shape. The smooth bowl of the calender should be of the swim roll type, i.e. is capable of being 'bent' to accommodate variations in thickness of the web. Both bowls of the calender should be heated, the temperature selected being dependent on the type of polymer being processed, and on the balance of properties required in the end product.

The laminator 150 comprises unwind stands 151a,151b from which a reel of spunbond fabric 109 and membrane 15a;15b;15c, respectively are unrolled and passed through a laminating calender 152. The calender 152 has two embossing bowls, a first embossing bowl 152a with an embossed pattern and a second bowl 152b which is smooth. The embossed pattern may be the same as that of one of the embossed bowls 108a, 108c of the spunbond apparatus 100 or may be different. The laminator 150 also comprises an accumulator 153 and a winder 154.

Referring to Figure 4, in a second implementation (so-called "ON-LINE") the filamentous polymeric fabric 5a;5b;5c is laid down (loose) on the membrane. The filamentous polymeric fabric 5a;5b;5c is formed and laminated by spunbond/laminator apparatus 200.

In such method the step of laminating includes the step of calendering the filamentous polymeric fabric

5a;5b;5c and membrane 15a;15b;15c, e.g. with a point emboss pattern.

The spunbond/laminator apparatus 200 is similar to the spunbond apparatus 100 of Figure 2. However, in the apparatus 200 there is provided a film unwind stand from which a roll of membrane 15a;15b;15c is unwound and laminated to unbonded web 206.

In the case where the membrane 15a;15b;15c is a microperforated film, the membrane 15a;15b;15c can be manufactured by cast film apparatus 300 shown in Figure 5. The cast film apparatus 300 comprises a polymer feed 301, an extruder 302 including a film extrusion means 303 for forming a film 304 (membrane 15a;15b;15c), a chill roll 305, a film orientation means 306 (mono or bi-axial) and a film winder 307.

Alternatively in the case where the membrane 15a;15b;15c is a microperforated film the membrane 15a;15b;15c can be manufactured by blown film apparatus 400 and microperforation apparatus 450 shown in Figures 6(a) and (b) respectively. Blown film apparatus 400 comprises a polymer feed 401, extruder 402 including film extruder means 403 for forming a blown film bubble 404 to provide film 407 (membrane 15a:15b:15c), a film orientation means 405 (mono- or bi-axial) and a film winder 406.

Microperforation apparatus 450 comprises an unwind stand 451, microperforation means 452 and wind up stand 453.

It will be appreciated that the filamentous polymeric fabrics 5a;5b;5c forming part of a laminate of

an embodiment of the present invention may be used as a single layer product. In such case the filamentous polymeric fabric may have a weight of around 100 g/m^2 to 150 g/m^2. In other cases, e.g. the two-layer fabric 5a, the filamentous polymeric fabric may have a weight of around 60 g/m^2 to 100 g/m^2 and the membrane 15a may have a weight of around 30 g/m^2 (and typically a thickness of around 30 microns).

SECOND EXAMPLE

Referring to Figure 7(a) there is illustrated a laminated breathable fabric 10d according to a fourth embodiment of the present invention having as a layer thereof a reflective film or membrane 30d.

The reflective film 30d comprises a breathable (moisture vapour permeable and optionally air permeable) film, and in this embodiment a microperforated metallised film. The reflective film 30d advantageously contains a UV stabiliser. In this embodiment, the reflective film 30d comprises a gas barrier polypropylene film having a metal (e.g. aluminium) foil laminated thereto.

The reflective film 30d typically has a thickness of 25 μm to 30 μm, and is manufactured by a cast or blown method. The reflective film 30d is microperforated so as to be gas permeable and then laminated to the at least one breathable polymeric membrane 15d. The microperforations are typically of the order of 0.1 mm to 1.0 mm in diameter.

The fabric 10d comprises the at least one breathable polymeric membrane layer 15d, and also at least one filamentous polymeric fabric layer 5d.

As illustrated in Figure 7(a) the reflective film 30d is laminated to the at least one breathable polymeric membrane 15d. In a modification, however, the reflective film 30d is laminated to the at least one filamentous polymeric fabric layer 5d.

As shown in Figure 7(a) the laminated breathable fabric 10d comprises the reflective film 30d, the breathable polymeric membrane 15d and the spunbond filamentous polymeric fabric layer 5d. The film 30d, membrane 15d and spunbond 5d are intermittently bonded to preserve the moisture vapour transmission properties thereof.

In a fifth embodiment shown in Figure 7(b) a further spunbond layer 20e is provided between the film 30e and membrane 15e. The further spunbond layer 20e provides additional strength.

A sixth embodiment is shown in Figure 7(c) which illustrates a laminated breathable fabric 10h having as a layer thereof a reflective film 30h. The reflective film 30h comprises a three layer structure comprising a first polyolefin polymer layer 35h formed, e.g. of polypropylene or a copolymer of polyethylene and polypropylene, upon which is deposited a second layer 40h of metal, such as aluminium, e.g. by vacuum vapour or plasma deposition. Third layer 45h comprises a polymer layer also formed of polypropylene or a copolymer of polyethylene and polypropylene.

The reflective film 30h typically has a thickness of 25 μm to 30 μm, and is typically manufactured by a cast or blown method employing the apparatus of Figures 5 or 6(a).

The reflective film 30h is made by, for example, forming a first polymer layer 35h, followed by vacuum vapour or plasma deposition of a layer 40h of aluminium metal upon the polymer layer 35h. The polymer layer 35h with the metal deposit layer 40h formed thereon is then laminated to a second polymer layer 45h using a calender with, for example, heated smooth rolls. The polymer layers 35h and 45h typically have a thickness of approximately 15 um. The metal layer 40h typically has a thickness of the order of 40 nm.

The fabric 10h also comprises at least one spunbond filamentous polymer fabric layer 5h.

The three layer reflective film 30h is formed and microperforated, e.g. employing the apparatus of Figure 6(b), prior to lamination to the at least one spunbond filamentous polymer fabric layer 5h. The microperforations are typically of the order of 0.1 mm to 1.0 mm in diameter.

Typically the reflective film 30h has an optical density of 2 to 2.5, as measured by a Tobias Densitometer.

The emissivity of the microperforated reflective film 30h was measured according to ASTM C 1371-98, giving a value of typically 0.23 to 0.28, and in one case 0.14.

Figure 7(d) shows a typical pattern of microperforations in the reflective film 30h which are

spaced apart, typically at around 4.5 mm and 5 mm, in an offset pattern as shown by arrows 60 and 65 respectively. The microperforated offset pattern assists in maintaining the strength of the reflective film 30h.

As shown in Figure 7(c) the laminated breathable fabric 10h comprises the reflective film 30h and the spunbond filamentous polymeric fabric layer 5h. The film 30h and spunbond 5h are intermittently bonded to preserve the moisture vapour transmission properties thereof in a similar manner to the first and second embodiments. Such bonding may be performed using an embossed calender.

During lamination of the reflective film 30h to the spunbond layer 5h, the polymer layer 45h of the reflective film 30h is optionally caused to melt and thereby adhere to the spunbond layer 5h. In this way, polymer layer 45h can be considered to be a so-called hot melt adhesive.

Like layers of the fabrics 10d;10e;10h comprise the same material as those of the fabrics 5a;5b of the first and second embodiments. Particularly the spunbond layers 5d;5e;15e;5h can contain a UV stabiliser and/or a hydrophobic additive.

Also the film 30d;30e, further spunbond 20d, membrane 15d;15e, and spunbond 5d;5e are intermittently bonded to preserve the moisture vapour transmission properties thereof, in a similar manner to the first and second embodiments.

The laminated breathable fabric 10d;10e;10h finds use as a breathable building or construction material 25d;25e;25h. The breathable building material

25d;25e;25h can be adapted for use as a roofing underlay. However, alternatively the breathable building material 25d;25e;25h can advantageously be adapted for use as a housewrap or wall breather membrane, or alternatively as a temporary cover, e.g. a building cover or scaffolding cover, or tent, tarpaulin or the like. The breathable building material 25d, 25e, 25h may also find use as a flooring material.

The laminated breathable fabric 10d;10e;10h is manufactured by a method comprising the steps of: providing the reflective film 30d;30e;30h forming a filamentous polymeric fabric 5d;5e;5h and forming the reflective film 30d;30e;30h and filamentous polymeric fabric 5d;5e;5h into the laminated breathable fabric 10c;10d;10h. The step of providing the reflective film 30d;30e;30h may be carried out using the apparatus of Figure 5 or Figures 6(a) and (b).

In respect of reflective film 30d;30e, the reflective material is a metallic material or a metal, and the polymeric material and reflective material are provided as a metallised polymer master-batch. The metal, e.g. aluminium, is finely ground and added to a polymeric melt used to produce the reflective membrane. The manufacture of such a membrane comprising a microporous polypropylene film is described in EP 0283 200 A by Exxon. The aluminised masterbatch is a concentrate of finely ground aluminium particles in a suitable carrier to give good dispersion throughout the melt.

The step of forming is carried out by calendering. Such method may be carried out "OFF-LINE" using the apparatus of Figures 2 and 3 or "ON-LINE" using the apparatus of Figure 4.

The fabric 10d may comprise a reflective film 30d having a weight of around 30 g/m^2, a membrane 15d having a weight of around 25 g/m^2 to 35 g/m^2 and a filamentous polymeric fabric layer 5d having a weight of around 60 g/m^2 to 100 g/m^2.

The fabric 10h may comprise a reflective film 30h having a weight of around 30 g/m^2 and a filamentous polymeric fabric layer 5h having a weight of around 60 g/m^2 to 100 g/m^2.

It will be understood that breathable membranes are typically inherently weak, and in order to achieve the high tensile and nail tear properties required by the construction industry, the membrane can be reinforced by combining it with a reinforcing layer or layers. The preferred reinforcing layer(s) as disclosed is a nonwoven fabric produced by a spunbonding process referred to herein as a 'spunbond', but other types of reinforcing, such as a carded nonwoven fabric or a woven fabric or scrim, may be provided, either in place of the spunbond or in addition to the spunbond.

THIRD EXAMPLE

Referring to Figure 8(a) there is illustrated a woven polymeric fabric 5f according to a seventh embodiment of the present invention, strands of which

comprise a polymeric material and a reflective material. The strands are in the form of tapes 35f.

The reflective material is capable of reflecting at least infra-red (IR) radiation/heat. The reflective material typically substantially comprises a metal or metallic based material, and in this embodiment comprises aluminium or an alloy thereof.

The polymeric material can comprise additives such as ultra-violet (UV) stabiliser, hydrophobic additives, flame retardants, pigments (e.g. colour pigments) and/or plasticisers.

The tapes 35f can be of a mono-layer construction. Alternatively, the tapes 35f can be of a multi-layer construction. In a multi-layer construction the reflective material can be added to an inner layer of a co-extruded tape 35f. In one embodiment the multi-layered tape 35f is a three layer construction, wherein a centre layer contains the reflective material and the outer layers contain a UV stabiliser.

A breathable fabric 10f comprises in part woven polymeric fabric 5f. The construction of the woven fabric 5f is selected so as not to impair moisture vapour transmission properties of the fabric 10f.

The breathable fabric 10f comprises a laminate material including a first layer comprising the woven polymeric fabric 5f and a second layer comprising a breathable polymeric membrane 15f. The first and second layers 5f,15f are intermittently bonded together preferably to preserve the moisture vapour transmission properties thereof.

The breathable fabric 10f comprises a third layer of filamentous polymeric material 20f, the first, second and third layers 5f,15f,20f being intermittently bonded together to preserve the moisture vapour transmission properties thereof.

The breathable fabric 10f thus comprises a laminate material including a first layer comprising the woven polymeric fabric 5f, and a second layer comprising a breathable polymeric membrane 15f. The first layer 5f comprises a top layer and the second layer 15f comprises an under layer. The first and second layers 5f,15f are stabilised respectively against ultra-violet light degradation and heat degradation. The breathable polymeric membrane 15f comprises a UV stabilised breathable membrane, which may or may not have a hydrophobic treatment applied via the melt or topically.

In an eighth embodiment as shown in Figure 8(b) the laminate 10g is further provided with a further spunbond fabric 21g between the woven fabric 5g and the membrane 15g. Thus in the seventh embodiment the breathable fabric 10g further comprises a fourth layer of filamentous polymeric material 21g between the woven polymeric fabric 5g and the membrane 15g.

The first layer 5g, fourth layer 21g, second layer 15g and third layer 20g are advantageously intermittently bonded preferably to preserve the moisture vapour transmission properties thereof.

The woven polymeric fabric 5f;5g/breathable fabric 10f;10g find use as a breathable building material 25f;25g. The breathable building material 25f;25g can be

adapted for use as a roofing underlay. However, the breathable building material 25f;25g can advantageously be adapted for use as a housewrap or wall breather membrane, or alternatively as a temporary cover, e.g. a building cover or scaffolding cover, tent, tarpaulin or the like. The breathable building material may also find use as a flooring material.

The woven polymeric fabric 5f;5g is manufactured by a method comprising the steps of: providing a polymeric material and a reflective material; forming the polymeric material and the reflective material into strands, e.g. tapes or threads; and weaving the strands together. The reflective material is a metallic material or a metal, and the polymeric material and reflective material are provided as a metallised polymer masterbatch as is the first example.

The breathable fabric 10f;10g is manufactured by a method comprising the steps of: forming the woven polymeric fabric 5f;5g; providing a breathable polymeric membrane 15f;15g; and laminating the woven polymeric fabric 5f;5g and the breathable polymeric membrane 15f;15g one to the other.

Such method can be carried out using either of the tape forming apparatus 500, 600 of Figures 9 or 10, a weaving loom (not shown), either of the membrane forming apparatus 300; 400, 450 of Figure 5 or Figures 6(a) and (b), respectively, and the lamination apparatus 150 of Figure 3.

The tape forming apparatus 500 of Figure 9 comprises a spinneret apparatus having a polymer feed 501, an

extruder 502 including a tape extrusion means 503 for forming spun tapes 504, a quencher 505, an accumulator 506, an orientation/annealing means 507 and wind up spools 508.

The tape forming apparatus 600 of Figure 10 comprises a slit film apparatus having a polymer feed 601, an extruder 602 including a tape extrusion means 603 for forming a cast film 604, a chill roll 605, a film slitting means 606, an orientation/annealing means 607 and wind up spools 609 for tapes 610.

The fabric 10f,10g may comprise a woven fabric 25f,25g, having a weight of around 50 g/m^2, a membrane 15f,15g having a weight of around 30 g/m^2, and a filamentous polymeric fabric 20f,20g having a weight of around 30 g/m^2 to 100 g/m^2.

Referring now to Figure 11, there is shown a cross-sectional side view of part of a building construction comprising a roof 700, e.g. a tiled roof, including a filamentous polymeric fabric 5a-5g/ breathable fabric 10a-10g as a roofing underlay and a plurality of tiles 701. As can be seen, the roof 700 may include a plurality of overlapping lengths of fabric 5a-5g, 10a-10g.

Referring finally to Figure 12, there is shown a cross-sectional side view of part of a building construction comprising a cavity wall 800 of a timber frame 801, including a filamentous polymeric material 5a-5g/breathable fabric 10a-10g as a "housewrap", (i.e. an outermost skin 802 of a timber frame 801), the construction being finished by external skin 803

comprising bricks or the like. The building is typically constructed by erecting the timber frame 801 with outermost skin 802 and thereafter finished with the external skin 803.

It will be appreciated that the embodiments of the present invention hereinbefore described are given by way of example only, and are not meant to limit the scope of the invention in any way.

It will be understood that although the fabrics of the present invention find particularly advantageous use in the building and/or construction industry, the fabrics of the invention may also find use in other sectors. Normally in such use, including roofing and housewrap, the reflecting layer can be disposed so as to be outer facing, e.g. to keep heat in and/or out. However, it will be appreciated that a reflective side of the breathable fabrics according to the present invention may be disposed outermost or innermost, e.g. in construction or building applications.

Also, a non-reflective/non-metallic side of a laminated fabric of the present invention may be non-pigmented or pigmented. For example, the colour white is preferred to augment the non-IR absorptive aspect of the fabric. Alternatively, the non-reflective/non-metallic side may be coloured, e.g. green.

Further, although the disclosed examples suggest calendering as the preferred lamination technique, other techniques may be suitable, e.g. ultrasonic spot welding or adhesive bonding.

The preferred disclosed lamination process is a thermal bond technique; hence one should select polymers for the membrane and reinforcing fabric(s), which are thermally compatible. The lamination process may be carried out in line, i.e. during the spunbond manufacturing process, when the membrane is fed on to the web on unbonded fibres prior to calendering. The mass is then passed through the calender where the fibres are bonded to each other and to the membrane simultaneously.

Alternatively and beneficially the lamination may be carried out of line, i.e. as a totally independent process, where each component is already partly or wholly bonded, or is a microporous film. Components are passed simultaneously through a free standing calender with a smooth and embossed roller. In either case, the embossed roller should have an embossing area of 72% to 35% of the surface area, and should have a diamond, round or other shape. The smooth roll should be of the swim roll type.

Other lamination methods, such as ultrasonic or adhesive may be used, but it is desired that, whatever method is selected, bonding is carried out at discrete points only, so as not to impair the Moisture Vapour Transmission properties of the end product.

CLAIMS

1. A laminated breathable fabric having as a layer thereof a reflective film or membrane.

2. A laminated breathable fabric as claimed in claim 1, wherein the reflective film or membrane comprises a moisture vapour permeable and air/gas permeable film.

3. A laminated breathable fabric as claimed in either of claims 1 or 2, wherein the reflective film or membrane comprises a microperforated or microporous metallised film.

4. A laminated breathable fabric as claimed in claim 3, wherein the microperforated or microporous metallised film comprises microperforations or micropores of around 0.1 mm to 15 mm in diameter.

5. A laminated breathable fabric as claimed in either of claims 3 or 4, wherein the microperforations or micropores have a size of around 0.1 mm to 1.0 mm.

6. A laminated breathable fabric as claimed in any of claims 3 to 5, wherein the miroperforations or micropores are around 0.6 mm in diameter.

7. A laminated breathable fabric as claimed in any of claims 3 to 6, wherein the microperforations or micropores have a surface coverage of around 2% to 10%.

8. A laminated breathable fabric as claimed in any of claims 3 to 7, wherein there are provided around 30 microperforated holes/inch^2.

9. A laminated breathable fabric as claimed in any preceding claim, wherein the reflective film or membrane comprises a polymeric material and a reflective material.

10. A laminated breathable fabric as claimed in claim 9, wherein the reflective material is capable of reflecting at least infra-red radiation and/or heat.

11. A laminated breathable fabric as claimed in any preceding claim, wherein the reflective film or membrane has an emissivity of about 0.1 to about 0.6.

12. A laminated breathable fabric as claimed in claim 11, wherein the reflective film or membrane has an emissivity of about 0.1 to about 0.3.

13. A laminated breathable fabric as claimed in any claim 9, wherein the reflective material substantially comprises a metal or metallic based material.

14. A laminated breathable fabric as claimed in claim 13, wherein the metal or metallic based material comprises aluminium or an alloy thereof.

15. A laminated breathable fabric as claimed in any preceding claim, wherein the reflective film or membrane comprises a single layer film or membrane or a multiple layer film or membrane.

16. A laminated breathable fabric as claimed in any preceding claim when dependent upon claim 9, wherein the reflective film or membrane comprises a three layer film or membrane, wherein a middle layer includes the reflective material.

17. A laminated breathable fabric as claimed in either of claims 15 or 16, wherein the reflective film or membrane is of an "AB" or "ABA" type, wherein "A" is a first polymeric material optionally including a UV stabiliser, and "B" is a second polymeric material including the reflective material.

18. A laminated breathable fabric as claimed in claim 9, or any of claims 10 to 17 when dependent upon claim 9, wherein the reflective material is provided as an additive to a polymeric material melt used to produce the reflective film or membrane.

19. A laminated breathable fabric as claimed in either of claims 15 or 16 when dependent upon claim 9, wherein the reflective film or membrane comprises a multiple layer film or membrane, wherein a middle layer comprises the reflective material deposited onto one of the layers.

20. A laminated breathable fabric as claimed in either of claims 15 or 16 when dependent upon claim 9, or claim 19, wherein the reflective film or membrane is of an "AC" or "ACA" type in which "A" is a first polymeric material, optionally including a UV stabilizer, and "C" is a reflective material deposited onto one of the first polymer material layers "A".

21. A laminated breathable fabric as claimed in claim 20, wherein the first polymeric layer "A" is around 10 μm to 30 μm in thickness.

22. A laminated breathable fabric as claimed in either of claims 20 or 21, wherein the reflective material layer "C" is around 10 nm to 100 nm thick.

23. A laminated breathable fabric as claimed in any of claims 19 to 22, wherein the reflective material layer is deposited by a deposition process such as vacuum vapour deposition or plasma deposition.

24. A laminated breathable fabric as claimed in claim 9, wherein the polymeric material(s) comprises one or more

additives selected from ultra-violet (UV) stabilisers, hydrophobic additives, flame retardants, pigments, colour pigments, and/or plasticisers.

25. A laminated breathable fabric as claimed in either of claims 9 or 24, wherein the polymeric material(s) is a thermoplastic polymer(s) selected from polypropylene, polyamide or polyester.

26. A laminated breathable fabric as claimed in any preceding claim, wherein the fabric comprises at least one breathable polymeric film or membrane layer and/or at least one filamentous polymeric fabric layer.

27. A laminated breathable fabric as claimed in claim 26, wherein the reflective film or membrane is laminated to the at least one breathable polymeric membrane or the reflective film or membrane is laminated to the at least one filamentous polymeric fabric layer.

28. A laminated breathable fabric as claimed in either of claims 26 to 28, wherein the laminated breathable fabric comprises the reflective film, a breathable polymeric membrane and a filamentous polymeric fabric layer comprising a spunbond layer, the film, membrane and spunbond layer being intermittently bonded to preserve the moisture vapour transmission properties thereof.

29. A laminated breathable fabric as claimed in claim 28, wherein a further spunbond layer is provided between the film and membrane, the further spunbond layer providing additional strength, the further spunbond layer containing an ultra-violet stabiliser and/or a hydrophobic additive, and the film, further spunbond layer, membrane and spunbond layer being intermittently bonded to preserve the moisture vapour transmission properties thereof.

30. A laminated breathable fabric as claimed in any preceding claim, wherein the laminated breathable fabric includes a woven fabric layer.

31. A laminated breathable fabric having as a layer thereof a metal or metallised film or membrane.

32. A breathable building or construction material comprising a laminated breathable fabric as claimed in any of claims 1 to 30 or claim 31.

33. A breathable building material as claimed in claim 32, wherein the breathable building material is adapted for use as a roofing underlay, a housewrap, a wall breather membrane, or for other construction uses such as a temporary cover or as a flooring material.

34. Use as a building or construction material of a laminated breathable fabric as claimed in any of claims 1 to 30 or claim 31.

35. A method of manufacturing a laminated breathable fabric comprising the steps of:

providing a reflective film;

providing a filamentous polymeric fabric; and

forming the reflective film and filamentous polymeric fabric into a laminated breathable fabric.

36. A method of manufacturing a laminated breathable fabric as claimed in claim 35, wherein the step of forming is carried out by calendering.

37. A method of manufacturing a laminated breathable fabric as claimed in claim 36, wherein the reflective film is a microperforated film such as an "AB", "ABA", "AC" or "ACA" construction, and the step of providing the film comprises the steps of forming the film and then microperforating the film.

38. A method of manufacturing a laminated breathable fabric comprising the steps of:

providing a metal or metallised film;

providing a filamentous polymeric fabric layer; and

forming the metal or metallised film and filamentous polymeric fabric into a laminated breathable fabric.

39. A building construction including a laminated breathable fabric as claimed in any of claims 1 to 30 or claim 31.

40. A building construction including a laminated breathable fabric as claimed in claim 39, wherein the building construction comprises: a roof, a tiled roof, a pitched roof, a timber frame, a cavity wall or a floor.

41. A building including a building construction as claimed in either of claims 39 or 40.

42. A laminated breathable fabric comprising at least one breathable polymeric film or membrane layer laminated to at least one filamentous polymeric fabric layer, wherein a reflective material is provided on the breathable polymeric film or membrane layer.

43. A laminated breathable fabric comprising at least one breathable polymeric film or membrane layer, laminated to at least one filamentous polymeric fabric layer, wherein a metallic material is provided on the breathable polymeric film or membrane layer.

44. A filamentous polymeric fabric, filaments of which comprise a polymeric material and a reflective material.

45. A filamentous polymeric fabric filaments of which comprise a polymeric material and a metallic material.

46. A woven polymeric fabric strands of which comprises a polymeric material and a reflective material.

47. A woven polymeric fabric strands of which comprise a polymeric material and a metallic material.

48. A fabric comprising:

a polymeric fabric comprising a polymeric material and a reflective material, or

a polymeric material layer having formed thereon a continuous breathable layer comprising or including a reflective material.

49. A fabric comprising:

a polymeric fabric comprising a polymeric material and a metallic material, or

a polymeric material layer having formed thereon a continuous breathable layer comprising or including a metallic material.

50. A laminated breathable fabric as hereinbefore described with reference to the accompanying drawings.

51. A breathable building or construction material as hereinbefore described with reference to the accompanying drawings.

52. Use as a building or construction material of a laminated breathable fabric as hereinbefore described with reference to the accompanying drawings.

53. A method of manufacturing a laminated breathable fabric as hereinbefore described with reference to the accompanying drawings.

54. A building construction including a laminated breathable fabric as hereinbefore described with reference to the accompanying drawings.

55. A building including a laminated breathable fabric as hereinbefore described with reference to the accompanying drawings.

The Patent Office

63

INVESTOR IN PEOPLE

Application No:	GB 0314282.5	**Examiner:**	Richard Gregson
Claims searched:	1-43, 48, 49, 50-55 in part	**Date of search:**	21 October 2003

Patents Act 1977 : Search Report under Section 17

Documents considered to be relevant:

Category	Relevant to claims	Identity of document and passage or figure of particular relevance	
X	1-3,9, 10-14,23-27,30-36,38-43,48,49 at least	EP 1331316 A1	(THERMAL ECONOMICS) - see diagrams, abstract and column 4, paragraphs 29-35 in particular.
X	1-3,9,10, 13-15,23, 24-27,30-36,39-43 48,49 at least.	US 4230057 A	(KURZ) - see diagrams, abstract and column 1, line 46 to column 2, line 45 in particular.
X	1-3,9,10 13,14,15, 22,23,25-28,31,35, 36-38,42 48,49 at least.	GB 2294426 A	(DERMOT) - see diagrams, abstract and page 3, line 5 to page 5, line 10 in particular.
X	1-3,9,10 13,14,15, 22,23,25-28,31,35, 36-38,42 48,49 at least.	WO 96/32252 A	(GORE) - see diagrams, abstract and page 3 ,line 35 to page 5, line 8 in particular.
X	1-3,9,10 13,14,15, 22,23,25-28,31,35-38,42,48, 49 at least.	US 4569874 A	(KUZNETZ) - see diagrams, abstract and column 3, line 60 to column 4, line 29 in particular.

Categories:

X	Document indicating lack of novelty or inventive step	A	Document indicating technological background and/or state of the art.
Y	Document indicating lack of inventive step if combined with one or more other documents of same category.	P	Document published on or after the declared priority date but before the filing date of this invention.
&	Member of the same patent family	E	Patent document published on or after, but with priority date earlier than, the filing date of this application.

Structural Wrap Exhibit 1012, Page 114
Structural Wrap v Stormseal, IPR2024-00084

The Patent Office

INVESTOR IN PEOPLE

Application No:	GB 0314282.5	**Examiner:**	Richard Gregson
Claims searched:	1-43, 48, 49, 50-55 in part	**Date of search:**	21 October 2003

Field of Search:

Search of GB, EP, WO & US patent documents classified in the following areas of the UKC[V]:

B5N

Worldwide search of patent documents classified in the following areas of the IPC[7] :

B32B : E04B : E04D

The following online and other databases have been used in the preparation of this search report :

EPODOC, WPI, JAPIO

Structural Wrap Exhibit 1012, Page 115
Structural Wrap v Stormseal, IPR2024-00084

PATENT COOPERATION TREATY

PCT

INTERNATIONAL SEARCH REPORT

(PCT Article 18 and Rules 43 and 44)

Applicant's or agent's file reference 095009	**FOR FURTHER ACTION**	see Form PCT/ISA/220 as well as, where applicable, item 5 below.
International application No. **PCT/AU2009/000685**	International filing date *(day/month/year)* 2 June 2009	(Earliest) Priority Date *(day/month/year)* 2 June 2008

Applicant

CASE FILE MANAGEMENT SYSTEMS PTY LTD et al

This international search report has been prepared by this International Searching Authority and is transmitted to the applicant according to Article 18. A copy is being transmitted to the International Bureau.

This international search report consists of a total of 5 sheets.

☐ It is also accompanied by a copy of each prior art document cited in this report.

1. **Basis of the report**

a. With regard to the **language,** the international search was carried out on the basis of:

☒ The international application in the language in which it was filed.

☐ A translation of the international application into , which is the language of a translation furnished for the purposes of international search (Rules 12.3(a) and 23.1(b)).

b. ☐ This international search report has been established taking into account the **rectification of an obvious mistake** authorized by or notified to this Authority under Rule 91 (Rule 43.6*bis*(a)).

c. ☐ With regard to any **nucleotide and/or amino acid sequence** disclosed in the international application, see Box No. I.

2. ☐ **Certain claims were found unsearchable** (See Box No. II).

3. ☒ **Unity of invention is lacking** (See Box No. III).

4. With regard to the **title,**

☒ the text is approved as submitted by the applicant.

☐ the text has been established by this Authority to read as follows:

5. With regard to the **abstract,**

☒ the text is approved as submitted by the applicant.

☐ the text has been established, according to Rule 38.2, by this Authority as it appears in Box No. IV. The applicant may, within one month from the date of mailing of this international search report, submit comments to this Authority.

6. With regard to the **drawings,**

a. the figure of the **drawings** to be published with the abstract is Figure No. 5

☒ as suggested by the applicant.

☐ as selected by this Authority, because the applicant failed to suggest a figure.

☐ as selected by this Authority, because this figure better characterizes the invention.

b. ☐ none of the figures is to be published with the abstract.

INTERNATIONAL SEARCH REPORT

International application No.
PCT/AU2009/000685

A. CLASSIFICATION OF SUBJECT MATTER

Int. Cl.

E04D 5/06 (2006.01)

According to International Patent Classification (IPC) or to both national classification and IPC

B. FIELDS SEARCHED

Minimum documentation searched (classification system followed by classification symbols)

Documentation searched other than minimum documentation to the extent that such documents are included in the fields searched

Electronic data base consulted during the international search (name of data base and, where practicable, search terms used)
EPODOC, WPI: E04G, E04B, E04F13/-, E04D and Keywords shrink or shrunk, heat or thermo or thermal, cover or protect, wrap or web or film or sheet or membrane or layer or barrier, assemble or form, ground, flashing, damaged, sarking

C. DOCUMENTS CONSIDERED TO BE RELEVANT

Category*	Citation of document, with indication, where appropriate, of the relevant passages	Relevant to claim No.
X Y	US 4769962 A (POHL ET AL) 13 September 1988 See figures 1 and 5 and column 3/lines 9-20, column 3/lines 43-50	1-14, 21, 22 4, 11
X Y	US 2005/0217202 A1 (CROOK) 6 October 2005 See figures 1-4 and paragraph 7, 8 and 25	1-14, 21-23, 25 15, 24
Y	US 6797218 B1 (BICKERSTAFF) 28 September 2004 See the figures and lines 52-55/column 1, column 5/claim 1	4, 11, 15, 24
A	AU 199466002 A1 (Patent No. 655571)(CSR LIMITED) 22 December 1994	

☐ Further documents are listed in the continuation of Box C ☒ See patent family annex

*. Special categories of cited documents:

"A" document defining the general state of the art which is not considered to be of particular relevance

"E" earlier application or patent but published on or after the international filing date

"L" document which may throw doubts on priority claim(s) or which is cited to establish the publication date of another citation or other special reason (as specified)

"O" document referring to an oral disclosure, use, exhibition or other means

"P" document published prior to the international filing date but later than the priority date claimed

"T" later document published after the international filing date or priority date and not in conflict with the application but cited to understand the principle or theory underlying the invention

"X" document of particular relevance; the claimed invention cannot be considered novel or cannot be considered to involve an inventive step when the document is taken alone

"Y" document of particular relevance; the claimed invention cannot be considered to involve an inventive step when the document is combined with one or more other such documents, such combination being obvious to a person skilled in the art

"&" document member of the same patent family

Date of the actual completion of the international search	Date of mailing of the international search report
20 July 2009	31 JUL 2009
Name and mailing address of the ISA/AU AUSTRALIAN PATENT OFFICE PO BOX 200, WODEN ACT 2606, AUSTRALIA E-mail address: pct@ipaustralia.gov.au Facsimile No. +61 2 6283 7999	Authorized officer **OWEN ANDREWS** AUSTRALIAN PATENT OFFICE (ISO 9001 Quality Certified Service) Telephone No : +61 2 6283 2885

Box No. II Observations where certain claims were found unsearchable (Continuation of item 2 of first sheet)

This international search report has not been established in respect of certain claims under Article 17(2)(a) for the following reasons:

1. ☐ Claims Nos.:
because they relate to subject matter not required to be searched by this Authority, namely:

2. ☐ Claims Nos.:
because they relate to parts of the international application that do not comply with the prescribed requirements to such an extent that no meaningful international search can be carried out, specifically:

3. ☐ Claims Nos.:
because they are dependent claims and are not drafted in accordance with the second and third sentences of Rule 6.4(a)

Box No. III Observations where unity of invention is lacking (Continuation of item 3 of first sheet)

This International Searching Authority found multiple inventions in this international application, as follows:

Please see Supplemental Box 1

1. ☐ As all required additional search fees were timely paid by the applicant, this international search report covers all searchable claims.
2. ☒ As all searchable claims could be searched without effort justifying additional fees, this Authority did not invite payment of additional fees.
3. ☐ As only some of the required additional search fees were timely paid by the applicant, this international search report covers only those claims for which fees were paid, specifically claims Nos.:
4. ☐ No required additional search fees were timely paid by the applicant. Consequently, this international search report is restricted to the invention first mentioned in the claims; it is covered by claims Nos.:

Remark on Protest

☐ The additional search fees were accompanied by the applicant's protest and, where applicable, the payment of a protest fee.

☐ The additional search fees were accompanied by the applicant's protest but the applicable protest fee was not paid within the time limit specified in the invitation.

☐ No protest accompanied the payment of additional search fees.

Supplemental Box 1
(To be used when the space in any of Boxes I to IV is not sufficient)

Continuation of Box No: III

This International Application does not comply with the requirements of unity of invention because it does not relate to one invention or to a group of inventions so linked as to form a single general inventive concept.

In assessing whether there is more than one invention claimed, I have given consideration to those features which can be considered to potentially distinguish the claimed combination of features from the prior art. Where different claims have different distinguishing features they define different inventions.

This International Searching Authority has found that there are different inventions as follows:

- Claims 1-14, 21, 22 are directed to a roof cover including a film of heat shrinkable material stretched over a damaged or uncompleted roof. It is considered that stretching a film of heat shrinkable material over a damaged or uncompleted roof comprises a first distinguishing feature.

- Claims 15-20, 24 are directed to a method of preparing a sheet of heat shrinkable material for protecting a roof structure including selecting a roll of heat shrink film, cutting a number of lengths, assembling lengths on the ground, positioning the assembled sheet over an area to be covered, affixing the sheet. It is considered that method of pre-assembling the sheets before applying to the roof structure comprises a second distinguishing feature.

- Claim 23 is directed to a method of protecting a roof structure including selecting a roll of heat shrinkable film, cutting a length of film, attaching a trailing edge, taking a leading edge to the opposite edge of the roof structure, attaching the leading edge to the opposite edge of the roof structure and applying heat to the film. It is considered that the method of placing the sheets on the roof structure comprises a third distinguishing feature.

- Claim 25-29 is directed to a method of applying a moisture proof building wrap to a structure including the steps of procuring a roll of heat shrinkable film, attaching an edge of the film to the structure and disposing an opposite leading edge horizontally across to an opposite side of said structure one or more times to form one or more horizontal bands and applying heat to the film. It is considered that the method of applying a horizontal band to a structure comprises a fourth distinguishing feature.

PCT Rule 13.2, first sentence, states that unity of invention is only fulfilled when there is a technical relationship among the claimed inventions involving one or more of the same or corresponding special technical features. PCT Rule 13.2, second sentence, defines a special technical feature as a feature which makes a contribution over the prior art. The only feature common to all of the claims is heat shrinkable film. However this concept is not novel in the light of:

US 4769962 A1 (POHL ET AL) 13 September 1988.

This means that the common feature can not constitute a special technical feature within the meaning of PCT Rule 13.2, second sentence, since it makes no contribution over the prior art. Because the common feature does not satisfy the requirement for being a special technical feature it follows that it cannot provide the necessary technical relationship between the identified inventions. Therefore the claims do not satisfy the requirement of unity of invention *a posteriori*.

INTERNATIONAL SEARCH REPORT

Information on patent family members

International application No.

PCT/AU2009/000685

This Annex lists the known "A" publication level patent family members relating to the patent documents cited in the above-mentioned international search report. The Australian Patent Office is in no way liable for these particulars which are merely given for the purpose of information.

Patent Document Cited in Search Report		Patent Family Member
US	4769962	NONE
US	2005217202	NONE
US	6797218	NONE
AU	199466002	NONE

Due to data integration issues this family listing may not include 10 digit Australian applications filed since May 2001.

END OF ANNEX

PATENT COOPERATION TREATY

From the INTERNATIONAL SEARCHING AUTHORITY

To:

Peter C DUMMER
Wallington-Dummer
GPO Box 3888
SYDNEY, NSW 2001

PCT

NOTIFICATION OF TRANSMITTAL OF THE INTERNATIONAL SEARCH REPORT AND THE WRITTEN OPINION OF THE INTERNATIONAL SEARCHING AUTHORITY, OR THE DECLARATION

(PCT Rule 44.1)

Date of mailing *(day/month/year)* 13 OCT 2010

Applicant's or agent's file reference
105002

FOR FURTHER ACTION See paragraphs 1 and 4 below

International application No.
PCT/AU2010/001026

International filing date
(day/month/year) 13 August 2010

Applicant
STORM HOLDING (AUST) PTY LTD et al

1. [X] The applicant is hereby notified that the international search report and the written opinion of the International Searching Authority have been established and are transmitted herewith.
Filing of amendments and statement under Article 19:
The applicant is entitled, if he so wishes, to amend the claims of the international application (see Rule 46):
When? The time limit for filing such amendments is normally two months from the date of transmittal of the international search report.
Where? Directly to the International Bureau of WIPO, 34 chemin des Colombettes 1211 Geneva 20, Switzerland, Facsimile No.: +41 22 338 82 70
For more detailed instructions, see *PCT Applicant's Guide*, International Phase, paragraphs 9.004 - 9.011.

2. [ ] The applicant is hereby notified that no international search report will be established and that the declaration under Article 17(2)(a) to that effect and the written opinion of the International Searching Authority are transmitted herewith.

3. [ ] **With regard to any protest** against payment of (an) additional fee(s) under Rule 40.2, the applicant is notified that:
   - [ ] the protest together with the decision thereon has been transmitted to the International Bureau together with the applicant's request to forward the texts of both the protest and the decision thereon to the designated Offices.
   - [ ] no decision has been made yet on the protest; the applicant will be notified as soon as a decision is made.

4. **Reminders**

The applicant may submit comments on an informal basis on the written opinion of the International Searching Authority to the International Bureau. The International Bureau will send a copy of such comments to all designated Offices unless an international preliminary examination report has been or is to be established. Following the expiration of 30 months from the priority date, these comments will also be made available to the public.

Shortly after the expiration of **18 months** from the priority date, the international application will be published by the International Bureau. If the applicant wishes to avoid or postpone publication, a notice of withdrawal of the international application, or of the priority claim, must reach the International Bureau before the completion of the technical preparations for international publication (Rules 90*bis*.1 and 90*bis*.3).

Within **19 months** from the priority date, but only in respect of some designated Offices, a demand for international preliminary examination must be filed if the applicant wishes to postpone the entry into the national phase **until 30 months** from the priority date (in some Offices even later); otherwise, the applicant must, **within 20 months** from the priority date, perform the prescribed acts for entry into the national phase before those designated Offices.

In respect of other designated Offices, the time limit of **30 months** (or later) will apply even if no demand is filed within 19 months.

For details about the applicable time limits, Office by Office, see www.wipo.int/pct/en/texts/time_limits.html and the *PCT Applicant's Guide*, National Chapters.

Name and mailing address of the ISA/AU

AUSTRALIAN PATENT OFFICE
PO BOX 200, WODEN ACT 2606, AUSTRALIA
E-mail address: pct@ipaustralia.gov.au
Facsimile No. +61 2 6283 7999

Authorized officer
RAJEEV DESHMUKH
AUSTRALIAN PATENT OFFICE
(ISO 9001 Quality Certified Service)
Telephone No. +61 3 9935 9622

PATENT COOPERATION TREATY

PCT

INTERNATIONAL SEARCH REPORT

(PCT Article 18 and Rules 43 and 44)

Applicant's or agent's file reference 105002	**FOR FURTHER ACTION**	see Form PCT/ISA/220 as well as, where applicable, item 5 below.
International application No. **PCT/AU2010/001026**	International filing date *(day/month/year)* 13 August 2010	(Earliest) Priority Date *(day/month/year)* 14 August 2009
Applicant STORM HOLDING (AUST) PTY LTD et al		

This international search report has been prepared by this International Searching Authority and is transmitted to the applicant according to Article 18. A copy is being transmitted to the International Bureau.

This international search report consists of a total of 4 sheets.

☐ It is also accompanied by a copy of each prior art document cited in this report.

1. **Basis of the report**

a. With regard to the **language**, the international search was carried out on the basis of:

☒ The international application in the language in which it was filed.

☐ A translation of the international application into . which is the language of a translation furnished for the purposes of international search (Rules 12.3(a) and 23.1(b)).

b. ☐ This international search report has been established taking into account the **rectification of an obvious mistake** authorized by or notified to this Authority under Rule 91 (Rule 43.6*bis*(a)).

c. ☐ With regard to any **nucleotide and/or amino acid sequence** disclosed in the international application, see Box No. I.

2. ☐ **Certain claims were found unsearchable** (See Box No. II).

3. ☐ **Unity of invention is lacking** (See Box No. III).

4. With regard to the **title**,

☒ the text is approved as submitted by the applicant.

☐ the text has been established by this Authority to read as follows:

5. With regard to the **abstract**,

☒ the text is approved as submitted by the applicant.

☐ the text has been established, according to Rule 38.2, by this Authority as it appears in Box No. IV. The applicant may, within one month from the date of mailing of this international search report, submit comments to this Authority.

6. With regard to the **drawings**,

a. the figure of the **drawings** to be published with the abstract is Figure No. **2**

☒ as suggested by the applicant.

☐ as selected by this Authority, because the applicant failed to suggest a figure.

☐ as selected by this Authority, because this figure better characterizes the invention.

b. ☐ none of the figures is to be published with the abstract.

INTERNATIONAL SEARCH REPORT

International application No.
PCT/AU2010/001026

A. CLASSIFICATION OF SUBJECT MATTER

Int. Cl.

E04B 1/74 (2006.01) *B32B 27/00* (2006.01)
E04D 5/10 (2006.01) *C23C 14/24* (2006.01)

According to International Patent Classification (IPC) or to both national classification and IPC

B. FIELDS SEARCHED

Minimum documentation searched (classification system followed by classification symbols)

Documentation searched other than minimum documentation to the extent that such documents are included in the fields searched

Electronic data base consulted during the international search (name of data base and, where practicable, search terms used)
WPI and EPODOC: heatshrink+, heat, shrink+, metal+, al, alumin+, metal[,]i[s,z]+, sarking, roof, wall, building, construction, fram+, repair+, damage+, film, sheet, roll, cladding, tarpaulin, weather, proof+, deposit+, evaporat+, vacuum, and similar terms

C. DOCUMENTS CONSIDERED TO BE RELEVANT

Category*	Citation of document, with indication, where appropriate, of the relevant passages	Relevant to claim No.
X	US 4,818,588 A (OKABE, M et al.) 4 April 1989 Abstract; column 1, lines 6 to 18; column 4, lines 15 to 26; column 5, lines 12 to 21; column 6, lines 4 to 23	23–24
X Y	EP 0 410 275 A1 (HOECHST AKTIENGESELLSCHAFT) 30 January 1991 Abstract; figure 3; column 1, lines 36 to 51 Abstract; figure 3; column 1, lines 36 to 51	1-6,8-12,15-17,20-22 7,13-14,18-19
Y	AU 2008202416 B1 (CASE FILE MANAGEMENT SYSTEMS PTY LTD) 18 September 2008 Page 7, lines 12 to 21; page 10, lines 19 to 26	7,13-14,18-19

[X] Further documents are listed in the continuation of Box C [X] See patent family annex

* Special categories of cited documents:
"A" document defining the general state of the art which is not considered to be of particular relevance
"E" earlier application or patent but published on or after the international filing date
"L" document which may throw doubts on priority claim(s) or which is cited to establish the publication date of another citation or other special reason (as specified)
"O" document referring to an oral disclosure, use, exhibition or other means
"P" document published prior to the international filing date but later than the priority date claimed
"T" later document published after the international filing date or priority date and not in conflict with the application but cited to understand the principle or theory underlying the invention
"X" document of particular relevance; the claimed invention cannot be considered novel or cannot be considered to involve an inventive step when the document is taken alone
"Y" document of particular relevance; the claimed invention cannot be considered to involve an inventive step when the document is combined with one or more other such documents, such combination being obvious to a person skilled in the art
"&" document member of the same patent family

Date of the actual completion of the international search	Date of mailing of the international search report
08 October 2010	13 OCT 2010
Name and mailing address of the ISA/AU AUSTRALIAN PATENT OFFICE PO BOX 200, WODEN ACT 2606, AUSTRALIA E-mail address: pct@ipaustralia.gov.au Facsimile No. +61 2 6283 7999	Authorized officer **RAJEEV DESHMUKH** AUSTRALIAN PATENT OFFICE (ISO 9001 Quality Certified Service) Telephone No : +61 3 9935 9622

C (Continuation). DOCUMENTS CONSIDERED TO BE RELEVANT

Category*	Citation of document, with indication, where appropriate, of the relevant passages	Relevant to claim No.
A	US 2008/0060302 A1 (BLETSOS, IV et al.) 13 March 2008 Abstract; paragraphs [0034], [0044], [0047]	
A	GB 2 388 815 A (DON & LOW LTD.) 26 November 2003 Page 15, lines 3 to 12; page 16, lines 3 to 30	
A	GB 2 376 206 A (BRITISH SISALKRAFT LIMITED) 11 December 2002 Abstract	
A	US 6,632,496 B1 (JOHNSON, MRC et al.) 14 October 2003 Column 3, lines 26 to 42; claims 1, 7–9	
A	US 2008/0022620 A1 (CROWLEY, S) 31 January 2008 Figure 3; paragraphs [0034]–[0035]	

This Annex lists the known "A" publication level patent family members relating to the patent documents cited in the above-mentioned international search report. The Australian Patent Office is in no way liable for these particulars which are merely given for the purpose of information.

Patent Document Cited in Search Report		Patent Family Member					
US	4818588	DE	3639681	GB	2184672	JP	63011332
		JP	62157219U	JP	62119859		
EP	0410275	DE	8909045U				
AU	2008202416	AU	2008101060	AU	2008203409	AU	2009200232
		WO	2009146487				
US	2008060302	BR	PI0515220	CN	101044283	EP	1789622
		US	2006040091	US	2008057292	US	2008187740
		US	2010247855	WO	2006024013		
GB	2388815	EP	1400348				
GB	2376206	NONE					
US	6632496	US	6730254				
US	2008022620	WO	2008002934				

Due to data integration issues this family listing may not include 10 digit Australian applications filed since May 2001.

END OF ANNEX

PATENT COOPERATION TREATY

From the:
INTERNATIONAL SEARCHING AUTHORITY

To:

Peter C DUMMER
Wallington-Dummer
GPO Box 3888
SYDNEY, NSW 2001

PCT

WRITTEN OPINION OF THE
INTERNATIONAL SEARCHING AUTHORITY

(PCT Rule 43*bis*.1)

Date of mailing *(day/month/year)* 13 OCT 2010

Applicant's or agent's file reference
105002

FOR FURTHER ACTION
See paragraph 2 below

International application No.	International filing date *(day/month/year)*	Priority date *(day/month/year)*
PCT/AU2010/001026	13 August 2010	14 August 2009

International Patent Classification (IPC) or both national classification and IPC

Int. Cl.

E04B 1/74 (2006.01) *B32B 27/00* (2006.01)
E04D 5/10 (2006.01) *C23C 14/24* (2006.01)

Applicant

STORM HOLDING (AUST) PTY LTD et al

1. This opinion contains indications relating to the following items:

- [X] Box No. I — Basis of the opinion
- [ ] Box No. II — Priority
- [ ] Box No. III — Non-establishment of opinion with regard to novelty, inventive step and industrial applicability
- [ ] Box No. IV — Lack of unity of invention
- [X] Box No. V — Reasoned statement under Rule 43*bis*.1(a)(i) with regard to novelty, inventive step and industrial applicability; citations and explanations supporting such statement
- [ ] Box No. VI — Certain documents cited
- [ ] Box No. VII — Certain defects in the international application
- [X] Box No. VIII — Certain observations on the international application

2. **FURTHER ACTION**

If a demand for international preliminary examination is made, this opinion will be considered to be a written opinion of the International Preliminary Examining Authority ("IPEA") except that this does not apply where the applicant chooses an Authority other than this one to be the IPEA and the chosen IPEA has notified the International Bureau under Rule 66.1*bis*(b) that written opinions of this International Searching Authority will not be so considered.

If this opinion is, as provided above, considered to be a written opinion of the IPEA, the applicant is invited to submit to the IPEA a written reply together, where appropriate, with amendments, before the expiration of 3 months from the date of mailing of Form PCT/ISA/220 or before the expiration of 22 months from the priority date, whichever expires later.

For further options, see Form PCT/ISA/220.

3. For further details, see notes to Form PCT/ISA/220.

Name and mailing address of the ISA	Date of completion of this opinion	Authorized Officer
AUSTRALIAN PATENT OFFICE PO BOX 200, WODEN ACT 2606, AUSTRALIA E-mail address: pct@ipaustralia.gov.au Facsimile No. +61 2 6283 7999	08 October 2010	**RAJEEV DESHMUKH** AUSTRALIAN PATENT OFFICE (ISO 9001 Quality Certified Service) Telephone No. +61 3 9935 9622

WRITTEN OPINION OF THE INTERNATIONAL SEARCHING AUTHORITY

International application No.

PCT/AU2010/001026

Box No. I Basis of this opinion

1. With regard to the **language**, this opinion has been established on the basis of:

   [X] The international application in the language in which it was filed

   [ ] A translation of the international application into, , which is the language of a translation furnished for the purposes of international search (under Rules 12.3(a) and 23.1(b)).

2. [ ] This opinion has been established taking into account **the rectification of an obvious mistake** authorized by or notified to this Authority under Rule 91 (Rule 43*bis*.1(a))

3. With regard to any **nucleotide and/or amino acid sequence** disclosed in the international application, this opinion has been established on the basis of a sequence listing filed or furnished:

   a. (means)

   [ ] on paper

   [ ] in electronic form

   b. (time)

   [ ] in the international application as filed

   [ ] together with the international application in electronic form

   [ ] subsequently to this Authority for the purposes of search

4. [ ] In addition, in the case that more than one version or copy of a sequence listing has been filed or furnished, the required statements that the information in the subsequent or additional copies is identical to that in the application as filed or does not go beyond the application as filed, as appropriate, were furnished.

5. Additional comments:

Box No. V **Reasoned statement under Rule 43*bis*.1(a)(i) with regard to novelty, inventive step or industrial applicability; citations and explanations supporting such statement**

1. Statement

Novelty (N)	Claims	**4, 7, 13–14, 18–19**	**YES**
	Claims	**1–3, 5–6, 8–12, 15–17, 20–24**	**NO**
Inventive step (IS)	Claims	**NONE**	**YES**
	Claims	**1–24**	**NO**
Industrial applicability (IA)	Claims	**1–24**	**YES**
	Claims	**NONE**	**NO**

2. Citations and explanations:

US 2008/0060302 A1 (BLETSOS, IV et al.) 13 March 2008. BLETSOS (abstract) discloses a composite sheet material is suitable for use as a building construction wrap such as roof lining and house wrap. The metallized composite sheet is formed by coating a moisture vapour permeable sheet with at least one metal layer and at least one outer organic coating layer. Paragraph [0034] discloses that sheets used in the construction industry are typically formed from polyolefins such as polypropylene or high density polyethylene, polyesters, or polyamides. Paragraph [0044] states that vacuum vapour deposition methods known in the art are preferred for depositing the metal and organic coatings. Paragraph [0047] states that suitable compositions for the organic coating layer(s) include polyacrylate polymers and oligomers. Even though the sheet material appears to be quite similar to that claimed in the present claims, BLETSOS does not disclose the sheet material to be heat shrinkable. Thermoplastic polymers such as polyolefins are eminently suitable and are very widely used for making heat shrinkable films (by heating and stretching the film, and cooling it while stretched; such film will recover i.e. shrink on reheating). However BLETSOS does not make any reference to stretching, recovery, or shrinkability and is therefore considered to be a document defining the general state of the art which is not considered to be of particular relevance.

GB 2 388 815 A (DON & LOW LTD.) 26 November 2003. DON & LOW discloses fabrics or materials that may find particularly beneficial application as construction fabrics, such as in the building industry, e.g. as house-wrap or as roofing underlay or in flooring. DON & LOW (page 15, lines 3 to 12) discloses that *"The membrane may comprise a polymeric material and a reflective material. Preferably the reflective material is capable of reflecting at least infra-red radiation and/or heat. Preferably the reflective film or membrane has an emissivity of about 0.1 to about 0.6, and preferably about 0.1 to about 0.3. The reflective material may substantially comprise a metal or metallic based material, e.g. aluminium or an alloy thereof."* DON & LOW (page 16, lines 3 to 30) further discloses that *"As another alternative, the reflective membrane may comprise a multiple layer membrane, e.g. a three layer membrane wherein a middle layer comprises the reflective material deposited onto one of the layers. For example, the membrane may be of an "AC" or "ACA" type in which "A" is a first polymeric material, advantageously including a UV stabilizer, and "C" is a reflective material deposited onto one of the first polymer material layers "A". The first polymeric layer "A" may be around 10 μm to 30 μm in thickness, and preferably around 15 μm thick. The reflective material "C" may be around 10 nm to 100 nm thick, and preferably around 40 nm thick. The reflective material may be deposited by a deposition process, e.g. vacuum vapour deposition or plasma deposition. The polymeric material(s) may comprise one or more additives such as ultra-violet (W) stabilizers, hydrophobic additives, flame retardants, pigments (e.g. colour pigments), and/or plasticizers. The polymeric material(s) may be a thermoplastic polymer(s), e.g. selected from polypropylene, polyamide or polyester. The fabric may also comprise at least one breathable polymeric film or membrane layer, and/or at least one filamentous polymeric fabric layer. Advantageously, in one embodiment the reflective film may be laminated to the at least one breathable polymeric membrane."* Even though the membrane appears to be quite similar to that claimed in the present claims, DON & LOW does not disclose the membrane to be heat shrinkable, and is therefore considered to be a document defining the general state of the art which is not considered to be of particular relevance.

... continued in Supplemental Box 1

Box No. VIII Certain observations on the international application

The following observations on the clarity of the claims, description, and drawings or on the question whether the claims are fully supported by the description, are made:

1. The statement of the claims as a whole are not clear. Independent claim 1 defines a deposited metallic reflective layer, but the method of independent claim 15 is silent about "depositing" a metallic layer, and independent claim 23 is silent about the layer of vapour deposited metal being reflective. On the other hand, independent claim 13 defines a top coat protecting a layer of vapour deposited layer but the independent claim s 1 and 15 are silent about a top coat. Independent claim 1 refers to a film "for weatherproofing" but independent claims 15 and 23 make no reference to weatherproofing.
2. Claims 1 to 14 and 23 to 24 are product claims but are not clear because they are defined by intended purpose of the product (e.g. adapted for weather proofing, adapted for heat insulation, located between ..., adapted for packaging), or by method of manufacturing the product (e.g. provided with a deposited metallic reflective layer, a protective top layer is applied over said metallic reflective layer, heat applied to said film subsequent to fixing to said building shrinks the film). Such claims would have been clearer had they been drafted as method claims, or as product claims defined by features of the product itself.

Supplemental Box 1

In case **the space in any of the preceding boxes is not sufficient.**

Continuation of: Box No. V

GB 2 376 206 A (BRITISH SISALKRAFT LIMITED) 11 December 2002 discloses a cavity wall lining sheet comprising a vacuum formed bubble sheet laminated to a metal foil. The metal foil may comprise aluminium, with a polyethylene or lacquer corrosion resistant coating (abstract). BRITISH SISALKRAFT is considered to be a document defining the general state of the art which is not considered to be of particular relevance.

US 6,632,496 B1 (JOHNSON, MRC et al.) 14 October 2003 (column 3, lines 26 to 42, and claims 1, 7–9) discloses a metallised heat shrinkable polymer film 40, the film including a layer of vapour deposited metal and inner layer 30. The inner layer 30 is not considered to be a "top coat" because the two layers 40 and 30 are brought into close proximity only after heat shrinking. JOHNSON is considered to be a document defining the general state of the art which is not considered to be of particular relevance.

US 2008/0022620 A1 (CROWLEY, S) 31 January 2008 discloses a flexible weather resistant building wrap having multiple layers (including a metallized polymeric layer, e.g. polyester metallized with aluminium). Figure 3 and paragraphs [0034]–[0035] disclose a metallized polymeric layer 19,20 joined to a polyethylene foam layer 22 by means of an adhesive layer 21. CROWLEY dos not disclose that the wrap is heat shrinkable. CROWLEY is considered to be a document defining the general state of the art which is not considered to be of particular relevance.

NOVELTY (N)

US 4,818,588 A (OKABE, M et al.) 4 April 1989. OKABE discloses a metallised heat-shrinkable polymer film (abstract; column 4, lines 15 to 26); said film including a layer of vapour deposited metal (column 5, lines 12 to 21) and a top coat protecting said layer (column 6, lines 4 to 24); said film adapted for packaging of items (abstract) subject to detrimental effect of light and/or heat (column 1, lines 6 to 18). The film includes an externally applied, non electrically conductive coating thereby to render the film non electrically conductive (column 6, lines 4 to 24). Therefore the subject matter of claims 23 and 24 is not new and does not meet the requirements of Article 33(2) of the PCT with regard to novelty.

EP 0 410 275 A1 (HOECHST AKTIENGESELLSCHAFT) 30 January 1991. HOECHST (abstract) discloses a damp-proof sheet for the sealing of buildings having a barrier layer for water and water vapour. The damp-proof sheet contains at least one biaxially stretch-oriented and heat-set sheet of thermoplastic material which is metallised on at least one side. In addition, a method of preventing the ingress of moisture into heat insulating layers of buildings is described. In this method, a biaxially stretch-oriented, heat-set sheet of thermoplastic material which is metallised on at least one side is arranged between the masonry or the outer facing of the building and the heat insulating material to be protected. Figure 3 shows the biaxially stretch-oriented and heat-set plastic foil 1, the metallization 2, and the covering layer 3. According to column 1, lines 36 to 51, *"In principle all plastics which can be converted to biaxial oriented films are suitable as thermoplastic resin. Examples for this are polyolefins, polystyrene, polyamides, polyvinyl chloride or polyester. Preferred ones in the scope of the invention are polyolefins, in particular polypropylenes, and polyesters, in particular polyethylene terephthalate. As a metallization, an ultra-thin metal coating of a surface is to be understood to be within the scope of the invention, which is usually generated by metal evaporation in the vacuum. The thickness of the metallization is appropriate within the range of 20 to 200 Nm, when zinc, aluminium, iron, chromium, nickel and others are used as metals, wherein aluminium is preferred. In a preferable embodiment of the sealing sheet according to invention the metallization is protected by an additional plastic layer against mechanical damage, arranged on the free surface of the metallization. This protective layer can consist of polyethylene, polypropylene or of polyester. It can be applied by gluing on or by extrusion. If the sealing sheet according to invention for the roof cover it can be used alone or be combined with a bitumen layer combined."*

... continued in Supplemental Box 2

Supplemental Box 2

In case **the space in any of the preceding boxes is not sufficient.**

Continuation of: Supplemental Box 1

It is considered that a metallized aluminium layer would be inherently reflective; the externally applied *"additional plastics layer"* consisting possibly of *"polyethylene, polypropylene or of polyester"* would be inherently electrically non-conductive, thereby rendering the film electrically non-conductive; and the biaxially stretch-oriented thermoplastic films are inherently heat shrinkable. It is also considered that the *"metal evaporation in the vacuum"* referred to in HOECHST inherently discloses the process steps of claim 16 which are conventional. Therefore the subject matter of claims 1–3, 5–6, 8–12, 15–17 and 20–22 is not new and does not meet the requirements of Article 33(2) of the PCT with regard to novelty.

Claims 4, 7, 13–14 and 18–19 are considered to be novel because the cited prior art does not disclose features of electron beam deposition (claim 4), low-density polyethylene film (claim 7), damaged portion of a building (claims 13, 18 and 19), or heat shrinking of the film into close conformity with surfaces defined by the framing (claim 14). Therefore the subject matter of these claims is new and meets the requirements of Article 33(2) of the PCT with regard to novelty.

INVENTIVE STEP (IS)

Claims 1–3, 5–6, 8–12, 15–17 and 20–24 also lack an inventive step for the reasons given above. An invention is necessarily obvious in the light of its disclosure. Therefore the subject matter of claims 1–3, 5–6, 8–12, 15–17 and 20–24 is obvious and does not meet the requirements of Article 33(3) of the PCT with regard to inventive step.

It is considered that electron beam deposition as claimed in claim 4 is an obvious alternative to evaporative deposition disclosed in HOECHST. Therefore the subject matter of claim 4 is obvious and does not meet the requirements of Article 33(3) of the PCT with regard to inventive step.

AU 2008202416 B1 (CASE FILE MANAGEMENT SYSTEMS PTY LTD) 18 September 2008. CASE FILE MANAGEMENT (page 7, lines 12 to 21) discloses a roof cover system and a method for covering a damaged or uncompleted roof of a building. The system uses a heat shrinkable film, preferably a low-density polyethylyne. The film is preferably between 0.6 and 0.7 mm in thickness and is provided in rolls of various widths and lengths. In at least one preferred form of the film, it is provided with a heat reflective surface. Page 10 (lines 19 to 26) discloses that the heat shrinkable film 18 is provided with a heat reflective upper surface 32 so that the film 18 forms a permanent sarking layer beneath the roofing cladding, thus acting to protect the timberwork of a building prior to construction and to provide a replacement for conventional reflective sarking. CASE FILE MANAGEMENT discloses the features of claims 7 (page 5, lines 12 to 13), 13–14 and 18–19 (page 5, lines 2 to 4) and claim 14 (page 9, lines 4 to 15). It would be obvious to a person skilled in the art to combine the teachings of HOECHST and CASE FILE MANAGEMENT to arrive at the invention as claimed in claims 7, 13–14, 18–19 because both the cited documents are in the same technical field and are directed to the same technical problem (weather-proofing a building and providing a thermal barrier). Therefore the subject matter of claims 7, 13–14, 18–19 is obvious and does not meet the requirements of Article 33(3) of the PCT with regard to inventive step.

INDUSTRIAL APPLICABILITY (IA)

The claimed invention relates to a protective reflective film for insulation from light and heat energy transmission, and more particularly to a heat shrinkable film with these properties. The film may be made by or used in industry. Therefore the subject matter of these claims is new and meets the requirements of Article 33(2) of the PCT with regard to novelty.

Electronic Acknowledgement Receipt

EFS ID:	46925635
Application Number:	17977136
International Application Number:	
Confirmation Number:	7315
Title of Invention:	ROOF AND WALL COVER SYSTEM
First Named Inventor/Applicant Name:	Matthew LENNOX
Customer Number:	130554
Filer:	Kevin McDermott
Filer Authorized By:	
Attorney Docket Number:	2021_01B
Receipt Date:	31-OCT-2022
Filing Date:	
Time Stamp:	13:23:31
Application Type:	Utility under 35 USC 111(a)

Payment information:

Submitted with Payment	no

File Listing:

Document Number	Document Description	File Name	File Size(Bytes)/ Message Digest	Multi Part /.zip	Pages (if appl.)
1	Foreign Reference	AU-2008-202416.pdf	416853 7f99a26493f0697c967e3aafb5c0f25b2a51b27c	no	19

Warnings:

Information:					
2	Foreign Reference	AU-199466002.pdf	23853 edeae24e2bea2fc8e51152a8e543da1300fba35e	no	2
Warnings:					
Information:					
3	Foreign Reference	English-translation-of-EP-0410275.pdf	52357 40d98a603047c88725499c457aff980ac2dabaa5	no	1
Warnings:					
Information:					
4	Foreign Reference	EP-0410275.pdf	197922 5e392b37fea487aa1d9033a8b4439b204049d5a3	no	5
Warnings:					
Information:					
5	Foreign Reference	GB-2376206.pdf	383591 89329dfa9efdf32280dc8cbe34d3473e03cb080a	no	13
Warnings:					
Information:					
6	Foreign Reference	GB-32388815.pdf	2139994 12ccc059e181956b4bcc81e987c0bb291cb7bd56	no	75
Warnings:					
Information:					
7	Non Patent Literature	Intl-search-report-PCT-AU2009-000685.pdf	241809 8989fb93c8cc4e49eba1be13d0101b006143ee00	no	5
Warnings:					
Information:					
8	Non Patent Literature	Intl-search-report-PCT-AU2010-001026.pdf	373816 7a92f7253f9305e9497756d5c3b11bf93fdb0310	no	5
Warnings:					
Information:					

9	Non Patent Literature	Written-Opinion.pdf	627792 b1ff012378564c0146e1ceb21b7e8718328d09db	no	6
Warnings:					
Information:					
			Total Files Size (in bytes):	4457987	

This Acknowledgement Receipt evidences receipt on the noted date by the USPTO of the indicated documents, characterized by the applicant, and including page counts, where applicable. It serves as evidence of receipt similar to a Post Card, as described in MPEP 503.

New Applications Under 35 U.S.C. 111
If a new application is being filed and the application includes the necessary components for a filing date (see 37 CFR 1.53(b)-(d) and MPEP 506), a Filing Receipt (37 CFR 1.54) will be issued in due course and the date shown on this Acknowledgement Receipt will establish the filing date of the application.
National Stage of an International Application under 35 U.S.C. 371
If a timely submission to enter the national stage of an international application is compliant with the conditions of 35 U.S.C. 371 and other applicable requirements a Form PCT/DO/EO/903 indicating acceptance of the application as a national stage submission under 35 U.S.C. 371 will be issued in addition to the Filing Receipt, in due course.
New International Application Filed with the USPTO as a Receiving Office
If a new international application is being filed and the international application includes the necessary components for an international filing date (see PCT Article 11 and MPEP 1810), a Notification of the International Application Number and of the International Filing Date (Form PCT/RO/105) will be issued in due course, subject to prescriptions concerning national security, and the date shown on this Acknowledgement Receipt will establish the international filing date of the application.

Electronic Patent Application Fee Transmittal

Application Number:	
Filing Date:	
Title of Invention:	ROOF AND WALL COVER SYSTEM
First Named Inventor/Applicant Name:	Matthew LENNOX
Filer:	Kevin McDermott
Attorney Docket Number:	2021_01B

Filed as Small Entity

Filing Fees for Track I Prioritized Examination - Nonprovisional Application under 35 USC 111(a)

Description	Fee Code	Quantity	Amount	Sub-Total in USD($)
Basic Filing:				
UTILITY FILING FEE (ELECTRONIC FILING)	4011	1	80	80
UTILITY SEARCH FEE	2111	1	350	350
UTILITY EXAMINATION FEE	2311	1	400	400
REQUEST FOR PRIORITIZED EXAMINATION	2817	1	2100	2100
Pages:				
Claims:				
Miscellaneous-Filing:				
PROCESSING FEE, EXCEPT PROV. APPLS.	2830	1	70	70

Description	Fee Code	Quantity	Amount	Sub-Total in USD($)
Petition:				
Patent-Appeals-and-Interference:				
Post-Allowance-and-Post-Issuance:				
Extension-of-Time:				
Miscellaneous:				
			Total in USD ($)	**3000**

Electronic Acknowledgement Receipt

EFS ID:	46925567
Application Number:	17977136
International Application Number:	
Confirmation Number:	7315
Title of Invention:	ROOF AND WALL COVER SYSTEM
First Named Inventor/Applicant Name:	Matthew LENNOX
Customer Number:	130554
Filer:	Kevin McDermott
Filer Authorized By:	
Attorney Docket Number:	2021_01B
Receipt Date:	31-OCT-2022
Filing Date:	
Time Stamp:	13:17:47
Application Type:	Utility under 35 USC 111(a)

Payment information:

Submitted with Payment	yes
Payment Type	CARD
Payment was successfully received in RAM	$3000
RAM confirmation Number	E20220UD18091941
Deposit Account	
Authorized User	

The Director of the USPTO is hereby authorized to charge indicated fees and credit any overpayment as follows:

File Listing:

Document Number	Document Description	File Name	File Size(Bytes)/ Message Digest	Multi Part /.zip	Pages (if appl.)
1		Original-CIP-application.pdf	267997 21ef99aec9662f2d9cafd7418625cba296837701	yes	44
	Multipart Description/PDF files in .zip description				
	Document Description		**Start**	**End**	
	Specification		1	38	
	Claims		39	43	
	Abstract		44	44	
Warnings:					
Information:					
2	Drawings-only black and white line drawings	Drawings.pdf	427436 1046b63a38a7bedab5dfe798c1933c8774f1a3b0	no	15
Warnings:					
Information:					
3	Oath or Declaration filed	Dec-1.PDF	383631 b07c92c1339a93d539be2b18d151d265c29b6ab1	no	3
Warnings:					
Information:					
4	Oath or Declaration filed	Dec-2.PDF	367476 317547f8ffa9e6f9aa1eb9f4eea49fee7a7e4564	no	2
Warnings:					
Information:					
5	Oath or Declaration filed	Dec-3.PDF	383310 7d4a421849c73308413c9d9234e2ce3174c37872	no	3

Warnings:					
Information:					
6	Oath or Declaration filed	Dec-4-Matt-LENNOX-for-CIP.pdf	167581 228b1d4973f42a398f9169c2463fcf3ba8301d8b	no	2
Warnings:					
Information:					
7	Power of Attorney	POA-Executed-by-Lennox-FOR-ROOF-AND-WALL-COVER-SYSTEM.pdf	246640 cf671e2667c23fc3df4478d8426922a03ff82998	no	4
Warnings:					
Information:					
8	Power of Attorney	POA-exeucted-by-LENNOX-for-CIP.pdf	309892 f7d41ec0db5dc709799da147c298040c34933ae7	no	4
Warnings:					
Information:					
9	Application Data Sheet	aia0014.pdf	1823882 f1f2b5d13f905fc1f7f579655b89997b1bee6d0d	no	9
Warnings:					
Information:					
10	Information Disclosure Statement (IDS) Form (SB08)	SB-08-For-Filing.pdf	281152 82311322e46c606f7671835c8aa0f4b6752e61a4	no	2
Warnings:					
Information:					
This is not an USPTO supplied IDS fillable form					
11	Transmittal Letter	IDS-Transmittal-for-filing.pdf	84552 702f65b6fe626352923a7f4cd3dd1cb8c0a57b02	no	3
Warnings:					
Information:					
12	Track One Request	aia0424.pdf	134460 db85320a743e8882de0d4c63051e06e4ab0cc696	no	2
Warnings:					

Information:					
13	Preliminary Amendment	Preliminary-Amendment.pdf	83973 95c86aabdf3c63ef124c80db6d1eccdf75e4799f	no	8
Warnings:					
Information:					
14	Fee Worksheet (SB06)	fee-info.pdf	48297 18ecde367df4564dc83fced0f560a5cff64a643d	no	2
Warnings:					
Information:					
			Total Files Size (in bytes):	5010279	

This Acknowledgement Receipt evidences receipt on the noted date by the USPTO of the indicated documents, characterized by the applicant, and including page counts, where applicable. It serves as evidence of receipt similar to a Post Card, as described in MPEP 503.

New Applications Under 35 U.S.C. 111
If a new application is being filed and the application includes the necessary components for a filing date (see 37 CFR 1.53(b)-(d) and MPEP 506), a Filing Receipt (37 CFR 1.54) will be issued in due course and the date shown on this Acknowledgement Receipt will establish the filing date of the application.
National Stage of an International Application under 35 U.S.C. 371
If a timely submission to enter the national stage of an international application is compliant with the conditions of 35 U.S.C. 371 and other applicable requirements a Form PCT/DO/EO/903 indicating acceptance of the application as a national stage submission under 35 U.S.C. 371 will be issued in addition to the Filing Receipt, in due course.
New International Application Filed with the USPTO as a Receiving Office
If a new international application is being filed and the international application includes the necessary components for an international filing date (see PCT Article 11 and MPEP 1810), a Notification of the International Application Number and of the International Filing Date (Form PCT/RO/105) will be issued in due course, subject to prescriptions concerning national security, and the date shown on this Acknowledgement Receipt will establish the international filing date of the application.

HEAT SHRINK COVERING OF BUILT STRUCTURES AND METHOD

[0001] The present invention relates to protective covering of roofs and walls of built structures by polymer sheeting and, more particularly, to the temporary covering of damaged or under construction roofs, or as permanent sarking under roof covering or wall cladding.

BACKGROUND

[0002] The use of polymer sheeting for the protection of damaged roofs, or for weatherproofing buildings under construction, is known and was described for example in AU2009200232 and PCT/AU2009/000685 by the present inventor and the text of which is incorporated in this specification.

[0003] US6425213 (cited against an applicant's US application 12/995966) also describes a system of wrapping a building in a water impermeable layer but relies on the application of successive overlapping strips which are not secured one to another and would be liable to dislodgement in high wind conditions, and moreover is not for the repair of damaged roofs but as proofing against flooding.

[0004] Roofs are of course susceptible to damage from high winds, rain or hail. Tiled roofs for example may have a considerable area of tiles either damaged from hail impact, or dislodged completely as the result of high intensity storms. Shingled roofs are liable to be similarly damaged, and even metal sheeted roofs may suffer partial or total removal of one or more sheets. Damage to roofs may also be caused by the impact of falling trees, large branches, or other objects made airborne under high wind conditions.

[0005] Storm or impact damage cannot usually be immediately repaired so that to prevent further or potential damage to the interior of the building, temporary covering must be provided. Typically canvas (or similar material) tarpaulins are placed

over the damaged part of the roof and secured to the structure by ropes.

[0006] One disadvantage of this method of temporary covering is the difficulty of adequately securing a tarpaulin to the roof so that they remain very vulnerable to dislodgement should high winds prevail or recur and often require continuing attention and adjustment. Moreover, they are heavy and awkward to position, posing occupational health and safety issues. A further disadvantage is that they are expensive to acquire and bulky to store, and if the many roofs are damaged in one storm event, the number of tarpaulins available may be inadequate.

[0007] Buildings under construction, particularly timber framed, brick clad dwellings, are frequently constructed in a sequence where the timber frame, including that of the roof, is completed a considerable time before the roof cladding can be added. A disadvantage of this construction technique is that during this period the timber of the structure, which may even include timber or particle board flooring, is liable to deterioration from water and sun. A further disadvantage of this sequence of construction is that, if rain intervenes at the time further internal work is scheduled, the lack of roof covering may cause considerable delay and financial loss.

[0008] A system of covering a roof with a film of material for the purpose of preventing damage from wind shear was disclosed in US 2005/0217202, although again this is therefore not directed at the covering after storm damage. Moreover this US application teaches a method of application of the film from a roll of film hoisted up onto the roof surface, the film being unrolled in situ with overlapping edges of the film being secured by the application of adhesive tape. Rolls of film are heavy and in practice the manipulation of a roll of film and the edge taping required on even an intact roof surface is extremely difficult, if not dangerous and is completely impractical for application to the roof framing of an uncompleted building.

[0009] It is known for both damaged roofs and uncompleted framed roofs, to prepare sufficiently assembled strips of film at ground level for subsequent application to the roof, as disclosed in the present applicant's patent AU2008203409. In practice however, it has been found that the sealing of an extensively damaged roof, or the covering of a roof still under construction by a continuous sheet of film material, can lead to unacceptable stress at the seams and attached edges of the sheet. This stress is due to wind action both passing over the sheet surface, and acting on the sheet from below.

[00010] A further problem, not previously addressed, is that even at ground level, the assembly of a number or adjoining sheets of polymer film into a sheet large enough to cover a roof, especially in the case of storm damage, wind conditions make the control of adjoining sheets extremely difficult. US4872941 discloses a system for assembling by welding horizontally overlapping sheets of thermoplastic, but this involves a large, cumbersome wheeled machine which travels over the sheets. Another overlap welding arrangement is disclosed in US3257257 which again involves the use of a welding machine travelling along the overlap between adjacent sheets. Apart from the relatively complicated machine, the system relies on a well-defined trench built into a supporting surface for accommodating a conveyor belt system and is thus completely unsuited to on site use.

[00011] There is thus a need for simple, readily portable but efficient equipment to control overlapping sheets laid out on a ground surface at the site of application. In particular, for heat welding to provided consistent and strong joints, that simple equipment must provide for a controlled application of heat to the overlap portions of adjoining sheets applied at a predetermined rate.

[00012] There is also a need to affix thin polymer sheeting to damaged roofs and uncompleted framed roofs so as to resist lifting forces imparted by wind.

[00013] It is an object of the present invention to address or at least ameliorate some of the above disadvantages.

Notes

[00014] The term "comprising" (and grammatical variations thereof) is used in this specification in the inclusive sense of "having" or "including", and not in the exclusive sense of "consisting only of".

[00015] The above discussion of the prior art in the Background of the invention, is not an admission that any information discussed therein is citable prior art or part of the common general knowledge of persons skilled in the art in any country.

BRIEF DESCRIPTION OF INVENTION

[00016] According to one broad from of the invention there is provided a system for providing covers over at least a portion of a surface area of a built structure; the system including a film of polymer material stretching over the surface area of the built structure; the film formed as a sheet or an assembly of lengths of the polymer material; the film retained on the surface area by wrapping a trailing edge of the film of polymer material around a length of batten and securing the batten to the built structure.

[00017] Preferably, the polymer material is heat shrinkable polymer material.

[00018] Preferably, the film of polymer material is stretched over the at least a portion of the surface area of the built structure; the portion of the surface area comprising a roof surface of the built structure.

[00019] Preferably, the length of batten secured to the roof surface of the built structure.

[00020] Preferably, the film of polymer material is formed as an assembly of lengths of the polymer material by applying heat to overlap portions between adjoining lengths of the polymer material.

[00021] Preferably, the heat is applied to the overlap portions while the overlap portions are secured in contact between a supporting surface and a guide rail assembly.

[00022] Preferably, the polymer material is low density polyethylene.

[00023] Preferably, the polymer material is low density polyethylene containing shrinking resins.

[00024] Preferably, the film of polymer material is in the form of a sheet.

[00025] Preferably, the film of polymer material has a thickness in the range between 100 and 500 microns.

[00026] Preferably, the film of polymer material has a thickness of 200 microns.

[00027] Preferably, the film of polymer material is provided with a heat reflective surface.

[00028] Preferably, the film of polymer material is manufactured from a blend of LDPE resin and LLDPE resin.

[00029] Preferably, the film of polymer material is manufactured from a blend of LDPE resin and LLDPE resin in the ratio of 65% LDPE and 35% LLDPE.

[00030] Preferably, the film of polymer material includes UV screen additive.

[00031] Preferably, the film of polymer material has a minimum ultimate tensile strength 1000 pound per yard (450kg per meter).

[00032] Preferably, after the film of polymer material is stretched over the surface area of the built structure and retained on the surface area heat is applied to at least portions of the film of polymer material so as to induce shrinking of the film of polymer material thereby to tighten the film of polymer material into conformity with the surface area.

[00033] According to another broad form of the invention there is provided a method of covering a surface area of a built structure; the method including the steps of:

preparing a film of polymer material as a sheet or as an assembly of lengths of the polymer material,

stretching the film of polymer material over the surface area,

wrapping at least one trailing edge of the film of polymer material around a batten,

securing the batten to a roof surface of the built structure.

[00034] Preferably, the polymer material is heat shrinkable polymer material.

[00035] Preferably, the film of polymer material is stretched over the at least a portion of the surface area of the built structure; the portion of the surface area comprising a roof surface of the built structure.

[00036] Preferably, the length of batten secured to the roof surface of the built structure.

[00037] Preferably, the film of polymer material is formed as an assembly of lengths of the polymer material by applying heat to overlap portions between adjoining lengths of the polymer material.

[00038] Preferably, the heat is applied to the overlap portions while the overlap portions are secured in contact between a supporting surface and a guide rail assembly.

[00039] Preferably, the polymer material is low density polyethylene.

[00040] Preferably, the polymer material is low density polyethylene containing shrinking resins.

[00041] Preferably, the film of polymer material is in the form of a sheet.

[00042] Preferably, the film of polymer material has a thickness in the range between 100 and 500 microns.

[00043] Preferably, the film of polymer material has a thickness of 200 microns.

[00044] Preferably, the film of polymer material is provided with a heat reflective surface.

[00045] Preferably, the film of polymer material is manufactured from a blend of LDPE resin and LLDPE resin.

[00046] Preferably, the film of polymer material is manufactured from a blend of LDPE resin and LLDPE resin in the ratio of 65% LDPE and 35% LLDPE.

[00047] Preferably, the film of polymer material includes UV screen additive.

[00048] Preferably, the film of polymer material has a minimum ultimate tensile strength 1000 pound per yard (450kg per meter).

[00049] Preferably, after the film of polymer material is stretched over the surface area of the built structure and retained on the surface area heat is applied to at least portions of the film of polymer material so as to induce shrinking of the film of polymer material thereby to tighten the film of polymer material into conformity with the surface area.

[00050] According to another broad form of the invention there is provided a method of securing a film of polymer material over a roof; the method including the steps of:

preparing a number of lengths of the material into a sheet sufficient to cover the roof area with overhang for securing the material,

wrapping edges of the overhang around battens or furring strips,

securing the battens of furring strips to barge boards or facias of the roof.

[00051] Preferably, the polymer material is a heat shrinkable polymer material.

[00052] Preferably, edges of the overhang are wrapped at least twice around the battens or furring strips.

[00053] According to another broad form of the invention there is provided a method of mechanically joining overlapping edges of adjoining lengths of polymer material on a roof; the method including the steps:

wrapping an edge of a first of two adjoining lengths of polymer material around a first batten or furring strip,

securing the first batten or furring strip on cladding of the roof by driving a fastener through the wrapping of polymer material, the batten or furring strip and cladding and into a sub-structure element of the roof,

wrapping an adjoining edge of a second of the two adjoining lengths around a second batten or furring strip,

placing the second batten or furring strip alongside the first batten or furring strip to lie on polymer material of the first of the two adjoining lengths of polymer material,

securing the second batten of furring strip by driving a fastener through the wrapping of polymer material, the batten and cladding of the roof, or into the first batten or furring strip.

[00054] Preferably, the polymer material is a heat shrinkable polymer material.

[00055] According to another broad form of the invention there is provided a method of providing covers over at least a portion of a roof of a storm damaged built structure comprising the steps of:

applying a sheet of heat shrinkable film over the portion of the roof, the sheet having a leading edge and a trailing edge and being a film of low density polyethylene including shrinking resins;

wrapping portions of the leading edge around a first batten and attaching the first batten to the underside of a first eave or to the facia of the built structure;

wrapping portions of the trailing edge around a second batten and attaching the second batten to the underside of a

second eave or to the facia of the built structure at a location different than the first batten; and

heating the sheet of heat shrinkable film to bring the film into conformity with the portion of the roof, wherein said heating step shrinks the sheet of film tight against the built structure to cover over the portion of the roof.

[00056] Preferably, the heat shrinkable film is provided with a heat reflecting surface, the heat shrinkable film forming a heat reflective layer under a roof cladding.

[00057] Preferably, the method further comprises the step of cutting the sheet of film from a roll of heat shrinkable film before said step of applying the sheet of film over the portion of the roof.

[00058] Preferably, the cutting step further comprising cutting the sheet of film at a different location than the structure.

[00059] Preferably, the sheet of film further includes a first lateral edge and a second lateral edge by which the sheet of film is bonded by the leading edge, the trailing edge, the first lateral edge and the second lateral edge; the method further including attaching the first lateral edge and the second lateral edge to the structure and heating the film to cause the film to conform to the portion of the roof.

[00060] Preferably, the composite sheet of film comprises at least a first sheet of film and a second sheet of film; the first sheet of film is bonded to the second sheet of film by applying heat to adjacent respective first and second lateral edges; the first and second lateral edges of the composite sheet of film attached to respective third and fourth edges of the structure; heating the film to cause the film to conform to the roof.

[00061] According to another broad form of the invention there is provided a method of covering at least a portion of a roof of a structure comprising the steps of:

cutting a sheet of film from a roll of heat shrinkable film;

after said cutting step, applying the sheet of film over the portion of the roof to

extend from a first edge to a second edge of the structure, wherein the film includes a leading edge and a trailing edge;

attaching the leading and trailing edges to the first and second edges, respectively; and

heating the film to cause the film to conform to the portion of the roof.

[00062] Preferably, the cutting step comprising cutting the sheet of film at a location different than the structure.

[00063] Preferably, the portion of the roof is damaged leaving the structure open to the ingress of water.

[00064] Preferably, the attaching step comprises:

wrapping portions of the leading edge around a first batten and attaching the first batten to the underside of a first eave or to the facia of the structure; and

wrapping portions of the trailing edge around a second batten and attaching the second batten to the underside of a second eave or to the facia of the built structure at a location different than the first batten.

[00065] Preferably, the sheet of film further includes a first lateral edge and a second lateral edge by which the sheet of film is bonded by the leading edge, the trailing edge, the first lateral edge and the second lateral edge; the method further including attaching the first lateral edge and the second lateral edge to the structure and heating the film to cause the film to conform to the portion of the roof.

[00066] Preferably, the composite sheet of film comprises at least a first sheet of film and a second sheet of film; the first sheet of film is bonded to the second sheet of film by applying heat to adjacent respective first and second lateral edges; the first and second lateral edges of the composite sheet

of film attached to respective third and fourth edges of the structure; heating the film to cause the film to conform to the roof.

[00067] According to another broad form of the invention there is provided a method of covering at least a portion of a roof of a structure comprising the steps of:

applying a pre-cut sheet of heat shrinkable film over the portion of the roof to

extend from a first edge to a second edge of the structure, wherein the film includes a leading edge and a trailing edge;

attaching the leading and trailing edges to the first and second edges, respectively; and

heating the film to cause the film to conform to the portion of the roof.

[00068] Preferably, the portion of the roof is damaged leaving the structure open to the ingress of water.

[00069] Preferably, the attaching step comprises:

wrapping portions of the leading edge around a first batten and attaching the first batten to the underside of a first eave or to the facia of the structure; and

wrapping portions of the trailing edge around a second batten and attaching the second batten to the underside of a second eave or to the facia of the built structure at a location different than the first batten.

[00070] Preferably, the sheet of film further includes a first lateral edge and a second lateral edge by which the sheet of film is bonded by the leading edge, the trailing edge, the first lateral edge and the second lateral edge; the method further including attaching the first lateral edge and the second lateral edge to the structure and heating the film to cause the film to conform to the portion of the roof.

[00071] Preferably, the composite sheet of film comprises at least a first sheet of film and a second sheet of film; the first sheet of film is bonded to the second sheet of film by

applying heat to adjacent respective first and second lateral edges; the first and second lateral edges of the composite sheet of film attached to respective third and fourth edges of the structure; heating the film to cause the film to conform to the roof.

[00072] According to another broad form of the invention there is provided a method of providing covers over at least a portion of a roof of a storm damaged built structure comprising the steps of:

applying a sheet of heat shrinkable film over the portion of the roof, the sheet having a leading edge and a trailing edge and being a film of low density polyethylene including shrinking resins;

wrapping portions of the leading edge around a first batten and attaching the first batten to an underside of a first eave or to a facia of the built structure;

wrapping portions of the trailing edge around a second batten and attaching the second batten to an underside of a second eave or to the facia of the built structure at a location different than the first batten; and

heating the sheet of heat shrinkable film to bring the film into conformity with the portion of the roof, wherein said heating step shrinks the sheet of film tight against the built structure to cover over the portion of the roof.

[00073] According to another broad form of the invention there is provided a method of covering at least a portion of a roof of a structure comprising the steps of:

cutting a sheet of film from a roll of heat shrinkable film;

after said cutting step, applying the sheet of film over the portion of the roof to

extend from a first edge to a second edge of the structure, wherein the film includes a leading edge and a trailing edge;

wrapping portions of the leading edge around a first batten and attaching the first batten to an underside of a first eave or to a facia of the structure;

wrapping portions of the trailing edge around a second batten and attaching the second batten to an underside of a second eave or to the facia of the built structure at a location different than the first batten; and

heating the film to cause the film to conform to the portion of the roof.

[00074] According to another broad form of the invention there is provided a method of covering at least a portion of a roof of a structure comprising the steps of:

applying a pre-cut sheet of heat shrinkable film over the portion of the roof to

extend from a first edge to a second edge of the structure, wherein the film includes a leading edge and a trailing edge;

wrapping portions of the leading edge around a first batten and attaching the first batten to an underside of a first eave or to a facia of the structure;

wrapping portions of the trailing edge around a second batten and attaching the second batten to an underside of a second eave or to the facia of the built structure at a location different than the first batten; and

heating the film to cause the film to conform to the portion of the roof.

[00075] Accordingly, in a first broad form of the invention, there is provided a system for providing covers for surface areas of built structures; the system including a film of heat shrinkable material for stretching and heat shrinking over one or more of the surfaces of the built structure; the film formed as a sheet comprising an assembly of lengths of the heat shrinkable material prepared on a supporting surface; characterized in that the sheet is prepared by applying heat to

overlap portions between adjoining lengths of the heat shrinkable material while the overlap portions are secured in contact between the supporting surface and a guide rail assembly laid over the overlap portions; the overlap portions welded together by a heat gun moveable along the guide rail assembly at a predetermined distance above the overlap portions.

[00076] Preferably, the supporting surface is a ground surface.

[00077] Preferably, the supporting surface is a surface of a supporting element placed on a ground surface.

[00078] Preferably, the guide rail assembly comprises spaced apart guide rail elements interconnected at their outer ends by connecting elements.

[00079] Preferably, the guide rail elements are provided with inward facing recesses.

[00080] Preferably, spacing between the guide rail elements is in the range of 15 to 30mm.

[00081] Preferably, the supporting element comprises a length of heat resistant material.

[00082] Preferably, the supporting element is provided with a length of rope or cable attached to one end of the supporting element; the length of rope or cable being at least the length of a length of overlap of two adjoining lengths of the heat shrinkable material.

[00083] Preferably, a heat gun is provided with a heat directing shroud; width of the heat directing shroud sized so as to fit between edges of the recesses provided in the guide rail elements of the guide rail assembly.

[00084] Preferably, a length of the heat directing shroud is sized to provide fusion of a portion of the overlap of the two adjoining lengths of heat shrinkable material in a predetermined time.

[00085] Preferably, consistency and quality of a weld is ensured by separation between the heat gun and the overlap of

material and a predefined rate of travel of the heat gun along the guide rail.

[00086] Preferably, undersides of the rail elements of the guide rail assembly are provided with strips of a heat insulating material.

[00087] Preferably, at least one air vent is provided in any of the lengths of heat shrinkable material; the air vent comprising an aperture and an overlying cover.

[00088] Preferably, three sides of material comprising the overlying cover overlap three edges of the aperture and are welded to the surface of the length of heat shrinkable material; a fourth side of the overlying cover overlapping a fourth edge of the aperture by at least 300mm.

[00089] In another broad form of the invention, there is provided a method of preparing a film of material for covering surfaces of a built structure; the film comprising an assembly of lengths of heat shrinkable material; the method including the step of aplying heat along an overlap between adjoining lengths of the heat shrinkable material; characterized in that the application of heat is guided by a guide rail assembly; the guide rail assembly placed over a section of overlap lying on an elongate supporting element positioned on a ground surface.

[00090] Preferably, the method includes the steps of:

1) positioning the elongate supporting element on a ground surface.

2) extending a rope or cable attached at an end of the supporting element along an intended position of an overlap of two adjoining lengths of the heat shrinkable material,

3) positioning the two adjoining lengths of the heat shrinkable material with a predetermined overlap over the supporting element and the rope or cable,

4) positioning the guide rail assembly over a first overlap portion of the two adjoining lengths of the heat shrinkable material and coincident with the supporting element,

5) moving a heat gun provided with a heat directing shroud along the guide rail assembly to fuse the first overlap portion of the two lengths of heat shrinkable material together.

[00091] Preferably, subsequent overlap portions of the two adjoining lengths of heat shrinkable material are fused together by the steps of:

6) removing the guide rail assembly from the first or preceding overlap portion,

7) using the rope or cable to reposition the supporting element under a next overlap portion of the adjoining lengths of the heat shrinkable material,

8) positioning the guide rail assembly over the next overlap portion and coincident with the supporting element,

9) moving the heat gun provided with the heat directing shroud along the guide rail assembly to fuse the next overlap portion of the two lengths of heat shrinkable material together.

[00092] Preferably, the guide rail assembly comprises two spaced apart guide rail elements interconnected at their outer ends by connector elements.

[00093] Preferably, at least one air vent is provided in at least one length of the heat shrinkable material; the air vent comprising a pre-cut aperture in the length of heat shrinkable material and a cover; three sides of the cover overlapping three edges of the aperture and welded to the length of heat shrinkable material; a fourth side of the cover over lapping a fourth edge of the aperture by at least 300mm.

[00094] In a further broad form of the invention, there is provided a method of preparing an assembly of sheets of a heat shrinkable material on a ground surface; the assembly of sheets prepared for covering one or more surfaces of a built structure; the method including locating overlapping lengths of adjacent strips of the heat shrinkable material between a supporting surface and a guide rail assembly placed over the overlapping lengths; a heat source movable along the guide rail assembly at

a predetermined rate heat welding the overlapping lengths to form the assembly of sheets.

[00095] Preferably, the heat source is a heat gun mounted on a trolley adapted for movement along rails comprising the guide rail assembly.

[00096] Preferably, the trolley is powered to give a controlled rate of movement along the rail system.

[00097] In another broad form of the invention, there is provided a method of covering a storm damaged area of a roof of a built structure; the method includes the step of preparing an assembly of sheets of a heat shrinkable material on a ground surface; the method including sequentially applying the steps of:

1) arranging a two adjoining sheets of the heat shrinkable material with an overlap over a supporting surface;

2) securing the first portion of the overlap by placing a guide rails assembly over the first portion of the overlap,

3) applying heat to the first portion of the overlap by moving a heat source along the guide rail assembly to weld overlap portions of the sheets along the first overlap portion together,

4) sequentially moving the guide rail assembly to subsequent portions of the overlap to weld subsequent overlap portions together to a required length of the assembly of sheets of heat shrinkable material.

[00098] Preferably, the method includes the further steps of:

1) pulling the assembly of sheets onto the roof surface to cover at least the storm damaged area of the roof,

2) attaching at least opposing edges of the assembly of sheets to battens,

3) securing the battens at the opposing edges of the assembly of sheets to any one of eaves, facia boards or roof battens.

[00099] Preferably, the guide element is a guide rail assembly; the guide rail assembly structured to constrain

movement of the heat source along the portion of the overlap at a predetermined separation above the heat shrinkable material.

[000100] In another broad form of the invention, there is provided a method of preparing a sarking layer for a built structure; the sarking layer comprising an assembly of sheets of a heat shrinkable material; the method including the steps of:

1) positioning a portion of an overlap between two adjoining sheets of the heat shrinkable material on a supporting surface,

2) positioning a guide rail assembly over a first portion of the overlap to secure the first portion of the overlap between the supporting surface and the guide rail assembly,

3) moving a heat source along the guide rail assembly to heat weld the overlap portions of the adjoining sheets of heat shrinkable material one to another,

4) moving the guide rail assembly to a next overlapping portion of the adjoining sheets of heat shrinkable material and repeating step 3 until a required length of the assembly of sheets of heat shrinkable material is reached,

5) adding a further adjoining sheet of heat shrinkable material to form a further overlap portion and repeating steps 1 to 4 until a required width of the assembly of sheets of heat shrinkable material is reached.

[000101] In still a further broad form of the invention, there is provided a method of temporarily waterproofing a storm damaged area of a roof of a built structure by securing an assembly of sheets of heat shrinkable material to at least a portion of the roof surface; the assembly of sheets prepared by heat welding overlap portions of adjoining sheets; the method including the steps of securing sequential overlap portions of the adjoining sheets between a supporting surface and a guide rail assembly, and passing a heat source along the guide rail assembly.

[000102] Preferably, the method includes the further steps of:

1) pulling the assembly of sheets of heat shrinkable material onto the roof surface to cover the storm damaged area,
2) securing battens to at least two opposing edges of the assembly of sheets of the heat shrinkable material,
3) securing the battens to eaves, facia boards or roof battens,
4) applying the heat source to the heat shrinkable material to tightly conform the assembly of sheets to the roof surface.

[000103] In still a further broad form of the invention, there is provided a method of preparing and securing an assembly of sheets of heat shrinkable material over a damaged section of a roof surface; the method including the steps of:

1) drawing and cutting from a roll of the heat shrinkable material a required number of sheets at a required length to cover the damaged section,
2) arranging on a supporting surface adjoining lengths of the heat shrinkable material with a predetermined overlap,
3) placing a guide rail assembly over a first portion of the overlap to secure the first portion of the overlap between the supporting surface and the guide rail assembly,
4) moving a heat source along the guide rail assembly to weld respective overlap portions of the adjoining sheets one to the other,
5) moving the guide rail assembly to any required subsequent portions of the overlap and repeating step 4 to complete welding of the overlap,
6) adding as required further lengths of the heat shrinkable material and repeating steps 2 to 5 to complete the assembly of sheets,
7) pulling the assembly of sheets with the battens onto the roof surface to cover the damaged section of the roof surface,
8) affixing battens to at least two opposing edges of the assembly of sheets,

9) affixing the battens at the two opposing edges of the assembly of sheets to suitable elements of the roof,

10) applying the heat source to the surface of the assembly of sheets to tighten the heat shrinkable material into conformity with the roof surface.

[000104] Preferably, the supporting surface is a ground surface.

[000105] Preferably, the supporting surface is the upper surface a length of heat resistant material substantially coextensive with the guide rail assembly.

[000106] Preferably, the length of heat resistant material is pulled from the first portion of the overlap to subsequent portions of the overlap by a rope or cable extending from the length of heat resistant material.

[000107] In another broad form of the invention, there is provided a kit for temporary repair of a storm damaged roof or other surface of a built structure; the kit comprising a box enclosing at least one roll of heat shrinkable material, a heat source and a guide rail assembly.

[000108] Preferably, the roll or rolls of heat shrinkable material are rotatably mounted within the box enabling lengths of the heat shrinkable material to be drawn from the box for use.

[000109] Preferably, the heat shrinkable material is wound onto the roll or rolls in a twice folded state; the width of the heat shrinkable material when spread out after cutting from a roll approximately equal to three times the width of the roll.

[000110] Preferably, adjacent lengths of the heat shrinkable material are spread on a supporting surface with a predetermined overlap of one length of the heat shrinkable material over the other; the guide rail assembly positioned over a first overlap portion of the overlap and the heat source moved along the guide rail assembly to weld the adjoining lengths along the first overlap portion.

BRIEF DESCRIPTION OF DRAWINGS

[000111] Embodiments of the present invention will now be described with reference to the accompanying drawings wherein:

[000112] Figure 1 is a perspective view of a portion of a building of which the roof has sustained damage,

[000113] Figure 2 is a side sectioned view of a portion of a building and existing roof structure to which has been applied a roof cover system according to the invention,

[000114] Figure 3 is a side sectioned view of a portion of a partly completed building showing the application of a roof cover system of the invention to unclad roof framing,

[000115] Figure 4 is a further side sectioned view of the building of Figure 3 showing the roof cover system of the invention functioning as a permanent sarking layer,

[000116] Figure 5 is an illustration of the preparation of a sheet of heat shrinkable material prepared on a ground surface as an assembly of lengths of material taken from a roll of film,

[000117] Figure 6 is a perspective view of a portion of heat shrinkable material in position over a section of roof in which the sheets of material were prior prepared with air vents,

[000118] Figure 6a is a perspective view of one preferred embodiment of the air vents of Figure 6,

[000119] Figure 7 is a perspective view of a supporting element laid out on a ground surface in preparation of assembly of lengths of material according to a fourth embodiment of the invention,

[000120] Figure 8 shows portions of two adjoining, overlapped lengths of material laid out so that a first portion of the overlap lies over the supporting element of Figure 7,

[000121] Figure 9 is a perspective view of a guide rail assembly for use with the supporting element of figure 7,

[000122] Figure 10 is a cross section of the guide rail assembly of figure 9 showing a portion of a heat gun and the overlap of

the two length of material supported on the supporting element of figure 7,

[000123] Figure 11 is a further cross section view of a roof of a building showing an alternative method of securing a roof cover according to the invention to the roof,

[000124] Figure 12 is a view of a preferred arrangement of folding the heat shrinkable material for winding onto a dispensing roll rotationally supported in kit box,

[000125] Figure 13 is an extract from a laboratory test report on performance characteristics of the heat shrinkable material,

[000126] Figures 14 and 15 illustrate the use of an assembly of sheets of shrinkable material prepared according to the invention for application to the roof and wall structures of a building as a sarking layer,

[000127] Figure 16 is a plan view of a roof of a house which has been covered by heat shrinkable material secured to the perimeter of the roof,

[000128] Figure 17 is a partial cross section view of an edge of the roof of figure 16 and details of a method of securing the heat shrinkable material,

[000129] Figure 18 is a further plan view of a roof of a house covered by lengths of heat shrinkable material joined mechanically,

[000130] Figure 19 is a cross section of a preferred mechanical joint between the overlapping lengths of heat shrinkable material of figure 18.

DETAILED DESCRIPTION OF PREFERRED EMBODIMENTS

[000131] The roof cover system of the present invention provides for a system and method for covering a damaged or uncompleted roof of a building. The system uses a heat shrinkable film, preferably a low-density polyethylene containing shrinking resins, UV inhibitors, anti brittling compounds, fire retardant additives and strengtheners for tear resistance. The film is

preferably between 100 and 500microns in thickness, though most preferably 200microns, and is provided in rolls of various widths and lengths. In at least one preferred form of the film, it is provided with a heat reflective surface. A preferred specification for the film is given at the end of the description.

First Preferred Embodiment

[000132] With reference now to Figure 1, typical damage to a tiled roof 10 of a building 12 may include the loss of a number of tiles 12 due to a high wind shear event, leaving the building 14 open to the ingress of water. Water ingress may also occur if tiles are cracked for example from heavy hail impact or falling trees or branches. Emergency temporary repair is provided by the roof cover system of the invention by applying the above described film over that portion of the roof which has sustained damage.

[000133] If required, sharp edges protruding from the roof surface may first be covered with suitable wadding and adhesive tape to prevent possible tearing of the film during application.

[000134] The extent of roof to be covered is measured and the most suitable available width roll of the heat shrinkable film selected. Film is cut to one or more lengths sufficient to extend from one edge of the roof to an opposite edge. With reference to Figure 2, a trailing edge of a length of film is mechanically attached at the first edge 16 of the roof 10. In one preferred method as shown in Figure 2, the trailing edge 15 of the film 18 is wrapped once around a length of batten 18. In one preferred form the batten is as long as the width of the film. The batten 20 is mechanically fixed to the underside 22 of the eaves 24 at the first edge of the roof 10. In still another possible arrangement, the batten 20 can be fixed directly to an existing batten through the roof tiles, as shown in Figure 11.

[000135] The leading edge of the film is now passed over the roof to the opposite edge (not shown) of the roof and the leading edge of the film secured to the opposite side eaves in similar manner to that already described. If the outer side edge of the length of film adjoins an edge of the roof, this may be similarly secured under the eaves along that side of the roof. Alternatively, the leading edge of the film may be secured to the barge or fascia boards.

[000136] In one form heat is now applied to the film at the underside of the eaves 24 with a heat gun (not shown) to cause the film 18 to shrink securely around the batten and the undersides of the eaves. The heat gun, now attached to an extension arm (not shown), is then used to apply heat to at least a region around the perimeter of the film 18 stretched over the roof surface, causing it to tightly conform to the surface and covering missing or cracked tiles 12.

[000137] If the extent of the damage requires, successive lengths of film can be applied side by side. In a preferred form the film can be applied side by side with an overlap of preferably 150 to 300mm. In a preferred form heat is applied along these overlaps to seal the edges of the adjoining lengths together.

[000138] Valley areas and other discontinuities in the roof surface can be accommodated by cutting film to suit the area involved and heat sealing to adjoining film length edges. Vertical roof penetrations, such as chimney stacks ventilators and the like, are sealed by preferably a 300mm rise of film. Edges of riser sections of film can be taped or cable-tied to the penetration.

[000139] By the above means, a damaged roof can be rapidly and securely covered to prevent water ingress and damage to the inside of the building. Unlike tarpaulins which are difficult to secure and remain liable to dislodgement in high winds, the heat shrinkable film by conforming closely to the roof surface,

provides a secure seal over the damage until permanent repairs can be made.

Second Preferred Embodiment

[000140] In a second preferred embodiment of the invention, a damaged section of a roof to be temporarily protected prior to permanent repair, is again covered by a heat shrinkable film. In this embodiment however, the method of application is different.

[000141] Instead of attempting to apply individual lengths of film, attaching a length at a first end to the eaves at one side of the roof, stretching the length over the roof to be attached at the eaves at the opposite side, and taping the edges of adjoining lengths of film together, the method of this embodiment, with reference to Figure 5 is as follows:

(a) the location of the damaged section 12 of roof 10 is assessed in relation to the nearest opposing edges of the roof,

(b) the length of film required to extend between the opposing roof edges is estimated, allowing for overhang and fixing requirements,

(c) the width of the damaged area is ascertained and the number of lengths of the available film required to cover and overlap the damaged area determined,

(d) the number of lengths of material 18 is then cut from a roll 40 of the film and laid out side by side on the ground,

(e) while on the ground, adjoining edges of the lengths of film are taped to form a waterproof assembled sheet of heat shrinkable film, sufficient to stretch from one roof edge to the opposite roof edges and of sufficient width to cover the damaged area.

[000142] This assembled sheet is now pulled up onto the roof, positioned so as to cover the damaged area and outer ends fastened in similar manner as previously described above.

[000143] An advantage of this method is that there is no need to lift a relatively heavy roll of heat shrinkable material onto the roof and unroll it one what may be quite steep surfaces. Moreover it has been found in practice that the arrangement described in the first preferred embodiment above of taping the edges of adjoining lengths of the material together on the roof is both difficult and dangerous. This is especially so if the damage to the roof is extensive and perhaps been rendered structurally unsafe. The method of the present described embodiment minimises activity on the roof surface, requiring only that one edge of the sheet of material be carried over the roof from a first edge to an opposite edge.

Third Preferred Embodiment

[000144] In a third preferred embodiment of the invention, a heat shrinkable film may be applied to the roof framing of an uncompleted building. In this embodiment as shown in Figure 3, the heat shrinkable film 18 is applied after the roof framing is complete but preferably prior to the attachment of facia boards.

[000145] In this embodiment also, lengths of film are prepared from suitable width rolls sufficient to stretch from one side of the roof to an opposite side. In this case the trailing and leading edges of the length of film are preferably attached by means of battens 20 fixed to the underside of the outer ends 26 of rafters 28, that is between the outer ends of the rafters 28 and the wall frame 30.

[000146] The heat shrinkable film 18 in this embodiment, is provided with a heat reflecting inner surface 32 so that the film 18 forms a permanent sarking layer behind the wall cladding or under the roof cladding, either tiles 34, as shown in Figure 4, or metal sheeting. Thus in this embodiment the heat shrinkable film of the invention act both to protect the timberwork of a

building under construction and provides a replacement for conventional reflective sarking.

[000147] The weatherproof nature of the heat shrinkable material applied in this way provides for internal work on the building to continue in the event of inclement weather, thus increasing productivity and economy of construction.

[000148] It will be understood that the method of application described in the second preferred embodiment above is also, indeed perhaps even more so, applicable to the present embodiment. In this case manipulating a roll of material and taping edges of lengths of material together over the open framework of the roof of a building under construction is even more difficult so that assembly on the ground, perhaps into a number of sheets, prior to placement over the roof framing, is clearly advantageous.

[000149] In each of the above described embodiments, the sheet of material may be further prepared, as shown in Figure 6, by adding a distribution of air vents 100 at various locations in each of the strips 18. Preferably, the vents 100, as shown in Figures 6 and 6A, take the form of one-way covers or flaps 110 which are affixed over an aperture 112 cut into the strips of film 18 at the desired location. The flaps 110 are so arranged as to prevent the ingress of rainwater while allowing the passage of air.

[000150] In one preferred form the vent 100 is pre-formed of low density polyethylene and provided with a self adhesive base 114. To apply the vent 100 after the aperture has been prepared, a protective cover 116 is peeled off the adhesive layer of base 114 and the vent 100 pressed into position.

[000151] These vents allow the exhalation of air from underneath the sheet of material, either as a result of higher air pressure arising within the roof space, for example through rising warm air or through the ingress of wind, or due to negative pressure above the sheet material.

Fourth Preferred Embodiment

[000152] In the above described embodiments, in those cases where two or more adjoining lengths of heat shrinkable material were described as assembled into a sheet on a ground surface, the lengths of material were secured together by adhesive tape. While this can be adequate for temporary cover of a storm damaged structure for example, a stronger and, where required, a far stronger and more permanent solution is the heat welding of adjoining lengths of material along an overlap.

[000153] Nevertheless, prior to welding, it is preferable to hold the edge of the uppermost sheet of the overlap in place by adhesive tape to prevent problems in windy conditions.

[000154] With reference now to figures 7 to 10, in the present invention, in one preferred arrangement an elongate support element 200 is laid at a convenient location on the ground surface on which the sheet is to be assembled. The support element 200 may comprise a length of timber or other, substantially heat resistant material, preferably 200mm wide and somewhat longer than the length of weld in a weld sequence. The support element is provided with an attached rope or cable 210 of sufficient length to extend the length of the lengths of heat shrinkable material to be joined together. This rope or cable 210 is stretched out in line with the support element 200 and along the intended join between two lengths of the material.

[000155] As shown in Figure 8, two adjoining lengths of heat shrinkable material 212 and 214 are then laid out side by side with an overlap 216 of approximately 150mm over the supporting element 200 and the rope or cable 210, and so that the supporting element 200 underlies a first portion 218 of the overlap. Adhesive tape is applied to the outer edge of the overlap, at least for the first portion 218 of the overlap 216, if required.

[000156] As shown in Figure 10, a guide rail assembly 220 substantially coextensive with the supporting element, is then

laid over and centrally along the first portion 218 of the overlap, with the guide rail assembly resting on the supporting element 200 so that the overlapping portions of the two lengths of material 212 and 214 are secured between the guide rail assembly 220 and the supporting element 200.

[000157] The guide rail assembly 220 comprises two, spaced apart, rigid rail elements 222 and 224, preferably 1m in length but may be provided in various lengths, for example 300, 600 or 1200mm. The rail elements 222 and 224 are interconnected at their outer ends by connection cross members 226 and 228. Preferably, the end profiles of the rail elements 222 and 224 are as shown in Figure 10 with recessed inward facing edges 225 and 227 and are preferably spaced 20mm apart. The recesses are so arranged to guide a heat source at a predetermined distance above the overlap. The rail elements 222 and 224 are formed of metal, steel or preferably aluminium. Finally, the rail assembly 220 is provided with at least one, preferably two grab handles 230 for manipulating the assembly in use.

[000158] A heat gun 232 (partly shown in Figure 10) is provided with a heat directing shroud 234 sized in width to fit between the recessed edges 226 and 228 of the guide rail assembly 220 and a length sized to deliver a quantum of heat to an area of overlapping sheets of material between the rail assembly, sufficient to fuse that area together within a predetermined time duration.

[000159] The heat gun 232 with its attached shroud 234 in drawn along the guide rail assembly 220 at an even rate, thus fusing that length of overlap 216 covered by the rail assembly. In one preferred arrangement, the heat gun may be mounted on a trolley (not shown) which traverses the guide rail. The heat gun may be moved along the guide rail manually, or the trolley could be powered to give a controlled rate of movement.

[000160] The arrangement of the guide rail which controls the separation of the heat gun from the material, combined with a

predefined rate of travel, assures the consistency and quality of the weld.

[000161] The supporting element 200 is then drawn with the rope or cable 210 into a next position along the sheet overlap and the guide rail assembly 220 repositioned accordingly. Heat is then applied to this next length of the overlap, and the process repeated until the required length of sheet assembly is reached.

[000162] In an alternative arrangement, the sheets of material may be laid out over a suitable ground surface such as for example a nearby car park or a suitably flat area of lawn. In this instance, the overlap portion is again secured prior to the welding process by the placement of the guide rail assembly over the overlap portion and the heat source applied as described above. After welding this first overlap portion, the guide rail assembly is positioned over a next overlap portion until a required length of sheet assembly is reached.

[000163] The air vents 100 referred to above and shown in Figure 5, may be welded into the required locations in similar fashion. The cover piece of material forming the vent cover preferably overlaps three of the sides of the pre-cut aperture in the sheet of material sufficient for welding the overlap as described for the joining of the two lengths of material. These three sides of the piece of material forming the vent cover are welded to the length of material around the pre-cut aperture, with the fourth side of the material arranged to overlap the aperture by a minimum of 300mm.

[000164] The arrangement of this preferred embodiment allows for very secure, watertight and relatively accurate joining of adjoining lengths of the heat shrinkable material. The portion of overlap to be joined is held securely by the weight of the guide rail assembly while the guide rail profiles both a guide and control of the application of fusing heat.

[000165] The assembly of sheets is prepared for fastening to the roof by adding securing battens at least along two opposing

edges after pulling the assembly up onto the roof surface to cover the damaged areas. The battens are then mechanically secured either to the eaves of the roof, the facia boards or, if the damage is restricted to a relatively small area of the roof, to battens of the roof structure.

[000166] In this latter case and for a tiled roof as shown in Figure 11, a masonry drill bit is used to drill holes through tiles coincident with the underlying roof batten and fasteners driven through the securing batten, the tiles and into the roof batten. Once in position, the heat source is applied to the assembly of sheets to tighten the heat shrinkable material into conformity with the roof surface.

[000167] The heat shrinkable material, guide rail assembly, heat gun, tape and associated tools may be provided in kit form. In a preferred arrangement shown in Figure 12, a box 40 is provided in which at least one, preferably two rolls 42, of the heat shrinkable material 44 are rotationally supported so as to allow the material to be drawn from the box. The box 40 is provided with a stop 46 which allows the lid 48 to be propped open leaving a narrow slit for the material 44 to be drawn through while at the same time providing a cutting guide for cutting the material when drawn out to a required length. The box is further provided with a compartment 50 for storage of the heat source and ancillary equipment (not shown).

[000168] Preferably, the heat shrinkable material is wound onto the rolls 40 folded as shown in Figure 12 so that when drawn from the box and opened out the sheet of material is approximately four times the width of the roll from which is was drawn.

[000169] It will be understood that the procedure of the assembly of lengths of the heat shrinkable material as described for this embodiment may equally be applied for the assembly of sheets of heat shrinkable material intended to form a sarking layer for the roof or walls of a building where the sarking

layer is secured to the roof and wall framing before applying the roof and wall cladding.

Fifth Preferred Embodiment

[000170] With reference to Figure 1, typical damage to a tiled roof 10 of a building 12 may include the loss of a number of tiles 12 due to a high wind shear event, leaving the building 14 open to the ingress of water. Water ingress may also occur if tiles are cracked for example from heavy hail impact or falling trees or branches. Emergency temporary repair is provided by the roof cover system of the invention by applying the above described film over that portion of the roof which has sustained damage.

[000171] If required, sharp edges protruding from the roof surface may first be covered with suitable wadding and adhesive tape to prevent possible tearing of the film during application.

[000172] The extent of roof to be covered is measured and the most suitable available width roll of the heat shrinkable film selected. Film is cut to one or more lengths sufficient to extend from one edge of the roof to an opposite edge. With reference to Figure 2, a trailing edge of a length of film is mechanically attached at the first edge 16 of the roof 10. In one preferred method as shown in Figure 2, the trailing edge 15 of the film 18 is wrapped once around a length of batten 18. In one preferred form the batten is as long as the width of the film. The batten 20 is mechanically fixed to the underside 22 of the eaves 24 at the first edge of the roof 10. In still another possible arrangement, the batten 20 can be fixed directly to an existing batten through the roof tiles, as shown in Figure 11.

[000173] The leading edge of the film is now passed over the roof to the opposite edge (not shown) of the roof and the leading edge of the film secured to the opposite side eaves in similar manner to that already described. If the outer side edge of the length of film adjoins an edge of the roof, this may be similarly

secured under the eaves along that side of the roof. Alternatively, the leading edge of the film may be secured to the barge or fascia boards.

[000174] In a preferred form no heat is applied to the film. The film is secured around the batten and the undersides of the eaves to tightly conform to the surface and covering missing or cracked tiles 12.

[000175] If the extent of the damage requires, successive lengths of film can be applied side by side. In a preferred form the film can be applied side by side with an overlap of preferably 150 to 300mm. In a preferred form no heat is applied along these overlaps.

[000176] Valley areas and other discontinuities in the roof surface can be accommodated by cutting film to suit the area involved and mechanically fixed to adjoining film length edges. Vertical roof penetrations, such as chimney stacks ventilators and the like, are sealed by preferably a 300mm rise of film. Edges of riser sections of film can be taped or cable-tied to the penetration.

Sixth Preferred Embodiment

[000177] With reference now to figures 16 and 17, in this preferred embodiment, heat shrinkable material **300** is used to cover a roof **302** in its entirety. The heat shrinkable material may be formed from lengths of material, combined into a sufficiently large assembly of lengths (not shown) by any of the methods described above, to completely cover the roof with some overhang.

[000178] In this preferred arrangement, the material **300** is drawn over the perimeter guttering **304**, before edges of the overhang being wrapped at least partially, but more preferably at least twice, around a batten or furring strips **306**, which is then secured to the facia or barge board **308**.

[000179] Although the embodiment has been described in figures 16 and 18 with reference to a simple rectangular or square roof,

it will be understood that the method of attachment of a film of heat shrinkable material may be applied to any roof with conventional guttering and/or facia boarding below the overhanging edge of the roof cladding.

[000180] Turning now to figures 18 and 19, in this instance also the entire roof **302** is covered by heat shrinkable material **300**, and is again secured in the manner described above, that is by battens or furring strips **306** attached to facias or barge boards. In this case however, adjoining lengths **310A** and **310B** of heat shrinkable material making up the area of material required, are mechanically joined along overlapping edges **312** and **314** by side-by-side battens or furring strips **316** and **318** and secured to the roof.

[000181] As shown in figure 19, the edge **312** of a first of the overlapping edges of length **310A** is wrapped at least partially, but more preferably at least twice, around a first batten or furring strip **316.** The first batten of furring strip **316** is then placed on the roof surface and secured to a substructure element (not shown) of the roof by a screw **320** driven through the wrapped polymer, the batten of furring strip, and the roof cladding.

[000182] The edge **314** of the second of the overlapping edges of length **310B** is then similarly wrapped around the second batten or furring strip **318**, and this second batten or furring strip placed beside the first, lying over the polymer material of the first length **310A.** This batten or furring strip **318** is then similarly secured either by driving a screw **322** through the wrapped material, batten and roof cladding into the substructure element. Alternatively, the second batten may be secured to the first.

In Use

[000183] In use, one or more kits are transported to a site where damage to a roof has occurred. The damaged area is measured and the number of lengths to cover the width and the length of

the lengths of material determined. These lengths are drawn from the kit box and an initial two lengths placed side by side on the supporting surface, which may be directly on the ground or on a supporting element, with the required overlap, and the overlap welded as described above.

[000184] The welding process described in this embodiment of the invention has been proven to provide extremely strong welds, well able to withstand any conceivable wind load when applied to a roof or to the structure of a building under construction, as attested by the extract from a laboratory test report shown in Figure 13. As well, wind tunnel testing has shown the welding process of the invention will withstand wind speeds of up to at least 160Km/Hr.

Preferred Material Specification

[000185] A blend of LDPE resin & LLDPE resin (suitable resin examples Dowlex 2645 liner low density polyethylene (LLDPE) with a relative density of 0.918 & melt index of 0.85 mixed with Dow 303E low density polyethylene (LDPE) with a relative density 0.922 & melt index of 0.30. Best performance is a mixture of 65% LDPE & 35% LLDPE.

UV screen additive minimum 1 year

Non halogen Fire retardant additive (high quality that can be used on food grade manufacturing machines) Fire additive to meet the French M1 standard

200 micron in thickness (8 mil)

Roll length 131 ft (40m)

Roll "lay-flat" width 16.4 feet (5m) - Note roll to be concertina folded to an overall width of 1300mm.

Film rolled onto heavy duty 3'inch (76mm) cardboard cores.

Each roll to weigh 83.67 pound (37.5 kg)

Stormseal logo to be printed on the film logo size - 3 ft wide (1000mm) x 10 inches high (250mm) printed in a repeat manner.

Film to have a minimum 40% shrink capability

High edge tear resistance

Minimum ultimate tensile strength 1000 pound per yard (450kg per meter)

[000186] In a preferred form, the material for the protective covering may be a blend of LDPE resin & LLDPE resin. The material may include additives to improve its UV stability and flame retardant properties.

[000187] One example of the material specification is listed as follows:

Property	Specification
Gauge	200um
Dart Drop	280 grams
Tensile Yield – Machine Direction	10.5 MPa
Tensile Yield – Transverse Direction	10.5 MPa
Ultimate Tensile – Machine Direction	14.0 MPa
Ultimate Tensile – Transverse Direction	13.0 MPa
Shrink – Machine Direction	45%
Shrink – Transverse Direction	40%
Co-efficient of friction (COF) - Slip	0.25
UV stability	2500kWh/m2 of solar exposure (Equivalent to 1 year of solar exposure at the equator)
Flame Retardant	Self-extinguishes within 5 seconds
Colour	Pantone 1655C
Corona Treatment	38 Dyne
Corona Treatment Area	Strip treated to cover printed area only
Resins	Virgin resin only Minimum 10% LLDPE
Cores	76mm inside diameter

Application as Wall Sarking

- Select the correct width roll as it is important to have the least amount of welds in the sealing process.
- Site measure the area which to be sealed.
- Ensure any sharp object are padded.
- Attach one side of the shrink wrap to the inside edge of perimeter stud work. Securely fix by a continuous batten.
- Take the leading edge of the said film across to the

Opposite the structure.

- Securely fix off the opposite side by continuous batten.
- Apply heat to the film wrapped stud in a continuous even pattern with a similar motion of a spray paint gun.
- Allow time for the film to shrink on to itself.
- Repeat this process to all vertical wall surfaces.
- Now using the heat gun extension tool apply an even continuous heat to the entirety of the vertical wall surface allowing enough passes for the shrink wrap to contract.
- Continue this process with overlapped joints of 300mm until the structure is covered entirely.
- For wall penetrations such as windows and doors cut the plastic as required.
- Allow to cut around alt wail penetrations allowing a minimum of 300mm rise around all penetrations. Apply heat to ensure the film shrinks back onto the sub structure allowing a watertight seal.
- Ensure all edges are sealed.
- Continuously check for burn holes and patch as required.
- For vertical impact damaged areas a sub structure frame will be required for the shrink wrap to be applied over. This is a simple batten type frame with diagonal bracing securely fixed to the structure.

Uses Include

- Wall insulation and draught elimination.
- Asbestos removal and disposal.
- All weather protection during construction to eliminate lost time.
- Cost effective weather seal for storm Impact damaged buildings and or structures on vertical surfaces.
- Replacement/substitution for Vertical tarpaulins

installations.

- Vertical timber framework protection during construction.

Benefits

- Cost effective replacement for wall sarking/ insulation. Reflective surface provides excellent thermal qualities.
- Provides excellent thermal insulation on walls.
- Ensures kiln dried structural framework is not exposed to weather conditions eliminating structural movement.
- Provides a dust free environment when removing asbestos.
- Reduces residual cost and time during re construction of storm Impact damaged buildings and or structures.
- Eliminates inclement weather days after main structure is in place therefore assisting productivity.
- No ongoing hire cost as is for tarpaulins.
- Eliminates the need to re attend sites to secure tarpaulins during the reconstruction process.

CLAIMS

1. A method of providing covers over at least a portion of a roof of a storm damaged built structure comprising the steps of:

- applying a sheet of heat shrinkable film over the portion of the roof, the sheet having a leading edge and a trailing edge and being a film of low density polyethylene including shrinking resins;
- wrapping portions of the leading edge around a first batten and attaching the first batten to the underside of a first eave or to the facia of the built structure;
- wrapping portions of the trailing edge around a second batten and attaching the second batten to the underside of a second eave or to the facia of the built structure at a location different than the first batten; and
- heating the sheet of heat shrinkable film to bring the film into conformity with the portion of the roof, wherein said heating step shrinks the sheet of film tight against the built structure to cover over the portion of the roof.

2. The method of claim 1, wherein the heat shrinkable film is provided with a heat reflecting surface, the heat shrinkable film forming a heat reflective layer under a roof cladding.

3. The method of claim 1 further comprising the step of cutting the sheet of film from a roll of heat shrinkable film before said step of applying the sheet of film over the portion of the roof.

4. The method of claim 3, said cutting step further comprising cutting the sheet of film at a different location than the structure.

5. The method of claim 1 wherein the sheet of film further includes a first lateral edge and a second lateral edge by which the sheet of film is bonded by the leading edge, the trailing edge, the first lateral edge and the second lateral edge; the method further including attaching the first lateral edge and the second lateral edge to the structure and heating the film to cause the film to conform to the portion of the roof.

6. The method of claim 5 where the composite sheet of film comprises at least a first sheet of film and a second sheet of film; the first sheet of film is bonded to the second sheet of film by applying heat to adjacent respective first and second lateral edges; the first and second lateral edges of the composite sheet of film attached to respective third and fourth edges of the structure; heating the film to cause the film to conform to the roof.

7. A method of covering at least a portion of a roof of a structure comprising the steps of:

- cutting a sheet of film from a roll of heat shrinkable film;
- after said cutting step, applying the sheet of film over the portion of the roof to
- extend from a first edge to a second edge of the structure, wherein the film includes a leading edge and a trailing edge;

- attaching the leading and trailing edges to the first and second edges, respectively; and
- heating the film to cause the film to conform to the portion of the roof.

8. The method of claim 7, said cutting step comprising cutting the sheet of film at a location different than the structure.

9. The method of claim 7, wherein the portion of the roof is damaged leaving the structure open to the ingress of water.

10. The method of claim 7, said attaching step comprising:

- wrapping portions of the leading edge around a first batten and attaching the first batten to the underside of a first eave or to the facia of the structure; and
- wrapping portions of the trailing edge around a second batten and attaching the second batten to the underside of a second eave or to the facia of the built structure at a location different than the first batten.

11. The method of claim 7 wherein the sheet of film further includes a first lateral edge and a second lateral edge by which the sheet of film is bonded by the leading edge, the trailing edge, the first lateral edge and the second lateral edge; the method further including attaching the first lateral edge and the second lateral edge to the structure and heating the film to cause the film to conform to the portion of the roof.

12. The method of claim 11 where the composite sheet of film comprises at least a first sheet of film and a second sheet of

film; the first sheet of film is bonded to the second sheet of film by applying heat to adjacent respective first and second lateral edges; the first and second lateral edges of the composite sheet of film attached to respective third and fourth edges of the structure; heating the film to cause the film to conform to the roof.

13. A method of covering at least a portion of a roof of a structure comprising the steps of:

- applying a pre-cut sheet of heat shrinkable film over the portion of the roof to
- extend from a first edge to a second edge of the structure, wherein the film includes a leading edge and a trailing edge;
- attaching the leading and trailing edges to the first and second edges, respectively; and
- heating the film to cause the film to conform to the portion of the roof.

14. The method of claim 13, wherein the portion of the roof is damaged leaving the structure open to the ingress of water.

15. The method of claim 13, said attaching step comprising:

- wrapping portions of the leading edge around a first batten and attaching the first batten to the underside of a first eave or to the facia of the structure; and
- wrapping portions of the trailing edge around a second batten and attaching the second batten to the underside of a second eave or to the facia of the built structure at a location different than the first batten.

16. The method of claim 13 wherein the sheet of film further includes a first lateral edge and a second lateral edge by which the sheet of film is bonded by the leading edge, the trailing edge, the first lateral edge and the second lateral edge; the method further including attaching the first lateral edge and the second lateral edge to the structure and heating the film to cause the film to conform to the portion of the roof.

17. The method of claim 16 where the composite sheet of film comprises at least a first sheet of film and a second sheet of film; the first sheet of film is bonded to the second sheet of film by applying heat to adjacent respective first and second lateral edges; the first and second lateral edges of the composite sheet of film attached to respective third and fourth edges of the structure; heating the film to cause the film to conform to the roof.

ABSTRACT

A method of providing covers over at least a portion of a roof of a storm damaged built structure that includes the steps of:

- applying a sheet of heat shrinkable film over the portion of the roof, the sheet having a leading edge and a trailing edge and being a film of low density polyethylene including shrinking resins;
- wrapping portions of the leading edge around a first batten and attaching the first batten to the underside of a first eave or to the facia of the built structure;
- wrapping portions of the trailing edge around a second batten and attaching the second batten to the underside of a second eave or to the facia of the built structure at a location different than the first batten; and
- heating the sheet of heat shrinkable film to bring the film into conformity with the portion of the roof, wherein the heating step shrinks the sheet of film tight against the built structure to cover over the portion of the roof.

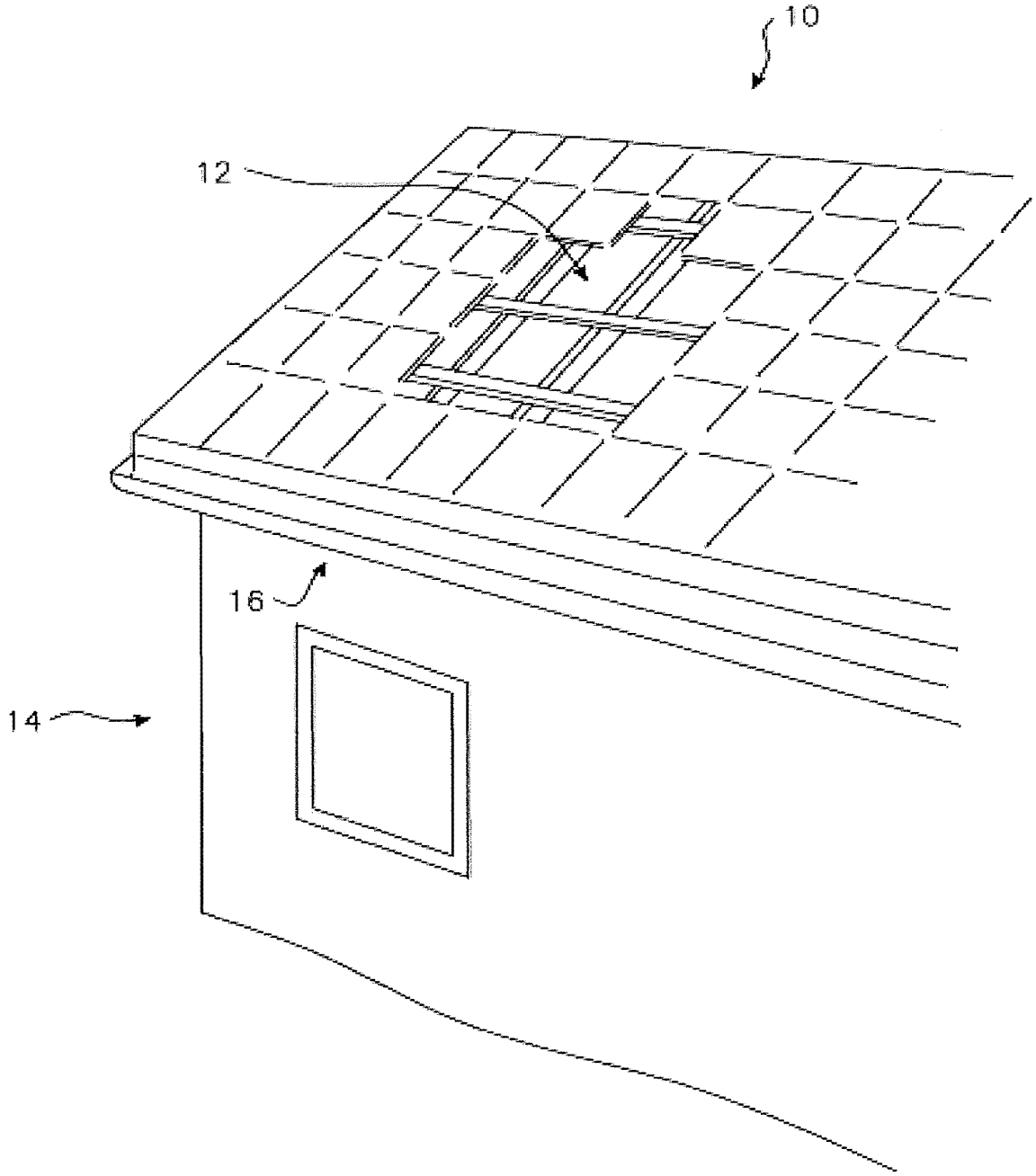

Fig. 1

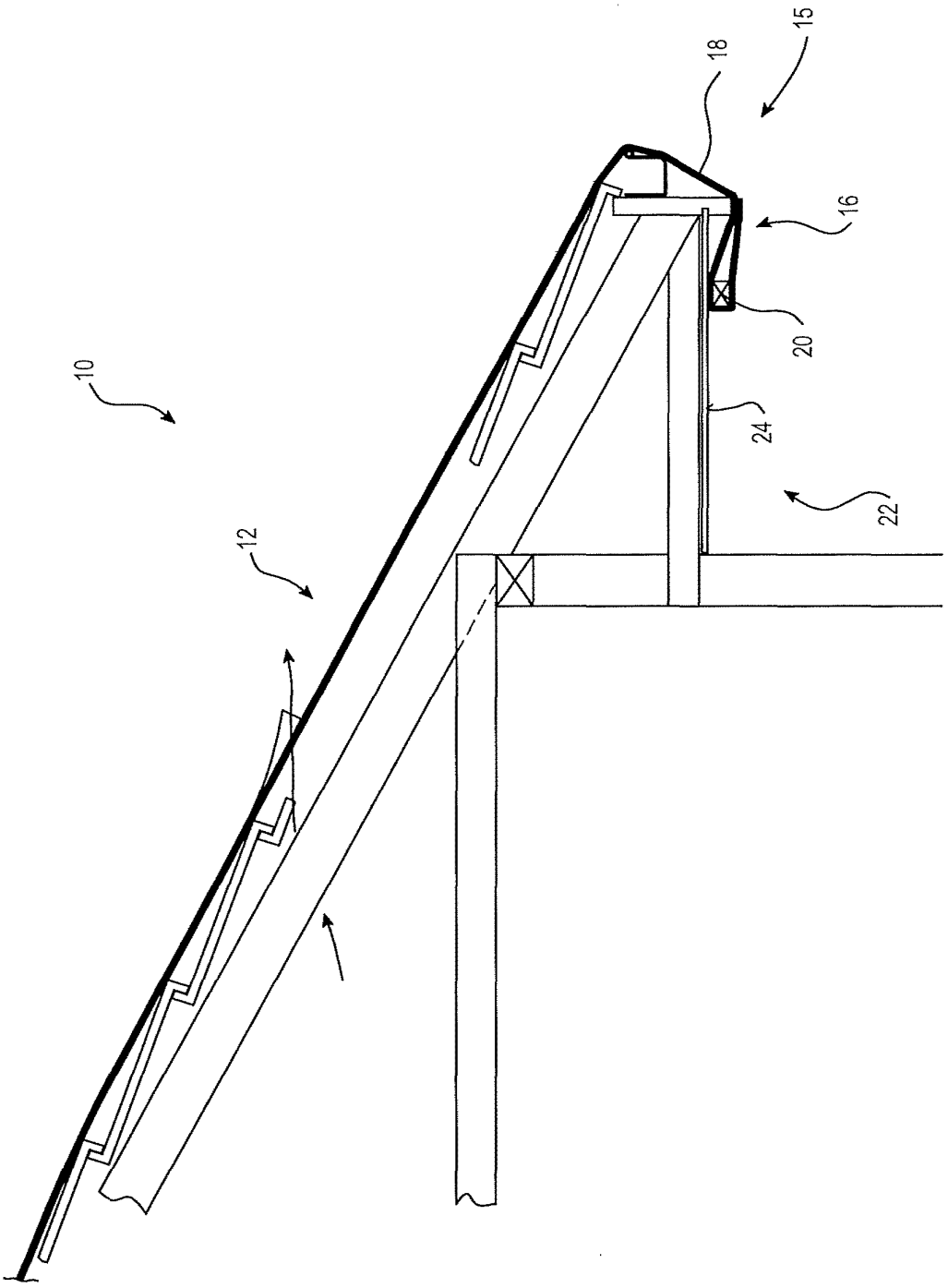

Fig. 2

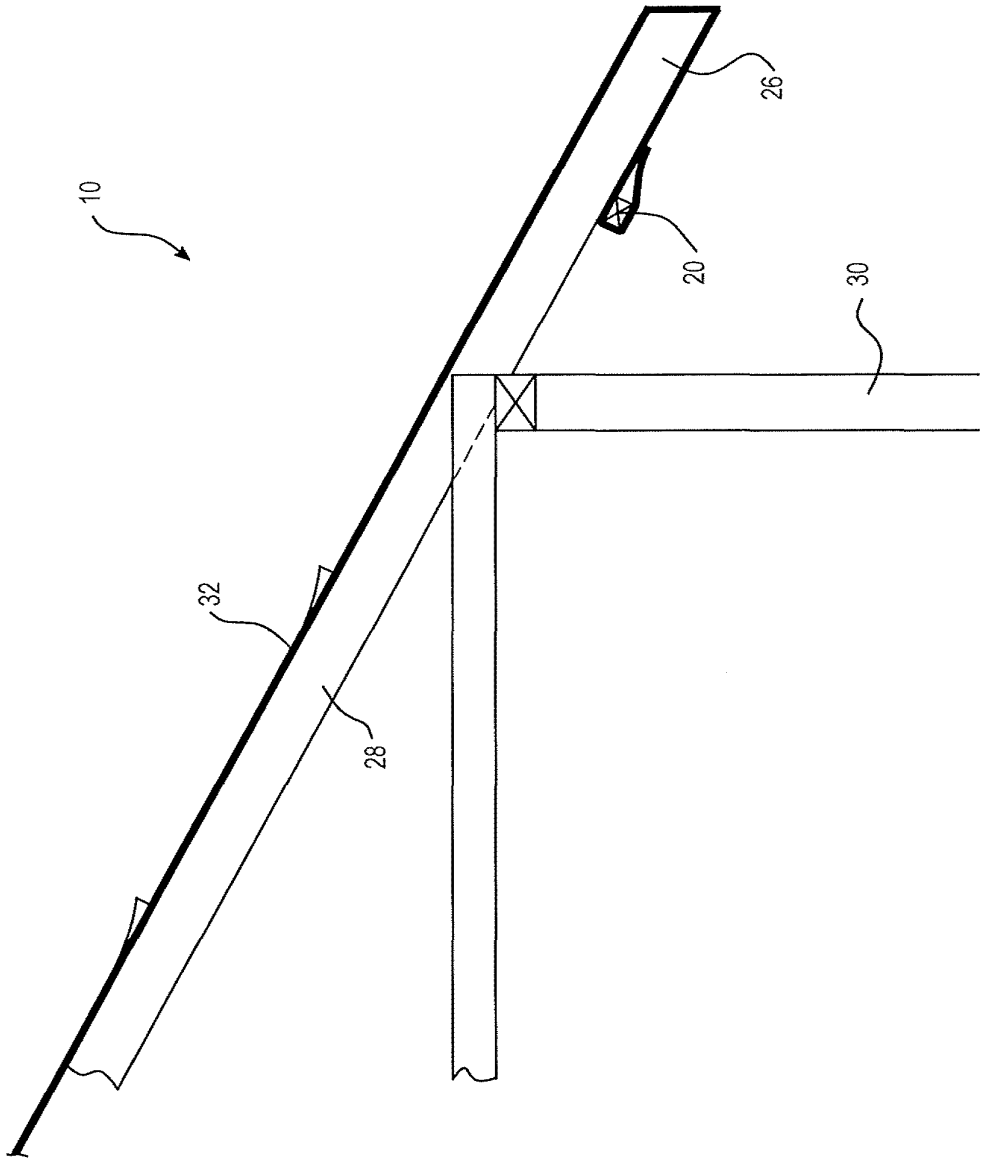

Fig. 3

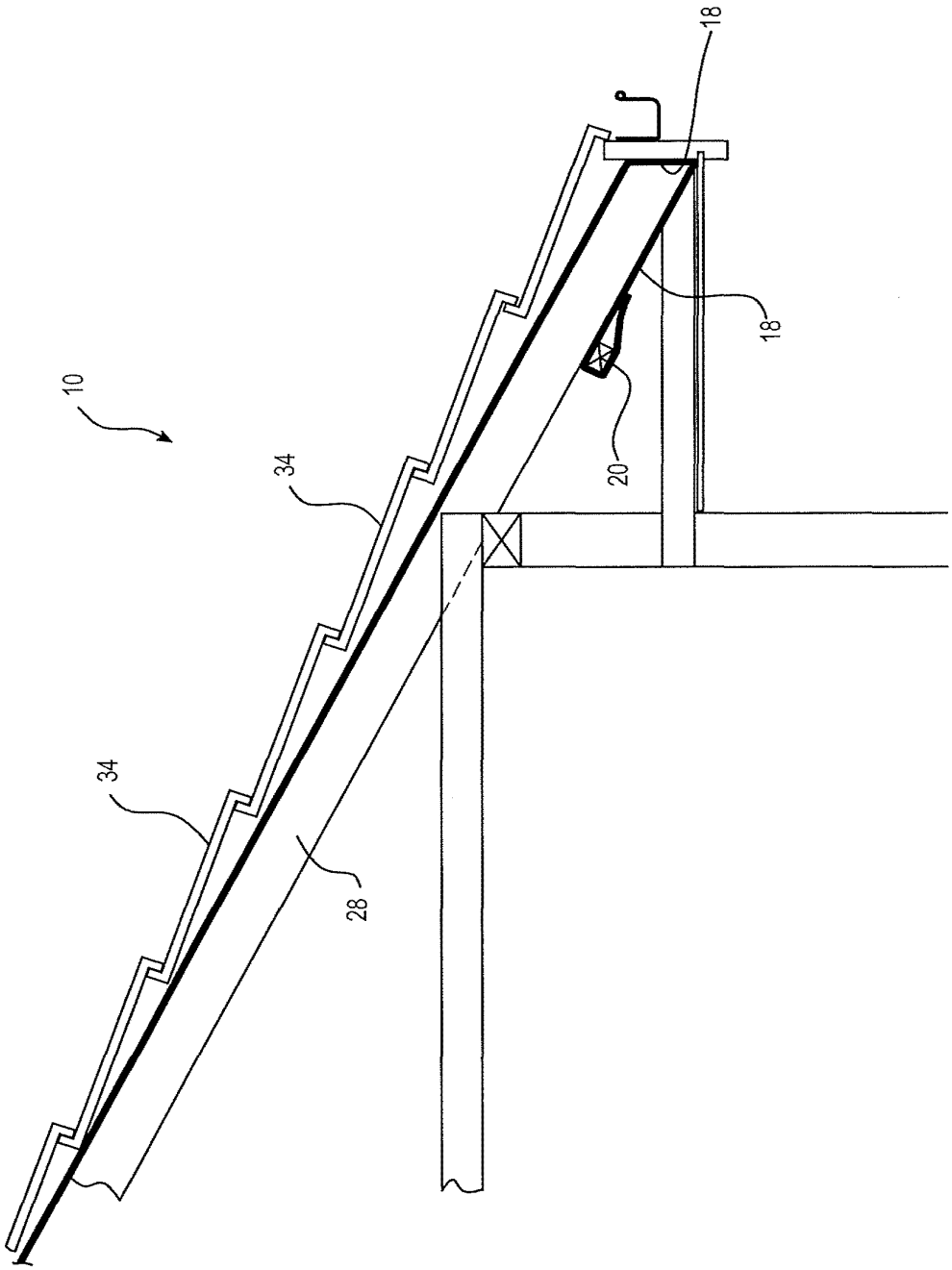

Fig. 4

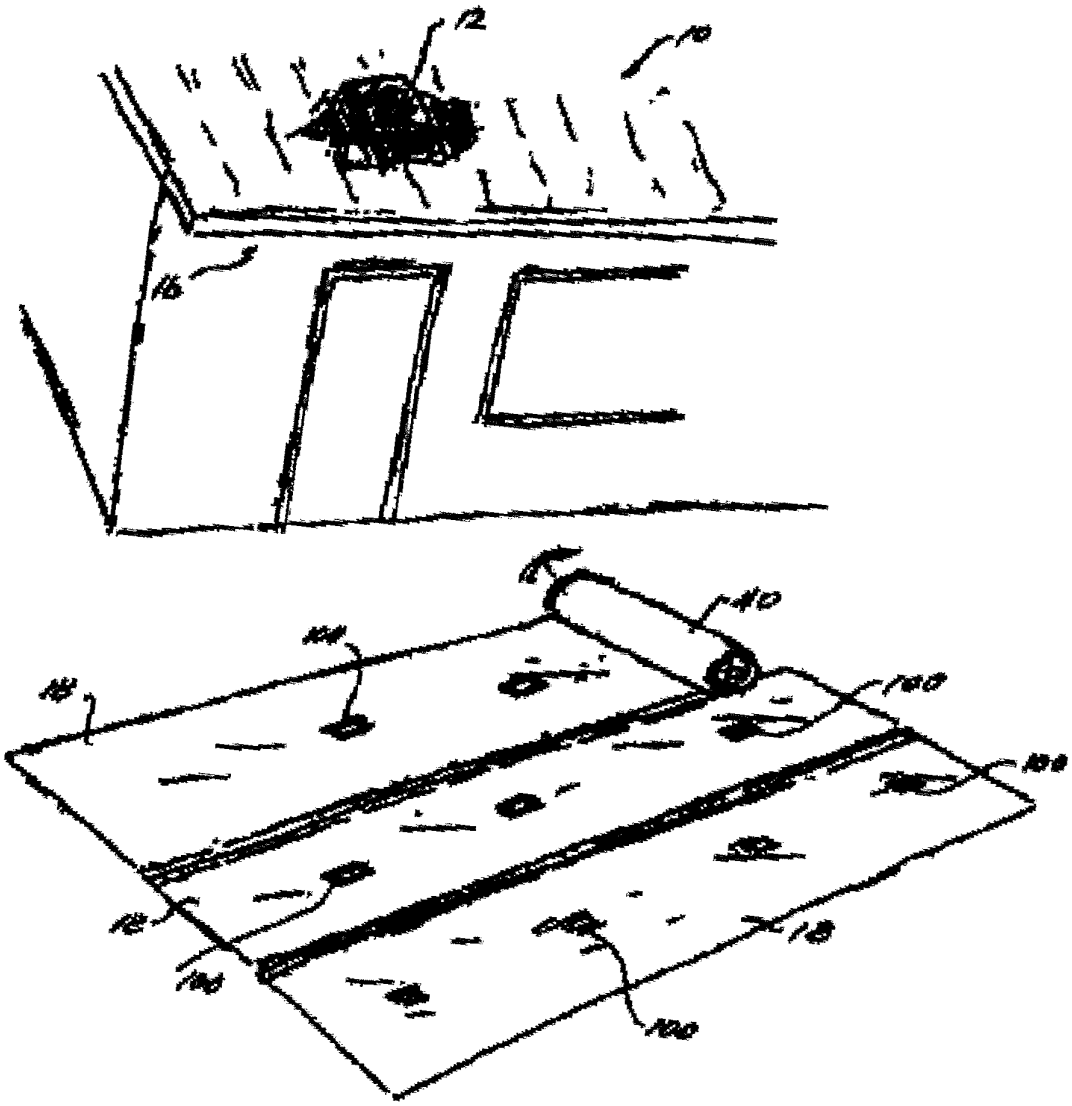

Fig. 5

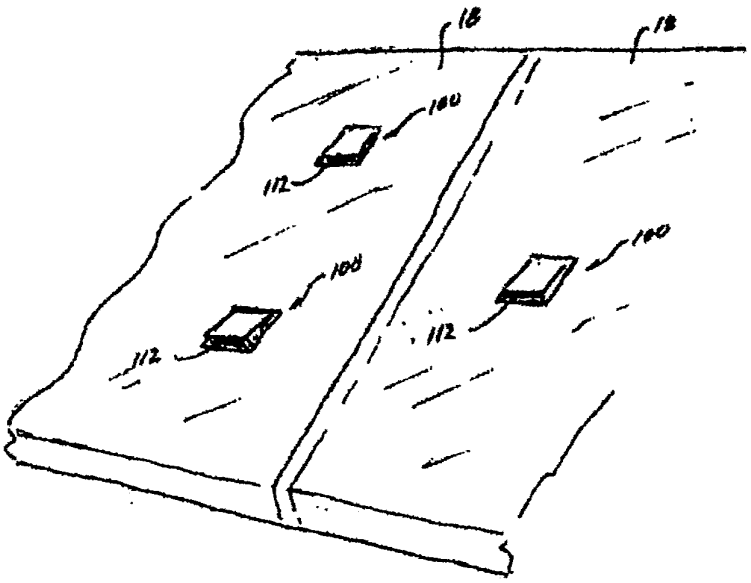

Fig. 6

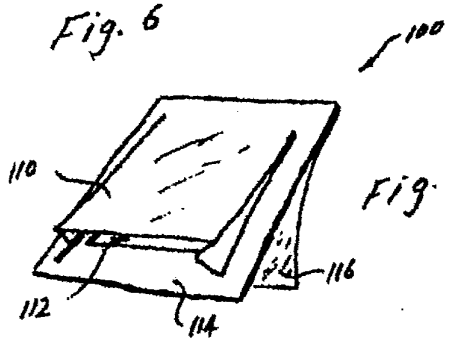

Fig. 6A

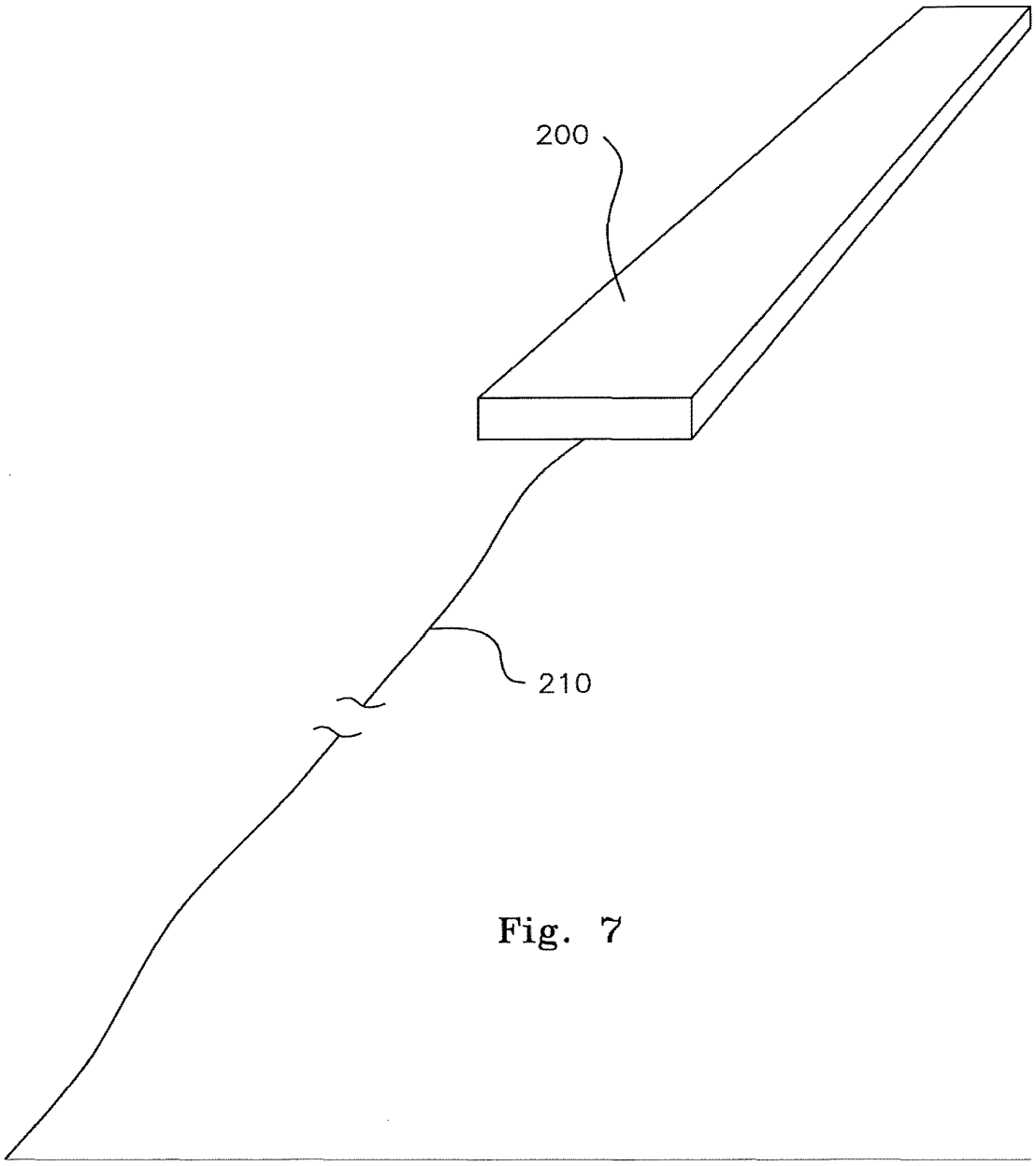

Fig. 7

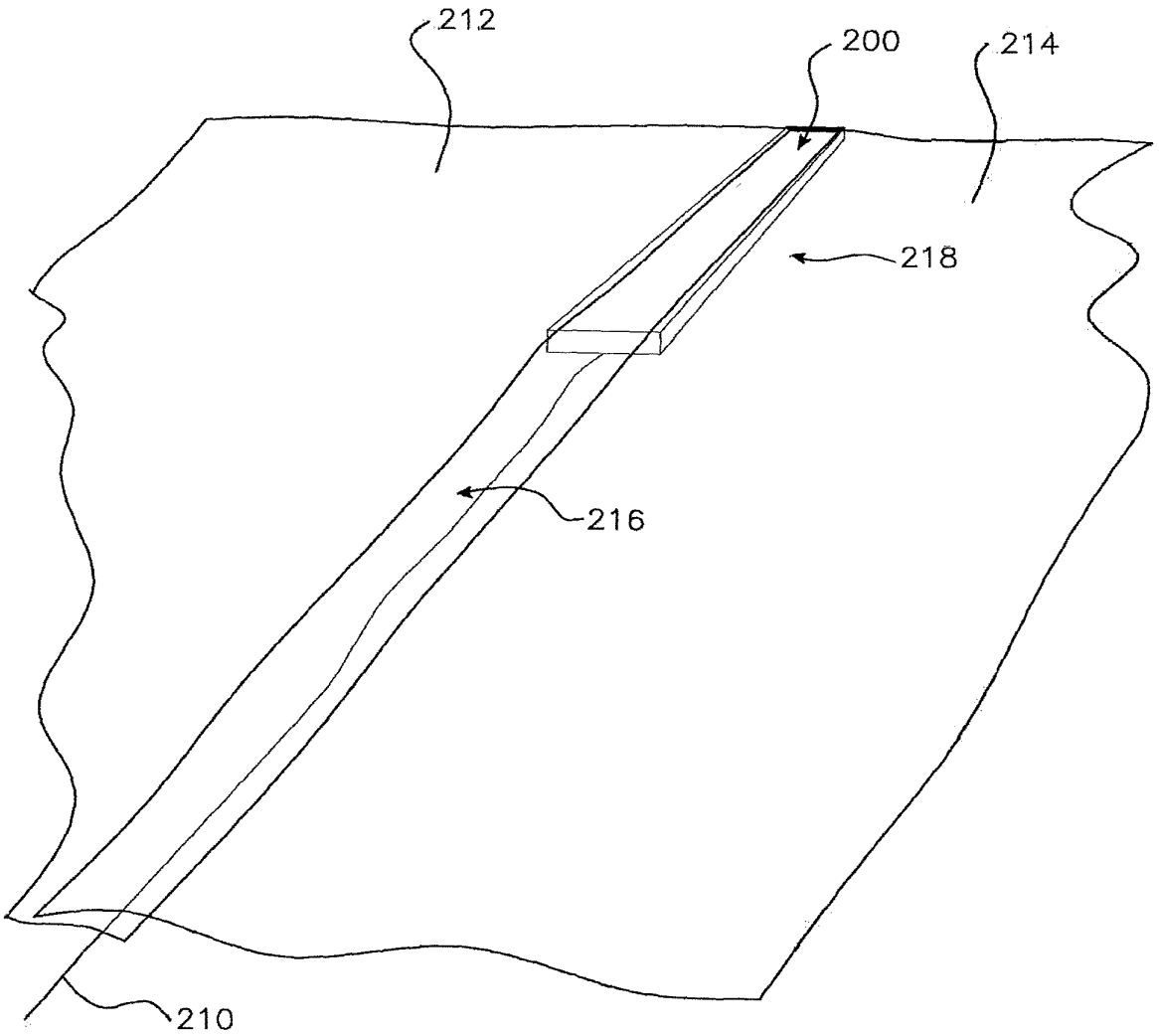

Fig. 8

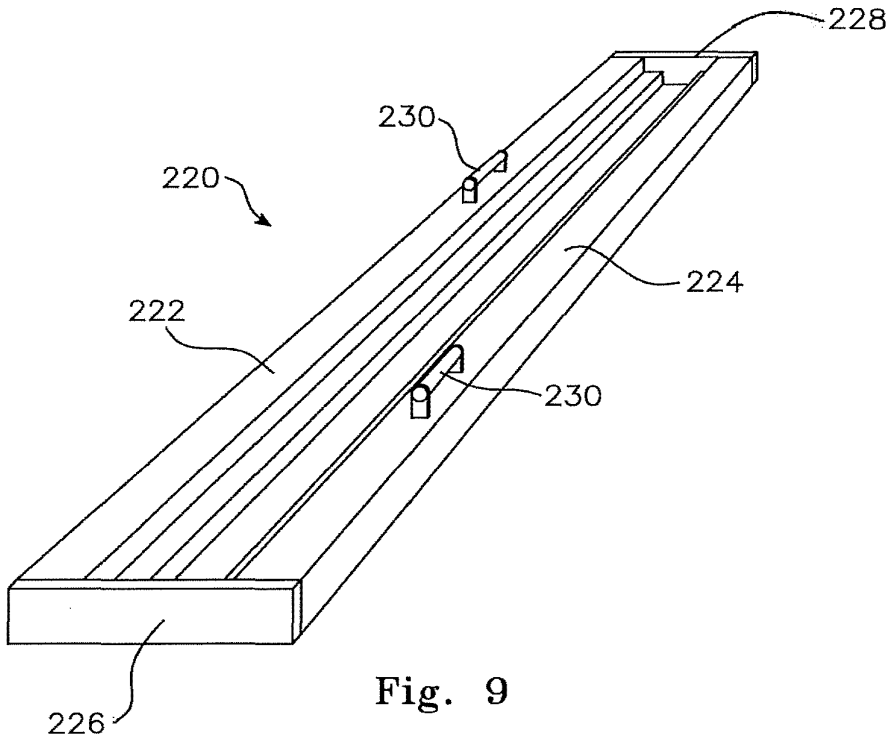
228
230
220
224
222
230
226

Fig. 9

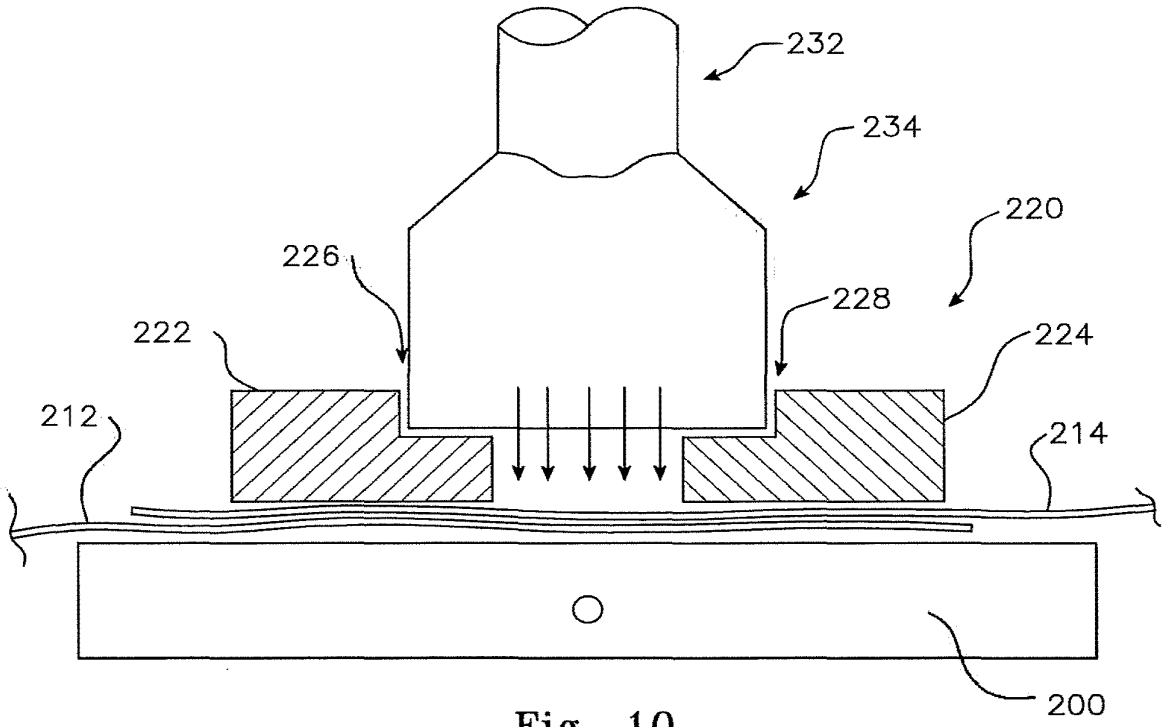
232
234
220
226
228
222
224
212
214
200

Fig. 10

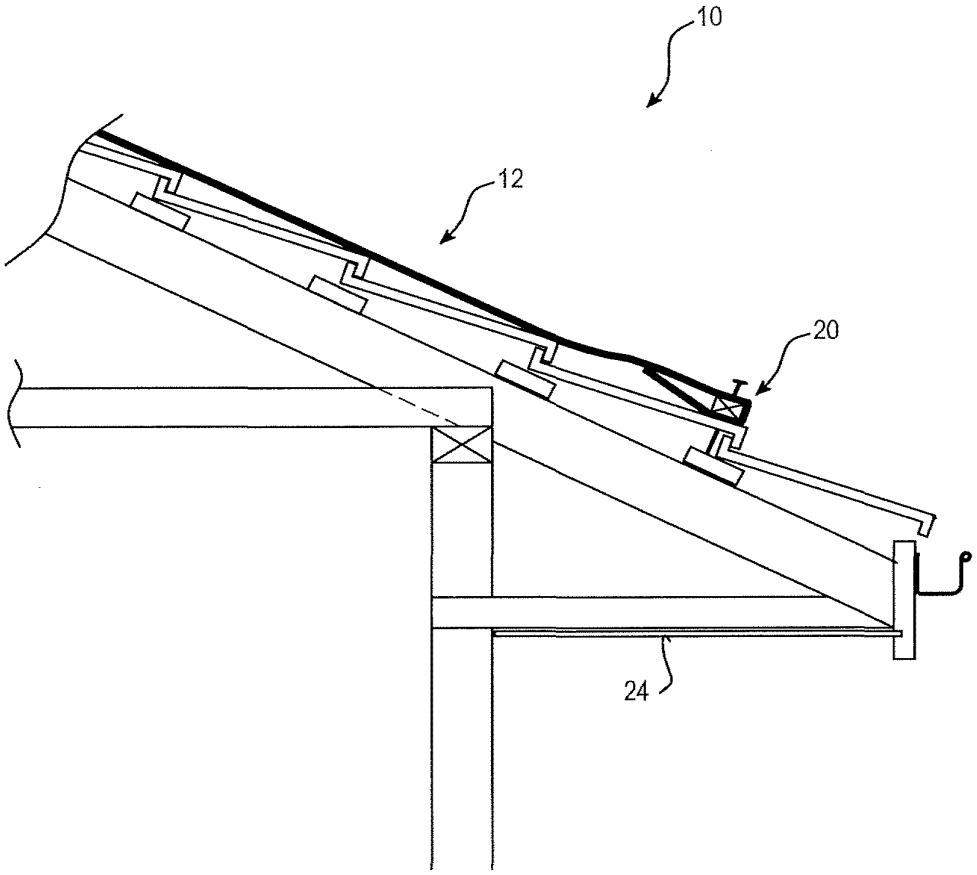

Fig. 11

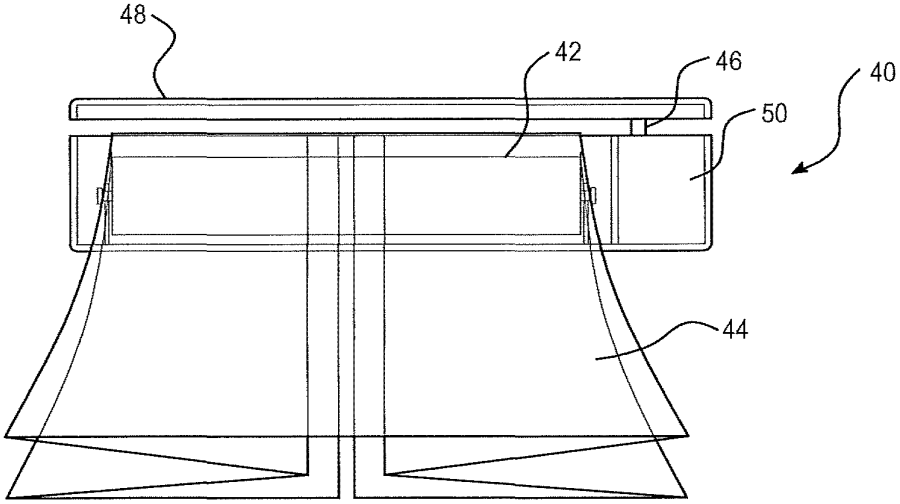

Fig. 12

Material: Geomembrane(s)
TRI Log No.: A16-150

Sample Identification: Stormseal UV

PARAMETER	TEST REPLICATE NUMBER 1	2	3	4	5	6	7	8	9	10	MEAN	STD. DEV.
Thickness (ASTM D 5199)												
Thickness (mm)	0.22	0.20	0.20	0.22	0.20	0.22	0.22	0.20	0.20	0.22	0.21	0.01
											0.20	<< min
Tensile Properties (ASTM D 6693, 2 ipm strain rate)												
MD Yield Strength (N/mm)	2.3	2.4	2.3	2.6	2.1						2.3	0.2
TD Yield Strength (N/mm)	2.1	2.0	2.1	2.1	2.1						2.1	0.1
MD Break Strength (N/mm)	4.2	4.1	3.2	5.3	3.0						4.0	0.9
TD Break Strength (N/mm)	4.4	4.3	4.4	4.7	4.7						4.5	0.2
MD Yield Elongation (%)	30	27	26	27	23						27	3
TD Yield Elongation (%)	16	22	16	21	19						19	3
MD Break Elongation (%)	461	428	315	534	326						413	93
TD Break Elongation (%)	480	504	487	509	507						497	13
Puncture Resistance (ASTM D 4833)												
Puncture Strength (N)	94	94	86	93	95	92	91	96	91	88	92	3
Tear Resistance (ASTM D 1004)												
MD Tear Strength (N)	22	22	23	21	20	22	22	24	17	22	21	2
TD Tear Strength (N)	21	20	23	17	21	21	21	22	19	20	20	2
Determination of Seam Strength (AS3706.6)												
MD Seam Strength (kN/m)	2.2	2.2	2.2								2	0
Note: Seam failure did not occur												

MD Machine Direction TD Transverse Direction

Fig. 13

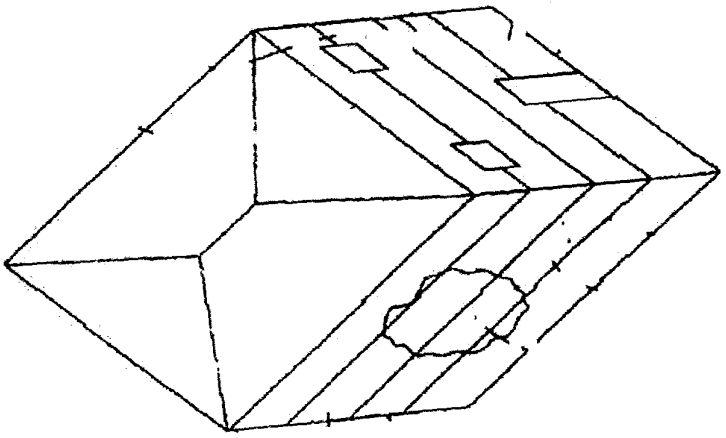

Fig. 15

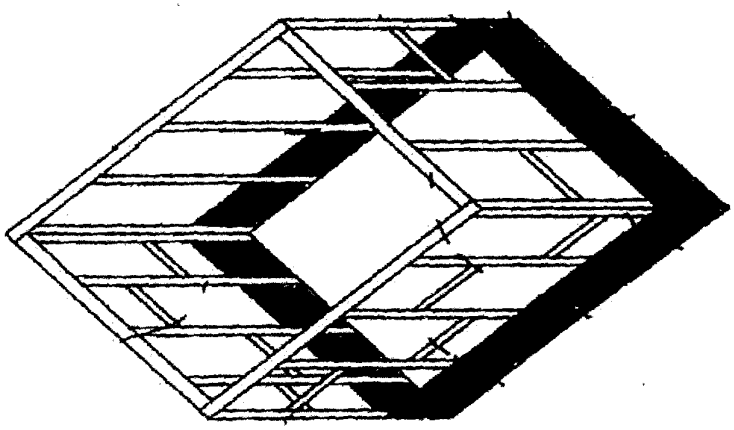

Fig. 14

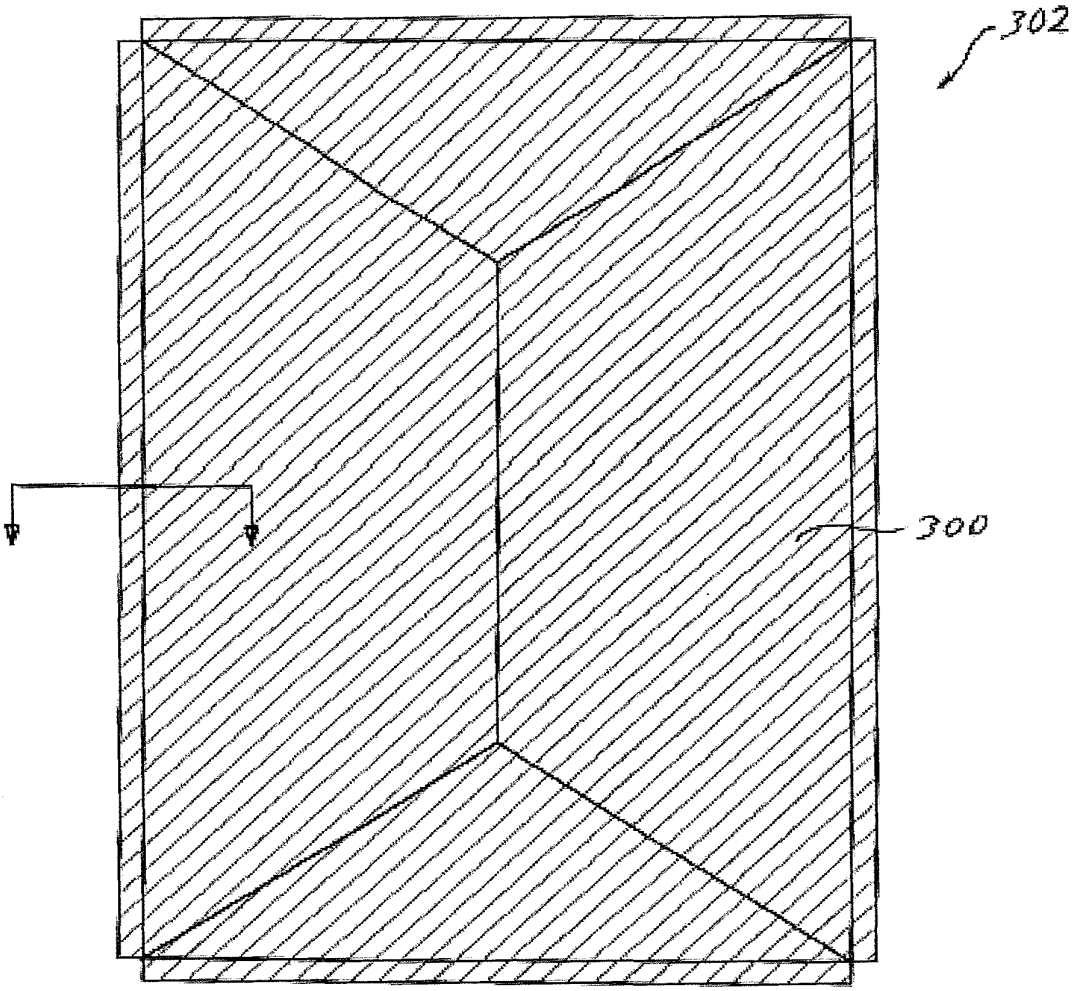

Fig. 16

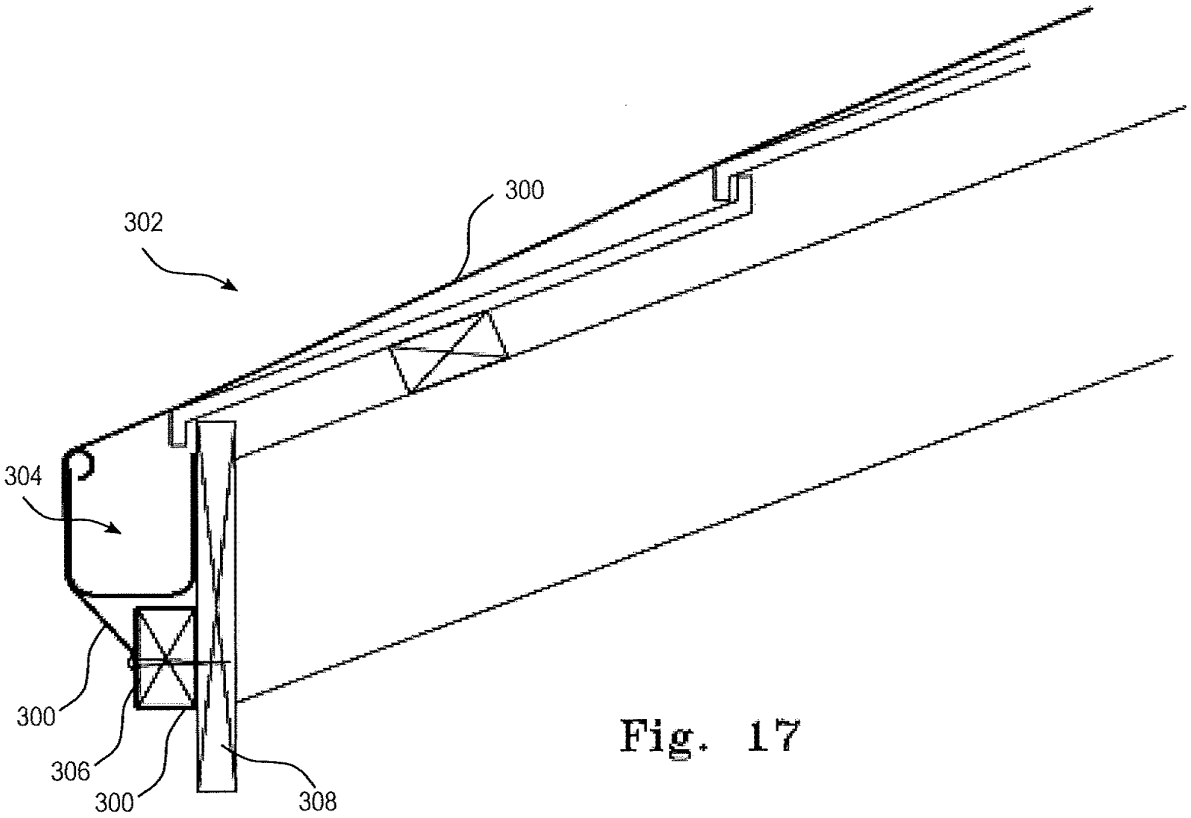

Fig. 17

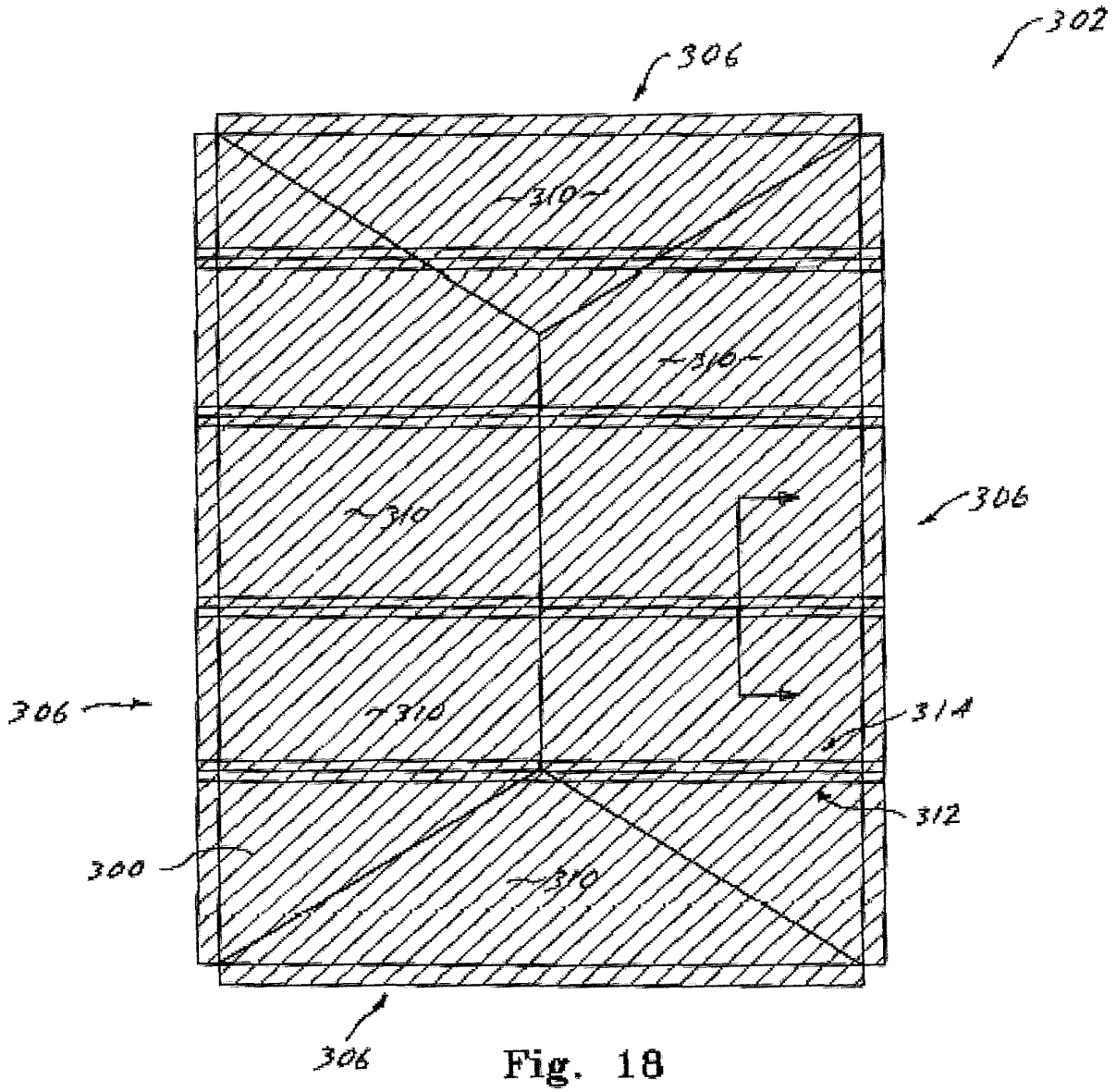
302
306
310
310
310
306
306
310
314
312
300
310
306

Fig. 18

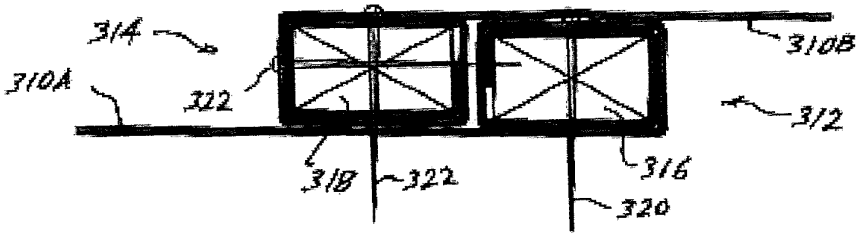
314
310B
310A
322
312
318
322
316
320

Fig. 19

Doc code: Oath
Document Description: Oath or declaration filed

PTO/AIA/02 (07-13)
Approved for use through 04/30/2017. OMB 0651-0032
U.S. Patent and Trademark Office; U.S. DEPARTMENT OF COMMERCE
Under the Paperwork Reduction Act of 1995, no persons are required to respond to a collection of information unless it displays a valid OMB control number

SUBSTITUTE STATEMENT IN LIEU OF AN OATH OR DECLARATION FOR UTILITY OR DESIGN PATENT APPLICATION (35 U.S.C. 115(d) AND 37 CFR 1.64)

Title of Invention: ROOF AND WALL COVER SYSTEM

This statement is directed to:

☐ The attached application,

OR

☒ United States application or PCT international application number 15/783813 filed on October 13, 2017

LEGAL NAME of inventor to whom this substitute statement applies:

(E.g., Given Name (first and middle (if any)) and Family Name or Surname)

Rodney Burge

Residence (except for a deceased or legally incapacitated inventor):

City Miranda | State | Country AU

Mailing Address (except for a deceased or legally incapacitated inventor):

205/213 Port Hacking Road

City Miranda | State | Zip NSW 2228 | Country AU

I believe the above-named inventor or joint inventor to be the original inventor or an original joint inventor of a claimed invention in the application.

The above-identified application was made or authorized to be made by me

I hereby acknowledge that any willful false statement made in this statement is punishable under 18 U.S.C. 1001 by fine or imprisonment of not more than five (5) years, or both.

Relationship to the inventor to whom this substitute statement applies:

- ☐ Legal Representative (for deceased or legally incapacitated inventor only),
- ☒ Assignee,
- ☐ Person to whom the inventor is under an obligation to assign,
- ☐ Person who otherwise shows a sufficient proprietary interest in the matter (petition under 37 CFR 1.46 is required), or
- ☐ Joint Inventor,

This collection of information is required by 35 U.S.C. 115 and 37 CFR 1.63. The information is required to obtain or retain a benefit by the public which is to file (and by the USPTO to process) an application. Confidentiality is governed by 35 U.S.C. 122 and 37 CFR 1.11 and 1.14. This collection is estimated to take 1 minute to complete, including gathering, preparing, and submitting the completed application form to the USPTO. Time will vary depending upon the individual case. Any comments on the amount of time you require to complete this form and/or suggestions for reducing this burden, should be sent to the Chief Information Officer, U.S. Patent and Trademark Office, U.S. Department of Commerce, P.O. Box 1450, Alexandria, VA 22313-1450. DO NOT SEND FEES OR COMPLETED FORMS TO THIS ADDRESS. **SEND TO: Commissioner for Patents, P.O. Box 1450, Alexandria, VA 22313-1450.**

If you need assistance in completing the form, call 1-800-PTO-9199 and select option 2.

Under the Paperwork Reduction Act of 1995, no persons are required to respond to a collection of information unless it displays a valid OMB control number.

SUBSTITUTE STATEMENT

Circumstances permitting execution of this substitute statement:

- [ ] Inventor is deceased.
- [ ] Inventor is under legal incapacity.
- [x] Inventor cannot be found or reached after diligent effort, or
- [ ] Inventor has refused to execute the oath or declaration under 37 CFR 1.63.

If there are joint inventors, please check the appropriate box below:

- [x] An application data sheet under 37 CFR 1.76 (PTO/AIA/14 or equivalent) naming the entire inventive entity has been or is currently submitted.

OR

- [ ] An application data sheet under 37 CFR 1.76 (PTO/AIA/14 or equivalent) has not been submitted. Thus, a Substitute Statement Supplemental Sheet (PTO/AIA/11 or equivalent) naming the entire inventive entity and providing inventor information is attached. See 37 CFR 1.64(b).

WARNING:

Petitioner/applicant is cautioned to avoid submitting personal information in documents filed in a patent application that may contribute to identity theft. Personal information such as social security numbers, bank account numbers, or credit card numbers (other than a check or credit card authorization form PTO-2038 submitted for payment purposes) is never required by the USPTO to support a petition or an application. If this type of personal information is included in documents submitted to the USPTO, petitioners/applicants should consider redacting such personal information from the documents before submitting them to the USPTO. Petitioner/applicant is advised that the record of a patent application is available to the public after publication of the application (unless a non-publication request in compliance with 37 CFR 1.213(a) is made in the application) or issuance of a patent. Furthermore, the record from an abandoned application may also be available to the public if the application is referenced in a published application or an issued patent (see 37 CFR 1.14). Checks and credit card authorization forms PTO-2038 submitted for payment purposes are not retained in the application file and therefore are not publicly available.

PERSON EXECUTING THIS SUBSTITUTE STATEMENT:

Name: Matthew Lennox	Date (Optional):
Signature:	

APPLICANT NAME AND TITLE OF PERSON EXECUTING THIS SUBSTITUTE STATEMENT:

If the applicant is a juristic entity, list the applicant name and the title of the signer:

Applicant Name:

Title of Person Executing
This Substitute Statement:

The signer, whose title is supplied above, is authorized to act on behalf of the applicant.

Residence of the signer (unless provided in an application data sheet, PTO/AIA/14 or equivalent):

City	State	Country

Mailing Address of the signer (unless provided in an application data sheet, PTO/AIA/14 or equivalent)

City	State	Zip	Country

Note: Use an additional PTO/AIA/02 form for each inventor who is deceased, legally incapacitated, cannot be found or reached after diligent effort, or has refused to execute the oath or declaration under 37 CFR 1.63.

Privacy Act Statement

The **Privacy Act of 1974 (P.L. 93-579)** requires that you be given certain information in connection with your submission of the attached form related to a patent application or patent. Accordingly, pursuant to the requirements of the Act, please be advised that: (1) the general authority for the collection of this information is 35 U.S.C. 2(b)(2); (2) furnishing of the information solicited is voluntary; and (3) the principal purpose for which the information is used by the U.S. Patent and Trademark Office is to process and/or examine your submission related to a patent application or patent. If you do not furnish the requested information, the U.S. Patent and Trademark Office may not be able to process and/or examine your submission, which may result in termination of proceedings or abandonment of the application or expiration of the patent.

The information provided by you in this form will be subject to the following routine uses:

1. The information on this form will be treated confidentially to the extent allowed under the Freedom of Information Act (5 U.S.C. 552) and the Privacy Act (5 U.S.C 552a). Records from this system of records may be disclosed to the Department of Justice to determine whether disclosure of these records is required by the Freedom of Information Act.
2. A record from this system of records may be disclosed, as a routine use, in the course of presenting evidence to a court, magistrate, or administrative tribunal, including disclosures to opposing counsel in the course of settlement negotiations.
3. A record in this system of records may be disclosed, as a routine use, to a Member of Congress submitting a request involving an individual, to whom the record pertains, when the individual has requested assistance from the Member with respect to the subject matter of the record.
4. A record in this system of records may be disclosed, as a routine use, to a contractor of the Agency having need for the information in order to perform a contract. Recipients of information shall be required to comply with the requirements of the Privacy Act of 1974, as amended, pursuant to 5 U.S.C. 552a(m).
5. A record related to an International Application filed under the Patent Cooperation Treaty in this system of records may be disclosed, as a routine use, to the International Bureau of the World Intellectual Property Organization, pursuant to the Patent Cooperation Treaty.
6. A record in this system of records may be disclosed, as a routine use, to another federal agency for purposes of National Security review (35 U.S.C. 181) and for review pursuant to the Atomic Energy Act (42 U.S.C. 218(c)).
7. A record from this system of records may be disclosed, as a routine use, to the Administrator, General Services, or his/her designee, during an inspection of records conducted by GSA as part of that agency's responsibility to recommend improvements in records management practices and programs, under authority of 44 U.S.C. 2904 and 2906. Such disclosure shall be made in accordance with the GSA regulations governing inspection of records for this purpose, and any other relevant (*i.e.*, GSA or Commerce) directive. Such disclosure shall not be used to make determinations about individuals.
8. A record from this system of records may be disclosed, as a routine use, to the public after either publication of the application pursuant to 35 U.S.C. 122(b) or issuance of a patent pursuant to 35 U.S.C. 151. Further, a record may be disclosed, subject to the limitations of 37 CFR 1.14, as a routine use, to the public if the record was filed in an application which became abandoned or in which the proceedings were terminated and which application is referenced by either a published application, an application open to public inspection or an issued patent.
9. A record from this system of records may be disclosed, as a routine use, to a Federal, State, or local law enforcement agency, if the USPTO becomes aware of a violation or potential violation of law or regulation.

PTO/AIA/01 (06-12)
Approved for use through 01/31/2014. OMB 0651-0032
U.S. Patent and Trademark Office; U.S. DEPARTMENT OF COMMERCE
Under the Paperwork Reduction Act of 1995, no persons are required to respond to a collection of information unless it displays a valid OMB control number.

DECLARATION (37 CFR 1.63) FOR UTILITY OR DESIGN APPLICATION USING AN APPLICATION DATA SHEET (37 CFR 1.76)

Title of Invention	ROOF AND WALL COVER SYSTEM

As the below named inventor, I hereby declare that:

This declaration is directed to:

☐ The attached application, or

☒ United States application or PCT international application number 15/783813 filed on October 13, 2017.

The above-identified application was made or authorized to be made by me.

I believe that I am the original inventor or an original joint inventor of a claimed invention in the application.

I hereby acknowledge that any willful false statement made in this declaration is punishable under 18 U.S.C. 1001 by fine or imprisonment of not more than five (5) years, or both.

WARNING:

Petitioner/applicant is cautioned to avoid submitting personal information in documents filed in a patent application that may contribute to identity theft. Personal information such as social security numbers, bank account numbers, or credit card numbers (other than a check or credit card authorization form PTO-2038 submitted for payment purposes) is never required by the USPTO to support a petition or an application. If this type of personal information is included in documents submitted to the USPTO, petitioners/applicants should consider redacting such personal information from the documents before submitting them to the USPTO. Petitioner/applicant is advised that the record of a patent application is available to the public after publication of the application (unless a non-publication request in compliance with 37 CFR 1.213(a) is made in the application) or issuance of a patent. Furthermore, the record from an abandoned application may also be available to the public if the application is referenced in a published application or an issued patent (see 37 CFR 1.14). Checks and credit card authorization forms PTO-2038 submitted for payment purposes are not retained in the application file and therefore are not publicly available.

LEGAL NAME OF INVENTOR

Inventor: Matthew Lennox Date (Optional) 1/3/2018

Signature: [signature]

Note: An application data sheet (PTO/SB/14 or equivalent), including naming the entire inventive entity, must accompany this form or must have been previously filed. Use an additional PTO/AIA/01 form for each additional inventor.

This collection of information is required by 35 U.S.C. 115 and 37 CFR 1.63. The information is required to obtain or retain a benefit by the public which is to file (and by the USPTO to process) an application. Confidentiality is governed by 35 U.S.C. 122 and 37 CFR 1.11 and 1.14. This collection is estimated to take 1 minute to complete, including gathering, preparing, and submitting the completed application form to the USPTO. Time will vary depending upon the individual case. Any comments on the amount of time you require to complete this form and/or suggestions for reducing this burden, should be sent to the Chief Information Officer, U.S. Patent and Trademark Office, U.S. Department of Commerce, P.O. Box 1450, Alexandria, VA 22313-1450. DO NOT SEND FEES OR COMPLETED FORMS TO THIS ADDRESS. **SEND TO: Commissioner for Patents, P.O. Box 1450, Alexandria, VA 22313-1450.**

If you need assistance in completing the form, call 1-800-PTO-9199 and select option 2.

Privacy Act Statement

The **Privacy Act of 1974 (P.L. 93-579)** requires that you be given certain information in connection with your submission of the attached form related to a patent application or patent. Accordingly, pursuant to the requirements of the Act, please be advised that: (1) the general authority for the collection of this information is 35 U.S.C. 2(b)(2); (2) furnishing of the information solicited is voluntary; and (3) the principal purpose for which the information is used by the U.S. Patent and Trademark Office is to process and/or examine your submission related to a patent application or patent. If you do not furnish the requested information, the U.S. Patent and Trademark Office may not be able to process and/or examine your submission, which may result in termination of proceedings or abandonment of the application or expiration of the patent.

The information provided by you in this form will be subject to the following routine uses:

1. The information on this form will be treated confidentially to the extent allowed under the Freedom of Information Act (5 U.S.C. 552) and the Privacy Act (5 U.S.C 552a). Records from this system of records may be disclosed to the Department of Justice to determine whether disclosure of these records is required by the Freedom of Information Act.
2. A record from this system of records may be disclosed, as a routine use, in the course of presenting evidence to a court, magistrate, or administrative tribunal, including disclosures to opposing counsel in the course of settlement negotiations.
3. A record in this system of records may be disclosed, as a routine use, to a Member of Congress submitting a request involving an individual, to whom the record pertains, when the individual has requested assistance from the Member with respect to the subject matter of the record.
4. A record in this system of records may be disclosed, as a routine use, to a contractor of the Agency having need for the information in order to perform a contract. Recipients of information shall be required to comply with the requirements of the Privacy Act of 1974, as amended, pursuant to 5 U.S.C. 552a(m).
5. A record related to an International Application filed under the Patent Cooperation Treaty in this system of records may be disclosed, as a routine use, to the International Bureau of the World Intellectual Property Organization, pursuant to the Patent Cooperation Treaty.
6. A record in this system of records may be disclosed, as a routine use, to another federal agency for purposes of National Security review (35 U.S.C. 181) and for review pursuant to the Atomic Energy Act (42 U.S.C. 218(c)).
7. A record from this system of records may be disclosed, as a routine use, to the Administrator, General Services, or his/her designee, during an inspection of records conducted by GSA as part of that agency's responsibility to recommend improvements in records management practices and programs, under authority of 44 U.S.C. 2904 and 2906. Such disclosure shall be made in accordance with the GSA regulations governing inspection of records for this purpose, and any other relevant (*i.e.*, GSA or Commerce) directive. Such disclosure shall not be used to make determinations about individuals.
8. A record from this system of records may be disclosed, as a routine use, to the public after either publication of the application pursuant to 35 U.S.C. 122(b) or issuance of a patent pursuant to 35 U.S.C. 151. Further, a record may be disclosed, subject to the limitations of 37 CFR 1.14, as a routine use, to the public if the record was filed in an application which became abandoned or in which the proceedings were terminated and which application is referenced by either a published application, an application open to public inspection or an issued patent.
9. A record from this system of records may be disclosed, as a routine use, to a Federal, State, or local law enforcement agency, if the USPTO becomes aware of a violation or potential violation of law or regulation.

Doc code: Oath
Document Description: Oath or declaration filed

PTO/AIA/02 (07-13)
Approved for use through 04/30/2017. OMB 0651-0032
U.S. Patent and Trademark Office; U.S. DEPARTMENT OF COMMERCE
Under the Paperwork Reduction Act of 1995, no persons are required to respond to a collection of information unless it displays a valid OMB control number.

SUBSTITUTE STATEMENT IN LIEU OF AN OATH OR DECLARATION FOR UTILITY OR DESIGN PATENT APPLICATION (35 U.S.C. 115(d) AND 37 CFR 1.64)

Title of Invention: ROOF AND WALL COVER SYSTEM

This statement is directed to:

☐ The attached application.

OR

☒ United States application or PCT international application number 15/783813 filed on October 13, 2017.

LEGAL NAME of inventor to whom this substitute statement applies:

(*E.g.*, Given Name (first and middle (if any)) and Family Name or Surname)

Adam Farrow

Residence (except for a deceased or legally incapacitated inventor):

City	State	Country
Miranda		AU

Mailing Address (except for a deceased or legally incapacitated inventor):

205/213 Port Hacking Road

City	State	Zip	Country
Miranda		NSW 2228	AU

I believe the above-named inventor or joint inventor to be the original inventor or an original joint inventor of a claimed invention in the application.

The above-identified application was made or authorized to be made by me.

I hereby acknowledge that any willful false statement made in this statement is punishable under 18 U.S.C. 1001 by fine or imprisonment of not more than five (5) years, or both.

Relationship to the inventor to whom this substitute statement applies:

- ☐ Legal Representative (for deceased or legally incapacitated inventor only).
- ☒ Assignee.
- ☐ Person to whom the inventor is under an obligation to assign.
- ☐ Person who otherwise shows a sufficient proprietary interest in the matter (petition under 37 CFR 1.46 is required), or
- ☐ Joint inventor.

This collection of information is required by 35 U.S.C. 115 and 37 CFR 1.63. The information is required to obtain or retain a benefit by the public which is to file (and by the USPTO to process) an application. Confidentiality is governed by 35 U.S.C. 122 and 37 CFR 1.11 and 1.14. This collection is estimated to take 1 minute to complete, including gathering, preparing, and submitting the completed application form to the USPTO. Time will vary depending upon the individual case. Any comments on the amount of time you require to complete this form and/or suggestions for reducing this burden, should be sent to the Chief Information Officer, U.S. Patent and Trademark Office, U.S. Department of Commerce, P.O. Box 1450, Alexandria, VA 22313-1450. DO NOT SEND FEES OR COMPLETED FORMS TO THIS ADDRESS. **SEND TO: Commissioner for Patents, P.O. Box 1450, Alexandria, VA 22313-1450.**

If you need assistance in completing the form, call 1-800-PTO-9199 and select option 2.

Under the Paperwork Reduction Act of 1995, no persons are required to respond to a collection of information unless it displays a valid OMB control number.

SUBSTITUTE STATEMENT

Circumstances permitting execution of this substitute statement:

- [ ] Inventor is deceased.
- [ ] Inventor is under legal incapacity.
- [x] Inventor cannot be found or reached after diligent effort, or
- [ ] Inventor has refused to execute the oath or declaration under 37 CFR 1.63.

If there are joint inventors, please check the appropriate box below:

- [x] An application data sheet under 37 CFR 1.76 (PTO/AIA/14 or equivalent) naming the entire inventive entity has been or is currently submitted.

OR

- [ ] An application data sheet under 37 CFR 1.76 (PTO/AIA/14 or equivalent) has not been submitted. Thus, a Substitute Statement Supplemental Sheet (PTO/AIA/11 or equivalent) naming the entire inventive entity and providing inventor information is attached. See 37 CFR 1.64(b).

WARNING:

Petitioner/applicant is cautioned to avoid submitting personal information in documents filed in a patent application that may contribute to identity theft. Personal information such as social security numbers, bank account numbers, or credit card numbers (other than a check or credit card authorization form PTO-2038 submitted for payment purposes) is never required by the USPTO to support a petition or an application. If this type of personal information is included in documents submitted to the USPTO, petitioners/applicants should consider redacting such personal information from the documents before submitting them to the USPTO. Petitioner/applicant is advised that the record of a patent application is available to the public after publication of the application (unless a non-publication request in compliance with 37 CFR 1.213(a) is made in the application) or issuance of a patent. Furthermore, the record from an abandoned application may also be available to the public if the application is referenced in a published application or an issued patent (see 37 CFR 1.14). Checks and credit card authorization forms PTO-2038 submitted for payment purposes are not retained in the application file and therefore are not publicly available.

PERSON EXECUTING THIS SUBSTITUTE STATEMENT:

Name: Matthew Lennox	Date (Optional):
Signature:	

APPLICANT NAME AND TITLE OF PERSON EXECUTING THIS SUBSTITUTE STATEMENT:

If the applicant is a juristic entity, list the applicant name and the title of the signer:

Applicant Name:

Title of Person Executing
This Substitute Statement:

The signer, whose title is supplied above, is authorized to act on behalf of the applicant.

Residence of the signer (unless provided in an application data sheet, PTO/AIA/14 or equivalent):

City	State	Country

Mailing Address of the signer (unless provided in an application data sheet, PTO/AIA/14 or equivalent)

City	State	Zip	Country

Note: Use an additional PTO/AIA/02 form for each inventor who is deceased, legally incapacitated, cannot be found or reached after diligent effort, or has refused to execute the oath or declaration under 37 CFR 1.63.

Privacy Act Statement

The **Privacy Act of 1974 (P.L. 93-579)** requires that you be given certain information in connection with your submission of the attached form related to a patent application or patent. Accordingly, pursuant to the requirements of the Act, please be advised that: (1) the general authority for the collection of this information is 35 U.S.C. 2(b)(2); (2) furnishing of the information solicited is voluntary; and (3) the principal purpose for which the information is used by the U.S. Patent and Trademark Office is to process and/or examine your submission related to a patent application or patent. If you do not furnish the requested information, the U.S. Patent and Trademark Office may not be able to process and/or examine your submission, which may result in termination of proceedings or abandonment of the application or expiration of the patent.

The information provided by you in this form will be subject to the following routine uses:

1. The information on this form will be treated confidentially to the extent allowed under the Freedom of Information Act (5 U.S.C. 552) and the Privacy Act (5 U.S.C 552a). Records from this system of records may be disclosed to the Department of Justice to determine whether disclosure of these records is required by the Freedom of Information Act.
2. A record from this system of records may be disclosed, as a routine use, in the course of presenting evidence to a court, magistrate, or administrative tribunal, including disclosures to opposing counsel in the course of settlement negotiations.
3. A record in this system of records may be disclosed, as a routine use, to a Member of Congress submitting a request involving an individual, to whom the record pertains, when the individual has requested assistance from the Member with respect to the subject matter of the record.
4. A record in this system of records may be disclosed, as a routine use, to a contractor of the Agency having need for the information in order to perform a contract. Recipients of information shall be required to comply with the requirements of the Privacy Act of 1974, as amended, pursuant to 5 U.S.C. 552a(m).
5. A record related to an International Application filed under the Patent Cooperation Treaty in this system of records may be disclosed, as a routine use, to the International Bureau of the World Intellectual Property Organization, pursuant to the Patent Cooperation Treaty.
6. A record in this system of records may be disclosed, as a routine use, to another federal agency for purposes of National Security review (35 U.S.C. 181) and for review pursuant to the Atomic Energy Act (42 U.S.C. 218(c)).
7. A record from this system of records may be disclosed, as a routine use, to the Administrator, General Services, or his/her designee, during an inspection of records conducted by GSA as part of that agency's responsibility to recommend improvements in records management practices and programs, under authority of 44 U.S.C. 2904 and 2906. Such disclosure shall be made in accordance with the GSA regulations governing inspection of records for this purpose, and any other relevant (*i.e.*, GSA or Commerce) directive. Such disclosure shall not be used to make determinations about individuals.
8. A record from this system of records may be disclosed, as a routine use, to the public after either publication of the application pursuant to 35 U.S.C. 122(b) or issuance of a patent pursuant to 35 U.S.C. 151. Further, a record may be disclosed, subject to the limitations of 37 CFR 1.14, as a routine use, to the public if the record was filed in an application which became abandoned or in which the proceedings were terminated and which application is referenced by either a published application, an application open to public inspection or an issued patent.
9. A record from this system of records may be disclosed, as a routine use, to a Federal, State, or local law enforcement agency, if the USPTO becomes aware of a violation or potential violation of law or regulation.

PTO/AIA/01 (06-12)
Approved for use through 11/30/2020. OMB 0651-0032
U.S. Patent and Trademark Office; U.S. DEPARTMENT OF COMMERCE
Under the Paperwork Reduction Act of 1995, no persons are required to respond to a collection of information unless it displays a valid OMB control number.

DECLARATION (37 CFR 1.63) FOR UTILITY OR DESIGN APPLICATION USING AN APPLICATION DATA SHEET (37 CFR 1.76)

Title of Invention ~~ROOF AND WALL COVER SYSTEM~~
HEAT SHRINK COVERING OF BUILT STRUCTURES AND METHOD

As the below named inventor, I hereby declare that:

This declaration is directed to:

- [x] The attached application, or
- [ ] United States application or PCT international application number _____

filed on _____

The above-identified application was made or authorized to be made by me.

I believe that I am the original inventor or an original joint inventor of a claimed invention in the application.

I hereby acknowledge that any willful false statement made in this declaration is punishable under 18 U.S.C. 1001 by fine or imprisonment of not more than five (5) years, or both.

WARNING:

Petitioner/applicant is cautioned to avoid submitting personal information in documents filed in a patent application that may contribute to identity theft. Personal information such as social security numbers, bank account numbers, or credit card numbers (other than a check or credit card authorization form PTO-2038 submitted for payment purposes) is never required by the USPTO to support a petition or an application. If this type of personal information is included in documents submitted to the USPTO, petitioners/applicants should consider redacting such personal information from the documents before submitting them to the USPTO. Petitioner/applicant is advised that the record of a patent application is available to the public after publication of the application (unless a non-publication request in compliance with 37 CFR 1.213(a) is made in the application) or issuance of a patent. Furthermore, the record from an abandoned application may also be available to the public if the application is referenced in a published application or an issued patent (see 37 CFR 1.14). Checks and credit card authorization forms PTO-2038 submitted for payment purposes are not retained in the application file and therefore are not publicly available.

LEGAL NAME OF INVENTOR

Inventor: Matthew LENNOX Date (Optional) _____

Signature: _____

Note: An application data sheet (PTO/SB/14 or equivalent), including naming the entire inventive entity, must accompany this form or must have been previously filed. Use an additional PTO/AIA/01 form for each additional inventor.

This collection of information is required by 35 U.S.C. 115 and 37 CFR 1.63. The information is required to obtain or retain a benefit by the public which is to file (and by the USPTO to process) an application. Confidentiality is governed by 35 U.S.C. 122 and 37 CFR 1.11 and 1.14. This collection is estimated to take 1 minute to complete, including gathering, preparing, and submitting the completed application form to the USPTO. Time will vary depending upon the individual case. Any comments on the amount of time you require to complete this form and/or suggestions for reducing this burden, should be sent to the Chief Information Officer, U.S. Patent and Trademark Office, U.S. Department of Commerce, P.O. Box 1450, Alexandria, VA 22313-1450. DO NOT SEND FEES OR COMPLETED FORMS TO THIS ADDRESS. **SEND TO: Commissioner for Patents, P.O. Box 1450, Alexandria, VA 22313-1450.**

If you need assistance in completing the form, call 1-800-PTO-9199 and select option 2.

Privacy Act Statement

The **Privacy Act of 1974 (P.L. 93-579)** requires that you be given certain information in connection with your submission of the attached form related to a patent application or patent. Accordingly, pursuant to the requirements of the Act, please be advised that: (1) the general authority for the collection of this information is 35 U.S.C. 2(b)(2); (2) furnishing of the information solicited is voluntary; and (3) the principal purpose for which the information is used by the U.S. Patent and Trademark Office is to process and/or examine your submission related to a patent application or patent. If you do not furnish the requested information, the U.S. Patent and Trademark Office may not be able to process and/or examine your submission, which may result in termination of proceedings or abandonment of the application or expiration of the patent.

The information provided by you in this form will be subject to the following routine uses:

1. The information on this form will be treated confidentially to the extent allowed under the Freedom of Information Act (5 U.S.C. 552) and the Privacy Act (5 U.S.C 552a). Records from this system of records may be disclosed to the Department of Justice to determine whether disclosure of these records is required by the Freedom of Information Act.
2. A record from this system of records may be disclosed, as a routine use, in the course of presenting evidence to a court, magistrate, or administrative tribunal, including disclosures to opposing counsel in the course of settlement negotiations.
3. A record in this system of records may be disclosed, as a routine use, to a Member of Congress submitting a request involving an individual, to whom the record pertains, when the individual has requested assistance from the Member with respect to the subject matter of the record.
4. A record in this system of records may be disclosed, as a routine use, to a contractor of the Agency having need for the information in order to perform a contract. Recipients of information shall be required to comply with the requirements of the Privacy Act of 1974, as amended, pursuant to 5 U.S.C. 552a(m).
5. A record related to an International Application filed under the Patent Cooperation Treaty in this system of records may be disclosed, as a routine use, to the International Bureau of the World Intellectual Property Organization, pursuant to the Patent Cooperation Treaty.
6. A record in this system of records may be disclosed, as a routine use, to another federal agency for purposes of National Security review (35 U.S.C. 181) and for review pursuant to the Atomic Energy Act (42 U.S.C. 218(c)).
7. A record from this system of records may be disclosed, as a routine use, to the Administrator, General Services, or his/her designee, during an inspection of records conducted by GSA as part of that agency's responsibility to recommend improvements in records management practices and programs, under authority of 44 U.S.C. 2904 and 2906. Such disclosure shall be made in accordance with the GSA regulations governing inspection of records for this purpose, and any other relevant (*i.e.*, GSA or Commerce) directive. Such disclosure shall not be used to make determinations about individuals.
8. A record from this system of records may be disclosed, as a routine use, to the public after either publication of the application pursuant to 35 U.S.C. 122(b) or issuance of a patent pursuant to 35 U.S.C. 151. Further, a record may be disclosed, subject to the limitations of 37 CFR 1.14, as a routine use, to the public if the record was filed in an application which became abandoned or in which the proceedings were terminated and which application is referenced by either a published application, an application open to public inspection or an issued patent.
9. A record from this system of records may be disclosed, as a routine use, to a Federal, State, or local law enforcement agency, if the USPTO becomes aware of a violation or potential violation of law or regulation.

IN THE UNITED STATES PATENT AND TRADEMARK OFFICE

In re application of	:	**Confirmation No. TBD**
Matthew LENNOX et al.	:	Attorney Docket No. 2021_01B
Serial No. TBD	:	Group Art Unit No. TBD
Filed October 31, 2022	:	Examiner TBD
ROOF AND WALL COVER SYSTEM	:	

PRELIMINARY AMENDMENT

Commissioner for Patents
P.O. Box 1450
Alexandria, VA 22313-1450

Sir:

Prior to initial examination of the above-identified application, kindly amend the application as follows.

AMENDMENTS TO THE TITLE

Please replace the Title of the Invention with the following therefor:

-- ROOF AND WALL COVER SYSTEM --.

AMENDMENTS TO THE SPECIFICATION

On the first page of the specification directly after the title please insert the following:

--CROSS REFERENCE TO RELATED APPLICATIONS--

On the first page of the specification directly after the heading "CROSS REFERENCE TO RELATED APPLICATIONS" please insert the following:

--This is a continuation application of U.S. patent application Serial No. 17/519,787, filed November 5, 2021, which is a continuation-in-part application of Serial No. 15/783,813, filed October 13, 2017, now U.S. Patent No. 11,168,484, issued November 9, 2021, which is a continuation application of Serial No. 12/995,966, filed May 31, 2011, now U.S. Patent No. 9,822,536, issued November 21, 2017, which is the National Stage of International Application No. PCT/AU2009/000685, filed June 2, 2009, the disclosures of which are incorporated herein by reference.--

AMENDMENTS TO THE CLAIMS

1-17. (Cancelled)

18. (New) A method of covering at least a portion of a roof of a storm damaged built structure comprising the steps of:

applying a length of heat shrinkable film over the portion of the roof, the length of heat shrinkable film having a leading edge and a trailing edge;

wrapping portions of the leading edge around a first batten and attaching the first batten to an underside of a first eave or to a facia of the built structure;

wrapping portions of the trailing edge around a second batten and attaching the second batten to an underside of a second eave or to the facia of the built structure at a location different than the first batten; and

heating the length of heat shrinkable film to bring the film into conformity with a surface of the roof, wherein said heating step shrinks the length of film tight against the roof surface.

19. (New) The method of claim 18 further comprising the steps of:

applying a successive length of heat shrinkable film over the portion of the roof adjacent to the applied length of heat shrinkable film, the applied length and the successive length each having first and second lateral edges, wherein adjacent lateral edges of the lengths of heat shrinkable film overlap; and

heating the overlapping lateral edges to seal the lateral edges to each other and join the lengths of heat shrinkable film together, the joined lengths having a first lateral edge and a second lateral edge.

20. (New) The method of claim 19 further comprising the step of attaching one of the first or second lateral edges of the joined lengths to an edge of the built structure, the edge of the built structure being at a location different than a location of the first and second eaves.

21. (New) The method of claim 18, the heat shrinkable film being a film of low-density polyethylene.

22. (New) The method of claim 18, the heat shrinkable film being a film of low-density polyethylene including shrinking resins.

23. (New) A method of covering at least a damaged portion of a roof of a structure comprising the steps of:

applying a length of heat shrinkable film over the roof to extend from a first edge to a second edge of the roof and to cover the damaged portion of the roof, wherein the length of heat shrinkable film includes a leading edge and a trailing edge;

mechanically attaching the leading and trailing edges to the first and second edges, respectively; and

heating the length of heat shrinkable film to cause the film to conform to a surface of the roof.

24. (New) The method of claim 23, said mechanically attaching step comprising:

wrapping portions of the leading edge around a first batten and attaching the first batten to an underside of a first eave or to a facia of the structure; and

wrapping portions of the trailing edge around a second batten and attaching the second batten to an underside of a second eave or to the facia of the structure at a location different than the first batten.

25. (New) The method of claim 24 further comprising the steps of:

applying a successive length of heat shrinkable film over the roof adjacent to the applied length of heat shrinkable film, the applied and the successive lengths of heat shrinkable film each having first and second lateral edges, wherein adjacent lateral edges of the lengths of heat shrinkable film overlap; and

heating the overlapping lateral edges to seal the lateral edges to each other and to join the lengths of heat shrinkable film together, the joined lengths of heat shrinkable film having a first lateral edge and a second lateral edge.

26. (New) The method of claim 25 further comprising the step of attaching one of the first or second lateral edges of the joined lengths to an edge of the structure, the edge of the structure being at a location different than a location of the first and second edges.

27. (New) The method of claim 23, the heat shrinkable film being a film of low-density polyethylene.

28. (New) The method of claim 23, the heat shrinkable film being a film of low-density polyethylene including shrinking resins.

29. (New) A roof cover system comprising:

a roof of a structure, the roof having a damaged portion, a first roof edge and a second roof edge; and

a length of heat shrinkable film applied over the roof, the length of heat shrinkable film extending from the first roof edge to the second roof edge and covering the damaged portion, the length of heat shrinkable film including a leading edge and a trailing edge, the leading edge and the trailing edge being mechanically attached to the first and second roof edges, respectively, the length of heat shrinkable film conforming to a surface of the roof due to application of heat.

30. (New) The roof cover system according to claim 29, wherein:

the first roof edge includes a first eave having an underside and the second roof edge includes a second eave having an underside;

the leading edge is wrapped around a first batten, the first batten being mechanically attached to the underside of the first eave or to a facia of the structure; and

the trailing edge is wrapped around a second batten, the second batten being mechanically attached to the underside of the second eave or to the facia of the structure at a location different than the first batten.

31. (New) The roof cover system according to claim 29, further comprising a successive length of heat shrinkable film positioned on the roof adjacent to the applied length of heat shrinkable film, the applied and the successive lengths of heat shrinkable film each have first and second

lateral edges, wherein adjacent lateral edges of the lengths of heat shrinkable film overlap and are heat sealed together to join the lengths together, the joined lengths have a first lateral edge and a second lateral edge.

32. (New) The roof cover system according to claim 31, wherein one of the first or second lateral edges of the joined lengths is attached to an edge of the structure, the edge of the structure being at a location different than a location of the first and second roof edges.

33. (New) The roof cover system according to claim 29, wherein the heat shrinkable film is a film of low-density polyethylene.

34. (New) The roof cover system according to claim 29, wherein the heat shrinkable film is a film of low-density polyethylene including shrinking resins.

REMARKS

Please enter the above amendments prior to consideration of the merits of the present application. By this amendment, claims 1-17 are cancelled and claims 18-34 are added. Accordingly, claims 18-34 are currently pending in the application.

If there are any issues that the Examiner feels may best be resolved through a personal or telephone interview, the Examiner is kindly requested to contact the undersigned at the telephone number listed below.

Respectfully submitted,

Matthew LENNOX, et al.

By: /Kevin McDermot/
Kevin McDermott
Registration No. 48,113
Attorney for Applicants

Alexandria, VA 22314
Telephone (703) 380-1795
October 31, 2022

Doc Code: PA..
Document Description: Power of Attorney

PTO/AIA/82A (07-13)
Approved for use through 03/31/2021. OMB 0651-0035
U.S. Patent and Trademark Office; U.S. DEPARTMENT OF COMMERCE
Under the Paperwork Reduction Act of 1995, no persons are required to respond to a collection of information unless it displays a valid OMB control number.

TRANSMITTAL FOR POWER OF ATTORNEY TO ONE OR MORE REGISTERED PRACTITIONERS

NOTE: This form is to be submitted with the Power of Attorney by Applicant form (PTO/AIA/82B) to identify the application to which the Power of Attorney is directed, in accordance with 37 CFR 1.5, unless the application number and filing date are identified in the Power of Attorney by Applicant form. If neither form PTO/AIA/82A nor form PTO/AIA82B identifies the application to which the Power of Attorney is directed, the Power of Attorney will not be recognized in the application.

Application Number	15/783,813
Filing Date	October 13, 2017
First Named Inventor	Matthew LENNOX
Title	ROOF AND WALL COVER SYSTEM
Art Unit	1746
Examiner Name	Carson Gross
Attorney Docket Number	2021_01A

SIGNATURE of Applicant or Patent Practitioner

Signature	/Kevin McDermott/	Date (Optional)	June 7, 2021
Name	Kevin McDermott	Registration Number	48,113
Title (if Applicant is a juristic entity)			
Applicant Name (if Applicant is a juristic entity)			

NOTE: This form must be signed in accordance with 37 CFR 1.33. See 37 CFR 1.4(d) for signature requirements and certifications. If more than one applicant, use multiple forms.

☑ *Total of 1 forms are submitted.

This collection of information is required by 37 CFR 1.131, 1.32, and 1.33. The information is required to obtain or retain a benefit by the public which is to file (and by the USPTO to process) an application. Confidentiality is governed by 35 U.S.C. 122 and 37 CFR 1.11 and 1.14. This collection is estimated to take 3 minutes to complete, including gathering, preparing, and submitting the completed application form to the USPTO. Time will vary depending upon the individual case. Any comments on the amount of time you require to complete this form and/or suggestions for reducing this burden, should be sent to the Chief Information Officer, U.S. Patent and Trademark Office, U.S. Department of Commerce, P.O. Box 1450, Alexandria, VA 22313-1450. DO NOT SEND FEES OR COMPLETED FORMS TO THIS ADDRESS. **SEND TO: Commissioner for Patents, P.O. Box 1450, Alexandria, VA 22313-1450.**

If you need assistance in completing the form, call 1-800-PTO-9199 and select option 2.

Doc Code: PA..
Document Description: Power of Attorney

PTO/AIA/82B (07-13)
Approved for use through 03/31/2021. OMB 0651-0035
U.S. Patent and Trademark Office; U.S. DEPARTMENT OF COMMERCE
Under the Paperwork Reduction Act of 1995, no persons are required to respond to a collection of information unless it displays a valid OMB control number

POWER OF ATTORNEY BY APPLICANT

I hereby revoke all previous powers of attorney given in the application identified in either the attached transmittal letter or the boxes below.

Application Number	Filing Date
15/783,813	October 13, 2017

(Note: The boxes above may be left blank if information is provided on form PTO/AIA/82A.)

☑ I hereby appoint the Patent Practitioner(s) associated with the following Customer Number as my/our attorney(s) or agent(s), and to transact all business in the United States Patent and Trademark Office connected therewith for the application referenced in the attached transmittal letter (form PTO/AIA/82A) or identified above: 130554

OR

☐ I hereby appoint Practitioner(s) named in the attached list (form PTO/AIA/82C) as my/our attorney(s) or agent(s), and to transact all business in the United States Patent and Trademark Office connected therewith for the patent application referenced in the attached transmittal letter (form PTO/AIA/82A) or identified above. (Note: Complete form PTO/AIA/82C.)

Please recognize or change the correspondence address for the application identified in the attached transmittal letter or the boxes above to:

☑ The address associated with the above-mentioned Customer Number

OR

☐ The address associated with Customer Number:

OR

☐ Firm or Individual Name					
Address					
City		State		Zip	
Country					
Telephone		Email			

I am the Applicant (if the Applicant is a juristic entity, list the Applicant name in the box):

SYSTEM STORMSEAL PTY LTD

☐ Inventor or Joint Inventor (title not required below)

☐ Legal Representative of a Deceased or Legally Incapacitated Inventor (title not required below)

☑ Assignee or Person to Whom the Inventor is Under an Obligation to Assign (provide signer's title if applicant is a juristic entity)

☐ Person Who Otherwise Shows Sufficient Proprietary Interest (e.g., a petition under 37 CFR 1.46(b)(2) was granted in the application or is concurrently being filed with this document) (provide signer's title if applicant is a juristic entity)

SIGNATURE of Applicant for Patent

The undersigned (whose title is supplied below) is authorized to act on behalf of the applicant (e.g., where the applicant is a juristic entity).

Signature		Date (Optional)	
Name	Matthew Lennox		
Title	Managing Director		

NOTE: Signature - This form must be signed by the applicant in accordance with 37 CFR 1.33. See 37 CFR 1.4 for signature requirements and certifications. If more than one applicant, use multiple forms.

☑ Total of 1 forms are submitted.

This collection of information is required by 37 CFR 1.131, 1.32, and 1.33. The information is required to obtain or retain a benefit by the public which is to file (and by the USPTO to process) an application. Confidentiality is governed by 35 U.S.C. 122 and 37 CFR 1.11 and 1.14. This collection is estimated to take 3 minutes to complete, including gathering, preparing, and submitting the completed application form to the USPTO. Time will vary depending upon the individual case. Any comments on the amount of time you require to complete this form and/or suggestions for reducing this burden, should be sent to the Chief Information Officer, U.S. Patent and Trademark Office, U.S. Department of Commerce, P.O. Box 1450, Alexandria, VA 22313-1450. DO NOT SEND FEES OR COMPLETED FORMS TO THIS ADDRESS. **SEND TO: Commissioner for Patents, P.O. Box 1450, Alexandria, VA 22313-1450.**

If you need assistance in completing the form, call 1-800-PTO-9199 and select option 2.

PTO/AIA/82C (07-13)
Approved for use through 03/31/2021. OMB 0651-0035
U.S. Patent and Trademark Office; U.S. DEPARTMENT OF COMMERCE
Under the Paperwork Reduction Act of 1995, no persons are required to respond to a collection of information unless it displays a valid OMB control number

POWER OF ATTORNEY BY APPLICANT

No more than ten (10) patent practitioners total may be appointed as set forth below by name and registration number. This page need not be submitted if appointing the Patent Practitioner(s) associated with a Customer Number (see form PTO/AIA/82B):

Name	Registration Number

Privacy Act Statement

The **Privacy Act of 1974 (P.L. 93-579)** requires that you be given certain information in connection with your submission of the attached form related to a patent application or patent. Accordingly, pursuant to the requirements of the Act, please be advised that: (1) the general authority for the collection of this information is 35 U.S.C. 2(b)(2); (2) furnishing of the information solicited is voluntary; and (3) the principal purpose for which the information is used by the U.S. Patent and Trademark Office is to process and/or examine your submission related to a patent application or patent. If you do not furnish the requested information, the U.S. Patent and Trademark Office may not be able to process and/or examine your submission, which may result in termination of proceedings or abandonment of the application or expiration of the patent.

The information provided by you in this form will be subject to the following routine uses:

1. The information on this form will be treated confidentially to the extent allowed under the Freedom of Information Act (5 U.S.C. 552) and the Privacy Act (5 U.S.C. 552a). Records from this system of records may be disclosed to the Department of Justice to determine whether the Freedom of Information Act requires disclosure of these records.
2. A record from this system of records may be disclosed, as a routine use, in the course of presenting evidence to a court, magistrate, or administrative tribunal, including disclosures to opposing counsel in the course of settlement negotiations.
3. A record in this system of records may be disclosed, as a routine use, to a Member of Congress submitting a request involving an individual, to whom the record pertains, when the individual has requested assistance from the Member with respect to the subject matter of the record.
4. A record in this system of records may be disclosed, as a routine use, to a contractor of the Agency having need for the information in order to perform a contract. Recipients of information shall be required to comply with the requirements of the Privacy Act of 1974, as amended, pursuant to 5 U.S.C. 552a(m).
5. A record related to an International Application filed under the Patent Cooperation Treaty in this system of records may be disclosed, as a routine use, to the International Bureau of the World Intellectual Property Organization, pursuant to the Patent Cooperation Treaty.
6. A record in this system of records may be disclosed, as a routine use, to another federal agency for purposes of National Security review (35 U.S.C. 181) and for review pursuant to the Atomic Energy Act (42 U.S.C. 218(c)).
7. A record from this system of records may be disclosed, as a routine use, to the Administrator, General Services, or his/her designee, during an inspection of records conducted by GSA as part of that agency's responsibility to recommend improvements in records management practices and programs, under authority of 44 U.S.C. 2904 and 2906. Such disclosure shall be made in accordance with the GSA regulations governing inspection of records for this purpose, and any other relevant (i.e., GSA or Commerce) directive. Such disclosure shall not be used to make determinations about individuals.
8. A record from this system of records may be disclosed, as a routine use, to the public after either publication of the application pursuant to 35 U.S.C. 122(b) or issuance of a patent pursuant to 35 U.S.C. 151. Further, a record may be disclosed, subject to the limitations of 37 CFR 1.14, as a routine use, to the public if the record was filed in an application which became abandoned or in which the proceedings were terminated and which application is referenced by either a published application, an application open to public inspections or an issued patent.
9. A record from this system of records may be disclosed, as a routine use, to a Federal, State, or local law enforcement agency, if the USPTO becomes aware of a violation or potential violation of law or regulation.

Doc Code: PA..
Document Description: Power of Attorney

PTO/AIA/82A (07-13)
Approved for use through 03/31/2021. OMB 0651-0035
U.S. Patent and Trademark Office; U.S. DEPARTMENT OF COMMERCE
Under the Paperwork Reduction Act of 1995, no persons are required to respond to a collection of information unless it displays a valid OMB control number.

TRANSMITTAL FOR POWER OF ATTORNEY TO ONE OR MORE REGISTERED PRACTITIONERS

NOTE: This form is to be submitted with the Power of Attorney by Applicant form (PTO/AIA/62B) to identify the application to which the Power of Attorney is directed, in accordance with 37 CFR 1.5, unless the application number and filing date are identified in the Power of Attorney by Applicant form. If neither form PTO/AIA/82A nor form PTO/AIA82B identifies the application to which the Power of Attorney is directed, the Power of Attorney will not be recognized in the application.

Application Number	TBD
Filing Date	
First Named Inventor	Matthew LENNOX
Title	~~ROOF AND WALL COVER SYSTEM~~ HEAT SHRINK COVERING OF BUILT STRUCTURES AND METHOD
Art Unit	TBD
Examiner Name	TBD
Attorney Docket Number	2021_01CIP

SIGNATURE of Applicant or Patent Practitioner

Signature	/Kevin McDermott/	Date (Optional)	
Name	Kevin McDermott	Registration Number	48113
Title (if Applicant is a juristic entity)			
Applicant Name (if Applicant is a juristic entity)	System Stormseal Pty Ltd		

NOTE: This form must be signed in accordance with 37 CFR 1.33. See 37 CFR 1.4(d) for signature requirements and certifications. If more than one applicant, use multiple forms.

☐ *Total of ..... forms are submitted.

This collection of information is required by 37 CFR 1.131, 1.32, and 1.33. The information is required to obtain or retain a benefit by the public which is to file (and by the USPTO to process) an application. Confidentiality is governed by 35 U.S.C. 122 and 37 CFR 1.11 and 1.14. This collection is estimated to take 3 minutes to complete, including gathering, preparing, and submitting the completed application form to the USPTO. Time will vary depending upon the individual case. Any comments on the amount of time you require to complete this form and/or suggestions for reducing this burden, should be sent to the Chief Information Officer, U.S. Patent and Trademark Office, U.S. Department of Commerce, P.O. Box 1450, Alexandria, VA 22313-1450. DO NOT SEND FEES OR COMPLETED FORMS TO THIS ADDRESS. **SEND TO: Commissioner for Patents, P.O. Box 1450, Alexandria, VA 22313-1450.**

If you need assistance in completing the form, call 1-800-PTO-9199 and select option 2.

Doc Code: PA..
Document Description: Power of Attorney

PTO/AIA/82B (07-13)
Approved for use through 03/31/2021. OMB 0651-0035
U.S. Patent and Trademark Office; U.S. DEPARTMENT OF COMMERCE
Under the Paperwork Reduction Act of 1995, no persons are required to respond to a collection of information unless it displays a valid OMB control number

POWER OF ATTORNEY BY APPLICANT

I hereby revoke all previous powers of attorney given in the application identified in either the attached transmittal letter or the boxes below.

Application Number	Filing Date

(Note: The boxes above may be left blank if information is provided on form PTO/AIA/82A.)

☑ I hereby appoint the Patent Practitioner(s) associated with the following Customer Number as my/our attorney(s) or agent(s), and to transact all business in the United States Patent and Trademark Office connected therewith for the application referenced in the attached transmittal letter (form PTO/AIA/82A) or identified above: 130554

OR

☐ I hereby appoint Practitioner(s) named in the attached list (form PTO/AIA/82C) as my/our attorney(s) or agent(s), and to transact all business in the United States Patent and Trademark Office connected therewith for the patent application referenced in the attached transmittal letter (form PTO/AIA/82A) or identified above. (Note: Complete form PTO/AIA/82C.)

Please recognize or change the correspondence address for the application identified in the attached transmittal letter or the boxes above to:

☑ The address associated with the above-mentioned Customer Number

OR

☐ The address associated with Customer Number:

OR

☐ Firm or Individual Name					
Address					
City		State		Zip	
Country					
Telephone		Email			

I am the Applicant (if the Applicant is a juristic entity, list the Applicant name in the box):

System Stormseal Pty Ltd

☐ Inventor or Joint Inventor (title not required below)

☐ Legal Representative of a Deceased or Legally Incapacitated Inventor (title not required below)

☑ Assignee or Person to Whom the Inventor is Under an Obligation to Assign (provide signer's title if applicant is a juristic entity)

☐ Person Who Otherwise Shows Sufficient Proprietary Interest (e.g., a petition under 37 CFR 1.46(b)(2) was granted in the application or is concurrently being filed with this document) (provide signer's title if applicant is a juristic entity)

SIGNATURE of Applicant for Patent

The undersigned (whose title is supplied below) is authorized to act on behalf of the applicant (e.g., where the applicant is a juristic entity).

Signature		Date (Optional)	
Name	Matthew LE[illegible]OX		
Title	Managing Director		

NOTE: Signature - This form must be signed by the applicant in accordance with 37 CFR 1.33. See 37 CFR 1.4 for signature requirements and certifications. If more than one applicant, use multiple forms.

☐ Total of forms are submitted.

This collection of information is required by 37 CFR 1.131, 1.32, and 1.33. The information is required to obtain or retain a benefit by the public which is to file (and by the USPTO to process) an application. Confidentiality is governed by 35 U.S.C. 122 and 37 CFR 1.11 and 1.14. This collection is estimated to take 3 minutes to complete, including gathering, preparing, and submitting the completed application form to the USPTO. Time will vary depending upon the individual case. Any comments on the amount of time you require to complete this form and/or suggestions for reducing this burden, should be sent to the Chief Information Officer, U.S. Patent and Trademark Office, U.S. Department of Commerce, P.O. Box 1450, Alexandria, VA 22313-1450. DO NOT SEND FEES OR COMPLETED FORMS TO THIS ADDRESS. **SEND TO: Commissioner for Patents, P.O. Box 1450, Alexandria, VA 22313-1450.**

If you need assistance in completing the form, call 1-800-PTO-9199 and select option 2.

PTO/AIA/82C (07-13)
Approved for use through 03/31/2021. OMB 0651-0035
U.S. Patent and Trademark Office; U.S. DEPARTMENT OF COMMERCE
Under the Paperwork Reduction Act of 1995, no persons are required to respond to a collection of information unless it displays a valid OMB control number

POWER OF ATTORNEY BY APPLICANT

No more than ten (10) patent practitioners total may be appointed as set forth below by name and registration number. This page need not be submitted if appointing the Patent Practitioner(s) associated with a Customer Number (see form PTO/AIA/82B).

Name	Registration Number

Privacy Act Statement

The **Privacy Act of 1974 (P.L. 93-579)** requires that you be given certain information in connection with your submission of the attached form related to a patent application or patent. Accordingly, pursuant to the requirements of the Act, please be advised that: (1) the general authority for the collection of this information is 35 U.S.C. 2(b)(2); (2) furnishing of the information solicited is voluntary; and (3) the principal purpose for which the information is used by the U.S. Patent and Trademark Office is to process and/or examine your submission related to a patent application or patent. If you do not furnish the requested information, the U.S. Patent and Trademark Office may not be able to process and/or examine your submission, which may result in termination of proceedings or abandonment of the application or expiration of the patent.

The information provided by you in this form will be subject to the following routine uses:

1. The information on this form will be treated confidentially to the extent allowed under the Freedom of Information Act (5 U.S.C. 552) and the Privacy Act (5 U.S.C. 552a). Records from this system of records may be disclosed to the Department of Justice to determine whether the Freedom of Information Act requires disclosure of these records.
2. A record from this system of records may be disclosed, as a routine use, in the course of presenting evidence to a court, magistrate, or administrative tribunal, including disclosures to opposing counsel in the course of settlement negotiations.
3. A record in this system of records may be disclosed, as a routine use, to a Member of Congress submitting a request involving an individual, to whom the record pertains, when the individual has requested assistance from the Member with respect to the subject matter of the record.
4. A record in this system of records may be disclosed, as a routine use, to a contractor of the Agency having need for the information in order to perform a contract. Recipients of information shall be required to comply with the requirements of the Privacy Act of 1974, as amended, pursuant to 5 U.S.C. 552a(m).
5. A record related to an International Application filed under the Patent Cooperation Treaty in this system of records may be disclosed, as a routine use, to the International Bureau of the World Intellectual Property Organization, pursuant to the Patent Cooperation Treaty.
6. A record in this system of records may be disclosed, as a routine use, to another federal agency for purposes of National Security review (35 U.S.C. 181) and for review pursuant to the Atomic Energy Act (42 U.S.C. 218(c)).
7. A record from this system of records may be disclosed, as a routine use, to the Administrator, General Services, or his/her designee, during an inspection of records conducted by GSA as part of that agency's responsibility to recommend improvements in records management practices and programs, under authority of 44 U.S.C. 2904 and 2906. Such disclosure shall be made in accordance with the GSA regulations governing inspection of records for this purpose, and any other relevant (i.e., GSA or Commerce) directive. Such disclosure shall not be used to make determinations about individuals.
8. A record from this system of records may be disclosed, as a routine use, to the public after either publication of the application pursuant to 35 U.S.C. 122(b) or issuance of a patent pursuant to 35 U.S.C. 151. Further, a record may be disclosed, subject to the limitations of 37 CFR 1.14, as a routine use, to the public if the record was filed in an application which became abandoned or in which the proceedings were terminated and which application is referenced by either a published application, an application open to public inspections or an issued patent.
9. A record from this system of records may be disclosed, as a routine use, to a Federal, State, or local law enforcement agency, if the USPTO becomes aware of a violation or potential violation of law or regulation.

Under the Paperwork Reduction Act of 1995, no persons are required to respond to a collection of information unless it contains a valid OMB control number.

Application Data Sheet 37 CFR 1.76	Attorney Docket Number	2021_01B
	Application Number	
Title of Invention	ROOF AND WALL COVER SYSTEM	

The application data sheet is part of the provisional or nonprovisional application for which it is being submitted. The following form contains the bibliographic data arranged in a format specified by the United States Patent and Trademark Office as outlined in 37 CFR 1.76.
This document may be completed electronically and submitted to the Office in electronic format using the Electronic Filing System (EFS) or the document may be printed and included in a paper filed application.

Secrecy Order 37 CFR 5.2:

☐ Portions or all of the application associated with this Application Data Sheet may fall under a Secrecy Order pursuant to 37 CFR 5.2 (Paper filers only. Applications that fall under Secrecy Order may not be filed electronically.)

Inventor Information:

Inventor 1 Remove

Legal Name

Prefix	Given Name	Middle Name	Family Name	Suffix
Mr.	Matthew		LENNOX	

Residence Information (Select One) US Residency ● Non US Residency Active US Military Service

City	Cronulla	Country of Residence i	AU

Mailing Address of Inventor:

Address 1	43 Parramatta Street		
Address 2			
City	Cronulla	State/Province	
Postal Code	2230	Country i	AU

Inventor 2 Remove

Legal Name

Prefix	Given Name	Middle Name	Family Name	Suffix
Mr.	Rodney		BURGE	

Residence Information (Select One) US Residency ◉ Non US Residency Active US Military Service

City	Miranda	Country of Residence i	AU

Mailing Address of Inventor:

Address 1	Unit 27		
Address 2	205/213 Port Hacking Road		
City	Miranda	State/Province	
Postal Code	NSW 2228	Country i	AU

Inventor 3 Remove

Legal Name

Under the Paperwork Reduction Act of 1995, no persons are required to respond to a collection of information unless it contains a valid OMB control number.

Application Data Sheet 37 CFR 1.76	Attorney Docket Number	2021_01B
	Application Number	
Title of Invention	ROOF AND WALL COVER SYSTEM	

Prefix	Given Name	Middle Name	Family Name	Suffix
Mr.	Adam		FARROW	

Residence Information (Select One) US Residency ◉ Non US Residency Active US Military Service

City	Miranda	Country of Residence i	AU

Mailing Address of Inventor:

Address 1	Unit 27		
Address 2	205/213 Port Hacking Road		
City	Miranda	**State/Province**	
Postal Code	NSW 2228	**Country** i	AU

All Inventors Must Be Listed - Additional Inventor Information blocks may be generated within this form by selecting the **Add** button. Add

Correspondence Information:

Enter either Customer Number or complete the Correspondence Information section below. For further information see 37 CFR 1.33(a).

☐ **An Address is being provided for the correspondence Information of this application.**

Customer Number	130554		
Email Address	kmcdermott@mcdermlaw.com	Add Email	Remove Email

Application Information:

Title of the Invention	ROOF AND WALL COVER SYSTEM		
Attorney Docket Number	2021_01B	**Small Entity Status Claimed**	☒
Application Type	Nonprovisional		
Subject Matter			
Total Number of Drawing Sheets (if any)	15	**Suggested Figure for Publication (if any)**	

Filing By Reference:

Only complete this section when filing an application by reference under 35 U.S.C. 111(c) and 37 CFR 1.57(a). Do not complete this section if application papers including a specification and any drawings are being filed. Any domestic benefit or foreign priority information must be provided in the appropriate section(s) below (i.e., "Domestic Benefit/National Stage Information" and "Foreign Priority Information").

For the purposes of a filing date under 37 CFR 1.53(b), the description and any drawings of the present application are replaced by this reference to the previously filed application, subject to conditions and requirements of 37 CFR 1.57(a).

Application number of the previously filed application	Filing date (YYYY-MM-DD)	Intellectual Property Authority or Country i

Under the Paperwork Reduction Act of 1995, no persons are required to respond to a collection of information unless it contains a valid OMB control number.

Application Data Sheet 37 CFR 1.76	Attorney Docket Number	2021_01B
	Application Number	
Title of Invention	ROOF AND WALL COVER SYSTEM	

Publication Information:

☐ Request Early Publication (Fee required at time of Request 37 CFR 1.219)

☐ **Request Not to Publish.** I hereby request that the attached application not be published under 35 U.S.C. 122(b) and certify that the invention disclosed in the attached application **has not and will not** be the subject of an application filed in another country, or under a multilateral international agreement, that requires publication at eighteen months after filing.

Representative Information:

Representative information should be provided for all practitioners having a power of attorney in the application. Providing this information in the Application Data Sheet does not constitute a power of attorney in the application (see 37 CFR 1.32).
Either enter Customer Number or complete the Representative Name section below. If both sections are completed the customer Number will be used for the Representative Information during processing.

Please Select One:	● Customer Number	US Patent Practitioner	○ Limited Recognition (37 CFR 11.9)
Customer Number	130554		

Domestic Benefit/National Stage Information:

This section allows for the applicant to either claim benefit under 35 U.S.C. 119(e), 120, 121, 365(c), or 386(c) or indicate National Stage entry from a PCT application. Providing benefit claim information in the Application Data Sheet constitutes the specific reference required by 35 U.S.C. 119(e) or 120, and 37 CFR 1.78.
When referring to the current application, please leave the "Application Number" field blank.

Prior Application Status	Pending		Remove
Application Number	Continuity Type	Prior Application Number	Filing or 371(c) Date (YYYY-MM-DD)
	Continuation of	17519787	2021-11-05

Prior Application Status	Patented				Remove
Application Number	Continuity Type	Prior Application Number	Filing Date (YYYY-MM-DD)	Patent Number	Issue Date (YYYY-MM-DD)
17519787	Continuation in part of	15783813	2017-10-13	11168484	2021-11-09

Prior Application Status	Patented				Remove
Application Number	Continuity Type	Prior Application Number	Filing Date (YYYY-MM-DD)	Patent Number	Issue Date (YYYY-MM-DD)
15783813	Continuation of	12995966	2011-05-31	9822536	2017-11-21

Prior Application Status	Abandoned		Remove
Application Number	Continuity Type	Prior Application Number	Filing or 371(c) Date (YYYY-MM-DD)
12995966	a 371 of international	PCT/AU2009/000685	2009-06-09

Under the Paperwork Reduction Act of 1995, no persons are required to respond to a collection of information unless it contains a valid OMB control number.

Application Data Sheet 37 CFR 1.76	Attorney Docket Number	2021_01B
	Application Number	
Title of Invention	ROOF AND WALL COVER SYSTEM	

Additional Domestic Benefit/National Stage Data may be generated within this form by selecting the **Add** button. Add

Foreign Priority Information:

This section allows for the applicant to claim priority to a foreign application. Providing this information in the application data sheet constitutes the claim for priority as required by 35 U.S.C. 119(b) and 37 CFR 1.55. When priority is claimed to a foreign application that is eligible for retrieval under the priority document exchange program (PDX)[i] the information will be used by the Office to automatically attempt retrieval pursuant to 37 CFR 1.55(i)(1) and (2). Under the PDX program, applicant bears the ultimate responsibility for ensuring that a copy of the foreign application is received by the Office from the participating foreign intellectual property office, or a certified copy of the foreign priority application is filed, within the time period specified in 37 CFR 1.55(g)(1).

Remove

Application Number	Country[i]	Filing Date (YYYY-MM-DD)	Access Code[i] (if applicable)
2009200232	AU	2009-01-22	

Remove

Application Number	Country[i]	Filing Date (YYYY-MM-DD)	Access Code[i] (if applicable)
2008101060	AU	2008-10-30	

Remove

Application Number	Country[i]	Filing Date (YYYY-MM-DD)	Access Code[i] (if applicable)
2008203409	AU	2008-07-30	

Remove

Application Number	Country[i]	Filing Date (YYYY-MM-DD)	Access Code[i] (if applicable)
2008202416	AU	2008-06-02	

Additional Foreign Priority Data may be generated within this form by selecting the **Add** button. Add

Statement under 37 CFR 1.55 or 1.78 for AIA (First Inventor to File) Transition Applications

☐ This application (1) claims priority to or the benefit of an application filed before March 16, 2013 and (2) also contains, or contained at any time, a claim to a claimed invention that has an effective filing date on or after March 16, 2013.
NOTE: By providing this statement under 37 CFR 1.55 or 1.78, this application, with a filing date on or after March 16, 2013, will be examined under the first inventor to file provisions of the AIA.

Under the Paperwork Reduction Act of 1995, no persons are required to respond to a collection of information unless it contains a valid OMB control number.

Application Data Sheet 37 CFR 1.76	Attorney Docket Number	2021_01B
	Application Number	
Title of Invention	ROOF AND WALL COVER SYSTEM	

Authorization or Opt-Out of Authorization to Permit Access:

When this Application Data Sheet is properly signed and filed with the application, applicant has provided written authority to permit a participating foreign intellectual property (IP) office access to the instant application-as-filed (see paragraph A in subsection 1 below) and the European Patent Office (EPO) access to any search results from the instant application (see paragraph B in subsection 1 below).

Should applicant choose not to provide an authorization identified in subsection 1 below, applicant **must opt-out** of the authorization by checking the corresponding box A or B or both in subsection 2 below.

NOTE: This section of the Application Data Sheet is **ONLY** reviewed and processed with the **INITIAL** filing of an application. After the initial filing of an application, an Application Data Sheet cannot be used to provide or rescind authorization for access by a foreign IP office(s). Instead, Form PTO/SB/39 or PTO/SB/69 must be used as appropriate.

1. Authorization to Permit Access by a Foreign Intellectual Property Office(s)

A. Priority Document Exchange (PDX) - Unless box A in subsection 2 (opt-out of authorization) is checked, the undersigned hereby **grants the USPTO authority** to provide the European Patent Office (EPO), the Japan Patent Office (JPO), the Korean Intellectual Property Office (KIPO), the State Intellectual Property Office of the People's Republic of China (SIPO), the World Intellectual Property Organization (WIPO), and any other foreign intellectual property office participating with the USPTO in a bilateral or multilateral priority document exchange agreement in which a foreign application claiming priority to the instant patent application is filed, access to: (1) the instant patent application-as-filed and its related bibliographic data, (2) any foreign or domestic application to which priority or benefit is claimed by the instant application and its related bibliographic data, and (3) the date of filing of this Authorization. See 37 CFR 1.14(h)(1).

B. Search Results from U.S. Application to EPO - Unless box B in subsection 2 (opt-out of authorization) is checked, the undersigned hereby **grants the USPTO authority** to provide the EPO access to the bibliographic data and search results from the instant patent application when a European patent application claiming priority to the instant patent application is filed. See 37 CFR 1.14(h)(2).

The applicant is reminded that the EPO's Rule 141(1) EPC (European Patent Convention) requires applicants to submit a copy of search results from the instant application without delay in a European patent application that claims priority to the instant application.

2. Opt-Out of Authorizations to Permit Access by a Foreign Intellectual Property Office(s)

☐ A. Applicant **DOES NOT** authorize the USPTO to permit a participating foreign IP office access to the instant application-as-filed. If this box is checked, the USPTO will not be providing a participating foreign IP office with any documents and information identified in subsection 1A above.

☐ B. Applicant **DOES NOT** authorize the USPTO to transmit to the EPO any search results from the instant patent application. If this box is checked, the USPTO will not be providing the EPO with search results from the instant application.

NOTE: Once the application has published or is otherwise publicly available, the USPTO may provide access to the application in accordance with 37 CFR 1.14.

Under the Paperwork Reduction Act of 1995, no persons are required to respond to a collection of information unless it contains a valid OMB control number.

Application Data Sheet 37 CFR 1.76	Attorney Docket Number	2021_01B
	Application Number	
Title of Invention	ROOF AND WALL COVER SYSTEM	

Applicant Information:

Providing assignment information in this section does not substitute for compliance with any requirement of part 3 of Title 37 of CFR to have an assignment recorded by the Office.

Applicant 1 Remove

If the applicant is the inventor (or the remaining joint inventor or inventors under 37 CFR 1.45), this section should not be completed. The information to be provided in this section is the name and address of the legal representative who is the applicant under 37 CFR 1.43; or the name and address of the assignee, person to whom the inventor is under an obligation to assign the invention, or person who otherwise shows sufficient proprietary interest in the matter who is the applicant under 37 CFR 1.46. If the applicant is an applicant under 37 CFR 1.46 (assignee, person to whom the inventor is obligated to assign, or person who otherwise shows sufficient proprietary interest) together with one or more joint inventors, then the joint inventor or inventors who are also the applicant should be identified in this section.

Clear

● Assignee	Legal Representative under 35 U.S.C. 117	Joint Inventor
Person to whom the inventor is obligated to assign.	Person who shows sufficient proprietary interest	

If applicant is the legal representative, indicate the authority to file the patent application, the inventor is:

Name of the Deceased or Legally Incapacitated Inventor:

If the Applicant is an Organization check here. ☒

Organization Name	System Stormseal Pty Ltd		
Mailing Address Information For Applicant:			
Address 1	380 West Botany Street		
Address 2	Unit 3		
City	Rockdale	**State/Province**	
Country	AU	Postal Code	2216
Phone Number		Fax Number	
Email Address			

Additional Applicant Data may be generated within this form by selecting the Add button. Add

Assignee Information including Non-Applicant Assignee Information:

Providing assignment information in this section does not substitute for compliance with any requirement of part 3 of Title 37 of CFR to have an assignment recorded by the Office.

Under the Paperwork Reduction Act of 1995, no persons are required to respond to a collection of information unless it contains a valid OMB control number.

Application Data Sheet 37 CFR 1.76	Attorney Docket Number	2021_01B
	Application Number	
Title of Invention	ROOF AND WALL COVER SYSTEM	

Assignee 1

Complete this section if assignee information, including non-applicant assignee information, is desired to be included on the patent application publication. An assignee-applicant identified in the "Applicant Information" section will appear on the patent application publication as an applicant. For an assignee-applicant, complete this section only if identification as an assignee is also desired on the patent application publication.

Remove

If the Assignee or Non-Applicant Assignee is an Organization check here. ☐

Prefix	**Given Name**	Middle Name	**Family Name**	Suffix

Mailing Address Information For Assignee including Non-Applicant Assignee:

Address 1			
Address 2			
City		**State/Province**	
Country i		Postal Code	
Phone Number		Fax Number	
Email Address			

Additional Assignee or Non-Applicant Assignee Data may be generated within this form by selecting the Add button. Add

Signature:

Remove

NOTE: This Application Data Sheet must be signed in accordance with 37 CFR 1.33(b). **However, if this Application Data Sheet is submitted with the INITIAL filing of the application and either box A or B is not checked in subsection 2 of the "Authorization or Opt-Out of Authorization to Permit Access" section, then this form must also be signed in accordance with 37 CFR 1.14(c).**

This Application Data Sheet **must** be signed by a patent practitioner if one or more of the applicants is a **juristic entity** (e.g., corporation or association). If the applicant is two or more joint inventors, this form must be signed by a patent practitioner, **all** joint inventors who are the applicant, or one or more joint inventor-applicants who have been given power of attorney (e.g., see USPTO Form PTO/AIA/81) on behalf of **all** joint inventor-applicants.

See 37 CFR 1.4(d) for the manner of making signatures and certifications.

Signature	/Kevin McDermott/			Date (YYYY-MM-DD)	2022-10-31
First Name	Kevin	Last Name	McDermott	Registration Number	48113

Additional Signature may be generated within this form by selecting the Add button. Add

Application Data Sheet 37 CFR 1.76	Attorney Docket Number	2021_01B
	Application Number	
Title of Invention	ROOF AND WALL COVER SYSTEM	

This collection of information is required by 37 CFR 1.76. The information is required to obtain or retain a benefit by the public which is to file (and by the USPTO to process) an application. Confidentiality is governed by 35 U.S.C. 122 and 37 CFR 1.14. This collection is estimated to take 23 minutes to complete, including gathering, preparing, and submitting the completed application data sheet form to the USPTO. Time will vary depending upon the individual case. Any comments on the amount of time you require to complete this form and/or suggestions for reducing this burden, should be sent to the Chief Information Officer, U.S. Patent and Trademark Office, U.S. Department of Commerce, P.O. Box 1450, Alexandria, VA 22313-1450. DO NOT SEND FEES OR COMPLETED FORMS TO THIS ADDRESS. **SEND TO: Commissioner for Patents, P.O. Box 1450, Alexandria, VA 22313-1450.**

Privacy Act Statement

The Privacy Act of 1974 (P.L. 93-579) requires that you be given certain information in connection with your submission of the attached form related to a patent application or patent. Accordingly, pursuant to the requirements of the Act, please be advised that: (1) the general authority for the collection of this information is 35 U.S.C. 2(b)(2); (2) furnishing of the information solicited is voluntary; and (3) the principal purpose for which the information is used by the U.S. Patent and Trademark Office is to process and/or examine your submission related to a patent application or patent. If you do not furnish the requested information, the U.S. Patent and Trademark Office may not be able to process and/or examine your submission, which may result in termination of proceedings or abandonment of the application or expiration of the patent.

The information provided by you in this form will be subject to the following routine uses:

1 The information on this form will be treated confidentially to the extent allowed under the Freedom of Information Act (5 U.S.C. 552) and the Privacy Act (5 U.S.C. 552a). Records from this system of records may be disclosed to the Department of Justice to determine whether the Freedom of Information Act requires disclosure of these records.

2. A record from this system of records may be disclosed, as a routine use, in the course of presenting evidence to a court, magistrate, or administrative tribunal, including disclosures to opposing counsel in the course of settlement negotiations.

3 A record in this system of records may be disclosed, as a routine use, to a Member of Congress submitting a request involving an individual, to whom the record pertains, when the individual has requested assistance from the Member with respect to the subject matter of the record.

4. A record in this system of records may be disclosed, as a routine use, to a contractor of the Agency having need for the information in order to perform a contract. Recipients of information shall be required to comply with the requirements of the Privacy Act of 1974, as amended, pursuant to 5 U.S.C. 552a(m).

5. A record related to an International Application filed under the Patent Cooperation Treaty in this system of records may be disclosed, as a routine use, to the International Bureau of the World Intellectual Property Organization, pursuant to the Patent CooperationTreaty.

6. A record in this system of records may be disclosed, as a routine use, to another federal agency for purposes of National Security review (35 U.S.C. 181) and for review pursuant to the Atomic Energy Act (42 U.S.C. 218(c)).

7. A record from this system of records may be disclosed, as a routine use, to the Administrator, General Services, or his/her designee, during an inspection of records conducted by GSA as part of that agency's responsibility to recommend improvements in records management practices and programs, under authority of 44 U.S.C. 2904 and 2906. Such disclosure shall be made in accordance with the GSA regulations governing inspection of records for this purpose, and any other relevant (i.e., GSA or Commerce) directive. Such disclosure shall not be used to make determinations about individuals.

8. A record from this system of records may be disclosed, as a routine use, to the public after either publication of the application pursuant to 35 U.S.C. 122(b) or issuance of a patent pursuant to 35 U.S.C. 151. Further, a record may be disclosed, subject to the limitations of 37 CFR 1.14, as a routine use, to the public if the record was filed in an application which became abandoned or in which the proceedings were terminated and which application is referenced by either a published application, an application open to public inspections or an issued patent.

9. A record from this system of records may be disclosed, as a routine use, to a Federal, State, or local law enforcement agency, if the USPTO becomes aware of a violation or potential violation of law or regulation.

PTO/SB/08a (01-09)
Approved for use through 02/28/2009. OMB 0651-0031
U.S. Patent and Trademark Office; U.S. DEPARTMENT OF COMMERCE
Under the Paperwork Reduction Act of 1995, no persons are required to respond to a collection of information unless it contains a valid OMB control number.

Substitute for form 1449/PTO

INFORMATION DISCLOSURE STATEMENT BY APPLICANT

(Use as many sheets as necessary)

Sheet 1 of 2

Complete if Known	
Application Number	TBD
Filing Date	October 31, 2022
First Named Inventor	Matthew LENNOX
Art Unit	TBD
Examiner Name	TBD
Attorney Docket Number	2021_01B

U. S. PATENT DOCUMENTS

Examiner Initials*	Cite No.[1]	Document Number Number-Kind Code[2] (if known)	Publication Date MM-DD-YYYY	Name of Patentee or Applicant of Cited Document	Pages, Columns, Lines, Where Relevant Passages or Relevant Figures Appear
		US- 6,425,213	07-30-2002	Lachapelle	
		US- 2008/0060302	03-13-2008	Bletsos et al.	
		US- 2005/0217202	10-06-2005	Crook	
		US- 2002/0095898	07-25-2002	Bettencourt	
		US- 6,206,991	03-27-2001	Starr	
		US- 4,061,519	12-06-1977	Hammer	
		US- 9,822,536	11-21-2017	Lennox et al.	
		US- 7,517,941	04-14-2009	Myhre et al.	
		US- 4,769,962	09-13-1988	Pohl et al.	
		US- 4,818,588	04-04-1989	Okabe et al.	
		US- 6,632,496	10-14-2003	Johnson et al.	
		US- 6,797,218	09-28-2004	Bickerstaff	
		US- 2008/0022620	01-31-2008	Crowley	
		US- 11,168,484	11-09-2021	Lennox et al.	
		US- 2007/0266643	11-22-2007	Cowvins	
		US-			
		US-			
		US-			
		US-			

FOREIGN PATENT DOCUMENTS

Examiner Initials*	Cite No.[1]	Foreign Patent Document Country Code[3]-Number[4]-Kind Code[5] (if known)	Publication Date MM-DD-YYYY	Name of Patentee or Applicant of Cited Document	Pages, Columns, Lines, Where Relevant Passages Or Relevant Figures Appear	T[6]
		AU 199466002	10-06-1994	Smith		
		AU 2008202416	09-18-2008	Farrow		
		GB 2388815	11-26-2003	Avril		
		GB 2376206	12-11-2002	Waight		
		EP 0410275	01-30-1991	Gottlieb		
		EP 0410275	01-30-1991	Gottlieb	English Abstract	

Examiner Signature		Date Considered	

*EXAMINER: Initial if reference considered, whether or not citation is in conformance with MPEP 609. Draw line through citation if not in conformance and not considered. Include copy of this form with next communication to applicant. [1]Applicant's unique citation designation number (optional). [2]See Kinds Codes of USPTO Patent Documents at www.uspto.gov or MPEP 901.04. [3] Enter Office that issued the document, by the two-letter code (WIPO Standard ST.3). [4] For Japanese patent documents, the indication of the year of the reign of the Emperor must precede the serial number of the patent document. [5]Kind of document by the appropriate symbols as indicated on the document under WIPO Standard ST.16 if possible. [6]Applicant is to place a check mark here if English language Translation is attached.

This collection of information is required by 37 CFR 1.97 and 1.98. The information is required to obtain or retain a benefit by the public which is to file (and by the USPTO to process) an application. Confidentiality is governed by 35 U.S.C. 122 and 37 CFR 1.14. This collection is estimated to take 2 hours to complete, including gathering, preparing, and submitting the completed application form to the USPTO. Time will vary depending upon the individual case. Any comments on the amount of time you require to complete this form and/or suggestions for reducing this burden, should be sent to the Chief Information Officer, U.S. Patent and Trademark Office, P.O. Box 1450, Alexandria, VA 22313-1450. DO NOT SEND FEES OR COMPLETED FORMS TO THIS ADDRESS. **SEND TO: Commissioner for Patents, P.O. Box 1450, Alexandria, VA 22313-1450.**

If you need assistance in completing the form, call 1-800-PTO-9199 (1-800-786-9199) and select option 2.

Under the Paperwork Reduction Act of 1995, no persons are required to respond to a collection of information unless it contains a valid OMB control number.

Substitute for form 1449/PTO

INFORMATION DISCLOSURE STATEMENT BY APPLICANT

(Use as many sheets as necessary)

Sheet 2 of 2

	Complete if Known
Application Number	TBD
Filing Date	October 31, 2022
First Named Inventor	Matthew LENNOX
Art Unit	TBD
Examiner Name	TBD
Attorney Docket Number	2021_01B

NON PATENT LITERATURE DOCUMENTS

Examiner Initials*	Cite No.[1]	Include name of the author (in CAPITAL LETTERS), title of the article (when appropriate), title of the item (book, magazine, journal, serial, symposium, catalog, etc.), date, page(s), volume-issue number(s), publisher, city and/or country where published.	T[2]
		Written Opinion of the International Searching Authority, completed October 8, 2010 by the Australian Patent Office for International Application PCT/AU2010/001026.	
		International Search Report of the Internation Searching Authority, completed October 8, 2010 by the Australian Patent Office, for International Application PCT/AU2010/001026.	
		International Search Report of the International Searching Authority, completed July 20, 2009 by the Australian Patent Office, for International Application PCT/AU2009/000685.	

Examiner Signature		Date Considered	

*EXAMINER: Initial if reference considered, whether or not citation is in conformance with MPEP 609. Draw line through citation if not in conformance and not considered. Include copy of this form with next communication to applicant.

1 Applicant's unique citation designation number (optional). 2 Applicant is to place a check mark here if English language Translation is attached.

This collection of information is required by 37 CFR 1.98. The information is required to obtain or retain a benefit by the public which is to file (and by the USPTO to process) an application. Confidentiality is governed by 35 U.S.C. 122 and 37 CFR 1.14. This collection is estimated to take 2 hours to complete, including gathering, preparing, and submitting the completed application form to the USPTO. Time will vary depending upon the individual case. Any comments on the amount of time you require to complete this form and/or suggestions for reducing this burden, should be sent to the Chief Information Officer, U.S. Patent and Trademark Office, P.O. Box 1450, Alexandria, VA 22313-1450. DO NOT SEND FEES OR COMPLETED FORMS TO THIS ADDRESS. **SEND TO: Commissioner for Patents, P.O. Box 1450, Alexandria, VA 22313-1450.**

If you need assistance in completing the form, call 1-800-PTO-9199 (1-800-786-9199) and select option 2.

IN THE UNITED STATES PATENT AND TRADEMARK OFFICE

In re application of	:	**Confirmation No. TBD**
Matthew LENNOX et al.	:	Applicant Reference No. 2021_01B
Serial No. TBD	:	Group Art Unit No. TBD
Filed October 31, 2022	:	Examiner TBD

ROOF AND WALL COVER SYSTEM

INFORMATION DISCLOSURE STATEMENT

Commissioner for Patents
P.O. Box 1450
Alexandria, VA 22313-1450

Sir:

Pursuant to the provisions of 37 CFR 1.56, 1.97 and 1.98, Applicant requests consideration of the information listed on attached Form PTO/SB/08.

1a. [X] This Information Disclosure Statement is submitted:

within three months of the filing date (or of entry into the National Stage) of the above-entitled application, **or**

before the mailing of a first Office Action on the merits or the mailing of a first Office Action after the filing of an RCE,

and thus no certification and/or fee is required.

1b. [] This Information Disclosure Statement is submitted

after the events of above paragraph 1a and prior to the mailing date of a final Office Action or a Notice of Allowance or an action which otherwise closes prosecution in the application, and thus:

(1) [] the certification of paragraph 2 below is provided, **or**
(2) [] the fee of $240.00 specified in 37 CFR 1.17(p) is enclosed.

1c. [] This Information Disclosure Statement is submitted:

after the mailing date of a final Office Action or Notice of Allowance or action which otherwise closes prosecution in the application, and prior to payment of the issue fee, and thus:

the certification of paragraph 2 below is provided, <u>and</u>

the fee of $240.00 specified in 37 CFR 1.17(p) is enclosed.

2. It is hereby certified

a. [] that each item of information contained in this Information Disclosure Statement was first cited in any communication from a foreign patent office in a counterpart foreign application not more than three months prior to the filing of the Statement (37 C.F.R. § 1.97(e)(1)), or

b. [] that no item of information contained in the Information Disclosure Statement was cited in a communication from a foreign patent office in a counterpart foreign application and, to the knowledge of the person signing the certification after making reasonable inquiry, was known to any individual designated in §1.56(c) more than three months prior to the filing of the Statement (37 C.F.R. 1.97(e)(2)).

4. For each non-English language reference listed on the attached Form PTO/SB/08, reference is made to one or more of the following:

a. [] a full or partial English language translation submitted herewith,
b. [] a foreign patent office search report or office action (in the English language) submitted herewith,
c. [] the concise explanation contained in the specification of the present application at page,
d. [X] the concise explanation set forth in the attached English language abstract,
e. [] the concise explanation set forth on the Form PTO/SB/08
f. [] an International Search Report submitted herewith.

5. [X] Written Opinions, International Search Reports, Office Actions and/or Search Reports from the European, Canadian and/or Australian Patent Offices citing one or more of the references are enclosed.

Respectfully submitted,

By: /Kevin McDermott/
Kevin McDermott
Registration No. 48,113
Attorney for Applicant

Telephone (703) 380-1795
October 31, 2022

CERTIFICATION AND REQUEST FOR PRIORITIZED EXAMINATION UNDER 37 CFR 1.102(e) (Page 1 of 1)

First Named Inventor:	Matthew LENNOX	Nonprovisional Application Number (if known):	
Title of Invention:	ROOF AND WALL COVER SYSTEM		

APPLICANT HEREBY CERTIFIES THE FOLLOWING AND REQUESTS PRIORITIZED EXAMINATION FOR THE ABOVE-IDENTIFIED APPLICATION.

1. The processing fee set forth in 37 CFR 1.17(i)(1) and the prioritized examination fee set forth in 37 CFR 1.17(c) have been filed with the request. The publication fee requirement is met because that fee, set forth in 37 CFR 1.18(d), is currently $0. The basic filing fee, search fee, and examination fee are filed with the request or have been already been paid. I understand that any required excess claims fees or application size fee must be paid for the application.

2. I understand that the application may not contain, or be amended to contain, more than four independent claims, more than thirty total claims, or any multiple dependent claims, and that any request for an extension of time will cause an outstanding Track I request to be dismissed.

3. The applicable box is checked below:

I. ☑ Original Application (Track One) - Prioritized Examination under § 1.102(e)(1)

i. (a) The application is an original nonprovisional utility application filed under 35 U.S.C. 111(a). This certification and request is being filed with the utility application via EFS-Web.

---OR---

(b) The application is an original nonprovisional plant application filed under 35 U.S.C. 111(a). This certification and request is being filed with the plant application in paper.

ii. An executed inventor's oath or declaration under 37 CFR 1.63 or 37 CFR 1.64 for each inventor, **or** the application data sheet meeting the conditions specified in 37 CFR 1.53(f)(3)(i) is filed with the application.

II. ☐ Request for Continued Examination - Prioritized Examination under § 1.102(e)(2)

i. A request for continued examination has been filed with, or prior to, this form.
ii. If the application is a utility application, this certification and request is being filed via EFS-Web.
iii. The application is an original nonprovisional utility application filed under 35 U.S.C. 111(a), or is a national stage entry under 35 U.S.C. 371.
iv. This certification and request is being filed prior to the mailing of a first Office action responsive to the request for continued examination.
v. No prior request for continued examination has been granted prioritized examination status under 37 CFR 1.102(e)(2).

Signature /Kevin McDermott/	Date October 31, 2022
Name (Print/Typed) Kevin McDermott	Practitioner Registration Number 48113

Note: *This form must be signed in accordance with 37 CFR 1.33. See 37 CFR 1.4(d) for signature requirements and certifications. Submit multiple forms if more than one signature is required.**

☐ *Total of _____ forms are submitted.

Privacy Act Statement

The **Privacy Act of 1974 (P.L. 93-579)** requires that you be given certain information in connection with your submission of the attached form related to a patent application or patent. Accordingly, pursuant to the requirements of the Act, please be advised that: (1) the general authority for the collection of this information is 35 U.S.C. 2(b)(2); (2) furnishing of the information solicited is voluntary; and (3) the principal purpose for which the information is used by the U.S. Patent and Trademark Office is to process and/or examine your submission related to a patent application or patent. If you do not furnish the requested information, the U.S. Patent and Trademark Office may not be able to process and/or examine your submission, which may result in termination of proceedings or abandonment of the application or expiration of the patent.

The information provided by you in this form will be subject to the following routine uses:

1. The information on this form will be treated confidentially to the extent allowed under the Freedom of Information Act (5 U.S.C. 552) and the Privacy Act (5 U.S.C 552a). Records from this system of records may be disclosed to the Department of Justice to determine whether disclosure of these records is required by the Freedom of Information Act.
2. A record from this system of records may be disclosed, as a routine use, in the course of presenting evidence to a court, magistrate, or administrative tribunal, including disclosures to opposing counsel in the course of settlement negotiations.
3. A record in this system of records may be disclosed, as a routine use, to a Member of Congress submitting a request involving an individual, to whom the record pertains, when the individual has requested assistance from the Member with respect to the subject matter of the record.
4. A record in this system of records may be disclosed, as a routine use, to a contractor of the Agency having need for the information in order to perform a contract. Recipients of information shall be required to comply with the requirements of the Privacy Act of 1974, as amended, pursuant to 5 U.S.C. 552a(m).
5. A record related to an International Application filed under the Patent Cooperation Treaty in this system of records may be disclosed, as a routine use, to the International Bureau of the World Intellectual Property Organization, pursuant to the Patent Cooperation Treaty.
6. A record in this system of records may be disclosed, as a routine use, to another federal agency for purposes of National Security review (35 U.S.C. 181) and for review pursuant to the Atomic Energy Act (42 U.S.C. 218(c)).
7. A record from this system of records may be disclosed, as a routine use, to the Administrator, General Services, or his/her designee, during an inspection of records conducted by GSA as part of that agency's responsibility to recommend improvements in records management practices and programs, under authority of 44 U.S.C. 2904 and 2906. Such disclosure shall be made in accordance with the GSA regulations governing inspection of records for this purpose, and any other relevant (*i.e.*, GSA or Commerce) directive. Such disclosure shall not be used to make determinations about individuals.
8. A record from this system of records may be disclosed, as a routine use, to the public after either publication of the application pursuant to 35 U.S.C. 122(b) or issuance of a patent pursuant to 35 U.S.C. 151. Further, a record may be disclosed, subject to the limitations of 37 CFR 1.14, as a routine use, to the public if the record was filed in an application which became abandoned or in which the proceedings were terminated and which application is referenced by either a published application, an application open to public inspection or an issued patent.
9. A record from this system of records may be disclosed, as a routine use, to a Federal, State, or local law enforcement agency, if the USPTO becomes aware of a violation or potential violation of law or regulation.

Doc code: Oath
Document Description: Oath or declaration filed

PTO/AIA/02 (07-13)
Approved for use through 11/30/2020. OMB 0651-0032
U.S. Patent and Trademark Office; U.S. DEPARTMENT OF COMMERCE
Under the Paperwork Reduction Act of 1995, no persons are required to respond to a collection of information unless it displays a valid OMB control number.

SUBSTITUTE STATEMENT IN LIEU OF AN OATH OR DECLARATION FOR UTILITY OR DESIGN PATENT APPLICATION (35 U.S.C. 115(d) AND 37 CFR 1.64)

Title of invention: ROOF AND WALL COVER SYSTEM

This statement is directed to:

☐ The attached application,

OR

☒ United States application or PCT international application number 17/977,136 filed on October 31, 2022.

LEGAL NAME of inventor to whom this substitute statement applies:

(*E.g.*, Given Name (first and middle (if any)) and Family Name or Surname)

Rodney BURGE

Residence (except for a deceased or legally incapacitated inventor):

City Miranda | State | Country AU

Mailing Address (except for a deceased or legally incapacitated inventor):

Unit 27, 205/213 Port Hacking Road

City Miranda | State NSW | Zip 2228 | Country AU

I believe the above-named inventor or joint inventor to be the original inventor or an original joint inventor of a claimed invention in the application.

The above-identified application was made or authorized to be made by me.

I hereby acknowledge that any willful false statement made in this statement is punishable under 18 U.S.C. 1001 by fine or imprisonment of not more than five (5) years, or both.

Relationship to the inventor to whom this substitute statement applies:

☐ Legal Representative (for deceased or legally incapacitated inventor only),

☒ Assignee,

☐ Person to whom the inventor is under an obligation to assign,

☐ Person who otherwise shows a sufficient proprietary interest in the matter (petition under 37 CFR 1.46 is required), or

☐ Joint Inventor.

This collection of information is required by 35 U.S.C. 115 and 37 CFR 1.63. The information is required to obtain or retain a benefit by the public which is to file (and by the USPTO to process) an application. Confidentiality is governed by 35 U.S.C. 122 and 37 CFR 1.11 and 1.14. This collection is estimated to take 1 minute to complete, including gathering, preparing, and submitting the completed application form to the USPTO. Time will vary depending upon the individual case. Any comments on the amount of time you require to complete this form and/or suggestions for reducing this burden, should be sent to the Chief Information Officer, U.S. Patent and Trademark Office, U.S. Department of Commerce, P.O. Box 1450, Alexandria, VA 22313-1450. DO NOT SEND FEES OR COMPLETED FORMS TO THIS ADDRESS. **SEND TO: Commissioner for Patents, P.O. Box 1450, Alexandria, VA 22313-1450.**

If you need assistance in completing the form, call 1-800-PTO-9199 and select option 2.

Under the Paperwork Reduction Act of 1995, no persons are required to respond to a collection of information unless it displays a valid OMB control number.

SUBSTITUTE STATEMENT

Circumstances permitting execution of this substitute statement:

- [ ] Inventor is deceased,
- [ ] Inventor is under legal incapacity,
- [x] Inventor cannot be found or reached after diligent effort, or
- [ ] Inventor has refused to execute the oath or declaration under 37 CFR 1.63.

If there are joint inventors, please check the appropriate box below:

- [x] An application data sheet under 37 CFR 1.76 (PTO/AIA/14 or equivalent) naming the entire inventive entity has been or is currently submitted.

OR

- [ ] An application data sheet under 37 CFR 1.76 (PTO/AIA/14 or equivalent) has not been submitted. Thus, a Substitute Statement Supplemental Sheet (PTO/AIA/11 or equivalent) naming the entire inventive entity and providing inventor information is attached. See 37 CFR 1.64(b).

WARNING:

Petitioner/applicant is cautioned to avoid submitting personal information in documents filed in a patent application that may contribute to identity theft. Personal information such as social security numbers, bank account numbers, or credit card numbers (other than a check or credit card authorization form PTO-2038 submitted for payment purposes) is never required by the USPTO to support a petition or an application. If this type of personal information is included in documents submitted to the USPTO, petitioners/applicants should consider redacting such personal information from the documents before submitting them to the USPTO. Petitioner/applicant is advised that the record of a patent application is available to the public after publication of the application (unless a non-publication request in compliance with 37 CFR 1.213(a) is made in the application) or issuance of a patent. Furthermore, the record from an abandoned application may also be available to the public if the application is referenced in a published application or an issued patent (see 37 CFR 1.14). Checks and credit card authorization forms PTO-2038 submitted for payment purposes are not retained in the application file and therefore are not publicly available.

PERSON EXECUTING THIS SUBSTITUTE STATEMENT:

Name: Matthew LENNOX | Date (Optional):

Signature:

APPLICANT NAME AND TITLE OF PERSON EXECUTING THIS SUBSTITUTE STATEMENT:

If the applicant is a juristic entity, list the applicant name and the title of the signer:

Applicant Name: System Stormseal Pty Ltd

Title of Person Executing This Substitute Statement: President

The signer, whose title is supplied above, is authorized to act on behalf of the applicant.

Residence of the signer (unless provided in an application data sheet, PTO/AIA/14 or equivalent):

City	State	Country

Mailing Address of the signer (unless provided in an application data sheet, PTO/AIA/14 or equivalent)

City	State	Zip	Country

Note: Use an additional PTO/AIA/02 form for each inventor who is deceased, legally incapacitated, cannot be found or reached after diligent effort, or has refused to execute the oath or declaration under 37 CFR 1.63.

Privacy Act Statement

The **Privacy Act of 1974 (P.L. 93-579)** requires that you be given certain information in connection with your submission of the attached form related to a patent application or patent. Accordingly, pursuant to the requirements of the Act, please be advised that: (1) the general authority for the collection of this information is 35 U.S.C. 2(b)(2); (2) furnishing of the information solicited is voluntary; and (3) the principal purpose for which the information is used by the U.S. Patent and Trademark Office is to process and/or examine your submission related to a patent application or patent. If you do not furnish the requested information, the U.S. Patent and Trademark Office may not be able to process and/or examine your submission, which may result in termination of proceedings or abandonment of the application or expiration of the patent.

The information provided by you in this form will be subject to the following routine uses:

1. The information on this form will be treated confidentially to the extent allowed under the Freedom of Information Act (5 U.S.C. 552) and the Privacy Act (5 U.S.C 552a). Records from this system of records may be disclosed to the Department of Justice to determine whether disclosure of these records is required by the Freedom of Information Act.
2. A record from this system of records may be disclosed, as a routine use, in the course of presenting evidence to a court, magistrate, or administrative tribunal, including disclosures to opposing counsel in the course of settlement negotiations.
3. A record in this system of records may be disclosed, as a routine use, to a Member of Congress submitting a request involving an individual, to whom the record pertains, when the individual has requested assistance from the Member with respect to the subject matter of the record.
4. A record in this system of records may be disclosed, as a routine use, to a contractor of the Agency having need for the information in order to perform a contract. Recipients of information shall be required to comply with the requirements of the Privacy Act of 1974, as amended, pursuant to 5 U.S.C. 552a(m).
5. A record related to an International Application filed under the Patent Cooperation Treaty in this system of records may be disclosed, as a routine use, to the International Bureau of the World Intellectual Property Organization, pursuant to the Patent Cooperation Treaty.
6. A record in this system of records may be disclosed, as a routine use, to another federal agency for purposes of National Security review (35 U.S.C. 181) and for review pursuant to the Atomic Energy Act (42 U.S.C. 218(c)).
7. A record from this system of records may be disclosed, as a routine use, to the Administrator, General Services, or his/her designee, during an inspection of records conducted by GSA as part of that agency's responsibility to recommend improvements in records management practices and programs, under authority of 44 U.S.C. 2904 and 2906. Such disclosure shall be made in accordance with the GSA regulations governing inspection of records for this purpose, and any other relevant (*i.e.*, GSA or Commerce) directive. Such disclosure shall not be used to make determinations about individuals.
8. A record from this system of records may be disclosed, as a routine use, to the public after either publication of the application pursuant to 35 U.S.C. 122(b) or issuance of a patent pursuant to 35 U.S.C. 151. Further, a record may be disclosed, subject to the limitations of 37 CFR 1.14, as a routine use, to the public if the record was filed in an application which became abandoned or in which the proceedings were terminated and which application is referenced by either a published application, an application open to public inspection or an issued patent.
9. A record from this system of records may be disclosed, as a routine use, to a Federal, State, or local law enforcement agency, if the USPTO becomes aware of a violation or potential violation of law or regulation.

Doc code: Oath
Document Description: Oath or declaration filed

PTO/AIA/02 (07-13)
Approved for use through 11/30/2020. OMB 0651-0032
U.S. Patent and Trademark Office; U.S. DEPARTMENT OF COMMERCE
Under the Paperwork Reduction Act of 1995, no persons are required to respond to a collection of information unless it displays a valid OMB control number.

SUBSTITUTE STATEMENT IN LIEU OF AN OATH OR DECLARATION FOR UTILITY OR DESIGN PATENT APPLICATION (35 U.S.C. 115(d) AND 37 CFR 1.64)

Title of Invention ROOF AND WALL COVER SYSTEM

This statement is directed to:

☐ The attached application,

OR

☒ United States application or PCT international application number 17/977,136 filed on October 31, 2022

LEGAL NAME of inventor to whom this substitute statement applies:

(*E.g.*, Given Name (first and middle (if any)) and Family Name or Surname)

Adam FARROW

Residence (except for a deceased or legally incapacitated inventor):

City Miranda | State | Country AU

Mailing Address (except for a deceased or legally incapacitated inventor):

Unit 27, 205/213 Port Hacking Road

City Miranda | State NSW | Zip 2228 | Country AU

I believe the above-named inventor or joint inventor to be the original inventor or an original joint inventor of a claimed invention in the application.

The above-identified application was made or authorized to be made by me.

I hereby acknowledge that any willful false statement made in this statement is punishable under 18 U.S.C. 1001 by fine or imprisonment of not more than five (5) years, or both.

Relationship to the inventor to whom this substitute statement applies:

☐ Legal Representative (for deceased or legally incapacitated inventor only),

☒ Assignee,

☐ Person to whom the inventor is under an obligation to assign,

☐ Person who otherwise shows a sufficient proprietary interest in the matter (petition under 37 CFR 1.46 is required), or

☐ Joint Inventor.

This collection of information is required by 35 U.S.C. 115 and 37 CFR 1.63. The information is required to obtain or retain a benefit by the public which is to file (and by the USPTO to process) an application. Confidentiality is governed by 35 U.S.C. 122 and 37 CFR 1.11 and 1.14. This collection is estimated to take 1 minute to complete, including gathering, preparing, and submitting the completed application form to the USPTO. Time will vary depending upon the individual case. Any comments on the amount of time you require to complete this form and/or suggestions for reducing this burden, should be sent to the Chief Information Officer, U.S. Patent and Trademark Office, U.S. Department of Commerce, P.O. Box 1450, Alexandria, VA 22313-1450. DO NOT SEND FEES OR COMPLETED FORMS TO THIS ADDRESS. **SEND TO: Commissioner for Patents, P.O. Box 1450, Alexandria, VA 22313-1450.**

If you need assistance in completing the form, call 1-800-PTO-9199 and select option 2.

Under the Paperwork Reduction Act of 1995, no persons are required to respond to a collection of information unless it displays a valid OMB control number.

SUBSTITUTE STATEMENT

Circumstances permitting execution of this substitute statement:

- ☐ Inventor is deceased,
- ☐ Inventor is under legal incapacity,
- ☒ Inventor cannot be found or reached after diligent effort, or
- ☐ Inventor has refused to execute the oath or declaration under 37 CFR 1.63.

If there are joint inventors, please check the appropriate box below:

- ☒ An application data sheet under 37 CFR 1.76 (PTO/AIA/14 or equivalent) naming the entire inventive entity has been or is currently submitted.

OR

- ☐ An application data sheet under 37 CFR 1.76 (PTO/AIA/14 or equivalent) has not been submitted. Thus, a Substitute Statement Supplemental Sheet (PTO/AIA/11 or equivalent) naming the entire inventive entity and providing inventor information is attached. See 37 CFR 1.64(b).

WARNING:

Petitioner/applicant is cautioned to avoid submitting personal information in documents filed in a patent application that may contribute to identity theft. Personal information such as social security numbers, bank account numbers, or credit card numbers (other than a check or credit card authorization form PTO-2038 submitted for payment purposes) is never required by the USPTO to support a petition or an application. If this type of personal information is included in documents submitted to the USPTO, petitioners/applicants should consider redacting such personal information from the documents before submitting them to the USPTO. Petitioner/applicant is advised that the record of a patent application is available to the public after publication of the application (unless a non-publication request in compliance with 37 CFR 1.213(a) is made in the application) or issuance of a patent. Furthermore, the record from an abandoned application may also be available to the public if the application is referenced in a published application or an issued patent (see 37 CFR 1.14). Checks and credit card authorization forms PTO-2038 submitted for payment purposes are not retained in the application file and therefore are not publicly available.

PERSON EXECUTING THIS SUBSTITUTE STATEMENT:

Name: Matthew LENNOX | Date (Optional):

Signature:

APPLICANT NAME AND TITLE OF PERSON EXECUTING THIS SUBSTITUTE STATEMENT:

If the applicant is a juristic entity, list the applicant name and the title of the signer:

Applicant Name: System Stormseal Pty Ltd

Title of Person Executing This Substitute Statement: President

The signer, whose title is supplied above, is authorized to act on behalf of the applicant.

Residence of the signer (unless provided in an application data sheet, PTO/AIA/14 or equivalent):

City | State | Country

Mailing Address of the signer (unless provided in an application data sheet, PTO/AIA/14 or equivalent)

City | State | Zip | Country

Note: Use an additional PTO/AIA/02 form for each inventor who is deceased, legally incapacitated, cannot be found or reached after diligent effort, or has refused to execute the oath or declaration under 37 CFR 1.63.

Privacy Act Statement

The **Privacy Act of 1974 (P.L. 93-579)** requires that you be given certain information in connection with your submission of the attached form related to a patent application or patent. Accordingly, pursuant to the requirements of the Act, please be advised that: (1) the general authority for the collection of this information is 35 U.S.C. 2(b)(2); (2) furnishing of the information solicited is voluntary; and (3) the principal purpose for which the information is used by the U.S. Patent and Trademark Office is to process and/or examine your submission related to a patent application or patent. If you do not furnish the requested information, the U.S. Patent and Trademark Office may not be able to process and/or examine your submission, which may result in termination of proceedings or abandonment of the application or expiration of the patent.

The information provided by you in this form will be subject to the following routine uses:

1. The information on this form will be treated confidentially to the extent allowed under the Freedom of Information Act (5 U.S.C. 552) and the Privacy Act (5 U.S.C 552a). Records from this system of records may be disclosed to the Department of Justice to determine whether disclosure of these records is required by the Freedom of Information Act.
2. A record from this system of records may be disclosed, as a routine use, in the course of presenting evidence to a court, magistrate, or administrative tribunal, including disclosures to opposing counsel in the course of settlement negotiations.
3. A record in this system of records may be disclosed, as a routine use, to a Member of Congress submitting a request involving an individual, to whom the record pertains, when the individual has requested assistance from the Member with respect to the subject matter of the record.
4. A record in this system of records may be disclosed, as a routine use, to a contractor of the Agency having need for the information in order to perform a contract. Recipients of information shall be required to comply with the requirements of the Privacy Act of 1974, as amended, pursuant to 5 U.S.C. 552a(m).
5. A record related to an International Application filed under the Patent Cooperation Treaty in this system of records may be disclosed, as a routine use, to the International Bureau of the World Intellectual Property Organization, pursuant to the Patent Cooperation Treaty.
6. A record in this system of records may be disclosed, as a routine use, to another federal agency for purposes of National Security review (35 U.S.C. 181) and for review pursuant to the Atomic Energy Act (42 U.S.C. 218(c)).
7. A record from this system of records may be disclosed, as a routine use, to the Administrator, General Services, or his/her designee, during an inspection of records conducted by GSA as part of that agency's responsibility to recommend improvements in records management practices and programs, under authority of 44 U.S.C. 2904 and 2906. Such disclosure shall be made in accordance with the GSA regulations governing inspection of records for this purpose, and any other relevant (*i.e.*, GSA or Commerce) directive. Such disclosure shall not be used to make determinations about individuals.
8. A record from this system of records may be disclosed, as a routine use, to the public after either publication of the application pursuant to 35 U.S.C. 122(b) or issuance of a patent pursuant to 35 U.S.C. 151. Further, a record may be disclosed, subject to the limitations of 37 CFR 1.14, as a routine use, to the public if the record was filed in an application which became abandoned or in which the proceedings were terminated and which application is referenced by either a published application, an application open to public inspection or an issued patent.
9. A record from this system of records may be disclosed, as a routine use, to a Federal, State, or local law enforcement agency, if the USPTO becomes aware of a violation or potential violation of law or regulation.

PTO/AIA/01 (08-12)
Approved for use through 11/30/2020. OMB 0651-0032
U.S. Patent and Trademark Office; U.S. DEPARTMENT OF COMMERCE
Under the Paperwork Reduction Act of 1995, no persons are required to respond to a collection of information unless it displays a valid OMB control number.

DECLARATION (37 CFR 1.63) FOR UTILITY OR DESIGN APPLICATION USING AN APPLICATION DATA SHEET (37 CFR 1.76)

Title of Invention	ROOF AND WALL COVER SYSTEM

As the below named inventor, I hereby declare that:

This declaration is directed to:

☒ The attached application, or

☒ United States application or PCT international application number 17/977,136

filed on October 31, 2022.

The above-identified application was made or authorized to be made by me.

I believe that I am the original inventor or an original joint inventor of a claimed invention in the application.

I hereby acknowledge that any willful false statement made in this declaration is punishable under 18 U.S.C. 1001 by fine or imprisonment of not more than five (5) years, or both.

WARNING:

Petitioner/applicant is cautioned to avoid submitting personal information in documents filed in a patent application that may contribute to identity theft. Personal information such as social security numbers, bank account numbers, or credit card numbers (other than a check or credit card authorization form PTO-2038 submitted for payment purposes) is never required by the USPTO to support a petition or an application. If this type of personal information is included in documents submitted to the USPTO, petitioners/applicants should consider redacting such personal information from the documents before submitting them to the USPTO. Petitioner/applicant is advised that the record of a patent application is available to the public after publication of the application (unless a non-publication request in compliance with 37 CFR 1.213(a) is made in the application) or issuance of a patent. Furthermore, the record from an abandoned application may also be available to the public if the application is referenced in a published application or an issued patent (see 37 CFR 1.14). Checks and credit card authorization forms PTO-2038 submitted for payment purposes are not retained in the application file and therefore are not publicly available.

LEGAL NAME OF INVENTOR

Inventor: Matthew LENNOX Date (Optional) :

Signature:

Note: An application data sheet (PTO/SB/14 or equivalent), including naming the entire inventive entity, must accompany this form or must have been previously filed. Use an additional PTO/AIA/01 form for each additional inventor.

This collection of information is required by 35 U.S.C. 115 and 37 CFR 1.63. The information is required to obtain or retain a benefit by the public which is to file (and by the USPTO to process) an application. Confidentiality is governed by 35 U.S.C. 122 and 37 CFR 1.11 and 1.14. This collection is estimated to take 1 minute to complete, including gathering, preparing, and submitting the completed application form to the USPTO. Time will vary depending upon the individual case. Any comments on the amount of time you require to complete this form and/or suggestions for reducing this burden, should be sent to the Chief Information Officer, U.S. Patent and Trademark Office, U.S. Department of Commerce, P.O. Box 1450, Alexandria, VA 22313-1450. DO NOT SEND FEES OR COMPLETED FORMS TO THIS ADDRESS. **SEND TO: Commissioner for Patents, P.O. Box 1450, Alexandria, VA 22313-1450.**

If you need assistance in completing the form, call 1-800-PTO-9199 and select option 2.

Privacy Act Statement

The **Privacy Act of 1974 (P.L. 93-579)** requires that you be given certain information in connection with your submission of the attached form related to a patent application or patent. Accordingly, pursuant to the requirements of the Act, please be advised that: (1) the general authority for the collection of this information is 35 U.S.C. 2(b)(2); (2) furnishing of the information solicited is voluntary; and (3) the principal purpose for which the information is used by the U.S. Patent and Trademark Office is to process and/or examine your submission related to a patent application or patent. If you do not furnish the requested information, the U.S. Patent and Trademark Office may not be able to process and/or examine your submission, which may result in termination of proceedings or abandonment of the application or expiration of the patent.

The information provided by you in this form will be subject to the following routine uses:

1. The information on this form will be treated confidentially to the extent allowed under the Freedom of Information Act (5 U.S.C. 552) and the Privacy Act (5 U.S.C 552a). Records from this system of records may be disclosed to the Department of Justice to determine whether disclosure of these records is required by the Freedom of Information Act.
2. A record from this system of records may be disclosed, as a routine use, in the course of presenting evidence to a court, magistrate, or administrative tribunal, including disclosures to opposing counsel in the course of settlement negotiations.
3. A record in this system of records may be disclosed, as a routine use, to a Member of Congress submitting a request involving an individual, to whom the record pertains, when the individual has requested assistance from the Member with respect to the subject matter of the record.
4. A record in this system of records may be disclosed, as a routine use, to a contractor of the Agency having need for the information in order to perform a contract. Recipients of information shall be required to comply with the requirements of the Privacy Act of 1974, as amended, pursuant to 5 U.S.C. 552a(m).
5. A record related to an International Application filed under the Patent Cooperation Treaty in this system of records may be disclosed, as a routine use, to the International Bureau of the World Intellectual Property Organization, pursuant to the Patent Cooperation Treaty.
6. A record in this system of records may be disclosed, as a routine use, to another federal agency for purposes of National Security review (35 U.S.C. 181) and for review pursuant to the Atomic Energy Act (42 U.S.C. 218(c)).
7. A record from this system of records may be disclosed, as a routine use, to the Administrator, General Services, or his/her designee, during an inspection of records conducted by GSA as part of that agency's responsibility to recommend improvements in records management practices and programs, under authority of 44 U.S.C. 2904 and 2906. Such disclosure shall be made in accordance with the GSA regulations governing inspection of records for this purpose, and any other relevant (*i.e.*, GSA or Commerce) directive. Such disclosure shall not be used to make determinations about individuals.
8. A record from this system of records may be disclosed, as a routine use, to the public after either publication of the application pursuant to 35 U.S.C. 122(b) or issuance of a patent pursuant to 35 U.S.C. 151. Further, a record may be disclosed, subject to the limitations of 37 CFR 1.14, as a routine use, to the public if the record was filed in an application which became abandoned or in which the proceedings were terminated and which application is referenced by either a published application, an application open to public inspection or an issued patent.
9. A record from this system of records may be disclosed, as a routine use, to a Federal, State, or local law enforcement agency, if the USPTO becomes aware of a violation or potential violation of law or regulation.

Electronic Acknowledgement Receipt

EFS ID:	47048791
Application Number:	17977136
International Application Number:	
Confirmation Number:	7315
Title of Invention:	ROOF AND WALL COVER SYSTEM
First Named Inventor/Applicant Name:	Matthew LENNOX
Customer Number:	130554
Filer:	Kevin McDermott
Filer Authorized By:	
Attorney Docket Number:	2021_01B
Receipt Date:	17-NOV-2022
Filing Date:	
Time Stamp:	18:23:42
Application Type:	Utility under 35 USC 111(a)

Payment information:

Submitted with Payment	no

File Listing:

Document Number	Document Description	File Name	File Size(Bytes)/ Message Digest	Multi Part /.zip	Pages (if appl.)
1	Oath or Declaration filed	Declaration-executed-BURGE.pdf	223000 4c7c13c75abfbb8d36e585193d0ae4c819674e5c	no	3

Warnings:

Information:					
2	Oath or Declaration filed	Declaration-executed-FARROW.pdf	223304 00f7ac8e6884ecd9c8ec45eb27c888743659d85c	no	3
Warnings:					
Information:					
3	Oath or Declaration filed	Matt-Declaration-executed.pdf	145763 07df4ffd770e79bf90097cb0d3b2dd2ec82b3275	no	2
Warnings:					
Information:					
			Total Files Size (in bytes):	592067	

This Acknowledgement Receipt evidences receipt on the noted date by the USPTO of the indicated documents, characterized by the applicant, and including page counts, where applicable. It serves as evidence of receipt similar to a Post Card, as described in MPEP 503.

<u>New Applications Under 35 U.S.C. 111</u>
If a new application is being filed and the application includes the necessary components for a filing date (see 37 CFR 1.53(b)-(d) and MPEP 506), a Filing Receipt (37 CFR 1.54) will be issued in due course and the date shown on this Acknowledgement Receipt will establish the filing date of the application.
<u>National Stage of an International Application under 35 U.S.C. 371</u>
If a timely submission to enter the national stage of an international application is compliant with the conditions of 35 U.S.C. 371 and other applicable requirements a Form PCT/DO/EO/903 indicating acceptance of the application as a national stage submission under 35 U.S.C. 371 will be issued in addition to the Filing Receipt, in due course.
<u>New International Application Filed with the USPTO as a Receiving Office</u>
If a new international application is being filed and the international application includes the necessary components for an international filing date (see PCT Article 11 and MPEP 1810), a Notification of the International Application Number and of the International Filing Date (Form PCT/RO/105) will be issued in due course, subject to prescriptions concerning national security, and the date shown on this Acknowledgement Receipt will establish the international filing date of the application.

PTO/SB/08a (01-09)
Approved for use through 02/28/2009. OMB 0651-0031
U.S. Patent and Trademark Office; U.S. DEPARTMENT OF COMMERCE
Under the Paperwork Reduction Act of 1995, no persons are required to respond to a collection of information unless it contains a valid OMB control number.

Substitute for form 1449/PTO

INFORMATION DISCLOSURE STATEMENT BY APPLICANT

(Use as many sheets as necessary)

Sheet 1 of 2

Complete if Known	
Application Number	17/977,136
Filing Date	October 31, 2022
First Named Inventor	Matthew LENNOX
Art Unit	TBD
Examiner Name	TBD
Attorney Docket Number	2021_01B

U. S. PATENT DOCUMENTS

Examiner Initials*	Cite No.[1]	Document Number Number-Kind Code[2] *(if known)*	Publication Date MM-DD-YYYY	Name of Patentee or Applicant of Cited Document	Pages, Columns, Lines, Where Relevant Passages or Relevant Figures Appear
		US- 4,763,783	08-16-1988	Talbot	
		US- 7,951,873	05-31-2011	Best et al.	
		US- 8,247,065	08-21-2012	Best et al.	
		US-			
		US-			
		US-			
		US-			
		US-			
		US-			
		US-			
		US-			
		US-			
		US-			
		US-			
		US-			
		US-			
		US-			
		US-			
		US-			

FOREIGN PATENT DOCUMENTS

Examiner Initials*	Cite No.[1]	Foreign Patent Document Country Code[3]-Number[4]-Kind Code[5] *(if known)*	Publication Date MM-DD-YYYY	Name of Patentee or Applicant of Cited Document	Pages, Columns, Lines, Where Relevant Passages Or Relevant Figures Appear	T[6]

Examiner Signature		Date Considered	

*EXAMINER: Initial if reference considered, whether or not citation is in conformance with MPEP 609. Draw line through citation if not in conformance and not considered. Include copy of this form with next communication to applicant. [1] Applicant's unique citation designation number (optional). [2] See Kinds Codes of USPTO Patent Documents at www.uspto.gov or MPEP 901.04. [3] Enter Office that issued the document, by the two-letter code (WIPO Standard ST.3). [4] For Japanese patent documents, the indication of the year of the reign of the Emperor must precede the serial number of the patent document. [5] Kind of document by the appropriate symbols as indicated on the document under WIPO Standard ST.16 if possible. [6] Applicant is to place a check mark here if English language Translation is attached.

This collection of information is required by 37 CFR 1.97 and 1.98. The information is required to obtain or retain a benefit by the public which is to file (and by the USPTO to process) an application. Confidentiality is governed by 35 U.S.C. 122 and 37 CFR 1.14. This collection is estimated to take 2 hours to complete, including gathering, preparing, and submitting the completed application form to the USPTO. Time will vary depending upon the individual case. Any comments on the amount of time you require to complete this form and/or suggestions for reducing this burden, should be sent to the Chief Information Officer, U.S. Patent and Trademark Office, P.O. Box 1450, Alexandria, VA 22313-1450. DO NOT SEND FEES OR COMPLETED FORMS TO THIS ADDRESS. **SEND TO: Commissioner for Patents, P.O. Box 1450, Alexandria, VA 22313-1450.**

If you need assistance in completing the form, call 1-800-PTO-9199 (1-800-786-9199) and select option 2.

Under the Paperwork Reduction Act of 1995, no persons are required to respond to a collection of information unless it contains a valid OMB control number.

Substitute for form 1449/PTO

INFORMATION DISCLOSURE STATEMENT BY APPLICANT

(Use as many sheets as necessary)

Sheet 2 of 2

	Complete if Known
Application Number	17/977,136
Filing Date	October 31, 2022
First Named Inventor	Matthew LENNOX
Art Unit	TBD
Examiner Name	TBD
Attorney Docket Number	2021_01B

NON PATENT LITERATURE DOCUMENTS

Examiner Initials*	Cite No.[1]	Include name of the author (in CAPITAL LETTERS), title of the article (when appropriate), title of the item (book, magazine, journal, serial, symposium, catalog, etc.), date, page(s), volume-issue number(s), publisher, city and/or country where published.	T[2]
		Notice of Re-Examination, dated August 4, 2021, Australian Patent Office for Australian Patent No. 2019101672, pages 1-25.	
		Notice of Re-Examination, dated May 23, 2022, Australian Patent Office for Australian Patent No. 2020103984, pages 1-13.	
		Notice of Re-Examination (Requested by 3rd party), dated February 3, 2022, Australian Patent Office for Australian Patent No. 2020103984, pages 1-26.	
		Re-Examination Report, dated March 28,2022, Australian Patent Office for Australian Patent No. 2020103984, pages 1-4.	
		Re-Examination Report, dated July 1,2022, Australian Patent Office for Australian Patent No. 2020103984, pages 1-6.	
		https://www.youtube.com/watch?v=fKTIAqd8VT4, dated June 3, 2008.	
		https://www.youtube.com/watch?v=dLM7QolyiKM, dated July 15, 2010.	
		https://www.youtube.com/watch?v=anAQKjUIsuA&t=106s, dated January 28, 2015.	

Examiner Signature		Date Considered	

*EXAMINER: Initial if reference considered, whether or not citation is in conformance with MPEP 609. Draw line through citation if not in conformance and not considered. Include copy of this form with next communication to applicant.

1 Applicant's unique citation designation number (optional). 2 Applicant is to place a check mark here if English language Translation is attached.

This collection of information is required by 37 CFR 1.98. The information is required to obtain or retain a benefit by the public which is to file (and by the USPTO to process) an application. Confidentiality is governed by 35 U.S.C. 122 and 37 CFR 1.14. This collection is estimated to take 2 hours to complete, including gathering, preparing, and submitting the completed application form to the USPTO. Time will vary depending upon the individual case. Any comments on the amount of time you require to complete this form and/or suggestions for reducing this burden, should be sent to the Chief Information Officer, U.S. Patent and Trademark Office, P.O. Box 1450, Alexandria, VA 22313-1450. DO NOT SEND FEES OR COMPLETED FORMS TO THIS ADDRESS. **SEND TO: Commissioner for Patents, P.O. Box 1450, Alexandria, VA 22313-1450.**

If you need assistance in completing the form, call 1-800-PTO-9199 (1-800-786-9199) and select option 2.

IN THE UNITED STATES PATENT AND TRADEMARK OFFICE

In re application of	:	**Confirmation No. 7315**
Matthew LENNOX et al.	:	Applicant Reference No. 2021_01B
Serial No. 17/977,136	:	Group Art Unit No. TBD
Filed October 31, 2022	:	Examiner TBD

ROOF AND WALL COVER SYSTEM

INFORMATION DISCLOSURE STATEMENT

Commissioner for Patents
P.O. Box 1450
Alexandria, VA 22313-1450

Sir:

Pursuant to the provisions of 37 CFR 1.56, 1.97 and 1.98, Applicant requests consideration of the information listed on attached Form PTO/SB/08.

1a. [X] This Information Disclosure Statement is submitted:

within three months of the filing date (or of entry into the National Stage) of the above-entitled application, **or**

before the mailing of a first Office Action on the merits or the mailing of a first Office Action after the filing of an RCE,

and thus no certification and/or fee is required.

1b. [] This Information Disclosure Statement is submitted

after the events of above paragraph 1a and prior to the mailing date of a final Office Action or a Notice of Allowance or an action which otherwise closes prosecution in the application, and thus:

(1) [] the certification of paragraph 2 below is provided, **or**
(2) [] the fee of $240.00 specified in 37 CFR 1.17(p) is enclosed.

1c. [] This Information Disclosure Statement is submitted:

after the mailing date of a final Office Action or Notice of Allowance or action which otherwise closes prosecution in the application, and prior to payment of the issue fee, and thus:

the certification of paragraph 2 below is provided, <u>and</u>

the fee of $240.00 specified in 37 CFR 1.17(p) is enclosed.

2. It is hereby certified

a. [] that each item of information contained in this Information Disclosure Statement was first cited in any communication from a foreign patent office in a counterpart foreign application not more than three months prior to the filing of the Statement (37 C.F.R. § 1.97(e)(1)), or

b. [] that no item of information contained in the Information Disclosure Statement was cited in a communication from a foreign patent office in a counterpart foreign application and, to the knowledge of the person signing the certification after making reasonable inquiry, was known to any individual designated in §1.56(c) more than three months prior to the filing of the Statement (37 C.F.R. 1.97(e)(2)).

4. For each non-English language reference listed on the attached Form PTO/SB/08, reference is made to one or more of the following:

a. [] a full or partial English language translation submitted herewith,
b. [] a foreign patent office search report or office action (in the English language) submitted herewith,
c. [] the concise explanation contained in the specification of the present application at page,
d. [] the concise explanation set forth in the attached English language abstract,
e. [] the concise explanation set forth on the Form PTO/SB/08
f. [] an International Search Report submitted herewith.

5. [] An Office Action from a foreign Patent Office citing one or more of the references is enclosed.

Matthew LENNOX et al.

Respectfully submitted,

By: /Kevin McDermott/
Kevin McDermott
Registration No. 48,113
Attorney for Applicants

Telephone (703) 380-1795
November 18, 2022

Electronic Acknowledgement Receipt

EFS ID:	47050948
Application Number:	17977136
International Application Number:	
Confirmation Number:	7315
Title of Invention:	ROOF AND WALL COVER SYSTEM
First Named Inventor/Applicant Name:	Matthew LENNOX
Customer Number:	130554
Filer:	Kevin McDermott
Filer Authorized By:	
Attorney Docket Number:	2021_01B
Receipt Date:	18-NOV-2022
Filing Date:	
Time Stamp:	09:49:48
Application Type:	Utility under 35 USC 111(a)

Payment information:

Submitted with Payment	no

File Listing:

Document Number	Document Description	File Name	File Size(Bytes)/ Message Digest	Multi Part /.zip	Pages (if appl.)
1	Information Disclosure Statement (IDS) Form (SB08)	SB-08-for-filing.pdf	275142 d742b653ec515dfe871efd91d306694976c9d890	no	2

Warnings:

Information:					
This is not an USPTO supplied IDS fillable form					
2	Transmittal Letter	IDS-Transmittal.pdf	84789 e666751865d3dcf4902d11b0370d22c6f250ff57	no	3
Warnings:					
Information:					
			Total Files Size (in bytes):	359931	

This Acknowledgement Receipt evidences receipt on the noted date by the USPTO of the indicated documents, characterized by the applicant, and including page counts, where applicable. It serves as evidence of receipt similar to a Post Card, as described in MPEP 503.

New Applications Under 35 U.S.C. 111
If a new application is being filed and the application includes the necessary components for a filing date (see 37 CFR 1.53(b)-(d) and MPEP 506), a Filing Receipt (37 CFR 1.54) will be issued in due course and the date shown on this Acknowledgement Receipt will establish the filing date of the application.
National Stage of an International Application under 35 U.S.C. 371
If a timely submission to enter the national stage of an international application is compliant with the conditions of 35 U.S.C. 371 and other applicable requirements a Form PCT/DO/EO/903 indicating acceptance of the application as a national stage submission under 35 U.S.C. 371 will be issued in addition to the Filing Receipt, in due course.
New International Application Filed with the USPTO as a Receiving Office
If a new international application is being filed and the international application includes the necessary components for an international filing date (see PCT Article 11 and MPEP 1810), a Notification of the International Application Number and of the International Filing Date (Form PCT/RO/105) will be issued in due course, subject to prescriptions concerning national security, and the date shown on this Acknowledgement Receipt will establish the international filing date of the application.

Electronic Acknowledgement Receipt

EFS ID:	47051082
Application Number:	17977136
International Application Number:	
Confirmation Number:	7315
Title of Invention:	ROOF AND WALL COVER SYSTEM
First Named Inventor/Applicant Name:	Matthew LENNOX
Customer Number:	130554
Filer:	Kevin McDermott
Filer Authorized By:	
Attorney Docket Number:	2021_01B
Receipt Date:	18-NOV-2022
Filing Date:	
Time Stamp:	10:06:12
Application Type:	Utility under 35 USC 111(a)

Payment information:

Submitted with Payment	no

File Listing:

Document Number	Document Description	File Name	File Size(Bytes)/ Message Digest	Multi Part /.zip	Pages (if appl.)
1	Non Patent Literature	Notice-of-Re-examination-August-4-2021-PRIMO-PDF.pdf	1189141 3b464a523c89798f8dffb70f14edf8b2f4e2c96e	no	25

Warnings:

Information:					
2	Non Patent Literature	Notice-of-Re-Examination-May-23-2022-PRIMO-PDF.pdf	701992 de3056fa3d5ebd3625182a4f38a5a00cf37aa606	no	13
Warnings:					
Information:					
3	Non Patent Literature	Notice-of-Re-examination-Requested-by-Third-Party-Feb-3-2022-PRIMO-PDF.pdf	1256695 ec13b976940fd9911b91fb7632620a443cfb304c	no	26
Warnings:					
Information:					
4	Non Patent Literature	Re-examinaiton-Report-March-28-2022-PRIMO-PDF.pdf	89274 0a7fe05a8cc408413624833079d06f65a81bc2c3	no	4
Warnings:					
Information:					
5	Non Patent Literature	Re-examination-Report-July-1-2022-PRIMO-PDF.pdf	107296 ed17507f1efadda19616de42f944a2399a62921b	no	6
Warnings:					
Information:					
			Total Files Size (in bytes):	3344398	

This Acknowledgement Receipt evidences receipt on the noted date by the USPTO of the indicated documents, characterized by the applicant, and including page counts, where applicable. It serves as evidence of receipt similar to a Post Card, as described in MPEP 503.

<u>New Applications Under 35 U.S.C. 111</u>
If a new application is being filed and the application includes the necessary components for a filing date (see 37 CFR 1.53(b)-(d) and MPEP 506), a Filing Receipt (37 CFR 1.54) will be issued in due course and the date shown on this Acknowledgement Receipt will establish the filing date of the application.
<u>National Stage of an International Application under 35 U.S.C. 371</u>
If a timely submission to enter the national stage of an international application is compliant with the conditions of 35 U.S.C. 371 and other applicable requirements a Form PCT/DO/EO/903 indicating acceptance of the application as a national stage submission under 35 U.S.C. 371 will be issued in addition to the Filing Receipt, in due course.
<u>New International Application Filed with the USPTO as a Receiving Office</u>
If a new international application is being filed and the international application includes the necessary components for an international filing date (see PCT Article 11 and MPEP 1810), a Notification of the International Application Number and of the International Filing Date (Form PCT/RO/105) will be issued in due course, subject to prescriptions concerning national security, and the date shown on this Acknowledgement Receipt will establish the international filing date of the application.

PTO/SB/08a (01-09)
Approved for use through 02/28/2009. OMB 0651-0031
U.S. Patent and Trademark Office; U.S. DEPARTMENT OF COMMERCE
Under the Paperwork Reduction Act of 1995, no persons are required to respond to a collection of information unless it contains a valid OMB control number.

Substitute for form 1449/PTO

INFORMATION DISCLOSURE STATEMENT BY APPLICANT

(Use as many sheets as necessary)

Sheet 1 of 1

Complete if Known	
Application Number	17/977,136
Filing Date	October 31, 2022
First Named Inventor	Matthew LENNOX
Art Unit	TBD
Examiner Name	TBD
Attorney Docket Number	2021_01B

U. S. PATENT DOCUMENTS

Examiner Initials*	Cite No.[1]	Document Number Number-Kind Code[2] (if known)	Publication Date MM-DD-YYYY	Name of Patentee or Applicant of Cited Document	Pages, Columns, Lines, Where Relevant Passages or Relevant Figures Appear
		US- 2007/0266643	11-22-2007	Cowvins	
		US-			
		US-			
		US-			
		US-			
		US-			
		US-			
		US-			
		US-			
		US-			
		US-			
		US-			
		US-			
		US-			
		US-			
		US-			
		US-			
		US-			

FOREIGN PATENT DOCUMENTS

Examiner Initials*	Cite No.[1]	Foreign Patent Document Country Code[3]-Number[4]-Kind Code[5] (if known)	Publication Date MM-DD-YYYY	Name of Patentee or Applicant of Cited Document	Pages, Columns, Lines, Where Relevant Passages Or Relevant Figures Appear	T[6]

Examiner Signature		Date Considered	

*EXAMINER: Initial if reference considered, whether or not citation is in conformance with MPEP 609. Draw line through citation if not in conformance and not considered. Include copy of this form with next communication to applicant. [1] Applicant's unique citation designation number (optional). [2] See Kinds Codes of USPTO Patent Documents at www.uspto.gov or MPEP 901.04. [3] Enter Office that issued the document, by the two-letter code (WIPO Standard ST.3). [4] For Japanese patent documents, the indication of the year of the reign of the Emperor must precede the serial number of the patent document. [5] Kind of document by the appropriate symbols as indicated on the document under WIPO Standard ST.16 if possible. [6] Applicant is to place a check mark here if English language Translation is attached.

This collection of information is required by 37 CFR 1.97 and 1.98. The information is required to obtain or retain a benefit by the public which is to file (and by the USPTO to process) an application. Confidentiality is governed by 35 U.S.C. 122 and 37 CFR 1.14. This collection is estimated to take 2 hours to complete, including gathering, preparing, and submitting the completed application form to the USPTO. Time will vary depending upon the individual case. Any comments on the amount of time you require to complete this form and/or suggestions for reducing this burden, should be sent to the Chief Information Officer, U.S. Patent and Trademark Office, P.O. Box 1450, Alexandria, VA 22313-1450. DO NOT SEND FEES OR COMPLETED FORMS TO THIS ADDRESS. **SEND TO: Commissioner for Patents, P.O. Box 1450, Alexandria, VA 22313-1450.**

If you need assistance in completing the form, call 1-800-PTO-9199 (1-800-786-9199) and select option 2.

Electronic Acknowledgement Receipt

EFS ID:	47052354
Application Number:	17977136
International Application Number:	
Confirmation Number:	7315
Title of Invention:	ROOF AND WALL COVER SYSTEM
First Named Inventor/Applicant Name:	Matthew LENNOX
Customer Number:	130554
Filer:	Kevin McDermott
Filer Authorized By:	
Attorney Docket Number:	2021_01B
Receipt Date:	18-NOV-2022
Filing Date:	
Time Stamp:	11:51:58
Application Type:	Utility under 35 USC 111(a)

Payment information:

Submitted with Payment	no

File Listing:

Document Number	Document Description	File Name	File Size(Bytes)/ Message Digest	Multi Part /.zip	Pages (if appl.)
1	Information Disclosure Statement (IDS) Form (SB08)	2nd-FORM-PTO-SB-08-for-2nd-filing.pdf	152120 258b72ed6c7aefd17e09bb3bb21c7c71889ada8f	no	1

Warnings:

Information:	
This is not an USPTO supplied IDS fillable form	
Total Files Size (in bytes):	152120

This Acknowledgement Receipt evidences receipt on the noted date by the USPTO of the indicated documents, characterized by the applicant, and including page counts, where applicable. It serves as evidence of receipt similar to a Post Card, as described in MPEP 503.

New Applications Under 35 U.S.C. 111
If a new application is being filed and the application includes the necessary components for a filing date (see 37 CFR 1.53(b)-(d) and MPEP 506), a Filing Receipt (37 CFR 1.54) will be issued in due course and the date shown on this Acknowledgement Receipt will establish the filing date of the application.
National Stage of an International Application under 35 U.S.C. 371
If a timely submission to enter the national stage of an international application is compliant with the conditions of 35 U.S.C. 371 and other applicable requirements a Form PCT/DO/EO/903 indicating acceptance of the application as a national stage submission under 35 U.S.C. 371 will be issued in addition to the Filing Receipt, in due course.
New International Application Filed with the USPTO as a Receiving Office
If a new international application is being filed and the international application includes the necessary components for an international filing date (see PCT Article 11 and MPEP 1810), a Notification of the International Application Number and of the International Filing Date (Form PCT/RO/105) will be issued in due course, subject to prescriptions concerning national security, and the date shown on this Acknowledgement Receipt will establish the international filing date of the application.

UNITED STATES PATENT AND TRADEMARK OFFICE

UNITED STATES DEPARTMENT OF COMMERCE
United States Patent and Trademark Office
Address: COMMISSIONER FOR PATENTS
P.O. Box 1450
Alexandria, Virginia 22313-1450
www.uspto.gov

APPLICATION NUMBER	FILING or 371(c) DATE	GRP ART UNIT	FIL FEE REC'D	ATTY.DOCKET.NO	TOT CLAIMS	IND CLAIMS
17/977,136	10/31/2022		830	2021_01B	17	3

CONFIRMATION NO. 7315

FILING RECEIPT

OC000000051256291

130554
Kevin McDermott
1225 Round House Lane
Alexandria, VA 22314

Date Mailed: 12/01/2022

Receipt is acknowledged of this non-provisional utility patent application. The application will be taken up for examination in due course. Applicant will be notified as to the results of the examination. Any correspondence concerning the application must include the following identification information: the U.S. APPLICATION NUMBER, FILING DATE, NAME OF FIRST INVENTOR, and TITLE OF INVENTION. Fees transmitted by check or draft are subject to collection.

Please verify the accuracy of the data presented on this receipt. If an error is noted on this Filing Receipt, please submit a written request for a corrected Filing Receipt, including a properly marked-up ADS showing the changes with strike-through for deletions and underlining for additions. If you received a "Notice to File Missing Parts" or other Notice requiring a response for this application, please submit any request for correction to this Filing Receipt with your reply to the Notice. When the USPTO processes the reply to the Notice, the USPTO will generate another Filing Receipt incorporating the requested corrections provided that the request is grantable.

Inventor(s)

Matthew LENNOX, Cronulla, AUSTRALIA;
Rodney BURGE, Miranda, AUSTRALIA;
Adam FARROW, Miranda, AUSTRALIA;

Applicant(s)

System Stormseal Pty Ltd, Rockdale, AUSTRALIA;

Power of Attorney: The patent practitioners associated with Customer Number 130554

Domestic Priority data as claimed by applicant

This application is a CON of 17/519,787 11/05/2021
which is a CIP of 15/783,813 10/13/2017 PAT 11,168,484
which is a CON of 12/995,966 05/31/2011 PAT 9,822,536
which is a 371 of PCT/AU2009/000685 06/09/2009

Foreign Applications (You may be eligible to benefit from the **Patent Prosecution Highway** program at the USPTO. Please see http://www.uspto.gov for more information.)
AUSTRALIA 2008202416 06/02/2008 No Access Code Provided
AUSTRALIA 2008203409 07/30/2008 No Access Code Provided
AUSTRALIA 2008101060 10/30/2008 No Access Code Provided
AUSTRALIA 2009200232 01/22/2009 No Access Code Provided

Permission to Access Application via Priority Document Exchange: Yes

Permission to Access Search Results: Yes

Applicant may provide or rescind an authorization for access using Form PTO/SB/39 or Form PTO/SB/69 as appropriate.

If Required, Foreign Filing License Granted: 11/30/2022
The country code and number of your priority application, to be used for filing abroad under the Paris Convention, is **US 17/977,136**
Projected Publication Date: 03/09/2023
Non-Publication Request: No
Early Publication Request: No
**** SMALL ENTITY ****
Title

ROOF AND WALL COVER SYSTEM

Preliminary Class

Statement under 37 CFR 1.55 or 1.78 for AIA (First Inventor to File) Transition Applications: No

PROTECTING YOUR INVENTION OUTSIDE THE UNITED STATES

Since the rights granted by a U.S. patent extend only throughout the territory of the United States and have no effect in a foreign country, an inventor who wishes patent protection in another country must apply for a patent in a specific country or in regional patent offices. Applicants may wish to consider the filing of an international application under the Patent Cooperation Treaty (PCT). An international (PCT) application generally has the same effect as a regular national patent application in each PCT-member country. The PCT process **simplifies** the filing of patent applications on the same invention in member countries, but **does not result** in a grant of "an international patent" and does not eliminate the need of applicants to file additional documents and fees in countries where patent protection is desired.

Almost every country has its own patent law, and a person desiring a patent in a particular country must make an application for patent in that country in accordance with its particular laws. Since the laws of many countries differ in various respects from the patent law of the United States, applicants are advised to seek guidance from specific foreign countries to ensure that patent rights are not lost prematurely.

Applicants also are advised that in the case of inventions made in the United States, the Director of the USPTO must issue a license before applicants can apply for a patent in a foreign country. The filing of a U.S. patent application serves as a request for a foreign filing license. The application's filing receipt contains further information and guidance as to the status of applicant's license for foreign filing.

Applicants may wish to consult the USPTO booklet, "General Information Concerning Patents" (specifically, the section entitled "Treaties and Foreign Patents") for more information on timeframes and deadlines for filing foreign patent applications. The guide is available either by contacting the USPTO Contact Center at 800-786-9199, or it can be viewed on the USPTO website at http://www.uspto.gov/web/offices/pac/doc/general/index.html.

For information on preventing theft of your intellectual property (patents, trademarks and copyrights), you may wish to consult the U.S. Government website, http://www.stopfakes.gov. Part of a Department of Commerce initiative, this website includes self-help "toolkits" giving innovators guidance on how to protect intellectual property in specific

countries such as China, Korea and Mexico. For questions regarding patent enforcement issues, applicants may call the U.S. Government hotline at 1-866-999-HALT (1-866-999-4258).

LICENSE FOR FOREIGN FILING UNDER

Title 35, United States Code, Section 184

Title 37, Code of Federal Regulations, 5.11 & 5.15

GRANTED

The applicant has been granted a license under 35 U.S.C. 184, if the phrase "IF REQUIRED, FOREIGN FILING LICENSE GRANTED" followed by a date appears on this form. Such licenses are issued in all applications where the conditions for issuance of a license have been met, regardless of whether or not a license may be required as set forth in 37 CFR 5.15. The scope and limitations of this license are set forth in 37 CFR 5.15(a) unless an earlier license has been issued under 37 CFR 5.15(b). The license is subject to revocation upon written notification. The date indicated is the effective date of the license, unless an earlier license of similar scope has been granted under 37 CFR 5.13 or 5.14.

This license is to be retained by the licensee and may be used at any time on or after the effective date thereof unless it is revoked. This license is automatically transferred to any related applications(s) filed under 37 CFR 1.53(d). This license is not retroactive.

The grant of a license does not in any way lessen the responsibility of a licensee for the security of the subject matter as imposed by any Government contract or the provisions of existing laws relating to espionage and the national security or the export of technical data. Licensees should apprise themselves of current regulations especially with respect to certain countries, of other agencies, particularly the Office of Defense Trade Controls, Department of State (with respect to Arms, Munitions and Implements of War (22 CFR 121-128)); the Bureau of Industry and Security, Department of Commerce (15 CFR parts 730-774); the Office of Foreign AssetsControl, Department of Treasury (31 CFR Parts 500+) and the Department of Energy.

NOT GRANTED

No license under 35 U.S.C. 184 has been granted at this time, if the phrase "IF REQUIRED, FOREIGN FILING LICENSE GRANTED" DOES NOT appear on this form. Applicant may still petition for a license under 37 CFR 5.12, if a license is desired before the expiration of 6 months from the filing date of the application. If 6 months has lapsed from the filing date of this application and the licensee has not received any indication of a secrecy order under 35 U.S.C. 181, the licensee may foreign file the application pursuant to 37 CFR 5.15(b).

SelectUSA

The United States represents the largest, most dynamic marketplace in the world and is an unparalleled location for business investment, innovation, and commercialization of new technologies. The U.S. offers tremendous resources and advantages for those who invest and manufacture goods here. Through SelectUSA, our nation works to promote and facilitate business investment. SelectUSA provides information assistance to the international investor community; serves as an ombudsman for existing and potential investors; advocates on behalf of U.S. cities, states, and regions competing for global investment; and counsels U.S. economic development organizations on investment attraction best practices. To learn more about why the United States is the best country in the world to develop

technology, manufacture products, deliver services, and grow your business, visit http://www.SelectUSA.gov or call +1-202-482-6800.

PATENT APPLICATION FEE DETERMINATION RECORD

Substitute for Form PTO-875

Application or Docket Number
17/977,136

APPLICATION AS FILED - PART I

FOR	(Column 1) NUMBER FILED	(Column 2) NUMBER EXTRA	SMALL ENTITY RATE($)	SMALL ENTITY FEE($)	OR	OTHER THAN SMALL ENTITY RATE($)	OTHER THAN SMALL ENTITY FEE($)
BASIC FEE (37 CFR 1.16(a), (b), or (c))	N/A	N/A	N/A	80		N/A	
SEARCH FEE (37 CFR 1.16(k), (i), or (m))	N/A	N/A	N/A	350		N/A	
EXAMINATION FEE (37 CFR 1.16(o), (p), or (q))	N/A	N/A	N/A	400		N/A	
TOTAL CLAIMS (37 CFR 1.16(i))	17 minus 20 =	* 0	x =	0	OR		
INDEPENDENT CLAIMS (37 CFR 1.16(h))	3 minus 3 =	*	x =	0			
APPLICATION SIZE FEE (37 CFR 1.16(s))	If the specification and drawings exceed 100 sheets of paper, the application size fee due is $310 ($155 for small entity) for each additional 50 sheets or fraction thereof. See 35 U.S.C. 41(a)(1)(G) and 37 CFR 1.16(s).			0			
MULTIPLE DEPENDENT CLAIM PRESENT (37 CFR 1.16(j))				0			
* If the difference in column 1 is less than zero, enter "0" in column 2.			TOTAL	830		TOTAL	

APPLICATION AS AMENDED - PART II

		(Column 1) CLAIMS REMAINING AFTER AMENDMENT		(Column 2) HIGHEST NUMBER PREVIOUSLY PAID FOR	(Column 3) PRESENT EXTRA	SMALL ENTITY RATE($)	SMALL ENTITY ADDITIONAL FEE($)	OR	OTHER THAN SMALL ENTITY RATE($)	OTHER THAN SMALL ENTITY ADDITIONAL FEE($)
AMENDMENT A	Total (37 CFR 1.16(i))	*	Minus	**	=	x =		OR	x =	
AMENDMENT A	Independent (37 CFR 1.16(h))	*	Minus	***	=	x =		OR	x =	
AMENDMENT A	Application Size Fee (37 CFR 1.16(s))									
AMENDMENT A	FIRST PRESENTATION OF MULTIPLE DEPENDENT CLAIM (37 CFR 1.16(j))							OR		
						TOTAL ADD'L FEE		OR	TOTAL ADD'L FEE	

		(Column 1) CLAIMS REMAINING AFTER AMENDMENT		(Column 2) HIGHEST NUMBER PREVIOUSLY PAID FOR	(Column 3) PRESENT EXTRA	RATE($)	ADDITIONAL FEE($)		RATE($)	ADDITIONAL FEE($)
AMENDMENT B	Total (37 CFR 1.16(i))	*	Minus	**	=	x =		OR	x =	
AMENDMENT B	Independent (37 CFR 1.16(h))	*	Minus	***	=	x =		OR	x =	
AMENDMENT B	Application Size Fee (37 CFR 1.16(s))									
AMENDMENT B	FIRST PRESENTATION OF MULTIPLE DEPENDENT CLAIM (37 CFR 1.16(j))							OR		
						TOTAL ADD'L FEE		OR	TOTAL ADD'L FEE	

* If the entry in column 1 is less than the entry in column 2, write "0" in column 3.
** If the "Highest Number Previously Paid For" IN THIS SPACE is less than 20, enter "20".
*** If the "Highest Number Previously Paid For" IN THIS SPACE is less than 3, enter "3".
The "Highest Number Previously Paid For" (Total or Independent) is the highest found in the appropriate box in column 1.

IN THE UNITED STATES PATENT AND TRADEMARK OFFICE

In re application of	:	**Confirmation No. 7315**
Matthew LENNOX et al.	:	Applicant Reference No. 2021_01B
Serial No. 17/977,136	:	Group Art Unit No. TBD
Filed October 31, 2022	:	Examiner TBD

ROOF AND WALL COVER SYSTEM

CERTIFIED COPY IN ANOTHER U.S. PATENT OR APPLICATION UNDER 37 C.F.R. 1.55

Commissioner for Patents
P.O. Box 1450
Alexandria, VA 22313-1450

Sir:

This is a continuation application of U.S. patent application serial no. 17/519,787, which is a continuation-in-part application of U.S. patent application serial no. 15/783,813 which is a continuation of U.S. patent application serial no. 12/995,966. This application also claims foreign priority to Australian Patent Application Nos. 2008202416, 2008203409, 2008101060, and 2009200232 certified copies of which were filed in patent application serial no. 12/995,966.

Please contact the undersigned with any questions.

Respectfully Submitted,

Matthew LENNOX et al.

By: /Kevin McDermott/
Kevin McDermott
Registration No. 48,113
Attorney for Applicant

Alexandria, VA 22314
Telephone 703-380-1795
December 5, 2022

Electronic Acknowledgement Receipt

EFS ID:	47147201
Application Number:	17977136
International Application Number:	
Confirmation Number:	7315
Title of Invention:	ROOF AND WALL COVER SYSTEM
First Named Inventor/Applicant Name:	Matthew LENNOX
Customer Number:	130554
Filer:	Kevin McDermott
Filer Authorized By:	
Attorney Docket Number:	2021_01B
Receipt Date:	05-DEC-2022
Filing Date:	31-OCT-2022
Time Stamp:	19:14:10
Application Type:	Utility under 35 USC 111(a)

Payment information:

Submitted with Payment	no

File Listing:

Document Number	Document Description	File Name	File Size(Bytes)/ Message Digest	Multi Part /.zip	Pages (if appl.)
1	Miscellaneous Incoming Letter	Notice-re-certified-copy-of-proiority-doc-in-parent.pdf	59957 8b57bb94fbf458a52e337102a5eb730c1c682f58	no	1

Warnings:

Information:	
Total Files Size (in bytes):	59957

This Acknowledgement Receipt evidences receipt on the noted date by the USPTO of the indicated documents, characterized by the applicant, and including page counts, where applicable. It serves as evidence of receipt similar to a Post Card, as described in MPEP 503.

New Applications Under 35 U.S.C. 111
If a new application is being filed and the application includes the necessary components for a filing date (see 37 CFR 1.53(b)-(d) and MPEP 506), a Filing Receipt (37 CFR 1.54) will be issued in due course and the date shown on this Acknowledgement Receipt will establish the filing date of the application.
National Stage of an International Application under 35 U.S.C. 371
If a timely submission to enter the national stage of an international application is compliant with the conditions of 35 U.S.C. 371 and other applicable requirements a Form PCT/DO/EO/903 indicating acceptance of the application as a national stage submission under 35 U.S.C. 371 will be issued in addition to the Filing Receipt, in due course.
New International Application Filed with the USPTO as a Receiving Office
If a new international application is being filed and the international application includes the necessary components for an international filing date (see PCT Article 11 and MPEP 1810), a Notification of the International Application Number and of the International Filing Date (Form PCT/RO/105) will be issued in due course, subject to prescriptions concerning national security, and the date shown on this Acknowledgement Receipt will establish the international filing date of the application.

UNITED STATES PATENT AND TRADEMARK OFFICE

UNITED STATES DEPARTMENT OF COMMERCE
United States Patent and Trademark Office
Address: COMMISSIONER FOR PATENTS
P.O. Box 1450
Alexandria, Virginia 22313-1450
www.uspto.gov

APPLICATION NO.	FILING DATE	FIRST NAMED INVENTOR	ATTORNEY DOCKET NO.	CONFIRMATION NO.
17/977,136	10/31/2022	Matthew LENNOX	2021_01B	7315

130554 7590 01/06/2023
Kevin McDermott
1225 Round House Lane
Alexandria, VA 22314

EXAMINER
CENTRAL, DOCKET

ART UNIT	PAPER NUMBER
OPAP	

MAIL DATE	DELIVERY MODE
01/06/2023	PAPER

Please find below and/or attached an Office communication concerning this application or proceeding.

The time period for reply, if any, is set in the attached communication.

PTOL-90A (Rev. 04/07)

Decision Granting Request for Prioritized Examination (Track I)	**Application No.** 17/977,136	**Applicant(s)** LENNOX et al.	
	Examiner FIKIRTE A GEREMEW	**Art Unit** OMBL	**AIA (FITF) Status** No

1. THE REQUEST FILED 31 October 2022 IS **GRANTED** .

   The above-identified application has met the requirements for prioritized examination
   A. ☑ for an original nonprovisional application (Track I).
   B. ☐ for an application undergoing continued examination (RCE).

2. **The above-identified application will undergo prioritized examination**. The application will be accorded special status throughout its entire course of prosecution until one of the following occurs:

   A. filing a **petition for extension of time** to extend the time period for filing a reply;

   B. filing an **amendment to amend the application to contain more than four independent claims, more than thirty total claims** , or a multiple dependent claim;

   C. filing a **request for continued examination** ;

   D. filing a notice of appeal;

   E. filing a request for suspension of action;

   F. mailing of a notice of allowance;

   G. mailing of a final Office action;

   H. completion of examination as defined in 37 CFR 41.102; or

   I. abandonment of the application.

Telephone inquiries with regard to this decision should be directed to FIKIRTE GEREMEW at (703) 756-1930. In his/her absence, calls may be directed to Petition Help Desk at (571) 272-3282.

/FIKIRTE A GEREMEW/ PROGRAM SUPPORT ASSISTANT, OMBL	

U.S. Patent and Trademark Office
PTO-2298 (Rev. 02-2012)

UNITED STATES PATENT AND TRADEMARK OFFICE

UNITED STATES DEPARTMENT OF COMMERCE
United States Patent and Trademark Office
Address: COMMISSIONER FOR PATENTS
P.O. Box 1450
Alexandria, Virginia 22313-1450
www.uspto.gov

APPLICATION NO.	FILING DATE	FIRST NAMED INVENTOR	ATTORNEY DOCKET NO.	CONFIRMATION NO.
17/977,136	10/31/2022	Matthew LENNOX	2021_01B	7315

130554 7590 01/25/2023
Kevin McDermott
312 South Payne Street
Alexandria, VA 22314

EXAMINER
GROSS, CARSON

ART UNIT	PAPER NUMBER
1746	

MAIL DATE	DELIVERY MODE
01/25/2023	PAPER

Please find below and/or attached an Office communication concerning this application or proceeding.

The time period for reply, if any, is set in the attached communication.

PTOL-90A (Rev. 04/07)

Office Action Summary	Application No. 17/977,136	Applicant(s) LENNOX et al.	
	Examiner CARSON GROSS	Art Unit 1746	AIA (FITF) Status No

-- The MAILING DATE of this communication appears on the cover sheet with the correspondence address --

Period for Reply

A SHORTENED STATUTORY PERIOD FOR REPLY IS SET TO EXPIRE 3 MONTHS FROM THE MAILING DATE OF THIS COMMUNICATION.

- Extensions of time may be available under the provisions of 37 CFR 1.136(a). In no event, however, may a reply be timely filed after SIX (6) MONTHS from the mailing date of this communication.
- If NO period for reply is specified above, the maximum statutory period will apply and will expire SIX (6) MONTHS from the mailing date of this communication.
- Failure to reply within the set or extended period for reply will, by statute, cause the application to become ABANDONED (35 U.S.C. § 133). Any reply received by the Office later than three months after the mailing date of this communication, even if timely filed, may reduce any earned patent term adjustment. See 37 CFR 1.704(b).

Status

1)☑ Responsive to communication(s) filed on 10/31/2022.

☐ A declaration(s)/affidavit(s) under **37 CFR 1.130(b)** was/were filed on _____.

2a)☐ This action is **FINAL.** 2b) ☑ This action is non-final.

3)☐ An election was made by the applicant in response to a restriction requirement set forth during the interview on _____; the restriction requirement and election have been incorporated into this action.

4)☐ Since this application is in condition for allowance except for formal matters, prosecution as to the merits is closed in accordance with the practice under *Ex parte Quayle*, 1935 C.D. 11, 453 O.G. 213.

Disposition of Claims*

5) ☑ Claim(s) 18-34 is/are pending in the application.

5a) Of the above claim(s) _____ is/are withdrawn from consideration.

6) ☐ Claim(s) _____ is/are allowed.

7) ☑ Claim(s) 18-34 is/are rejected.

8) ☐ Claim(s) _____ is/are objected to.

9) ☐ Claim(s) _____ are subject to restriction and/or election requirement

* If any claims have been determined allowable, you may be eligible to benefit from the **Patent Prosecution Highway** program at a participating intellectual property office for the corresponding application. For more information, please see http://www.uspto.gov/patents/init_events/pph/index.jsp or send an inquiry to **PPHfeedback@uspto.gov.**

Application Papers

10)☐ The specification is objected to by the Examiner.

11)☑ The drawing(s) filed on 10/31/2022 is/are: a)☑ accepted or b)☐ objected to by the Examiner.

Applicant may not request that any objection to the drawing(s) be held in abeyance. See 37 CFR 1.85(a).

Replacement drawing sheet(s) including the correction is required if the drawing(s) is objected to. See 37 CFR 1.121(d).

Priority under 35 U.S.C. § 119

12)☑ Acknowledgment is made of a claim for foreign priority under 35 U.S.C. § 119(a)-(d) or (f).

Certified copies:

a)☑ All b)☐ Some** c)☐ None of the:

1.☐ Certified copies of the priority documents have been received.

2.☑ Certified copies of the priority documents have been received in Application No. 12/995,966.

3.☐ Copies of the certified copies of the priority documents have been received in this National Stage application from the International Bureau (PCT Rule 17.2(a)).

** See the attached detailed Office action for a list of the certified copies not received.

Attachment(s)

1) ☑ Notice of References Cited (PTO-892)

2) ☑ Information Disclosure Statement(s) (PTO/SB/08a and/or PTO/SB/08b) Paper No(s)/Mail Date 11/18/2022 (2), 10/31/2022.

3) ☐ Interview Summary (PTO-413) Paper No(s)/Mail Date _____.

4) ☐ Other: _____.

DETAILED ACTION

Notice of Pre-AIA or AIA Status

The present application is being examined under the pre-AIA first to invent provisions. In the event the determination of the status of the application as subject to AIA 35 U.S.C. 102 and 103 (or as subject to pre-AIA 35 U.S.C. 102 and 103) is incorrect, any correction of the statutory basis for the rejection will not be considered a new ground of rejection if the prior art relied upon, and the rationale supporting the rejection, would be the same under either status.

Claim Rejections - 35 USC § 102

The following is a quotation of the appropriate paragraphs of pre-AIA 35 U.S.C. 102 that form the basis for the rejections under this section made in this Office action:

> A person shall be entitled to a patent unless –
>
> (b) the invention was patented or described in a printed publication in this or a foreign country or in public use or on sale in this country, more than one year prior to the date of application for patent in the United States.

Claims 23 and 29 are rejected under pre-AIA 35 U.S.C. 102(b) as being anticipated by Crook (US 2005/0217202).

Regarding claim 23, Crook teaches a method of covering a roof structure, the method comprising: cutting strips (33,35) from a roll (37) of heat shrinkable film, each strip having leading and trailing edges, applying the strips over a damaged portion of a roof such that leading and trailing edges of strips are mechanically attached to respective front and rear edges (17,19) of the roof with suitable fasteners, and heating the sheet such that it shrinks and conforms to the roof (See Figures; [0022]-[0073]).

Regarding claim 29, the method of Crook forms a system as claimed, the system comprising: the roof with a damaged portion and a length (i.e. the strips) of heat shrinkable film with leading and trailing

edges applied over the roof from the front to rear roof edges and covering the damaged portion, wherein the leading and trailing edges of strips are mechanically attached to respective front and rear roof edges with suitable fasteners, and wherein the length of film conforms to the roof due to heat shrinkage.

Claim Rejections - 35 USC § 103

The following is a quotation of pre-AIA 35 U.S.C. 103(a) which forms the basis for all obviousness rejections set forth in this Office action:

> (a) A patent may not be obtained though the invention is not identically disclosed or described as set forth in section 102, if the differences between the subject matter sought to be patented and the prior art are such that the subject matter as a whole would have been obvious at the time the invention was made to a person having ordinary skill in the art to which said subject matter pertains. Patentability shall not be negatived by the manner in which the invention was made.

The factual inquiries for establishing a background for determining obviousness under pre-AIA 35 U.S.C. 103(a) are summarized as follows:

1. Determining the scope and contents of the prior art.

2. Ascertaining the differences between the prior art and the claims at issue.

3. Resolving the level of ordinary skill in the pertinent art.

4. Considering objective evidence present in the application indicating obviousness or nonobviousness.

This application currently names joint inventors. In considering patentability of the claims under pre-AIA 35 U.S.C. 103(a), the examiner presumes that the subject matter of the various claims was commonly owned at the time any inventions covered therein were made absent any evidence to the contrary. Applicant is advised of the obligation under 37 CFR 1.56 to point out the inventor and invention dates of each claim that was not commonly owned at the time a later invention was made in

order for the examiner to consider the applicability of pre-AIA 35 U.S.C. 103(c) and potential pre-AIA 35 U.S.C. 102(e), (f) or (g) prior art under pre-AIA 35 U.S.C. 103(a).

Claims 18, 24, and 30 are rejected under pre-AIA 35 U.S.C. 103(a) as being unpatentable over Crook (US 2005/0217202) in view of Kelly (US 8,407,958) and Inzeo (US 6,851,229).

Crook teaches a method of covering a roof structure and a resulting system, as detailed above. Crook teaches that leading and trailing edges of the strips are attached to a wall at a roof edge by any suitable fastener (See Figures; [0029]; [0049]).

Crook does not expressly disclose attachment at an eaves or fascia of a roof structure or that a suitable fastener may include a batten around which the strips are wrapped, the batten then being attached to the eaves or fascia.

Regarding the use of a batten, Kelly teaches a method of attaching a waterproof membrane to a roof assembly, the method comprising: wrapping a membrane (46) around a stiff member (40) and attaching the stiff member to a side face of a wall (12) with fasteners (42) (See Figs. 2A and 2B; col. 2, line 62 to col. 3, line 62). The stiff member is a batten as claimed.

It would have been obvious to one of ordinary skill in the art at the time of invention that the "suitable fasteners" disclosed by Crook would include battens functioning in the claimed manner because Kelly teaches that battens were recognized in the prior art as being suitable for fastening waterproof membranes on roof structures.

Crook and Kelly teach fastening to a wall and do not expressly disclose attachment to a fascia or eaves.

Inzeo teaches a method in which a membrane is attached to a fascia of a roof by an anchor (See Figures; col. 1, line 1 to col. 4, line 45).

It would have been obvious to one of ordinary skill in the art at the time of invention that the strips of Crook could be attached to a fascia of a roof rather than the wall. Since it was known in the prior art to attach membranes to walls (as taught by Crook and Kelly) or to fascia (as taught by Inzeo), the substitution of one known attachment point for another would have been obvious. Furthermore, it would be a routine matter of design choice for one of ordinary skill to select an attachment point for a membrane. There is no advantage or new result achieved by attaching to eaves or fascia rather than a wall. As long as the point of attachment is structurally sound the result is the same and predictable. Therefore any attachment point, including a wall, eaves, fascia, soffit, rafters, nailers, or any other roof structure would have been obvious to one of ordinary skill in the art.

Claims 19-20 and 25-26 are rejected under pre-AIA 35 U.S.C. 103(a) as being unpatentable over Crook (US 2005/0217202) in view of Kelly (US 8,407,958) and Inzeo (US 6,851,229), as applied to claims 18 and 24 above, and further in view of Hubbard (US 5,935,357).

Crook, Kelly, and Inzeo combine to teach a method of covering a roof structure, as detailed above. Crook teaches that adjacent strips may be attached to one another along their edges by tape, fasteners, or tackiness (See [0066]), such joined strips forming a sheet with lateral edges.

Crook does not expressly disclose heat welding adjacent strips.

It would have been obvious to one of ordinary skill in the art at the time of invention to bond adjacent strips of Crook by heat welding. It is well known and conventional in the prior art to attach adjacent parallel roofing membrane strips by heat welding. Hubbard (US 5,935,357), for example, teaches a step of heat welding first and second membranes (12,14) to form a unitary ply of polymeric material on a roof (See Figures; col. 4, lines 52-65). Since adhesive bonding with tape or fasteners (as taught by Crook) and bonding by heat welding (as taught by Hubbard) were both recognized in the prior

art as being suitable techniques for bonding adjacent strips of roofing membranes, the substitution of one known technique for another would have been obvious to one of ordinary skill in the art.

Regarding claims 20 and 26, Crook teaches that the strips extend between first and second side edges (21,23) of the roof in addition to the front and rear edges (17,19) of the roof. Where the strips extend over side edges and are then conformed to the roof via heat, such strips are considered as being attached to the roof edges.

Claims 21-22 are rejected under pre-AIA 35 U.S.C. 103(a) as being unpatentable over Crook (US 2005/0217202) in view of Kelly (US 8,407,958) and Inzeo (US 6,851,229), as applied to claim 18 above, and further in view of Best (US 7,951,873).

Crook, Kelly, and Inzeo combine to teach a method of covering a roof structure, as detailed above.

Crook, Kelly, and Inzeo do not expressly disclose that the heat shrinkable film may be low density polyethylene with shrinking resins.

Best teaches low density polyethylene polymers which have heat shrinking properties and may be used as housewrap (See Summary of Invention; col. 15, lines 13-15; 28-35; col. 21, line 4 to col. 22, line 28). While Best does not use the exact phrase “shrinking resins”, there must be some polymeric component in the blend which shrinks in order to form a shrink wrap film, so the formulations of Best which form shrink wrap must therefore include some type of “shrinking resins” as claimed.

It would have been obvious to one of ordinary skill in the art at the time of invention to use the low density polyethylene formulations of Best to form the heat shrinkable film of Crook since Best teaches that such formulations were recognized in the prior art as being suitable for forming shrink wrap and housewrap, as detailed above.

Claims 27-28 and 33-34 are rejected under pre-AIA 35 U.S.C. 103(a) as being unpatentable over Crook (US 2005/0217202) in view of Best (US 7,951,873).

Crook teaches the method of claim 23 and the system of claim 29, as detailed above.

Crook does not expressly disclose that the heat shrinkable film may be low density polyethylene with shrinking resins.

Best teaches low density polyethylene polymers which have heat shrinking properties and may be used as housewrap (See Summary of Invention; col. 15, lines 13-15; 28-35; col. 21, line 4 to col. 22, line 28). While Best does not use the exact phrase “shrinking resins”, there must be some polymeric component in the blend which shrinks in order to form a shrink wrap film, so the formulations of Best which form shrink wrap must therefore include some type of “shrinking resins” as claimed.

It would have been obvious to one of ordinary skill in the art at the time of invention to use the low density polyethylene formulations of Best to form the heat shrinkable film of Crook since Best teaches that such formulations were recognized in the prior art as being suitable for forming shrink wrap and housewrap, as detailed above.

Claims 31-32 are rejected under pre-AIA 35 U.S.C. 103(a) as being unpatentable over Crook (US 2005/0217202) in view of Hubbard (US 5,935,357)

Crook teaches the system of claim 29, as detailed above. Crook teaches that adjacent strips may be attached to one another along their edges by tape or fasteners (See [0066]), such joined strips forming a sheet with lateral edges.

Crook does not expressly disclose adjacent strips which are bonded on their edges by heat welding.

It would have been obvious to one of ordinary skill in the art at the time of invention to bond adjacent strips of Crook by heat welding. It is well known and conventional in the prior art to attach

adjacent parallel roofing membrane strips by heat welding. Hubbard (US 5,935,357), for example, teaches a step of heat welding first and second membranes (12,14) to form a unitary ply of polymeric material on a roof (See Figures; col. 4, lines 52-65). Since adhesive bonding with tape or fasteners (as taught by Crook) and bonding by heat welding (as taught by Hubbard) were both recognized in the prior art as being suitable techniques for bonding adjacent strips of roofing membranes, the substitution of one known technique for another would have been obvious to one of ordinary skill in the art.

Regarding claim 32, Crook teaches that the strips extend between first and second side edges (21,23) of the roof in addition to the front and rear edges (17,19) of the roof. Where the strips extend over side edges and are then conformed to the roof via heat, such strips are considered as being attached to the roof edges.

Double Patenting

The nonstatutory double patenting rejection is based on a judicially created doctrine grounded in public policy (a policy reflected in the statute) so as to prevent the unjustified or improper timewise extension of the "right to exclude" granted by a patent and to prevent possible harassment by multiple assignees. A nonstatutory double patenting rejection is appropriate where the conflicting claims are not identical, but at least one examined application claim is not patentably distinct from the reference claim(s) because the examined application claim is either anticipated by, or would have been obvious over, the reference claim(s). See, e.g., *In re Berg*, 140 F.3d 1428, 46 USPQ2d 1226 (Fed. Cir. 1998); *In re Goodman*, 11 F.3d 1046, 29 USPQ2d 2010 (Fed. Cir. 1993); *In re Longi*, 759 F.2d 887, 225 USPQ 645 (Fed. Cir. 1985); *In re Van Ornum*, 686 F.2d 937, 214 USPQ 761 (CCPA 1982); *In re Vogel*, 422 F.2d 438, 164 USPQ 619 (CCPA 1970); *In re Thorington*, 418 F.2d 528, 163 USPQ 644 (CCPA 1969).

A timely filed terminal disclaimer in compliance with 37 CFR 1.321(c) or 1.321(d) may be used to overcome an actual or provisional rejection based on nonstatutory double patenting provided the

reference application or patent either is shown to be commonly owned with the examined application, or claims an invention made as a result of activities undertaken within the scope of a joint research agreement. See MPEP § 717.02 for applications subject to examination under the first inventor to file provisions of the AIA as explained in MPEP § 2159. See MPEP § 2146 *et seq.* for applications not subject to examination under the first inventor to file provisions of the AIA. A terminal disclaimer must be signed in compliance with 37 CFR 1.321(b).

The USPTO Internet website contains terminal disclaimer forms which may be used. Please visit www.uspto.gov/patent/patents-forms. The filing date of the application in which the form is filed determines what form (e.g., PTO/SB/25, PTO/SB/26, PTO/AIA/25, or PTO/AIA/26) should be used. A web-based eTerminal Disclaimer may be filled out completely online using web-screens. An eTerminal Disclaimer that meets all requirements is auto-processed and approved immediately upon submission. For more information about eTerminal Disclaimers, refer to www.uspto.gov/patents/process/file/efs/guidance/eTD-info-I.jsp.

Claims 18-28 are rejected on the ground of nonstatutory double patenting as being unpatentable over claims 1, 3-4, and 7 of U.S. Patent No. 9,822,536 (hereinafter '536). Although the claims at issue are not identical, they are not patentably distinct from each other because the claims of '536 contain nearly identical methods to those claimed. Any differences between the instant claims and those of '536 would have been obvious to one of ordinary skill in the art since all limitations of the instant claims were known in the prior art, as detailed in the preceding rejections.

Claims 18-28 are rejected on the ground of nonstatutory double patenting as being unpatentable over claims 1-3 of U.S. Patent No. 11,168,484 (hereinafter '484). Although the claims at issue are not identical, they are not patentably distinct from each other because the claims of '484 contain nearly identical methods to those claimed. Any differences between the instant claims and

those of '484 would have been obvious to one of ordinary skill in the art since all limitations of the instant claims were known in the prior art, as detailed in the preceding rejections.

Claims 18-28 are provisionally rejected on the ground of nonstatutory double patenting as being unpatentable over claims 1, 5-7, and 9-17 of copending Application No. 17/519,787 (reference application). Although the claims at issue are not identical, they are not patentably distinct from each other because the claims of the reference application contain nearly identical methods to those claimed. Any differences between the instant claims and those of the reference application would have been obvious to one of ordinary skill in the art since all limitations of the instant claims were known in the prior art, as detailed in the preceding rejections.

This is a provisional nonstatutory double patenting rejection because the patentably indistinct claims have not in fact been patented.

Conclusion

Any inquiry concerning this communication or earlier communications from the examiner should be directed to CARSON GROSS whose telephone number is (571)270-7657. The examiner can normally be reached Monday-Friday 9am-5pm Eastern.

Examiner interviews are available via telephone, in-person, and video conferencing using a USPTO supplied web-based collaboration tool. To schedule an interview, applicant is encouraged to use the USPTO Automated Interview Request (AIR) at http://www.uspto.gov/interviewpractice.

If attempts to reach the examiner by telephone are unsuccessful, the examiner's supervisor, Michael Orlando can be reached on (571)270-5038. The fax phone number for the organization where this application or proceeding is assigned is 571-273-8300.

Information regarding the status of published or unpublished applications may be obtained from Patent Center. Unpublished application information in Patent Center is available to registered users. To

file and manage patent submissions in Patent Center, visit: https://patentcenter.uspto.gov. Visit https://www.uspto.gov/patents/apply/patent-center for more information about Patent Center and https://www.uspto.gov/patents/docx for information about filing in DOCX format. For additional questions, contact the Electronic Business Center (EBC) at 866-217-9197 (toll-free). If you would like assistance from a USPTO Customer Service Representative, call 800-786-9199 (IN USA OR CANADA) or 571-272-1000.

/CARSON GROSS/
Primary Examiner, Art Unit 1746

Notice of References Cited	Application/Control No. 17/977,136	Applicant(s)/Patent Under Reexamination LENNOX et al.	
	Examiner CARSON GROSS	Art Unit 1746	Page 1 of 1

U.S. PATENT DOCUMENTS

*		Document Number Country Code-Number-Kind Code	Date MM-YYYY	Name	CPC Classification	US Classification
*	A	US-9822536-B2	11-2017	Lennox; Matthew	E04G21/28	1/1
*	B	US-11168484-B2	11-2021	Lennox; Matthew	E04G21/28	1/1
*	C	US-8407958-B2	04-2013	Kelly; Thomas L.	E04G21/00	52/409
*	D	US-7951873-B2	05-2011	Best; Steven Arthur	B32B27/32	526/348
*	E	US-20050217202-A1	10-2005	Crook, Michael L.	E04H9/14	52/782.1
*	F	US-6851229-B2	02-2005	Inzeo; Joe A.	E04D13/155	52/60
*	G	US-5935357-A	08-1999	Hubbard; Michael J.	E04D15/04	156/499
	H					
	I					
	J					
	K					
	L					
	M					

FOREIGN PATENT DOCUMENTS

*		Document Number Country Code-Number-Kind Code	Date MM-YYYY	Country	Name	CPC Classification
	N					
	O					
	P					
	Q					
	R					
	S					
	T					

NON-PATENT DOCUMENTS

*		Include as applicable: Author, Title Date, Publisher, Edition or Volume, Pertinent Pages)
	U	
	V	
	W	
	X	

*A copy of this reference is not being furnished with this Office action. (See MPEP § 707.05(a).)
Dates in MM-YYYY format are publication dates. Classifications may be US or foreign.

Search Notes	Application/Control No.	Applicant(s)/Patent Under Reexamination
	17/977,136	LENNOX et al.
	Examiner	**Art Unit**
	CARSON GROSS	1746

CPC - Searched*		
Symbol	**Date**	**Examiner**
B29C66/73715	01/24/2023	CAG
B29C66/1122	01/24/2023	CAG
E04G21/28	01/24/2023	CAG
E04G2021/248	01/24/2023	CAG
E04D5/06	01/24/2023	CAG

CPC Combination Sets - Searched*		
Symbol	**Date**	**Examiner**

US Classification - Searched*			
Class	**Subclass**	**Date**	**Examiner**

* See search history printout included with this form or the SEARCH NOTES box below to determine the scope of the search.

Search Notes		
Search Notes	**Date**	**Examiner**
Inventor Search	01/24/2023	CAG

Interference Search			
US Class/CPC Symbol	**US Subclass/CPC Group**	**Date**	**Examiner**

/CARSON GROSS/ Primary Examiner, Art Unit 1746	

Structural Wrap Exhibit 1012, Page 287
Structural Wrap v Stormseal, IPR2024-00084

PTO/SB/08a (01-09)
Approved for use through 02/28/2009. OMB 0651-0031
U.S. Patent and Trademark Office; U.S. DEPARTMENT OF COMMERCE
Under the Paperwork Reduction Act of 1995, no persons are required to respond to a collection of information unless it contains a valid OMB control number.

Substitute for form 1449/PTO

INFORMATION DISCLOSURE STATEMENT BY APPLICANT

(Use as many sheets as necessary)

Sheet 1 of 2

Complete if Known	
Application Number	TBD
Filing Date	October 31, 2022
First Named Inventor	Matthew LENNOX
Art Unit	TBD
Examiner Name	TBD
Attorney Docket Number	2021_01B

U. S. PATENT DOCUMENTS

Examiner Initials*	Cite No.[1]	Document Number Number-Kind Code[2] (if known)	Publication Date MM-DD-YYYY	Name of Patentee or Applicant of Cited Document	Pages, Columns, Lines, Where Relevant Passages or Relevant Figures Appear
		US- 6,425,213	07-30-2002	Lachapelle	
		US- 2008/0060302	03-13-2008	Bletsos et al.	
		US- 2005/0217202	10-06-2005	Crook	
		US- 2002/0095898	07-25-2002	Bettencourt	
		US- 6,206,991	03-27-2001	Starr	
		US- 4,061,519	12-06-1977	Hammer	
		US- 9,822,536	11-21-2017	Lennox et al.	
		US- 7,517,941	04-14-2009	Myhre et al.	
		US- 4,769,962	09-13-1988	Pohl et al.	
		US- 4,818,588	04-04-1989	Okabe et al.	
		US- 6,632,496	10-14-2003	Johnson et al.	
		US- 6,797,218	09-28-2004	Bickerstaff	
		US- 2008/0022620	01-31-2008	Crowley	
		US- 11,168,484	11-09-2021	Lennox et al.	
		US- 2007/0266643	11-22-2007	Cowvins	
		US-			
		US-			
		US-			
		US-			

FOREIGN PATENT DOCUMENTS

Examiner Initials*	Cite No.[1]	Foreign Patent Document Country Code[3]-Number[4]-Kind Code[5] (if known)	Publication Date MM-DD-YYYY	Name of Patentee or Applicant of Cited Document	Pages, Columns, Lines, Where Relevant Passages Or Relevant Figures Appear	T[6]
		AU 199466002	10-06-1994	Smith		
		AU 2008202416	09-18-2008	Farrow		
		GB 2388815	11-26-2003	Avril		
		GB 2376206	12-11-2002	Waight		
		EP 0410275	01-30-1991	Gottlieb		
		EP 0410275	01-30-1991	Gottlieb	English Abstract	

Examiner Signature	/CARSON GROSS/	Date Considered	01/20/2023

*EXAMINER: Initial if reference considered, whether or not citation is in conformance with MPEP 609. Draw line through citation if not in conformance and not considered. Include copy of this form with next communication to applicant. [1] Applicant's unique citation designation number (optional). [2] See Kinds Codes of USPTO Patent Documents at www.uspto.gov or MPEP 901.04. [3] Enter Office that issued the document, by the two-letter code (WIPO Standard ST.3). [4] For Japanese patent documents, the indication of the year of the reign of the Emperor must precede the serial number of the patent document. [5] Kind of document by the appropriate symbols as indicated on the document under WIPO Standard ST.16 if possible. [6] Applicant is to place a check mark here if English language Translation is attached.

This collection of information is required by 37 CFR 1.97 and 1.98. The information is required to obtain or retain a benefit by the public which is to file (and by the USPTO to process) an application. Confidentiality is governed by 35 U.S.C. 122 and 37 CFR 1.14. This collection is estimated to take 2 hours to complete, including gathering, preparing, and submitting the completed application form to the USPTO. Time will vary depending upon the individual case. Any comments on the amount of time you require to complete this form and/or suggestions for reducing this burden, should be sent to the Chief Information Officer, U.S. Patent and Trademark Office, P.O. Box 1450, Alexandria, VA 22313-1450. DO NOT SEND FEES OR COMPLETED FORMS TO THIS ADDRESS. **SEND TO: Commissioner for Patents, P.O. Box 1450, Alexandria, VA 22313-1450.**

If you need assistance in completing the form, call 1-800-PTO-9199 (1-800-786-9199) and select option 2.

ALL REFERENCES CONSIDERED EXCEPT WHERE LINED THROUGH. /C.G./

PTO/SB/08b (01-09)
Approved for use through 02/28/2009. OMB 0651-0031
U.S. Patent and Trademark Office; U.S. DEPARTMENT OF COMMERCE
Under the Paperwork Reduction Act of 1995, no persons are required to respond to a collection of information unless it contains a valid OMB control number.

Substitute for form 1449/PTO

INFORMATION DISCLOSURE STATEMENT BY APPLICANT

(Use as many sheets as necessary)

Sheet 2 of 2

	Complete if Known
Application Number	TBD
Filing Date	October 31, 2022
First Named Inventor	Matthew LENNOX
Art Unit	TBD
Examiner Name	TBD
Attorney Docket Number	2021_01B

NON PATENT LITERATURE DOCUMENTS

Examiner Initials*	Cite No.[1]	Include name of the author (in CAPITAL LETTERS), title of the article (when appropriate), title of the item (book, magazine, journal, serial, symposium, catalog, etc.), date, page(s), volume-issue number(s), publisher, city and/or country where published.	T[2]
		Written Opinion of the International Searching Authority, completed October 8, 2010 by the Australian Patent Office for International Application PCT/AU2010/001026.	
		International Search Report of the Internation Searching Authority, completed October 8, 2010 by the Australian Patent Office, for International Application PCT/AU2010/001026.	
		International Search Report of the International Searching Authority, completed July 20, 2009 by the Australian Patent Office, for International Application PCT/AU2009/000685.	

Examiner Signature	/CARSON GROSS/	Date Considered	01/20/2023

*EXAMINER: Initial if reference considered, whether or not citation is in conformance with MPEP 609. Draw line through citation if not in conformance and not considered. Include copy of this form with next communication to applicant.

1 Applicant's unique citation designation number (optional). 2 Applicant is to place a check mark here if English language Translation is attached.

This collection of information is required by 37 CFR 1.98. The information is required to obtain or retain a benefit by the public which is to file (and by the USPTO to process) an application. Confidentiality is governed by 35 U.S.C. 122 and 37 CFR 1.14. This collection is estimated to take 2 hours to complete, including gathering, preparing, and submitting the completed application form to the USPTO. Time will vary depending upon the individual case. Any comments on the amount of time you require to complete this form and/or suggestions for reducing this burden, should be sent to the Chief Information Officer, U.S. Patent and Trademark Office, P.O. Box 1450, Alexandria, VA 22313-1450. DO NOT SEND FEES OR COMPLETED FORMS TO THIS ADDRESS. **SEND TO: Commissioner for Patents, P.O. Box 1450, Alexandria, VA 22313-1450.**

If you need assistance in completing the form, call 1-800-PTO-9199 (1-800-786-9199) and select option 2.

ALL REFERENCES CONSIDERED EXCEPT WHERE LINED THROUGH. /C.G./

PTO/SB/08a (01-09)
Approved for use through 02/28/2009. OMB 0651-0031
U.S. Patent and Trademark Office; U.S. DEPARTMENT OF COMMERCE
Under the Paperwork Reduction Act of 1995, no persons are required to respond to a collection of information unless it contains a valid OMB control number.

Substitute for form 1449/PTO

INFORMATION DISCLOSURE STATEMENT BY APPLICANT

(Use as many sheets as necessary)

Sheet 1 of 1

Complete if Known	
Application Number	17/977,136
Filing Date	October 31, 2022
First Named Inventor	Matthew LENNOX
Art Unit	TBD
Examiner Name	TBD
Attorney Docket Number	2021_01B

U. S. PATENT DOCUMENTS

Examiner Initials*	Cite No.[1]	Document Number Number-Kind Code[2] (if known)	Publication Date MM-DD-YYYY	Name of Patentee or Applicant of Cited Document	Pages, Columns, Lines, Where Relevant Passages or Relevant Figures Appear
		US- 2007/0266643	11-22-2007	Cowvins	
		US-			
		US-			
		US-			
		US-			
		US-			
		US-			
		US-			
		US-			
		US-			
		US-			
		US-			
		US-			
		US-			
		US-			
		US-			
		US-			
		US-			

FOREIGN PATENT DOCUMENTS

Examiner Initials*	Cite No.[1]	Foreign Patent Document Country Code[3]-Number[4]-Kind Code[5] (if known)	Publication Date MM-DD-YYYY	Name of Patentee or Applicant of Cited Document	Pages, Columns, Lines, Where Relevant Passages Or Relevant Figures Appear	T[6]

Examiner Signature	/CARSON GROSS/	Date Considered	01/20/2023

*EXAMINER: Initial if reference considered, whether or not citation is in conformance with MPEP 609. Draw line through citation if not in conformance and not considered. Include copy of this form with next communication to applicant. [1] Applicant's unique citation designation number (optional). [2] See Kinds Codes of USPTO Patent Documents at www.uspto.gov or MPEP 901.04. [3] Enter Office that issued the document, by the two-letter code (WIPO Standard ST.3). [4] For Japanese patent documents, the indication of the year of the reign of the Emperor must precede the serial number of the patent document. [5] Kind of document by the appropriate symbols as indicated on the document under WIPO Standard ST.16 if possible. [6] Applicant is to place a check mark here if English language Translation is attached.

This collection of information is required by 37 CFR 1.97 and 1.98. The information is required to obtain or retain a benefit by the public which is to file (and by the USPTO to process) an application. Confidentiality is governed by 35 U.S.C. 122 and 37 CFR 1.14. This collection is estimated to take 2 hours to complete, including gathering, preparing, and submitting the completed application form to the USPTO. Time will vary depending upon the individual case. Any comments on the amount of time you require to complete this form and/or suggestions for reducing this burden, should be sent to the Chief Information Officer, U.S. Patent and Trademark Office, P.O. Box 1450, Alexandria, VA 22313-1450. DO NOT SEND FEES OR COMPLETED FORMS TO THIS ADDRESS. **SEND TO: Commissioner for Patents, P.O. Box 1450, Alexandria, VA 22313-1450.**

If you need assistance in completing the form, call 1-800-PTO-9199 (1-800-786-9199) and select option 2.

ALL REFERENCES CONSIDERED EXCEPT WHERE LINED THROUGH. /C.G./

PE2E SEARCH - Search History (Prior Art)

Ref #	Hits	Search Query	DBs	Default Operator	Plurals	British Equivalents	Time Stamp
L1	3	("9822536" "11168484" "11555318").pn.	(US-PGPUB; USPAT)	OR	OFF	ON	2023/01/24 11:42 AM
L2	18	("20070266643" OR "4763783" OR "7951873" OR "8247065" OR "11168484" OR "20020095898" OR "20050217202" OR "20080022620" OR "20080060302" OR "4061519" OR "4769962" OR "4818588" OR "6206991" OR "6425213" OR "6632496" OR "6797218" OR "7517941" OR "9822536").pn.	(US-PGPUB; USPAT)	ADJ	ON	ON	2023/01/24 11:47 AM
L3	18	((US-10858834-B2 OR US-9822536-B2 OR US-11168484-B2 OR US-6425213-B1 OR US-4061519-A OR US-8407958-B2 OR US-7951873-B2 OR US-7517941-B2 OR US-5935357-A OR US-5927023-A OR US-4897293-A OR US-6851229-B2).did. AND USPT.dbnm.) OR ((US-20050217202-A1 OR US-20020095898-A1 OR US-20080022620-A1 OR US-20070266643-A1 OR US-20080060302-A1 OR US-20030051416-A1).did. AND PGPB.dbnm.)	(US-PGPUB; USPAT; USOCR; FIT (AU, AP, AT, BE, BG, BR, BY, CA, CH, CN, CS, CU, CZ, DD, DE, DK, EA, EE, EP, ES, FI, FR, GB, HR, HU, ID, IE, IL, IS, IT, JP, KR, LT, LU, LV, MA, OA, RU, SU, WO, MC, MD, MY, NL, NO, NZ, PH, PL, PT, RO, RS, SE, SG, SI, SK, TH, TN, TR, TW, UA, VN); FPRS; EPO; JPO; DERWENT; IBM_TDB)	ADJ	ON	ON	2023/01/24 11:50 AM
L4	4873	B29C66/73715.cpc.	(US-PGPUB; USPAT; USOCR; FIT (AU, AP, AT, BE, BG, BR, BY, CA, CH, CN, CS, CU, CZ, DD, DE, DK, EA, EE, EP, ES, FI, FR, GB, HR, HU, ID, IE, IL, IS, IT, JP, KR, LT, LU, LV, MA, OA, RU, SU, WO, MC, MD, MY, NL, NO,	ADJ	ON	ON	2023/01/24 12:25 PM

			NZ, PH, PL, PT, RO, RS, SE, SG, SI, SK, TH, TN, TR, TW, UA, VN); FPRS; EPO; JPO; DERWENT; IBM_TDB)				
L5	140947	B29C66/1122.cpc.	(US-PGPUB; USPAT; USOCR; FIT (AU, AP, AT, BE, BG, BR, BY, CA, CH, CN, CS, CU, CZ, DD, DE, DK, EA, EE, EP, ES, FI, FR, GB, HR, HU, ID, IE, IL, IS, IT, JP, KR, LT, LU, LV, MA, OA, RU, SU, WO, MC, MD, MY, NL, NO, NZ, PH, PL, PT, RO, RS, SE, SG, SI, SK, TH, TN, TR, TW, UA, VN); FPRS; EPO; JPO; DERWENT; IBM_TDB)	ADJ	ON	ON	2023/01/24 12:26 PM
L6	21	L4 AND (roof$4 near10(protect$4 OR cover$4 OR defend$4 OR secur$5))	(US-PGPUB; USPAT; USOCR; FIT (AU, AP, AT, BE, BG, BR, BY, CA, CH, CN, CS, CU, CZ, DD, DE, DK, EA, EE, EP, ES, FI, FR, GB, HR, HU, ID, IE, IL, IS, IT, JP, KR, LT, LU, LV, MA, OA, RU, SU, WO, MC, MD, MY, NL, NO, NZ, PH, PL, PT, RO, RS, SE, SG, SI, SK, TH, TN, TR, TW, UA, VN); FPRS; EPO; JPO; DERWENT; IBM_TDB)	ADJ	ON	ON	2023/01/24 12:27 PM
L7	33	L5 AND (heat$4 near3 (shrink$4 OR shrunk)) AND (roof$4 near10(protect$4 OR cover$4 OR defend$4 OR secur$5))	(US-PGPUB; USPAT; USOCR; FIT (AU, AP, AT, BE, BG, BR, BY, CA, CH, CN, CS, CU, CZ, DD, DE, DK, EA, EE, EP, ES, FI, FR, GB, HR, HU, ID, IE, IL, IS, IT, JP, KR, LT, LU, LV, MA, OA, RU, SU, WO, MC, MD, MY, NL, NO, NZ, PH, PL, PT, RO, RS, SE, SG, SI, SK, TH, TN, TR, TW, UA, VN); FPRS; EPO; JPO; DERWENT; IBM_TDB)	ADJ	ON	ON	2023/01/24 12:27 PM
L8	38	(L4 AND L5) AND ROOF$4	(US-PGPUB; USPAT; USOCR; FIT (AU, AP, AT, BE, BG, BR, BY,	ADJ	ON	ON	2023/01/24 12:28 PM

			CA, CH, CN, CS, CU, CZ, DD, DE, DK, EA, EE, EP, ES, FI, FR, GB, HR, HU, ID, IE, IL, IS, IT, JP, KR, LT, LU, LV, MA, OA, RU, SU, WO, MC, MD, MY, NL, NO, NZ, PH, PL, PT, RO, RS, SE, SG, SI, SK, TH, TN, TR, TW, UA, VN); FPRS; EPO; JPO; DERWENT; IBM_TDB)				
L9	2554	E04G21/28.cpc.	(US-PGPUB; USPAT; USOCR; FIT (AU, AP, AT, BE, BG, BR, BY, CA, CH, CN, CS, CU, CZ, DD, DE, DK, EA, EE, EP, ES, FI, FR, GB, HR, HU, ID, IE, IL, IS, IT, JP, KR, LT, LU, LV, MA, OA, RU, SU, WO, MC, MD, MY, NL, NO, NZ, PH, PL, PT, RO, RS, SE, SG, SI, SK, TH, TN, TR, TW, UA, VN); FPRS; EPO; JPO; DERWENT; IBM_TDB)	ADJ	ON	ON	2023/01/24 12:28 PM
L10	979	E04G2021/248.cpc.	(US-PGPUB; USPAT; USOCR; FIT (AU, AP, AT, BE, BG, BR, BY, CA, CH, CN, CS, CU, CZ, DD, DE, DK, EA, EE, EP, ES, FI, FR, GB, HR, HU, ID, IE, IL, IS, IT, JP, KR, LT, LU, LV, MA, OA, RU, SU, WO, MC, MD, MY, NL, NO, NZ, PH, PL, PT, RO, RS, SE, SG, SI, SK, TH, TN, TR, TW, UA, VN); FPRS; EPO; JPO; DERWENT; IBM_TDB)	ADJ	ON	ON	2023/01/24 12:28 PM
L11	2323	E04D5/06.cpc.	(US-PGPUB; USPAT; USOCR; FIT (AU, AP, AT, BE, BG, BR, BY, CA, CH, CN, CS, CU, CZ, DD, DE, DK, EA, EE, EP, ES, FI, FR, GB, HR, HU, ID, IE, IL, IS, IT, JP, KR, LT, LU, LV, MA, OA, RU, SU, WO, MC, MD, MY, NL, NO, NZ, PH, PL, PT, RO, RS, SE, SG, SI, SK,	ADJ	ON	ON	2023/01/24 12:28 PM

			TH, TN, TR, TW, UA, VN); FPRS; EPO; JPO; DERWENT; IBM_TDB)				
L12	50	(L9 OR L10 OR L11) AND (heat$4 near3 (shrink$4 OR shrunk)) AND (roof$4 near10(protect$4 OR cover$4 OR defend$4 OR secur$5))	(US-PGPUB; USPAT; USOCR; FIT (AU, AP, AT, BE, BG, BR, BY, CA, CH, CN, CS, CU, CZ, DD, DE, DK, EA, EE, EP, ES, FI, FR, GB, HR, HU, ID, IE, IL, IS, IT, JP, KR, LT, LU, LV, MA, OA, RU, SU, WO, MC, MD, MY, NL, NO, NZ, PH, PL, PT, RO, RS, SE, SG, SI, SK, TH, TN, TR, TW, UA, VN); FPRS; EPO; JPO; DERWENT; IBM_TDB)	ADJ	ON	ON	2023/01/24 12:30 PM
L13	1	("11041312").pn.	(USPAT)	ADJ	ON	ON	2023/01/24 12:32 PM

PE2E SEARCH - Search History (Interference)

There are no Interference searches to show.

Bibliographic Data

Application No: 17/977,136

Foreign Priority claimed: ◉ Yes ○ No

35 USC 119 (a-d) conditions met: ☑ Yes ☐ No ☐ Met After Allowance

Verified and Acknowledged: /CARSON GROSS/ (Examiner's Signature) | Initials

Title: ROOF AND WALL COVER SYSTEM

FILING or 371(c) DATE	CLASS	GROUP ART UNIT	ATTORNEY DOCKET NO.
10/31/2022	156	1746	
RULE			

APPLICANTS

System Stormseal Pty Ltd,

INVENTORS

Matthew LENNOX, Cronulla, AUSTRALIA

Rodney BURGE, Miranda, AUSTRALIA

Adam FARROW, Miranda, AUSTRALIA

CONTINUING DATA

This application is a CON of 17519787 11/05/2021

17519787 is a CIP of 15783813 10/13/2017 PAT 11168484

15783813 is a CON of 12995966 05/31/2011 PAT 9822536

12995966 is a 371 of PCT/AU2009/000685 06/09/2009

FOREIGN APPLICATIONS

AUSTRALIA AU2008202416 06/02/2008

AUSTRALIA AU2008203409 07/30/2008

AUSTRALIA AU2008101060 10/30/2008

AUSTRALIA AU2009200232 01/22/2009

IF REQUIRED, FOREIGN LICENSE GRANTED**

11/30/2022

**** SMALL ENTITY ****

STATE OR COUNTRY

AUSTRALIA

ADDRESS

FILING FEE RECEIVED

$3,000

PTO/SB/08a (01-09)
Approved for use through 02/28/2009. OMB 0651-0031
U.S. Patent and Trademark Office; U.S. DEPARTMENT OF COMMERCE
Under the Paperwork Reduction Act of 1995, no persons are required to respond to a collection of information unless it contains a valid OMB control number.

Substitute for form 1449/PTO

INFORMATION DISCLOSURE STATEMENT BY APPLICANT

(Use as many sheets as necessary)

Sheet 1 of 2

Complete if Known	
Application Number	17/977,136
Filing Date	October 31, 2022
First Named Inventor	Matthew LENNOX
Art Unit	TBD
Examiner Name	TBD
Attorney Docket Number	2021_01B

U. S. PATENT DOCUMENTS

Examiner Initials*	Cite No.[1]	Document Number Number-Kind Code[2] (if known)	Publication Date MM-DD-YYYY	Name of Patentee or Applicant of Cited Document	Pages, Columns, Lines, Where Relevant Passages or Relevant Figures Appear
		US- 4,763,783	08-16-1988	Talbot	
		US- 7,951,873	05-31-2011	Best et al.	
		US- 8,247,065	08-21-2012	Best et al.	
		US-			
		US-			
		US-			
		US-			
		US-			
		US-			
		US-			
		US-			
		US-			
		US-			
		US-			
		US-			
		US-			
		US-			
		US-			
		US-			

FOREIGN PATENT DOCUMENTS

Examiner Initials*	Cite No.[1]	Foreign Patent Document Country Code[3]-Number[4]-Kind Code[5] (if known)	Publication Date MM-DD-YYYY	Name of Patentee or Applicant of Cited Document	Pages, Columns, Lines, Where Relevant Passages Or Relevant Figures Appear	T[6]

Examiner Signature	/CARSON GROSS/	Date Considered	01/20/2023

*EXAMINER: Initial if reference considered, whether or not citation is in conformance with MPEP 609. Draw line through citation if not in conformance and not considered. Include copy of this form with next communication to applicant. [1] Applicant's unique citation designation number (optional). [2] See Kinds Codes of USPTO Patent Documents at www.uspto.gov or MPEP 901.04. [3] Enter Office that issued the document, by the two-letter code (WIPO Standard ST.3). [4] For Japanese patent documents, the indication of the year of the reign of the Emperor must precede the serial number of the patent document. [5] Kind of document by the appropriate symbols as indicated on the document under WIPO Standard ST.16 if possible. [6] Applicant is to place a check mark here if English language Translation is attached.

This collection of information is required by 37 CFR 1.97 and 1.98. The information is required to obtain or retain a benefit by the public which is to file (and by the USPTO to process) an application. Confidentiality is governed by 35 U.S.C. 122 and 37 CFR 1.14. This collection is estimated to take 2 hours to complete, including gathering, preparing, and submitting the completed application form to the USPTO. Time will vary depending upon the individual case. Any comments on the amount of time you require to complete this form and/or suggestions for reducing this burden, should be sent to the Chief Information Officer, U.S. Patent and Trademark Office, P.O. Box 1450, Alexandria, VA 22313-1450. DO NOT SEND FEES OR COMPLETED FORMS TO THIS ADDRESS. **SEND TO: Commissioner for Patents, P.O. Box 1450, Alexandria, VA 22313-1450.**

If you need assistance in completing the form, call 1-800-PTO-9199 (1-800-786-9199) and select option 2.

ALL REFERENCES CONSIDERED EXCEPT WHERE LINED THROUGH. /C.G./

PTO/SB/08b (01-09)
Approved for use through 02/28/2009. OMB 0651-0031
U.S. Patent and Trademark Office; U.S. DEPARTMENT OF COMMERCE
Under the Paperwork Reduction Act of 1995, no persons are required to respond to a collection of information unless it contains a valid OMB control number.

Substitute for form 1449/PTO

INFORMATION DISCLOSURE STATEMENT BY APPLICANT

(Use as many sheets as necessary)

Sheet 2 of 2

	Complete if Known
Application Number	17/977,136
Filing Date	October 31, 2022
First Named Inventor	Matthew LENNOX
Art Unit	TBD
Examiner Name	TBD
Attorney Docket Number	2021_01B

NON PATENT LITERATURE DOCUMENTS

Examiner Initials*	Cite No.[1]	Include name of the author (in CAPITAL LETTERS), title of the article (when appropriate), title of the item (book, magazine, journal, serial, symposium, catalog, etc.), date, page(s), volume-issue number(s), publisher, city and/or country where published.	T[2]
		Notice of Re-Examination, dated August 4, 2021, Australian Patent Office for Australian Patent No. 2019101672, pages 1-25.	
		Notice of Re-Examination, dated May 23, 2022, Australian Patent Office for Australian Patent No. 2020103984, pages 1-13.	
		Notice of Re-Examination (Requested by 3rd party), dated February 3, 2022, Australian Patent Office for Australian Patent No. 2020103984, pages 1-26.	
		Re-Examination Report, dated March 28,2022, Australian Patent Office for Australian Patent No. 2020103984, pages 1-4.	
		Re-Examination Report, dated July 1,2022, Australian Patent Office for Australian Patent No. 2020103984, pages 1-6.	
		https://www.youtube.com/watch?v=fKTIAqd8VT4, dated June 3, 2008.	
		https://www.youtube.com/watch?v=dLM7QolyiKM, dated July 15, 2010.	
		https://www.youtube.com/watch?v=anAQKjUIsuA&t=106s, dated January 28, 2015.	

Examiner Signature	/CARSON GROSS/	Date Considered	01/20/2023

*EXAMINER: Initial if reference considered, whether or not citation is in conformance with MPEP 609. Draw line through citation if not in conformance and not considered. Include copy of this form with next communication to applicant.

1 Applicant's unique citation designation number (optional). 2 Applicant is to place a check mark here if English language Translation is attached.

This collection of information is required by 37 CFR 1.98. The information is required to obtain or retain a benefit by the public which is to file (and by the USPTO to process) an application. Confidentiality is governed by 35 U.S.C. 122 and 37 CFR 1.14. This collection is estimated to take 2 hours to complete, including gathering, preparing, and submitting the completed application form to the USPTO. Time will vary depending upon the individual case. Any comments on the amount of time you require to complete this form and/or suggestions for reducing this burden, should be sent to the Chief Information Officer, U.S. Patent and Trademark Office, P.O. Box 1450, Alexandria, VA 22313-1450. DO NOT SEND FEES OR COMPLETED FORMS TO THIS ADDRESS. **SEND TO: Commissioner for Patents, P.O. Box 1450, Alexandria, VA 22313-1450.**

If you need assistance in completing the form, call 1-800-PTO-9199 (1-800-786-9199) and select option 2.

ALL REFERENCES CONSIDERED EXCEPT WHERE LINED THROUGH. /C.G./

UNITED STATES PATENT AND TRADEMARK OFFICE

UNITED STATES DEPARTMENT OF COMMERCE
United States Patent and Trademark Office
Address: COMMISSIONER FOR PATENTS
P.O. Box 1450
Alexandria, Virginia 22313-1450
www.uspto.gov

APPLICATION NO.	FILING DATE	FIRST NAMED INVENTOR	ATTORNEY DOCKET NO.	CONFIRMATION NO.
17/977,136	10/31/2022	Matthew LENNOX	2021_01B	7315

130554 7590 02/28/2023
Kevin McDermott
312 South Payne Street
Alexandria, VA 22314

EXAMINER
GROSS, CARSON

ART UNIT	PAPER NUMBER
1746	

MAIL DATE	DELIVERY MODE
02/28/2023	PAPER

Please find below and/or attached an Office communication concerning this application or proceeding.

The time period for reply, if any, is set in the attached communication.

PTOL-90A (Rev. 04/07)

Applicant-Initiated Interview Summary	**Application No.** 17/977,136	**Applicant(s)** LENNOX et al.		
	Examiner CARSON GROSS	**Art Unit** 1746	**AIA (First Inventor to File) Status** No	**Page** 1 of 1

All Participants (applicant, applicants representative, PTO personnel)	**Title**	**Type**
CARSON GROSS	Primary Examiner	Telephonic
KEVIN MCDERMOTT	Attorney of Record	

Date of Interview: 24 February 2023

Issues Discussed:

35 U.S.C. 102

102 rejection over the Crook reference and 103 rejection including Crook, Inzeo, and Kelly were discussed. No agreement was reached.

☑ Attachment

/CARSON GROSS/ Primary Examiner, Art Unit 1746	

Applicant is reminded that a complete written statement as to the substance of the interview must be made of record in the application file. It is the applicants responsibility to provide the written statement, unless the interview was initiated by the Examiner and the Examiner has indicated that a written summary will be provided. See MPEP 713.04
Please further see:
MPEP 713.04
Title 37 Code of Federal Regulations (CFR) § 1.133 Interviews, paragraph (b)
37 CFR § 1.2 Business to be transacted in writing

Applicant recordation instructions: The formal written reply to the last Office action must include the substance of the interview. (See MPEP section 713.04). If a reply to the last Office action has already been filed, applicant is given a non-extendable period of the longer of one month or thirty days from this interview date, or the mailing date of this interview summary form, whichever is later, to file a statement of the substance of the interview.

Examiner recordation instructions: Examiners must summarize the substance of any interview of record. A complete and proper recordation of the substance of an interview should include the items listed in MPEP 713.04 for complete and proper recordation including the identification of the general thrust of each argument or issue discussed, a general indication of any other pertinent matters discussed regarding patentability and the general results or outcome of the interview, to include an indication as to whether or not agreement was reached on the issues raised.

Gross, Carson A.

From: Kevin McDermott <kmcdermott@mcdermlaw.com>
Sent: Friday, February 24, 2023 8:08 AM
To: Gross, Carson A.
Subject: FW: Application No. 17/977,136 Agenda for Interview

CAUTION: This email has originated from a source outside of USPTO. **PLEASE CONSIDER THE SOURCE** before responding, clicking on links, or opening attachments.

Dear Examiner Gross,
Further to my earlier email, I would like to note that on page 4 of the office action it states that "Crook and Kelly teach fastening to a wall and do not expressly disclose attachment to a fascia or eaves". It is difficult to reconcile this with the 102 rejection of claims 23 and 29.
Take care,
Kevin

The Law Office of
KEVIN MCDERMOTT PLLC

1225 Roundhouse Lane, Alexandria, VA 22314
Tel 703-380-1795 Fax 703-988-2412
kmcdermott@mcdermlaw.com www.mcdermlaw.com

This email and any attachments are private and confidential, may be legally privileged, and are intended solely for the use of the recipient or entity to which they are addressed. If you have received this email in error, please delete same and notify me immediately (mail@mcdermlaw.com).

From: Kevin McDermott
Sent: Friday, February 24, 2023 8:00 AM
To: carson.gross@uspto.gov
Subject: Application No. 17/977,136 Agenda for Interview

Dear Examiner Gross,
For the Interview this morning, I would like to discuss how Crook describes "mechanically attaching the leading and trailing edges to the first and second edges, respectively" as recited in claims 23 and 29. On page 4 of the Office Action, it appears that paragraph [0029] was cited as teaching this feature. However, paragraph [0029], lines 5-7 teach against or perhaps away from using fasteners.
Thanks,
Kevin

The Law Office of
KEVIN MCDERMOTT PLLC

1225 Roundhouse Lane, Alexandria, VA 22314
Tel 703-380-1795 Fax 703-988-2412
kmcdermott@mcdermlaw.com www.mcdermlaw.com

This email and any attachments are private and confidential, may be legally privileged, and are intended solely for the use of the recipient or entity to which they are addressed. If you have received this email in error, please delete same and notify me immediately (mail@mcdermlaw.com).

UNITED STATES PATENT AND TRADEMARK OFFICE

UNITED STATES DEPARTMENT OF COMMERCE
United States Patent and Trademark Office
Address: COMMISSIONER FOR PATENTS
P.O. Box 1450
Alexandria, Virginia 22313-1450
www.uspto.gov

APPLICATION NUMBER	FILING OR 371(C) DATE	FIRST NAMED APPLICANT	ATTY. DOCKET NO./TITLE
17/977,136	10/31/2022	Matthew LENNOX	2021_01B

CONFIRMATION NO. 7315

PUBLICATION NOTICE

OC000000137585432

130554
Kevin McDermott
312 South Payne Street
Alexandria, VA 22314

Title:ROOF AND WALL COVER SYSTEM

Publication No.US-2023-0079708-A1
Publication Date:03/16/2023

NOTICE OF PUBLICATION OF APPLICATION

The above-identified application will be electronically published as a patent application publication pursuant to 37 CFR 1.211, et seq. The patent application publication number and publication date are set forth above.

The publication may be accessed through the USPTO's publically available Searchable Databases via the Internet at www.uspto.gov. The direct link to access the publication is currently http://www.uspto.gov/patft/.

The publication process established by the Office does not provide for mailing a copy of the publication to applicant. A copy of the publication may be obtained from the Office upon payment of the appropriate fee set forth in 37 CFR 1.19(a)(1). Orders for copies of patent application publications are handled by the USPTO's Public Records Division. The Public Records Division can be reached by telephone at (571) 272-3150 or (800) 972-6382, by facsimile at (571) 273-3250, by mail addressed to the United States Patent and Trademark Office, Public Records Division, Alexandria, VA 22313-1450 or via the Internet.

In addition, information on the status of the application, including the mailing date of Office actions and the dates of receipt of correspondence filed in the Office, may also be accessed via the Internet through the Patent Electronic Business Center at www.uspto.gov using the public side of the Patent Application Information and Retrieval (PAIR) system. The direct link to access this status information is currently https://portal.uspto.gov/pair/PublicPair. Prior to publication, such status information is confidential and may only be obtained by applicant using the private side of PAIR.

Further assistance in electronically accessing the publication, or about PAIR, is available by calling the Patent Electronic Business Center at 1-866-217-9197.

Office of Data Managment, Application Assistance Unit (571) 272-4000, or (571) 272-4200, or 1-888-786-0101

UNITED STATES PATENT AND TRADEMARK OFFICE

UNITED STATES DEPARTMENT OF COMMERCE
United States Patent and Trademark Office
Address: COMMISSIONER FOR PATENTS
P.O. Box 1450
Alexandria, Virginia 22313-1450
www.uspto.gov

APPLICATION NO.	FILING DATE	FIRST NAMED INVENTOR	ATTORNEY DOCKET NO.	CONFIRMATION NO.
17/977,136	10/31/2022	Matthew LENNOX	2021_01B	7315

130554 7590 07/27/2023
Kevin McDermott
312 South Payne Street
Alexandria, VA 22314

EXAMINER
GROSS, CARSON

ART UNIT	PAPER NUMBER
1746	

MAIL DATE	DELIVERY MODE
07/27/2023	PAPER

Please find below and/or attached an Office communication concerning this application or proceeding.

The time period for reply, if any, is set in the attached communication.

PTOL-90A (Rev. 04/07)

Notice of Abandonment	Application No.	Applicant(s)
	17/977,136	LENNOX et al.
	Examiner	**Art Unit**
	CARSON GROSS	1746

-- The MAILING DATE of this communication appears on the cover sheet with the correspondence address--

This application is abandoned in view of:

1. ☑ Applicant's failure to timely file a proper reply to the Office letter mailed on 25 January 2023.
   (a) ☐ A reply was received on _____ (with a Certificate of Mailing or Transmission dated _____), which is after the expiration of the period for reply (including a total extension of time of _____ month(s)) which expired on _____.
   (b) ☐ A proposed reply was received on _____, but it does not constitute a proper reply under 37 CFR 1.113 to the final rejection. (A proper reply under 37 CFR 1.113 to a final rejection consists only of:(1) a timely filed amendment which places the application in condition for allowance; (2) a timely filed Notice of Appeal (with appeal fee); or (3) if this is utility or plant application, a timely filed Request for Continued Examination (RCE) in compliance with 37 CFR 1.114. Note that RCEs are not permitted in design applications.)
   (c) ☐ A reply was received on _____ but it does not constitute a proper reply, or a *bona fide* attempt at a proper reply, to the non-final rejection. See 37 CFR 1.85(a) and 1.111. (See explanation in box 8 below).
   (d) ☑ No reply has been received.

2. ☐ Applicant's failure to timely pay the required issue fee and publication fee, if applicable, within the statutory period of three months from the mailing date of the Notice of Allowance (PTOL-85).
   (a) ☐ The issue fee and publication fee, if applicable, was received on _____ (with a Certificate of Mailing or Transmission dated _____), which is after the expiration of the statutory period for payment of the issue fee (and publication fee) set in the Notice of Allowance (PTOL-85).
   (b) ☐ The submitted fee of $ _____ is insufficient. A balance of $ _____ is due.
   The issue fee required by 37CFR 1.18 is $ _____ . The publication fee, if required by 37 CFR 1.18(d), is $ _____ .
   (c) ☐ The issue fee and publication fee, if applicable, has not been received.

3. ☐ Applicant's failure to timely file corrected drawings as required by, and within the three-month period set in, the Notice of Allowability (PTO-37).
   (a) ☐ Proposed corrected drawings were received on _____ (with a Certificate of Mailing or Transmission dated _____), which is after the expiration of the period for reply.
   (b) ☐ No corrected drawings have been received.

4. ☐ The letter of express abandonment which is signed by the attorney or agent of record or other party authorized under 37 CFR 1.33 (b). See 37 CFR 1.138(b).

5. ☐ The letter of express abandonment which is signed by an attorney or agent (acting in a representative capacity under 37 CFR 1.34) upon the filing of a continuing application.

6. ☐ The decision by the Patent Trial and Appeal Board rendered on _____ and because the period for seeking court review of the decision has expired and there are no allowed claims.

7. ☐ The dismissal of the appeal in an application having no allowed claims. (When an appeal is dismissed in an application having no allowed claims the application stands abandoned. See MPEP 1215.04 subsections I-V for an explanation of the reasons why an appeal is dismissed.)

8. ☐ The reason(s) below:

_____

/CARSON GROSS/
Primary Examiner, Art Unit 1746

Petitions to revive under 37 CFR 1.137, or requests to withdraw the holding of abandonment under 37 CFR 1.181, should be promptly filed to minimize any negative effects on patent term.