US006239765B1

(12) **United States Patent**
Johnson et al.

(10) **Patent No.: US 6,239,765 B1**
(45) **Date of Patent: May 29, 2001**

(54) **ASYMMETRIC DIPOLE ANTENNA ASSEMBLY**

(75) Inventors: **Greg F. Johnson**, Aptos; **Robert Hill**, Salinas, both of CA (US); **Don Keilen**, Sparks, NV (US)

(73) Assignee: **RangeStar Wireless, Inc.**, Aptos, CA (US)

(*) Notice: Subject to any disclaimer, the term of this patent is extended or adjusted under 35 U.S.C. 154(b) by 0 days.

(21) Appl. No.: **09/382,179**

(22) Filed: **Aug. 24, 1999**

Related U.S. Application Data

(60) Provisional application No. 60/121,989, filed on Feb. 27, 1999.

(51) **Int. Cl.**[7] **H01Q 1/38**
(52) **U.S. Cl.** **343/795**; 343/793; 343/702
(58) **Field of Search** ..... 343/795, 793, 343/700 MS, 702, 806

(56) **References Cited**

U.S. PATENT DOCUMENTS

4,686,536 * 8/1987 Allock ..... 343/700 MS
5,539,414 * 7/1996 Keen ..... 343/700 MS
5,764,197 * 6/1998 Tsuru et al. 343/895
5,767,811 * 6/1998 Mandai et al. 343/702
5,798,737 * 8/1998 Kanaba et al. 343/895
5,918,189 * 6/1999 Kivela 455/575
6,107,967 * 8/2000 Hill 343/702
B1 6,181,283 * 1/2001 Johnson et al. 343/702

* cited by examiner

Primary Examiner—Hoanganh Le
Assistant Examiner—Ephrem Alemu
(74) *Attorney, Agent, or Firm*—Larkin, Hoffman, Daly & Lindgren, Ltd.

(57) **ABSTRACT**

An asymmetric dipole antenna assembly is provided for wireless communications devices, and includes separate upper and lower conductor traces and a low impedance feedpoint at the junction of the conductor traces. The upper conductor trace may include a matching network and may be printed on a planar printed circuit board mounted proximate the top of the a hand-held wireless transceiver. The upper conducting trace provides ¼ wave resonance over a desired frequency range and a 50 ohm input impedance for the antenna. The lower conductor trace may be provided by the ground trace of the wireless device circuitry, requiring only a minimum effective trace length of ¼ wavelength at the lowest frequency of operation. Polarization of the antenna is determined by the orientation of the longest dimension of the lower conductor.

34 Claims, 6 Drawing Sheets

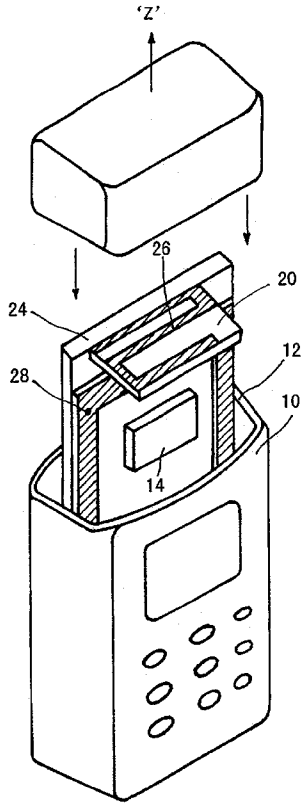

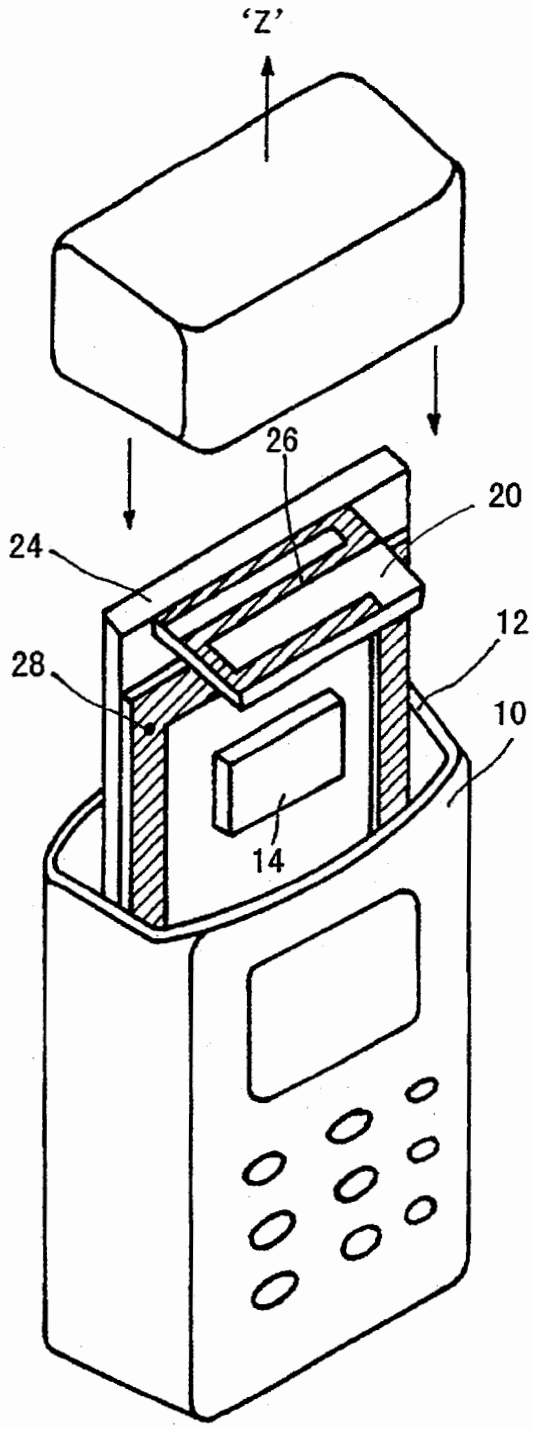

FIG. 1

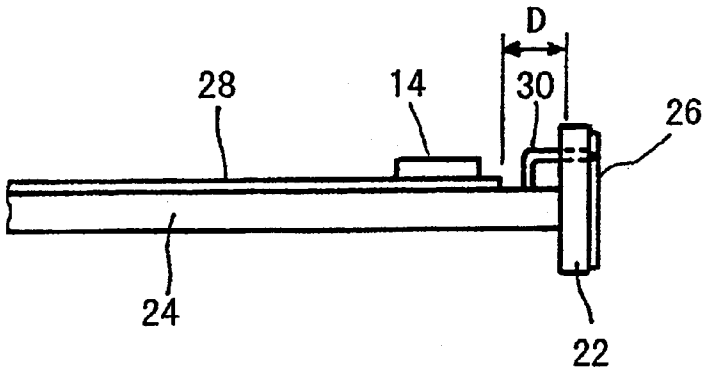

FIG. 2

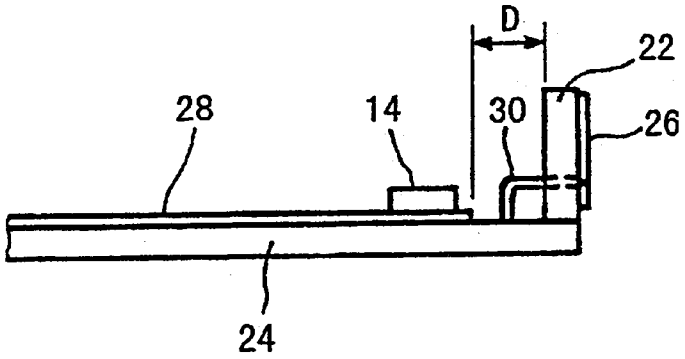

FIG. 3

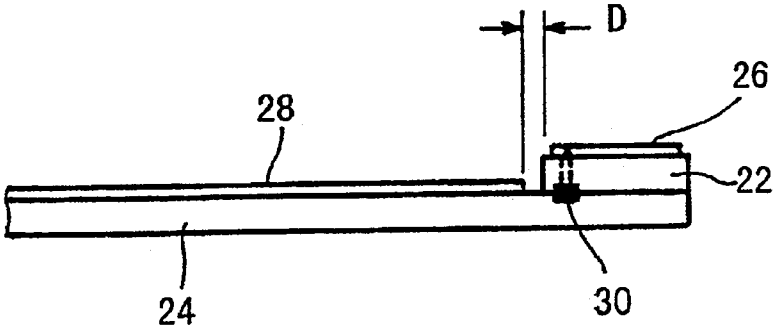

FIG. 4

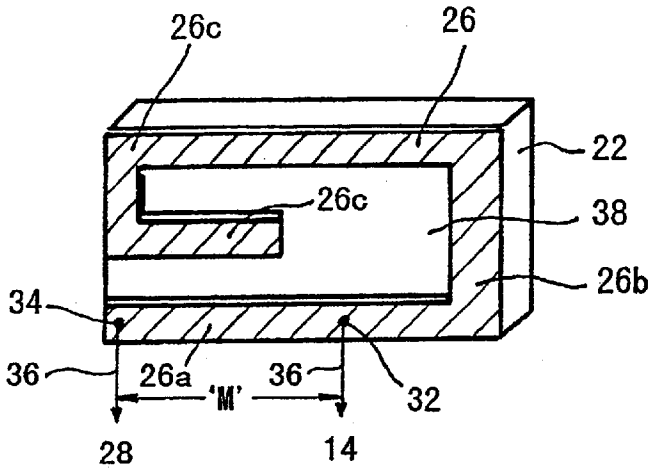

FIG. 5

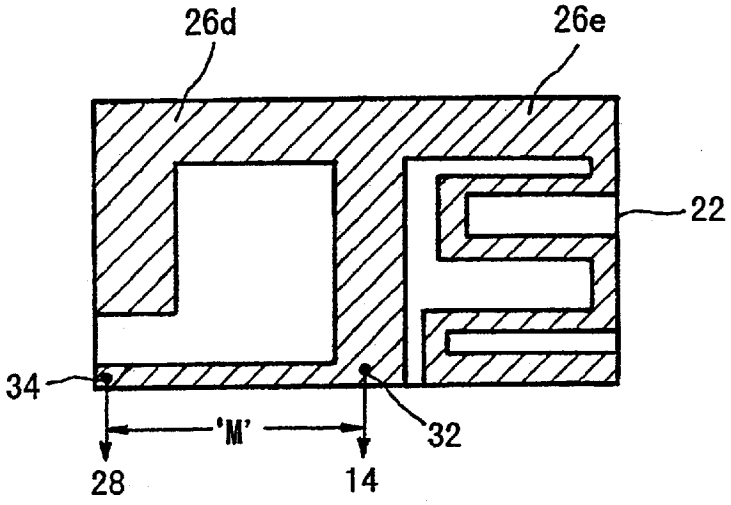

FIG. 6

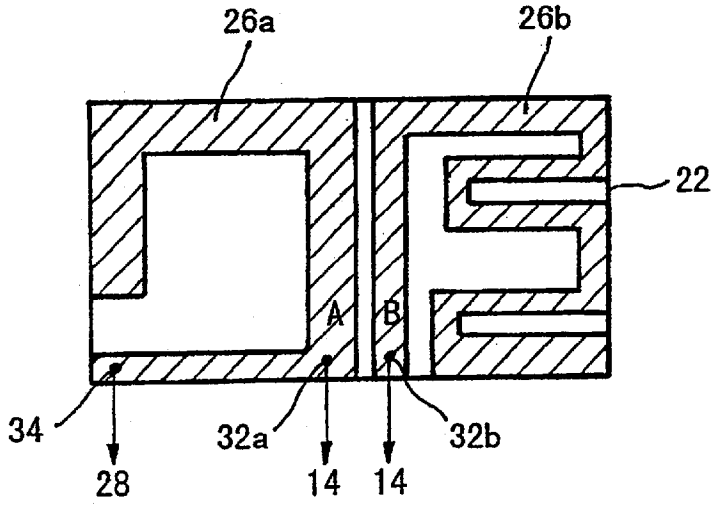

FIG. 7

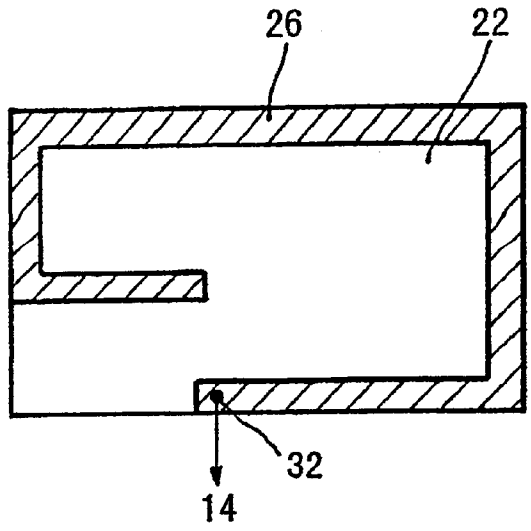

FIG. 8

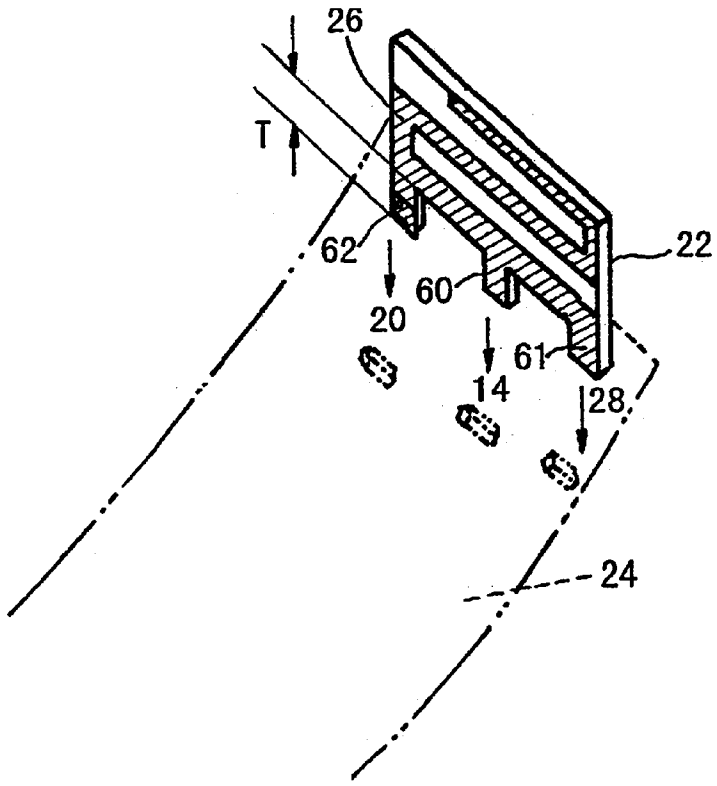

FIG. 12

FIG. 9

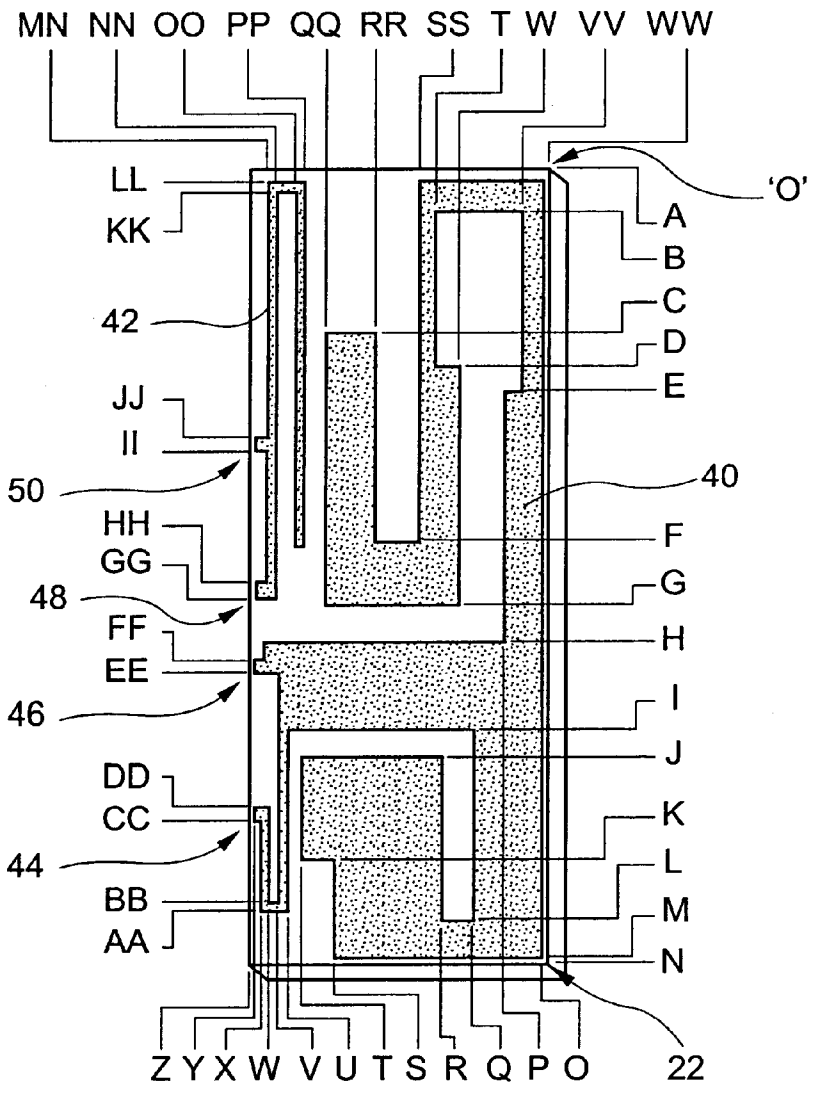
MN NN OO PP QQ RR SS T W VV WW
'O'
LL
KK
42
JJ
II
50
HH
GG
48
FF
EE
46
DD
CC
44
BB
AA
A
B
C
D
E
40
F
G
H
I
J
K
L
M
N
Z Y X W V U T S R Q P O
22

FIG. 10

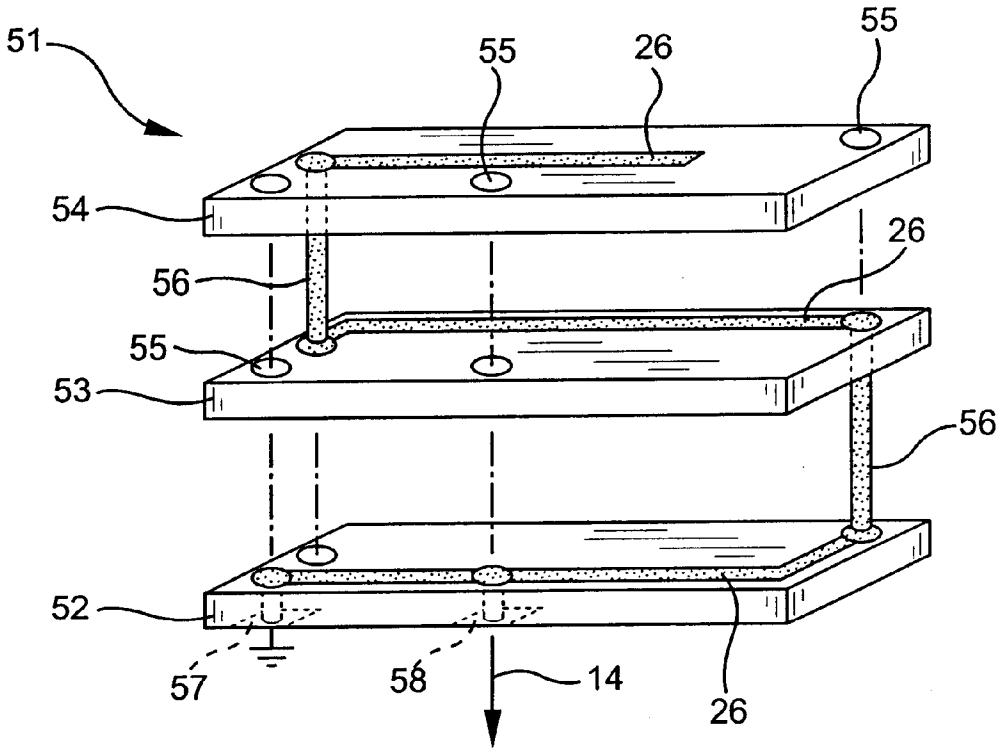

FIG. 11

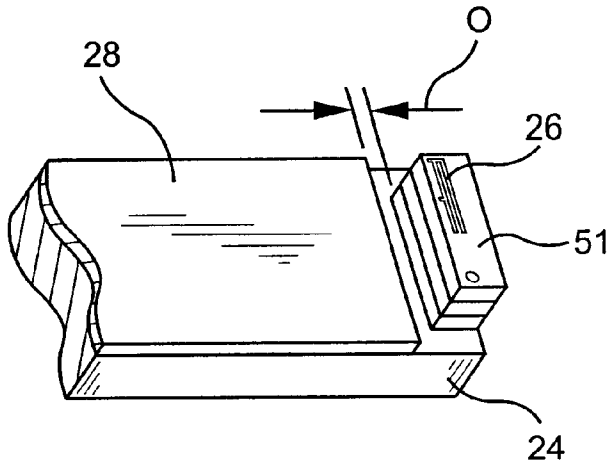

ASYMMETRIC DIPOLE ANTENNA ASSEMBLY

CROSS REFERENCE TO RELATED APPLICATION

This application claims the benefit of priority pursuant to 35 USC §119(e)(1) from the provisional patent application filed pursuant to 35 USC §111(b): as Ser. No. 60/121,989 on Feb. 27, 1999, which disclosure is incorporated herein.

FIELD OF THE INVENTION

The present invention relates to an antenna assembly for a wireless communication devices, such as a cellular telephone. Particularly, the present invention relates to a compact asymmetric dipole antenna assembly. Still further, the present invention relates to an antenna assembly effective over two or more resonance frequency bands.

BACKGROUND OF THE INVENTION

Known wireless communications devices such as handheld cellphones and data modems (LANs) typically are equipped with an external wire antenna (whip), which may be fixed or telescoping. Such antennas are inconvenient and susceptible to damage or breakage. The overall size of the wire antenna is relatively large in order to provide optimum signal characteristics. Furthermore, a dedicated mounting means and location for the wire antenna are required to be fixed relatively early in the engineering process. Several antenna assemblies are known, and include:

Quarter Wave Straight Wire

This is a ¼ wavelength external antenna element, which operates as one side of a half-wave dipole. The other side of the dipole is provided by the ground traces of the transceiver's printed wiring board (PWB). The external ¼ wave element may be installed permanently at the top of the transceiver housing or may be threaded into place. The ¼ wave element may also be telescopically received into the transceiver housing to minimize size. The ¼ wave straight wire adds from 3–6 inches to the overall length of an operating transceiver.

Coiled Quarter Wave Wire

An external small diameter coil that exhibits ¼ wave resonance, and which is fed against the ground traces of the transceiver's PWB to form an assymetric dipole. The coil may be contained in a molded member protruding from the top of the transceiver housing. A telescoping ¼ wave straight wire may also pass through the coil, such that the wire and coil are both connected when the wire is extended, and just the coil is connected when the wire is telescoped down. The transceiver overall length is typically increased by ¾–1 inch by the coil.

Planar Inverted F Antenna (PIFA)

Consists of an external conducting plate which exhibits ¼ wave resonance, and is fed against the ground traces of the PWB of a transceiver to form an asymmetric dipole. The plate is usually installed on the back panel or side panel of a transceiver and adds to the overall volume of the device.

Patch

Typically consists of a planar dielectric material having a resonant structure on one major surface of the dielectric and a second ground plane structure disposed on the opposite major surface. A post may electrically couple (through the dielectric) the resonant structure to a coaxial feedline.

Additionally, there have been numerous efforts in the past to provide an antenna inside a portable radio communication device. Such efforts have sought at least to reduce the need to have an external whip antenna because of the inconvenience of handling and carrying such a unit with the external antenna extended.

SUMMARY OF THE INVENTION

The present invention replaces the external wire antenna of a wireless communication device with a planar conformal element which is installed within the housing of a wireless device and closely-spaced to the printed circuit board and antenna feedpoint of the wireless device. Electrical connection to the wireless device's main PWB may be achieved through automated production equipment, resulting in cost effective assembly and production. Electrical performance of the internal (embedded) antenna in wireless systems is nominally equal to that of a conventional wire antenna.

It is an object of the present invention to provide an antenna assembly which can resolve the above shortcomings of conventional antennas. Additional objects of the present invention include: the elimination of the external antenna and its attendant faults such as susceptibility to breakage and impact on overall length of the transceiver; the provision of an internal antenna that can easily fit inside the housing of a wireless transceiver such as a cellphone, with minimal impact on its length and volume; the provision of a cost effective antenna for a wireless transceiver, having electrical performance comparable to existing antenna types; and, the reduction in SAR (specific absorption rate) of the antenna assembly, as the antenna exhibits reduced transmit field strength in the direction of the user's ear for hand held transceivers such as a cellular telephone, when compared to the field strength associated with an external wire type antenna system.

The present invention provides an antenna assembly including a first planar element having a conductive trace, and at least one conductive member disposed near the first element to jointly form an asymmetrical dipole antenna. The resonant frequency range of the dipole is primarily determined by the dimensions of the conductive trace on the first planar element, which may be selected to exhibit ¼ wave resonance. The elongate second element has a minimum electrical length dimension of ¼ wavelength at the lowest frequency of operation, and may consist solely of the ground traces of the printed wiring board(s) of a wireless transceiver such as a cellular telephone.

In the preferred embodiment the first printed circuit element is rectangular having a thickness in the range 0.010–0.125 inches. Alternatively, the conductive traces may be printed on any number of conventional dielectric materials having a low to moderate dielectric loss such as plastics and fiberglass. Furthermore, the rectangular size of the first element may conform to available volume in the housing of a wireless transceiver such as a cellular telephone. The antenna assembly may be excited or fed with 50 ohm impedance, which is a known convenient impedance level found at the receiver input/transmitter output of a typical wireless transceiver.

In a preferred embodiment, the antenna assembly includes a matching network defined between a shorted end of the printed conducting trace (shorted to the second elongate conductor element (ground plane)) and a tap point further along the trace which results in a 50 ohm impedance referenced to a nearby point on the elongate conductor element. This feed system makes possible very close spacing between the first and second planar elements of the asymmetric dipole antenna, which minimizes the volume required when integrating the antenna into a wireless transceiver. Spacing on the order of 0.007 wavelength at the lowest frequency of operation between the elements is typically achieved in this manner. The spacing required without this matching system is typically 0.021 wavelength. The printed

circuit element(s) of this invention are functional without the matching network, but may require increased spacing from the conductor element.

BRIEF DESCRIPTION OF THE DRAWINGS

The above set forth and other features of the invention are made more apparent in the following Detailed Description of the Preferred Embodiments when read in conjunction with the attached drawings, wherein:

FIG. **1** is an exploded perspective view of a wireless communication device incorporating an antenna assembly according to the present invention;

FIG. **2** illustrates a side elevation view of an antenna assembly of the present invention;

FIG. **3** illustrates a side elevational view of another embodiment of an antenna assembly of the present invention;

FIG. **4** illustrates a side elevational view of yet another embodiment of an antenna assembly of the present invention;

FIG. **5** illustrates a portion of the antenna assembly of FIGS. **1–4** and shows the matching network, resonant portion, and electrical connection feedpoints for a single-band planar printed circuit antenna element/half dipole;

FIG. **6** illustrates a front elevational view of a dual band antenna assembly according to the present invention;

FIG. **7** illustrates a front elevational view of a dual band antenna assembly according to the present invention;

FIG. **8** illustrates a front elevational view of another antenna assembly according to the present invention without impedance matching circuit;

FIG. **9** illustrates a front elevational view of a tri-band antenna assembly according to the present invention;

FIG. **10** illustrates an exploded perspective view of another antenna assembly according to the present invention;

FIG. **11** illustrates a perspective view of the antenna assembly of FIG. **10**; and

FIG. **12** illustrates yet another embodiment of an antenna assembly according to the present invention.

DETAILED DESCRIPTION OF PREFERRED EMBODIMENTS

Referring now to the drawings, wherein like numerals depict like parts throughout, preferred embodiments of an antenna assembly **20** according to the present invention are illustrated in FIGS. **1–12**. The antenna assembly **20** may implemented within single or multiple frequency wireless communication devices, for instance devices operating over the GPS (1575 MHz), cellular telephone (824–890 MHz and 860–890 MHz), PCS device (1710–1880 MHz, 1750–1870 MHz, and 1850–1990 MHz), cordless telephone (902–928 MHz), or BLUETOOTH™ specification (2.4–2.5 GHz.) frequency ranges. Those skilled in the relevant arts may appreciate that principles of the present invention are equally applicable for antenna assemblies operating at alternative frequency ranges. In alternative embodiments, the dimensions of the antenna assembly **20** may be scaled in proportion to provide operation at other frequencies, including frequencies in the 800 MHz. to 3,000 MHz. range. Such modifications are considered within the scope of the applicant's claims.

FIG. **1** illustrates an antenna assembly **20** disposed within a wireless communication device, such as a cellular telephone **10**. The antenna assembly **20**, disposed near the upper portion of the device **10** (away from the user's hand during operation), is received and incorporated within the housing **12** of the device **10**. Although the antenna assembly **20** can be installed in locations within or external to the housing **12**, it is presently preferred that it be disposed within the housing **12**. Wireless communication device **10** contains electrical apparatus, such as a receiver and/or transmitter, herein referred for convenience together as a transceiver component **14**.

Referring also to FIGS. **2–3**, the antenna assembly **20** includes first and second planar elements **22**, **24** disposed in substantially perpendicular relationship. A first conductor trace **26** is disposed upon the first planar element **22**, and a second conductor trace **28** is disposed upon the second planar element **24**. The first conductor trace **26** is operatively coupled to the transceiver signal input/output componentry **14** via connection **30**. The first conductor trace **26** is disposed upon a major surface of the first planar element **22** and directed in a direction 'Z" away from the second conductor trace **28**.

The first and second conductor traces **26**, **28** of the antenna assembly **20** are disposed upon respective first and second planar elements **22**, **24**, which may be a printed wiring boards (PWB) or similar materials capable of supporting the conductor traces. The meandering first conductor trace **26** has a length dimension which is substantially larger than the dimensions of the first planar element **22**. Preferably, the second conductor trace **28** is the printed ground plane circuit of the transceiver **14**. Both the first and second conductor traces **26**, **28** may be disposed upon respective PWB using known circuit fabrication techniques, such as surface printing, photolithography, and etching processes. The first planar element **22** and/or the second planar element **24** may be configured to conform to a portion of the housing **12**, for example to assume a convex or more complex form. Those skilled in the arts will appreciate that the design and selection of either the first or second planar elements **22**,**24** with reference to a particular wireless communication device may result in such complex shapes.

FIGS. **2** and **3** illustrate embodiments of the antenna assembly **20** wherein the first planar element **22** is substantially perpendicular to the second planar element **24**. The isolation distance 'D' between the ground plane **(23)** of the transceiver **14** and the first planar element **22** is approximately 3 millimeters (or approximately 0.007 λ at 900 MHz.). In FIG. **2**, portions of the first planar element **22** are disposed relative both major surfaces of the second planar element **24** (a "T" shaped configuration), as opposed to FIG. **3**, where the first planar element **22** extends from one major surface of the second planar element **24** (an "L" shaped configuration).

FIG. **4** illustrates another embodiment of the antenna assembly **20** wherein the first and second planar elements **22**, **24** are disposed in parallel orientation. The isolation distance 'D' is approximately 1 millimeter (at 900 MHz.). The first conductive trace **26** may be operatively coupled to the transceiver **14** through known surface mount interconnections **30**.

FIG. **5** illustrates the first planar element **22** and first conductor trace **26** of the embodiment of FIGS. **1–4**. The conductor trace **26** is disposed upon a single major surface of the first planar element **22** and is operatively coupled to the transceiver electronics **14** of the second planar element **24** via a feedpoint **32**. One end **34** of the conductive trace **26** is coupled to the second conductive trace **28** (the ground plane of the second planar element **24**) via leads **36** or other electrical connection. A length of ends **36** should preferably be minimized. A distance 'M' further along the conductive trace **24**, the feedpoint connection **32** is made between the first conductive trace **26** and the transceiver electronics **14** of the second planar element **24**. The connections between the ground plane **24** and signal feed **32** may be achieved via plated through-holes in the first planar element **22**.

The region of the first conductor trace **26** between the ground connection **34** and the feedpoint **32** (the distance 'M') functionally operates a matching network to effect an approximate 50 ohm feedpoint. A 50 ohm feedpoint is thus defined across feedpoint **32** and ground trace **28**. The matching network length 'M' is approximately 0.03 λ (λ: a wavelength within the range of antenna operating frequencies).

Still referring to FIG. **5**, the first planar element **22** may be a printed wiring board or similar dielectric material having a range of thickness between 0.01 and 0.062 inches, for example. The first conductive trace **26** is disposed at the periphery of the first planar element **22** away from a central region **38**. The first conductive trace **26** includes variable width traces **26***a, b, c* with antenna broadband operational characteristics being a function of trace widths.

FIG. **6** illustrates another embodiment of the present invention which functions across a pair of frequency bands for dual band transceiver devices. The first conductive trace **26** includes both a high- and low-frequency band resonant portion **26***d, e*. The first conductive trace **26** is coupled to the ground plane of the second planar element **24** at location **34** and coupled to the signal generating circuit **14** at single feed point **32**. FIG. **7**, in comparison, includes a pair of feedpoints **32***a, b* between the first conductive trace **26** and the transceiver electronics **14**. The feedpoint **32***a* is for high frequency band, while the feedpoint **32***b* is for a lower frequency band. A ground connection is not required for the high frequency portion.

FIG. **8** illustrates another embodiment of the present invention. A simplified first conductive trace element **26** is disposed upon the first planar element **22** without a matching network as in the embodiments of FIGS. **1–7**. Embodiments of FIGS. **1–7** may also employ this feed method, however the isolation distance "D" may increase.

FIG. **9** illustrates another embodiment of the present invention. The antenna assembly of FIG. **9** depicts a tri-band antenna assembly **20** functioning across a cellular band (880–960 MHz.), a PCS band (1710–1880 MHz.) and the BLUETOOTH™ band (2.4–2.5 GHz.). Cellular and PCS band operation is effected through first conductor trace **40**. BLUETOOTH™ band operation is effected through conductor trace **42**. Conductor trace **40** is coupled to ground of the second planar element at point **44** and to the signal generating circuitry **14** via feedpoint **46**. Conductor trace **42** is coupled to ground of the second planar element **24** at point **48** and to the appropriate signal generating circuitry via feedpoint **50**. Dimensions for preferred embodiments of the antenna assembly of FIG. **10** are included in Table **1**. Horizontal and vertical dimensions are measured with respect to origin point 'O'.

TABLE 1

Position	Distance from Origin Point 'O' (Inches)
A	0.000
B	.075–1.905
C	.305–7.747
D	.365–9.271
E	.415–10.541
F	.703–17.856
G	.820–20.828
H	.885–22.479
I	1.048–26.619
J	1.080–27.432
K	1.300–33.020
L	1.415–35.941
M	1.485–37.719
N	1.500–38.100
O	.015–.381

TABLE 1-continued

Position	Distance from Origin Point 'O' (Inches)
P	.105–2.667
Q	.151–3.835
R	.216–5.486
S	.422–10.719
T	.484–12.294
U	.529–13.437
V	.544–13.818
W	.559–14.199
X	.574–14.580
Y	.585–14.860
Z	.600–15.240
AA	1.400–35.560
BB	1.385–35.179
CC	1.227–31.166
DD	1.202–30.531
EE	.953–24.206
FF	.928–23.571
GG	.807–20.500
HH	.782–19.863
II	.532–13.513
JJ	.507–12.878
KK	.040–1.016
LL	.015–.381
MM	.560–14.224
NN	.545–13.843
OO	.515–13.081
PP	.500–12.700
QQ	.450–11.430
RR	.360–9.144
SS	.280–7.112
TT	.245–6.223
UU	.193–4.902
VV	.075–1.905
WW	0.000

FIGS. **10–11**illustrate another embodiment of an antenna assembly according to the present invention. FIG. **10** shows an exploded view, and FIG. **11** illustrates an assembled perspective view with the first antenna element **51** disposed upon a second planar element **24**. First antenna element **51** consists of three substantially identical dielectric sections **52–54** which are disposed upon each other in a laminated or superimposed fashion. Electrical connection between conductor traces **26** disposed upon the dielectric sections **52–54** are made through plated through holes and associated conductors **56**. The assembly **51** may be surface mounted to one side of the planar element **24** via the mounting pad **57** to the circuit ground trace **28** and via mounting pad **58** to the circuit signal input/output **14**. The isolation distance "D" between the assembly **(51)** and the ground plane **(28)** may be reduced to less than 1 mm. Overall dimensions (height× width×length) for operation over 824–894 MHz are approximately 6 mm×4.5 mm×38 mm.

FIG. **12** illustrates another embodiment of the first planar element of present invention which is adapted to be secured relative the second planar element via mounting tabs **60–62**. These tabs **60–62** are sized to be received into corresponding elements on the second planar element. A dimension "T" is chosen to be greater than or equal to the thickness of the printed wiring board. Connections are made to transceiver circuitry **14** at tab **60** and **61**. Tab **62** is partially metallized and provides mechanical support for the first planar element **22**. Tabs **60, 61, 62** thus provide both mechanical and electrical connection between the first planar element **22** and the second planar element **24**. Connections may be made through known fabrication techniques, including solder reflow processes and other high volume production techniques.

Although the invention has been described in connection with particular embodiments thereof other embodiments, applications, and modifications thereof which will be obvi-

ous to those skilled in the relevant arts are included within the spirit and scope of the invention.

We claim:

1. An asymmetric dipole antenna assembly for a communications device operating at a predetermined wavelength and having a transceiver circuit including a signal output and a ground plane, said antenna assembly comprising:

a first dipole half including a first conductor trace disposed upon a first dielectric substrate, said first conductor trace having a first end and a one-quarter wavelength electrical length; and

a second dipole half including a second conductor trace disposed upon a second dielectric substrate, said second conductor trace being operatively coupled to the ground plane of the transceiver circuit;

said first conductor trace being operatively coupled proximate said first end to the ground plane of the transceiver circuit;

said first conductor trace being operatively coupled to the transceiver circuit signal output at a predetermined distance away from the first end; and

said first conductor trace being disposed a predetermined isolation distance away from the second conductor trace.

2. An asymmetric dipole antenna assembly according to claim **1**, wherein the predetermined isolation distance is approximately zero.

3. An asymmetric dipole antenna assembly according to claim **1**, wherein the predetermined isolation distance is less than 0.03 times the predetermined wavelength.

4. An asymmetric dipole antenna assembly according to claim **1**, wherein the first conductor trace includes first conductor element portions having different widths.

5. An asymmetric dipole antenna assembly according to claim **1**, wherein the first conductor trace is disposed upon a major surface of the first dielectric substrate directed away from the transceiver circuit.

6. An asymmetric dipole antenna assembly according to claim **1**, wherein the first dielectric substrate is approximately parallel with the second dielectric substrate.

7. An asymmetric dipole antenna assembly according to claim **1**, wherein the first dielectric substrate is disposed proximate an upper portion of the communications device and away from a user's hand during normal operation.

8. An asymmetric dipole antenna assembly according to claim **1**, wherein the signal output includes two different frequency bands of signal information, and wherein separate portions of the first conductor trace radiate within the different two frequency bands during operation.

9. An asymmetric dipole antenna assembly according to claim **8**, wherein the two different frequency bands are selected from among the group containing: 860–980 MHz and 1750–1870 Mhz; 824–890 MHz and 1850–1990 MHz; and, 902–928MHz, 2.4–2.5 GHz, 1575 MHz, and 1710–1880 MHz.

10. An asymmetric dipole antenna assembly according to claim **8**, further comprising:

a second conductor trace disposed upon the first dielectric substrate, said second conductor trace coupled to the signal output to resonate at a frequency within either 2.4–2.5 GHz or at approximately 1575 MHz.

11. An asymmetric dipole antenna assembly for a hand-held communications device having a transceiver circuit including a signal output and a ground plane, said antenna assembly comprising:

a first dipole half including a first conductor trace disposed upon a first dielectric substrate, said first conductor trace having a first end and an electrical length of approximately one quarter of a predetermined wavelength, said first conductor trace being operatively coupled to the ground plane proximate the first ends said first dipole half being disposed near an upper portion of the hand-held communications device and away from a user's hand during operation;

a second dipole half including a second conductor trace disposed upon a second dielectric substrate, said second conductor trace being operatively coupled to the ground plane;

said first conductor trace being coupled a predetermined isolation distance away from the second conductor trace; and

said first conductor trace being operatively coupled to the transceiver circuit signal output at a predetermined distance away from the first end.

12. An asymmetric dipole antenna assembly according to claim **11**, wherein the first dielectric substrate is disposed in substantially perpendicular relationship to the second dielectric substrate.

13. An asymmetric dipole antenna assembly according to claim **11**, wherein the predetermined distance is approximately 0.03 times the predetermined wavelength.

14. An asymmetric dipole antenna assembly according to claim **11**, wherein the first conductor trace includes first conductor trace portions having different widths.

15. An asymmetric dipole antenna assembly according to claim **11**, wherein the first conductor trace is disposed upon a major surface of the first dielectric substrate directed away from the transceiver circuit.

16. An asymmetric dipole antenna assembly according to claim **11**, wherein said first dipole half further includes a plurality of conductor traces disposed upon a plurality of superimposed dielectric substrates each having a plated through hole, said plurality of conductor traces being operatively coupled via said plated through holes to define the first dipole half.

17. A dipole antenna assembly for a communications device, said device having a transceiver circuit and a ground plane, comprising:

a first dipole half including a first conductor trace disposed upon a major surface of a first dielectric substrate;

a second dipole half including a second conductor trace disposed upon a second dielectric substrate, said second conductor trace being operatively coupled to the ground plane, said second dielectric substrate having a peripheral edge;

said first conductor trace having an effective electrical length of one quarter of a predetermined wavelength, said first conductor trace having a first end and a plurality of trace portions having different trace widths;

said first conductor trace being operatively coupled to the ground plane proximate said first end and being operatively coupled to the transceiver circuit at a predetermined distance away from the first end along said first conductor trace; and

said first conductor trace being disposed a predetermined isolation distance away from the second conductor trace proximate said peripheral edge.

18. A dipole antenna assembly according to claim **17**, wherein the predetermined distance is approximately 0.03 times the predetermined wavelength.

19. A dipole antenna assembly according to claim **17**, wherein the first dielectric substrate is disposed proximate an upper portion of the communications device during normal operation.

20. A dipole antenna assembly for a communications device, said device having a transceiver circuit and a ground plane, comprising:

a first dipole half including a first elongated conductor pattern disposed upon a major surface of a first dielectric substrate;

a second dipole half including a second conductor pattern disposed upon a second dielectric substrate, said second conductor pattern being operatively coupled to the ground plane, said second dielectric substrate having a peripheral edge;

said first conductor pattern having an effective electrical length of approximately one quarter of a predetermined wavelength, said first conductor pattern having a first end and a feedpoint disposed a predetermined distance away from said first end;

said first conductor pattern being operatively coupled to the ground plane at said first end and being operatively coupled to the transceiver circuit at the feedpoint; and

said first dielectric substrate being disposed in substantially perpendicular relationship to the second dielectric substrate proximate said peripheral edge.

21. A dipole antenna assembly according to claim **20**, wherein the predetermined distance is approximately 0.03 times the predetermined wavelength.

22. A dipole antenna assembly according to claim **20**, wherein the first conductor pattern includes first conductor pattern portions having different widths.

23. A dipole antenna assembly according to claim **20**, wherein the first conductor pattern is disposed upon a major surface of the first dielectric substrate directed away from the transceiver circuit.

24. A dipole antenna assembly according to claim **20**, wherein the first dielectric substrate is substantially parallel to the second dielectric substrate.

25. An asymmetric dipole antenna assembly for a wireless communications device operating at a predetermined wavelength and having a transceiver circuit including a signal output and a ground plane, said transceiver circuit disposed upon a printed wiring board having a pair of opposed major surfaces including a first major surface directed away from a user during operation and a second major surface directed toward the user during operation, said ground plane disposed upon the printed wiring board, said antenna assembly comprising:

a first dipole half including a first conductor trace disposed upon a first dielectric substrate, said first dielectric substrate being aligned substantially parallel with the printed wiring board and disposed relative the first major surface of the printed wiring board, said first conductor trace having a first end and a one-quarter wavelength electrical length; said first conductor trace being operatively coupled proximate said first end to the ground plane of the transceiver circuit, and said first conductor trace being operatively coupled to the transceiver circuit signal output at a predetermined distance away from the first end; and

a second dipole half including a second conductor trace disposed upon a second dielectric substrate, said second conductor trace being operatively coupled to the ground plane of the transceiver circuit, and said first conductor trace being disposed a predetermined isolation distance away from the second conductor trace.

26. An asymmetric dipole antenna assembly according to claim **25** wherein the predetermined isolation distance is less than 0.03 times the predetermined wavelength.

27. An asymmetric dipole antenna assembly according to claim **25**, wherein the first conductor trace includes first conductor element portions having different widths.

28. An asymmetric dipole antenna assembly according to claim **25**, wherein the first dielectric substrate is disposed proximate an upper portion of the communications device and away from a user's hand during normal operation.

29. An asymmetric dipole antenna assembly according to claim **25**, wherein the signal output includes two different frequency bands of signal information, said two frequency bands selected from among the group including, 824–890 MHz, 860–890 MHz, 1710–1880 MHz, 1750–1870 MHz, 1850–1990 MHz, 902–928 MHz, 2.4–2.5 GHz, and 1575 MHz, and wherein separate portions of the first conductor trace resonate within the different two frequency bands during operation.

30. An assembly for a hand-held communications device, said assembly comprising:

a transceiver circuit including, a signal output and a ground plane, a first dipole half including a first conductor trace disposed upon a dielectric substrate, said first conductor trace having a first end and an electrical length of approximately one quarter of a predetermined wavelength, said first conductor trace being operatively coupled to the ground plane proximate the first end, said first dipole half being disposed near an upper portion of the hand-held communications device and away from a user's hand during operation, said first conductor trace being coupled a predetermined isolation distance away from the second conductor trace, and said first conductor trace being operatively coupled to the transceiver circuit signal output at a predetermined distance away from the first end; and

a second dipole half including a second conductor trace disposed upon a second dielectric substrate, said second conductor trace being operatively coupled to the ground plane

31. An assembly according to claim **30**, wherein the first dielectric substrate is disposed in substantially peipendicular relationship to the second dielectric substrate.

32. An assembly according to claim **30**, wherein the first dielectric substrate is disposed in substantially parallel relationship to the second dielectric substrate.

33. An assembly according to claim **30**, wherein the first conductor trace is disposed upon a major surface of the first dielectric substrate directed away from the transceiver circuit.

34. An assembly according to claim **30**, wherein said first dipole half further includes a plurality of conductor traces disposed upon a plurality of superimposed dielectric substrates each having a plated through hole, said plurality of conductor traces being operatively coupled via said plated through holes to define the first dipole half.

* * * * *