US006509882B2

(12) **United States Patent**
McKivergan

(10) **Patent No.: US 6,509,882 B2**
(45) **Date of Patent: Jan. 21, 2003**

(54) **LOW SAR BROADBAND ANTENNA ASSEMBLY**

(75) Inventor: **Patrick D. McKivergan**, Scotts Valley, CA (US)

(73) Assignee: **Tyco Electronics Logistics AG** (CH)

(*) Notice: Subject to any disclaimer, the term of this patent is extended or adjusted under 35 U.S.C. 154(b) by 0 days.

(21) Appl. No.: **09/737,215**

(22) Filed: **Dec. 14, 2000**

(65) **Prior Publication Data**

US 2002/0075187 A1 Jun. 20, 2002

Related U.S. Application Data

(60) Provisional application No. 60/170,600, filed on Dec. 14, 1999.

(51) **Int. Cl.**[7] **H01Q 9/28**

(52) **U.S. Cl.** ..... **343/818**; 343/700 MS; 343/702; 343/795

(58) **Field of Search** ..... 343/700 MS, 702, 343/795, 814, 815, 816, 817, 818, 819, 829, 846; H01Q 9/28

(56) **References Cited**

U.S. PATENT DOCUMENTS

4,072,951 A		2/1978	Kaloi	343/700
4,494,120 A	*	1/1985	Garay	343/702
4,584,585 A		4/1986	Marko et al.	343/702
4,591,863 A		5/1986	Patsiokas	343/702
4,628,322 A		12/1986	Marko et al.	343/702
4,700,194 A		10/1987	Ogawa et al.	343/700
4,849,765 A		7/1989	Marko	343/702
4,924,237 A		5/1990	Honda et al.	343/702
5,061,939 A		10/1991	Nakase	343/700
5,148,181 A		9/1992	Yokoyama et al.	343/702
5,173,715 A	*	12/1992	Rodal et al.	343/795
5,231,407 A		7/1993	McGirr et al.	343/700
5,291,210 A	*	3/1994	Nakase	343/700 MS
5,420,596 A		5/1995	Burrell et al.	343/700
5,510,802 A		4/1996	Tsuru et al.	343/700
5,537,123 A		7/1996	Mandai et al.	343/700
5,541,610 A		7/1996	Imanishi et al.	343/702
5,550,554 A		8/1996	Erkocevic	343/828
5,583,521 A		12/1996	Williams	343/702
5,585,807 A		12/1996	Takei	343/702
5,627,550 A		5/1997	Sanad	343/700
5,680,144 A		10/1997	Sanad	343/700
5,909,198 A		6/1999	Mandei et al.	343/895
5,912,647 A		6/1999	Tsuru et al.	343/700
5,929,812 A		7/1999	Aminzadeh	343/700
5,929,813 A		7/1999	Eggleston	343/700
5,933,116 A		8/1999	Svesada et al.	343/702
5,936,583 A		8/1999	Sekine et al.	343/702

(List continued on next page.)

FOREIGN PATENT DOCUMENTS

EP	087683 A1	9/1983	H01Q/13/10
WO	09903166	1/1999	H01Q/1/24

OTHER PUBLICATIONS

PCT/US00/33943 International Search Report, dated Jun. 27, 2001.
PCT/US00/33943 Written Opinion, dated Oct. 23, 2001.

Primary Examiner—Tho Phan
(74) *Attorney, Agent, or Firm*—Fulbright & Jaworski L.L.P.

(57) **ABSTRACT**

A low specific absorption rate broadband antenna assembly for use with a wireless communication device. The antenna assembly includes a driven element and a parasitic element which are operatively connected to a radio frequency input/output port and a ground plane, respectively, and which are superposed above a predetermined region of a ground plane having a predetermined configuration. The driven and parasitic elements may take the form of traces or wires which are disposed away from each other by a distance related to the frequency of operation. The traces may be formed on one side of a suitable dielectric substrate such as a printed circuit board, while the wires may be self supporting and not requiring a dielectric substrate.

53 Claims, 13 Drawing Sheets

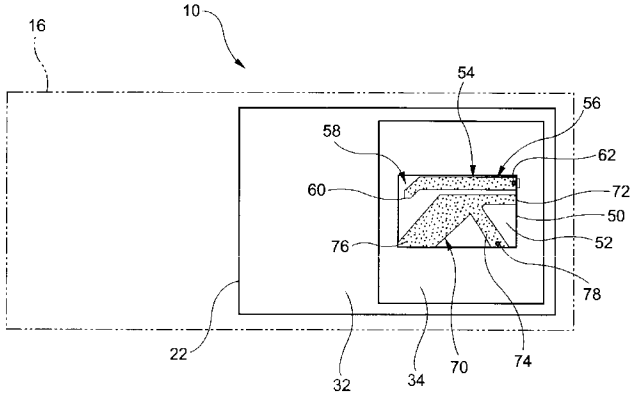

U.S. PATENT DOCUMENTS

5,940,041	A		8/1999	Koyama et al. 343/702
5,952,970	A		9/1999	Kawahata 343/703
5,966,097	A		10/1999	Fukasawa 343/700
6,002,367	A		12/1999	Englom et al. 343/700
6,008,762	A		12/1999	Nghiem 343/700
6,008,764	A		12/1999	Ollikainen et al. 343/700
6,008,773	A		12/1999	Matsuoka et al. 343/818
6,040,803	A	*	3/2000	Spall ..... 343/700 MS
6,157,348	A		12/2000	Openlander 343/846

* cited by examiner

FIG. 1

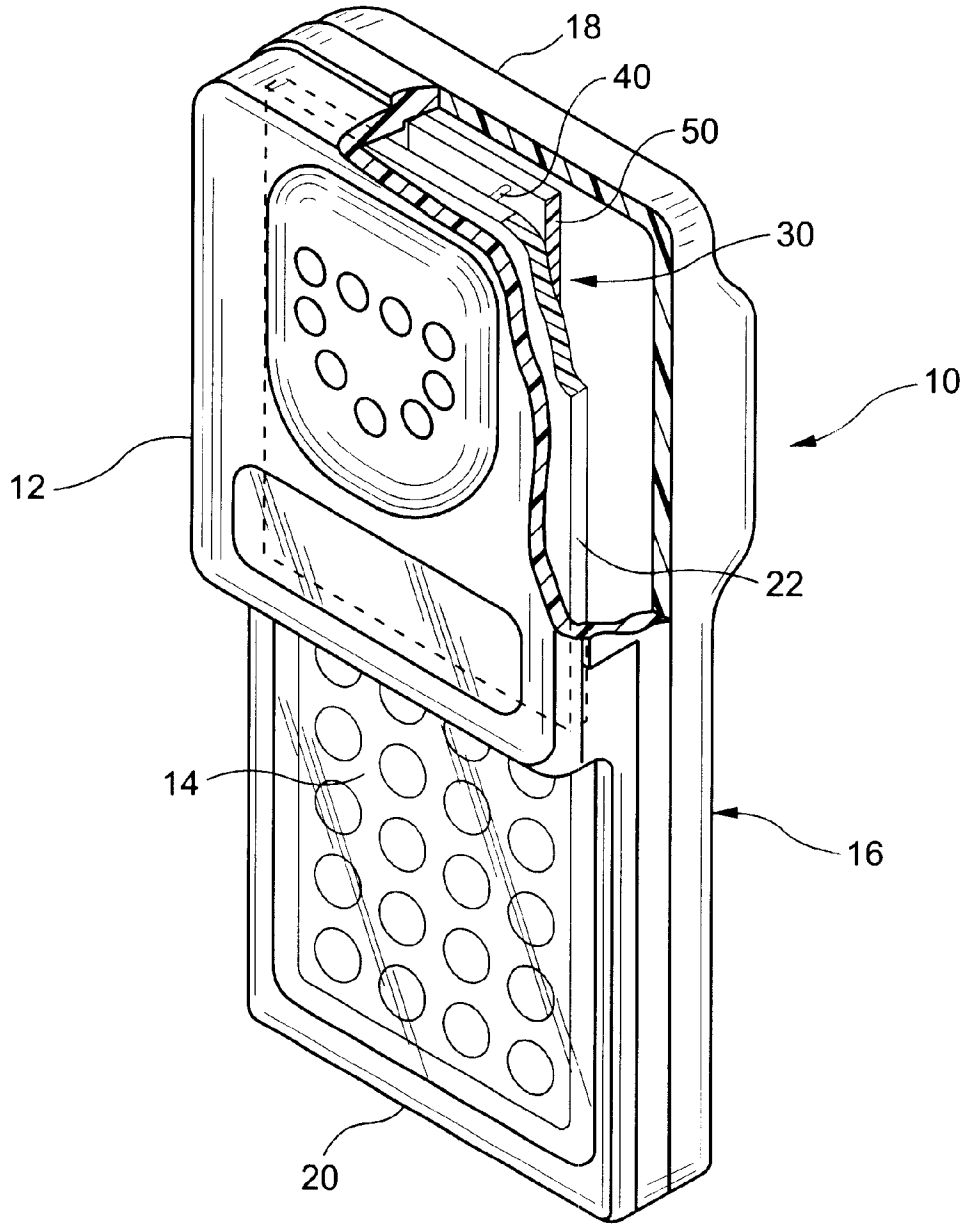

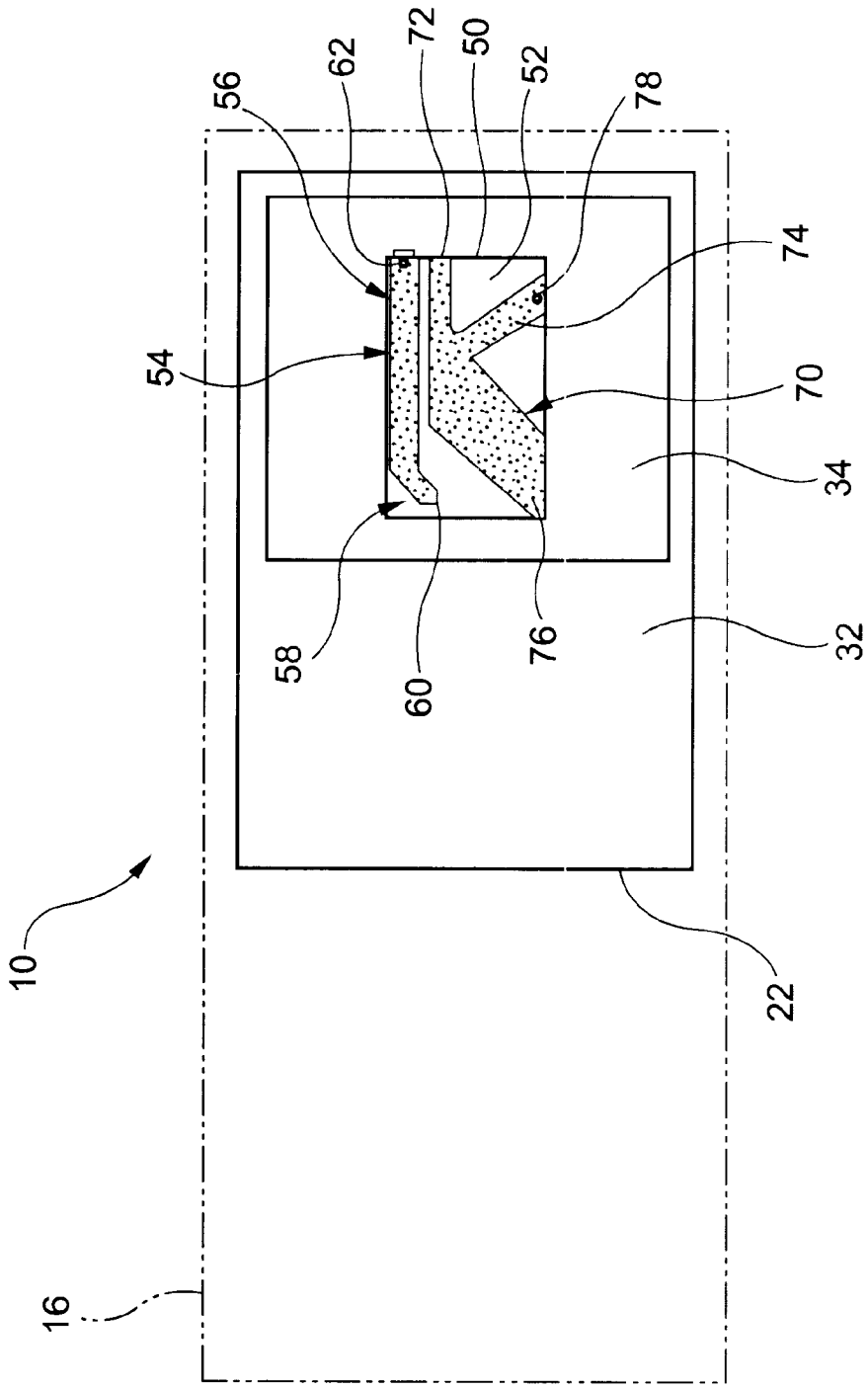

FIG. 2

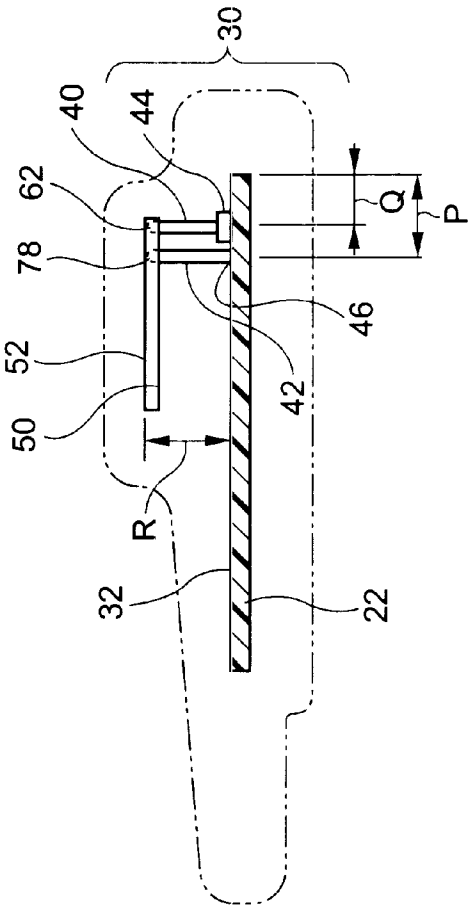

FIG. 3b

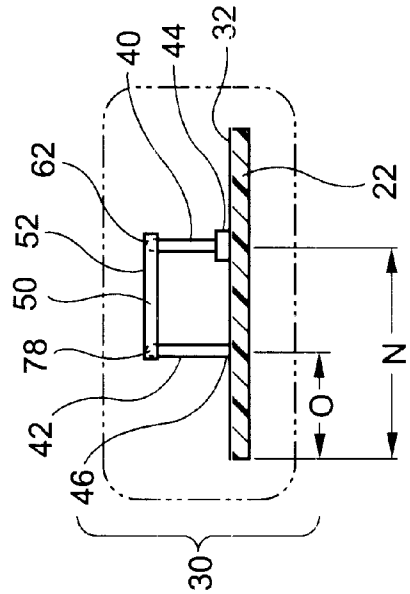

FIG. 3a

FIG. 4b

TABLE 1 UMTS BAND 1920-2170 MHz

DIMENSION	VALUE (inches)	VALUE(λ)
A	0.522	0.0904
B	0.880	0.1524
C	0.780	0.1351
D	0.700	0.1212
E	0.250	0.0433
F	0.600	0.1039
B	0.336	0.0582
H	0.157	0.0272
I	0.050	0.0087
J	0.402	0.0696
K	0.395	0.0684
L	0.309	0.0535
M	0.255	0.0442
N	1.007	0.1744
O	0.496	0.0859
P	0.388	0.0672
Q	0.250	0.0433
R	0.280	0.0485

FIG. 4a

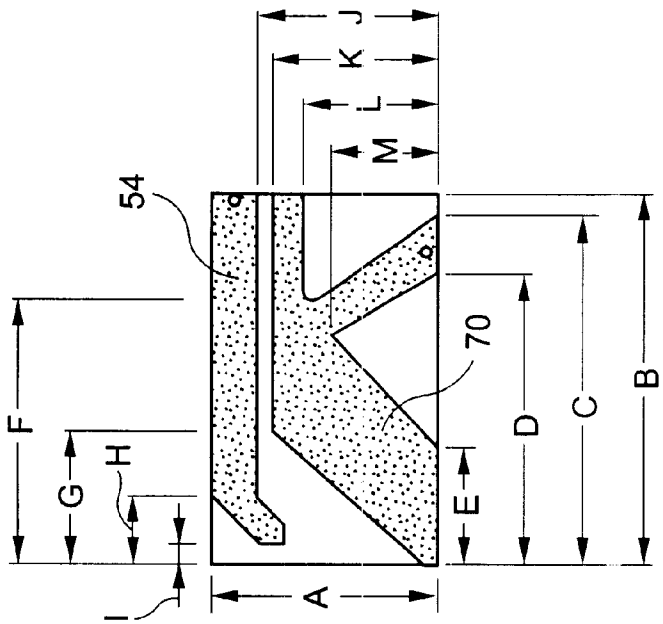

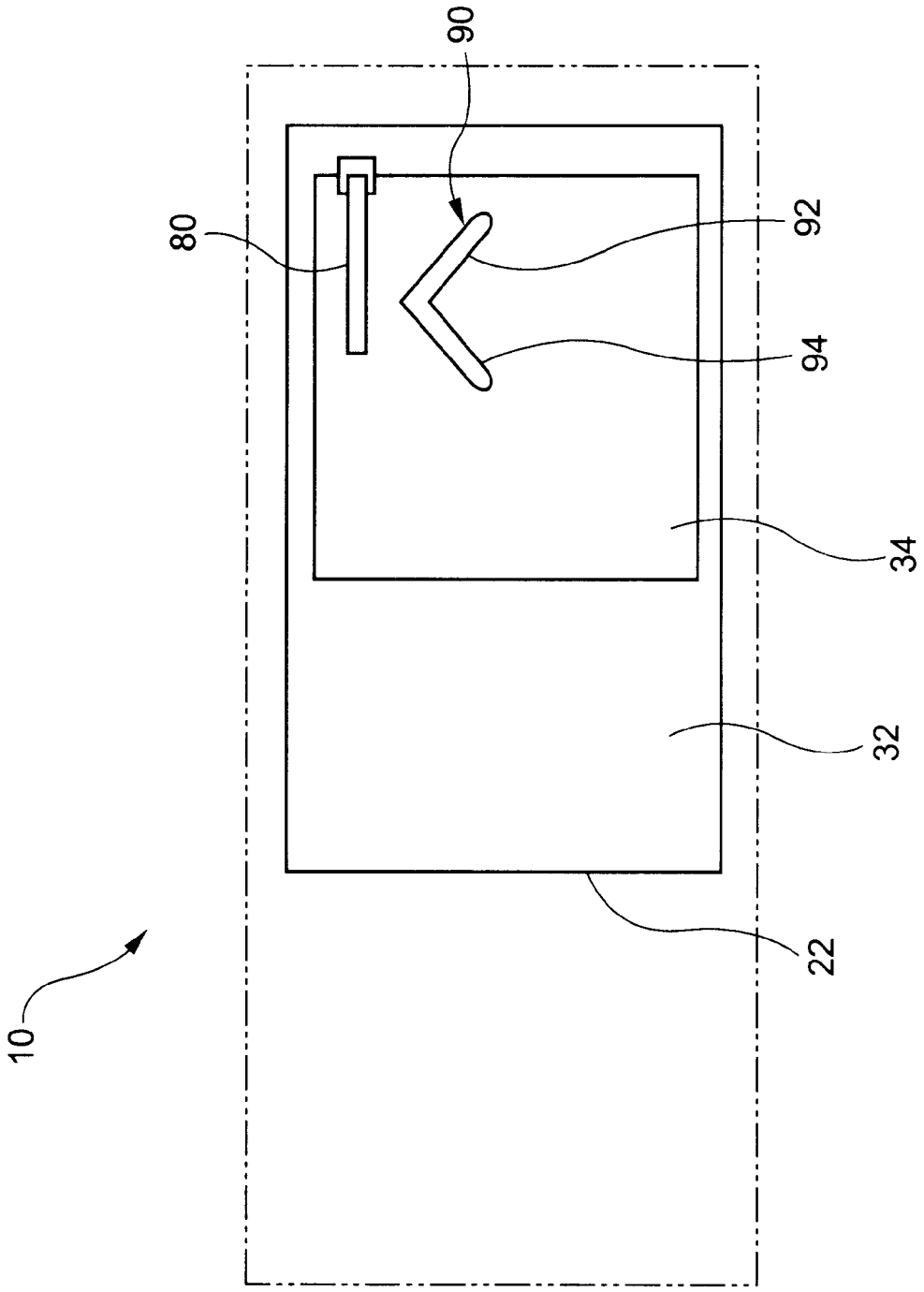

FIG. 5

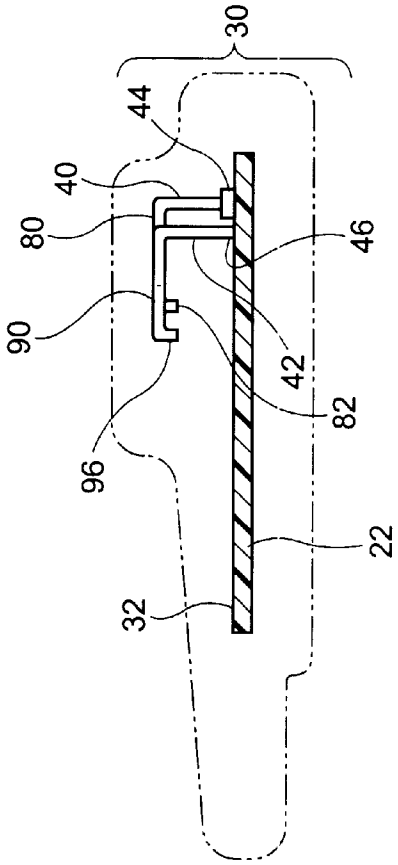

FIG. 6b

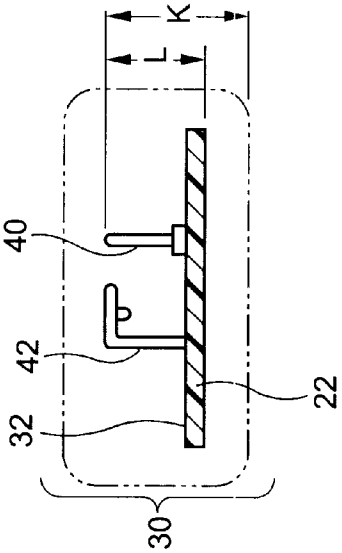

FIG. 6a

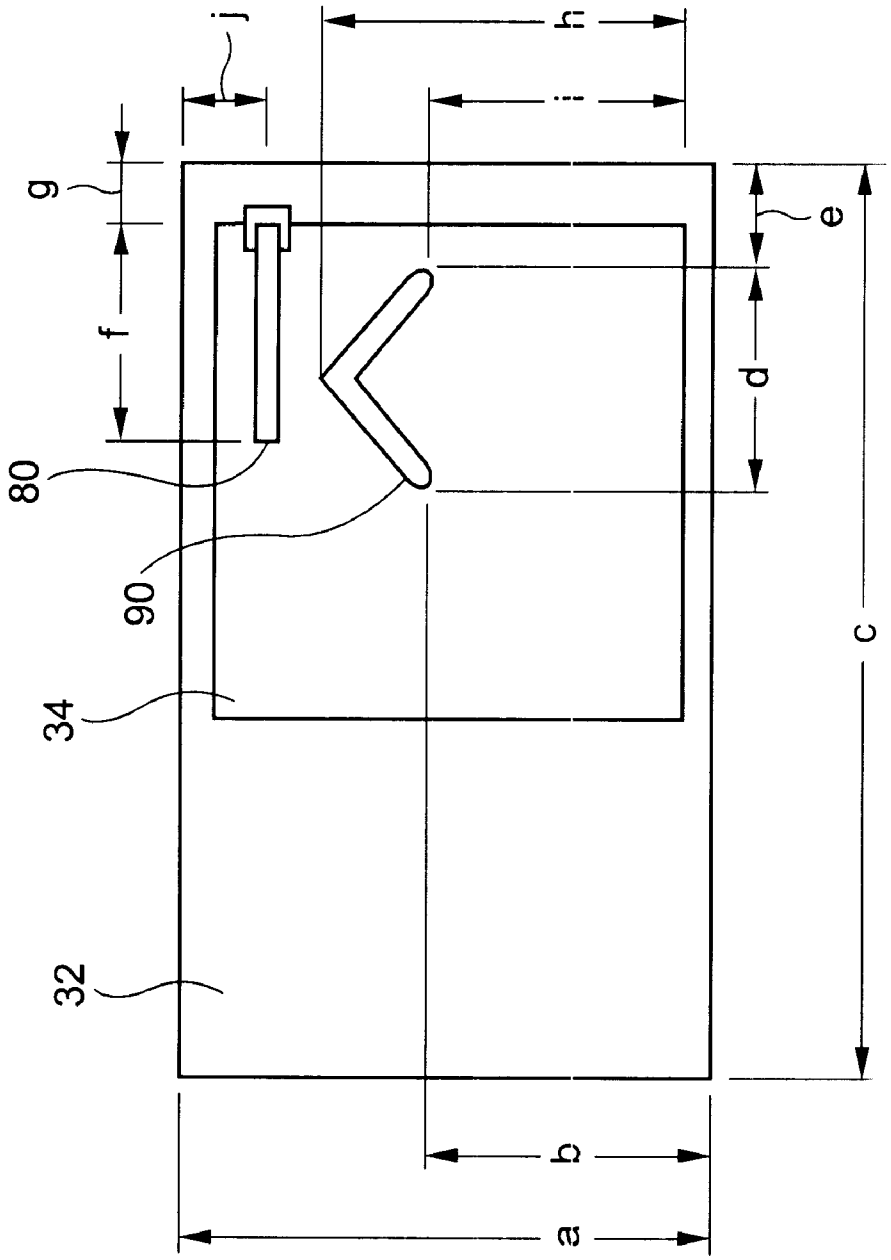

FIG. 7a

FIG. 7b

TABLE 2 UMTS BAND 1920-2170 MHz

DIMENSION	VALUE (inches)	VALUE(λ)
a	1.475	.2554
b	0.776	.1334
c	2.380	.4121
d	0.629	.1084
e	0.264	.0457
f	0.527	.0912
g	0.165	.0386
h	0.927	.1605
i	0.624	.1080
j	0.435	.0753
k	0.500	.0866
l	0.280	.0485

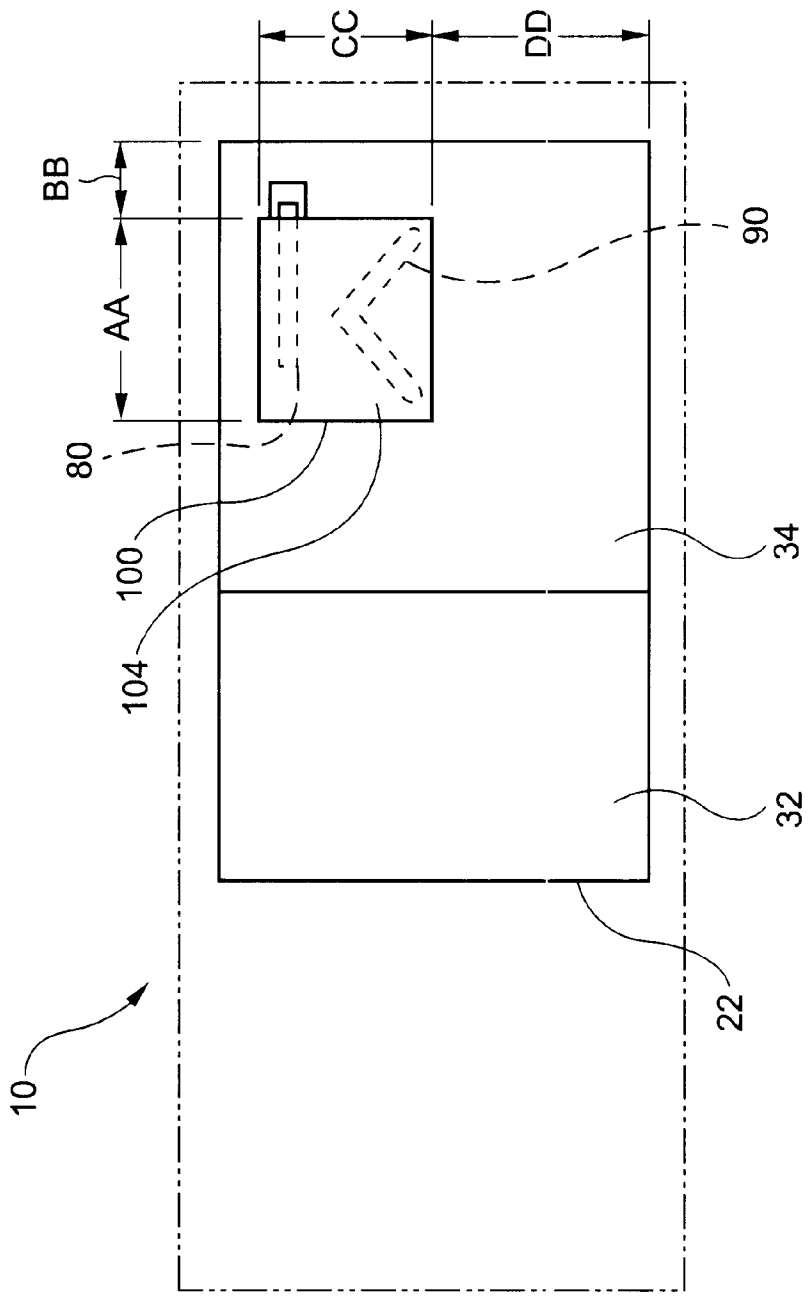

FIG. 8

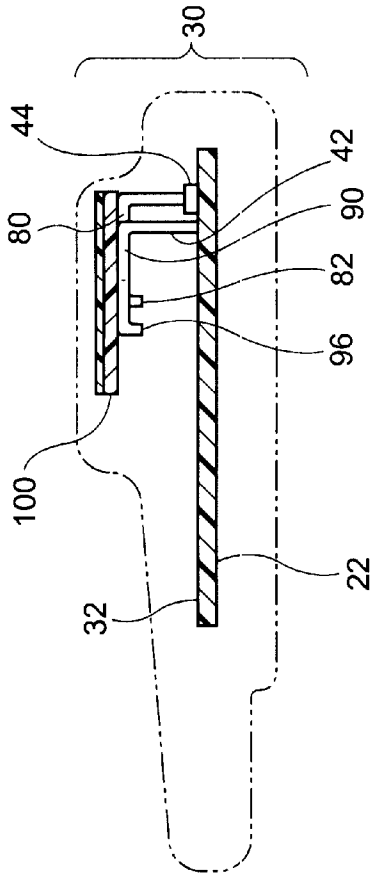

FIG. 9b

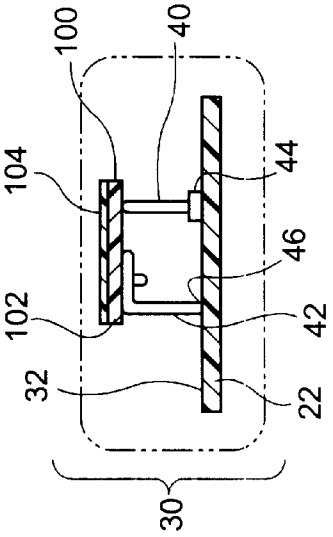

FIG. 9a

TABLE 3 UMTS BAND 1710-2500 MHz

DIMENSION	VALUE (inches)	VALUE(λ)
AA	0.879	.1522
BB	0.095	.0164
CC	0.756	.1309
DD	0.565	.0978

FIG. 9c

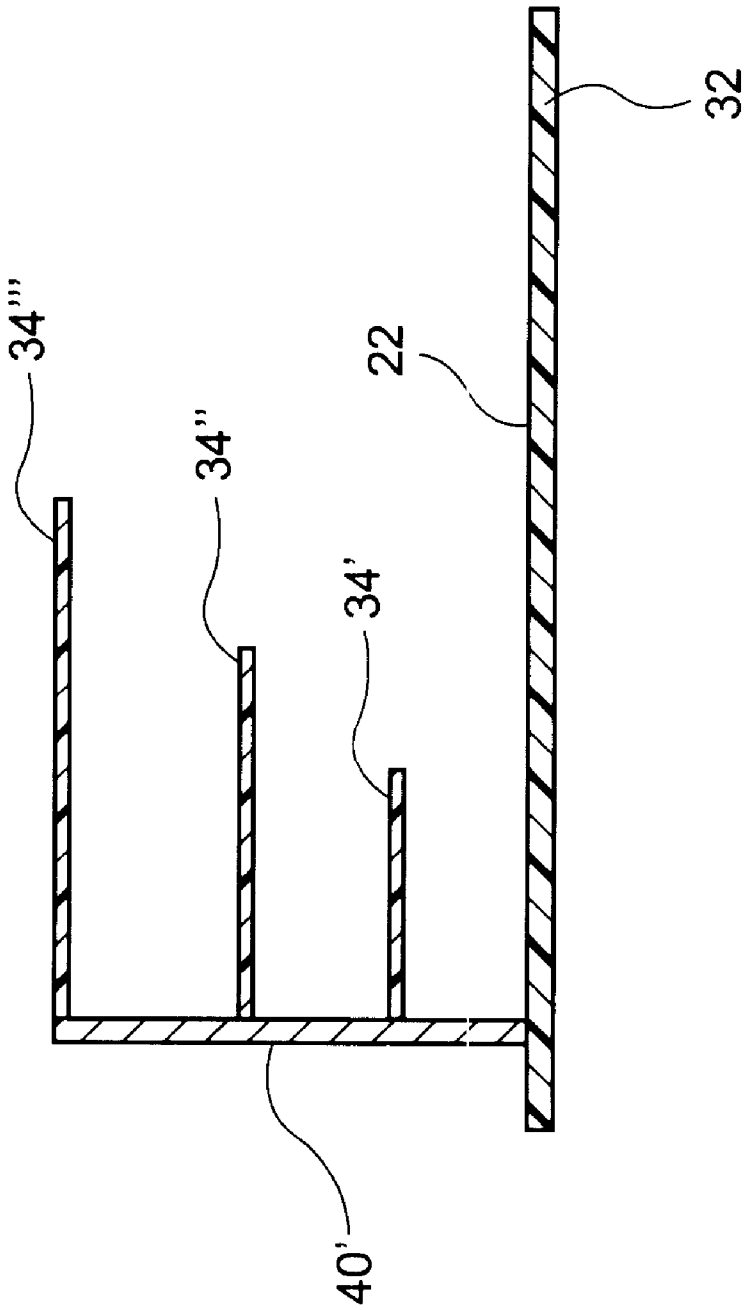

FIG. 10

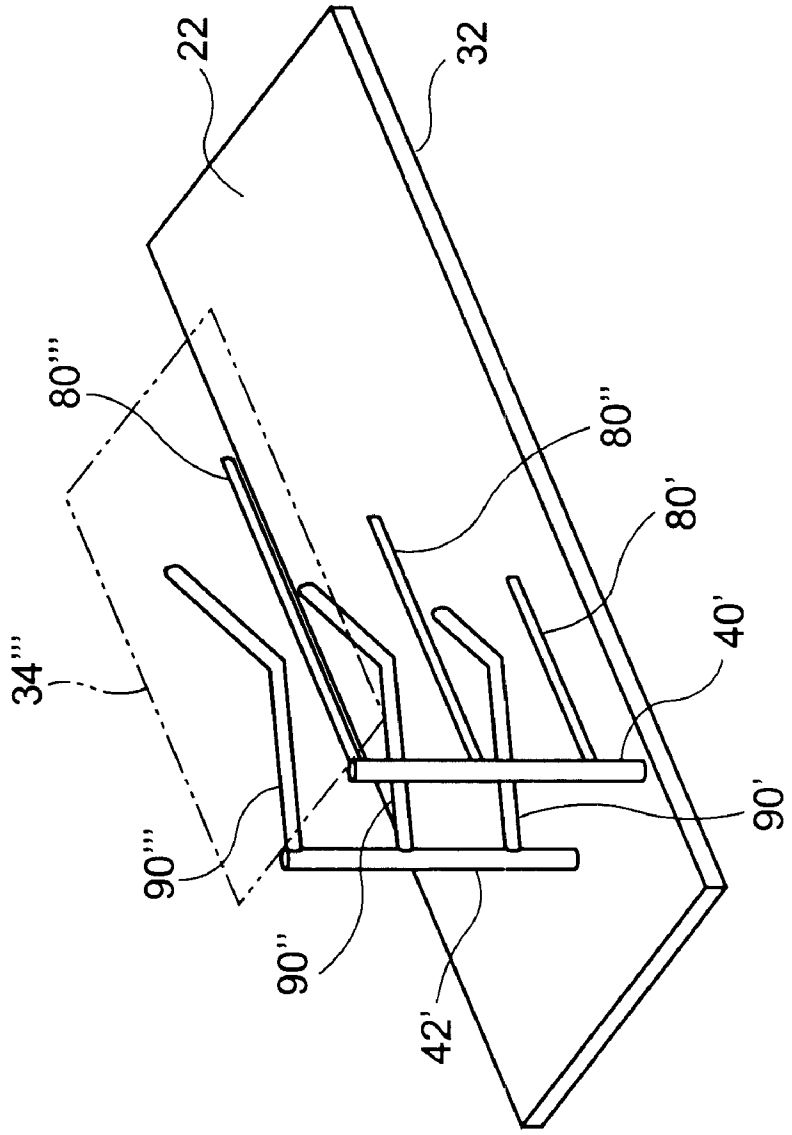

FIG. 11

LOW SAR BROADBAND ANTENNA ASSEMBLY

This application claims the benefit of U.S. Provisional Application No. 60/170,600 filed Dec. 14, 1999.

FIELD OF THE INVENTION

The present invention relates to an antenna assembly suitable for wireless transmission of analog and/or digital data, and more particularly to a highly compact broadband antenna assembly having a low specific absorption rate for use with wireless communication devices.

BACKGROUND OF THE INVENTION

There are a variety of antennas which are currently used in wireless communication devices. One type of antenna is an external half wave single or multi-band dipole. This antenna typically extends or is extensible from the body of a wireless communication device in a linear fashion during normal operation. Because of the physical configuration of this type of antenna, it is relatively insensitive to directional signal optimization. In other words, it is able to operate in a variety of positions without substantial signal degradation and is considered omni-directional. This means that not only do electromagnetic waves radiate equally toward and away from such an antenna, they also radiate equally toward and away from a user of a wireless communication device equipped with such an antenna. There is essentially no front-to-back ratio (with respect to a wireless communication device) and little or no Specific Absorption Rate (SAR) reduction with this type of antenna. With multi-band versions of this type of antenna, where resonances are achieved through the use of inductor-capacitor (LC) traps, gains of +2 dBi are common.

While this type of antenna is acceptable in some wireless communication devices, it has drawbacks. One significant drawback is that the antenna is external to the body of the communication device. This places the antenna in an exposed position where it may be accidentally or deliberately damaged. Another drawback of increasing importance is due to the inherent omni-directionality of the antenna. That is, that which enables the antenna to operate optimally, may subject a user of a wireless communication device to unacceptable levels of electromagnetic radiation when the device is operated proximate a user.

A related antenna is an external quarter wave single or multi-band asymmetric wire dipole. This antenna operates much like the aforementioned antenna, but requires an additional quarter wave conductor to produce additional resonances and has drawbacks similar to the aforementioned half wave single or multi-band dipole antenna.

Another type of antenna is the internal single or multi band asymmetric dipole. This type of antenna usually features quarter wave resonant conductor traces, which may be located on a planar printed circuit board within the body of a wireless communication device. Such antennas typically operate over one or more frequency ranges with gains of +1–2 dBi. This antenna may include one or more feed points for multiple band operation, and may require a second conductor for additional band resonance.

Yet another antenna is an internal single or multi-band Planar Inverted "F" Antenna (PIFA). This type of antenna features a single or multiple resonant planar conductor that operates over a second conductor or ground plane. With this type of antenna, gains of +1.5 dBi are typical.

Another type of antenna is a patch antenna. The patch antenna is a small, low profile antenna which is useful in

wireless communication devices. They typically have operating bandwidths (2:1 Standing Voltage Wave Ratio) on the order of a few percent. The operating bandwidth may be increased by adding parasitic elements. However, the total size of the antenna increases proportionately. The front to back ratio is usually poor unless the ground plane size is also increased. Thus, in creating a patch antenna with a relatively large bandwidth, the primary advantage of the patch antenna is defeated.

Each of these known various antenna structures have limitations, including a decrease in operational efficiency when positioned near a user's head. As a result, there exists a need for a broadband antenna assembly which is compact and lightweight. Yet another need exists for an unitary antenna structure having a wide bandwidth without a separate antenna structure for each transmission and reception band. Still another need exists for an antenna having reduced SAR. There is a need for an antenna assembly which may be incorporated into a variety of wireless communication devices. There is also a need for an antenna assembly with a reduced specific absorption rate.

SUMMARY OF THE INVENTION

A broadband antenna assembly having a low specific absorption rate for use with a wireless communication device. The antenna assembly includes a driven element and parasitic element, operatively connected to a radio frequency input/output port and a ground plane, such as provided by the printed circuit board of the communication device. The driven element may take the form of a first trace on a suitable substrate or take the form of a first body member, while the parasitic element may take the form of a second trace on a suitable substrate or take the form of a second body member. Importantly, the overall length of both the driven and parasitic element is substantially less than $\frac{1}{4}\lambda$..

In the first embodiment, the first and second traces are formed on one side of a suitable substrate such as a printed circuit board which is then superposed above a predetermined region of a ground plane by connector members. Generally, the first trace has two ends, with one end having a feed point to which a first connector member is attached, while the second trace has a plurality of segments with ends, with one of the ends having a ground connection point to which a second connector member is attached. The first and second connector members operatively couple the first trace to an input/output port and the second trace to the ground plane, respectively. Preferably, the input/output port is adjacent to and in a fixed position relative to the ground plane to enable the connector members to align and support the substrate and the traces. For optimum operation, the first and second traces are spaced apart from each other by a distance that establishes proper coupling to the frequency band of operation. As a result, a compact high bandwidth antenna is provided.

In the second embodiment of the antenna assembly, the first and second body members are superposed above a predetermined region of a ground plane by connector members. Generally, the first body member has a plurality of segments with one end operatively connected by a first connector member to an input/output port, while the second body member has a plurality of segments and with one end operatively connected by a second connector member to a ground plane. Preferably, the input/output port is adjacent to and in a fixed position relative to the ground plane to enable the first connector member to align and support the first body

member. The opposite ends of both the first and second body members includes an arm member which extends toward the ground plane. More specifically, the first and second body members are co-planar with their respective arm members and having roughly the same extension toward the ground plane. Preferably, the second body member comprises two segments which form a predetermined angle with the apex of the angle proximate the first body member. As with the aforementioned first embodiment or form, the first and second body members are spaced from each other by a distance related to the frequency of operation.

In a third embodiment, the first and second body members of the aforementioned second embodiment may be used as a feed system for an auxiliary antenna element, with the auxiliary antenna element comprising a dielectric member and a conductor element. Preferably, the auxiliary antenna element is superposed above and adjacent to the first and second body members of the aforementioned second embodiment. In use, the auxiliary antenna element extends the bandwidth of the first and second body members. In another embodiment, the antenna may be manufactured as a plated or foil conductive material imprinted or disposed upon a dielectric substrate using known printed circuit fabrication techniques. In the third embodiment, the aforementioned body members of the second embodiment of the antenna assembly are used in conjunction with an auxiliary antenna element. Said auxiliary antenna element may be composed of a metallic plate supported by a dielectric substrate which provides the proper spacing to the antenna feed system and the ground plane element which may be the ground plane of the printed wiring board of a communication device.

In a fourth embodiment, a multiple band antenna assembly is provided. In an illustrated embodiment, the antenna assembly includes a plurality of stacked antenna elements, each defined with respect to a different frequency band of operation. Additionally, the stacked antenna elements may be disposed in substantially parallel relationship with each other.

As with all of the embodiments, it will be appreciated that various componentry may be positioned within the open space(s) between the antenna assembly and the ground plane to facilitate compact construction.

It is an object of the present invention to provide an antenna assembly which may be incorporated into a wireless communication device.

Another object of the present invention to enhance operation of an antenna assembly by increasing its operational bandwidth.

A feature of the present invention is that there is a single feed point for multiple electromagnetic frequency ranges or bands.

Another feature of the present invention is that fabrication may be accomplished through existing technologies and mass production techniques.

Yet another feature of the present invention is the provision of a low specific absorption rate (SAR) antenna.

An advantage of the present invention is that the antenna assembly has a low profile which enables it to be used in small articles such as wireless communication devices.

Another advantage of the present invention is that various components of a transceiver device may be positioned within interior regions of the antenna assembly to reduce the overall size of the electronic device.

Yet another advantage of the present invention is that a multiple band antenna may be implemented having a plurality of individual antenna structures, each structure associated with a given frequency band of operation. In one preferred embodiment, the plurality of individual antenna structures may be stacked in a substantially parallel manner.

These and other objects, features and advantages will become apparent in light of the following detailed description of the preferred embodiments in connection with the drawings.

BRIEF DESCRIPTION OF THE DRAWINGS

FIG. **1** is a partial, cross-sectional perspective view of a wireless communication device incorporating an antenna assembly according to the present invention;

FIG. **2** is a plan view of a first embodiment of the antenna assembly according to the present invention taken from the back of a wireless communication device, the wireless communication device depicted in phantom;

FIG. **3**A is an end elevational view of the first embodiment of the antenna assembly of FIG. **2** taken from the top of a wireless communication device, the wireless communication device depicted in phantom;

FIG. **3**B is a edge elevational view of the first embodiment of the antenna assembly of FIG. **2** taken from a side of a wireless communication device, the wireless communication device depicted in phantom;

FIG. **4**A is a partial plan view of the driven and parasitic elements and attendant dielectric element of the first embodiment of the antenna assembly;

FIG. **4**B is a table showing preferred dimensions of the antenna assembly of FIG. **4**A, according to the present invention;

FIG. **5** is a plan view of a second embodiment of the antenna assembly according to the present invention taken from the back of a wireless communication device, the wireless communication device depicted in phantom;

FIG. **6**A is an end elevational view of the second embodiment of the antenna assembly of FIG. **5** taken from the top of a wireless communication device, the wireless communication device depicted in phantom;

FIG. **6**B is a edge elevational view of the second embodiment of the antenna assembly of FIG. **5** taken from a side of a wireless communication device, the wireless communication device depicted in phantom;

FIG. **7**A is an enlarged plan view of the driven and parastic elements and associated ground plane of the second embodiment of the antenna assembly of FIG. **5**;

FIG. **7**B is a table showing preferred dimensions of the antenna assembly of FIG. **7**A, according to the present invention;

FIG. **8** is a plan view of a third embodiment of the antenna assembly according to the present invention taken from the back of a wireless communication device, the wireless communication device depicted in phantom;

FIG. **9**A is an end elevational view of the third embodiment of the antenna assembly of FIG. **8** taken from the top of a wireless communication device, the wireless communication device depicted in phantom;

FIG. **9**B is a edge elevational view of the third embodiment of the antenna assembly of FIG. **2** taken from a side of a wireless communication device, the wireless communication device depicted in phantom;

FIG. **9**C is a table showing preferred dimensions of the antenna assembly of FIG. **9**A, according to the present invention;

FIG. **10** is a side elevational view of another embodiment of the antenna assembly according to the present invention, incorporating a plurality of antenna structures for multiple band operation; and

FIG. **11** is a perspective view of the multiple band antenna assembly of FIG. **10**.

DETAILED DESCRIPTION OF THE PREFERRED EMBODIMENTS

Referring now to the drawings, wherein like numerals depict like parts throughout, FIG. **1** illustrates a wireless communications device (WCD) **10** having a housing **12** with a front **14**, a rear or back **16**, a top **18** a bottom **20** and a printed wiring board (PWB) **22**. A portion of the wireless communications device and the printed wiring board have been broken away to illustrate the juxtaposition of the printed wiring board **22** and the antenna assembly **30**. The antenna assembly **30** of the present invention includes a ground plane **32**, which may be carried by the printed PWB **22**.

A first preferred embodiment of the present invention may be seen in FIGS. **2**–**4**B. Here, the antenna assembly **30** comprises a dielectric element **50** having a major surface **52** in supporting relation to a driven element **54** and a parasitic element **70**. The driven element **54**, illustrated in this embodiment as a trace **54**, includes opposing ends **56**, **58** with one end including a tip **60** and the other end including a feed point **62**. The parasitic element or trace **70** includes first, second and third segments, **72**, **74**, **76** with an end of the second segment **74** including a ground connection point **78**. The driven and parasitic elements or traces **54**, **70** are operatively connected to an RF input/output port **44** and a ground point **46** on the ground plane **32** by first and second connector members **40**, **42**, respectively. Importantly, the overall length of both the driven and parasitic element **54**, **70** is substantially less than ¼λ.

As depicted in FIGS. **3**A and **3**B, the first connector member **40** operatively connects the feed point **62** of the first trace **54** to an input/output port **44**. As mentioned previously, the input/output port **44** is adjacent to and in a fixed position relative to the ground plane **32**. Note, however, that although the input/output port **44** is depicted as being adjacent the ground plane **32** of the printed wiring board **22**, it will be appreciated that the input/output port **44** may be at other locations. For example, within the predetermined region **34** of the ground plane **32**, and preferably at the coordinates defined by distances N and Q (See FIGS. **3**A, **3**B). The second connector member **42** operatively connects the ground connection point **78** to the ground point **46** on the ground plane **32**. Note that the ground point **46** is located within the predetermined region **34** of the ground plane **32** and preferably at the coordinates defined by distances O and P (See also, FIGS. **3**A, **3**B).

The traces themselves **54**, **70** may be manufactured using existing circuit board fabrication technologies, such as metallic deposition or etching, or may even take the form of foil which is secured to a suitable substrate. Preferably, the first trace **54** is generally linear and includes ends **56**, **58** one of which includes a tip **60**, the other of which includes a feed point **62**. The second trace **70** includes first, second, and third segments **72**, **74** and **76** with the second segment **74** including a ground connection point **78**. While the preferred embodiment may be constructed according to the dimensions listed in Table **1** depicted in FIG. **4**B, it will be appreciated that variations are possible. The distance between the confronting edges of the first and second traces **54**, **70** is dependent upon the frequency of operation.

Turning to FIGS. **5**–**7**B, a second preferred embodiment of the present invention the antenna assembly **30** comprises a plurality of body members **80**, **90** which are operatively connected to an input/output port **44** and a ground point **46** on the ground plane **32** by first and second connector members **40**, **42**, respectively. Unlike the traces of the first embodiment, it will be appreciated that the body members **80**, **90** do not require a substrate in supporting relation thereto. Rather, the first and second body members **80**, **90** are supported by connector members **40**, **42**. The first connector member **40** operatively connects the first body member **80** to an input/output port **44** which, as explained previously, is in a fixed position relative to the ground plane **32**. As with the aforementioned first embodiment, it will be appreciated that the input/output port **44** may be at other locations.

In a departure from the trace of the first embodiment, the body member **80** includes an arm member **82** which extends toward the ground plane **32** rather that extending from the first body member **80** in a co-planar direction (See FIGS. **6**A and **6**B). The resultant structure of the first body member **80**, the connector member **40** and the arm member **82** is in the general shape of an inverted u-shaped hook. The second connector member **42** operatively connects the second body member **90** to a ground point **46** on the ground plane **32** as in the aforementioned first embodiment. Also in a departure from the trace of the first embodiment, the second body member **90** includes a first body segment **92** and a second body segment **94** which are co-planar and arranged to form an angle with an apex. Similar to the first body member **80**, the second body member **90** includes an arm member **96** which extends from the end of body segment **94** towards the ground plane **32** (See also FIGS. **6**A and **6**B). The resultant structure of the second body member **90**, the arm member **96** and the connector member **42** is also in the general shape of an inverted u-shaped hook. As with the aforementioned first embodiment, the driven element **80** and parasitic element **90** are superposed over a predetermined region **34** of the ground plane **32**.

While the preferred embodiment may be constructed according to the dimensions listed in Table **2** depicted in FIG. **7**B, it will be appreciated that variations are possible. In this embodiment, the antenna was specified for operation across the UMTS band

In a third preferred embodiment, the aforementioned body members of the second embodiment of the antenna assembly **30** are used as a feed structure with an auxiliary antenna element **100**. More specifically, as depicted in FIGS. **8**–**9**B, the first and second body members **80**, **90** are in supporting relation to the auxiliary antenna element **100** which includes a dielectric member **102** and a conductor element **104**. In use, the first and second body members **80**, **90** serve as a feed system for the auxiliary antenna element **100** resulting in an ultra-wide operational bandwidth auxiliary antenna. Preferably, the auxiliary antenna element **100** has dimensions of approximately 0.1λ×0.1λ, where λ is the wavelength of the lowest frequency. As an example, an antenna is disclosed for operation across a bandwidth of 1710–2500 MHz. Correspondingly, the ground plane **32** has dimensions of approximately 0.45λ×0.25λ, also where λ is the wavelength of the lowest frequency (1710 MHz) in the bandwidth of 1710–2500 MHz. Preferably, as with the other aforementioned embodiments, the auxiliary antenna element **100** is superposed over a predetermined region **34** of the ground plane **32**. While the preferred embodiment may be constructed according to the dimensions listed in Table **2** depicted in FIG. **7**B, it will be appreciated that variations are

possible. This particular preferred embodiment operates over a frequency of 1710–2500 MHz with a voltage standing wave ratio (VSWR)<3:1. Additional embodiments may include a dielectric substrate having patterned conductive layers or foils disposed upon its surfaces. In yet other embodiments, the antenna may be manufactured as printed circuit board elements, bent metal structures, conductive coatings or foils disposed upon a dielectric, etc. as obvious to one skilled in the art. Additionally, other frequency bands of operation may be practicable by scaling the dimensions of the elements as presented herein.

In a fourth embodiment as illustrated in FIGS. **10** and **11**, an antenna assembly for multiple band operation can be achieved with a plurality of antenna components, **34'**, **34"**, **34'"**. The antenna can be configured to provide multi-band operation using a single RF Feed line **40'**, by stacking antenna assemblies in substantially co-parallel configuration. Each stacked assembly **34** is composed of driven and parasitic conductive elements **80**, **90** disposed upon a dielectric substrate, with feed and ground point connections **40'**, **42** for each stacked assembly. A single feed line **40'** and single ground connector **42'** may be used to access each of the stacked layers sequentially. The size of each layer is scaled for the appropriate frequency and stacked at a height determined by the desired frequency band of operation. The stacked driven and parasitic elements may share common vertical elements for physical support, for feed line and grounding line. The spacings between stacked assemblies and the ground plane are determined by the frequency desired, as could be determined by one skilled in the art. The smallest of the stacked assemblies having the corresponding smallest sized driven and parasitic elements, would provide the highest frequency band, and is placed closest to the ground plane. Larger scaled stacked assemblies, with corresponding lower frequency bands, would need to be arranged farther from the ground plane for proper performance. As an example, such an antenna could be configured to cover the U.S. cell band (824–894) MHz, PCS/DCS bands (1710–1990) MHz and Bluetooth frequency band (2.4–2.5) GHz.

Additional advantages and modifications will readily occur to those skilled in the art. The invention in its broader aspects is, therefore, not limited to the specific details, representative apparatus and illustrative examples shown and described. Accordingly, departures from such details may be made without departing from the spirit or scope of the applicant's general inventive concept.

What is claimed:

1. An antenna assembly for use in a wireless communication device having a ground plane and an input/output RF connector, said antenna assembly for transmitting and receiving about a predetermined wavelength, said antenna assembly comprising:

a driven element having a predetermined configuration, said driven element being disposed away from the ground plane and having a length of substantially less than one-quarter of the predetermined wavelength, said driven element coupled to the RF connector proximate to a first end; and

a parasitic element having a predetermined configuration, said parasitic element being disposed away from the ground plane and having a length of substantially less than one-quarter of the predetermined wavelength, with the parasitic element being spaced from the driven element a predetermined distance, said parasitic element being coupled to the ground plane of the wireless communication device, wherein the driven element and the parasitic element are substantially co-planar, and wherein the driven element has a generally linear configuration and the parasitic element has a generally nonlinear configuration, said parasitic element having a plurality of disjointed nonparallel sections.

2. The antenna assembly of claim **1**, wherein the driven element and parasitic element are spaced a predetermined distance away from the ground plane.

3. The antenna assembly of claim **2**, wherein the driven element and parasitic element are substantially collateral with the ground plane.

4. The antenna assembly of claim **3**, wherein the driven element and parasitic element are superposed over a predetermined region of the ground plane.

5. The antenna assembly of claim **1**, further including a generally planar dielectric element in supporting relation to the driven element.

6. The antenna assembly of claim **1**, further including a dielectric element in supporting relation to the parasitic element.

7. The antenna assembly of claim **1**, further including a dielectric element in supporting relation to the driven element and parasitic element.

8. The antenna assembly of claim **7**, wherein the dielectric element is spaced a predetermined distance away from the ground plane.

9. The antenna assembly of claim **1**, wherein the driven element and parasitic element are selected from among the group including: solid wire elements, plated metal elements, metal foil elements, and sheet metal elements.

10. An antenna assembly for use in a wireless communication device having a ground plane and an input/output RF connector, said antenna assembly for transmitting and receiving about a predetermined wavelength, said antenna assembly comprising:

a driven element having a predetermined configuration, said driven element being disposed away from the ground plane and having a length of substantially less than one-quarter of the predetermined wavelength, said driven element coupled to the RF connector proximate to a first end; and

a parasitic element having a predetermined configuration, said parasitic element being disposed away from the ground plane and having a length of substantially less than one-quarter of the predetermined wavelength, with the parasitic element being spaced from the driven element a predetermined distance, said parasitic element being coupled to the ground plane of the wireless communication device, wherein the driven element and the parasitic element are first and second generally planar conductive traces disposed upon a generally planar dielectric substrate element.

11. The antenna assembly of claim **10**, wherein the first conductive trace includes a substantially linear conductor portion and wherein the second conductive trace includes at least two nonparallel substantially linear conductor portions.

12. The antenna assembly of claim **11**, wherein the first conductive trace and the second conductive trace are superposed over a predetermined region of the ground plane.

13. The antenna assembly of claim **10**, wherein the first conductive trace has a predetermined surface area and wherein the second conductive trace has a predetermined surface area which is substantially larger than the surface area of the first conductive trace.

14. An antenna assembly for use in a wireless communication device having a ground plane and an input/output RF connector, said antenna assembly for transmitting and

receiving about a predetermined wavelength, said antenna assembly comprising:

a driven element having a predetermined configuration, said driven element being disposed away from the ground plane and having a length of substantially less than one-quarter of the predetermined wavelength, said driven element coupled to the RF connector proximate to a first end; and

a parasitic element having a predetermined configuration, said parasitic element being disposed away from the ground plane and having a length of substantially less than one-quarter of the predetermined wavelength, with the parasitic element being spaced from the driven element a predetermined distance, said parasitic element being coupled to the ground plane of the wireless communication device, wherein the driven element includes a body member and an arm member downwardly extending toward the ground plane at an end opposite the first end.

15. The antenna assembly of claim **14**, wherein the parasitic element includes a first body member, a second body member and an arm member downwardly extending toward the ground plane at an end opposite the first end.

16. The antenna assembly of claim **15**, wherein a portion of the body member of the driven element and the first and second body members of the parasitic element are co-planar.

17. The antenna assembly of claim **16**, further comprising a dielectric member having a conductor element.

18. The antenna assembly of claim **17**, wherein the dielectric member is adjacent the driven element and the parasitic element.

19. The antenna assembly of claim **17**, wherein the dielectric member is in contacting relation to the body member of the driven element and the first and second body members of the parasitic element.

20. The antenna assembly of claim **15**, wherein the body member of the driven element and the first body member of the parasitic element are superposed over a predetermined region of the ground plane.

21. A bandwidth enhanced antenna assembly for use in a wireless communication device having a ground plane and an input/output RF connector, said antenna assembly for transmitting and receiving about a predetermined wavelength, said antenna assembly comprising:

a driven element being disposed away from the ground plane and having a length of substantially less than one-quarter of the predetermined wavelength, said driven element coupled to the RF connector proximate to a first end; and

a parasitic element, said parasitic element being disposed away from the ground plane and having a length of substantially less than one-quarter of the predetermined wavelength, with the parasitic element spaced from the driven element a predetermined distance, said parasitic element being coupled to the ground plane of the wireless communication device, wherein said driven element in combination with the parasitic element provide an enhanced operational bandwidth, wherein the driven element and the parasitic element are substantially co-planar, and wherein the driven element has a generally linear configuration and the parasitic element has a generally nonlinear configuration, said parasitic element having a plurality of disjointed nonparallel sections.

22. The antenna assembly of claim **21**, wherein the driven element and parasitic element are spaced a predetermined distance away from the ground plane.

23. The antenna assembly of claim **22**, wherein the driven element and parasitic element are substantially collateral with the ground plane.

24. The antenna assembly of claim **23**, wherein the driven element and parasitic element are superposed over a predetermined region of the ground plane.

25. The antenna assembly of claim **21**, further including a dielectric element in supporting relation to the driven element and parasitic element.

26. The antenna assembly of claim **21**, wherein the driven element and parasitic element are selected from among the group including: solid wire elements, plated metal elements, metal foil elements, and sheet metal elements.

27. A bandwidth enhanced antenna assembly for use in a wireless communication device having a ground plane and an input/output RF connector, said antenna assembly for transmitting and receiving about a predetermined wavelength, said antenna assembly comprising:

a driven element being disposed away from the ground plane and having a length of substantially less than one-quarter of the predetermined wavelength, said driven element coupled to the RF connector proximate to a first end; and

a parasitic element, said parasitic element being disposed away from the ground plane and having a length of substantially less than one-quarter of the predetermined wavelength, with the parasitic element spaced from the driven element a predetermined distance, said parasitic element being coupled to the ground plane of the wireless communication device, wherein said driven element in combination with the parasitic element provide an enhanced operational bandwidth, and wherein the driven element and the parasitic element are first and second generally planar conductive traces disposed upon a generally planar dielectric substrate element.

28. The antenna assembly of claim **27**, wherein the first conductive trace includes a substantially linear conductor portion and wherein the second conductive trace includes at least two nonparallel substantially linear conductor portions.

29. A bandwidth enhanced antenna assembly for use in a wireless communication device having a ground plane and an input/output RF connector, said antenna assembly for transmitting and receiving about a predetermined wavelength, said antenna assembly comprising:

a driven element being disposed away from the ground plane and having a length of substantially less than one-quarter of the predetermined wavelength, said driven element coupled to the RF connector proximate to a first end; and

a parasitic element, said parasitic element being disposed away from the ground plane and having a length of substantially less than one-quarter of the predetermined wavelength, with the parasitic element spaced from the driven element a predetermined distance, said parasitic element being coupled to the ground plane of the wireless communication device, wherein said driven element in combination with the parasitic element provide an enhanced operational bandwidth, and wherein the driven element includes a body member and an arm member downwardly extending toward the ground plane at an end opposite the first end.

30. The antenna assembly of claim **29**, wherein the parasitic element includes a first body member, a second body member and an arm member downwardly extending toward the ground plane at an end opposite the first end.

31. The antenna assembly of claim **30**, wherein a portion of the body member of the driven element and the first and second body members of the parasitic element are co-planar.

32. The antenna assembly of claim 30, wherein the body member of the driven element and the first body member of the parasitic element are superposed over a predetermined region of the ground plane.

33. An aperture-coupled bandwidth enhanced antenna assembly for use in a wireless communication device having a ground plane and an input/output RF connector, said antenna assembly for transmitting and receiving about a predetermined wavelength, said antenna assembly comprising:

a driven element being disposed away from the ground plane and having a length of substantially less than one-quarter of the predetermined wavelength, said driven element coupled to the RF connector;

a parasitic element, said parasitic element being disposed away from the ground plane and having a length of substantially less than one-quarter of the predetermined wavelength, with the parasitic element spaced from the driven element a predetermined distance, said parasitic element being coupled to the ground plane of the wireless communication device; and

an auxiliary antenna element including a dielectric substrate element disposed relative a portion of both the driven element and the parasitic element and a conductive element disposed upon the dielectric substrate at an upper surface, wherein said driven element in combination with the auxiliary antenna element provide an enhanced operational bandwidth.

34. The antenna assembly of claim 33, wherein the driven element and parasitic element are substantially co-planar.

35. The antenna assembly of claim 34, wherein the dielectric substrate element is substantially planar.

36. The antenna assembly of claim 34, wherein the driven element and the parasitic element are each in contacting relationship with the dielectric substrate element.

37. The antenna assembly of claim 33, wherein the driven element and parasitic element are spaced a predetermined distance away from the ground plane.

38. The antenna assembly of claim 37, wherein the driven element and parasitic element are substantially collateral with the ground plane.

39. The antenna assembly of claim 38, wherein the driven element and parasitic element are superposed over a predetermined region of the ground plane.

40. The antenna assembly of claim 33, further including a dielectric element in supporting relation to the driven element and parasitic element.

41. The antenna assembly of claim 33 wherein the driven element and parasitic element are first and second conductive traces, respectively.

42. The antenna assembly of claim 41, wherein the first trace includes a substantially linear conductor portion and wherein the second trace includes at least two substantially linear conductor portions.

43. The antenna assembly of claim 33, wherein the driven element includes a body member and an arm member.

44. The antenna assembly of claim 43, wherein the parasitic element includes a first body member, a second body member and an arm member.

45. The antenna assembly of claim 44, wherein the arm members of the driven element and parasitic element extend towards the ground plane.

46. The antenna assembly of claim 44, wherein the driven element and parasitic element are selected from among the group including: solid wire elements, plated metal elements, metal foil elements, and sheet metal elements.

47. The antenna assembly of claim 44, wherein a portion of the body member of the driven element and the first and second body members of the parasitic element are co-planar.

48. The antenna assembly of claim 44, wherein the body member of the driven element and the first body member of the parasitic element are superposed over a predetermined region of the ground plane.

49. A multiple bandwidth antenna assembly for use in a wireless communication device having a ground plane and an input/output RF connector, said antenna assembly for transmitting and receiving about a plurality of predetermined wavelengths, said antenna assembly comprising:

a plurality of driven elements each being disposed away from the ground plane by a predetermined different distance and each having a length of substantially less than one-quarter of one of the plurality of predetermined wavelengths, each of said plurality of driven elements coupled to the RF connector; and

a plurality of parasitic elements each being disposed away from the ground plane by a predetermined different distance and each having a length of substantially less than one-quarter of one of the plurality of predetermined wavelengths, each of said plurality of parasitic elements spaced from an associated one of the plurality of driven elements, each of said plurality of parasitic elements being coupled to the ground plane of the wireless communication device wherein associated pairs of driven elements and parasitic elements are substantially co-planar.

50. The antenna assembly of claim 49, further including a plurality of dielectric elements in supporting relation to associated pairs of driven elements and parasitic elements.

51. The antenna assembly of claim 49 wherein the plurality of driven elements and parasitic elements are selected from among the group including conductive traces, conductive wires, plated metal elements, foil metal elements, and sheet metal elements.

52. A multiple bandwidth antenna assembly for use in a wireless communication device having a ground plane and an input/output RF connector, said antenna assembly for transmitting and receiving about a plurality of predetermined wavelengths, said antenna assembly comprising:

a plurality of driven elements each being disposed away from the ground plane by a predetermined different distance and each having a length of substantially less than one-quarter of one of the plurality of predetermined wavelengths, each of said plurality of driven elements coupled to the RF connector through a first common vertical conductor element; and

a plurality of parasitic elements each being disposed away from the ground plane by a predetermined different distance and each having a length of substantially less than one-quarter of one of the plurality of predetermined wavelengths, each of said plurality of parasitic elements spaced from an associated one of the plurality of driven elements, each of said plurality of parasitic elements being coupled to the ground plane of the wireless communication device through a second common vertical conductor element.

53. A multiple bandwidth antenna assembly of claim 52 wherein associated pairs of driven elements and parasitic elements are substantially co-planar.

* * * * *