US007904581B2

(12) **United States Patent**
Sherer et al.

(10) **Patent No.: US 7,904,581 B2**
(45) **Date of Patent: Mar. 8, 2011**

(54) **FAST CHANNEL CHANGE WITH CONDITIONAL RETURN TO MULTICASTING**

(75) Inventors: **W. Paul Sherer**, Danville, CA (US); **Kirk Blattman**, San Ramon, CA (US); **Glenn Connery**, Petaluma, CA (US); **Andrew Palfreyman**, San Jose, CA (US); **John Pickens**, Newark, CA (US)

(73) Assignee: **Cisco Technology, Inc.**, San Jose, CA (US)

(*) Notice: Subject to any disclaimer, the term of this patent is extended or adjusted under 35 U.S.C. 154(b) by 954 days.

(21) Appl. No.: **11/360,078**

(22) Filed: **Feb. 23, 2006**

(65) **Prior Publication Data**

US 2007/0107026 A1 May 10, 2007

Related U.S. Application Data

(60) Provisional application No. 60/655,328, filed on Feb. 23, 2005, provisional application No. 60/719,146, filed on Sep. 21, 2005.

(51) **Int. Cl.**
H04N 7/173 (2006.01)

(52) **U.S. Cl.** **709/231**; 725/97; 725/101; 725/104; 725/86; 370/352; 370/389; 370/392

(58) **Field of Classification Search** 709/231, 709/230

See application file for complete search history.

(56) **References Cited**

U.S. PATENT DOCUMENTS

2,510,397	A	6/1950	Hansell
2,915,652	A	12/1959	Hatsopoulos
3,021,472	A	2/1962	Hernqvist
3,118,107	A	1/1964	Gabor
3,169,200	A	2/1965	Huffman
3,173,032	A	3/1965	Maynard
3,194,989	A	7/1965	Garbuny
3,238,395	A	3/1966	Sense
3,239,745	A	3/1966	Hernqvist
3,267,307	A	8/1966	Fox
3,267,308	A	8/1966	Hernqvist
3,281,372	A	10/1966	Haas
3,300,660	A	1/1967	Bensimon

(Continued)

FOREIGN PATENT DOCUMENTS

DE 4025618 A1 2/1992

(Continued)

OTHER PUBLICATIONS

Fitzpatrick, Gary et al., "Demonstration of Close-Spaced Thermionic Converters", Proceedings of the 28th Intersociety Energy Conversion Engineering Conference, May 1993, pp. 1.573-1.580, vol. 1, American Chemical Society, Washington, DC, USA.

(Continued)

Primary Examiner — Wing F Chan
Assistant Examiner — Andrew Woo

(57) **ABSTRACT**

In a digital video network that is capable of distributing digital video content to a client via multicasting and unicasting, servicing a channel change request from a client involves switching from providing the digital video content to the client via multicasting to providing the digital video content to the client via unicasting and continuing to provide digital video content to the client via unicasting until a pre-established condition is met. Continuing to provide digital video content to the client via unicasting until a pre-established condition is met allows the network to opportunistically switch the client from unicasting back to multicasting.

26 Claims, 14 Drawing Sheets

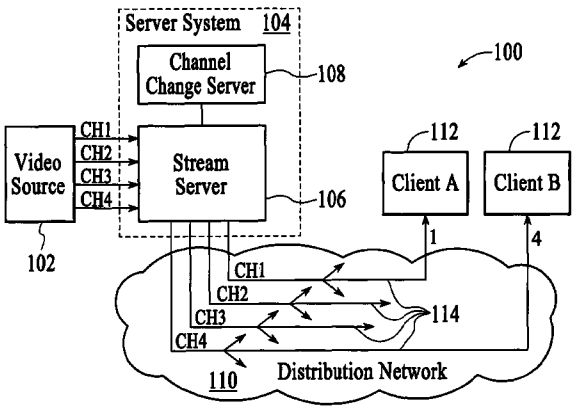

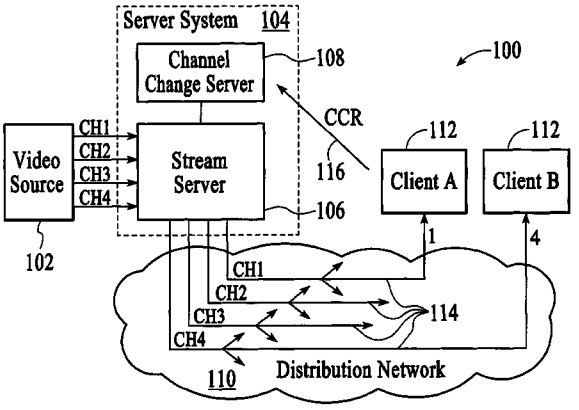

U.S. PATENT DOCUMENTS

3,328,611 A 6/1967 Davis
3,376,437 A 4/1968 Meyerand, Jr.
3,393,330 A 7/1968 Vary
3,470,393 A 9/1969 Moncorge
3,515,908 A 6/1970 Caldwell
3,519,854 A 7/1970 Davis
3,578,992 A 5/1971 Shimada
3,600,933 A 8/1971 Johnston
3,740,592 A 6/1973 Engdahl et al.
3,821,462 A 6/1974 Kaufman et al.
3,843,896 A 10/1974 Rason et al.
3,992,885 A 11/1976 Forster
4,004,210 A 1/1977 Yater
4,011,582 A 3/1977 Cline et al.
4,039,352 A 8/1977 Marinescu
4,063,965 A 12/1977 Cline et al.
4,097,752 A 6/1978 Wolf et al.
4,148,192 A 4/1979 Cummings
4,188,571 A 2/1980 Brunson
4,199,713 A 4/1980 Förster
4,224,461 A 9/1980 Snyder, Jr. et al.
4,281,280 A 7/1981 Richards
4,373,142 A 2/1983 Morris
4,410,951 A 10/1983 Nakamura
4,423,347 A 12/1983 Kleinschmidt
4,667,126 A 5/1987 Fitzpatrick
4,880,975 A 11/1989 Nishioka et al.
4,928,030 A 5/1990 Culp
4,937,489 A 6/1990 Hattori
4,958,201 A 9/1990 Mimura
5,028,835 A 7/1991 Fitzpatrick
5,049,775 A 9/1991 Smits
5,068,535 A 11/1991 Rabalais
5,083,056 A 1/1992 Kondou
5,119,151 A 6/1992 Onda
5,229,320 A 7/1993 Ugajin
5,233,205 A 8/1993 Usagawa
5,235,803 A 8/1993 Rodgers
5,247,223 A 9/1993 Mori
5,307,311 A 4/1994 Sliwa, Jr.
5,309,056 A 5/1994 Culp
5,323,737 A 6/1994 Farrell
5,327,038 A 7/1994 Culp
5,332,952 A 7/1994 Ugajin
5,336,547 A 8/1994 Kawakita et al.
5,351,412 A 10/1994 Furuhata
5,356,484 A 10/1994 Yater
5,371,388 A 12/1994 Oda
5,399,930 A 3/1995 Culp
5,410,166 A 4/1995 Kennel
5,465,021 A 11/1995 Visscher
5,487,790 A 1/1996 Yasuda
5,503,963 A 4/1996 Bifano
5,521,735 A 5/1996 Shimizu
5,592,042 A 1/1997 Takuchi
5,625,245 A 4/1997 Bass
5,675,972 A 10/1997 Edelson
5,699,668 A 12/1997 Cox
5,699,772 A 12/1997 Yonekawa et al.
5,701,043 A 12/1997 Razzaghi
5,722,242 A 3/1998 Edelson
5,810,980 A 9/1998 Edelson
5,874,039 A 2/1999 Edelson
5,892,767 A 4/1999 Bell et al.
5,917,156 A 6/1999 Nobori et al.
5,973,259 A 10/1999 Edelson
5,981,071 A 11/1999 Cox
5,981,866 A 11/1999 Edelson
5,994,638 A 11/1999 Edelson
6,054,837 A 4/2000 Edelson
6,064,137 A 5/2000 Cox
6,084,173 A 7/2000 DiMatteo
6,089,311 A 7/2000 Edelson
6,117,344 A 9/2000 Cox et al.
6,166,317 A 12/2000 Volk, Jr.
6,175,217 B1 1/2001 Da Ponte et al.
6,192,687 B1 2/2001 Pinkerton et al.
6,214,651 B1 4/2001 Cox
6,225,205 B1 5/2001 Kinoshita
6,229,083 B1 5/2001 Edelson
6,232,546 B1 5/2001 DiMatteo et al.
6,271,614 B1 8/2001 Arnold
6,272,873 B1 8/2001 Bass
6,281,514 B1 8/2001 Tavkhelidze
6,314,466 B1 11/2001 Agarwal et al.
6,339,785 B1 1/2002 Feigenbaum
6,417,060 B2 7/2002 Tavkhelidze et al.
6,489,704 B1 12/2002 Kucherov et al.
6,493,876 B1 * 12/2002 DeFreese et al. 725/100
6,535,909 B1 3/2003 Rust
6,651,105 B1 11/2003 Bhagwat et al.
6,651,760 B2 11/2003 Cox et al.
6,691,312 B1 2/2004 Sen et al.
6,711,741 B2 3/2004 Yeo
6,720,704 B1 4/2004 Tavkhelidze et al.
6,731,625 B1 * 5/2004 Eastep et al. 370/352
6,774,003 B2 8/2004 Tavkhelidze et al.
6,845,398 B1 1/2005 Galensky et al.
6,869,855 B1 3/2005 Tavkhelidze et al.
7,107,351 B2 9/2006 Baumeister et al.
7,523,482 B2 4/2009 Barrett et al.
7,549,160 B1 6/2009 Podar et al.
2001/0046749 A1 11/2001 Tavkhelidze et al.
2002/0114465 A1 8/2002 Shen-Orr et al.
2002/0126755 A1 * 9/2002 Li et al. 375/240.12
2002/0170172 A1 11/2002 Tavkhelidze et al.
2003/0042819 A1 3/2003 Martinovsky et al.
2003/0068431 A1 4/2003 Taliashvili et al.
2003/0074667 A1 4/2003 Cheung et al.
2003/0093802 A1 5/2003 Cho et al.
2003/0093803 A1 5/2003 Ishikawa et al.
2003/0152815 A1 8/2003 LaFollette et al.
2004/0029341 A1 2/2004 Cox et al.
2004/0195934 A1 10/2004 Tanielian
2005/0008240 A1 * 1/2005 Banerji et al. 382/238
2005/0081244 A1 * 4/2005 Barrett et al. 725/97
2005/0226272 A1 10/2005 Luby et al.
2005/0257106 A1 11/2005 Luby et al.
2006/0029065 A1 2/2006 Fellman
2006/0159117 A1 7/2006 Furlong et al.
2006/0187950 A1 8/2006 Bou-Diab et al.
2006/0215593 A1 9/2006 Wang et al.
2006/0279437 A1 12/2006 Luby et al.
2007/0157221 A1 7/2007 Ou et al.
2008/0141097 A1 6/2008 Vayanos et al.
2008/0151805 A1 6/2008 Vayanos et al.
2008/0205640 A1 8/2008 Shen-Orr et al.
2009/0064242 A1 3/2009 Cohen et al.
2009/0100473 A1 4/2009 Segel

FOREIGN PATENT DOCUMENTS

JP 07322659 A 12/1995
JP 10-238406 8/1998
WO WO-97/02460 A1 1/1997
WO WO-99/10974 A1 3/1999
WO WO-99/13562 A1 3/1999
WO WO-99/40628 A1 8/1999
WO 02/49359 A1 6/2002
WO WO 0249359 A1 * 6/2002
WO WO-03/021758 A2 3/2003
WO WO-03/083177 A3 10/2003
WO WO-03/090245 A1 10/2003

OTHER PUBLICATIONS

Fitzpatrick, Gary O. et al., "Close-Spaced Thermionic Converters with Active Spacing Control and Heat-Pipe. Isothermal Emitters", Proceedings of the 31st Intersociety Energy Conversion Engineering Conference, Aug. 11, 1996, pp. 920-927, vol. 2, IEEE, USA.

Fitzpatrick, Gary O. et al., "Updated perspective on the potential for thermionic conversion to meet 21st century energy needs", IECEC '97, Proceedings of the 32nd Intersociety Energy Conversion Engineering Conference, Energy Systems, Renewable Energy Resources, Environmental Impact and Policy Impacts on Energy, Jul. 27, 1997, pp. 1045-1051, vol. 2, IEEE, USA.

Fukuda, Ryuzo et al., "Development of the Oxygenated Thermionic Energy Converters Utilizing the Sputtered Metal Oxides as a Collec-

tor", Space Technology and Applications International Forum—1999, AIP Conference Proceedings, Subseries: Astronomy and Astrophysics, Jan. 22, 1999, pp. 1444-1451, vol. 458, American Institute of Physics, USA.
Hatsopoulos, George N. et al., "Thermionic Energy Conversion—vol. I: Process and Devices", Mar. 15, 1974, p. 222, The MIT Press, USA.
Houston. J.M., "Theoretical Efficiency of the Thermionic Energy Converter", Journal of Applied Physics, Sep. 17, 1959, pp. 481-487, vol. 30, No. 4, American Institute of Physics, New York.
Huffman, Fred N. et al., "Preliminary Investigation of a Thermotunnel Converter", 1988 IECEC; Proceedings of the Twenty-third Intersociety Energy Conversion Engineering Conference, Aug. 1988, pp. 573-579, vol. 1, American Society of Mechanical Engineers, New York.
Kalandarishvili, Arnold G., "The basics of the technology of creating a small interelectrode spacing in thermionic energy converters with the use of two-phase systems", IECEC '97, Proceedings of the 32nd Intersociety Energy Conversion Engineering Conference, Energy Systems, Renewable Energy Resources, Environmental Impact and Policy Impacts on Energy, Jul. 27, 1997, pp. 1052-1056, vol. 2, IEEE, USA.
King, Donald B. et al., "Results from the Microminiature Thermionic Converter Demonstration Testing Program", Space Technology and Applications International Forum—1999, Jan. 22, 1999, pp. 1432-1436, vol. 458, American Institute of Physics, USA.
Mahan, G.D., "Thermionic Refrigeration", Journal of Applied Physics, Oct. 1, 1994, pp. 4362-4366, vol. 76, Issue 7, American Institute of Physics, USA.
Shakouri, Ali et al., "Enhanced Thermionic Emission Cooling in High Barrier Superlattice Hetero- structures", Materials Research Society Symposium Proceedings, Mar. 1999, pp. 449-458, vol. 545, Materials Research Society, Warrendale, Pennsylvania.
Svensson, Robert et al., "TEC as Electric Generator in an Automobile Catalytic Converter", Proceedings of the 31st Intersociety Energy Conversion Engineering Conference, Aug. 1996, pp. 941-944, vol. 2, IEEE, USA.
Zeng, Taofang et al., "Hot Electron Effects on Thermionic Emission Cooling in Heterostructures", Materials Research Society Symposium Proceedings, Mar. 1999, pp. 467-472, vol. 545, Materials Research Society, Warrendale, Pennsylvania.
Abstract of SU 861916 B, Burmistrov, Sep. 10, 1981, "Electrohydrodynamic heat pipe—has needle electrodes situated on wall in condensation zone".
Abstract of JP 404080964 A, Ando, Mar. 13, 1992, "Semiconductor device".
Non-Final Office Action for U.S. Appl. No. 11/360,080, 16 pages (May 26, 2009).
Non-Final Office Action for U.S. Appl. No. 11/361,303, 8 pages (Jun. 23, 2009).
International Search Report for International Application No. PCT/US2006/006446, 3 pages (Apr. 10, 2007).
Written Opinion of the International Search Authority for International Application No. PCT/US2006/006446, 3 pages (Apr. 10, 2007).
Non-Final Office Action for U.S. Appl. No. 11/673,484, 12 pages (Apr. 9, 2009).
International Search Report for International Application No. PCT/US2007/061957, 3 pages (Feb. 14, 2008).
Written Opinion of the International Search Authority for International Application No. PCT/US2007/061957, 4 pages (Feb. 14, 2008).
Office action for Arroyo Video Solutions, Fast Channel Change with Conditional Return to Multicasting, from Canadian Intellectual Property Office, Nov. 3, 2009, Application No. 2,597,836.

* cited by examiner

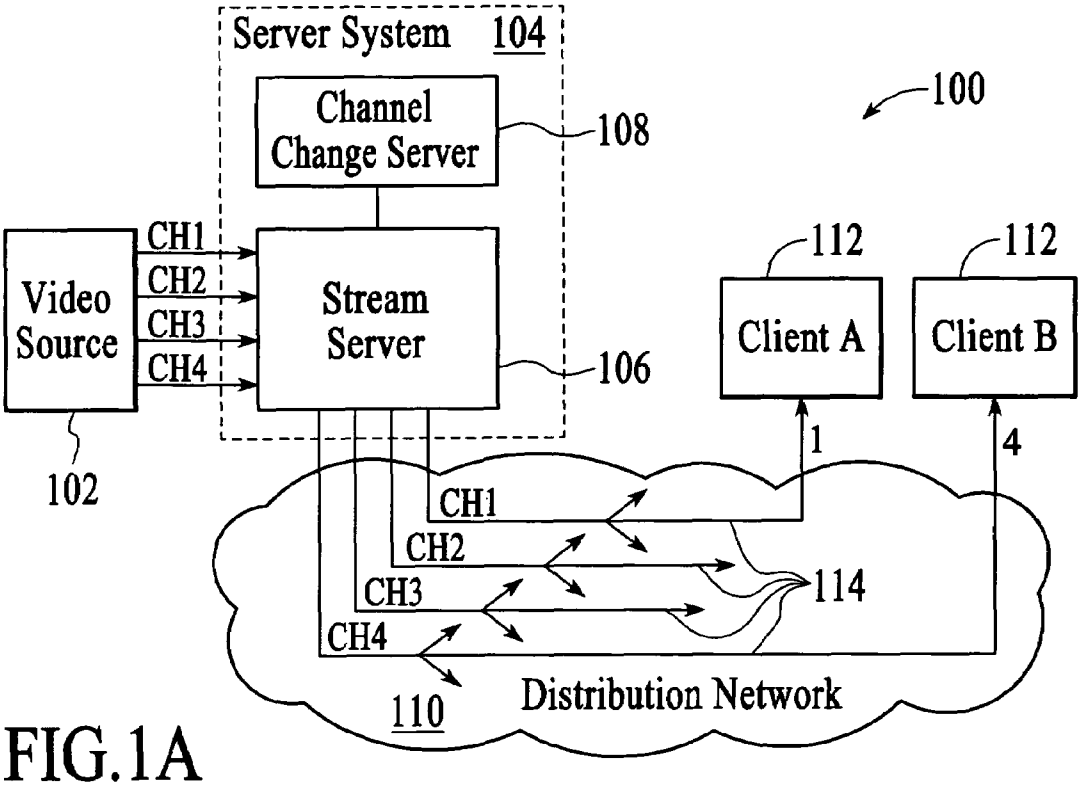
Server System 104
Channel Change Server
108
100
Video Source
CH1
CH2
CH3
CH4
Stream Server
106
112
Client A
112
Client B
102
1
4
CH1
CH2
CH3
CH4
114
110
Distribution Network

FIG.1A

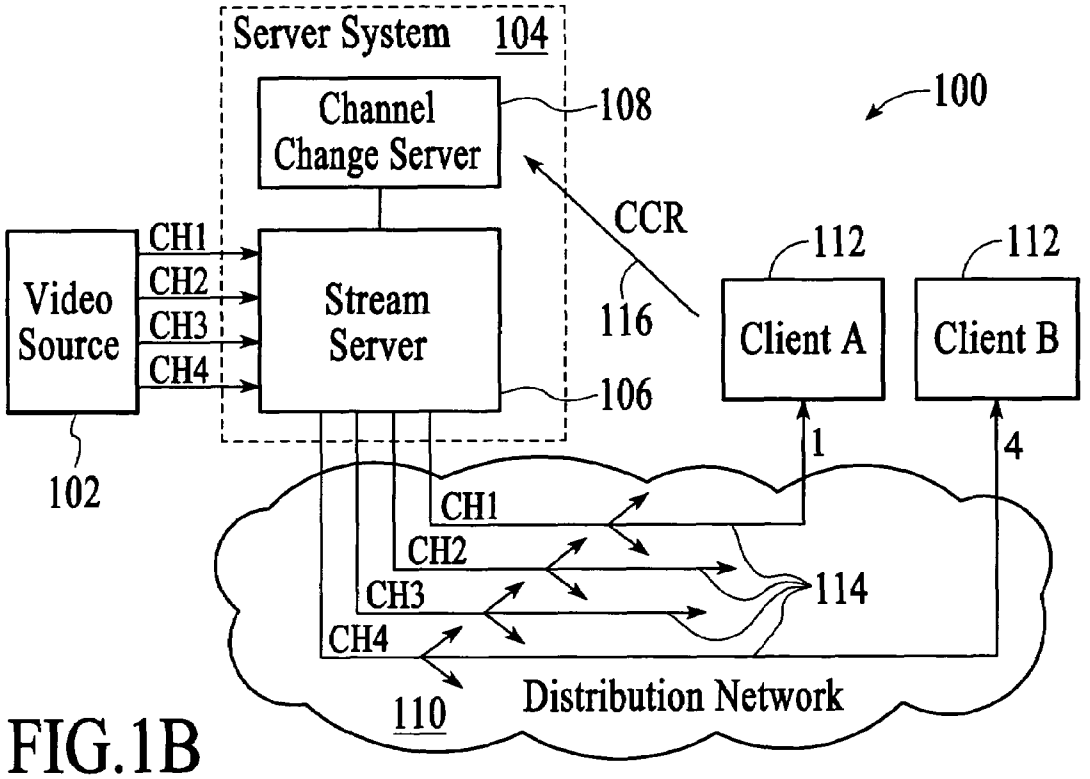
Server System 104
Channel Change Server
108
100
CCR
116
Video Source
CH1
CH2
CH3
CH4
Stream Server
106
112
Client A
112
Client B
102
1
4
CH1
CH2
CH3
CH4
114
110
Distribution Network

FIG.1B

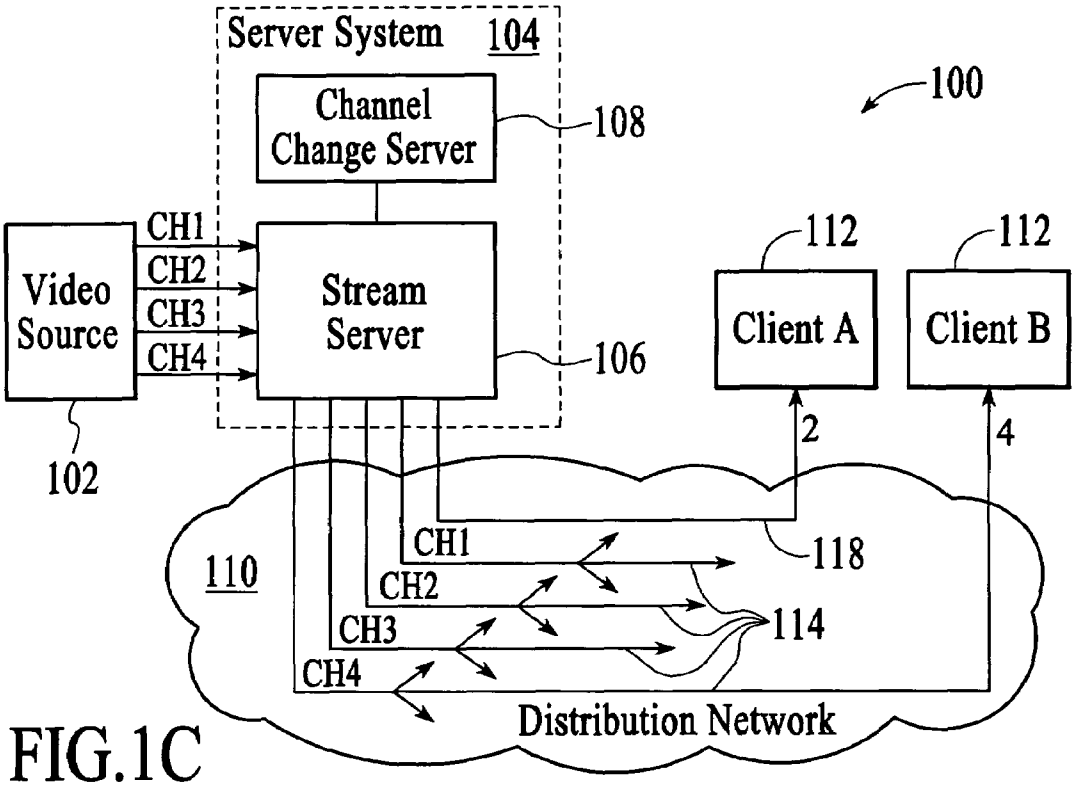
Server System 104
Channel Change Server
108
100
Video Source
CH1
CH2
CH3
CH4
Stream Server
106
112
Client A
112
Client B
2
4
102
110
CH1
CH2
CH3
CH4
118
114
Distribution Network

FIG.1C

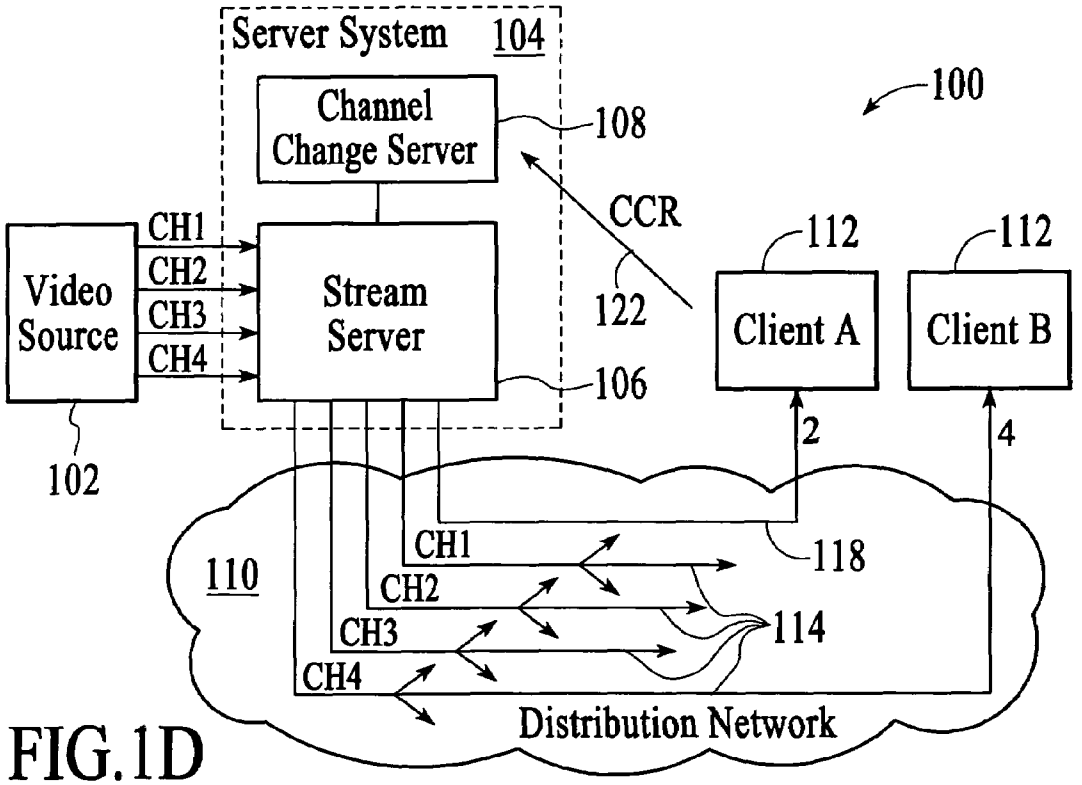
Server System 104
Channel Change Server
108
100
CCR
122
Video Source
CH1
CH2
CH3
CH4
Stream Server
106
112
Client A
112
Client B
2
4
102
110
CH1
CH2
CH3
CH4
118
114
Distribution Network

FIG.1D

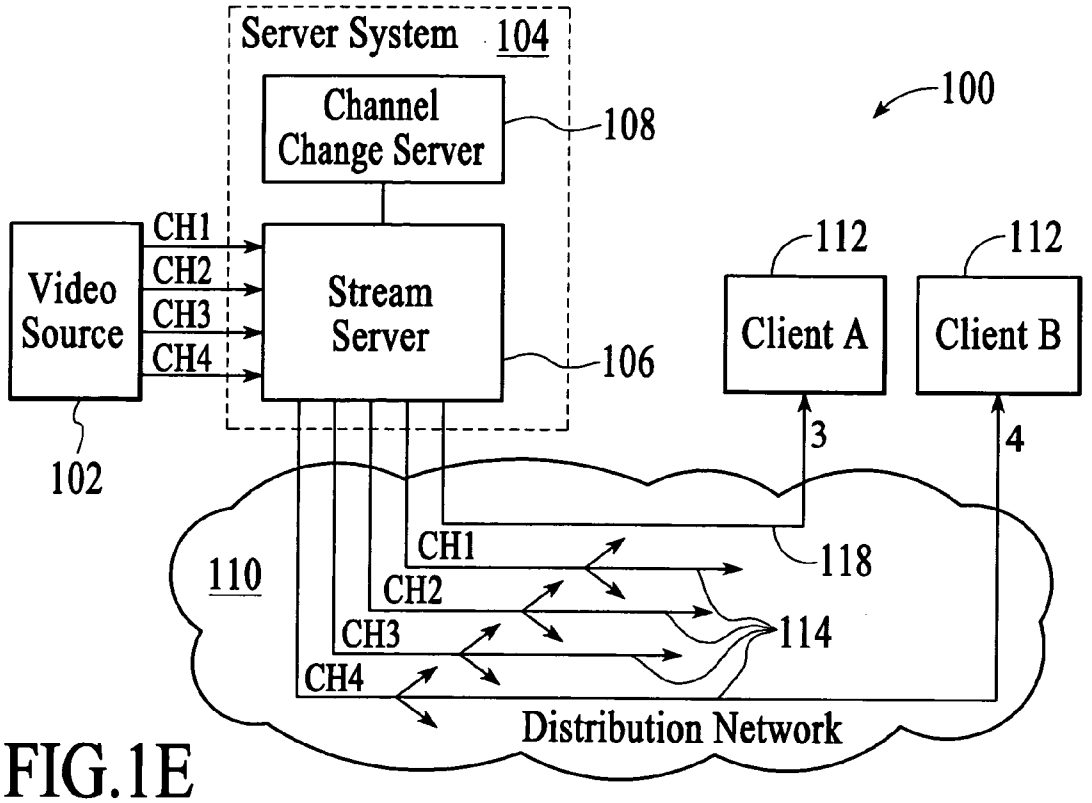
Server System 104
Channel Change Server
108
100
Video Source
CH1
CH2
CH3
CH4
Stream Server
106
112
Client A
112
Client B
3
4
102
110
CH1
CH2
CH3
CH4
118
114
Distribution Network

FIG.1E

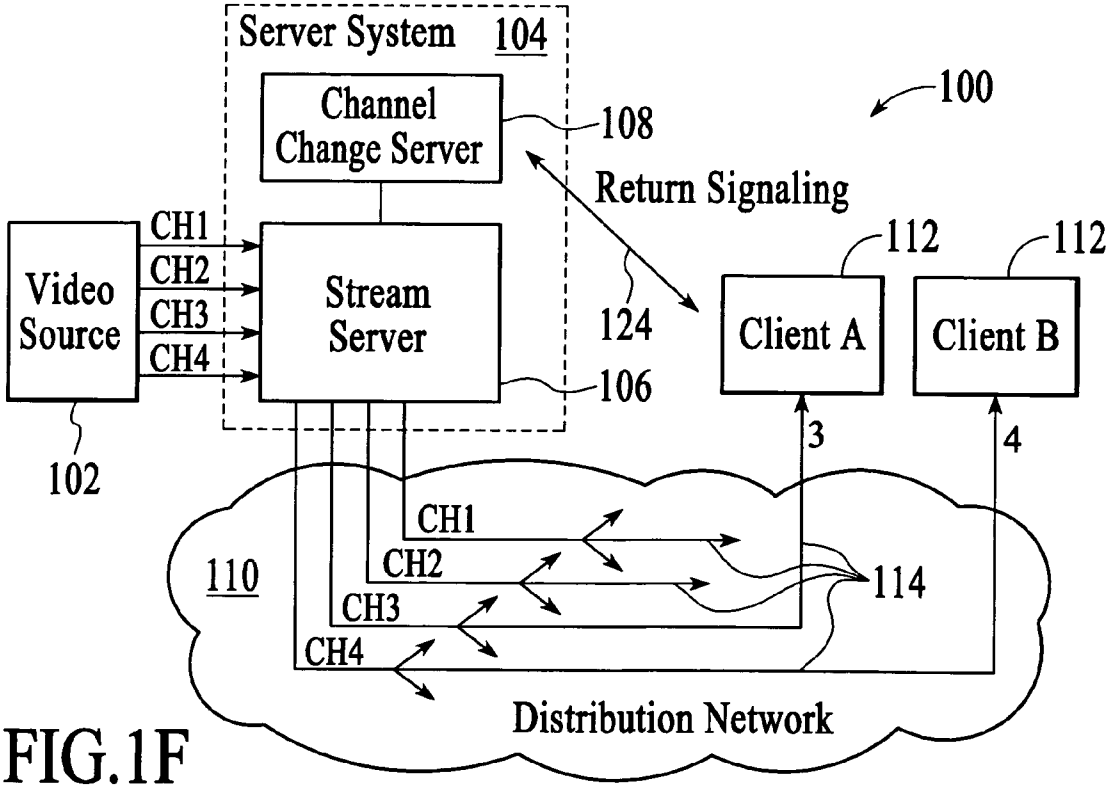
Server System 104
Channel Change Server
108
100
Return Signaling
Video Source
CH1
CH2
CH3
CH4
Stream Server
124
106
112
Client A
112
Client B
3
4
102
110
CH1
CH2
CH3
CH4
114
Distribution Network

FIG.1F

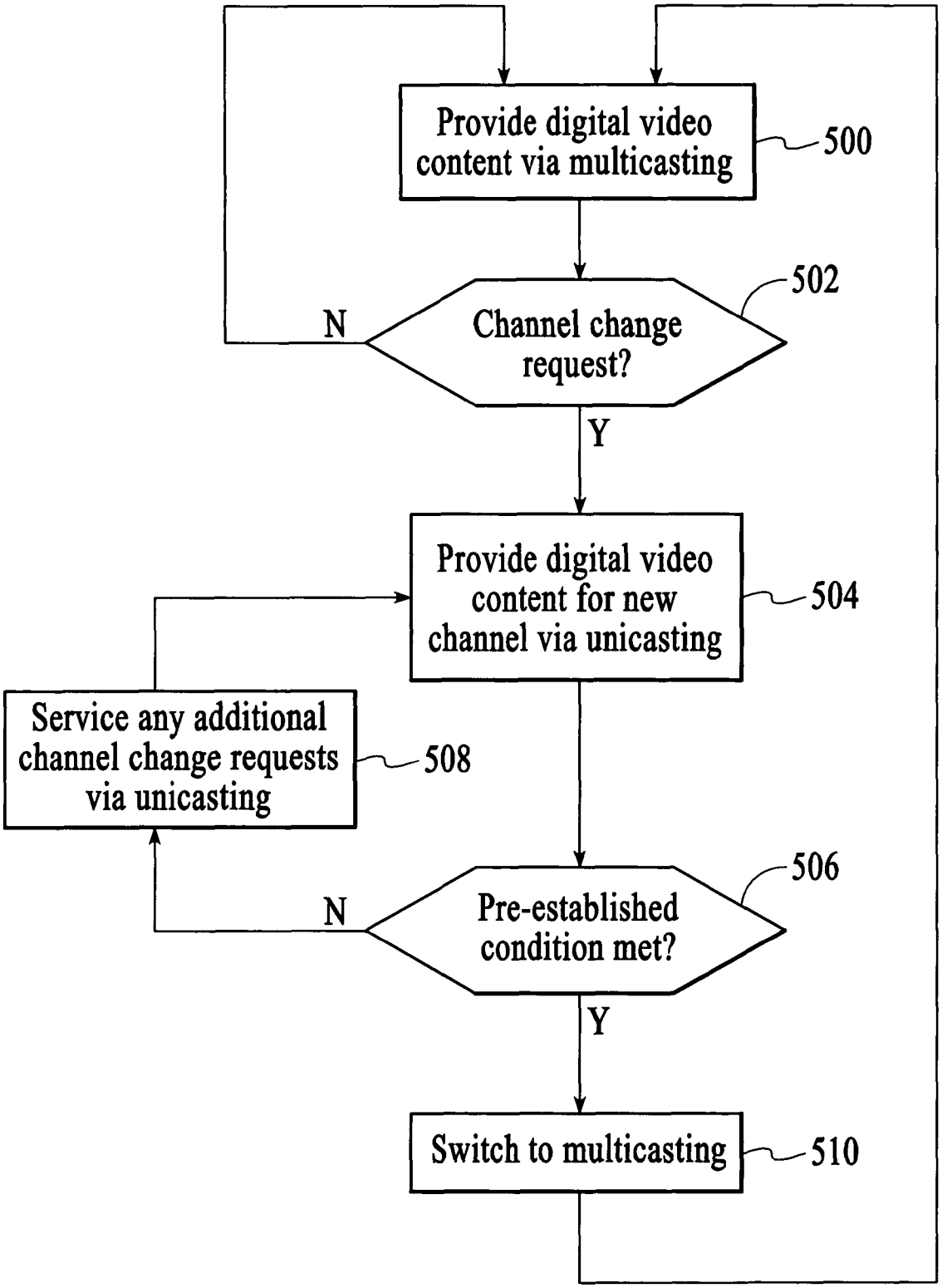
Provide digital video content via multicasting
500
Channel change request?
502
N
Y
Provide digital video content for new channel via unicasting
504
Service any additional channel change requests via unicasting
508
Pre-established condition met?
506
N
Y
Switch to multicasting
510

FIG.2

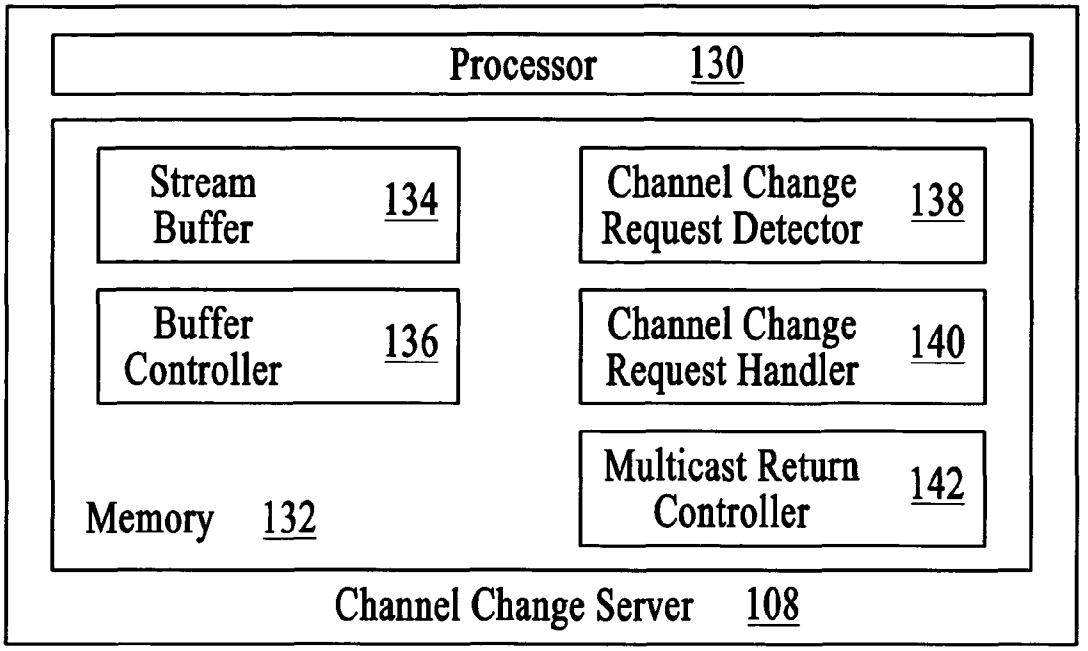
Processor 130
Stream Buffer 134
Channel Change Request Detector 138
Buffer Controller 136
Channel Change Request Handler 140
Multicast Return Controller 142
Memory 132
Channel Change Server 108

FIG.3

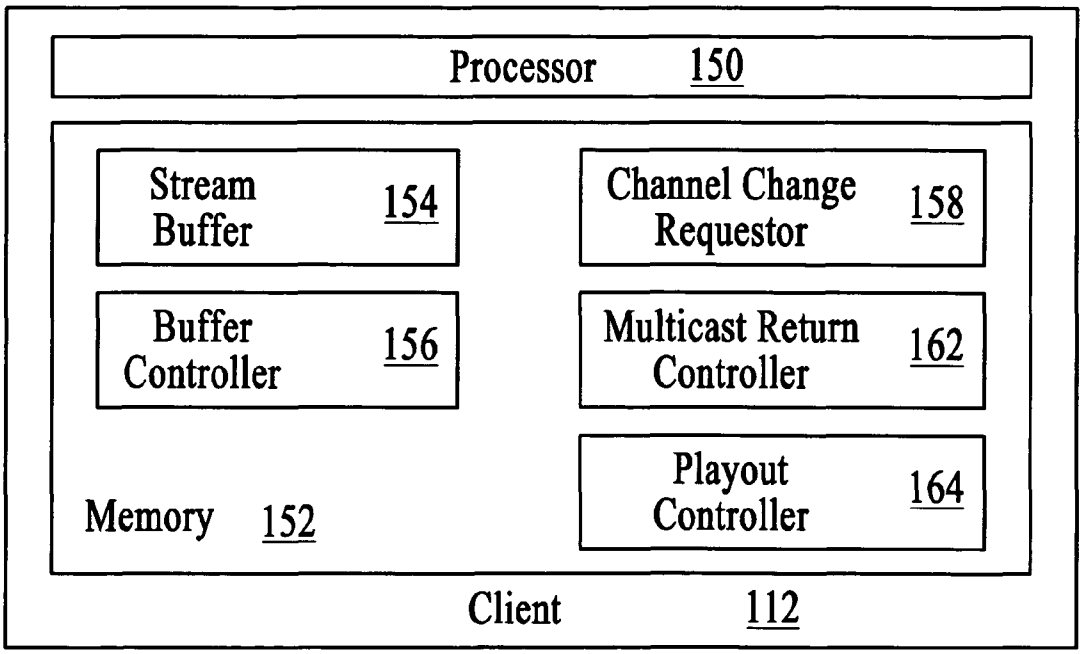
Processor 150
Stream Buffer 154
Channel Change Requestor 158
Buffer Controller 156
Multicast Return Controller 162
Playout Controller 164
Memory 152
Client 112

FIG.4

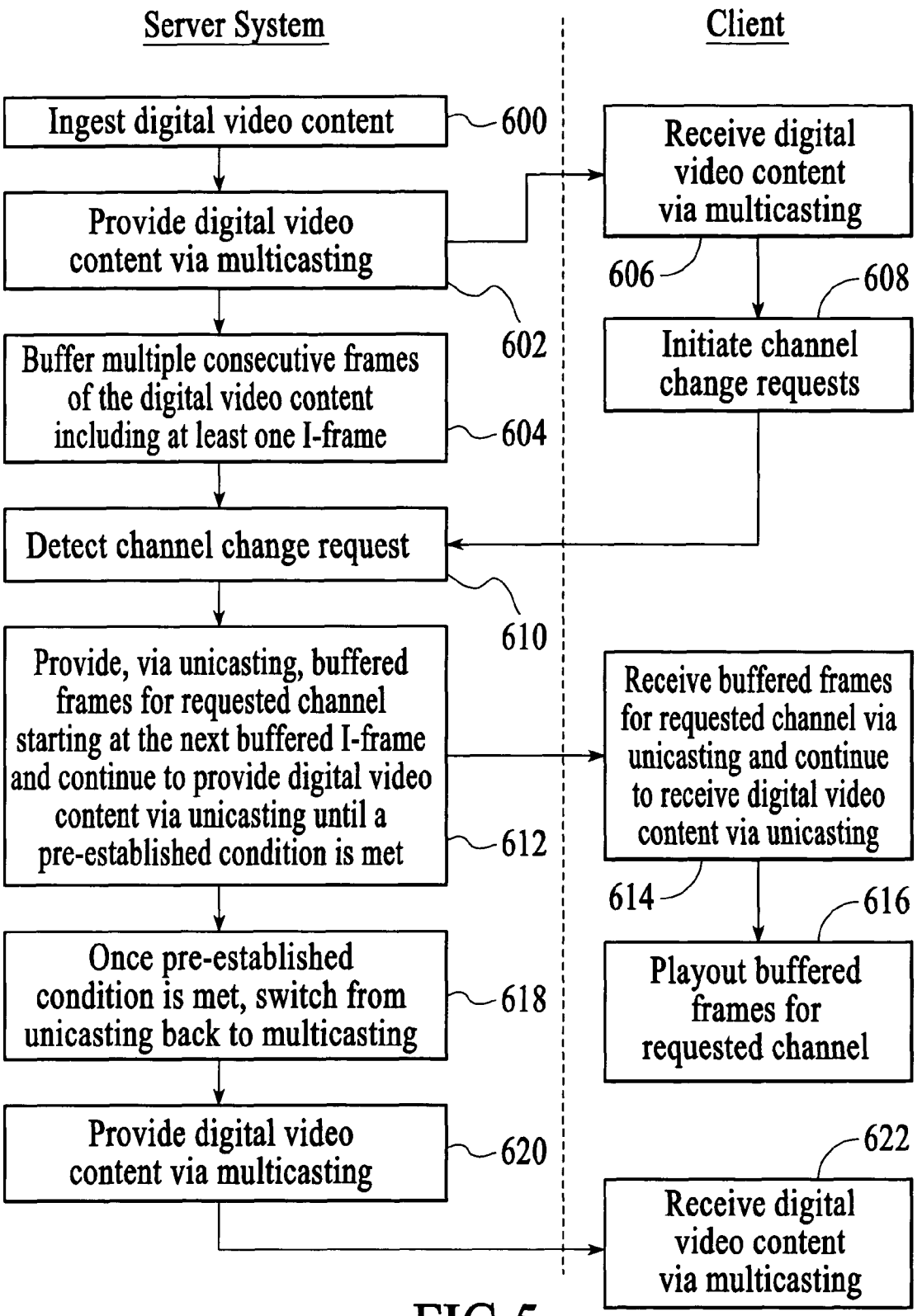
Server System
Client
Ingest digital video content
600
Provide digital video content via multicasting
602
Buffer multiple consecutive frames of the digital video content including at least one I-frame
604
Detect channel change request
610
Provide, via unicasting, buffered frames for requested channel starting at the next buffered I-frame and continue to provide digital video content via unicasting until a pre-established condition is met
612
Once pre-established condition is met, switch from unicasting back to multicasting
618
Provide digital video content via multicasting
620
Receive digital video content via multicasting
606
Initiate channel change requests
608
Receive buffered frames for requested channel via unicasting and continue to receive digital video content via unicasting
614
Playout buffered frames for requested channel
616
Receive digital video content via multicasting
622

FIG.5

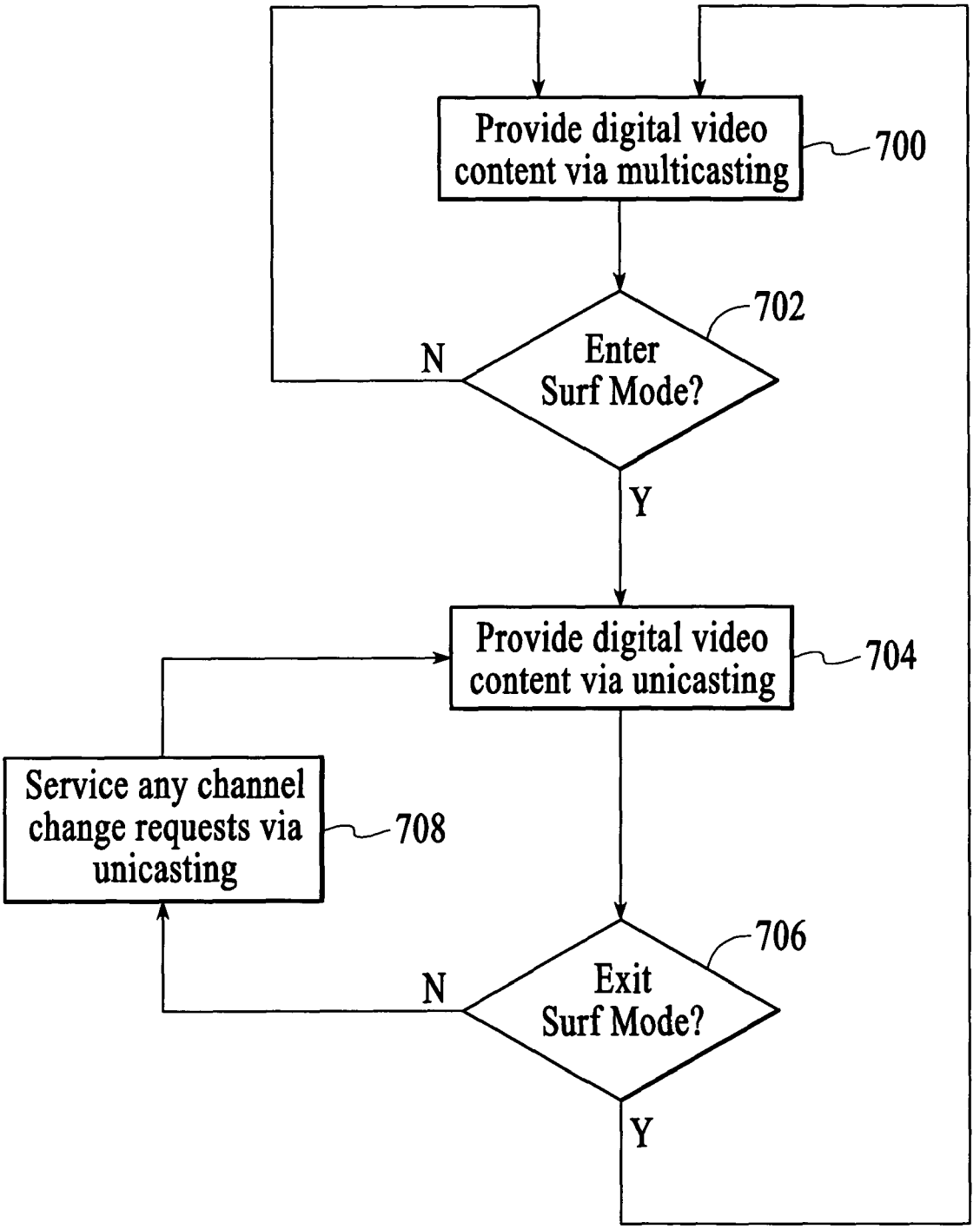
Provide digital video content via multicasting
700
Enter Surf Mode?
702
N
Y
Provide digital video content via unicasting
704
Service any channel change requests via unicasting
708
Exit Surf Mode?
706
N
Y

FIG.6

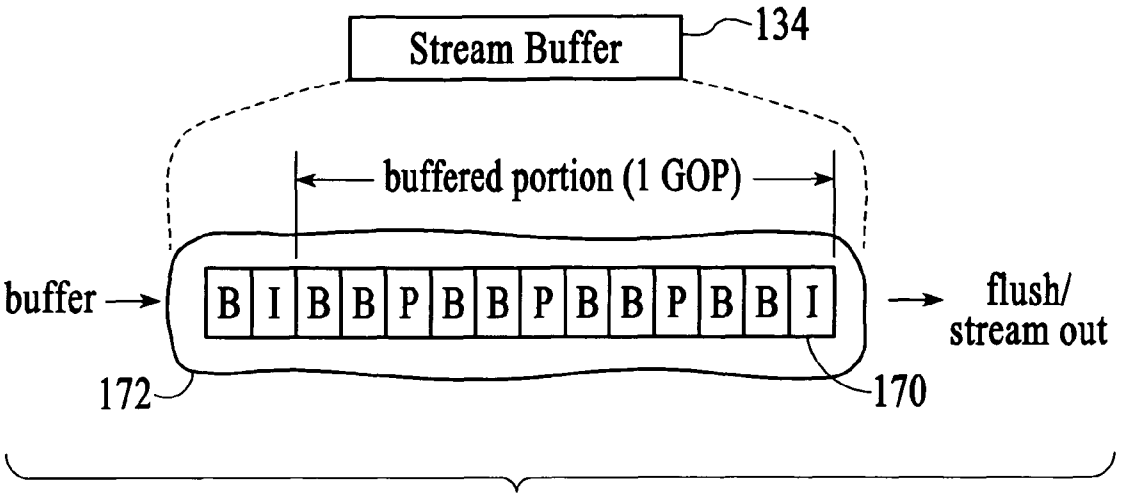
Stream Buffer
134
buffered portion (1 GOP)
buffer
B I B B P B B P B B P B B I
flush/
stream out
172
170

FIG.7A

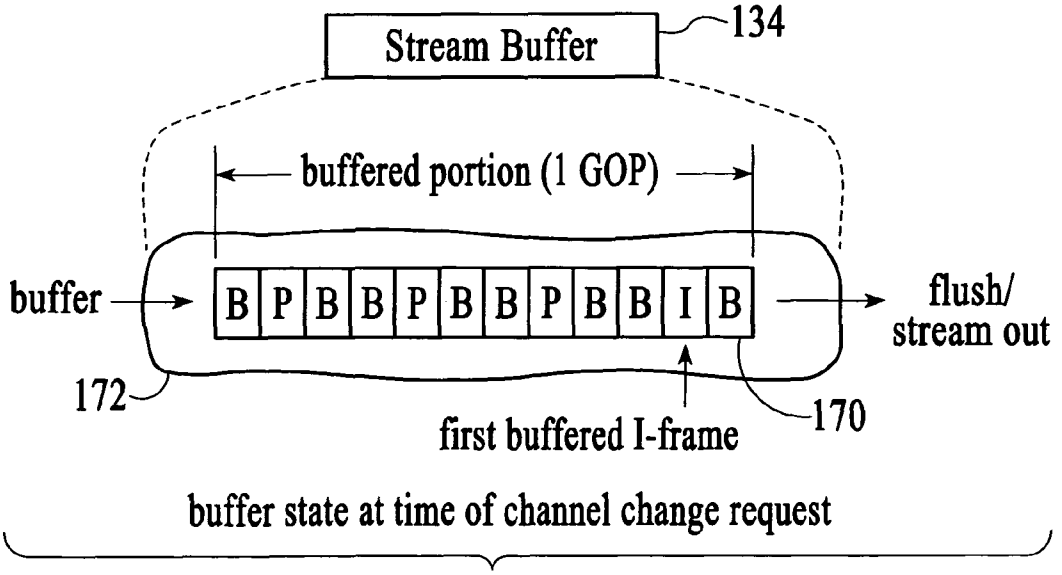
Stream Buffer
134
buffered portion (1 GOP)
buffer
B P B B P B B P B B I B
flush/
stream out
172
170
first buffered I-frame
buffer state at time of channel change request

FIG.7B

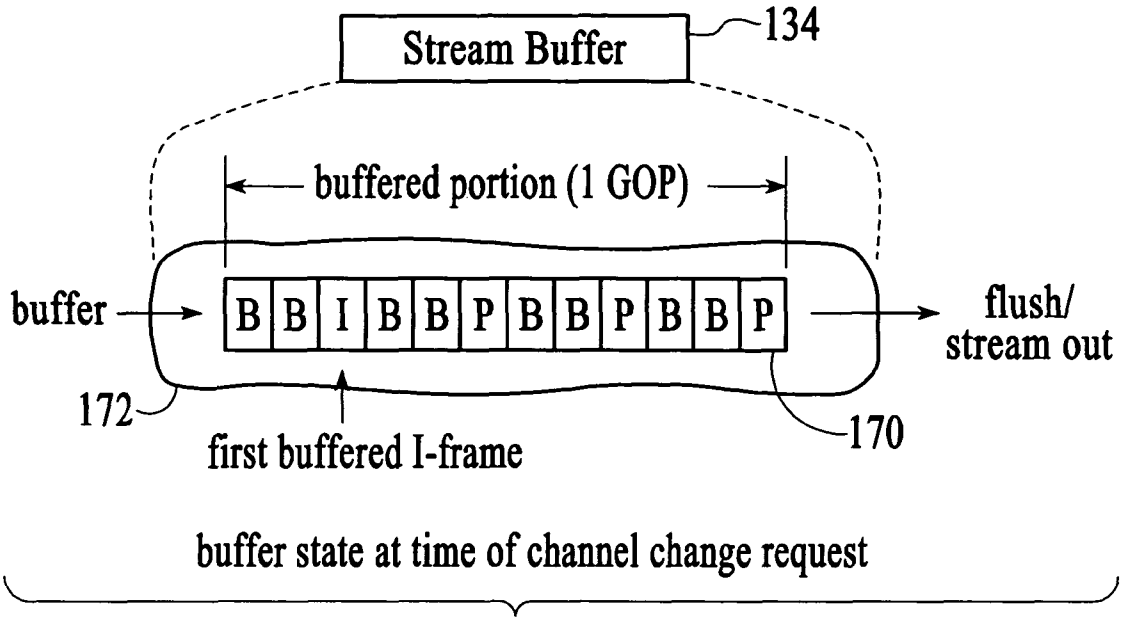
Stream Buffer
134
buffered portion (1 GOP)
buffer
B B I B B P B B P B B P
flush/
stream out
172
170
first buffered I-frame
buffer state at time of channel change request

FIG.7C

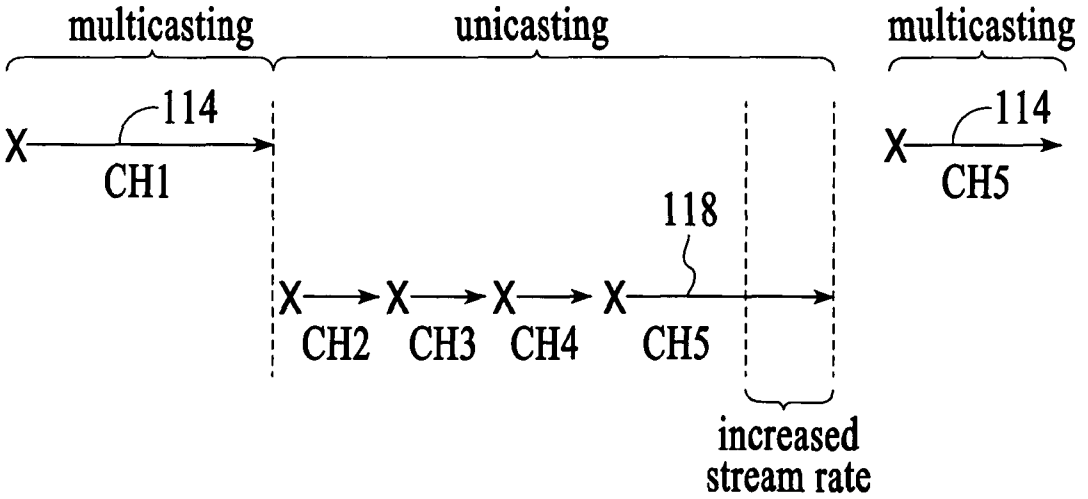
multicasting
unicasting
multicasting
114
CH1
114
CH5
118
CH2
CH3
CH4
CH5
increased
stream rate

FIG.8

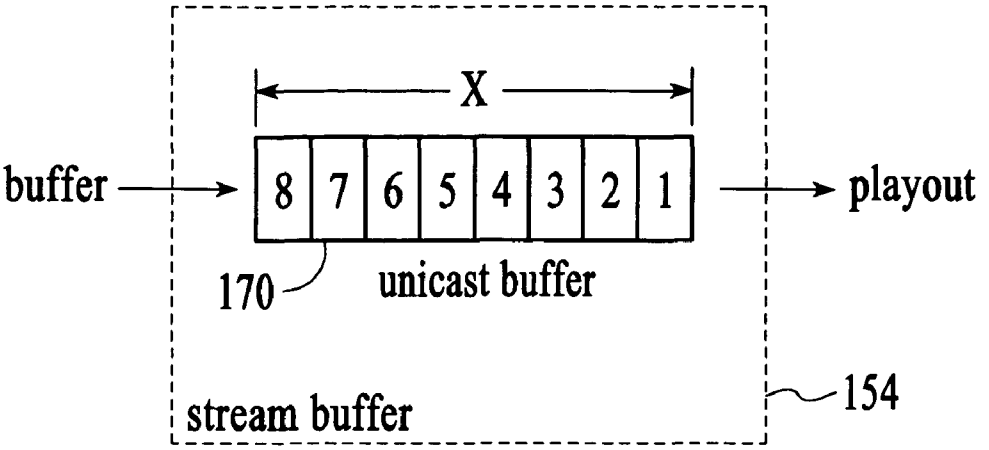
X
buffer
8
7
6
5
4
3
2
1
playout
170
unicast buffer
154
stream buffer

FIG.9A

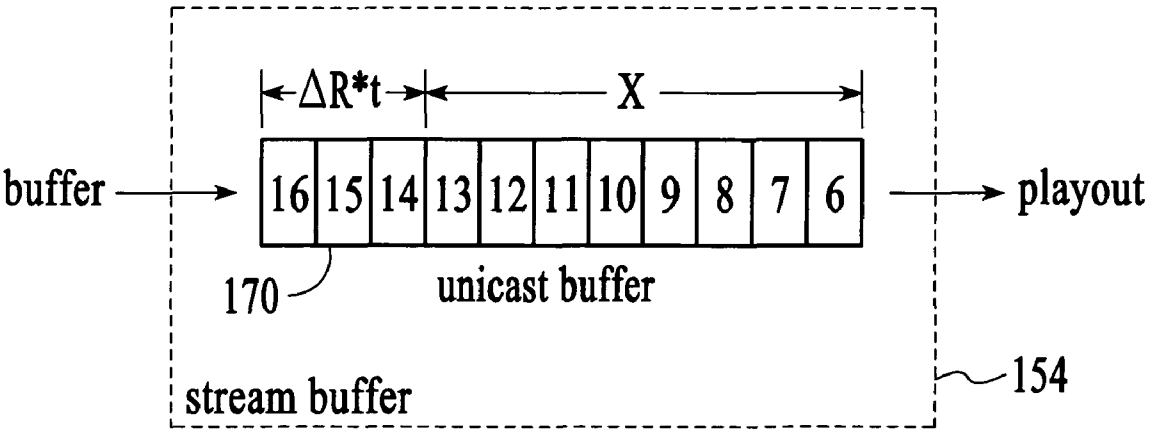
ΔR*t
X
buffer
16
15
14
13
12
11
10
9
8
7
6
playout
170
unicast buffer
154
stream buffer

FIG.9B

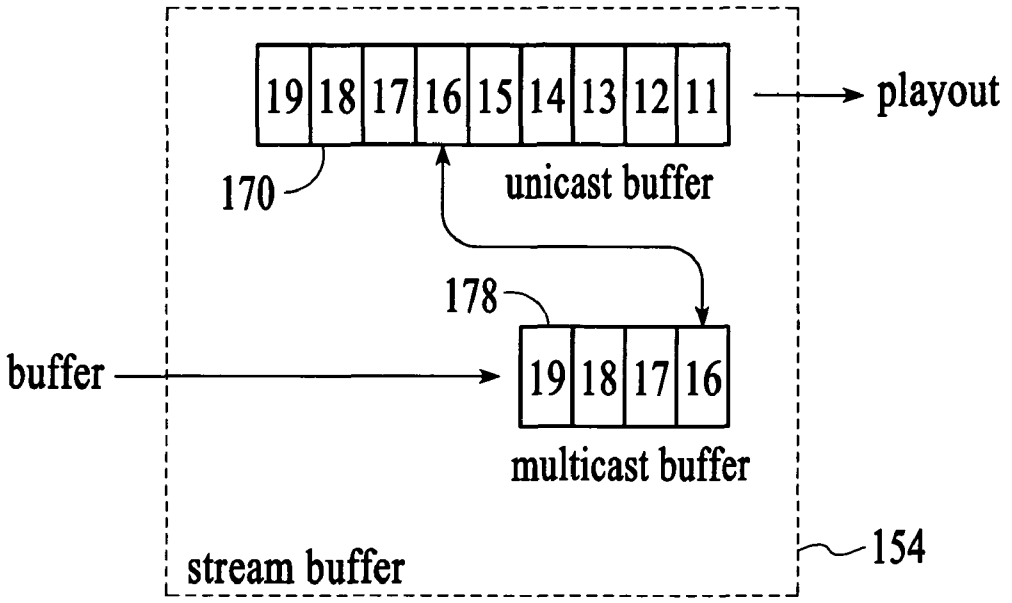
19 18 17 16 15 14 13 12 11
playout
170
unicast buffer
178
buffer
19 18 17 16
multicast buffer
stream buffer
154

FIG.9C

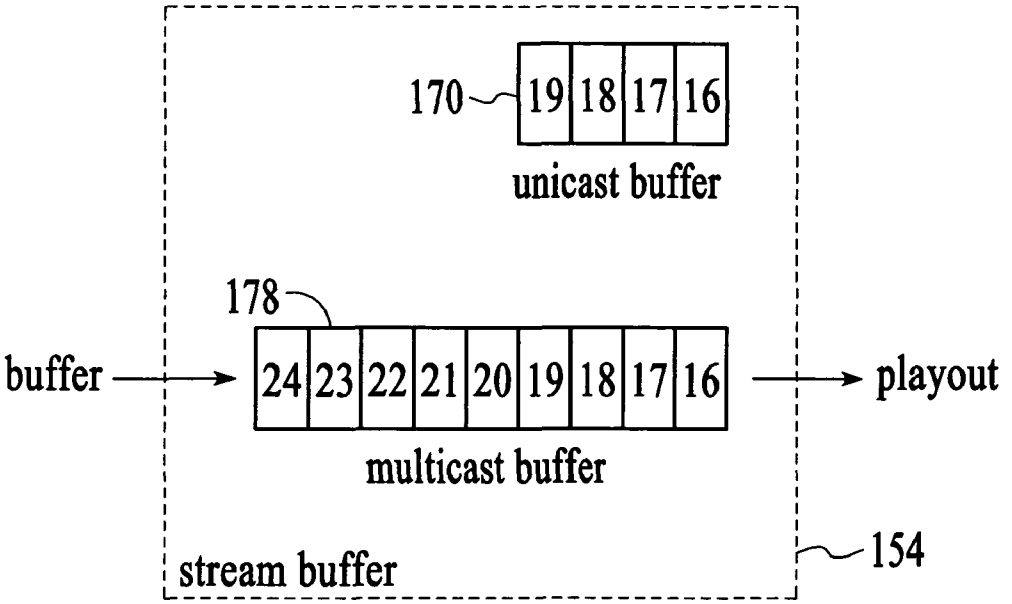
170
19 18 17 16
unicast buffer
178
buffer
24 23 22 21 20 19 18 17 16
playout
multicast buffer
stream buffer
154

FIG.9D

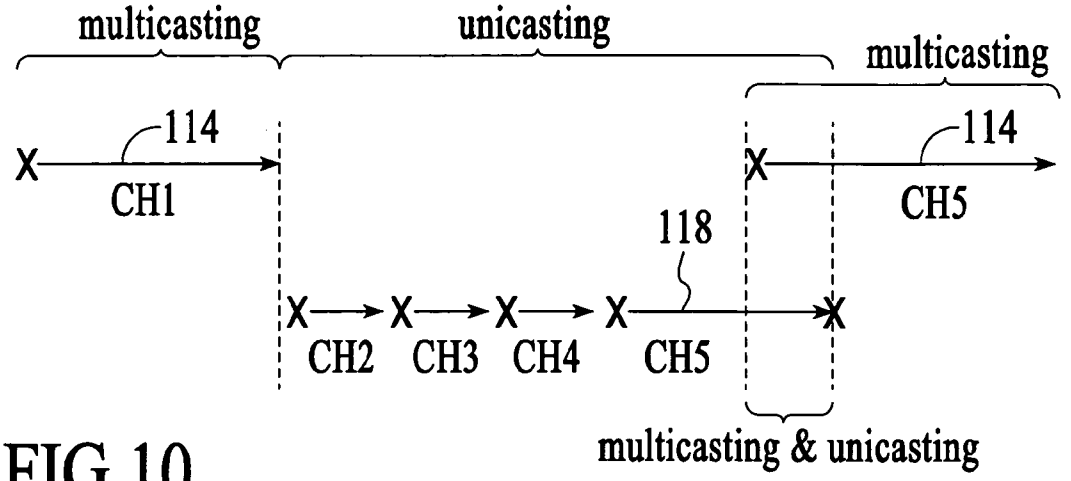

FIG.10

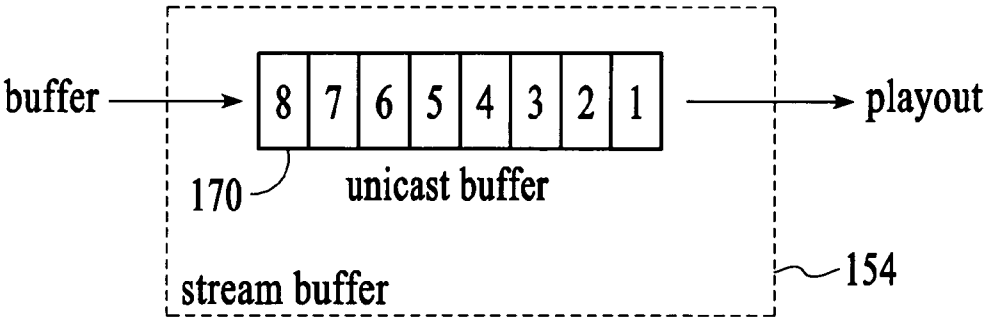

FIG.11A

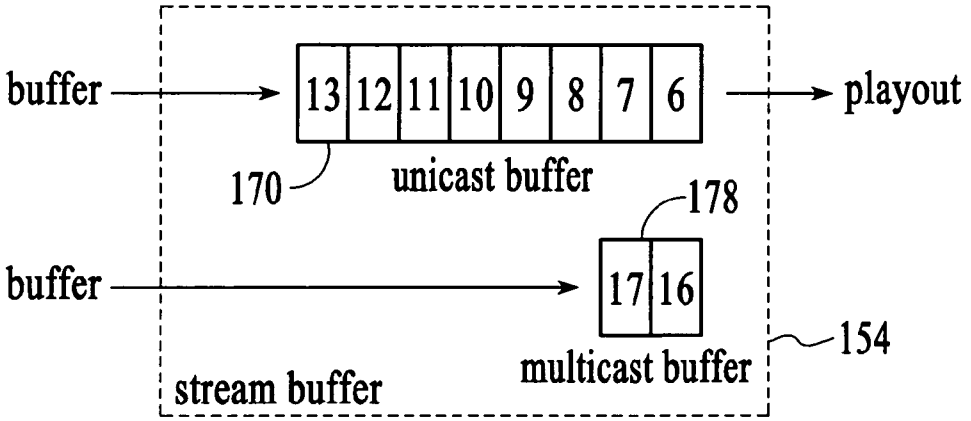

FIG.11B

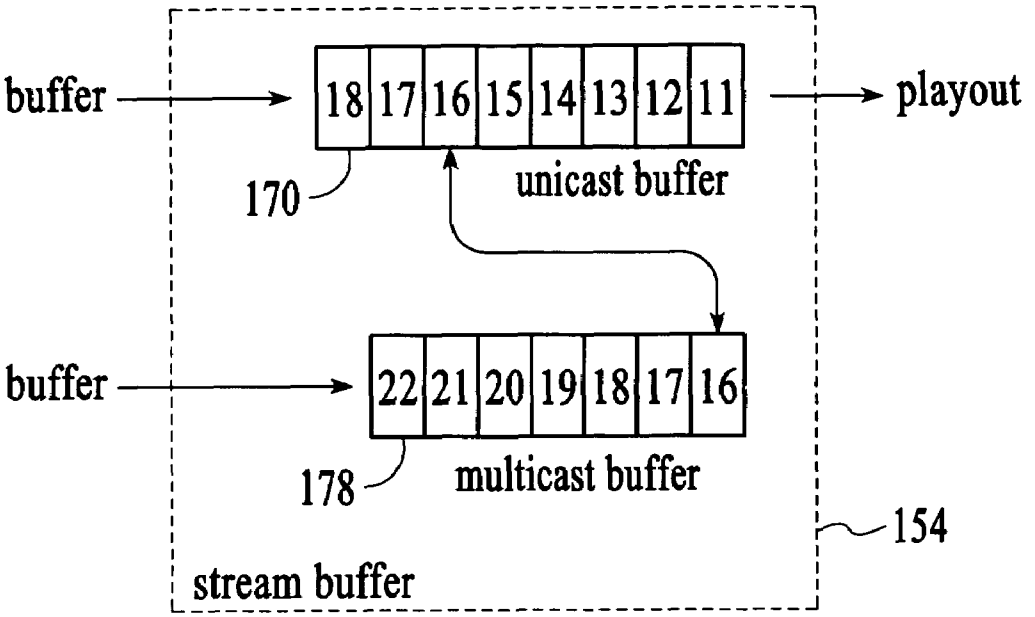

FIG.11C

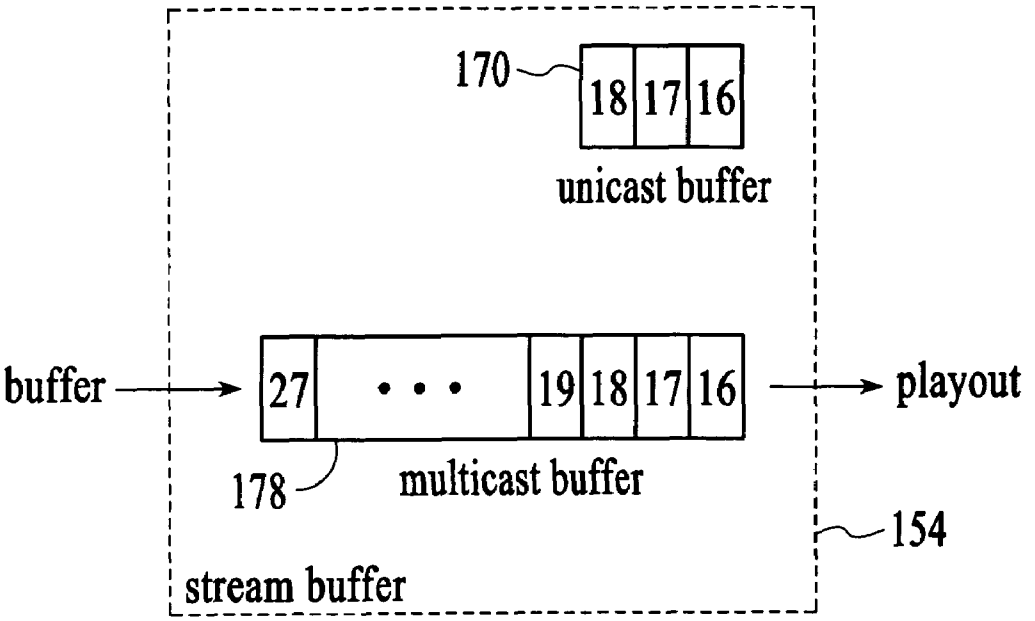

FIG.11D

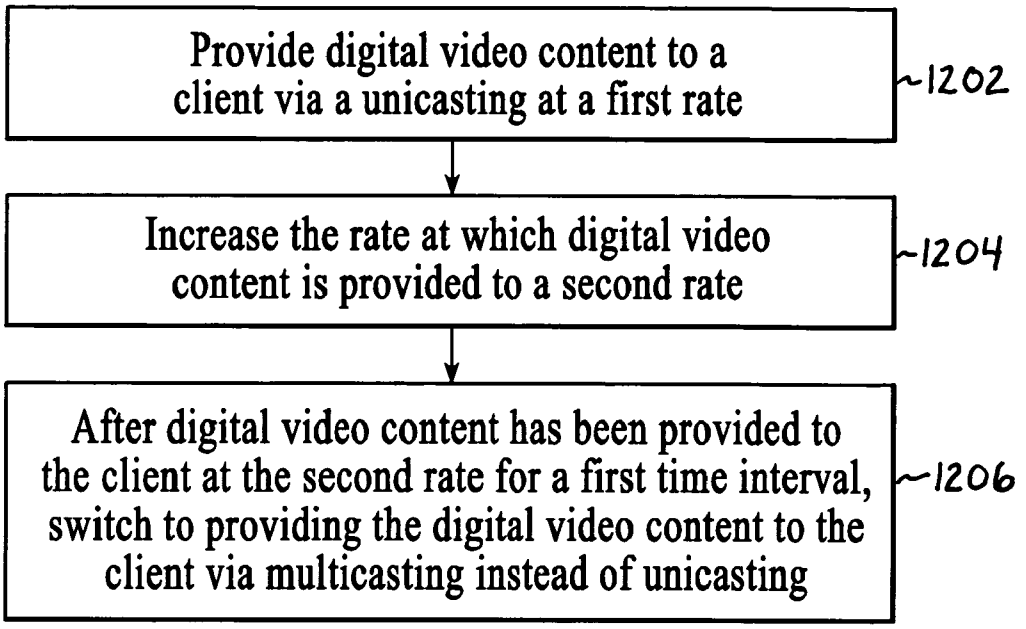
Provide digital video content to a client via a unicasting at a first rate
1202
Increase the rate at which digital video content is provided to a second rate
1204
After digital video content has been provided to the client at the second rate for a first time interval, switch to providing the digital video content to the client via multicasting instead of unicasting
1206

FIG.12

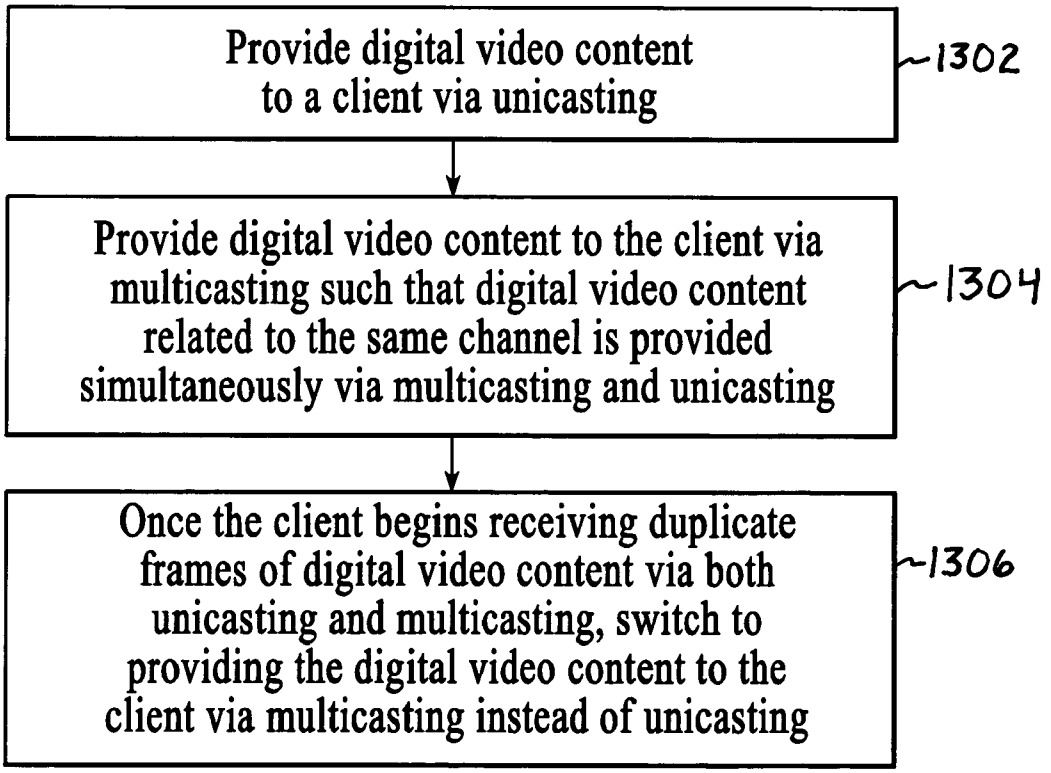
Provide digital video content to a client via unicasting
1302
Provide digital video content to the client via multicasting such that digital video content related to the same channel is provided simultaneously via multicasting and unicasting
1304
Once the client begins receiving duplicate frames of digital video content via both unicasting and multicasting, switch to providing the digital video content to the client via multicasting instead of unicasting
1306

FIG.13

FAST CHANNEL CHANGE WITH CONDITIONAL RETURN TO MULTICASTING

CROSS-REFERENCE TO RELATED APPLICATIONS

This application is entitled to the benefit of provisional U.S. Patent Application Ser. No. 60/655,328, filed Feb. 23, 2005 and provisional U.S. Patent Application Ser. No. 60/719,146, filed Sep. 21, 2005, the disclosure of which is incorporated by reference herein in its entirety.

This application is related to the co-filed applications entitled "SWITCHING A CLIENT FROM UNICASTING TO MULTICASTING BY INCREASING THE UNICAST STREAM RATE TO THE CLIENT" having application Ser. No. 11/360,080, filed Feb. 23, 2006 and "SWITCHING A CLIENT FROM UNICASTING TO MULTICASTING BY SIMULTANEOUSLY PROVIDING UNICAST AND MULTICAST STREAMS TO THE CLIENT" having application Ser. No. 11/361,303, filed Feb. 23, 2006.

FIELD OF THE INVENTION

The invention relates generally to digital video networks, and more particularly, to techniques for fast channel change in digital video networks that are capable of distributing digital video content via multicasting and unicasting.

BACKGROUND OF THE INVENTION

The viewer experience with delivery of digital video content via broadcast channels is often poor. Because of the characteristics of compressed video encoding, the viewer often waits seconds after selection of a broadcast channel until the digital video content is finally displayed. Because viewers are accustomed to near instantaneous channel change functionality with analog television, the quality of the digital television experience often times does not meet viewer expectations.

The root of the slow channel change problem has to do with the framing of compressed video (e.g., MPEG2 or MPEG4/H.264). In order to minimize bandwidth, the majority of the frames contained within a compressed stream of digital video content are P-frames and B-frames, which are frames that encode changes to a displayed image. An I-frame (MPEG2) on the other hand is a frame that presents a complete new image. The rate at which I-frames (or equivalent I-slice constructs in MPEG4) are delivered in a digital video stream is typically one I-frame every ¼ to 2 seconds, depending on the amount of motion contained within the stream. The delay after requesting a channel change is dominated by having to wait until the next I-frame finally arrives, which can be up to 2 seconds, before the new channel can be displayed.

In an Internet Protocol (IP) television environment, different channels of digital video content are distributed to multiple clients via IP multicasting. One technique for implementing a fast channel change in an IP television environment is described in U.S. Pat. Publ. No. 2005/0081244 to Barret et al. The technique described by Barret et al. involves servicing a channel change request by 1) retaining an I-frame from each different broadcast stream, and then 2) transmitting the retained I-frame for the requested channel to the corresponding client via a unicast message instead of via a multicast message. The I-frame is then used to quickly display the requested channel. Once the retained I-frame is sent to the client via the unicast message, the client is rapidly joined to the multicast group corresponding to the requested channel in time for the client to receive the next I-frame via multicasting. In IP television environments, internet group management protocol (IGMP) is typically used to join clients to multicast groups. While transmitting an I-frame via a unicast message works well to achieve a fast channel change, using IGMP to join a client to a multicast group requires multiple messages between client and server. When a large number of channel change requests are made in a short period of time, the flood of associated IGMP messages can introduce significant delay into the network. In particular, delay associated with the IGMP messages can place limitations on the scalability of this fast channel technique.

In view of this, what is needed is a fast channel change technique that is able to efficiently accommodate large numbers of channel change requests that are received in a short period of time.

SUMMARY OF THE INVENTION

In a digital video network that is capable of distributing digital video content to a client via multicasting and unicasting, servicing a channel change request from a client involves switching from providing the digital video content to the client via multicasting to providing the digital video content to the client via unicasting and continuing to provide digital video content to the client via unicasting until a pre-established condition is met. Continuing to provide digital video content to the client via unicasting until a pre-established condition is met allows the network to opportunistically switch the client from unicasting back to multicasting. By opportunistically switching the client from unicasting back to multicasting, network resources can be intelligently managed to achieve efficient resource utilization.

Switching from unicasting back to multicasting may be accomplished using many different techniques. In accordance with an embodiment of the invention, a technique for switching a client from unicasting back to multicasting involves accumulating enough digital video content at the client to bridge the time it takes to transition from receiving the digital video content via unicasting to receiving the digital video content via multicasting. Digital video content is accumulated at the client by temporarily increasing the stream rate of the unicast stream above the playout rate. While the digital video content is being streamed at the increased rate, the amount of digital video content stored in the client's stream buffer grows (as opposed to staying the same, which is the case when the stream rate is the same as the playout rate). The stream rate is held at the increased rate until the client accumulates enough frames in its buffer to be able to bridge the time it takes to transition from receiving the digital video content via unicasting to receiving the digital video content via multicasting.

In accordance with another embodiment of the invention, a technique for switching a client from unicasting back to multicasting involves simultaneously providing the digital video content to the client via unicasting and multicasting until the client has buffered duplicate frames (i.e., frames that contain the same digital video content). Once the client has buffered duplicate frames, the client can transition from playing out of a buffer that holds frames received via unicasting to playing out of a buffer that holds frames received via multicasting without skipping a frame. Once the transition back to multicasting is complete, unicasting is terminated and any frames remaining in the unicast buffer are flushed.

Other aspects and advantages of the present invention will become apparent from the following detailed description,

taken in conjunction with the accompanying drawings, illustrating by way of example the principles of the invention.

BRIEF DESCRIPTION OF THE DRAWINGS

FIGS. **1**A-**1**F illustrate a technique for servicing channel change requests in accordance with an embodiment of the invention.

FIG. **2** depicts a process flow diagram of the above-described technique for servicing channel change requests in a digital video network that is capable of distributing digital video content to clients via multicasting and unicasting.

FIGS. **3** and **4** depict an embodiment of a channel change server and a client, respectively, which are configured to service channel change requests in accordance with an embodiment of the invention.

FIG. **5** depicts an exemplary process flow diagram that illustrates the interaction between a server system and a client related to servicing a channel change request.

FIG. **6** is an exemplary process flow diagram of surf mode logic in accordance with an embodiment of the invention.

FIGS. **7**A-**7**C depict a process of servicing a channel change request via unicasting.

FIG. **8** illustrates a technique for switching a client from unicasting back to multicasting in accordance with an embodiment of the invention.

FIGS. **9**A-**9**D depict exemplary states of the client's stream buffer with respect to the technique described with reference to FIG. **8**.

FIG. **10** illustrates another technique for switching a client from unicasting back to multicasting in accordance with an embodiment of the invention.

FIGS. **11**A-**11**D depict exemplary states of the client's stream buffer with respect to the technique described with reference to FIG. **10**.

FIG. **12** is a process flow diagram of a method for servicing a channel change request in a digital video network in accordance with an embodiment of the invention.

FIG. **13** is a process flow diagram of another method for servicing a channel change request in a digital video network in accordance with another embodiment of the invention.

Throughout the description, similar reference numbers may be used to identify similar elements.

DETAILED DESCRIPTION OF THE INVENTION

As used herein, the terms "multicast" and "multicasting" refer to a technique for providing the same digital video content to multiple clients in which the digital video content is delivered over common links only once (e.g., the digital video content is copied when it reaches nodes with links to multiple destinations). As used herein, multicast and multicasting are synonymous with the terms broadcast and broadcasting as related to, for example, hybrid fiber coaxial (HFC) cable networks.

As used herein, the terms "unicast" and "unicasting" refer to a technique for providing digital video content to a single specified client.

In some applications, the network for distributing digital video content is a packet-based network. In packet-based networks, multicasting may involve replicating packets at nodes that include multiple branches leading to different clients. The replication of packets at branching nodes eliminates the need to send multiple packets of the same content over the same link. Packet-based distribution networks may utilize, for example, IP, Ethernet, ATM, or a combination thereof to communicate digital video content. In packet-based networks, unicasting typically involves point-to-point messaging between nodes (e.g., servers and clients). Point-to-point messaging can be accomplished, for example, using well-known source/destination address based protocols (e.g., IP or Ethernet).

In some applications, the network for distributing digital video content includes an HFC network that utilizes radio frequency signals (RF) for local distribution of digital video content to the clients. In HFC networks, multicasting typically involves distributing all channels to all clients. Each client is able to receive any channel by tuning to the desired channel. In HFC networks, unicasting may involve distributing a channel, which is intended for only one client, to multiple clients and coordinating with the intended client so that only the intended client is able to receive to the desired channel. Even though the channel may be distributed to multiple clients, only one client, the intended client, is able to access the channel and display the digital video content. For purposes of this description, a communications technique such as this, which can be implemented in HFC networks, is considered unicasting.

FIGS. **1**A-**1**F illustrate a technique for servicing channel change requests in accordance with an embodiment of the invention. Referring to FIG. **1**A, the digital video network **100** includes a video source **102**, a server system **104** having a stream server **106** and a channel change server **108**, a distribution network **110**, and clients **112**. The video source provides multiple channels of digital video content to the stream server. The stream server ingests the digital video content from the video source and controls the distribution of the digital video content into the distribution network. The channel change server manages channel change requests that are received from the clients. The channel change server is described in more detail below.

The distribution network **110** supports the multicasting and unicasting of digital video content downstream to the clients **112**. The distribution network also supports upstream unicast messaging from the clients to the stream server **106** and channel change server **108**. The distribution network may utilize any network technology that supports multicasting and unicasting. In a packet-based environment, the distribution network may utilize, for example, routers, switches, DSLAMs, cable modem termination systems (CMTSs), passive optical network (PON) architectures, or any combination thereof. In an HFC environment, the distribution network may utilize, for example, a combination of routers, switches, and QAMs. The clients are systems that receive the digital video content from the distribution network and provide the digital video content to video display devices (e.g., televisions). The clients may be embodied as hardware, firmware, software, or any combination thereof and are sometimes referred to as set-top boxes (STBs). Clients in general are well-known in the field. Specific functions of the clients in accordance with the invention are described in more detail below.

Referring to FIG. **1**A, multiple channels of digital video content are provided to the stream server **106**. For example purposes, channels **1**, **2**, **3**, and **4** are provided to the stream server although it should be understood that more channels could be provided. In this embodiment, the digital video content is real-time digital video content that is received at the video source **102** and passed to the stream server with little or no delay. For example, the digital video content includes real-time content from the content producers and/or distributors. The digital video content may include, for example, live content (e.g., live sporting events, news, etc.) or pre-recorded content that is released by the content producers and/or dis-

tributors. In other embodiments, the digital video content may be stored locally by the stream server, by a dedicated storage server, or within the distribution network **110**. Whether the digital video content is real-time or stored locally, the digital video content is delivered to the stream server for distribution to the clients **112**. The stream server supports the multicasting of the channels to any client that desires to receive the digital video content. As illustrated by the branching distribution arrows in FIG. **1**A, all four channels can be distributed via multicasting **114** within the distribution network to reach multiple clients.

In the example of FIG. **1**A, client A receives channel **1** via multicasting and client B receives channel **4** via multicasting. Although not shown, these channels can be received by multiple clients simultaneously via multicasting. Note, in an HFC network that utilizes RF for local distribution of digital video content to the clients, multiple channels may be provided simultaneously to multiple clients via the RF signals although only the desired channel is received and demodulated by the client.

Referring to FIG. **1**B, a channel change request (CCR) **116** is made by client A to change from channel **1** to channel **2**. In an embodiment, the channel change request is provided to the channel change server **108** via a unicast message from the client **112** to the channel change server. The channel change request is serviced by providing the digital video content related to the requested channel to the client via unicasting. That is, digital video content related to the requested channel is provided to the client via unicasting instead of via multicasting. FIG. **1**C depicts channel **2** being provided to client A via unicasting **118** instead of multicasting **114**. In an embodiment, to achieve a fast change from channel **1** to channel **2** using unicasting instead of multicasting, a unicast session is established between the server system and the client and the stream server starts unicasting channel **2** with an I-frame. A technique for starting a unicast with an I-frame is described in more detail below.

In accordance with the invention and in contrast to the prior art, the digital video content related to channel **2** continues to be provided to the client **112** via unicasting until a pre-established condition is met. That is, multiple consecutive frames of digital video content related to channel **2** are unicast to the client and the client is not switched back to receiving digital video content via multicasting until some pre-established condition is satisfied. In particular, the client is not switched back to multicasting after the unicasting of a single I-frame as is known in the prior art. By not immediately switching back to multicasting after unicasting the single I-frame, the network is allowed to opportunistically switch the client from unicasting back to multicasting. By opportunistically switching the client from unicasting back to multicasting, network resources can be intelligently managed to achieve efficient resource utilization.

In accordance with the invention, exemplary pre-established conditions which could trigger a switch from unicasting back to multicasting include:

1) Expiration of a pre-established time interval;
2) Expiration of a pre-established time interval in which no channel change requests are received;
3) An explicit request to join multicasting (e.g., a request to switch back to multicasting or a request to exit a surf mode);
4) Reaching a pre-established resource threshold (e.g., switch back to multicasting only when certain resources are available);
5) Reaching a benefit threshold (e.g., switch back to multicasting only if a certain benefit is achieved or only if certain resources can be reclaimed).

Before the client **112** is switched back to multicasting, if any additional channel change requests are made by the client (e.g., client A), the channel change requests are serviced via unicasting instead of multicasting. FIG. **1**D depicts a channel change request **122** that is generated by client A before the client is switched from unicasting back to multicasting. In this case, client A is requesting a change to channel **3**. In response to the channel change request, the digital video content related to channel **3** is provided to the client via unicasting instead of multicasting. FIG. **1**E depicts channel **3** being provided to client A via unicasting instead of multicasting. The channel change requests can be serviced via unicasting by splicing the requested channel into the unicast session that was used to provide the previous channel. In an embodiment, the stream server indicates channel change boundaries between unicast streams by, for example, using a marker bit or an explicit signal at the first I-frame of a new unicast stream. Further, once the client detects the start of the new unicast stream, the client resets its decoder and flushes from its buffer undecoded frames related to the previous unicast stream.

Once the pre-established condition is met, the process of switching back to providing digital video content to the client **112** via multicasting instead of unicasting is initiated. FIG. **1**F depicts communications **124** between the channel change server **108** and client A that support the switching of client A from unicasting back to multicasting. FIG. **1**F also depicts channel **3** being provided to client A via multicasting instead of unicasting after the switch has been completed. Note that in FIG. **1**F the unicast session between the server system **104** and client A has been terminated.

FIG. **2** depicts a process flow diagram of the above-described method for servicing channel change requests in a digital video network that is capable of distributing digital video content to clients via multicasting and unicasting. At block **500**, digital video content is provided to a client via multicasting. At decision point **502**, it is determined if there has been a channel change request. If there is no channel change request, then the digital video content continues to be provided to the client via multicasting. If there is a channel change request, then digital video content for the new channel is provided to the client via unicasting instead of multicasting (block **504**). In an embodiment, unicasting of the new channel involves starting the unicast with the first buffered I-frame and continuing to unicast multiple consecutive frames of the digital video content related to the requested channel. In accordance with an embodiment of the invention, digital video content continues to be provided to the client via unicasting until a pre-established condition is met. As long as the pre-established condition has not been met (the "N" branch at decision point **506**), digital video content continues to be provided via unicasting (block **504**) and any additional channel change requests are serviced via unicasting (block **508**). Once the pre-established condition is met (the "Y" branch at decision point **506**), a switch is made from unicasting back to multicasting (block **510**). Some techniques for making a smooth transition from unicasting to multicasting are described below. After the switch is complete, digital video content is once again provided to the client via multicasting (block **500**).

FIG. **2** can be viewed from the perspective of the server system **104** (e.g., the stream server **106** and/or the channel change server **108**). Alternatively, FIG. **2** can be viewed from the perspective of the client **112** by modifying block **500** to

read 'receive' digital video content via multicasting instead of 'provide' digital video content via multicasting and by modifying block **504** to read 'receive' digital video content for new channel via unicasting instead of 'provide' digital video content for new channel via unicasting.

FIGS. **3** and **4** depict an embodiment of a channel change server **108** and a client **112**, respectively, which are configured to service channel change requests as described above. With reference to FIG. **3**, the channel change server includes a processor **130** and memory **132**. The memory includes a stream buffer **134**, a buffer controller **136**, a channel change request detector **138**, a channel change request handler, **140**, and a multicast return controller **142**. The buffer controller manages the buffering of digital video content that is streamed into the stream server. The buffered streams are held in the stream buffer for a limited period of time. In an embodiment, approximately one-half to two seconds from each stream is continuously buffered in the stream buffer. The channel change request detector detects channel change requests that are generated by the clients. In an embodiment, channel change requests are unicast messages that are addressed to the channel change server or forwarded to the channel change server through an intermediate server. The channel change request handler manages the switch from multicasting to unicasting that occurs in response to a channel change request. The multicast return controller manages the switch from unicasting back to multicasting once the pre-established condition is met. In an embodiment, the multicast return controller actively monitors the pre-established condition and in other embodiments, the multicast return controller receives a signal indicating that the pre-established condition has been met.

With reference to FIG. **4**, the client **112** includes a processor **150** and memory **152**. The memory includes a stream buffer **154**, a buffer controller **156**, a channel change requestor **158**, a multicast return controller **162**, and a playout controller **164**. The buffer controller manages the buffering of an incoming stream (or streams if the client is able to simultaneously ingest multiple streams) into the stream buffer. The channel change requestor generates the channel change requests that are provided to the channel change server **108**. In an embodiment, the channel change requestor generates a unicast message, which is addressed directly to the channel change server, as the channel change request. The multicast return controller of the client manages the switch from unicasting back to multicasting and the playout controller controls the playout of digital video content from the stream buffer.

In an embodiment, channel change requests are serviced through interaction between the server system **104** and the client **112**. FIG. **5** depicts an exemplary process flow diagram that illustrates the interaction between the server system (i.e., the channel change server **108** and/or the stream server **106**) and a client **112** related to servicing a channel change request. At block **600**, digital video content is ingested, for example, at the stream server. In an embodiment, real-time digital video content for multiple channels is received at the stream server and portions of each channel are buffered by the channel change server for use in servicing channel change requests. At block **602**, digital video content is provided to the client via multicasting. At block **604**, multiple consecutive frames of digital video content, including at least one I-frame are buffered. At block **606**, the client receives the digital video content via multicasting. At block **608**, a channel change request is initiated by the client and at block **610** the channel change request is detected by the channel change server. In response to the channel change request, at block **612**, buffered frames for the requested channel are provided to the client via unicasting. In an embodiment, the buffered frames are provided starting at the first buffered I-frame and the digital video content continues to be provided to the client via unicasting until a pre-established condition is met. At block **614**, the client receives the buffered frames via unicasting and at block **616** the buffered frames for the requested channel are played out. Once the pre-established condition is met, a switch is made from unicasting back to multicasting (block **618**). Upon switching from unicasting back to multicasting, digital video content is again provided to the client via multicasting (block **620**). At block **622**, the client receives the digital video content via multicasting instead of unicasting.

In an alternative embodiment of the invention, whether the digital video content is provided via multicasting or unicasting is a function of whether or not the client is in "surf mode." When the client is not in surf mode, digital video content is provided to the client via multicasting and when the client is in surf mode, digital video content is provided to the client via unicasting. FIG. **6** is an exemplary process flow diagram of the surf mode logic. In this example, the client is initially not in surf mode and at block **700**, digital video content is provided to the client via multicasting. As indicated by the "N" branch at decision point **702**, as long as the client is not in surf mode, digital video content continues to be provided via multicasting. Once the client enters surf mode (the "Y" branch at decision point **702**), digital video content is provided to the client via unicasting (block **704**). As long as the client stays in surf mode (the "N" branch at decision point **706**), digital video content continues to be provided to the client via unicasting and any channel change requests are serviced via unicasting (block **708**). Once the client exits surf mode (the "Y" branch at decision point **706**), digital video content is provided to the client via multicasting instead of unicasting. Surf mode can be entered in response to, for example, a channel change request or an explicit command to enter surf mode. Surf mode can be exited in response to, for example, the expiration of a pre-established time period, the expiration of a pre-established time period in which no channel change requests are generated by the client, an explicit exit command, or some other condition such as one of the pre-established conditions identified above. The surf mode status of a client can be, for example, indicated by a state machine or held in memory at the client, the channel change server, the stream server, or any combination thereof.

FIG. **6** can be viewed from the perspective of the server system **104** (e.g., the stream server **106** and/or the channel change server **108**). Alternatively, FIG. **6** can be viewed from the perspective of the client **112** by modifying block **700** to read 'receive' digital video content via multicasting instead of 'provide' digital video content via multicasting and by modifying block **704** to read 'receive' digital video content via unicasting instead of 'provide' digital video content via unicasting.

An embodiment of the process of servicing a channel change request via unicasting is now described with reference to FIGS. **7A-7C**. FIG. **7A** depicts the stream buffer **134** of the stream server **106** and a portion of one of the ingested streams, for example, the digital video content for channel **2**. In an embodiment, the stream buffer buffers up to 1 group of pictures (GOP) worth of each ingested stream, where a GOP is defined as a series of multiple consecutive frames beginning with an I-frame and continuing until the last fame before the next I-frame. As depicted in FIG. **7A**, the buffered portion of the digital video content **172** includes 12 frames **170** consisting of one I-frame, three P-frames, and eight B-frames, although more frames could be buffered. In this embodiment,

the stream buffer is a continual moving buffer whose width is sufficient to assure that at least one I-frame (or I-frame equivalent) is contained within the buffer at any point in time. The stream buffer could alternatively be larger than one GOP, thereby ensuring that more than one I-frame is contained within the buffer at any point in time. Note that the exact location of the I-frame relative to other frames in the buffer will vary with time.

In the convention used in FIG. **7**A, frames are received into the buffer **134** on the left side and flushed from the buffer or streamed out of the buffer from the right side. Therefore, the age of the frames in the buffer decreases from right to left such that the rightmost frame has been buffered for the most amount of time and the leftmost frame has been buffered for the least amount of time.

As described above, a channel change request is serviced by providing digital video content related to the requested channel to the client **112** via unicasting instead of multicasting. In particular, the unicast session starts with the first buffered I-frame and continues with the buffered frames that come after the first I-frame. FIG. **7**B depicts the state of a channel-specific buffer at the time a channel change request is received. In order to achieve a fast channel change, the unicast session begins with the first buffered I-frame and continues with the frames **170** (including B, P, and I frames) that consecutively follow the first I-frame. In an embodiment, the buffered portion of the digital video content is wide enough to include at least one I-frame (or an I-frame equivalent). FIG. **7**C depicts the state of the channel-specific buffer **134** when a channel change request is received at a different time than in FIG. **7**B. FIG. **7**C illustrates that the first buffered I-frame can be located in different positions throughout the buffered frames depending on the time at which the channel change request is received.

In an embodiment, the server system is configured such that the multicast streams are streamed out slightly ahead of any unicast streams. That is, duplicate frames of digital video content will be streamed via multicasting slightly before the corresponding frames are streamed via multicasting. As will be seen, the fact that multicast streams are slightly ahead of their corresponding unicast streams can be used advantageously to transition the client from unicasting to multicasting without skipping a frame.

Switching from unicasting back to multicasting may be accomplished using many different techniques. Although there are many different techniques that can be used to switch from unicasting back to multicasting, it is desirable to make the switch without causing any disruption to the playout of the digital video content by the client **112**. For example, it is desirable to avoid skipping any frames that make up the stream of digital video content. A seamless switch from unicasting back to multicasting can be accomplished, for example, using one of the techniques described below.

A first technique for switching a client from unicasting back to multicasting involves accumulating enough digital video content at the client to bridge the time it takes to transition from receiving the digital video content via unicasting to receiving the digital video content via multicasting. The transition time is a function of the network specifics. For example, in HFC networks that utilize RF for local delivery of digital video content to the clients, the transition time is a function of how long it takes to retune the tuner to a new channel. In IP-based networks, the transition time is a function of how long it takes to join the client to the corresponding multicast group. In accordance with an embodiment of the invention, digital video content is accumulated at the client by temporarily increasing the stream rate of the unicast stream above the playout rate. While the digital video content is being streamed at the increased rate, the amount of digital video content stored in the client's stream buffer grows (as opposed to staying the same, which is the case when the stream rate is the same as the playout rate). That is, the number of frames in the client's stream buffer increases while the stream rate is increased. The stream rate is held at the increased rate until the client accumulates enough frames in its buffer to be able to bridge the time it takes to transition from receiving the digital video content via unicasting to receiving the digital video content via multicasting. For example, if the transition time from unicasting to multicasting is approximately 1 second, then the stream rate is increased until the client is able to accumulate at least 1 second worth of frames in the stream buffer. In an embodiment, the transition time includes the time required to make the switch from unicasting to multicasting plus the maximum delay that can be attributed to waiting for the next I-frame to arrive at the client (e.g., equal to the time of one GOP).

Operation of this technique is described with reference to FIGS. **8** and **9**A-**9**D. Referring to FIG. **8**, the client is initially receiving channel **1** via multicasting **114**. At some point the client requests a channel change to channel **2**. In response to the channel change request and as described above, channel **2** is provided to the client via unicasting **118** .Additional channel change requests to channels **3**, **4**, and **5** are also serviced via unicasting. At some point, the transition back to multicasting is initiated and the stream rate of the unicasting stream is increased so that the client can accumulate enough frames to bridge the transition from unicasting to multicasting. As the client is accumulating frames, the client continues to playout buffered frames that were received via unicasting. When enough additional frames have been accumulated via unicasting, the client disables reception of the unicast stream and initiates a process to terminate unicasting and receive the digital video content related to the current channel via multicasting. During the transition time between when the unicast stream is terminated and before the multicast stream is received, no frames are received at the client and the client plays out the buffered frames that were accumulated in the buffer via unicasting. When the client begins receiving frames via multicasting, the received frames are written into a separate multicast buffer. In an embodiment, an identification is made in the client between the initial multicasting time point and the corresponding time point in the unicast stream. When the unicast stream has played out to this time point, playout switches to the multicast buffer. At this point, the transition to multicasting is complete and the remaining frames in the unicast buffer may be flushed as they are no longer needed for playout. The above-described technique is especially applicable to clients that are limited to receiving a single stream at a time and to cases with limited bandwidth headroom constraint (e.g., DSL).

Exemplary states of the client's **112** stream buffer **154** are illustrated with respect to this technique in FIGS. **9**A-**9**D. FIG. **9**A depicts a unicast buffer that is in steady state. In steady state, the rate of frame playout is roughly equal to the rate of frame buffering and therefore the depth, x, of the buffer is static. It should be noted that in some implementations, the buffer depth is virtually zero before the rate increase. That is, there is relatively little if any buffering of frames. The technique described herein is applicable regardless of whether or not unicast frames are buffered.

FIG. **9**B depicts the unicast buffer after receiving frames at an increased rate for a time interval of t. The depth of the buffer after time interval t is the rate increase (ΔR) multiplied by the time interval t plus the steady state depth x, or buffer

depth=ΔR*t+x. FIG. **9**C depicts the unicast buffer and a multicast buffer that is initiated in response to the switch from unicasting to multicasting. In FIG. **9**C, the unicast buffer is no longer receiving new frames while the multicast buffer is just beginning to receive new frames. The client continues to playout from the unicast buffer until it reaches the point at which it can transition to playing out from the multicast buffer without skipping a frame. As illustrated in FIGS. **9**C and **9**D, the client can stop playing out of the unicast buffer after frame **15** and can begin playing out of the multicast buffer at frame **16**.

Although in this embodiment, the process of switching to multicasting is initiated right after the client accumulates enough frames, in other embodiments, the client may wait to initiate the switch. Although a two buffer implementation is described with reference to FIGS. **9**A-**9**D, other implementations are possible. The above-described technique for switching from unicasting to multicasting applies also to network protocols that use variable bit rate (VBR) schemes as long as the amount of content in the buffer is increased.

A second technique for switching a client from unicasting back to multicasting involves simultaneously providing the digital video content to the client via unicasting and multicasting until the client has buffered duplicate frames (i.e., frames that contain the same digital video content). Once the client has buffered duplicate frames, the client can transition from playing out of a buffer that holds frames received via unicasting to playing out of a buffer that holds frames received via multicasting without skipping a frame. Once the transition back to multicasting is complete, unicasting is terminated and any frames remaining in the unicast buffer are flushed.

Operation of this technique is described with reference to FIGS. **10** and **11**A-**11**D. Referring to FIG. **10**, the client is initially receiving channel **1** via multicasting. At some point the client requests a channel change to channel **2**. In response to the channel change request and as described above, channel **2** is provided to the client via unicasting **118**. Additional channel change requests to channels **3**, **4**, and **5** are also serviced via unicasting. At some point, the transition back to multicasting is initiated and for a limited period of time, a multicast stream is provided to the client concurrent with the unicast stream. Assuming the multicast stream is ahead of the unicast stream in time, the frames received via multicasting have not yet been displayed (i.e., the corresponding frames in the unicast buffer have not yet been played out). The client receives and buffers the digital video content via both unicasting and multicasting until the client begins to buffer duplicate frames via unicasting and multicasting. In an embodiment, the client buffers digital video content received via both unicasting and multicasting for a period of approximately 0.5 to 2 seconds. While the client is receiving frames via both unicasting and multicasting, the frames are buffered in respective unicast and multicast buffers. Once the client begins to buffer duplicate frames, the client can switch to playing out frames from the multicast buffer instead of the unicast buffer without skipping a frame. Once the client switches to playing out frames from the multicast buffer, unicasting to the client can be terminated and the unicast buffer can be flushed.

Exemplary states of the client's stream buffer **154** related to this technique are illustrated in FIGS. **11**A-**11**D. FIG. **11**A depicts the stream buffer with only a unicast buffer active. At this point in time, the client is receiving frames **170** via unicast only. It should be noted that in some implementations the unicast buffer is maintained essentially at zero frames, that is, there is very little if any buffering of frames. The technique described herein is applicable regardless of whether or not unicast frames are buffered.

Once the client begins to receive digital video content related to the current channel via multicasting in addition to unicasting, the multicast frames are buffered in a multicast buffer. FIG. **11**B depicts the stream buffer **154** with both a unicast buffer and a multicast buffer. As depicted in FIG. **11**B, frames **170** an **178** are received into both the unicast and multicast buffers but only played out of the unicast buffer. At some point, the unicast and multicast buffers begin to buffer duplicate frames. For example, FIG. **11**C depicts the unicast and multicast buffers having duplicate frames starting at frame **16**. Once the unicast and multicast buffers contain duplicate frames, the playout controller **164** can transition to playing out from the multicast buffer. In an embodiment, the transition to the multicast buffer can occur at the first duplicate frame (e.g., frame **16** in FIG. **11**C). Alternatively, the transition can be made at any convenient point. FIG. **11**D depicts the stream buffer after the unicast buffer has stopped receiving new frames and after playout has switched to the multicast buffer.

The join operation involves making a unique identification between a frame in the unicast buffer and the corresponding and identical frame in the multicast buffer. For this purpose, the minimum size of data required to effect a matching operation is defined as an Identification Quantum (IDQ). The IDQ represents the smallest amount of data required in order to be able to guarantee that a match between frames is unique. Selection of an IDQ type may be according to a list of choices, known to those skilled in the art. These include, but are not limited to: 1) a CRC or MD5 checksum, or other condensed representation, of the data contained within a single transport packet or within multiple packets, 2) a vector consisting of, but not limited to, one or more of the following fields: a transport packet continuity counter, a picture temporal reference, a picture type (I, P, B, etc.), an absolute stream offset from start, where the vector represents a unique frame start identifier, and 3) an in-stream marker bit or bits, or a set of the same (this is possible if the server is able to manipulate the contents of the multicast buffer).

One consequence of buffering the multicast frames and switching to the multicast buffer once duplicate frames arrive is that the timeline of the displayed digital video content is permanently time shifted by the interval that resulted from the first channel change. This delay can be expected to be on the order of from zero to the maximum GOP size (e.g., 1-2 seconds). The above-described technique is especially applicable to clients that are capable of concurrently receiving two different streams and to cases in which adequate bandwidth headroom is temporarily available (e.g., fiber or dual RF/IP path).

The processor **130**, **150** within the channel change server **108** and client **112** may include a multifunction processor and/or an application specific processor that is operationally connected to the memory **132**, **152**. The processor performs functions, such as executing software code, which are well-known in the field. The memory within the channel change server and the client may include circuits for storing processor-executable instructions, for buffering digital video content, and for storing data structures. Although the processor and memory are depicted as separate functional units, in some instances, the processor and memory are partially or fully integrated onto the same device.

With reference to FIG. **3**, the buffer controller **136**, channel change request detector **138**, channel change request handler **140**, and multicast return controller **142** may be embodied as processor-executable instructions that are stored on processor-accessible memory media. Likewise, With reference to FIG. **4**, the buffer controller **156**, channel change requestor **158**, multicast return controller **162**, and playout controller

164 may be embodied as processor-executable instructions that are stored on processor-accessible memory media. Additionally, although the above-identified functional elements are depicted as separate elements in FIGS. 3 and 4, the elements can be integrated with each other or stored in fragments throughout the server system 104, distribution network 110, and/or clients 112. Processor-executable instructions generally include programs, protocols, data structures, routines, objects, and interfaces that can perform and/or enable certain useful functions.

The above-described techniques for servicing channel change requests can be applied to any type of distribution network that is able to distribute digital video content via multicasting and unicasting. The return to multicasting can be a one-sided operation that is accomplished entirely by the server system 104 and/or the client 112 or it can be a two-sided operation that involves communications between the server system and the corresponding client. The server system depicted in FIGS. 1A-1F can be a single server or a combination of servers. If the server system is a combination of servers, the servers may be co-located or distributed across a network.

In FIGS. 1A-1F, the stream server 106 provides the multicast streams into the distribution network 110. In another embodiment, multicast streaming bypasses the stream server. The above-described technique of switching from providing digital video content to a client 112 via multicasting 114 to providing digital video content to the client via unicasting 118 until a pre-established condition is met is applicable whether the stream server provides the multicast streams into the distribution network or whether multicast streaming bypasses the stream server.

FIG. 12 is a process flow diagram of a method for servicing a channel change request in a digital video network in accordance with an embodiment of the invention. At block 1202, digital video content is provided to a client via unicasting at a first rate. At block 1204, the rate at which digital video content is provided is increased to a second rate. At block 1206, after digital video content has been provided to the client at the second rate for a first time interval, a switch is made to providing the digital video content to the client via multicasting instead of unicasting.

FIG. 13 is a process flow diagram of another method for servicing a channel change request in a digital video network in accordance with another embodiment of the invention. At block 1302, digital video content is provided to a client via unicasting. At block 1304, digital video content is provided to the client via multicasting such that digital video content related to the same channel is provided simultaneously via multicasting and unicasting. At block 1306, once the client begins receiving duplicate frames of digital video content via both unicasting and multicasting, a switch is made to providing the digital video content to the client via multicasting instead of unicasting.

Although the stream server 106 is depicted as a single entity for description purposes, the stream server may be implemented as a single server or multiple servers that act collectively to stream digital video content to the clients.

Although specific embodiments of the invention have been described and illustrated, the invention is not to be limited to the specific forms or arrangements of parts as described and illustrated herein. The invention is limited only by the claims.

What is claimed is:

1. A method for servicing channel change requests in a digital video network that is capable of distributing digital video content to clients via multicasting and unicasting, the method comprising:

providing digital video content to a client via multicasting, the digital video content being related to a first channel;

detecting a channel change request related to the client, the channel change request requesting a change to a second channel;

providing digital video content related to the second channel to the client via unicasting in response to the channel change request;

continuing to provide digital video content related to the second channel to the client via unicasting until a pre-established condition is met, wherein continuing to provide digital video content related to the second channel to the client via unicasting until a pre-established condition is met involves unicasting a sequence of consecutive frames of the digital video content related to the second channel to the client, wherein the unicasting starts from an I-frame and progresses to B and P frames of a group of pictures (GOP); and

switching to providing digital video content related to the second channel to the client via multicasting after the pre-established condition is met.

2. The method of claim 1 wherein the pre-established condition comprises the expiration of a time interval.

3. The method of claim 1 wherein the pre-established condition comprises the expiration of a time interval in which no channel change requests are received.

4. The method of claim 1 wherein the pre-established condition comprises an explicit request to rejoin multicasting.

5. The method of claim 1 wherein the pre-established condition comprises a resource threshold.

6. The method of claim 1 wherein the pre-established condition comprises a benefit threshold.

7. The method of claim 1 further comprising joining the client to a multicast group after the pre-established condition is met.

8. The method of claim 1 further comprising providing digital video content related to a third channel to the client via unicasting before switching to multicasting.

9. The method of claim 8 further comprising providing an indication of a channel change boundary between digital video content related to the second channel and digital video content related to the third channel.

10. The method of claim 9 further comprising flushing undecoded frames from a buffer in response to detecting the channel change boundary.

11. The method of claim 9 further comprising resetting a decoder in response to detecting the channel change boundary.

12. The method of claim 8 wherein providing digital video content related to the third channel to the client comprises splicing the third channel into a current unicast session.

13. The method of claim 1 further comprising servicing subsequent channel change requests related to the client via unicasting before switching to multicasting and until the pre-established condition is met.

14. The method of claim 1 further comprising buffering consecutive frames of digital video content related to the second channel and wherein providing digital video content to the client via unicasting comprises unicasting the buffered consecutive frames.

15. The method of claim 14 wherein unicasting the buffered consecutive frames comprises starting the unicasting at the first buffered I-frame.

16. The method of claim 1 wherein switching from unicasting to multicasting comprises:

providing digital video content to a client via unicasting at a first rate;

increasing the rate at which digital video content is provided to the client via unicasting to a second rate; and

after digital video content has been provided to the client via unicasting at the second rate for a first time interval, switching to providing the digital video content to the client via multicasting instead of unicasting.

17. The method of claim **1** wherein switching from unicasting to multicasting comprises:

providing digital video content to a client via unicasting;

providing digital video content to the client via multicasting such that digital video content is provided simultaneously via multicasting and unicasting; and

once the client begins buffering duplicate frames of digital video content via both unicasting and multicasting, switching to providing the digital video content to the client via multicasting instead of unicasting.

18. A processor accessible non-transitory storage media comprising processor-executable instructions, that when executed, direct a computer system to perform a method for servicing channel change requests in a digital video network that is capable of distributing digital video content to clients via multicasting and unicasting, the method comprising:

providing digital video content to a client via multicasting, the digital video content being related to a first channel;

detecting a channel change request related to the client, the channel change request requesting a change to a second channel;

providing digital video content related to the second channel to the client via unicasting in response to the channel change request;

continuing to provide digital video content related to the second channel to the client via unicasting until a pre-established condition is met, wherein continuing to provide digital video content related to the second channel to the client via unicasting until a pre-established condition is met involves unicasting a sequence of consecutive frames of the digital video content related to the second channel to the client, wherein the unicasting starts from an I-frame and progresses to B and P frames of a group of pictures (GOP); and

switching to providing digital video content related to the second channel to the client via multicasting after the pre-established condition is met.

19. A method for servicing channel change requests in a digital video network that is capable of distributing digital video content to clients via multicasting and unicasting, the method comprising:

providing digital video content to a client via multicasting, the digital video content being related to a first channel;

detecting a channel change request related to the client, the channel change request requesting a change to a second channel;

providing digital video content related to the second channel to the client via unicasting in response to the channel change request, wherein providing digital video content related to the second channel to the client via unicasting in response to the channel change request involves unicasting a sequence of consecutive frames of the digital video content related to the second channel to the client, wherein the unicasting is started from an I-frame and progresses to B and P frames of a group of pictures (GOP); and

detecting a subsequent channel change request related to the client, the channel change request requesting a change to a third channel;

providing digital video content related to the third channel to the client via unicasting in response to the channel change request, wherein providing digital video content related to the third channel to the client via unicasting in response to the channel change request involves splicing the third channel into the unicasting of the second channel and unicasting a sequence of consecutive frames of the digital video content related to the third channel to the client, wherein the unicasting is started from an I-frame and progresses to B and P frames of a group of pictures (GOP);

switching to providing digital video content related to the third channel to the client via multicasting only if a pre-established condition is met.

20. A system for servicing channel change requests in a digital video network that is capable of distributing digital video content to clients via multicasting and unicasting, the system comprising: a server system having a processor and processor-accessible non-transitory storage media comprising processor-executable instructions, that when executed, direct the server system to:

provide digital video content to a client via multicasting, the digital video content being related to a first channel;

detect a channel change request related to the client, the channel change request requesting a change to a second channel;

provide digital video content related to the second channel to the client via unicasting in response to the channel change request; and

continue to provide digital video content related to the second channel to the client via unicasting until a pre-established condition is met, wherein continuing to provide digital video content related to the second channel to the client via unicasting until a pre-established condition is met involves unicasting a sequence of consecutive frames of the digital video content related to the second channel to the client, wherein the unicasting is started from an I-frame and progresses to B and P frames of a group of pictures (GOP); and

switch to providing digital video content related to the second channel to the client via multicasting after the pre-established condition is met.

21. A system for servicing channel change requests in a digital video network that is capable of distributing digital video content to clients via multicasting and unicasting, the system comprising:

a server system having a processor and processor-accessible non-transitory storage media comprising processor-executable instructions, that when executed, direct the server system to:

provide digital video content to a client via multicasting, the digital video content being related to a first channel;

detect a channel change request related to the client, the channel change request requesting a change to a second channel;

provide digital video content related to the second channel to the client via unicasting in response to the channel change request, wherein providing digital video content related to the second channel to the client via unicasting in response to the channel change request involves unicasting a sequence of consecutive frames of the digital video content related to the second channel to the client, wherein the unicasting is started from an I-frame and progresses to B and P frames of a group of pictures (GOP); and

switch to providing digital video content related to the second channel to the client via multicasting only if a pre-established condition is met.

22. A method for servicing channel change requests in a digital video network that is capable of distributing digital video content to clients via multicasting and unicasting, the method comprising:

providing digital video content to a client via multicasting;

identifying the client as being in a surf mode in response to a channel change request;

providing digital video content to the client via unicasting for as long as the client is in the surf mode, wherein providing digital video content to the client via unicasting for as long as the client is in the surf mode involves unicasting a sequence of consecutive frames of digital video content to the client, wherein the unicasting is started from an I-frame and progresses to B and P frames of a group of pictures (GOP); and

switching back to providing digital video content to the client via multicasting once the client exits surf mode.

23. The method of claim **22** further comprising servicing additional channel change requests from the client via unicasting while the client is in surf mode.

24. The method of claim **23** wherein servicing channel change requests via unicasting comprises buffering digital video content related to a requested channel and unicasting the buffered digital video content starting at the first buffered I-frame.

25. The method of claim **22** wherein surf mode is exited in response to one of the expiration of a time period, the expiration of a time period without any channel change requests, and an explicit exit command.

26. A system for servicing channel change requests in a digital video network that is capable of distributing digital video content to clients via multicasting and unicasting, the system comprising:

a server system having a processor and processor-accessible non-transitory storage media comprising processor-executable instructions, that when executed, direct the server system to:

provide digital video content to a client via multicasting;

identify the client as being in a surf mode in response to a channel change request;

provide digital video content to the client via unicasting for as long as the client is in the surf mode, wherein providing digital video content to the client via unicasting for as long as the client is in the surf mode involves unicasting a sequence of consecutive frames of digital video content to the client, wherein the unicasting is started from an I-frame and progresses to B and P frames of a group of pictures (GOP); and

switch back to providing digital video content to the client via multicasting upon the expiration of a pre-established time interval in which no channel change requests are received from the client.

* * * * *