US007380022B2

(12) **United States Patent**
Tell et al.

(10) **Patent No.: US 7,380,022 B2**
(45) **Date of Patent: May 27, 2008**

(54) **METHOD AND APPARATUS FOR TRANSMITTING WIRED DATA VOICE OVER IP DATA AND WIRELESS DATA THROUGH A COMMON IP CORE NETWORK**

(75) Inventors: **Daniel Francis Tell**, Lake Forest, IL (US); **William R. Pierce**, Algonquin, IL (US); **Kaveh Vessal**, Schaumburg, IL (US)

(73) Assignee: **Motorola, Inc.**, Schaumburg, IL (US)

(*) Notice: Subject to any disclaimer, the term of this patent is extended or adjusted under 35 U.S.C. 154(b) by 1085 days.

(21) Appl. No.: **10/034,890**

(22) Filed: **Dec. 28, 2001** (Under 37 CFR 1.47)

(65) **Prior Publication Data**

US 2003/0125021 A1 Jul. 3, 2003

(51) **Int. Cl.**
G06F 15/16 (2006.01)
H04L 12/28 (2006.01)

(52) **U.S. Cl.** **709/249**; 370/390

(58) **Field of Classification Search** 709/202, 709/203, 219, 229, 249; 370/390
See application file for complete search history.

(56) **References Cited**

U.S. PATENT DOCUMENTS

6,337,858 B1 * 1/2002 Petty et al. 370/356
6,597,687 B1 * 7/2003 Rao 370/352
6,678,515 B1 * 1/2004 Gillespie et al. 455/412.1
6,683,870 B1 * 1/2004 Archer 370/356
6,745,244 B1 * 6/2004 Cosgriff et al. 709/227
6,922,721 B1 * 7/2005 Minborg et al. 709/219
6,944,444 B1 * 9/2005 Gillespie et al. 455/417
6,978,004 B1 * 12/2005 Levine 379/211.04
6,993,119 B1 * 1/2006 Zhang et al. 379/88.01
6,997,873 B2 * 2/2006 Bardy 600/300
7,010,599 B2 * 3/2006 Shrinivasan et al. 709/225
7,023,967 B1 * 4/2006 Andersson et al. 379/88.12
7,111,052 B1 * 9/2006 Cook 709/219

* cited by examiner

Primary Examiner—Ario Etienne
Assistant Examiner—Sargon N Nano

(57) **ABSTRACT**

A system for transmitting data through an IP core network so that data may be transmitted from an originating source, through a public switched telephone network (PSTN) and through the IP core network to a land line telephone and a cellular telephone. The system includes an IP core network that is coupled to the PSTN through an interface. The IP core network is also coupled to an access IP network. A radio access network is coupled to the IP core network and the cellular telephone. Upon receipt of data from the originating source, the IP core network simultaneously initiates a ringing of the land line telephone through the access IP network and a paging of the cellular telephone through the radio access network.

27 Claims, 6 Drawing Sheets

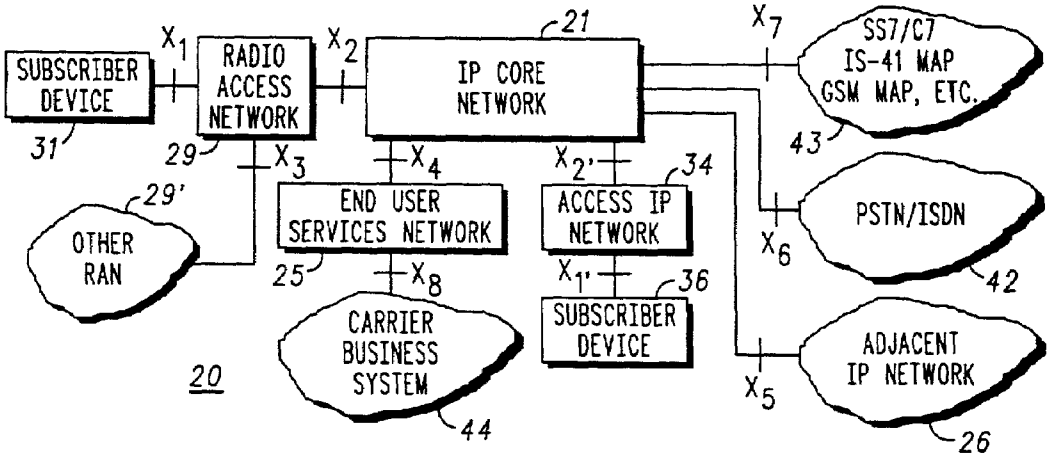

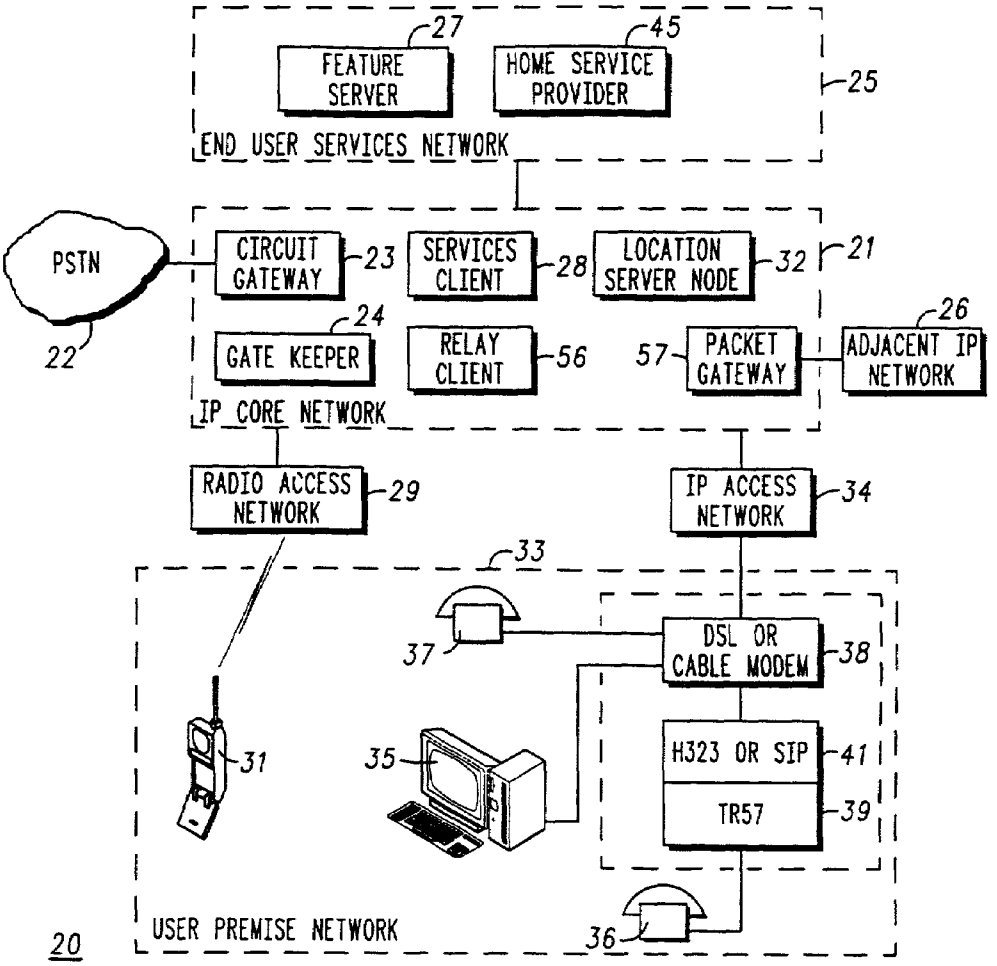
FEATURE SERVER
27
HOME SERVICE PROVIDER
45
25
END USER SERVICES NETWORK
PSTN
22
CIRCUIT GATEWAY
23
SERVICES CLIENT
28
LOCATION SERVER NODE
32
21
GATE KEEPER
24
RELAY CLIENT
56
57
PACKET GATEWAY
ADJACENT IP NETWORK
26
IP CORE NETWORK
RADIO ACCESS NETWORK
29
IP ACCESS NETWORK
34
33
37
DSL OR CABLE MODEM
38
31
35
H323 OR SIP
41
TR57
39
USER PREMISE NETWORK
36
20

FIG. 1

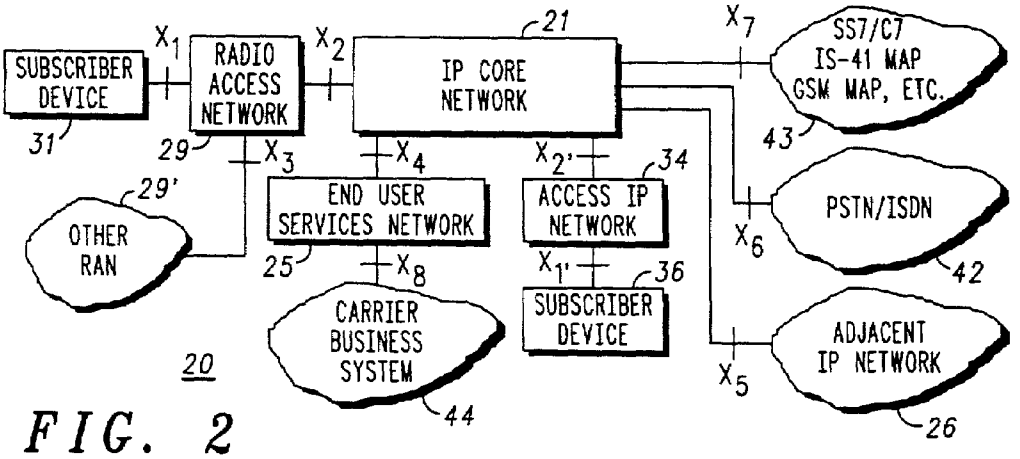
SUBSCRIBER DEVICE
31
X1
RADIO ACCESS NETWORK
29
X2
21
IP CORE NETWORK
X7
SS7/C7
IS-41 MAP
GSM MAP, ETC.
43
29'
OTHER RAN
X3
X4
END USER SERVICES NETWORK
25
X2'
ACCESS IP NETWORK
34
X6
PSTN/ISDN
42
X8
CARRIER BUSINESS SYSTEM
44
X1'
SUBSCRIBER DEVICE
36
X5
ADJACENT IP NETWORK
26
20

FIG. 2

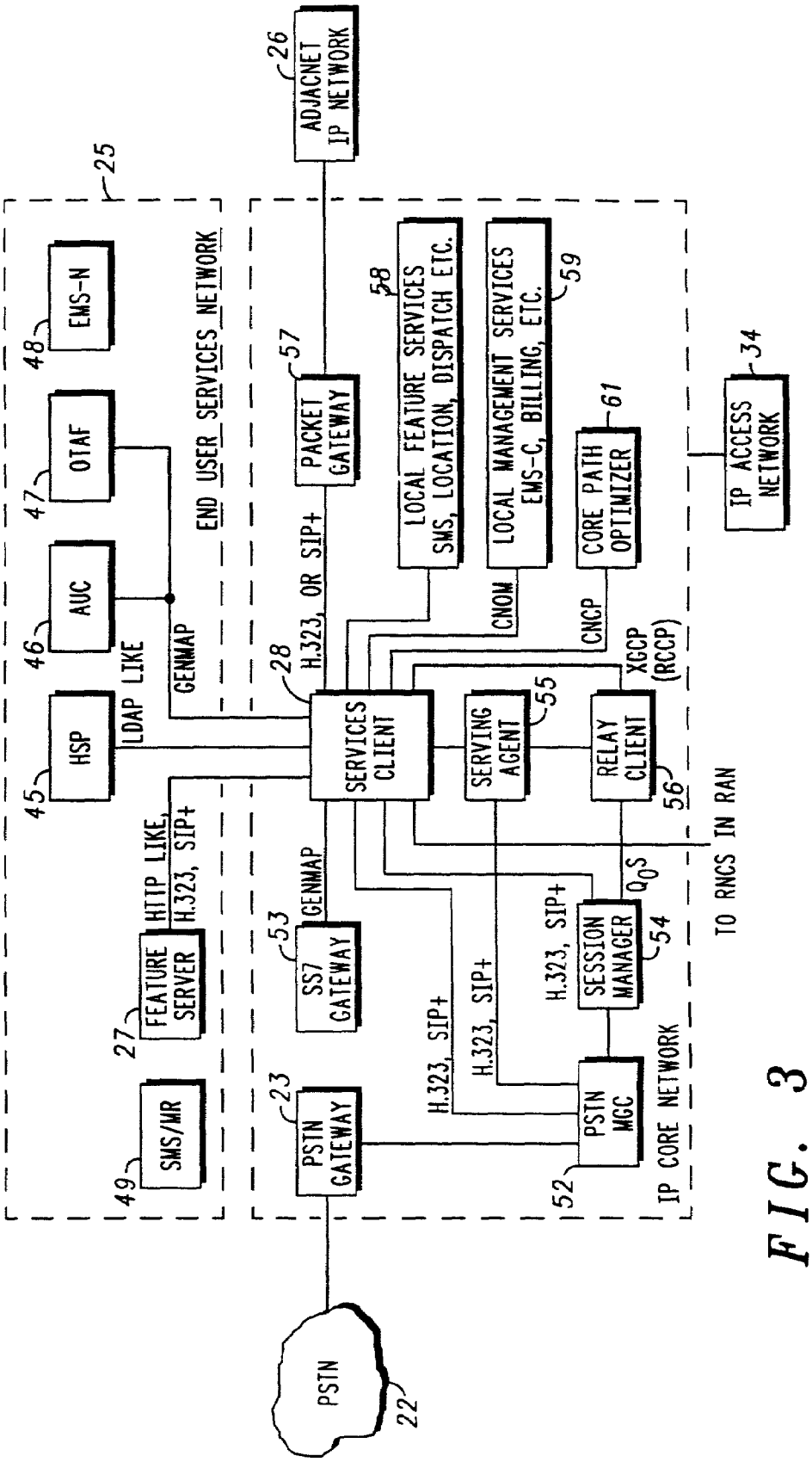
ADJACNET IP NETWORK
26
25
EMS-N
48
OTAF
47
AUC
46
HSP
45
END USER SERVICES NETWORK
LDAP LIKE
GENMAP
HTTP LIKE, H.323, SIP+
FEATURE SERVER
27
SMS/MR
49
PACKET GATEWAY
57
H.323, OR SIP+
28
SS7 GATEWAY
53
GENMAP
PSTN GATEWAY
23
LOCAL FEATURE SERVICES SMS, LOCATION, DISPATCH ETC.
58
LOCAL MANAGEMENT SERVICES EMS-C, BILLING, ETC.
59
CNOM
CORE PATH OPTIMIZER
61
CNCP
IP ACCESS NETWORK
34
XGCP (RCCP)
SERVICES CLIENT
SERVING AGENT
55
RELAY CLIENT
56
TO RNCS IN RAN
Q_0S
SESSION MANAGER
54
H.323, SIP+
H.323, SIP+
H.323, SIP+
PSTN MGC
52
IP CORE NETWORK
PSTN
22

FIG. 3

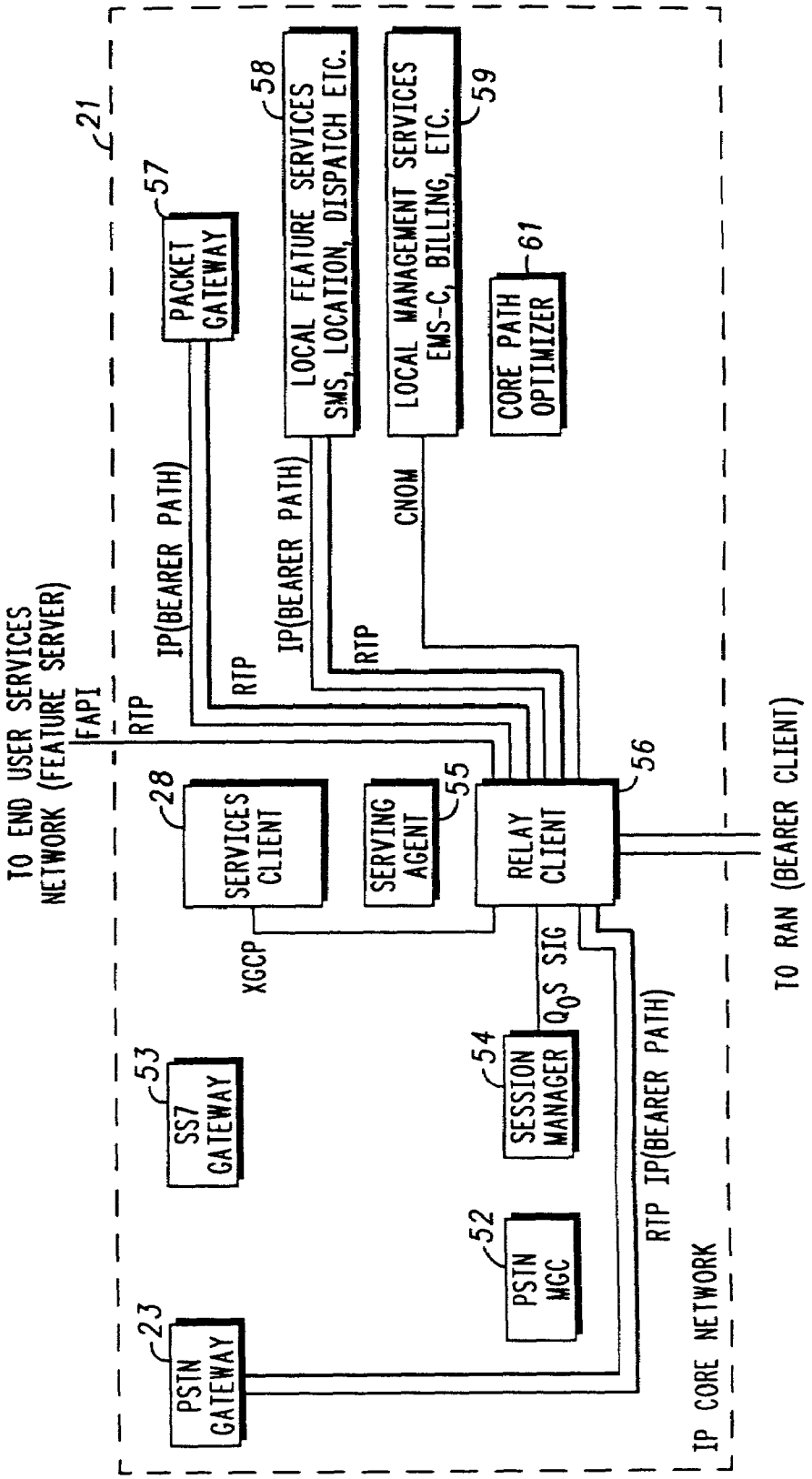
21
TO END USER SERVICES NETWORK (FEATURE SERVER)
FAPI
RTP
IP(BEARER PATH)
RTP
57
PACKET GATEWAY
58
LOCAL FEATURE SERVICES SMS, LOCATION, DISPATCH ETC.
IP(BEARER PATH)
RTP
59
LOCAL MANAGEMENT SERVICES EMS-C, BILLING, ETC.
CNOM
61
CORE PATH OPTIMIZER
28
SERVICES CLIENT
XGCP
55
SERVING AGENT
56
RELAY CLIENT
TO RAN (BEARER CLIENT)
Q_0S SIG
53
SS7 GATEWAY
54
SESSION MANAGER
52
PSTIN MGC
RTP IP(BEARER PATH)
23
PSTIN GATEWAY
IP CORE NETWORK

FIG. 4

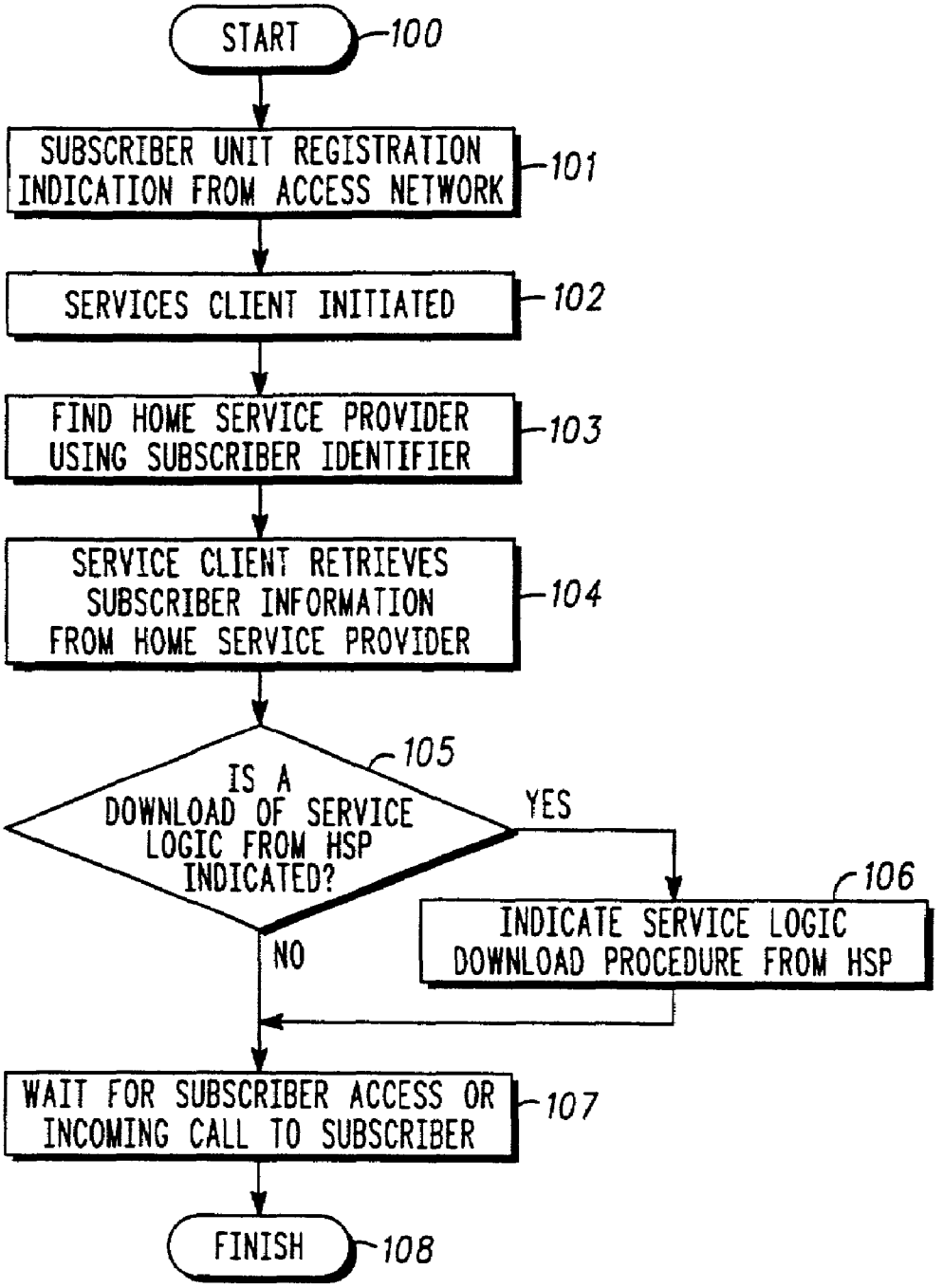
START
100
SUBSCRIBER UNIT REGISTRATION INDICATION FROM ACCESS NETWORK
101
SERVICES CLIENT INITIATED
102
FIND HOME SERVICE PROVIDER USING SUBSCRIBER IDENTIFIER
103
SERVICE CLIENT RETRIEVES SUBSCRIBER INFORMATION FROM HOME SERVICE PROVIDER
104
IS A DOWNLOAD OF SERVICE LOGIC FROM HSP INDICATED?
105
YES
NO
INDICATE SERVICE LOGIC DOWNLOAD PROCEDURE FROM HSP
106
WAIT FOR SUBSCRIBER ACCESS OR INCOMING CALL TO SUBSCRIBER
107
FINISH
108

FIG. 5

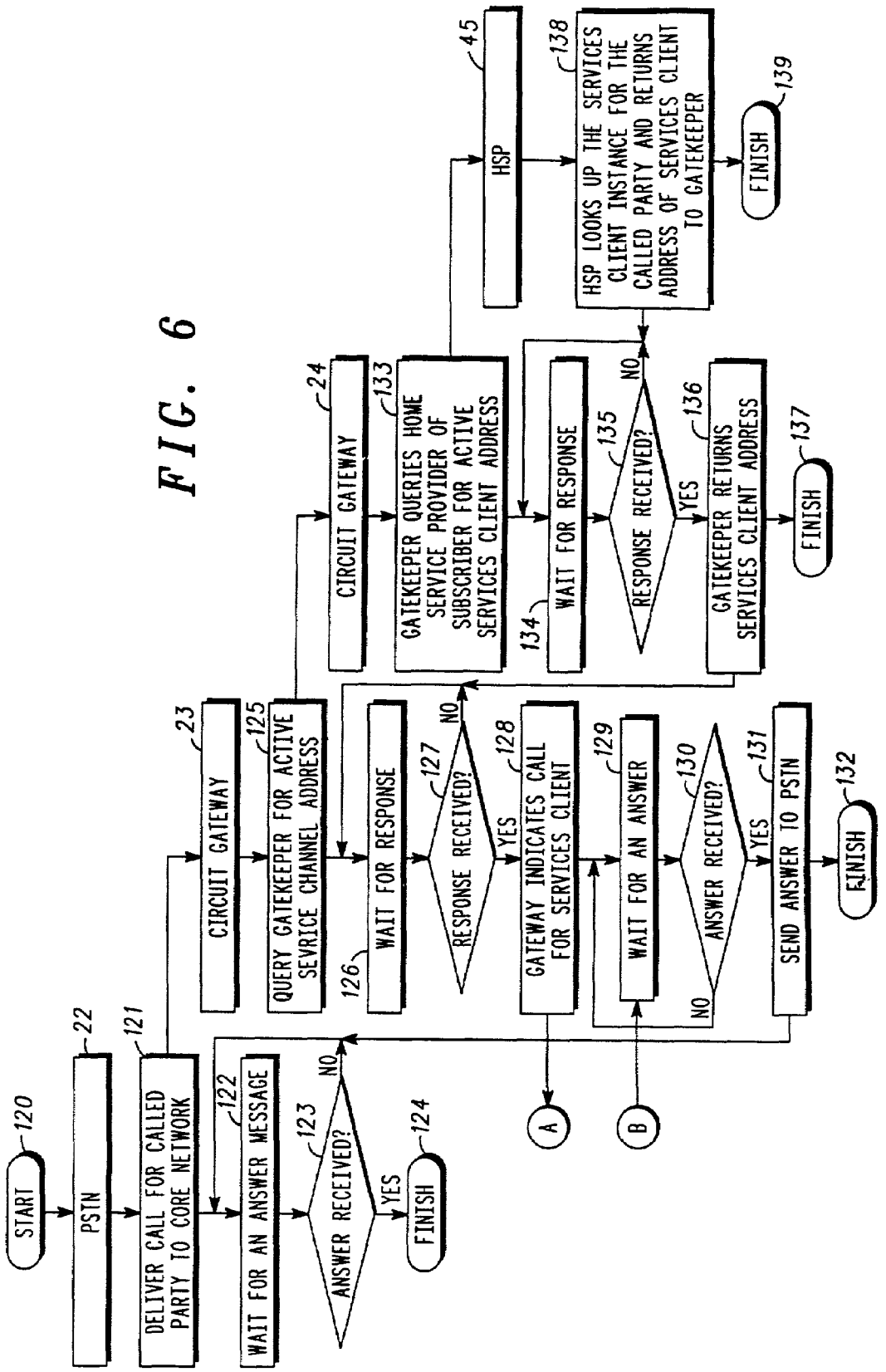
START
120
PSTN
22
DELIVER CALL FOR CALLED PARTY TO CORE NETWORK
121
WAIT FOR AN ANSWER MESSAGE
122
ANSWER RECEIVED?
123
NO
YES
FINISH
124
CIRCUIT GATEWAY
23
QUERY GATEKEEPER FOR ACTIVE SEVRICE CHANNEL ADDRESS
125
WAIT FOR RESPONSE
126
RESPONSE RECEIVED?
127
NO
YES
GATEWAY INDICATES CALL FOR SERVICES CLIENT
128
A
WAIT FOR AN ANSWER
129
B
ANSWER RECEIVED?
130
NO
YES
SEND ANSWER TO PSTN
131
FINISH
132
CIRCUIT GATEWAY
24
GATEKEEPER QUERIES HOME SERVICE PROVIDER OF SUBSCRIBER FOR ACTIVE SERVICES CLIENT ADDRESS
133
HSP
45
WAIT FOR RESPONSE
134
RESPONSE RECEIVED?
135
NO
YES
GATEKEEPER RETURNS SERVICES CLIENT ADDRESS
136
FINISH
137
HSP LOOKS UP THE SERVICES CLIENT INSTANCE FOR THE CALLED PARTY AND RETURNS ADDRESS OF SERVICES CLIENT TO GATEKEEPER
138
FINISH
139

FIG. 6

FIG. 7

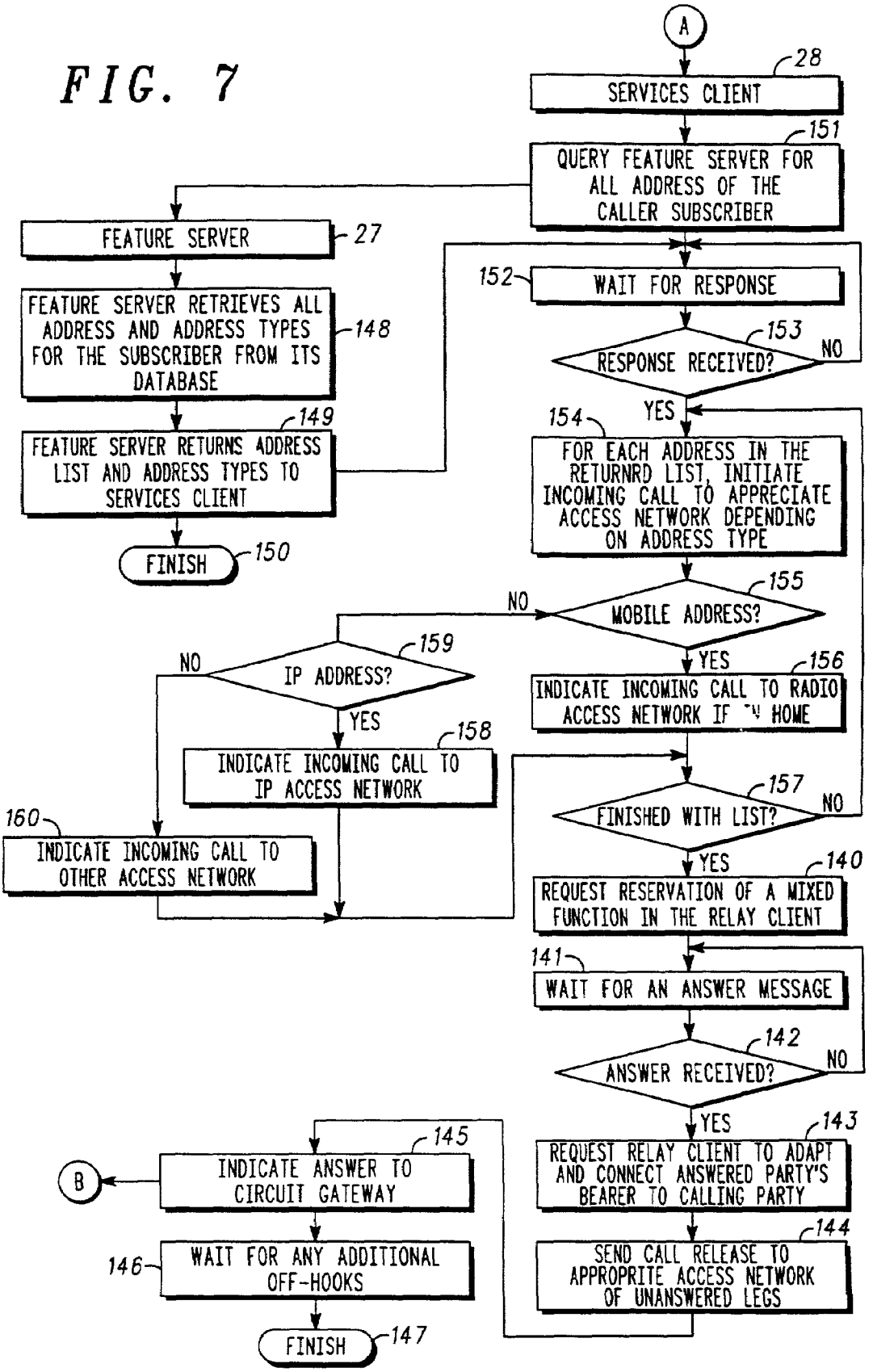
A
28
SERVICES CLIENT
151
QUERY FEATURE SERVER FOR ALL ADDRESS OF THE CALLER SUBSCRIBER
FEATURE SERVER
27
FEATURE SERVER RETRIEVES ALL ADDRESS AND ADDRESS TYPES FOR THE SUBSCRIBER FROM ITS DATABASE
148
149
FEATURE SERVER RETURNS ADDRESS LIST AND ADDRESS TYPES TO SERVICES CLIENT
FINISH
150
152
WAIT FOR RESPONSE
153
RESPONSE RECEIVED?
NO
YES
154
FOR EACH ADDRESS IN THE RETURNRD LIST, INITIATE INCOMING CALL TO APPRECIATE ACCESS NETWORK DEPENDING ON ADDRESS TYPE
155
MOBILE ADDRESS?
NO
YES
159
IP ADDRESS?
NO
YES
156
INDICATE INCOMING CALL TO RADIO ACCESS NETWORK IF IN HOME
158
INDICATE INCOMING CALL TO IP ACCESS NETWORK
157
FINISHED WITH LIST?
NO
YES
160
INDICATE INCOMING CALL TO OTHER ACCESS NETWORK
140
REQUEST RESERVATION OF A MIXED FUNCTION IN THE RELAY CLIENT
141
WAIT FOR AN ANSWER MESSAGE
142
ANSWER RECEIVED?
NO
YES
143
REQUEST RELAY CLIENT TO ADAPT AND CONNECT ANSWERED PARTY'S BEARER TO CALLING PARTY
144
SEND CALL RELEASE TO APPROPRITE ACCESS NETWORK OF UNANSWERED LEGS
145
INDICATE ANSWER TO CIRCUIT GATEWAY
B
146
WAIT FOR ANY ADDITIONAL OFF-HOOKS
FINISH
147

METHOD AND APPARATUS FOR TRANSMITTING WIRED DATA VOICE OVER IP DATA AND WIRELESS DATA THROUGH A COMMON IP CORE NETWORK

FIELD OF THE INVENTION

The present invention relates generally to communication networks, and more particularly, the present invention relates to a method and apparatus for combining wired technology, voice over IP technology and wireless technology by transmitting wired, voice over IP and wireless data through a common IP core network thereby enabling service providers the capability of bundling wired, voice over IP and wireless services as well as other data and video services.

BACKGROUND OF THE INVENTION

Currently, wireless or cellular telephone systems and wired or so-called "land line" telephone systems are operated as separate networks forcing consumers who utilize a wired telephone and a wireless telephone to maintain separate relationships with the wired service provider and wireless service provider. Further, additional providers may be required for long distance service, local service, other data services such as Internet connection and video services such as cable TV. Thus, it is possible for consumers to have relationships with separate service providers for their wired and wireless telephones, cable television, long distance telephone company and Internet access provider.

This multiple service provider system presents several drawbacks to the consumer. Specifically, there is no transparency or connection between a wired telephone and a wireless telephone. Hence, consumers are forced to have at least two telephone numbers if both wired and wireless service is desired. Further, certain features must be duplicated, such as voice mail. Consumers are also imposed with the administrative burden of managing multiple service provider bills along with the multiple phone numbers and multiple voice mail boxes.

Accordingly, there is a need for a single system which can combine wired, wireless and high-speed data technologies in a single network. Such a system would allow consumers to utilize a single service provider for numerous services, simplify billing procedures and improve efficiencies.

BRIEF DESCRIPTION OF THE DRAWINGS

FIG. **1** is a schematic block diagram illustration of a system made in accordance with the present invention.

FIG. **2** is another schematic block diagram of a system made in accordance with the present invention and more particularly illustrating the coupling of the IP core network to the radio access network, end user services network, access IP network, adjacent IP network, PSTN or ISDN and external transport networks.

FIG. **3** is a schematic block diagram illustrating the services client and associated interfaces of the IP core network of FIG. **1** as well as a block diagram illustrating the interaction between the services client and the end user services network of FIG. **1**.

FIG. **4** is a schematic block diagram illustrating the relay client and associated interfaces of the IP core network of FIG. **1**.

FIG. **5** is a schematic flow diagram illustrating the algorithm for subscriber registration.

FIGS. **6** and **7** are schematic flow diagrams illustrating the algorithm for call completion.

DETAILED DESCRIPTION OF THE PRESENTLY PREFERRED EMBODIMENTS

A system **20** for transmitting multiple types of data through an IP core network **21** is illustrated in FIG. **1**. The IP core network **21** is coupled to a PSTN **22** through an appropriate interface, which will be discussed in greater detail below but which is illustrated by way of the gateway **23** and gatekeeper **24**. The IP core network **21** is also linked to additional service provider equipment such as the end user services network **25**. Optionally, the IP core network **21** may be linked to an adjacent IP network **26** or **20** which includes a computer or Internet telephone but such a coupling is not necessary.

The end user services network **25** includes a feature server **27** which may provide a variety of functions including, but not limited to, enabling the consumer to subscribe or purchase service, billing or payments, validation of authorized access and use, transfer of services, one or more value added services, H.323 or session initiation protocol (SIP) endpoint capabilities, user interaction capabilities (e.g. digit/voice recognition, announcement streaming) and web server function.

The services client **28** is explained in greater detail below in FIG. **3** but, briefly, preferably includes a call model that provides a set of triggers and notifications to local service logic. The services client **28** also maintains a subscriber profile information and busy status and includes a service logic control function to control initialization and interaction with the feature servers **27**. The services client **28** may include a call control component that has control of the bearer and data paths. The services client **28** may also include a resource control component that allows access to locally available resources (e.g. tone/announcement or billing servers).

The radio access network **29** provides a wireless voice over IP radio access network that is responsible for the radio channel management and mobility aspects of the wireless handset **31**. The location server node **32** is responsible for the determination of the location of the wireless handset **31** or any radio or cellular user device that is active in the system **20**. The location server node **32** supports both autonomous as well as solicited (on-demand) location requests. The location server node **32** supports both network based as well as wireless handset based and hybrid (network assisted or handset assisted) determination solutions, including global positioning systems—GPS. The location server node **32** performs its positioning role by gathering various radio signature information from the radio access network **29** and the wireless handset **31**. Then, the location server node **32** fuses the information to arrive at a latitude, longitude, possible altitude and a confidence factor. The information is retained in the location server node **32** database while the wireless handset **31** is active in the system **20**. For on-demand location of the wireless handset **31**, the location server node **32** is responsible for coordinating all elements required to perform the location as well as the processing of the resultant signature information. The IP core network **21** provides the capability to identify the geographic location of the wireless handset **31** or active subscriber.

The IP core network **21** is coupled to the user premise network **33** by way of an access IP network **34** as shown in FIG. **1**. The user premise network **33** includes the subscriber devices such as the wireless handset **31**, a computer **35**, a

wired handset **36** and/or an IP telephone **37**. Information is routed to and from the IP telephone **37** and computer **35** by way of a digital subscriber line (DSL) or cable modem, indicated generally at **38**. A TR57 interface **39** is provided for performing analog local loop functions such as dial tone and digit collection and an interface **41** is provided for converting information (control and voice data) into packetized H.323 protocol or SIP protocol used in voice over IP networks. The interface **41** allows the voice traffic to be carried over the data carriage of wire or cable and provides a method to deliver voice traffic to a competitive local exchange carrier (CLEC) without going through a LEC class **5** switch. It will also be noted that, in the DSL case, the interface **38** may be located at a centralized place in the system **20**, in the form of a DSL access multiplexer (DSLAM), for example. While not specifically pictured, the user premise network **33** provides an RJ11 interface for analog telephone/fax wiring and data connection port for the computer **35**. The input/output of the user premise network **33** to the access IP network **34** is provided in the standard protocol for carrying data over the local loop copper (xDSL) or coax or fiber optic cable.

As shown below, the wired infrastructure of the user premise network **33** at the subscriber's home can be integrated into the use of the wireless handset **31** so that features previously associated with the wired handset **36** can be utilized with the wireless handset **31**.

FIG. **2** is another block diagram illustrating the architecture of the system **20** and the interfaces X_1 through X_8 and X_1'-X_2'. At the outset, it will be noted that the system **10** must accommodate a variety of subscriber devices **31**, **36**. Possible subscriber devices will have either no inherent support of voice over Internet protocol (VoIP) to devices that fully integrate support of a VoIP client in the device including IP signaling and data aggregation.

The radio access network (RAN) **29** and access IP network **34** provide the basic transmission, local control and management functions needed for the subscriber devices **31**, **36** to access the resources of the IP core network **21** and the end user services network **25**. As indicated in FIG. **2**, the system **20** is also capable of supporting an alternative or other RAN **29'**.

External circuit switched networks are indicated at **42** and external signaling based upon signaling system number **7** transport networks is indicated at **43**.

The interfaces illustrated in FIG. **2** are as follows. X_1 is the air interface between the subscriber device, such as a wireless handset **31** and the RAN **29**. The RAN **29** can support any one or more of, but not limited to, the following X_1 interfaces and variants thereof. IS-95 A, B, C; GSM; GPRS; WCDMA; UMTS; cdma2000; EDGE; and iDEN. X_1' is the interface point between the subscriber device and the access IP network **34**. By way of example only, the X_1' interface may be a cable modem or DSL modem. Accordingly, the access IP network **34** may include support for any one or more of the following X_1' interfaces and variants thereof: xDSL; VDSL; ADSL; and Cablelabs DOCSIS.

The X_2 interface is an internal interface between the RAN **29** and IP core network **21**. However, the X_2 interface may become an external interface when the RAN **29** is provided in a stand-alone configuration. The RAN **29** and IP core network **21** includes support for the following X_2 interfaces and variants thereof: GSM A; GSM G_b; GSM Network Management; UMTS I_u; CDG IOS (3GPP2 IOS) A1/A2; iDEN EBTS-DPSD & EBTS-MDG; Common Network Management for this reference architecture; and Common Control Protocols used in this reference architecture.

X_2' is the interface point between the access IP network **34** and the IP core network **21**. The access IP network **34** and IP core network **21** includes support for any one or more of the following X_2' interfaces and variants thereof: SGCP/MGCP; H.323/SIP+Extensions; and IP Data Protocols. X_3 is the interface between the RAN **29** and the alternative RAN **29'**. X_3 may be either an internal or external interface and the RAN **29** and the alternative RAN **29'** may include support for any one or more of the following X_3 interfaces and variants thereof: CDG IOS (3GPP2 IOS) A3/A7; UMTS Iur; and iDEN iDAC-iDAC.

X_4 is the interface between the IP core network **21** and the end user services network **25**. X_4 supports the provision of services to the consumer. The IP core network **21** and end user services network **25** may include support for any one or more of the following X_4 interfaces and variants thereof: IS-41C and GSM MAP. X_5 is the interface between the IP core network **21** and the external packet network or adjacent IP network **26**. The IP core network **21** may include support for any one or more of the following X_5 interfaces and variants thereof: TR45.6; UMTS; Mobile PPP; and IP. X_6 is the interface between the IP core network **21** and the external circuit switched network **42**. The IP core network **21** may include support for any one or more of the following X_6 interfaces, including variants thereof: V5.2; TR303; CAS; MFC/R2; Basic Rate ISDN, T1 PRI/E1 PRI; and ATM. X_7 is the interface point between the IP core network **21** and the external signaling based upon the SS7 transport networks **33**. The IP core network **21** may include support for any one or more of the following X_7 interfaces or variants thereof: SS7/C7; IS-41C; GSM MAP; ITU TCAP; ANSI TCAP; GSM CAMEL; AIN; and SDP. X_8 is the interface point between the end user services network **25** and the carrier business system **44**. It will also be noted that the interface X_5 may also be utilized for various management data exchanges. The end user services network **25** may include support for any one or more of the following X_8 interfaces and variants thereof: CORBA/IDL; TMN CMIP Q3; SNMP; and FTP.

As shown in FIG. **3**, the IP core network **21** includes some or all of the following functions, variations thereof as well as other possible functions that will become apparent to those skilled in the art: the PSTN gateway **23**; the PSTN media gateway controller (PSTN MGC) **52**; the SS7 gateway **53** as well as gateways for other supported X_7 interfaces; the session manager **54**; the services client **28**; the serving agent **55**; the relay client **56**; the packet gateway **57**; local feature services such as short message services, location indicator, dispatch, etc.; local management services **59** such as element management system-core network (EMS-C), billing, etc.; and the core path optimizer **61**.

Table 1 provides examples of the interfaces used between the functional elements discussed above in FIGS. **1**-**3**. The functional elements have been abbreviated but the reference numerals used in FIGS. **1**-**3** are indicated.

The protocols used in the architecture of the system **20** include air interface (AI) which is the control interface between the mobile subscriber and the RAN **29**. Client application protocol (CAP) which is the control interface for the serving agent **55**. Core network control protocol (CNCP) which is the control protocol exchanged between the RAN **29** and the IP core network **21**. Core net operation, administration, maintenance and provisioning (CNOM) which is the control interface between the EMS-C and the other managed members of the IP core network **21**. Feature application program interface (FAPI) which is the interface between the feature server **50** and the relay client **56**. Radio

network control protocol (RNCP) which is the control interface used among the elements of the RAN **29**.

Radio network operation, administration, maintenance and provisioning (RNOM) which is the control interface used between the EMS-R and the other managed members of the RAN **29**. End user services net operation, administration, maintenance and provisioning protocol (SNOM) which is the control interface used between the EMS-N and the other managed members of the end user services network **25**. This protocol may be a subset of CNOM discussed above. Finally, generic mobile application part protocol (genMAP) which is the control interface for supporting the mobility management facilities within the IP core network **21**.

As shown in Table 1, a large number of interfaces are specified as H.323/SIP+. The session initiation protocol (SIP) is defined initially in request for comment 2543. As is common with Internet standards, it can be expected that extensions to this protocol will be proposed in future requests for comments (RFC's). The use of SIP+ encompasses the initial RFC 2543 and extensions thereof. Such extensions may include roaming and handoff related functions as well as functions associated with the authentication and security. H.323 is a standard developed under the international telecommunication union (ITU). When H.323 is used, it refers to the H.323 standard and related standards that are under the H.323 umbrella such as H.224.0 for connection establishment. Note that while H.323+ is not indicated, it is expected that there will be continuing extensions of this standard via newer versions (i.e. version 2 is the current standard while version 3 is under development) and later versions will provide extensions as required to support mobile calls.

TABLE 1

	P-GW (57)	SS7-GW (53)	PSTN-CW (23)	PSTN-MGC (52)	SM (54)	SA (55)	SC (28)	CPO (61)	RC (56)
P-GW (57)	—	N/A	N/A	N/A	H323/SIP+	N/A	Bearer Path RTP	CNOM	N/A
SS7-GW (53)	N/A	—	N/A	AIN	N/A	N/A	AIN/MAP	CNCP	N/A
PSTN-GW (23)	N/A	N/A	—	xGCP	N/A	N/A	N/A	N/A	Bearer Path (RTP)
PSTN MGC (52)	N/A	AIN	xGCP	—	H323/SIP+	CAP	H323/SIP+	N/A	N/A
SM (54)	H 323/SIP+	N/A	N/A	H 323 RAS/SIP+	Telephoney Routing (TBD)	CAP	H 323-SIP+	N/A	QoS
SA (55)	N/A	N/A	N/A	CAP	CAP	—	CAP	N/A	N/A
SC (28)	H 323/SIP+	genMAP/AIN	N/A	H 323/SIP+	H 323/SIP+	CAP	—	CNCP	RCCP/xGCP
CPO (61)	N/A	N/A	N/A	N/A	N/A	N/A	CNCP	CNCP	N/A
RC (56)	Bearer Path (RTP)	N/A	Bearer Path (RTP)	N/A	QoS	N/A	RCCP/xGCP	N/A	Bearer Path (RTP)
EMS-C (59)	CNOM	CNOM	CNOM	CNOM	CNOM	CNOM	CNOM	CNOM	CNOM
HSP (45)	N/A	genMAP	N/A	N/A	LDAP-like	N/A	LDAP-like	N/A	N/A
External Network (26, 34, 42, 43)	Bearer Path IP (to PDN)	SS7/ANSI41/MAP (to PSTN)	u-Law a-Law (to PSTN)	ISUP, MPC-R2, ISDN, etc (to PSTN)	N/A	N/A	N/A	N/A	N/A
RAN (29)	N/A	N/A	N/A	N/A	N/A	CNCP	N/A	CNCP (to RNCS)	Bearer Path (to BC)
Feature Server (50)	N/A	N/A	N/A	N/A	H 323/SIP+	N/A	H 323/SIP+ Feature API (HTTP)	N/A	Bearer Path (TCP/UDP/IP)
SMS/MR (49)	N/A	genMAP	N/A	N/A	N/A	N/A	N/A	N/A	N/A
AuC (46)	N/A	genMAP	N/A	N/A	N/A	N/A	N/A	N/A	N/A
OTAF (47)	N/A	N/A	N/A	N/A	N/A	N/A	N/A	N/A	N/A

TABLE 1-continued

	EMS-C (59)	HSP (45)	External Network (26, 34, 42, 43)	RAN (29)	Feature Server (50)	SMS/MR (49)	AuC (46)	OTAF (47)
P-GW-(57)	Bearer Path (RTP to PDN)	N/A	N/A	N/A	N/A	N/A	N/A	N/A
SS7-GW (53)	CNOM	genMAP	SS7/ANSI 41/MAP (to PSTN)	N/A	N/A	MAP	genMAP	N/A
PSTN-GW (23)	CNOM	N/A	n-Law, a-Law (to PSTN)	N/A	N/A	N/A	N/A	N/A
PSTN MGC 52)	CNOM	N/A	ISUP, MPC-R2, ISDN, etc (to PSTN)	N/A	N/A	N/A	N/A	N/A
SM (54)	CNOM	LDAP-like	N/A	N/A	N/A	N/A	N/A	N/A
SA (55)	CNOM	N/A	N/A	CNCP (to RNCS)	N/A	N/A	N/A	N/A
SC (28)	CMP,	LDAP-like	N/A	CNCP (to RNCS)	H 323/SIP +Feature API (HTTP)	N/A	N/A	genMAP
CPO (61)	CNOM	N/A	N/A	CNCP (to RNCS)	N/A	N/A	N/A	N/A
RC (56)	CNOM	N/A	N/A	Bearer Path (RTP to BC)	Bearer Path (RTP)	N/A	N/A	N/A
EMS-C (59)	—	CNOM	N/A	N/A	CNOM	N/A	N/A	N/A
HSP (45)	CNOM	—	N/A	N/A	N/A	genMAP	genMAP	genMAP
External Network (26, 34, 42, 43)	CNOM	N/A	—	N/A	N/A	N/A	N/A	N/A
RAN (29)	N/A	N/A	N/A	—	N/A	N/A	N/A	N/A
Feature Server (50)	CNOM	N/A	N/A	N/A	—	N/A	N/A	N/A
SMS/MR (49)	N/A	genMAP	N/A	N/A	N/A	—	N/A	N/A
AuC (46)	N/A	genMAP	N/A	N/A	N/A	N/A	—	genMAP
OTAF (47)	N/A	genMAP	N/A	N/A	N/A	N/A	genMAP	—

Referring to FIG. **3**, the serving agent **55** operates in the control plane and manages service requests either to or from subscribers or consumers. The serving agent **55** is used to establish an association between the user, the service request and the services client **28**. The serving agent **55** supports the following functions: home service provider look-up; selection of service client hosts; and call signaling address look-up for allocated services clients. The serving agent **55** interacts with the services client via the CAP interface to instantiate or delete services clients. The serving agent **55** interfaces with the session manager **54** via the CAP interface and with the RNCS **62** via the CNCP interface for session initiation. The serving agent responds to requests from the PSTN MGC **52** to locate and/or instantiate the services client **28** using CAP. The serving agent **55** interacts with the EMS-C of the local management services **59** over the CNOM interface.

As shown in FIG. **3**, the services client **28** operates in the control plane and is the IP signaling proxy for the subscriber device. The services client **28** can include a client call model that provides a set of triggers and notifications to local service logic and that maintains a subscriber profile information and busy status. The services client **28** can also include a service logic control function to control initialization and interaction with the feature or feature servers **21**. The services client **28** can also include a call control component that has control of the bearer and data pads. The services client can also include a resource control component that allows access to daily available resources such as

tone/announcements or billing servers. The services client **28** also provides a mobility control function which is a mobility proxy for the mobile subscriber. Such a mobility control function may include an authentication process, registration, hand-offs within the IP core network **21** or RAN **29**, interworking with legacy mobile networks, management of paging to the mobile subscriber or wireless handset **31** and providing billing information for mobile specific actions. As shown in FIG. **7**, the services client **28** interacts with the serving agent **55** over the CAP interface, with the core path optimizer **61** over the CNCP interface, with the relay client **56** over the relay client control protocol interface (RCCP) which is a subset of the xGCP interface. The services client **28** is responsible for control of the call or session. The relay client **56** is responsible for management of the bearer facilities required to support the call or session. The services client **28** controls the usage of the relay client **56** during a given call or session using xGCP.

The services client **28** interacts with the session manager **54** to perform E.164, IMSI, and Cell ID translation to IP address via H.323 or SIP+ and the PSTN MGC **52** using H.323 or SIP+ protocols for service handling. The services client **28** interacts with the home service provider (HSP) **45** via an interface like LDAP to obtain subscriber profile information that may include feature server addresses associated with the subscriber. The services client **28** interfaces with the authentication center (AuC) **46** and the over-the-air facility (OTAF) **47** via genMAP. Signaling for the RAN **29** is carried out by the services client **28** using core network control protocol (CNCP). The services client **28** interacts with the SS7 signaling gateway **53** via genMAP. The services client **28** interfaces with the core path optimizer **61** using CNCP and interfaces with the packet gateway **57** using H.323 or SIP+.

The services client **28** interacts with the feature server or servers **50** via H.323 or SIP+. The services client **28** interacts with the EMS-C of the location management services **59** over the CNOM (core network operations management) interface.

Referring to FIG. **4**, the relay client (RC) **56** operates in both the signaling and bearer planes. The relay client **56** provides an anchor point for the bearer stream and signaling to support mobile subscribers. This function enables a common IP core network **29** architecture to readily support both mobile and fixed devices. The relay client **56** performs a bearer stream routing and selection. The relay client **56** is also responsible for injection of tones and announcements into the bearer stream and provides multi-casting capabilities when required for services such as wiretap, handoff and broadcast.

The relay client **56** would also typically house the mixer function to support multiparty bridging. The mixer function is responsible for distribution of the bearer stream to all parties participating in the call or session. In this distribution function, the mixer must take into account the various bearer capabilities of each endpoint so that both high speed and low speed devices may participate in the dialogue. The simplest role for the mixer occurs in a standard voice call where all parties have the same bearer capabilities. Here, in that it is an IP core network **21**, RTP is used for voice delivery and the mixer is inserted into the stream to effect a bridge. In this role, the mixer will function by taking the input stream from one party and multicasting it to the other parties in the call. If more than one of the parties sources input at the same time, the mixer may support a user or carrier defined priority function, always deferring the audio sourcing to the highest priority port. Alternatively, in the case of voice, it could sum the streams in the PCM domain then convert back to RTP and broadcast the result.

In a more complex scenario where the parties have different bearer capabilities, the role of the mixer expands to tailoring the flows based on bandwidth and device capability. For example, if the source were video and one target bearer was a broadband cable modem and the other a low speed wireless link, the mixer must adapt the output to fit the bandwidth available for each stream.

The services client **28** interfaces with the relay client **56** via xGPC and the relay client **56** interfaces with the session manager **54** via a QoS signaling protocol. The relay client **56** interfaces with the packet gateway **57**, PSTN gateway **23** and feature servers using RTP. The relay client interacts with the EMS-C of the local management services **59** over the CNOM interface. The relay client **56** receives code and configuration data from the EMS-C and the EMS-C is the recipient of alarm/events from the relay client **56**. Further, the EMS-C collects statistics from the relay client **56**.

Referring to FIG. **3**, the PSTN media gateway controller (MGC) **52** supports a call model for the control and interworking between the PSTN gateway **23** and the IP core network **21**. The PSTN MGC **52** manages the call halves according to the specific needs of the signaling on a specific interface. SS7 signaling to the PSTN **22** is controlled by the PSTN MGC **52** interfacing with the SS7 gateway **53**. The bearer path to the PSTN **22** is controlled by the PSTN MGC **52** interfacing with the PSTN GW **23**. The PSTN MGC **52** supports the following functions: appropriate circuit switching and signaling; origination of a call; termination of a call; generation of billing data; collection of billing data; dual-tone multi-frequency generation and detection; progress tone generation; recorded announcement; dialed digit analysis; and inbound call router. The PSTN MGC interacts with the PSTN **42** using appropriate national signaling (SS7 via the SS7 GW **53**). Protocols may include ISUP, MFC-R2, ISDN, etc. The PSTN MGC interfaces with the session manager **54** and services client via H.323 or SIP+. The PSTN MGC **52** interacts with the PSTN **22** by controlling the bearer traffic through the PSTN gateway **23** using xGCP. The PSTN MGC **52** also interfaces with the SS7 gateway **53** via SIGTRAN transporting ISUP and AIN. The PSTN MGC **52** interacts with the serving agent **55** to locate and possibly instantiate services clients via a client application protocol interface (CAP). The PSTN MGC **52** interacts with the EMS-C of the local management services **21** over the CNOM interface.

The PSTN gateway **23** is responsible for accepting inbound calls (voice and data) and delivering outbound calls (voice and data) from and to the PSTN **22**. The PSTN gateway **23** supports any one or more of the following functions: interworking with circuit switch networks (PSTN **22**) for inward and outward service requests; transcoding of the bearer path payload; supporting call progress tones; supporting recorded announcements for call progress indications; providing transcoding and circuit data IWF functions and providing packet to subrate circuit conversion to support handover and mobile to mobile calls to an existing global system for mobile communications (GSM) or code-division multiple access (CDMA) cellular system which uses transcoder rate adaption units (TRAU). As shown in FIG. **3**, the PSTN GW **23** interfaces with the PSTN MGC **52** via xGCP. The PSTN GW **23** interacts with the EMS-C over the CNOM interface.

The SS7 gateway **53** interworks between the internal IP core network **21** and the SS7 network. The SS7 gateway **53**

supports media conversion, protocol conversion, generation of charging data, collection of charging data and signaling endpoint (SSP) for the SS7 network as well as serving as an inbound router across the packet transport network. The SS7 interfaces to the PSTN via SS7. The SS7 gateway interfaces to the services client **28** as well as the short message server/message request (SMS/MR) **49** as well as the home service provider (HSP) **45** via genMAP.

The packet gateway **57** provides interworking with packet data networks. The packet gateway supports any one or more of the following functions: generation of charging data; collection of charging data; media conversion; protocol conversion; bandwidth and QoS negotiation with external packet networks; inbound router; firewall; inbound message discrimination; packet relay; packet routing; address translation; packet encapsulation; tunneling; and tracks location from the data subscriber. The packet gateway **57** interacts with the session manager **54** and the services client **28** via H.323 or SIP+. The packet gateway **57** interfaces with the relay client **56** using real time protocol (RTP) over the bearer path. The packet gateway **57** interacts with the EMS-C of the local management service **59** over the CNOM.

The core path optimizer **61** provides the ability to optimize the bearer and control paths if streamlining is applied to affect inter-system mobility. The core path optimizer **61** may bypass the relay client **56** or move to a relay client in another IP core network **21**. It may also include the release of local IP core network resources.

The core path optimizer (CPO) **61** interacts with the services client via CNCP and with the radio network control server (RNCS) **62** of the RAN **29** via CNCP. The CPO **61** also interacts with the EMS-C of the local management services **59** via the CNOM.

The feature server or feature servers shown at **27** in FIG. **3** usually perform functions within the control or bearer paths which create subscriber services such as call waiting, voice mail, dispatch, etc. The feature servers **27** may be provided by the wireless service provider in which case there are local feature servers. The feature servers **27** may be provided by a third party service provider existing in the end user's services network **25**. The feature server **27** may include any one or more of the following functions: subscription or purchase of service; billing or payment; validation of authorized access and use; transfer of services; one or more value added services; H.323/SIP+ endpoint capabilities; user interaction capabilities (e.g. digit/voice recognition, announcement streaming); and web server function. The feature servers **50** communicate with the services client **28** and session manager **54** using H.323 or SIP+. The feature server communicates with the EMS-C of the local management services **59** over the CNOM.

The location service node is a part of the local feature services **58** and is responsible for determination of the location of any radio user active device in the system **20**. The location service node (LSN) supports both autonomous as well as solicited (on-demand) location requests. The location service node supports both network based as well as handset based (i.e. GPS) determination solutions.

The LSN performs its positioning role by gathering various radio signature information from the RAN **29** and the handset, then fusing this information to arrive at a latitude, longitude and possible altitude and a confidence factor. The information is retained in the LSN database while the mobile handset **31** is active in the system **20**. For on-demand location, the LSN is responsible for coordinating all elements required to perform the location function as well as the processing of the resultant signature information. The IP core network **21** provides the capability to identify the geographic location of the active subscriber. The LSN interacts with the element management system-core network (EMS-C) over the CNOM.

The local management services function **59** may also include a billing server in addition to the EMS-C. The home service provider (HSP) **45** is the master database for a given subscriber. The HSP **45** interacts with the SS7 gateway **53** and over the air facility (OTAF) **47** via genMAP. The HSP **45** interacts with the element management system-network (EMS-N) **48** over the network management interface.

The authentication center (AuC) **46** is the repository for security data related to the mobile subscriber. It includes a repository of subscriber security data, administration of subscriber security data and generation of per execution security sets. The AuC **46** interfaces with the OTAF **47**, HSP **45** and SS7 gateway **53** via genMAP, which provides secure transmission of the application data. The AuC **46** also interacts with the EMS-N **48** over the network interface.

The SMS/MR (short message service center/message register) **49** provides the message center functions for point to point message services which includes message creation, message relay, message storage, message delivery, tracking of delivery status of messages, generation of charging data and transfer of charting data. The SMS/MR **49** interfaces with the HSP **45** via the genMAP interface for the routing of messages and it obtains the routing address for the subscriber from the HSP **45**. The SMS/MR **49** interfaces with the SS7 gateway **53** via genMAP as well. The SMS/MR **49** interacts with the EMS-N **48** over the network management interface. The SMS/MR **49** interfaces with the services client **28** via the genMAP interface for message delivery. The message is passed to the subscriber via the CNCP (core network control protocol) resources.

The over the air facility (OTAF) **47** allows the subscriber unit to be activated and provisioned remotely via the air interface. The OTAF **47** provides the service provider with the ability to provide active equipment over the air, which eliminates the need for subscribers to go to a service provider facility. The OTAF **47** supports the termination of over the air calls, initiation of data sessions to update the subscriber unit, initiation of short messages to update the subscriber unit, forwarding of calls, for example to IVR servers when appropriate, acquiring subscriber security information from the AuC **46**, delivering security information to the subscriber device, assignment of subscriber identity, such as name, E.164, E.212 and H.323 ID, collection of subscriber data need to validate activation and generation of transfer subscriber profile. The OTAF **47** interacts with the HSP **45**, AuC **46** and the services client **28** via the genMAP interface or, in the case of the HSP **45**, the IP interface. The OTAF interacts with the EMS-N **48** over the network management interface.

The EMS-N (element management system-network applications) **48** provides element management facilities for the service platform of the wireless access network which include the HSP **45**, AuC **46**, SMS/MR **49**, feature server **50** and OTAF **47**. The EMS-N **48** is based upon a common element management environmental platform that includes both hardware and software. The platform offers a common distributed object interface, a distributed data-spaced environment and a common set of management application interfaces. The EMS-N **48** provides the basic element management for the end user services network **25** elements. The EMS-N **48** interacts with the various end user services network elements over the network management interface.

With the aforementioned apparatus in place, it is now possible to effect a unified wired/wireless service offering from two previous disparate networks. For purposes of clarification, the following paragraphs will detail a call flow to the IP core network **21** that will involve the PSTN, the wireless access network and the wired network. The service aspect described will be that of the wireless phone behaving as a cordless phone when in the home and as a cellular phone outside the home. In cordless mode, the phone will behave as a peer to the wired phones. Two flows will be illustrated, the first describing the subscriber registration process and the second detailing the actual service flow.

Upon entering a wireless access system, the mobile device must register to inform the system of its presence, thereby enabling service delivery. FIG. **5** depicts the registration process. The process begins with the terminal initiating a registration indication to the network based on the appropriate air interface protocol, step **101**. When the IP core network **21** receives the registration notification, it creates an instantiation of the services client **28** to serve as the proxy for this terminal in the serving network of step **102**. From an algorithmic perspective, this step involves allocating memory and a state machine to serve as a proxy for the terminal. The next step involves identifying the home service provider (HSP) **45** for this particular subscriber at step **103**, then updating the feature profile for the subscriber in the serving system at step **104**. This updating may involve downloading of service logic from the HSP **45** at steps **105** and **106**. Upon completion of the instantiation and updating, the services client **28** enters a dormant state until further activity occurs related to that subscriber at step **107**. At this point, call delivery may occur in the serving network.

FIG. **6** depicts what actually occurs during a PSTN initiated call to a subscriber of this service who has both a wired and wireless unit. In this particular case a land to mobile call is described, with the PSTN **22** delivering the call to the subscribers home network, which for this case is also the serving radio access network. This example can be readily extended to cover the case where serving radio network and ingress network are not the same (roaming mobile).

The flow begins with a PSTN subscriber calling a subscriber currently served by the IP network **21** at step **121**. The PSTN **22** delivers the call to the circuit gateway **23**. The circuit gateway, upon receipt of the digits, must query the gatekeeper **24** for the address of the active instance of the services client **28** at step **125**. The gatekeeper **24** queries the HSP **45** for the active services client address **28** at step **133** and waits for the response at Step **134**. The HSP **45** receives the gatekeeper query, accesses its database for the location of the services client **28**, which will be found in the serving system, and returns the appropriate addressing information at step **138**. When the gatekeeper **24** receives the response from the HSP **45** at step **135**, it returns the addressing information to the circuit gateway **23** at step **136**. The circuit gateway **23** then initiates a call session with the aforementioned instance of the services client **28** at step **128**. It may also apply progress tones as appropriate to the calling party.

Turning to FIG. **7**, when the services client **28** receives the call indication, it first must determine the physical means by which the subscriber may be reached at step **151**. It queries the feature server **27** for the physical routing information. Note that this step may be omitted if the address information were downloaded at the registration procedure. The feature server **27** determines the number of means by which the subscriber may be reached and the network addresses at step **148**, then returns that information to the services client **28** in Step **149**. The services client **28** receives the response in Step **153**. For each address enclosed in the list, the services client **28** must then instruct each network serving that address to instantiate a link and alert the called party at step **154**. The services client **28** parses between mobile networks at step **155**, IP networks at step **159** or other networks at step **160**. For each network type, the appropriate signaling is issued to establish the link. For mobile networks, physical location is used to determine if the party is considered "home" or not at step **156**. This is determined by querying the LSN to match the actual physical location of the subscriber handset with his preassigned geographical "home" zone. If the unit is inside of the preassigned geographical area, it is considered "home." If "home," or "extension mode," the party is alerted. If not home, an alert is not sent to the mobile unit. When the list of physical links is exhausted, Step **157**, a mixer function is reserved to serve the call at step **140**. The services client **28** then waits for indication of answer from the called parties at step **141**. Upon receipt of the first answer at step **142**, a connection is established. The services client **28** then releases the remaining parties at step **144**, and indicates answer to the circuit gateway **23** at step **145**. The services client then enters a monitor state at step **146**, where it will look for any other off-hook indications from any parties that were alerted in Step **154**. If an off-hook occurs, that party would be bridged into the current call, with the mixer providing the appropriate audio. In this manner, the parties act as extensions with respect to one another.

The above example relied on the use of cellular roaming to establish and track the location of the subscriber. Mobile IP could and would also be used to track, or register subscriber location. Additionally, in the above example, the call was a voice call. The concepts disclosed above can readily be extended to data calls as well.

The preferred embodiments of the invention are intended to be illustrative and should not be taken as limiting of the broad scope of the invention set forth in the following claims.

What is claimed:

1. A system for transmitting data through an IP core network so that data may be transmitted from an originating source, though a public switched telephone network (PSTN) and through the IP core network to at least one of a wired handset and a wireless handset, the system comprising:

an IP core network,

the IP core network coupled to the PSTN through an interface, the IP core network also coupled to an access IP network,

a radio access network coupled to the IP core network and the wireless handset,

a register of wired handsets and wireless handsets from among the at least one of a wired handset and a wireless handset and the registered wired handsets and wireless handsets are on the register when such registered wired handsets and wireless handsets are accessible within IP core network and the radio access network and wherein the register is compiled by the handsets when the handsets become accessible on the network, and

upon receipt of data from the originating source, the IP core network simultaneously initiating a ringing of the wired handset available on the register through the access IP network and a paging of the wireless handset available on the register through the radio access network.

2. The system of claim 1 wherein, upon receipt of an answer from a plurality of the handsets, the IP core network bridging an audio signal between the wired and wireless handsets.

3. The system of claim 1 wherein, upon receipt of an answer from a plurality of the handsets, the IP core network bridging an audio signal between the wireless handset and a plurality of wired handsets.

4. The system of claim 1 wherein, upon receipt of an answer from a plurality of the handsets, the IP core network bridging an audio signal between a plurality of wired handsets.

5. The system of claim 1 further comprising a user premise network coupled to the IP core network, the user premise network comprising at least one component selected from the group consisting of a modem, a cable modem, an ISDN modem and a DSL modem.

6. The system of claim 1 wherein the interface comprises a gateway and a gatekeeper.

7. The system of claim 1 wherein the interface comprises an H.323 gateway and an H.323 gatekeeper.

8. The system of claim 1 wherein the interface comprises a SIP server and an IP/PSTN gateway.

9. The system of claim 1 wherein the IP core network further comprises a location server node which determines the location of the wireless handset,

and the IP core network, upon receipt of a signal from the location server node that the wireless handset is within a predetermined geographical area, simultaneously initiates the paging of the wireless handset through the radio access network and the ringing of the wired handset.

10. The system of claim 9 wherein the IP core network initiates a ringing of the wired handset through the access IP network.

11. The system of claim 1 wherein the IP core network further comprises at least one feature server for providing call features for data being communicated from the IP core network to the wired and wireless handsets.

12. The system of claim 1 further comprising a user premise network comprising a TR57 interface for providing analog loop functions.

13. The system of claim 12 wherein the TR57 interface is coupled to an H.323 interface for converting voice data transmitted from the wired handset into H.323 protocol.

14. The system of claim 12 wherein the TR57 interface is coupled to a SIP interface for converting voice data transmitted from the wired handset into SIP protocol.

15. The system of claim 7 wherein the H.323 gateway and H.323 gatekeeper are a part of the IP core network.

16. The system of claim 1 further comprising a user premise network comprising a RJ11 interface, a modem and a personal computer wherein the RJ11 interface is coupled to a modem and a personal computer.

17. The system of claim 1 wherein the access IP network is coupled to an Internet telephone and,

upon receipt of data from the originating source, the IP core network simultaneously initiating a ringing of the wired handset, a paging of the wireless handset through the radio access network and a sending of a call message to the Internet telephone through the access IP network.

18. The system of claim 1 wherein the access IP network is coupled to computer and,

upon receipt of data from the originating source, the IP core network simultaneously initiating a ringing of the wired handset, a paging of the wireless handset through the radio access network and a sending of a call message to the computer through the access IP network.

19. The system of claim 1 wherein the IP access network is coupled to a multimedia terminal.

20. A method for simultaneously paging a wireless handset and ringing a wired handset, the method comprising:

providing an IP core network that is coupled to a public switched telephone network (PSTN) through an interface, the IP core network also being coupled to an access IP network,

providing a radio access network coupled to the IP core network and the wireless handset,

receiving data at the IP core network from the PSTN,

registering a wireless handset when such wireless handset is accessible on the radio access network and a wired handset when such wired handset is accessible on the IP network, and

simultaneously initiating a ringing of the wired handset through the access IP network and a paging of the wireless handset through the radio access network.

21. The method of claim 20 further comprising

providing a location server node,

determining a location of the wireless handset,

prior to simultaneously initiating the paging of the wireless handset through the radio access network and the ringing of the wired handset through the access IP network, sending a signal to the IP core network from the location server node indicating that the wireless handset is within a predetermined geographical area.

22. The method of claim 21 wherein the location server node forms part of the IP core network.

23. The method of claim 20 further comprising

providing at least one feature server for providing call features for data being communicated from the IP core network to the wired handset and the wireless handset.

24. The method of claim 20 wherein the feature server forms a part of the IP core network.

25. The method of claim 20 wherein the access IP network is coupled to an Internet telephone and,

upon receipt of data from the originating source, the IP core network simultaneously initiating a ringing of the wired handset, a paging of the wireless handset through the radio access network and a sending of a call message to the Internet telephone through the access IP network.

26. The system of claim 20 wherein the access IP network is coupled to computer and,

upon receipt of data from the originating source, the IP core network simultaneously initiating a ringing of the wired handset, a paging of the wireless handset through the radio access network and a sending of a call message to the computer through the access IP network.

27. A system for transmitting data through an IP core network so that data may be transmitted from an originating source, though a public switched telephone network (PSTN) and through the IP core network to at least one of a wired handset and a wireless handset, the system comprising:

an IP core network comprising a location server node,

the IP core network coupled to the PSTN through an interface, the IP core network also coupled to an access IP network, the interface comprising a gateway and a gatekeeper,

a radio access network coupled to the IP core network and the wireless handset,

a user premise network coupled to the IP core network,

a register of wired handsets and wireless handsets from among the at least one of a wired handset and a wireless handset and the registered wired handsets and wireless handsets are on the register when such registered wired handsets and wireless handsets are accessible within the IP core network and the radio access network and wherein the register is compiled by the handsets when the handsets are accessible on the network, and

upon receipt of data from the originating source, the location server node determining the location of the wireless handset and, upon receipt of a signal from the location server node that the wireless handset is within a predetermined geographical area, the IP core network simultaneously initiating a paging of the wireless handset through the radio access network and a ringing of the wired handset and,

upon receipt of an answer from a plurality of the handsets, the IP core network bridging an audio signal between the wired and wireless handsets.

* * * * *