IN THE UNITED STATES DISTRICT COURT
FOR THE EASTERN DISTRICT OF TEXAS
MARSHALL DIVISION

NETSOCKET, INC., Plaintiff, v. **CISCO SYSTEMS, INC.,** Defendant.	**JURY TRIAL DEMANDED** Case No.

COMPLAINT FOR PATENT INFRINGEMENT

Plaintiff NetSocket, Inc. ("NetSocket") for its Complaint against Defendant Cisco Systems, Inc. ("Cisco"), alleges as follows:

NATURE OF THE ACTION

1. This is an action brought by NetSocket for infringement of U.S. Patent No. 7,616,601 (the "'601 Patent") and U.S. Patent No. 7,190,698 (the "'698 Patent") (collectively, the "Asserted Patents"), arising under the patent laws of the United States, 35 U.S.C. §§ 271 and 281.

PARTIES

2. NetSocket is a corporation organized and existing under the laws of the State of Delaware with its principal place of business at 7208 Chardonnay Drive, Frisco, Texas 75035.

3. NetSocket was founded in 2006 by three individuals who formerly worked at Chiaro Networks. Chiaro Networks developed certain routing software that it licensed to businesses. NetSocket initially licensed, but later purchased, the Chiaro routing software. The product and business strategy was to leverage the substantial investment at Chiaro in its routing software and repurpose it as a service assurance provider for real-time services, e.g., voice, video, and data, running over internet protocol (IP) networks.

4. NetSocket's strategy was to passively peer with service provider routers and correlate real-time sessions with the path traveled in the IP network. By doing so, NetSocket could see problematic data links with congestion, packet drop, high latency, etc., making it easier to troubleshoot call or session quality. Such a capability did not exist previously and attracted attention from the likes of Microsoft, who became an early partner with NetSocket. See below:

businesswire
A BERKSHIRE HATHAWAY COMPANY

HOME SERVICES NEWS EDUCATION ABOUT US

Search

NetSocket Achieves Microsoft Lync® ISV Program Qualification

NetSocket Cloud Experience Manager (CEM) enables an optimized Lync user experience in enterprise and service provider environments

January 30, 2013 09:00 AM Eastern Standard Time

PLANO, Texas--(BUSINESS WIRE)--NetSocket, a leading provider of network service assurance solutions for unified communications (UC) in enterprise and service provider environments, today announced its Cloud Experience Manager (CEM) has been tested and qualified as an ISV in Microsoft's Unified Communications Open Interoperability Program for Lync Communications Server.

https://www.businesswire.com/news/home/20130130005800/en/NetSocket-Achieves-Microsoft-Lync%C2%AE-ISV-Program-Qualification

5. Approximately two years later, in 2008, NetSocket acquired Operax AB, a Swedish company that had accomplished several industry firsts. In particular, Operax was very aggressive in working on partnerships with the likes of Ericsson, Bridgewater Systems, Siemens Nokia Systems, and several others. Operax also conducted trials with many global service providers.

6. On information and belief, Cisco is a corporation organized and existing under the laws of Delaware with its principal place of business located at 170 West Tasman Drive, San Jose, California 95134.

JURISDICTION AND VENUE

7. This action arises under 35 U.S.C. §§ 100, *et seq.*, and this Court has jurisdiction over the subject matter of this action under 28 U.S.C. §§ 1331 and 1338(a).

8. This Court has personal jurisdiction over Cisco in this action because Cisco has committed acts within this District giving rise to this action.

9. This Court has personal jurisdiction over Cisco in this action because Cisco has established minimum contacts with this forum such that the exercise of jurisdiction over Cisco would not offend traditional notions of fair play and substantial justice.

10. Cisco, directly and/or through subsidiaries or intermediaries, has conducted business in this District, the State of Texas, and elsewhere in the United States.

11. Cisco, directly and/or through subsidiaries or intermediaries has committed and continues to commit acts of infringement in this District by, among other things, making, using, importing, offering to sell, and selling products and providing services that infringe the Asserted Patents, and/or has induced acts of patent infringement by others in this judicial district, the State of Texas, and elsewhere in the United States.

12. Venue is proper in this Court under 28 U.S.C. §§ 1391 and 1400(b).

13. On information and belief, Cisco has regular and established physical presences in this District, including, but not limited to, ownership of or control over property, inventory, or infrastructure.

14. On information and belief, Cisco maintains several places of business within the State of Texas.

15. On information and belief, Cisco maintains a place of business at 2250 E President George Bush Highway, Richardson, Texas 75082.

16. On information and belief, Cisco maintains a data center at 2260 Chelsea Blvd., Allen, Texas 75013.

17. On information and belief, in 2019 the Collin County Appraisal District assessed the property located at 2250 E President George Bush Highway and 2260 Chelsea Boulevard at a combined value of over $300,000,000.

18. On information and belief, Cisco is registered to do business in the State of Texas.

19. On information and belief, Cisco may be served with process through its registered agent, Corporation Service Company dba CSC – Lawyers Incorporating Service Company, 211 E. 7th Street, Suite 620, Austin, Texas 78701-3218.

THE ASSERTED PATENTS

20. The '601 Patent, entitled "Network Resource Manager In A Mobile Telecommunication System," was duly and legally issued by the U.S. Patent and Trademark Office on November 10, 2009. A true and correct copy of the '601 Patent is attached hereto as Exhibit A.

21. The '698 Patent, entitled "Network Optimisation [sic] Method," was duly and legally issued by the U.S. Patent and Trademark Office on March 13, 2007. A true and correct copy of the '698 Patent is attached hereto as Exhibit B.

22. NetSocket is the current owner and assignee of the Asserted Patents.

23. The claims of the Asserted Patents are valid and enforceable.

24. As described in more detail below, Cisco infringes the Asserted Patents by making, using, selling, importing, and offering to sell routers running Cisco IOS 15 and above and related networking components, and all like products, collectively "the Accused Products," in Texas and throughout the United States.

COUNT 1

(Infringement of U.S. Pat. No. 7,616,601)

25. NetSocket repeats and re-alleges all the allegations above as if fully set forth herein.

26. Cisco has infringed and continues to infringe one or more claims of the ’601 Patent by making, using, offering to sell, selling, and/or importing into the United States infringing devices without authority in violation of 35 U.S.C. § 271(a). Cisco has actively induced infringement of the ’601 Patent, and continues to induce infringement, without authority in violation of 35 U.S.C. § 271(b). Cisco has also contributed to the infringement of the ’601 Patent and continues to contribute to the infringement of the ‘601 Patent in violation of 35 U.S.C. §271(c).

27. Cisco has and continues to infringe, directly and indirectly, literally and under the doctrine of equivalents, at least claim 1 of the ’601 Patent at least by making, using, offering to sell, importing, and/or selling end-to-end Quality of Service (QoS) within a mobile telecommunication system.

28. For example, upon information and belief, Cisco manufactures, imports, sells and offers to sell a Multiprocessor WAN Application Module (MWAM) and Catalyst 6500 and 7600 Series routing platforms, which when used together provide Quality of Service (QoS) within a mobile telecommunication system (the “Cisco QoS System”) in the United States and encourages distributors to sell, offer to sell, and use, and encourages Cisco’s customers to use, the Cisco QoS System.

29. Cisco has had knowledge of and notice of the ’601 patent and its infringement since before the filing of this Complaint. Cisco offers to sell the Cisco QoS System in this District and does so with knowledge that the sale and use of the Cisco QoS System infringes and with the intent for its customers to use the Cisco QoS System in an infringing manner.

30. The Cisco QoS System provides end-to-end Quality of Service (QoS) within a mobile telecommunication system that satisfies each of the limitations of at least claim 1 of the ’601 Patent.

31. For example, the Cisco Multiprocessor WAN Application Module (MWAM), when used with the Cisco Catalyst 6500 and 7600 Series routing platforms, provides end-to-end Quality of Service (QoS) within a mobile telecommunications system such as the one shown in Figure 1-2 below:

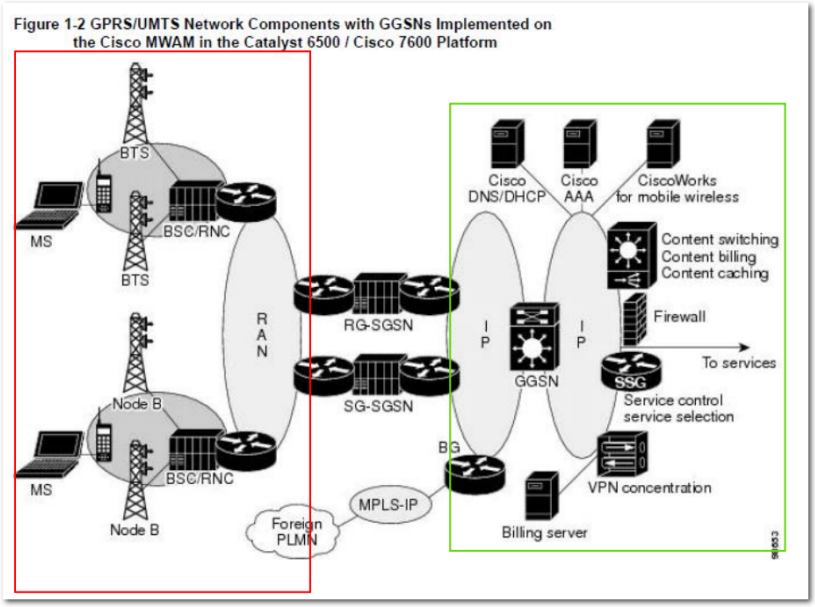

Overview of GPRS and UMTS - Cisco

32. As shown above, the mobile telecommunication system in Figure 1-2 comprises a Core Network outlined in green that contains Cisco routers (shown as short cylinders with four arrows) and a Gateway GPRS Support Node (GGSN). The system also includes a Radio Access Network (RAN) outlined in red.

33. The Core Network is connected to the RAN via a Serving GPRS Support Node (SGSN), which uses an IP based transmission:

> The RAN connects to the GPRS/UMTS core through an SGSN, which tunnels user sessions to a GGSN that acts as a gateway to the services networks (for example, the Internet and intranet). The connection between the SGSN and the GGSN is enabled through a tunneling protocol called the GPRS tunneling protocol (GTP): GTP Version 0 (GTP V0) for 2.5G applications, and GTP Version 1 (GTP V1) for 3G applications. GTP is carried over IP. Multiple SGSNs and GGSNs within a network are referred to collectively as GPRS support nodes (GSNs).

ggsnover.pdf (cisco.com)

34. Cisco implements Quality of Service (QoS) protocols in the Gateway GPRS Support Node (GGSN):

> This chapter describes the QoS support that the GGSN provides for the above GPRS QoS classes. As of GGSN Release 3.0, the GGSN adds a new method of QoS support—delay QoS. The GGSN currently supports the following two methods of QoS for GPRS traffic, only one of which can be activated globally on the GGSN for all GPRS traffic processing:
>
> - Canonical QoS—Maps GPRS QoS classes to canonical QoS classes.
> - Delay QoS—Maps GPRS QoS classes to delay QoS classes.

ggsnqos.pdf (cisco.com)

35. Cisco implements Quality of Service (QoS) on an end-to-end basis:

> **End-to-End QoS Models**
>
> A service model, also called a level of service, describes a set of end-to-end QoS capabilities. End-to-end QoS is the ability of the network to deliver service required by specific network traffic from one end of the network to another. Cisco IOS QoS software supports three types of service models: best effort, integrated, and differentiated services.

https://www.cisco.com/c/en/us/td/docs/ios/qos/configuration/guide/12_2sr/qos_12_2sr_book/qos_overview.html#wp1000918

36. The Cisco Multiprocessor WAN Application Module (MWAM), when used with the Cisco Catalyst 6500 and 7600 Series routing platforms, handles radio resources within the RAN by using a radio resource manager.

37. The network shown in Figure 1-2 below contains two Serving GPRS Support Nodes (SGSN) circled in blue:

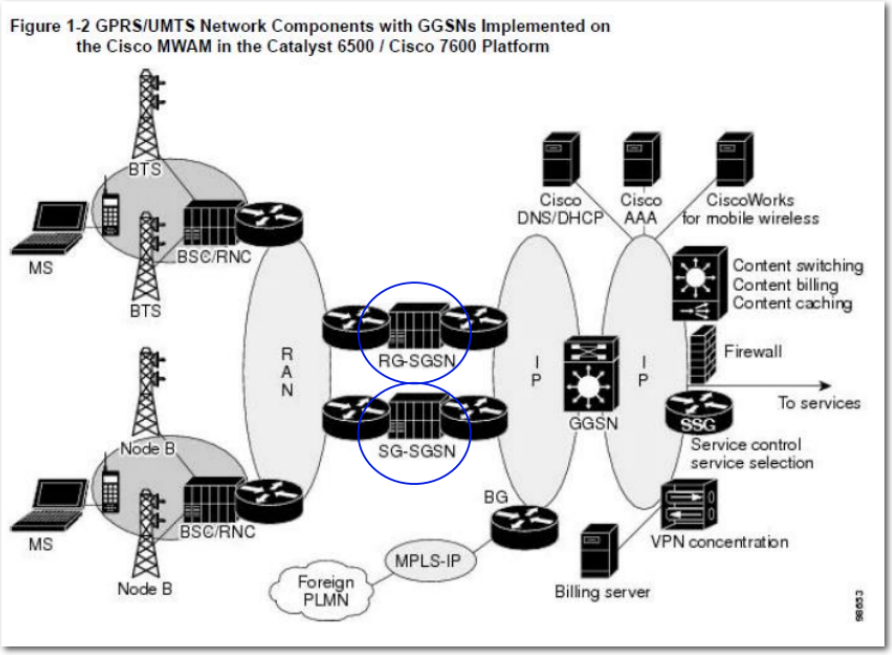

ggsnover.pdf (cisco.com)

38. The Cisco Serving GPRS Support Nodes (SGSN) are responsible for, among other things, RAB (Radio Access Bearer) Assignment Request and RAB Release Request. (*See, e.g.,* Serving GPRS Support Node (SGSN) Overview (cisco.com)).

39. Because the Cisco Serving GPRS Support Nodes (SGSN) are responsible for the Radio Access Bearer (RAB) interface, that functionality is the radio resource manager.

40. The Cisco Multiprocessor WAN Application Module (MWAM), when used with the Cisco Catalyst 6500 and 7600 Series routing platforms, controls IP network resources by using a resource map in a Network Resource Manager (NRM) in order to provide end-to-end Quality of Service (QoS), where the Network Resource Manager (NRM) performs path-sensitive call admission control by using the resource map in the NRM, the NRM checking that resources are available along a path, and the NRM pre-allocating resources in an IP network.

41. In the network shown in Figure 1-2 below, the Network Resource Manager (NRM) functionality is performed by the Cisco Gateway GPRS Support Node (GGSN) circled in orange:

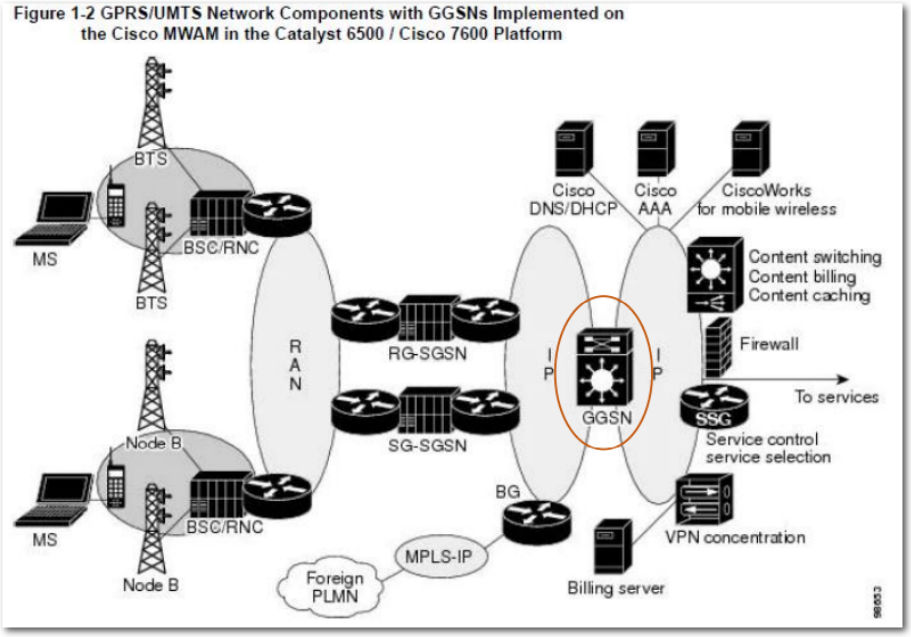

ggsnover.pdf (cisco.com)

42. The Cisco Gateway GPRS Support Node (GGSN) IOS provides Server Load Balancing functionality using Dynamic Feedback Protocol (IOS SLB DFP):

> In GPRS load balancing, IOS SLB knows when a PDP context is established, but it does not know when PDP contexts are cleared, and therefore it cannot know the number of open PDP contexts for each GGSN. Use the IOS SLB Dynamic Feedback Protocol (DFP) to calculate GPRS load-balancing weights dynamically.
>
> With IOS SLB DFP support, a *DFP manager* in a load-balancing environment can initiate a TCP connection with a *DFP agent*. Thereafter, the DFP agent collects status information from one or more real host servers, converts the information to relative weights, and reports the weights to the DFP manager. The DFP manager factors in the weights when load balancing the real servers. In addition to reporting at user-defined intervals, the DFP agent sends an early report if there is a sudden change in a real server's status.

ggsnslb.pdf (cisco.com)

43. The Cisco Gateway GPRS Support Node (GGSN) obtains information as part of its role in controlling Quality of Service (QoS):

> You can use the **show gprs gtp status** command to display several different types of canonical QoS information, including GGSN resources in use, number of active PDP contexts by canonical QoS class, and mean throughput by canonical QoS class.

ggsnqos.pdf (cisco.com)

44. The Cisco Gateway GPRS Support Node (GGSN) also performs path-sensitive call admission control:

> When a request for a user session comes in as a PDP context activation request, the GGSN determines whether the requested QoS for the session packets can be handled based on the amount of the **gprs canonical-qos gsn-resource-factor** that is available on the GGSN. Based on this determination, one of the following occurs:
>
> - If the GGSN can provide the requested QoS, then the GGSN maintains that level of service.
> - If the GGSN cannot provide the requested QoS, then the GGSN either lowers the QoS for the PDP context, or it rejects the PDP context request.

ggsnqos.pdf (cisco.com)

45. The Cisco Gateway GPRS Support Node (GGSN) also pre-allocates resources by recognizing different classes of Quality of Service (QoS) functionality and allocating more resources to the higher classes:

Table 3 GPRS QoS Class Attribute Combinations Mapped to GGSN Canonical QoS Classes

Delay Class	Precedence Class	Mean Throughput Class	GGSN Canonical QoS Class
Best effort	Any	Any	Best effort
1, 2, or 3	Low	Any	Best effort
1, 2, or 3	Any	Best effort	Best effort
1, 2, or 3	Normal	Specified	Normal
1, 2, or 3	High	Specified	Premium

ggsnqos.pdf (cisco.com)

> For the canonical QoS method, the GGSN sets aside a configurable amount of resource to be used for QoS processing. The GGSN allocates a portion of this total available resource for canonical QoS upon PDP context activation, based upon the QoS class to which the PDP context has been assigned. Typically, the GGSN uses more of its resources in support of the higher canonical QoS classes. As of GGSN Release 3.0, the total default amount of resource set aside by the GGSN for canonical QoS support is 3,145,728,000 bits per second. You can modify this value using the **gprs canonical-qos gsn-resource-factor** command. For more information, see the "Configuring Total GGSN Resources for Canonical QoS Support" section on page 157.

ggsnqos.pdf (cisco.com)

46. The Cisco Gateway GPRS Support Node (GGSN) is responsible for implementing Quality of Service (QoS) along the entire pathway ("end-to-end"):

> The Cisco GGSN delivers end-to-end UMTS QoS by implementing it using the Cisco IOS QoS differentiated services (Diffserv).

ggsnqos.pdf (cisco.com)

47. Additionally, adaptive or intelligent routing decisions are performed by the Cisco Serving GPRS Support Nodes (SGSN), which uses a process called Evolved ARP (E-ARP) to preempt certain traffic based on priority levels:

> • **E-ARP:** The EPC uses Evolved ARP, which has priority level ranging from "1" up to "15". Additionally, evolved ARP comprises of pre-emption capability and pre-emption vulnerability. The preemption capability information defines whether a bearer with a lower priority level should be dropped to free up the required resources. The pre-emption vulnerability information indicates whether a bearer is applicable for such dropping by a preemption capable bearer with a higher priority value.

Quality of Service (QoS) Management for SGSN (cisco.com)

48. The Cisco Multiprocessor WAN Application Module (MWAM), when used with the Cisco Catalyst 6500 and 7600 Series routing platforms, schedules resources over time by introducing a start and a stop time as a parameter in a resource request handled by the NRM.

49. Cisco's Quality of Service (QoS) policies can be applied locally through the use of start and stop times:

Configuring Local Policies (GUI)

Procedure

Step 1 Choose **Security** > **Local Policies**.

Step 2 Click **New** to create a new policy.

Step 3 Enter the policy name and click **Apply**.

Step 4 On the **Policy List** page, click the policy name to be configured.

Step 5 On the **Policy > Edit** page, follow these steps:

a) In the **Match Criteria** area, enter a value for **Match Role String**. This is the user type or user group of the user, for example, student, teacher, and so on.

b) From the **Match EAP Type** drop-down list, choose the EAP authentication method used by the client.

c) From the **Device Type** drop-down list, choose the device type.

d) Click **Add** to add the device type to the policy device list.

The device type you choose is listed in the **Device List**.

e) In the **Action** area, specify the policies that are to be enforced. From the **IPv4 ACL** drop-down list, choose an IPv4 ACL for the policy.

f) Enter the **VLAN ID** that should be associated with the policy.

g) From the **QoS Policy** drop-down list, choose a QoS policy to be applied.

h) Enter a value for **Session Timeout**. This is the maximum amount of time, in seconds, after which a client is forced to reauthenticate.

i) Enter a value for **Sleeping Client Timeout**, which is the timeout for sleeping clients.

Sleeping clients are clients with guest access that have had successful web authentication that are allowed to sleep and wake up without having to go through another authentication process through the login page.

This sleeping client timeout configuration overrides the WLAN-specific sleeping client timeout configuration.

j) From the **AVC Profile** drop-down list, choose an AVC profile to be applied based on the role defined in AAA.

k) In the **Active Hours** area, from the **Day** drop-down list, choose the days on which the policy has to be active.

l) Enter the **Start Time** and **End Time** of the policy.

m) Click **Add**.

The day and start time and end time that you specify is listed.

n) Click **Apply**.

https://www.cisco.com/c/en/us/td/docs/wireless/controller/8-3/config-guide/b_cg83.pdf

50. The Cisco Multiprocessor WAN Application Module (MWAM), when used with the Cisco Catalyst 6500 and 7600 Series routing platforms, communicates resource information between the NRM and the radio resource manager.

51. In the network shown below in Figure 1-2, the Cisco Serving GPRS Support Nodes (SGSN), which contains the radio resource manager functionality as described above, also includes

functionality that communicates with the NRM functionality in the Cisco Gateway GPRS Support Node (GGSN):

> • Serving GPRS support node (SGSN)—connects the radio access network (RAN) to the GPRS/UMTS core and tunnels user sessions to the GGSN. The SGSN sends data to and receives data from mobile stations, and maintains information about the location of a mobile station (MS). The SGSN communicates directly with the MS and the GGSN. SGSN support is available from Cisco partners or other vendors.

ggsnover.pdf (cisco.com)

52. The Cisco Multiprocessor WAN Application Module (MWAM), when used with the Cisco Catalyst 6500 and 7600 Series routing platforms, reserves the IP network resources along the path by the NRM to fulfill the end-to-end Quality of Service (QoS).

53. The Cisco Gateway GPRS Support Node (GGSN), acting as the NRM, allows the user to reserve resources for certain Quality of Service (QoS) classes:

> You can also configure resource to be reserved for best effort QoS classes on the GGSN using the **gprs canonical-qos best-effort bandwidth-factor** command. This command specifies an average bandwidth that is expected to be used by best-effort QoS class mobile sessions. The default value is 10 bps. If you observe that users accessing the GGSN are using a higher average bandwidth, then you should increase the bandwidth value.

ggsnqos.pdf (cisco.com)

54. Cisco markets, offers to sell, sells, and distributes the Cisco QoS Systems, and will continue to do so, knowing the same to be especially made or especially adapted for use in an infringement of the ’601 Patent. The Cisco QoS Systems are not staple articles or commodities of commerce suitable for any substantial non-infringing uses.

55. Cisco has committed and continues to commit acts of infringement that Cisco knew or should have known constituted an unjustifiably high risk of infringement of the ’601 Patent. Cisco’s infringement of the ’601 Patent has been and continues to be deliberate and willful, entitling NetSocket to an award of treble damages, reasonable attorney’s fees, and costs in bringing this action.

56. Cisco's direct and indirect infringement has caused and is continuing to cause damage and irreparable injury to NetSocket. NetSocket will continue to suffer damage and irreparable injury until that injury is enjoined by this Court. NetSocket is entitled to preliminary and permanent injunctive relief and damages as a result of Cisco's infringement of the '601 Patent in accordance with 35 U.S.C. §§ 271, 281, 283, 284, and 285.

COUNT 2

(Infringement of U.S. Pat. No. 7,190,698)

57. NetSocket repeats and re-alleges all the allegations above as if fully set forth herein.

58. Cisco has infringed and continues to infringe one or more claims of the '698 Patent by making, using, offering to sell, selling, and/or importing into the United States infringing devices without authority in violation of 35 U.S.C. § 271(a). Cisco has actively induced infringement of the '698 Patent, and continues to induce infringement, without authority in violation of 35 U.S.C. § 271(b). Cisco has also contributed to the infringement of the '698 Patent and continues to contribute to the infringement of the '698 Patent in violation of 35 U.S.C. §271(c).

59. Cisco has and continues to infringe, directly and indirectly, literally and under the doctrine of equivalents, at least claim 1 of the '698 Patent at least by making, using, offering to sell, importing, and/or selling Quality of Service (QoS) as part of its Internetwork Operating System (IOS) versions 12 and above.

60. For example, upon information and belief, Cisco manufactures, imports, sells and offers to sell the Cisco Internetworking Operating System (IOS) versions 12 and above (the "Cisco IOS") in the Unites States, and encourages distributors to sell, offer to sell and use, and encourages Cisco's customers to use, the Cisco IOS in the United States with knowledge that the Cisco IOS infringes the '698 Patent.

61. Cisco has had knowledge of and notice of the ’698 Patent and its infringement since before the filing of this Complaint. Cisco offers to sell the Cisco IOS in this district and does so with the knowledge that the use of the Cisco IOS infringes and with the intent for its distributors and/or customers to use the Cisco IOS in an infringing manner.

62. The Cisco IOS satisfies each of the limitations of at least claim 1 of the ’698 Patent.

63. For example, the Cisco IOS generates a request from an entity for a Virtual Leased Line, VLL, having a predefined Quality of Service, QoS, from a source network (SRC) to a destination network (DST) and applies the request to a Bandwidth Broker (BB) of a domain A, BB_A, associated to the source network.

64. In Figure 1 below, CE1 (the “SRC”) is an ingress router and CE3 (the “DST”) is an egress router:

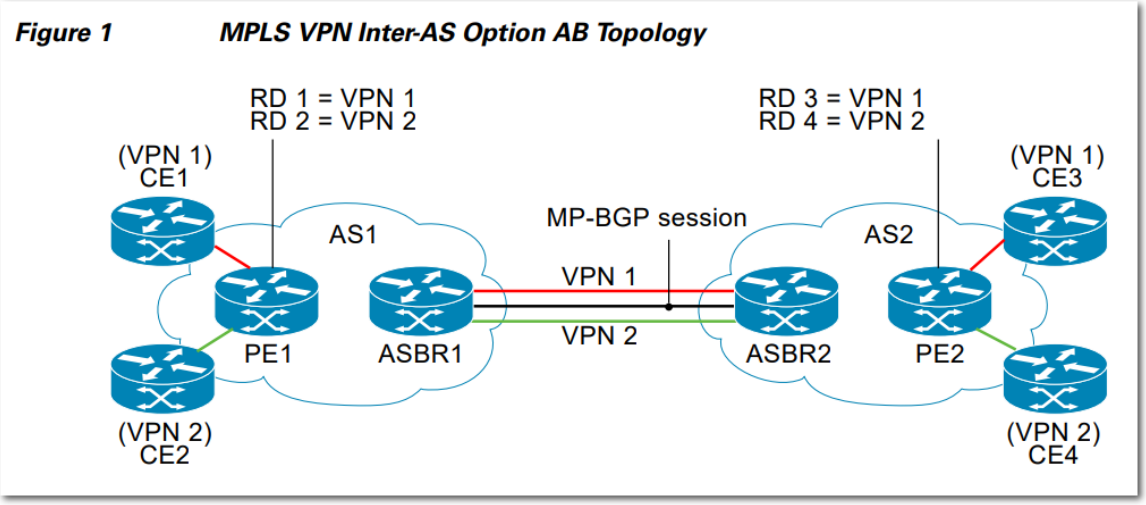

https://www.cisco.com/c/en/us/td/docs/ios/mpls/configuration/guide/12_2sr/mp_12_2sr_book.pdf

65. The Cisco IOS generates a request by having its router request RSVP policy decisions, which reserve network resources, primarily bandwidth (*i.e.*, comprise a Virtual Leased Line using routers that act as Bandwidth Brokers to manage bandwidth resources) and include

end-to-end Quality of Service (QoS) guarantees (*i.e.*, a predefined Quality of Service (QoS) from a source network to a destination network), as shown above.

66. The Cisco IOS includes having domain BBA establish the different domains involved to reach the destination network (DST):

In the figure below, Router A (Cisco 10000 Series) learns routes from autonomous system 10 and autonomous system 60. QoS policy is applied to all packets that match the defined route maps. Any packets from Router A (Cisco 10000 Series) to autonomous system 10 or autonomous system 60 are sent the appropriate QoS policy, as the numbered steps indicate.

Figure 3 ***Router Learning Routes and Applying QoS Policy***

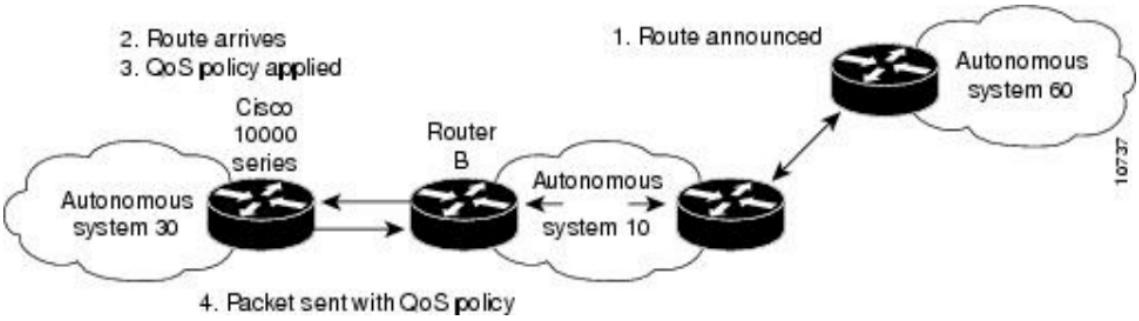

https://www.cisco.com/c/en/us/td/docs/ios-xml/ios/iproute_pi/configuration/15-1mt/iri-15-1mt-book.pdf

67. The Cisco IOS includes having domain BBA directly or indirectly pass requests to all Bandwidth Brokers (BB) of the involved domains regarding a Virtual Leased Line (VLL) of the predefined Quality of Service (QoS) from ingress to egress of each domain:

Traffic Engineering Basics..

TE LSP's setup mechanism:

1. All the routers in the network build a TE topology database using IGP extension & link attributes.
2. Tunnel at the head-end makes the request for a path across the network from head to tail .
   - The path request can be either Dynamic or Explicit.
3. Paths are signaled across the network using RSVP signaling mechanism.
4. On receipt of RSVP Signalling message, all downstream routers either accept or reject based on the requested resources availability.
5. If accepted , RESV messages carrying LABEL are sent from downstream routers towards upstream and the PATH message are forwarded towards the downstream routers.
6. When successful RESV messages reach the headend from all the downstream routers, LSP TE is set up.

https://archive.nanog.org/meetings/nanog49/presentations/Sunday/P2MP.pdf

68. The Cisco IOS includes having each involved bandwidth broker (BB) perform admission control in its domain:

The figure below illustrates an Multiprotocol Label Switching (MPLS) VPN consisting of two separate autonomous systems. Each autonomous system operates under different administrative control and runs a different Interior Gateway Protocol (IGP). Service providers exchange routing information through Exterior Border Gateway Protocol (EBGP) border edge devices (ASBR1, ASBR2).

Figure 1: EBGP Connection Between Two MPLS VPN Inter-AS Systems with ASBRs Exchanging VPN-IPv4 Addresses

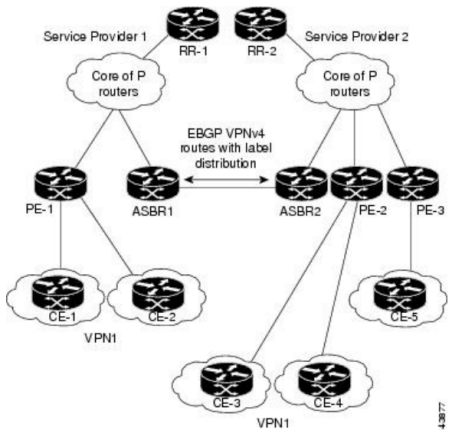

https://www.cisco.com/c/en/us/td/docs/ios-xml/ios/mp_ias_and_csc/configuration/xe-3s/mp-ias-and-csc-xe-3s-book/mp-vpn-connect-asbr.pdf

69. The Cisco IOS includes having each involved bandwidth broker (BB) return a result of the admission control to BBA that passes it back to the requesting entity and if the request was admitted along all domains between the source (SRC) and the destination (DST) a Virtual Leased Line (VLL) of the predefined Quality of Service (QoS) is granted:

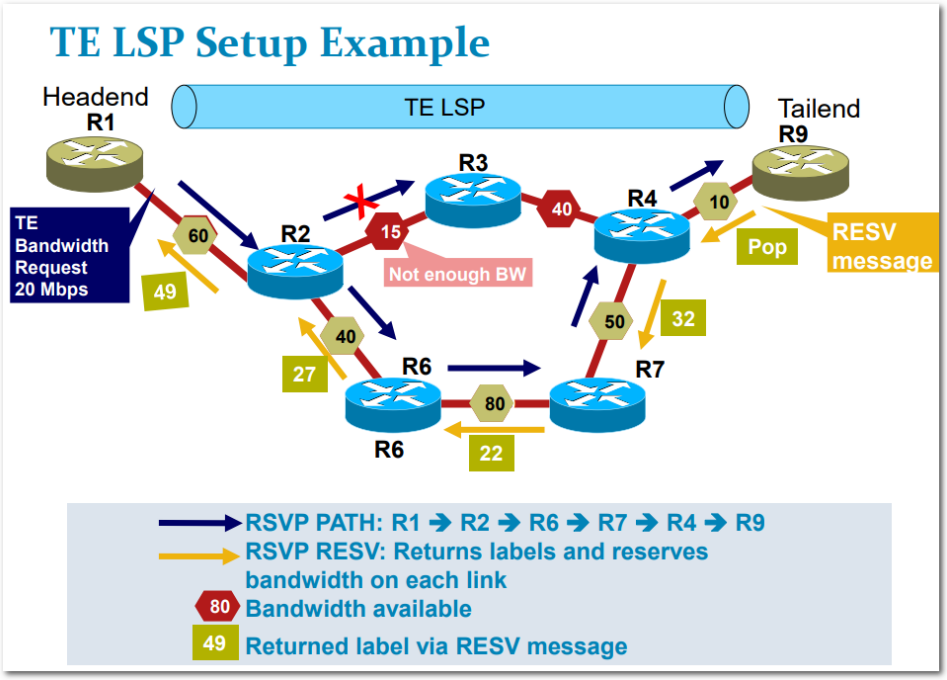

https://archive.nanog.org/meetings/nanog49/presentations/Sunday/P2MP.pdf

70. The Cisco IOS includes performing Label Switched Path (LSP), setup and passing resource requests from the bandwidth broker (BB) to at least one intra-domain (1DB), wherein each intra-domain (1DB) is responsible for admission control and the Label Switched Path (LSP) setup:

Traffic Engineering Basics..

TE LSP's setup mechanism:

1. All the routers in the network build a TE topology database using IGP extension & link attributes.
2. Tunnel at the head-end makes the request for a path across the network from head to tail .
   - The path request can be either Dynamic or Explicit.
3. Paths are signaled across the network using RSVP signaling mechanism.
4. On receipt of RSVP Signalling message, all downstream routers either accept or reject based on the requested resources availability.
5. If accepted , RESV messages carrying LABEL are sent from downstream routers towards upstream and the PATH message are forwarded towards the downstream routers.
6. When successful RESV messages reach the headend from all the downstream routers, LSP TE is set up.

https://archive.nanog.org/meetings/nanog49/presentations/Sunday/P2MP.pdf

71. Cisco markets, offers to sell, sells, and distributes the Cisco IOS, and will continue to do so, knowing the same to be especially made or especially adapted for use in an infringement of the '698 Patent. The Cisco IOS is not a staple article or commodity of commerce suitable for any substantial non-infringing uses.

72. Cisco has committed and continues to commit acts of infringement that Cisco knew or should have known constituted an unjustifiably high risk of infringement of the '698 Patent. Cisco's infringement of the '698 Patent has been and continues to be deliberate and willful, entitling NetSocket to an award of treble damages, reasonable attorney's fees, and costs in bringing this action.

73. Cisco's direct and indirect infringement has caused and is continuing to cause damage and irreparable injury to NetSocket. NetSocket will continue to suffer damage and irreparable injury until that injury is enjoined by this Court. NetSocket is entitled to preliminary

and permanent injunctive relief and damages as a result of Cisco's infringement of the '698 Patent in accordance with 35 U.S.C. §§ 271, 281, 283, 284, and 285.

PRAYER FOR RELIEF

WHEREFORE, NetSocket prays that this Court grant the following relief:

a) An order adjudging and decreeing that Cisco has infringed one or more claims of the Asserted Patents;

b) A permanent injunction pursuant to 35 U.S.C. § 283 against the continuing infringement of the claims of the Asserted Patents by Cisco, its officers, agents, employees, attorneys, representatives, and all others acting in concert therewith;

c) An order directing Cisco to account for and pay to NetSocket all damages caused to NetSocket by reason of Cisco's patent infringement, pursuant to 35 U.S.C. §§ 284 and 289, and that interest and costs be assessed against Cisco;

d) A declaration that Cisco's infringement was and is willful from the time it became aware of the infringing nature of its products and an award of treble damages for the period of such willful infringement of the Asserted Patents, pursuant to 35 U.S.C. § 284;

e) A declaration that this case is exceptional and an award of attorneys' fees and costs under 35 U.S.C. § 285 against Cisco; and

f) For all other relief the Court deems just and proper.

JURY DEMAND

Pursuant to Rule 38(b) of the Federal Rules of Civil Procedure, NetSocket hereby demands a trial by jury of all issues so triable.

DATED: May 24, 2022

Respectfully submitted,

By: */s/ Greg Love*
Greg Love
State Bar No. 24013060
Email: greg@swclaw.com
Mark D. Siegmund
State Bar No. 24117055
Email: mark@swclaw.com
Craig D. Cherry
State Bar No. 24012419
Email: craig@swclaw.com
Justin Allen
State Bar No. 24081977
Email: justin@swclaw.com
STECKLER WAYNE CHERRY & LOVE, PLLC
8416 Old McGregor Road
Waco, Texas 76712
Tele: (254) 651-3690
Fax: (254) 651-3689

Thomas G. Southard
Brian S. Seal
Shaun D. Gregory
(*Pro Hac Vice* admissions to be requested)
TAFT STETTINIUS & HOLLISTER LLP
200 Massachusetts Ave., Suite 400
Washington, D.C. 20001
Tele: (202) 664-1537
Fax: (202) 664-1586
tsouthard@taftlaw.com
bseal@taftlaw.com
sgregory@taftlaw.com

Richard Eric Gaum
(*Pro Hac Vice* admission to be requested)
TAFT STETTINIUS & HOLLISTER LLP
200 Public Square, Suite 3500
Cleveland, Ohio 44114-2302
Tele: (216) 241-2838
Fax: (216) 241-3707
egaum@taftlaw.com

Shalu Maheshwari
(*Pro Hac Vice* admission to be requested)
DAIGNAULT IYER LLP
8618 Westwood Center Drive
Suite 150
Vienna, VA 22102
Tele: (202) 997-1925
smaheshwari@daignaultiyer.com

Attorneys for Plaintiff NetSocket, Inc.