IN THE UNITED STATES DISTRICT COURT
FOR THE EASTERN DISTRICT OF TEXAS
MARSHALL DIVISION

FORCE MOS TECHNOLOGY CO. LTD.,	§	
Plaintiff,	§	
v.	§	Case No. 2:22-CV-00460-JRG-RSP
ASUSTEK COMPUTER, INC.,	§	
Defendant.	§	

CLAIM CONSTRUCTION ORDER

On April 11, 2024, the Court held a hearing to determine the proper construction of the disputed claim terms in U.S. Patent Nos. 7,629,634 ("the '634 Patent"), 7,812,409 ("the '409 Patent"), and 7,847,346 ("the '346 Patent") (collectively "Asserted Patents"). Having reviewed the arguments made by the parties at the hearing and in their claim construction briefing (Dkt. Nos. 42, 58, 64)[1], having considered the intrinsic evidence, and having made subsidiary factual findings about the extrinsic evidence, the Court hereby issues this Claim Construction Order. *See Phillips v. AWH Corp.*, 415 F.3d 1303, 1314 (Fed. Cir. 2005) (en banc); *see also Teva Pharm. USA, Inc. v. Sandoz, Inc.*, 135 S. Ct. 831, 841 (2015).

[1] Citations to the parties' filings are to the filing's number in the docket (Dkt. No.) and pin cites are to the page numbers assigned through ECF.

TABLE OF CONTENTS

I. BACKGROUND 3

II. APPLICABLE LAW 7

III. LEVEL OF ORDINARY SKILL IN THE ART 12

IV. CONSTRUCTION OF AGREED TERMS 13

V. CONSTRUCTION OF DISPUTED TERMS 13

A. "a plurality of trenched gates covered by said interlayer oxide film are formed on top of said source layer extending downwardly through said base layer".. 13

B. "the sidewalls of said trenches in said base layer"..... 17

C. "substantially square-shaped" 23

D. "rounded corners" and "circular trench contact" 28

E. "a top surface of said semiconductor substrate" 32

F. "with said source region and body region disposed between a gate oxide lining of said trenched gates and all circumferential points of the circular trench contact" 35

G. "plurality of source contact trenches . . . with vertical sidewalls substantially perpendicular to a top epitaxial surface within said source regions" and "a plurality of trench source contacts comprising a plurality of sidewalls, two of said sidewalls substantially perpendicular to a top surface of said source regions"..... 38

H. "plurality of source contact trenches . . . further extending into said body regions with tapered sidewalls with respect to said top surface of said epitaxial layer" and "a plurality of trench source contacts comprising a plurality of sidewalls, . . . two other sidewalls tapered with respect to said source regions" 41

I. "P+ areas wrapping said sidewalls and bottom of said trench source contacts within said P-body regions" 44

J. "lateral contact layer"..... 47

VI. CONCLUSION..... 50

I. BACKGROUND

Plaintiff Force MOS Technology, Co., Ltd. ("Force MOS") alleges that Defendant ASUSTek Computer, Inc. ("ASUS") infringes the Asserted Patents. Shortly before the start of the April 11, 2024 hearing, the Court provided the parties with preliminary constructions with the aim of focusing the parties' arguments and facilitating discussion.

The '634 Patent, titled "Trenched MOSFET with Trenched Source Contact," was filed on February 23, 2008, and issued on December 8, 2009. The '634 Patent "relates to a trenched MOSFET with trenched source contact and, in particular, to provide a lateral contact layer in the MOSFET for avalanche improvement." '634 Patent at 1:6–8.

The Abstract of the '634 Patent states:

> A trenched MOSFET with trenched source contact, comprising: a semiconductor region, further comprising a silicon substrate, a epitaxial layer corresponding to the drain region of the trenched MOSFET, a base layer corresponding to the body region of the trenched MOSFET, and a source layer corresponding to the source region of the trenched MOSFET; an interlayer oxide film formed on the source layer; a front metal layer formed on a upper surface of the semiconductor region; a back metal layer formed on a lower surface of the semiconductor region; a plurality of trenched gates formed to reach the epitaxial layer through the source layer and the base layer, and is covered by the interlayer oxide film; and a plurality of source contact trenches formed to reach the base layer through the interlayer oxide film and the source layer, and is covered by the front metal layer; wherein the silicon substrate, the epitaxial layer, the base layer, and the source layer are stacked in sequence; and each of the source contact trenches has a lateral contact layer at a sidewall thereof.

Claim 1 of the '634 Patent is an illustrative claim and recites the following elements (disputed terms in italics):

> 1.A trenched MOSFET with trenched source contact, comprising:
> a semiconductor region having a drain region, a body region and a source region, comprising, a silicon substrate, an epitaxial layer corresponding to said drain region disposed on the top of said silicon substrate, a base layer corresponding to said body

> region disposed on the top of said epitaxial layer, and a source layer corresponding to said source region disposed on the top of said base layer;
> a front metal layer formed on the upper surface of said semiconductor region;
> an interlayer oxide film formed between said source layer and said front metal layer,
> a bottom metal layer formed on the lower surface of said semiconductor region;
> *a plurality of trenched gates covered by said interlayer oxide film are formed on top of said source layer extending downwardly through said base layer* to a portion of said epitaxial layer; and
> a plurality of source contact trenches formed on the top of said interlayer oxide film extending downwardly through said source layer to a portion of said base layer; wherein *the sidewalls of said trenches in said base layer* are covered by the *lateral contact layer*; wherein the bottom base of said trenches in said base layer are covered by the base contact layer.

The ’409 Patent, titled “Trench MOSFET with Cell Layout, Ruggedness, Truncated Corners,” was filed on December 4, 2006, and issued on October 12, 2010. The ’409 Patent “relates to a novel and improved cell structure, device configuration and improved process for fabricating a trenched semiconductor power device with improved ruggedness with truncated corners.” ’409 Patent at 1:9–13.

The Abstract of the ’409 Patent states:

> A trenched semiconductor power device that includes a trenched gate disposed in an extended continuous trench surrounding a plurality of transistor cells wherein the layout of the trenched gate surrounding the transistor cells as closed cells having truncated corners or rounded corners. In an exemplary embodiment, the closed cells further includes a contact metal to contact a source and a body regions wherein the contact metal the trenched gate surrounding the transistor cell have a uniform space between them. In another exemplary embodiment, the semiconductor power device further includes a contact dopant region disposed below the contact metal to enhance an electrical contact between the metal contact and the source region and the body region, and the contact dopant region having substantially circular shape to achieve a uniform space between the contact dopant region and the trenched gate surrounding the closed cells.

Claim 1 of the ’409 Patent is an illustrative claim and recites the following elements (disputed terms in italics):

> 1.A trenched semiconductor power device comprising a plurality of trenched gates surrounding a plurality of transistor cells formed in a semiconductor substrate, wherein:
> said trenched gates surrounding said transistor cells as closed cells constituting *substantially square-shaped* cells with *rounded corners*;
> each of said closed cells further includes a *circular trench contact* disposed substantially in a central portion of said closed cells, penetrating through a source region surrounding said trenched gates and extending into a body region encompassing said source region;
> said *circular trench contact* comprises a hole opened from *a top surface of said semiconductor substrate* and is filled with a contact metal plug wherein sidewalls of said hole are surrounded by and in contact said source and body regions and said *circular trench contact* is separate from said trenched gates *with said source region and body region disposed between a gate oxide lining of said trenched gates and all circumferential points of the circular trench contact*; and
> said contact metal plug connected to a source metal disposed on top of said circular trench contact.

The ’346 Patent, titled “Trench MOSFET with Trench Source Contact Having Copper Wire Bonding,” was filed on November 26, 2008, and issued on December 7, 2010. The ’346 Patent relates “relates to a novel and improved cell structure and improved process for fabricating a trench MOSFET with trench source contact having copper wire bonding.” ’346 Patent at 1:10–13.

The Abstract of the ’346 Patent states:

> A trench MOSFET with trench source contact structure having copper wire bonding is disclosed. By employing the proposed structure, die size can be shrunk into 30%.about.70% with high cell density, and the spreading resistance is significantly reduce without adding expensive thick metal layer as prior art. To further reduce fabricating cost, copper wire bonding is used with requirement of thick Al alloys.

Claim 1 of the ’346 Patent is an illustrative claim and recites the following elements (disputed terms in italics):

> 1.A trench MOSFET comprising a plurality of semiconductor power cells with each cell comprising a plurality of trench gates surrounded by a plurality of source regions of a first type conductivity above a plurality of body regions of second type conductivity above a drain region disposed on a bottom surface of a substrate, said trench MOSFET further comprising:
>
> a substrate of said first type conductivity;
>
> an epitaxial layer of said first type conductivity over said substrate, having a lower doping concentration than said substrate;
>
> a plurality of trenches extending into said epitaxial layer, surrounded by a plurality of said source regions of said first type conductivity above said body regions of said second type conductivity;
>
> a first insulating layer lining said trenches as gate oxide;
>
> a doped polysilicon of said first type conductivity as said trench gates overlying said first insulating layer;
>
> a second insulating layer disposed over said epitaxial layer to isolate a source metal which contacts said both source and body regions, from said doped polysilicon as said trench gates;
>
> a *plurality of source contact trenches* penetrating through said second insulating layer and said source regions *with vertical sidewalls substantially perpendicular to a top epitaxial surface within said source regions*, and *further extending into said body regions with tapered sidewalls with respect to said top surface of said epitaxial layer*;
>
> a front metal disposed on the front surface of said trench MOSFET as said source metal;
>
> a backside metal disposed on the backside of said substrate as a drain metal;
>
> at least one copper wire electrically bonded to said source metal.

II. APPLICABLE LAW

A. Claim Construction

"It is a 'bedrock principle' of patent law that 'the claims of a patent define the invention to which the patentee is entitled the right to exclude.'" *Phillips v. AWH Corp.*, 415 F.3d 1303, 1312 (Fed. Cir. 2005) (en banc) (quoting *Innova/Pure Water Inc. v. Safari Water Filtration Sys., Inc.*, 381 F.3d 1111, 1115 (Fed. Cir. 2004)). To determine the meaning of the claims, courts start by considering the intrinsic evidence. *Id.* at 1313; *C.R. Bard, Inc. v. U.S. Surgical Corp.*, 388 F.3d 858, 861 (Fed. Cir. 2004); *Bell Atl. Network Servs., Inc. v. Covad Commc'ns Grp., Inc.*, 262 F.3d 1258, 1267 (Fed. Cir. 2001). The intrinsic evidence includes the claims themselves, the specification, and the prosecution history. *Phillips*, 415 F.3d at 1314; *C.R. Bard, Inc.*, 388 F.3d at 861. The general rule—subject to certain specific exceptions discussed *infra*—is that each claim term is construed according to its ordinary and accustomed meaning as understood by one of ordinary skill in the art at the time of the invention in the context of the patent. *Phillips*, 415 F.3d at 1312–13; *Alloc, Inc. v. Int'l Trade Comm'n*, 342 F.3d 1361, 1368 (Fed. Cir. 2003); *Azure Networks, LLC v. CSR PLC*, 771 F.3d 1336, 1347 (Fed. Cir. 2014) (quotation marks omitted) ("There is a heavy presumption that claim terms carry their accustomed meaning in the relevant community at the relevant time.") *cert. granted, judgment vacated,* 135 S. Ct. 1846 (2015).

"The claim construction inquiry . . . begins and ends in all cases with the actual words of the claim." *Renishaw PLC v. Marposs Societa' per Azioni*, 158 F.3d 1243, 1248 (Fed. Cir. 1998). "[I]n all aspects of claim construction, 'the name of the game is the claim.'" *Apple Inc. v. Motorola, Inc.*, 757 F.3d 1286, 1298 (Fed. Cir. 2014) (quoting *In re Hiniker Co.*, 150 F.3d 1362, 1369 (Fed. Cir. 1998)) *overruled on other grounds by Williamson v. Citrix Online, LLC*, 792 F.3d 1339 (Fed. Cir. 2015). First, a term's context in the asserted claim can be instructive. *Phillips*, 415 F.3d at 1314. Other asserted or unasserted claims can also aid in determining the claim's meaning, because

claim terms are typically used consistently throughout the patent. *Id.* Differences among the claim terms can also assist in understanding a term's meaning. *Id*. For example, when a dependent claim adds a limitation to an independent claim, it is presumed that the independent claim does not include the limitation. *Id*. at 1314–15.

"[C]laims 'must be read in view of the specification, of which they are a part.'" *Id*. (quoting *Markman v. Westview Instruments, Inc.*, 52 F.3d 967, 979 (Fed. Cir. 1995) (en banc)). "[T]he specification 'is always highly relevant to the claim construction analysis. Usually, it is dispositive; it is the single best guide to the meaning of a disputed term.'" *Id*. (quoting *Vitronics Corp. v. Conceptronic, Inc.*, 90 F.3d 1576, 1582 (Fed. Cir. 1996)); *Teleflex, Inc. v. Ficosa N. Am. Corp.*, 299 F.3d 1313, 1325 (Fed. Cir. 2002). This is true because a patentee may define his own terms, give a claim term a different meaning than the term would otherwise possess, or disclaim or disavow the claim scope. *Phillips*, 415 F.3d at 1316. In these situations, the inventor's lexicography governs. *Id*.

The specification may also resolve ambiguous claim terms "where the ordinary and accustomed meaning of the words used in the claims lack sufficient clarity to permit the scope of the claim to be ascertained from the words alone." *Teleflex, Inc.*, 299 F.3d at 1325. But, "'[a]lthough the specification may aid the court in interpreting the meaning of disputed claim language, particular embodiments and examples appearing in the specification will not generally be read into the claims.'" *Comark Commc'ns, Inc. v. Harris Corp.*, 156 F.3d 1182, 1187 (Fed. Cir. 1998) (quoting *Constant v. Advanced Micro-Devices, Inc.*, 848 F.2d 1560, 1571 (Fed. Cir. 1988)); *see also Phillips*, 415 F.3d at 1323. "[I]t is improper to read limitations from a preferred embodiment described in the specification—even if it is the only embodiment—into the claims

absent a clear indication in the intrinsic record that the patentee intended the claims to be so limited." *Liebel-Flarsheim Co. v. Medrad, Inc.*, 358 F.3d 898, 913 (Fed. Cir. 2004).

The prosecution history is another tool to supply the proper context for claim construction because, like the specification, the prosecution history provides evidence of how the U.S. Patent and Trademark Office ("PTO") and the inventor understood the patent. *Phillips*, 415 F.3d at 1317. However, "because the prosecution history represents an ongoing negotiation between the PTO and the applicant, rather than the final product of that negotiation, it often lacks the clarity of the specification and thus is less useful for claim construction purposes." *Id.* at 1318; *see also Athletic Alts., Inc. v. Prince Mfg.*, 73 F.3d 1573, 1580 (Fed. Cir. 1996) (ambiguous prosecution history may be "unhelpful as an interpretive resource").

Although extrinsic evidence can also be useful, it is "'less significant than the intrinsic record in determining the legally operative meaning of claim language.'" *Phillips*, 415 F.3d at 1317 (quoting *C.R. Bard, Inc.*, 388 F.3d at 862). Technical dictionaries and treatises may help a court understand the underlying technology and the manner in which one skilled in the art might use claim terms, but technical dictionaries and treatises may provide definitions that are too broad or may not be indicative of how the term is used in the patent. *Id*. at 1318. Similarly, expert testimony may aid a court in understanding the underlying technology and determining the particular meaning of a term in the pertinent field, but an expert's conclusory, unsupported assertions as to a term's definition are not helpful to a court. *Id*. Extrinsic evidence is "less reliable than the patent and its prosecution history in determining how to read claim terms." *Id*. The Supreme Court has explained the role of extrinsic evidence in claim construction:

> In some cases, however, the district court will need to look beyond the patent's intrinsic evidence and to consult extrinsic evidence in order to understand, for example, the background science or the meaning of a term in the relevant art during the relevant time period. *See, e.g., Seymour v. Osborne*, 11 Wall. 516, 546 (1871)

> (a patent may be "so interspersed with technical terms and terms of art that the testimony of scientific witnesses is indispensable to a correct understanding of its meaning"). In cases where those subsidiary facts are in dispute, courts will need to make subsidiary factual findings about that extrinsic evidence. These are the "evidentiary underpinnings" of claim construction that we discussed in *Markman*, and this subsidiary factfinding must be reviewed for clear error on appeal.

Teva Pharm. USA, Inc. v. Sandoz, Inc., 574 U.S. 318, 331–32 (2015).

B. Departing from the Ordinary Meaning of a Claim Term

There are "only two exceptions to [the] general rule" that claim terms are construed according to their plain and ordinary meaning: "1) when a patentee sets out a definition and acts as his own lexicographer, or 2) when the patentee disavows the full scope of the claim term either in the specification or during prosecution."[2] *Golden Bridge Tech., Inc. v. Apple Inc.*, 758 F.3d 1362, 1365 (Fed. Cir. 2014) (quoting *Thorner v. Sony Comput. Entm't Am. LLC*, 669 F.3d 1362, 1365 (Fed. Cir. 2012)); *see also GE Lighting Sols., LLC v. AgiLight, Inc.*, 750 F.3d 1304, 1309 (Fed. Cir. 2014) ("[T]he specification and prosecution history only compel departure from the plain meaning in two instances: lexicography and disavowal."). The standards for finding lexicography or disavowal are "exacting." *GE Lighting Sols.*, 750 F.3d at 1309.

To act as his own lexicographer, the patentee must "clearly set forth a definition of the disputed claim term," and "clearly express an intent to define the term." *Id.* (quoting *Thorner*, 669 F.3d at 1365); *see also Renishaw*, 158 F.3d at 1249. The patentee's lexicography must appear "with reasonable clarity, deliberateness, and precision." *Renishaw*, 158 F.3d at 1249.

To disavow or disclaim the full scope of a claim term, the patentee's statements in the specification or prosecution history must amount to a "clear and unmistakable" surrender. *Cordis*

[2] Some cases have characterized other principles of claim construction as "exceptions" to the general rule, such as the statutory requirement that a means-plus-function term is construed to cover the corresponding structure disclosed in the specification. *See, e.g., CCS Fitness, Inc. v. Brunswick Corp.*, 288 F.3d 1359, 1367 (Fed. Cir. 2002).

Corp. v. Bos. Sci. Corp., 561 F.3d 1319, 1329 (Fed. Cir. 2009); *see also Thorner*, 669 F.3d at 1366 ("The patentee may demonstrate intent to deviate from the ordinary and accustomed meaning of a claim term by including in the specification expressions of manifest exclusion or restriction, representing a clear disavowal of claim scope."). "Where an applicant's statements are amenable to multiple reasonable interpretations, they cannot be deemed clear and unmistakable." *3M Innovative Props. Co. v. Tredegar Corp.*, 725 F.3d 1315, 1326 (Fed. Cir. 2013).

C. Definiteness Under 35 U.S.C. § 112, ¶ 2 (pre-AIA) / § 112(b) (AIA)

Patent claims must particularly point out and distinctly claim the subject matter regarded as the invention. 35 U.S.C. § 112, ¶ 2. A claim, when viewed in light of the intrinsic evidence, must "inform those skilled in the art about the scope of the invention with reasonable certainty." *Nautilus Inc. v. Biosig Instruments, Inc.*, 572 U.S. 898, 910 (2014). If it does not, the claim fails § 112, ¶ 2 and is therefore invalid as indefinite. *Id.* at 901. Whether a claim is indefinite is determined from the perspective of one of ordinary skill in the art as of the time the application for the patent was filed. *Id.* at 911. As it is a challenge to the validity of a patent, the failure of any claim in suit to comply with § 112 must be shown by clear and convincing evidence. *BASF Corp. v. Johnson Matthey Inc.,* 875 F.3d 1360, 1365 (Fed. Cir. 2017). "[I]ndefiniteness is a question of law and in effect part of claim construction." *ePlus, Inc. v. Lawson Software, Inc.*, 700 F.3d 509, 517 (Fed. Cir. 2012).

When a term of degree is used in a claim, "the court must determine whether the patent provides some standard for measuring that degree." *Biosig Instruments, Inc. v. Nautilus, Inc.*, 783 F.3d 1374, 1378 (Fed. Cir. 2015) (quotation marks omitted). Likewise, when a subjective term is used in a claim, "a court must determine whether the patent's specification supplies some standard for measuring the scope of the [term]." *Ernie Ball, Inc. v. Earvana, LLC*, 502 F. App'x 971, 980

(Fed. Cir. 2013) (citations omitted). The standard "must provide objective boundaries for those of skill in the art." *Interval Licensing LLC v. AOL, Inc.*, 766 F.3d 1364, 1371 (Fed. Cir. 2014).

III. LEVEL OF ORDINARY SKILL IN THE ART

It is well established that patents are interpreted from the perspective of one of ordinary skill in the art ("POSITA"). *See Phillips*, 415 F.3d at 1313 ("[T]he ordinary and customary meaning of a claim term is the meaning that the term would have to a person of ordinary skill in the art in question at the time of the invention, i.e., as of the effective filing date of the patent application."). The Federal Circuit has advised that the "[f]actors that may be considered in determining the level of skill in the art include: (1) the educational level of the inventors; (2) the type of problems encountered in the art; (3) prior art solutions to those problems; (4) the rapidity with which innovations are made; (5) sophistication of the technology; and (6) education level of active workers in the field." *Env'tl Designs, Ltd. v. Union Oil Co. of California*, 713 F.2d 693, 696 (Fed. Cir. 1983). "These factors are not exhaustive but are merely a guide to determining the level of ordinary skill in the art." *Daiichi Sankyo Co. Ltd. v. Apotex, Inc.*, 501 F.3d 1254, 1256 (Fed. Cir. 2007).

Defendant's expert, Dr. Liu, opines that a POSITA would have a "Master's degree in electrical engineering (or a related field) and had at least two years of relevant work experience in the field of integrated circuit design and manufacturing." (Dkt. No. 42-6 at ¶¶ 52, 84, 135). Plaintiff does not provide a proposal for a POSITA, but instead states that it does not dispute Defendant's characterization for the purpose of the present claim construction issues before the Court. (Dkt. No. 42 at 10). Accordingly, the Court finds that for the purposes of claim construction, a POSITA would have had a "Master's degree in electrical engineering (or a related field) and had at least two years of relevant work experience in the field of integrated circuit design and manufacturing."

IV. CONSTRUCTION OF AGREED TERMS

The parties agreed to the construction of the following claim terms:

Claim Term/Phrase	Agreed Construction
"front" '634 Patent: Claim 1 '346 Patent: Claim 1	"The side of the three-dimensional device to which the photolithography was applied"
"back" '346 Patent: Claim 1	"The side of the three-dimensional device opposite the 'front'"
"top" / "upper" '634 Patent: Claim 1 '346 Patent: Claims 1, 2, 16, 18	"Referring to the direction of the 'front' (e.g., the top surface of a layer refers to the side of the layer that is facing toward the front of the device)"
"bottom" / "lower" / "downwardly" '634 Patent: Claims 1, 17 '346 Patent: Claims 1, 17	"Referring to the direction of the 'back' (e.g., the bottom surface of a layer refers to the side of the layer that is facing toward the back of the device)"

Dkt. No. 65-1 at 2-11 (Joint Claim Construction Chart). In view of the parties' agreement on the proper construction of the identified terms, the Court hereby **ADOPTS** the parties' agreed constructions.

V. CONSTRUCTION OF DISPUTED TERMS

The parties dispute the meaning and scope of thirteen terms or phrases in the Asserted Patents. Each dispute is addressed below.

A. "a plurality of trenched gates covered by said interlayer oxide film are formed on top of said source layer extending downwardly through said base layer"

Disputed Term	Plaintiff's Proposal	Defendant's Proposal
"a plurality of trenched gates covered by said interlayer oxide film are formed on top of said source layer extending downwardly through said base layer"	Plain and ordinary meaning, i.e.: trenched gates are formed from top of source layer and extend down through the base layer (i.e., gates need not "extend from above" said source layer)	"a plurality of trenched gates covered by said interlayer oxide film are formed on and extend from above said source layer through said base layer

1. Analysis

The phrase "a plurality of trenched gates covered by said interlayer oxide film are formed on top of said source layer extending downwardly through said base layer" appears in Asserted Claim 1 of the '634 Patent. The parties dispute whether the tops of the gates must be above the plane of the top of the source layer, as Defendant contends. The Court rejects Defendant's construction, because it improperly redrafts "formed on top" to "extend from above."

The specification of the '634 Patent is consistent with the plain and ordinary meaning of the disputed phrase. The specification teaches that a base layer is created by doping the silicon material with one dopant type. The source layer is then created by doping the top layer of the silicon material with a different dopant type to a shallower depth, as illustrated in Figure 2C. '634 Patent at 3:36–38 ("[A] N+-type source layer (206) is formed on the P-type base layer (205) to the depth shallower than the gate trenches (221) …"). The gate trenches themselves are created in Figure 2A by etching trenches into the same silicon material that becomes the source layer in Figure 2C. *Id.* at 3:1–7, Figure 2A. The relationship between the source layer and gates is illustrated below in Figures 2A and 2C.

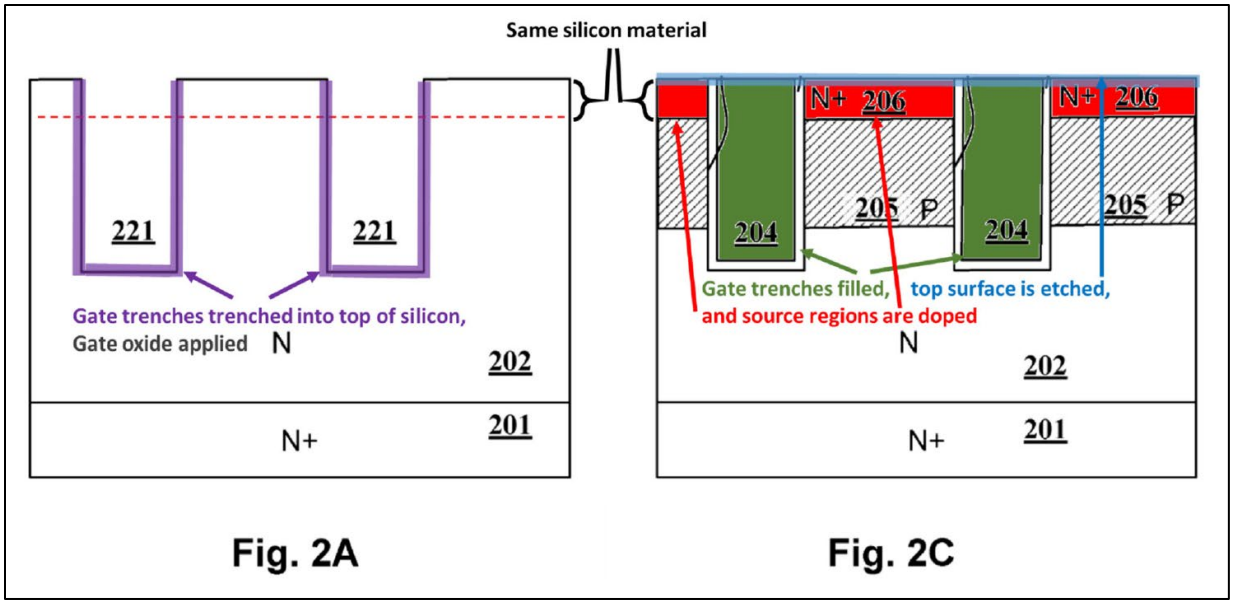

Id. at Figures 2A, 2C (annotated). The specification teaches that the form of the trench gates in the final device extends from the top of the source layer and through the base layer, which is what the claim language requires.

Defendant argues that Claim 1 expressly recites that the trenched gates must be formed on top of a source layer, indicating that the trenched gates are positioned above or on the source layer in the device. (Dkt. No. 58 at 9). Referring to Figure 2D, Defendant contends that the claim requires that the trenched gates (204), which are covered by the interlayer oxide film (207), are formed on top of the source layer (206) and extend downwardly through the base layer (205). *Id.* According to Defendant, the trenched gates (204) are formed slightly above the source layer (206) and then extend downwardly into the base layer (205). *Id.* at 9-10.

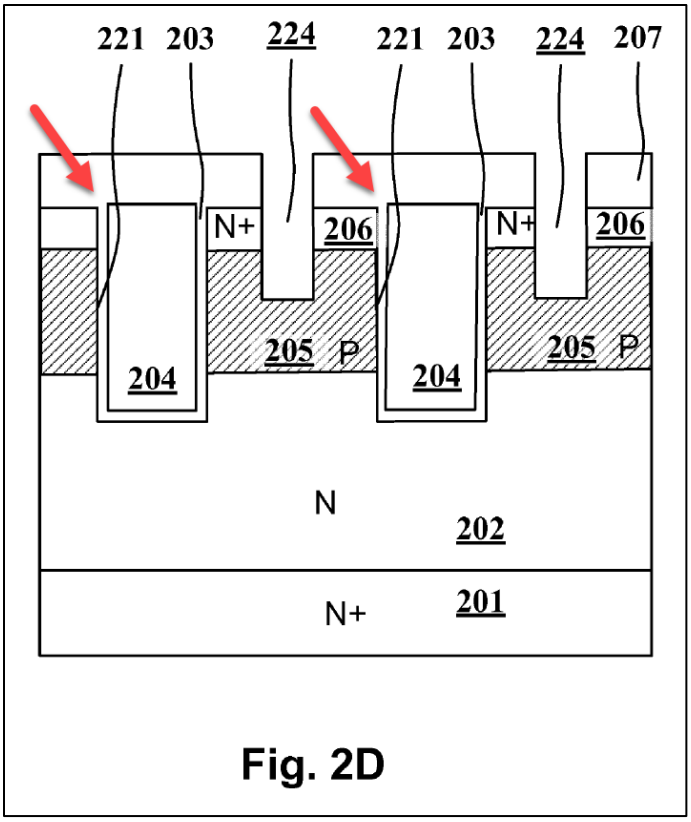

Fig. 2D

'634 Patent at Figure 2D (annotated). The Court finds that Defendant's reference to Figure 2D is unpersuasive. First, it is improper to construe claim language based on insignificant details in the figures of a patent. *Hockerson-Halberstadt, Inc. v. Avia Group Int'l*, 222 F.3d 951, 956 (Fed. Cir. 2000) ("[I]t is well established that patent drawings do not define the precise proportions of the elements."). Moreover, Defendant does not cite to any language in the specification that supports its construction. As discussed above, and contrary to Defendant's contention, Figure 2C shows the tops of the gates and the tops of the source layer as being coplanar. Indeed, Defendant's expert agreed that Figure 2C illustrates the tops of the gates and the tops of the source layer as being coplanar. (Dkt. No. 42-7 at 98:23–99:3).

The specification further indicates that none of the steps described or depicted as occurring between Figure 2C and 2D would have any effect on the co-planarity of the top of the gates and the top of the source layer. *See, e.g.*, '634 Patent at 3:41–49, Figures 2C-2D; Dkt. No. 42-7 at

98:17–103:11). Thus, Defendant's construction is inconsistent with the intrinsic evidence, and would improperly redraft the claim language. *K-2 Corp. v. Salomon S.A.*, 191 F.3d 1356, 1364 (Fed. Cir. 1999) ("Courts do not rewrite claims; instead, we give effect to the terms chosen by the patentee.").

2. Court's Construction

For the reasons set forth above, the phrase **"a plurality of trenched gates covered by said interlayer oxide film are formed on top of said source layer extending downwardly through said base layer"** is given its **plain and ordinary meaning.**

B. "the sidewalls of said trenches in said base layer"

Disputed Term	Plaintiff's Proposal	Defendant's Proposal
"the sidewalls of said trenches in said base layer"	Plain and ordinary meaning, i.e.: the portions of the source contact trenches' sidewalls which are in the semiconductor material's base layer, i.e., no requirement that "entire" sidewalls of base layer be covered in lateral contact layer	"entire sidewalls of said trenches in said base layer"

1. Analysis

The phrase "the sidewalls of said trenches in said base layer" appears in Asserted Claim 1 of the '634 Patent. The parties dispute whether the entire sidewalls of the source contact trenches in the base layer must be covered by the lateral contact layer, as Defendant contends. The intrinsic evidence indicates that Defendant's construction is correct. Referring to Figure 1, the specification first introduces the prior art MOSFET where "the P+-type region is located *only at* source contact trench bottom." '634 Patent at 1:33–35 (emphasis added).

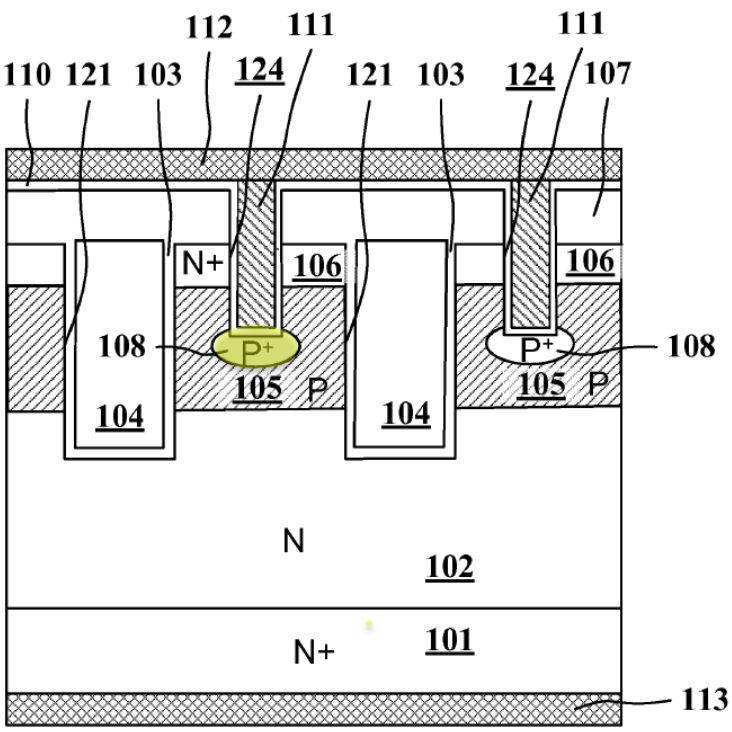

Fig. 1 (PRIOR ART)

Id. at Figure 1 (highlight added). As shown in Figure 1, the P+-type region 108 is located mostly at the bottom of the source contact trench 124. Figure 1 also shows a small portion of region 108 located adjacent to a portion of the sidewall at the corner of the source contact trench.

In contrast, the specification discloses a MOSFET with distinct base contact and lateral contact layers, wherein the base contact layer primarily covers the bottom of the source contact trench and the lateral contact layer covers the entirety of the remaining sidewalls of the source contact trench 224 located within the base layer. *Id.* at 1:43–45.

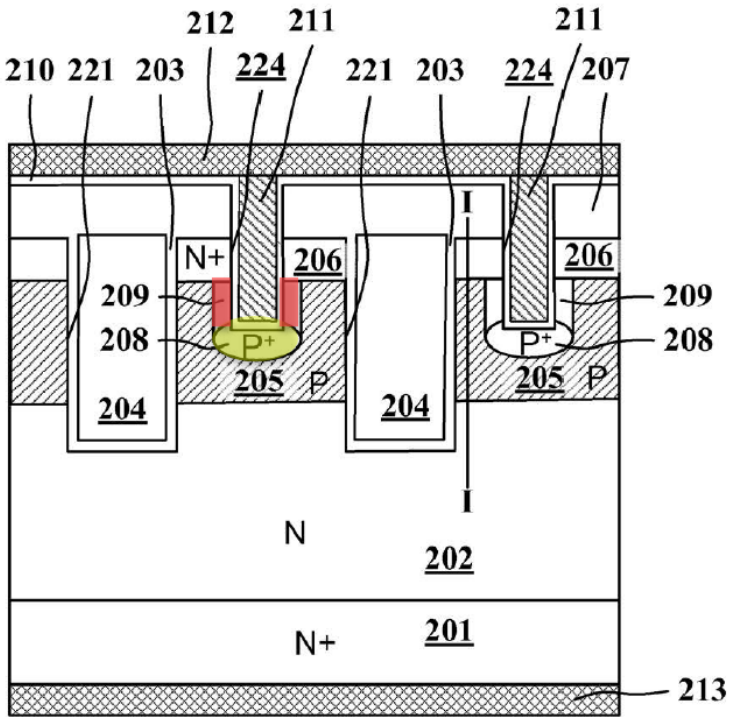

Fig. 2G

Id. at Figure 2G (highlight added). As illustrated in red in Figure 2G, the entire sidewall of the source contact trench (224) in the base layer (205) is covered by the lateral contact layer (209), and the base contact layer (208) covers the bottom of the source contact trench. The specification states "[t]he P+-type base layer (208) and the P*-type lateral contact layer (209) are formed at the bottom and sidewall of the source contact trenches (224) respectively." *Id.* at 5:9–12.

The prosecution history provides further support for Defendant's construction. *See Vivid Techs, Inc. v. Am.. Science & Eng'g, Inc.*, 200 F.3d 795, 804 (Fed. Cir. 1999) ("The prosecution history is often helpful in understanding the intended meaning as well as the scope of technical terms, and to establish whether any aspect thereof was restricted for purposes of patentability."). As originally filed, Claim 1 stated, "each of the source contact trenches has a lateral contact layer at a sidewall." (Dkt. No. 42-12 at 67-68). As discussed in more detail below, Claim 1 was amended

by the examiner to place it in condition for allowance. There are three key differences between Claim 1 as originally presented and as amended. First, the lateral contact layer must be at the sidewall, not just a sidewall. Second, the sidewalls must be covered by the lateral contact layer. And third, the lateral contact layer is found at the sidewalls within the base layer of the device. In other words, for the sidewalls of the source contract trench to be "*covered by"* the lateral contact layer, the lateral contact layer must be present on the entire sidewall.

Regarding the procedural history for the claim amendment, the examiner initiated an interview and proposed the amendment to Claim 1 to clarify the location and extent of the lateral contact layer as "wherein the sidewalls of said trenches in said base layer *are covered by* the lateral contact layer." (Dkt. No. 42-12 at 30) (emphasis added). During the interview, the patentee and examiner "discussed novelty of [the] invention (lateral contact covering *entire* trench sidewall), prior art and claim language on 7/15/09 resulting in proposed claim language (via e-mail) 7/20/09, and further telephone conversation of 7/20/09." *Id.* at 28 (emphasis added).

Following the interview, the examiner provided the following reasons for allowance: "Claim 1 limits the trenched MOSFET to having a trench in which the base and *entire* sidewall are covered with the lateral contact layer. Kobayashi (US 6,888,196) covers the base and *only a portion of the trench sidewall with the lateral contact layer*." *Id.* at 30 (emphasis added). The examiner's use of the "*entire* sidewall" language to distinguish Kobayashi confirms the disclosure in the specification and the claim language "covered by." (*See, e.g.*, '634 Patent at 5:9–12, 3:50–4:6, Figures. 2G, 3B). Indeed, the prosecution history indicates that like the prior art identified in the specification (Figure 1 of the '634 Patent), Kobayashi discloses a lateral layer that is only on part of the sidewalls of the base layer, meaning it does not *cover* the sidewalls in the base layer. Accordingly, the Court finds that the claim should be construed to have a lateral contact layer that

extends over the entire sidewall in the base layer (*i.e.*, the sidewalls are "covered"). Otherwise, the claim would include the features of the prior art that were distinguished in the prosecution history.

Plaintiff cites *Salazar v. Procter & Gamble Co.*, 414 F.3d 1342, 1345 (Fed. Cir. 2005), and argues that statements made about this disputed claim term should be given no weight. (Dkt. No. 42 at 16). However, the facts in *Salazar* are distinguishable, because the Federal Circuit described the examiner's statements as "unilateral statements." *Salazar*, 414 F.3d at 1347. "The first and only time the examiner discussed the 'elastic' limitation was in the Examiner's Statement of Reasons for Allowance." *Id.* at 1344. Unlike *Salazar*, the examiner and patentee discussed or referenced the sidewall limitation on more than one occasion. First, when the examiner proposed, and the patentee acquiesced, to an amendment to the claim to avoid prior art. Second, when the examiner and the patentee conducted an interview to "discuss[] novelty of the invention (lateral contact covering entire trench sidewall)." And finally when the examiner submitted its reasons for allowance. (Dkt. No. 42-12 at 30). Thus, the patentee was aware and agreed to the same understanding of the claimed invention as the examiner, which was set out in more than just the reasons for allowance. *Semcon IP Inc. v. ASUSTeK Comput., Inc.*, No. 2:18-cv-00193-JRG, 2019 U.S. Dist. LEXIS 114957, at *18 (E.D. Tex. July 10, 2019) ("Acquiescence to an examiner's position does not require a formal and express statement . . . .")

Plaintiff also argues that Defendant's construction would be improper because it would require the "lateral contact layer" to cover the sidewalls at the source layer and the interlayer oxide film, thereby excluding all disclosed embodiments of the invention. (Dkt. No. 42 at 15). Referring to the following annotated Figure 2E below, Plaintiff argues that the base layer covers less than the "entire" sidewalls of the source contact trenches. *Id.* at 15. Specifically, Plaintiff contends that the base layer does not cover the portions of the sidewalls at the source layer (206) or the inter

layer oxide film (207). *Id.*

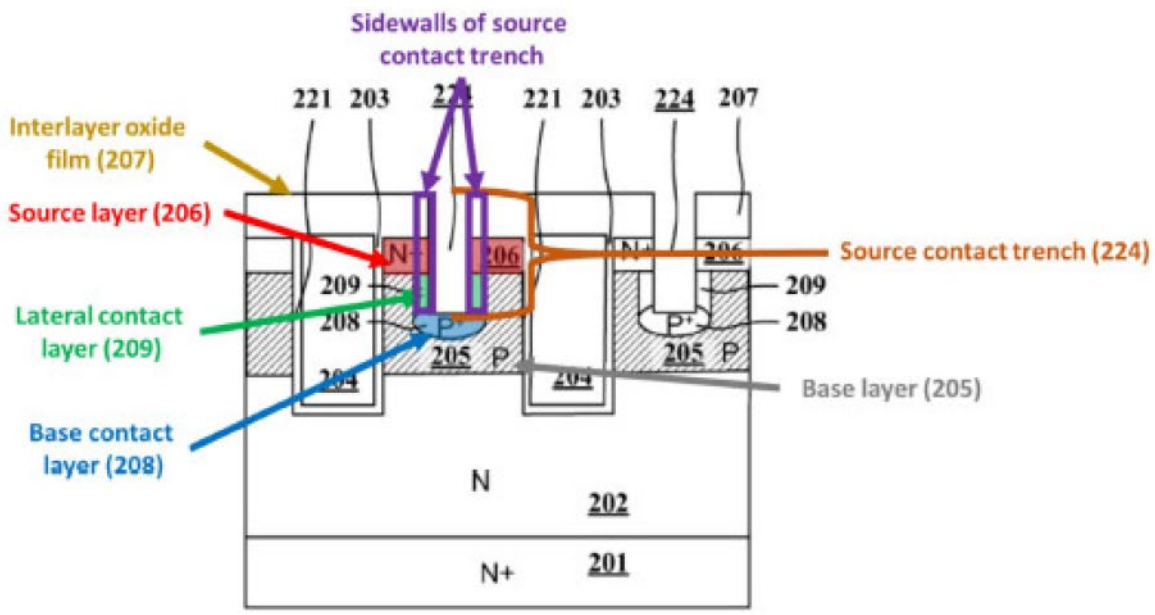

Fig. 2E

Id. According to Plaintiff, the literal understanding of the examiner's apparent interpretation of the claim would exclude all disclosed embodiments.

The Court disagrees that this is a "literal" understanding of the examiner's interpretation, because Plaintiff fails to consider the surrounding claim language. The Court's construction requires the entire sidewalls of the trenches *in the base layer* to be covered by the lateral contact layer. In other words, the construction only requires entire sidewall in base layer 205, and not in the source layer 206, or interlayer oxide film 207 to be covered. Thus, the Court's construction does not exclude any embodiments, and accurately reflects the intrinsic evidence. To the extent that Defendant argues that the lateral contact layer must cover the sidewalls at the source layer or the interlayer oxide film, the Court rejects that argument.

2. Court's Construction

For the reasons set forth above, the Court construes the term **"the sidewalls of said trenches in said base layer"** to mean **"entire sidewalls of the trenches in the base layer."**

C. "substantially square-shaped"

Disputed Term	Plaintiff's Proposal	Defendant's Proposal
"substantially square-shaped"	Plain and ordinary meaning, i.e.: from a top-view cross-sectional perspective, having a largely or essentially square shape, other than the recited "rounded corners"	"from a top-view cross-sectional perspective, a square-shape that satisfies a design rule that the greatest difference between the longest distance and the shortest distance between the circular trench contacts and the trenched gates is significantly less than a predefined value"

1. Analysis

The term "substantially square-shaped" appears in Asserted Claim 1 of the '409 Patent. The parties dispute whether the "square shape" must meet a "design rule," as Defendant contends. Referring to the top view of a prior art closed cell unit in Figure 1A, the specification states the following:

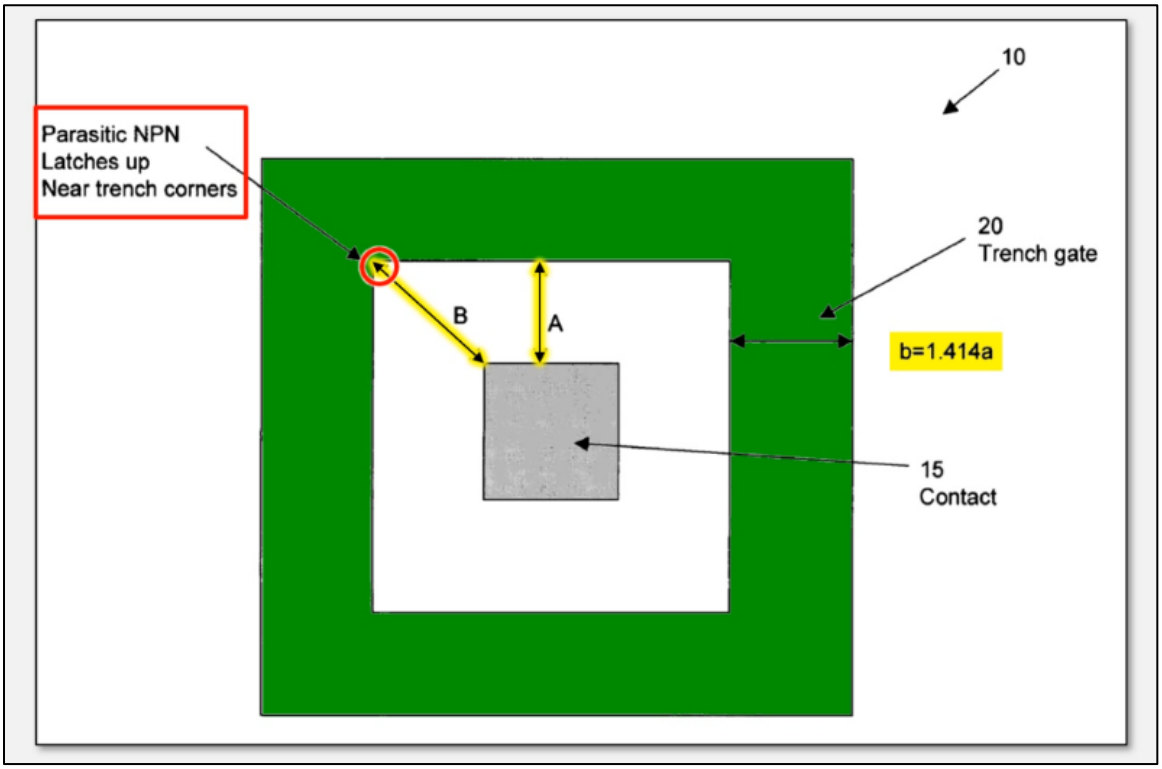

> [T]he shortest distance between the peripheral sides of the metal contact 15 to the trenched gates is longer from the corner of the metal contact 15 to the corner of the trenched gates. Specifically, the shortest distance between the peripheral sides of the contact metal 15 to four sides of the trenched gate is "A". In contrast, the shortest distance between the metal-contact 15 to the corners of the trenched gates is "B" where:
>
> B=1.414A (1)
>
> Referring to FIG. 1D for a cross sectional view for showing an implanting step to form the metal contact dopant P+ region 25. The resistance R between the channel and the P+ region 25 is proportional to the space, i.e., the shortest distance between the metal contact region 15 and the trenched gates 20. Therefore, the space between the metal contact 15 and the trenched gates 20 as represented by the distances A and B, plays an important role in determining the device ruggedness. For this reasons, there are weak points of the MOSFET device due the non-uniform space between the square contact and the trench in the closed cell. *These weak points occur at the four corners that result in low avalanche current and reduced device ruggedness due to the parasitic N+PN latches up near the trench corners when I*R>0.7 volts*. When bias between Base P(Pwell) and emitter N+(n+ source) of the parasitic N+PN is larger than 0.7 volts, P/N+ diode will be turned on, and thus automatically trigger turn-on of the parasitic N+PN bipolar.
>
> *Therefore, there is still a need in the art of the semiconductor device fabrication, particularly for trenched power MOSFET design and fabrication, to provide a novel cell structure, device configuration and fabrication process that would resolve these difficulties and design limitations.*

'409 Patent at 1:30–62 (emphasis added), Figure 1A (annotated). To address this need, the specification states that an aspect of the present invention is to provide a "new and improved closed cell configuration of a semiconductor power device with a design rule that the greatest difference between the longest distance and the shortest distance between the source/body contact and the trenched gate is significantly less than a predefined value to achieve an improved device ruggedness." *Id.* at 2:24–30. An exemplary embodiment of the new and improved closed cell is shown in Figure 3.

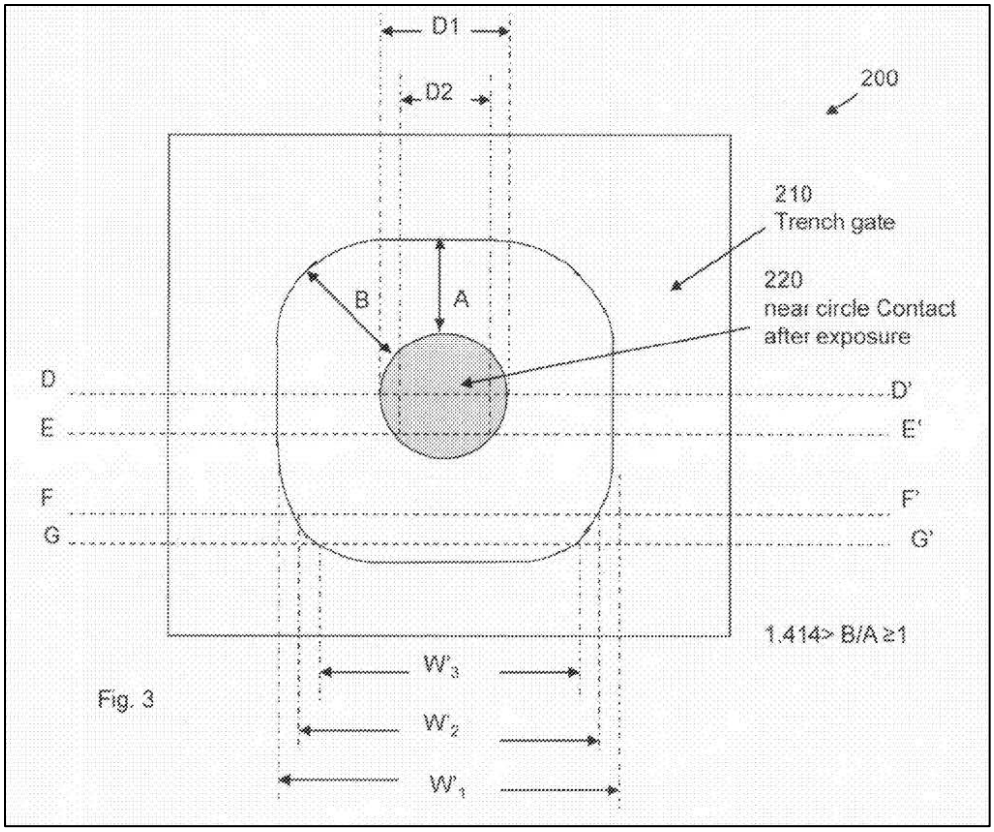

Id. at Figure 3. The specification describes the new and improved closed cell illustrated in Figure 3 as follows:

> The doped contact region 220 is formed with substantial circular shape and the trenched gate is formed with rounded corners 215. The distance from the edge of the circular doped contact region 220 to the trenched gate 200 including the distance B to the rounded corners 215 and to the distance A to the edges of the trenched gate are substantially the same, i.e., B=A. Therefore, the ratio of B/A is substantially kept near 1.0 and certainly smaller than 1.414. The weak spots near the corners of the trenched gate that caused reduced device ruggedness are therefore eliminated.

Id. at 4:7–17. As indicated, a point of novelty of the invention is the space or separation between the circular trench contact and trenched gates, and is not specifically limited to a "design rule."

Accordingly, the Court agrees that the term "substantially square-shaped" should not be limited to a "design rule." Indeed, Defendant attempts to read the "design rule" or "design layout" into multiple terms, this one being the first. Defendant does not cite to any clear and unmistakable

disclaimer that would justify deviating from the plain and ordinary meaning of "substantially square-shaped." Defendant cites to the portion of the specification discussed above, and argues it requires a design layout. (Dkt. No. 58 at 19-20) (citing '409 Patent at 2:5–7, 2:24–30, 3:17–34, 4:57–60). Defendant also cites to the specification at column 2, lines 5-7, which discusses a purpose of the invention to "make the space between the trenched gate and the metal contact more uniform." (Dkt. No. 58 at 20). Defendant argues that "having merely an essentially square shape from the top view would not satisfy the design rule requirement of making the said space more uniform." *Id.* (citing Dkt. No. 42-6 at ¶ 106).

As discussed above, the Court generally agrees with Defendant that the spacing or separation between the circular trench contact and trenched gates is a critical aspect to the disclosed invention. However, the passages cited by Defendant do not even mention squares. Nor do these passages warrant reading a "design rule" into the apparatus claim. Indeed, the only passage cited by Defendant that includes a reference to "design rule" does not discuss squares.

Defendant also makes the conclusory argument that Plaintiff distinguished another square-shaped cell with rounded corners during prosecution of the '409 Patent. Defendant argues that the claims were amended to include a square-shaped closed cell with rounded corners to overcome U.S. 6,541,818 to Pfirsch ("Pfirsch"). (Dkt. No. 58 at 19) (citing Dkt. No. 42-16 at 77). The Court disagrees that Plaintiff distinguished Pfirsch as lacking a "design rule," as Defendant appears to contend. Instead, the patentee distinguished Pfirsch because it included a "square contact with rounded corner," which was distinguishable from a "circular trench contact." Figure 5 from Pfirsch and Figure 3 from the 409 Patent illustrate the different shapes for the contact:

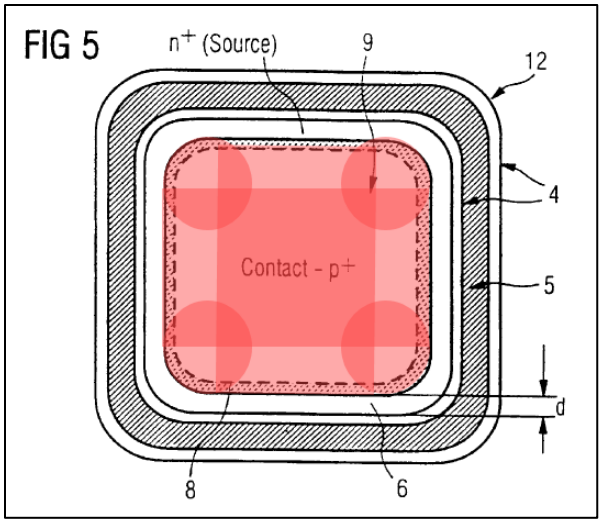

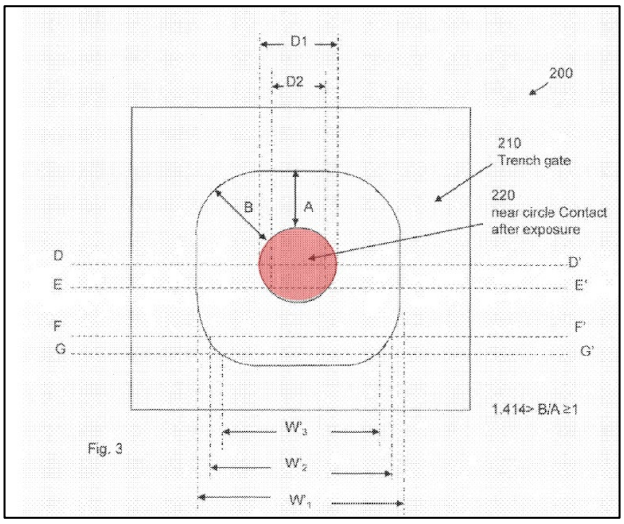

Comparing shape of "9" in Figure 5 of Pfirsch to shape of "220" in Figure 3 of 409 Patent. (highlight added).

If "design rule" was a limitation, the patentee would have used the phrase to distinguish Pfirsch. Accordingly, the Court finds that there was no clear and unmistakable disclaimer that warrants reading a "design rule" limitation into the claims. *Johnson Worldwide Assoc., Inc. v. Zebco Corp.*, 175 F. 3d 985 (Fed. Cir. 1999) ("[C]laim terms cannot be narrowed by reference to the written description or prosecution history unless the language of the claims invites reference to those sources."). The term "substantially square-shaped" is unambiguous, is easily understandable by a jury, and should be given its plain and ordinary meaning. *Aventis Pharms., Inc. v. Amino Chems. Ltd.*, 715 F.3d 1363, 1373 (Fed. Cir. 2013) ("There is a heavy presumption that claim terms are to be given their ordinary and customary meaning.").

Finally, Plaintiff argues that Defendant's "predefined value" language renders the construction essentially meaningless, because there will always be an arbitrarily large number that will be big enough such that the "greatest difference between the longest distance and the shortest distance between the circular trench contacts and the trenched gates is significantly less" than that number. (Dkt. No. 42 at 20). The Court agrees. Accordingly, the Court rejects this language in

Defendant's construction.

2. Court's Construction

For the reasons set forth above, the term **"substantially square-shaped"** is given its **plain and ordinary meaning.**

D. "rounded corners" and "circular trench contact"

Disputed Term	Plaintiff's Proposal	Defendant's Proposal
"rounded corners"	Plain and ordinary meaning, i.e.: corners having a curved shape (i.e., like a portion of a circle or oval)	"corners that are truncated by design layout and then rounded"
"circular trench contact"	Plain and ordinary meaning, i.e.: trench contact having a form shaped like a circle from a top-view cross-sectional perspective	"trench contact that is a circle by design layout"

1. Analysis

The term "rounded corners" appears in Asserted Claim 1 of the '409 Patent. The term "circular trench contact" appears in Asserted Claim 1 of the '409 Patent. Regarding the term "rounded corners," the parties dispute whether the "rounded corners" must be truncated by design layout and then rounded, as Defendant contends. (Dkt. No. 42 at 21). Regarding the term "circular trench contact," the parties dispute whether the trenched contact is a "circle by design layout," as Defendant contends.

Defendant argues that the specification states that, to form the "rounded corners" in Figure 3, truncated corners are first formed by "design layout." (Dkt. No. 58 at 22) (citing '409 Patent at 4:53–64, 2:10–20). Defendant contends that the truncated corners become rounded after exposure during photolithography. (Dkt. No. 58 at 22) (citing '409 Patent at 4:53–64). Defendant also argues that Claim 1 was amended during prosecution to add "rounded corners" to distinguish the closed cells of Pfirsch. (Dkt. No. 58 at 22) (citing Dkt. No. 42-16 at 80). Defendant further contends that the patentee characterized the "rounded corners in the amended claim 1" as the "structural features

. . . shown in Fig. 3" of the '409 Patent. (Dkt. No. 58 at 23). Defendant also argues that expert evidence is consistent with its construction. *Id.* (citing Dkt. No. 42-6 at ¶¶ 88, 91).

Defendant further argues that Figure 2 depicts a mask layout of an embodiment of the claimed invention wherein the contact 120 is square. (Dkt. No. 58 at 24). Defendant contends that the "square contact [of Figure 2] becomes approximately circular shaped" through the "process for manufacturing the semiconductor power device." *Id.* (citing '409 Patent at 4:53–56). According to Defendant, a POSITA would understand that both the circular shaped trench contact and the truncated corners would be "formed by design layout not process. . . . Such configuration is formed . . . because of the photolithography." (Dkt. No. 58 at 24) (citing Dkt. No. 42-6 at ¶ 96; '409 Patent at 4:57–64).

Defendant also argues that during prosecution the patentee amended the claim to distinguish from Pfirsch and Blanchard. (Dkt. No. 58 at 25) (citing Dkt. No. 42-16 at 133). Defendant contends that the patentee stated that "the trenched contact shape of the Schottky diode in Blanchard is square, rectangular, hexagonal or octagonal (Figs. 4A-4E, 8, 9A-9D and 10) shape but not circular shape as the present patent application." (Dkt. No. 58 at 25) (citing Dkt. No. 42-16 at 153).

The Court disagrees with Defendant's arguments and characterizations. The specification refers to two embodiments: (1) MOSFETs with cells having "rounded corners" and (2) MOSFETs where the cells have "truncated corners." '409 Patent at Abstract ("truncated corners or rounded corners"), 2:2–3 ("truncated corner or rounded corner layout"), 3:32–35 ("Fig. 2 [is] a top view of a closed cell configuration . . ." where "[t]he closed cell is surrounded by a trenched gate 110 that has a truncated corners"), 4:4–9 ("Fig. 3 [is] another embodiment of this invention wherein a closed cell unit includes trenched gate 210 … [and] the trenched gate is formed with rounded

corners."), Figures 2-3. Similarly, the claims reflect the two distinct "rounded" and "truncated" embodiments. Specifically, independent Claim 1 is directed to the cell having "rounded corners" and independent Claim 6 is directed to the cell having "truncated corners." '409 Patent at 5:12, 6:16.

Defendant incorrectly argues that the "rounded corners" must be truncated by design layout and then rounded. Contrary to Defendant's argument, all of the cited portions are in passages that discuss the "process for manufacturing" or "manufacturing process." '409 Patent at 2:10–20, 4:53–62. The Asserted Claim is an apparatus claim, and is not limited to products made by a particular process. *Abbott Lab'ys v. Sandoz, Inc.*, 566 F.3d 1282, 1291 (Fed. Cir. 2009) (acknowledging that "true product claims" are "broader" in scope than product-by-process claims); *Cont'l Circuits LLC v. Intel Corp.*, 915 F.3d 788, 799 (Fed. Cir. 2019) ("Generally, a novel product that meets the criteria of patentability is not limited to the process by which it was made.") (citation omitted).

Simply stated, the term "rounded corners" in Claim 1 is directed to *what* "rounded corners" are, not *how* the "rounded corners" were made. Indeed, Defendant's construction could result in a scenario where one MOSFET is infringing and a second identical MOSFET is not, because the first has corners that are truncated by design layout and then rounded, while the other has the exact same corners but those were rounded otherwise. *See In re Thorpe*, 777 F.2d 695, 697 (Fed. Cir. 1985) ("The patentability of a product does not depend on its method of production.").

Defendant also argues that its construction is compelled by the prosecution history where the patentee distinguished the Pfirsch reference. (Dkt. No. 42-6 at ¶ 90). Contrary to Defendant's contention, the patentee did not distinguish Pfirsch on the basis of the "rounded corner" limitation. Instead, the patentee expressly admitted that Pfirsch had a "square trench gate with rounded corner." (Dkt. No. 42-16 at 80). Indeed, the patentee distinguished Pfirsch as lacking the claimed

"circular trench." *Id.* Thus, there is no clear and unmistakable disclaimer of rounded corners created by processes other than rounding occurring after using a truncated design layout.

Defendant also contends that if Plaintiff's construction for "rounded corners" is applied, Claim 1 would cover the cell layout of Figure 1A, after lithography is applied, and also cover the layout of Figure 2 of Pfirsch. This argument attempts to view the "rounded corners" term in isolation from the surrounding claim language. As discussed, the patentee characterized Pfirsch as having a "square contact," and distinguished Blanchard's Schottky anode as, *inter alia*, having a "square, rectangular, hexagonal, or octagonal" shape. (Dkt. No. 42-16 at 80, 152). However, such distinctions are already reflected in the language "circular trench contact." Defendant's argument fails to consider this distinction by focusing on the "rounded corner" term in isolation.

Turning to the term "circular trench contact," Defendant's "design layout" limitation for this term fails for the same reasons as with the terms "substantially square-shaped" and "rounded corner." Specifically, there is no clear and unmistakable disclaimer that would permit deviating from the plain and ordinary language of the claim. Indeed, the specification discloses embodiments creating the circular trench by using a square layout, rather than a circle layout. *See, e.g.*, '409 Patent at 4:53–56 ("The process for manufacturing the semiconductor power device as disclosed above thus includes a step of 'exposure through the mask' such that the square contact becomes approximately circular shaped contact"). Similar to the discussion above regarding the "rounded corners" limitation, the meaning of the term "circular trench contact" in Claim 1 is directed to what the "circular trench contact[s]" are, not how they were made.

Having resolved the parties' dispute, the Court finds that no further construction is necessary for these terms. *United States Surgical Corp. v. Ethicon, Inc.*, 103 F.3d 1554, 1568 (Fed. Cir. 1997); *see also O2 Micro Int'l Ltd. v. Beyond Innovation Tech. Co.*, 521 F.3d 1351, 1362 (Fed.

Cir. 2008). Accordingly, the terms "rounded corners" and "circular trench contact" will be given their plain and ordinary meaning. Finally, in reaching its conclusion, the Court has considered the extrinsic evidence submitted by the parties, and given it its proper weight in light of the intrinsic evidence.

2. Court's Construction

For the reasons set forth above, the terms **"rounded corners"** and **"circular trench contact"** are given their **plain and ordinary meaning.**

E. "a top surface of said semiconductor substrate"

Disputed Term	Plaintiff's Proposal	Defendant's Proposal
"a top surface of said semiconductor substrate"	Plain and ordinary meaning, i.e.: the top surface of the semiconductor material	Indefinite or, in the alternative, the top surface of the bottom base layer of the semiconductor power device

1. Analysis

The phrase "a top surface of said semiconductor substrate" appears in Asserted Claim 1 of the '409 Patent. The parties dispute whether the term "substrate" is indefinite. In the alternative, Defendant argues that the "top surface" must be "of the bottom base layer."

Specifically, Defendant argues that the term "substrate" is "alarmingly confusing." (Dkt. No. 58 at 26). Defendant contends that the intrinsic evidence does not provide any guidance to resolve the lack of clarity. *Id.* Defendant further argues that a POSITA "would not assume that 'substrate' would refer to the top surface of the entire semiconductor material when nothing in the patent indicates as much." *Id.* According to Defendant, a POSITA would understand "substrate" to refer to the bottom most layer of a semiconductor device. (*Id.* at 26-27) (citing Dkt. No. 42-6 at ¶ 116). Defendant argues that the specification states that the closed semiconductor power cell is supported on an epitaxial layer formed on top of a semiconductor substrate. (Dkt. No. 58 at 27)

(citing '409 Patent at 1:48–50). Referring to the device illustrated in Figure 2, Defendant argues that the specification states that the "closed semiconductor power cell [] supported on an epitaxial layer formed on top of a semiconductor substrate." (Dkt. No. 58 at 27) (citing '409 Patent at 3:48–50, 4:22–24.)

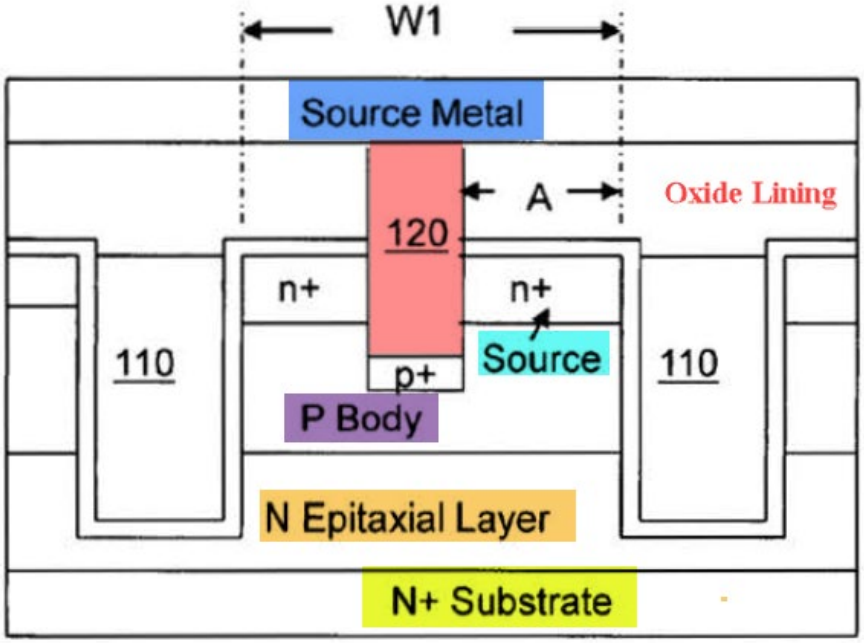

Fig. 2A (A-A' Cross Section)

'409 Patent at Figure 2A (annotated and highlight added). Defendant argues that Figure 2 illustrates that the "N+ Substrate" layer is located on the bottom layer of the power cell, and the "N Epitaxial Layer" is located above that layer. (Dkt. No. 58 at 27). Defendant contends that there is nothing below the N+ Substrate layer, which means that a substrate is the bottom or supporting layer. *Id.*

Plaintiff responds that the term "substrate" has two different meanings in the field of semiconductors. (Dkt. No. 42 at 24). Plaintiff contends that the term is used in its broader sense, and refers generally to the semiconductor material upon which or in which transistors are created

(*i.e.*, not limited to solely the bottom base layer). *Id.* (citing Dkt. No. 42-19 at 7; Dkt. No. 42-22 at 7). Plaintiff further argues that the claims do not refer to the substrate as a "layer," nor do they mention an "epitaxial layer." (Dkt. No. 42 at 24-25). According to Plaintiff, the specification shows and describes the transistors (and the circular trench) being formed in the epitaxial layer, and not the bottom "N+ substrate" layer. (Dkt. No. 42 at 25) (citing '409 Patent at 3:50–55, 4:25–30; Dkt. No. 42-7 at 197:7-198:18). Plaintiff argues that this means the "semiconductor substrate" of the claims collectively corresponds to the "epitaxial layer" and bottom "N+ substrate" layer. (Dkt. No. 42 at 25; Dkt. No. 64 at 13).

The Court finds that in the context of the intrinsic evidence, a POSITA would understand that a "top surface of said semiconductor substrate" means "a top surface of the source region." This is illustrated in Figure 2A as the "source" layer, and described in the specification as follows:

> The closed semiconductor power cell further includes a trench source-body trench contact 120 extended into the body region through the source region of the closed semiconductor power cell in contact with a p+ contact dopant region disposed immediately below the trench contact 120.

'409 Patent at 3:50–55. The specification provides a similar description for Figure 3. *Id.* at 4:25–30 ("The closed semiconductor power cell further includes a circular trench source-body trench contact 220 extended into the body region through the source region of the closed semiconductor power cell in contact with a p+ contact dopant region disposed immediately below the trench contact 120."). As illustrated in Figure 2 and 3, the claim language recites that the "hole opened" from the top surface extends into the recited "source and body regions." Moreover, the independent claims recite "a plurality of trenched gates surrounding a plurality of transistor cells *formed in a semiconductor substrate*." '409 Patent at Claims 1, 6, 11–13 (emphasis added).

Accordingly, the Court rejects Defendant's construction, because it is inconsistent with the embodiments in the specification. Indeed, Defendant's expert concedes that none of the disclosed

embodiments include a hole in the N+ substrate layer, and that the contact trench does not penetrate down to the N+ substrate layer. (Dkt. No. 42-7 at 201:10-202:3, 203:18-204:3). Thus, Defendant's interpretation of "substrate" would exclude all disclosed embodiments. *On-Line Techs., Inc. v. Bodenseewerk Perkin-Elmer GmbH*, 386 F.3d 1133, 1138 (Fed. Cir. 2004) ("[A] claim interpretation that excludes a preferred embodiment from the scope of the claim is rarely, if ever, correct.") (citation omitted). Thus, the Court finds that Defendant failed to prove by clear and convincing evidence that the phrase is indefinite. The Court further finds that the term "substrate" should not be construed to mean the "bottom base layer of the semiconductor power device."

2. Court's Construction

The Court finds that the phrase **"a top surface of said semiconductor substrate"** is not indefinite, and gives the phrase its **plain and ordinary meaning**.

F. "with said source region and body region disposed between a gate oxide lining of said trenched gates and all circumferential points of the circular trench contact"

Disputed Term	Plaintiff's Proposal	Defendant's Proposal
"with said source region and body region disposed between a gate oxide lining of said trenched gates and all circumferential points of the circular trench contact"	Plain and ordinary meaning, i.e.: all around the circumference of a circular trench contact, from a cross-sectional perspective, source and body regions are located between the circular trench contact and the gate oxide lining of the trenched gates	"at all circumferential points along the sides of the circular trench contact, said source and body regions are located between the circular trench contact and the gate oxide lining of the trenched gates"

1. Analysis

The phrase "with said source region and body region disposed between a gate oxide lining of said trenched gates and all circumferential points of the circular trench contact" appears in Asserted Claim 1 of the '409 Patent. The parties dispute whether the claim requires that the source region and the body region be disposed between the gate oxide lining of the trench gates at all

points around the circular trench contact, as Defendant contends.

Defendant argues that the claim's use of "all" indicates that at every point around the circular trench contact there is a source region and a body region between the trench gate oxide lining. Specifically, Defendant provides the following figure and argues that the claim requirements are satisfied where the figures are colored blue, because all around the circumference of the circular trench contact the source region and the body region are disposed between the trench gate oxide lining (colored yellow).

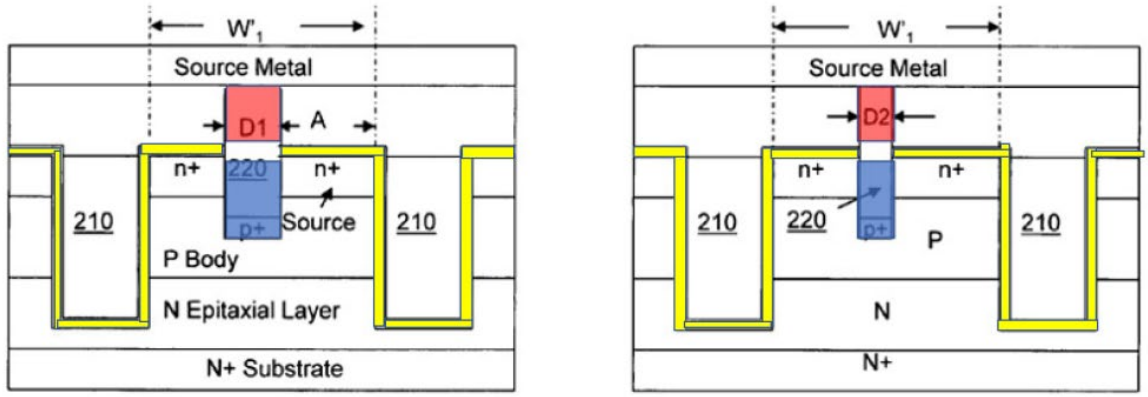

Fig. 3A (D-D' Cross Section) Fig. 3B (E-E' Cross Section)

(Dkt. No. 58 at 29). Defendant further argues that the claim requires that all circumferential points of the circular trench contact, not some points, be disposed between the source region and the body region and the trench gate oxide lining. *Id.* According to Defendant, the red shaded areas in the figures above illustrate where this is not the case. *Id.* Defendant argues that in these locations, the circumferential points of the circular trench contact are nowhere near the source region, the body regions, or the trench gate oxide lining. *Id.*

The Court rejects Defendant's construction. Defendant does not explain why the 2D circumference of a circle refers to all points on the sides of a 3D cylinder, as its construction implies. Moreover, Defendant expressly admits that Figures 3A-3B are excluded under its

construction. This argument is contrary to the specification's description that "FIGS. 3A, 3B, 3C and 3D show three cross sectional views of the close semiconductor power cell" and depict that "[t]he circular trench contact 220 is disposed at a distance away from a gate oxide lining of said trench gate from all circumferential points of the circular trench contact." '409 Patent at 4:17–33.

Defendant's position is also contradicted by the prosecution history. The term was added in response to the examiner's rejection over Pfirsch in view of Iman, which focused on the 2D top view circular contact of Iman's Figs. 9 and 10. (Dkt. No. 42-16 at 91-95).

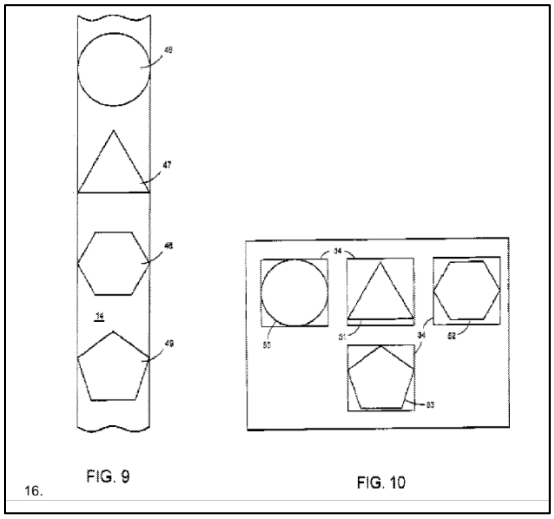

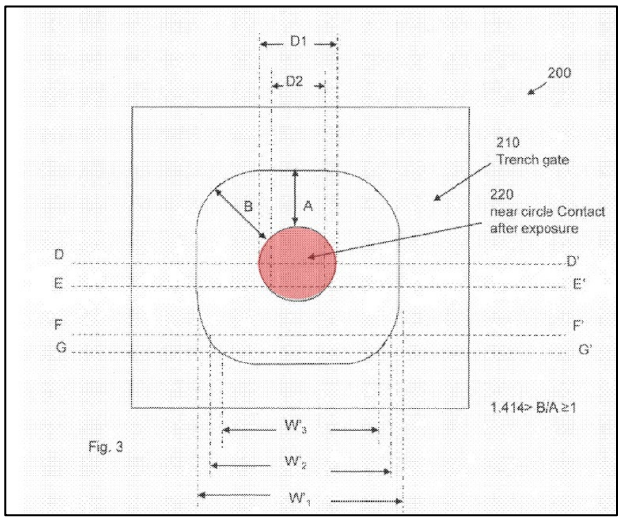

Thus, the patentee distinguished the 2D top view of the amended claim's circular trench from the 2D top view of Iman's "zero distance" cells. *Id.* at 121-122. Accordingly, the Court rejects Defendant's construction.

2. Court's Construction

For the reasons set forth above, the phrase **"with said source region and body region disposed between a gate oxide lining of said trenched gates and all circumferential points of the circular trench contact"** is given its **plain and ordinary meaning.**

G. "plurality of source contact trenches . . . with vertical sidewalls substantially perpendicular to a top epitaxial surface within said source regions" and "a plurality of trench source contacts comprising a plurality of sidewalls, two of said sidewalls substantially perpendicular to a top surface of said source regions"

Disputed Term	Plaintiff's Proposal	Defendant's Proposal
"plurality of source contact trenches . . . with vertical sidewalls substantially perpendicular to a top epitaxial surface within said source regions"	Plain and ordinary meaning, i.e.: in the second insulating layer and source layer, the source contact trench has sidewalls that are largely or essentially perpendicular to the top of the epitaxial layer (the surface of the semiconductor in which the trenches have been etched into), i.e., no requirement as to "entire/whole" trench in source region being substantially perpendicular	"a plurality of source contact trenches … with vertical sidewalls substantially perpendicular to a top epitaxial surface within [entire/whole] said source regions"
"a plurality of trench source contacts comprising a plurality of sidewalls, two of said sidewalls substantially perpendicular to a top surface of said source regions"	Plain and ordinary meaning, i.e.: substantially perpendicular to a top surface of said source regions" means essentially perpendicular to the top of the source regions (i.e., the surface of the semiconductor in which the trenches have been etched into). No requirement that entire/whole source region have substantially perpendicular sidewalls.	a plurality of trench source contacts comprising a plurality of sidewalls, two of said sidewalls substantially perpendicular to a top surface of said source regions within [entire/whole] said source regions

1. Analysis

The phrase "plurality of source contact trenches . . . with vertical sidewalls substantially perpendicular to a top epitaxial surface within said source regions" appears in Asserted Claim 1 of the '346 Patent. The phrase "a plurality of trench source contacts comprising a plurality of sidewalls, two of said sidewalls substantially perpendicular to a top surface of said source regions" appears in Asserted Claim 16 of the '346 Patent. The parties dispute whether the words "entire/whole" should be added to the claim language, as Defendant contends.

Defendant's constructions repeat the claim language but adds an unrecited "entire/whole" limitation. Defendant correctly states that the element at issue describes a two-part structure for

source contact trenches: the first part with vertical sidewalls and the second part with tapered sidewalls. For example, Claim 1 recites the first part as "penetrating through said second insulating layer and said source regions with vertical sidewalls substantially perpendicular to a top epitaxial surface within said source regions." The second part is recited as "extending into said body regions with tapered sidewalls with respect to said top surface of said epitaxial layer." An embodiment of this claim language is illustrated in Figures 2 and 3C.

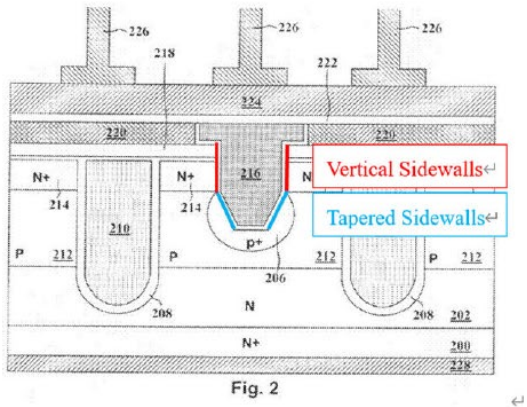

Fig. 2

Fig. 2 of US'346 illustrating Claim 1 (annotated)

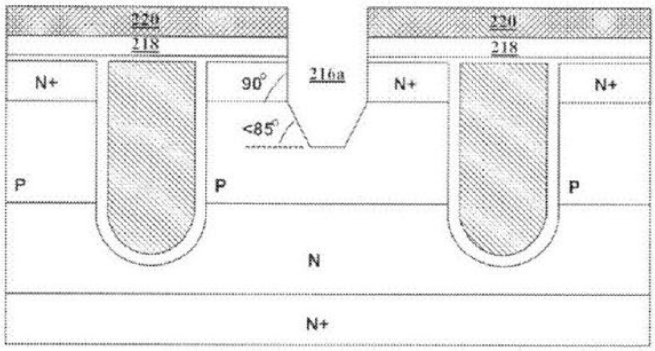

Fig. 3C

'346 Patent at Figure 2 and 3C. As indicated, the two parts are defined in terms of different layers: the first part "penetrat[es] through said second insulating layer and said source regions" while the second part "extend[s] said body regions." Defendant argues that the specification describes the invention as having substantially vertical sidewalls through the N+ source region, which Defendant contends means "the entire sidewall within the source region." (Dkt. No. 58 at 31) (citing '346 Patent at 3:54–56, 4:12–21).

Defendant further argues that the patentee distinguished the partially vertical, partially tapered structure of the claimed source contact trenches over the less specific, gradually curved structure disclosed in the prior art. (Dkt. No. 58 at 31-32) (citing Dkt. No. 42-5 at 72). Specifically, Defendant provides the following excerpt as well as Figure 3F from the prior art U.S. Patent No.

5,629,543. (Dkt. No. 42-23 ("Hshieh"):

Furthermore, even if one were to consider the P+ deep region of Hshieh to be the claimed source contact trench, the structure of Hshieh's P+ deep region is fundamentally different from that of the claimed source contact trench. Hshieh's P+ deep region lacks the claimed, "penetrating through said second insulating layer and said source regions with vertical sidewalls substantially perpendicular to a top epitaxial surface within said source regions, and further extending into P-body regions with tapered sidewalls with respect to said top surface of said epitaxial layer." There is not enough structure illustrated in Hshieh's P+ deep region of Fig. 3F to determine the claimed tapered structure.	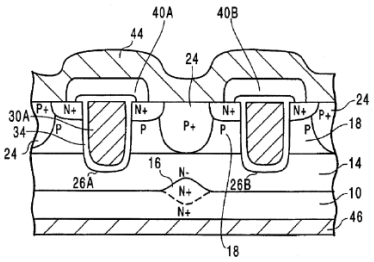

(Dkt. No. 58 at 32) (citing Dkt. No. 42-5 at 73) (highlight added). Defendant makes the conclusory and unsupported argument that these statements support its "proposed correction that the source contact trenches of the claimed invention must have substantially vertical sidewalls within the entire or whole source regions." (Dkt. No. 58 at 32).

The Court finds that Defendant failed to provide a persuasive reason to read an "entire/whole" limitation into the claims. First, the words "entire/whole" do not appear anywhere in the intrinsic evidence. Contrary to Defendant's assertion, the patentees did not distinguish the prior art based an "entire/whole" limitation. Instead, the patentees argued that Hsieh did not illustrate "enough structure … to determine the claimed tapered structure." This is not a disclaimer justifying a "whole/entire" limitation, because it addressed a different claim element ("tapered sidewalls"). Moreover, the patentees said nothing about "vertical sidewalls" let alone "entire/whole." Instead, the patentees quoted the same language that is currently disputed. This is not a clear and unmistakable disclaimer.

Finally, Defendant's cite to the specification simply repeats the claim language and does not include an additional "whole/entire" requirement. For example, Defendant argues that the specification explains that "when etching *through . . . [the] N+ source region, sidewalls of source-body contact trench 216a are substantially vertical along the N+ source region*." (Dkt. No. 58 at

31) (citing '346 Patent at 4:12-21) (emphasis in original). Again, this is the claim language. There is no mention of "entire/whole" in the specification. Accordingly, Defendant failed to provide a persuasive reason to read an "entire/whole" limitation into the claims. It would be improper for the Court to rewrite the claims as Defendant contends. *K-2 Corp.*, 191 F. 3d at 1364 ("Courts do not rewrite claims; instead, we give effect to the terms chosen by the patentee.").

2. Court's Construction

For the reasons set forth above, the phrase **"plurality of source contact trenches . . . with vertical sidewalls substantially perpendicular to a top epitaxial surface within said source regions"** and the phrase **"a plurality of trench source contacts comprising a plurality of sidewalls, two of said sidewalls substantially perpendicular to a top surface of said source regions"** are given their **plain and ordinary meaning.**

H. "plurality of source contact trenches . . . further extending into said body regions with tapered sidewalls with respect to said top surface of said epitaxial layer" and "a plurality of trench source contacts comprising a plurality of sidewalls, . . . two other sidewalls tapered with respect to said source regions"

Disputed Term	Plaintiff's Proposal	Defendant's Proposal
"plurality of source contact trenches . . . further extending into said body regions with tapered sidewalls with respect to said top surface of said epitaxial layer"	Plain and ordinary meaning, i.e.: as the source contact trench extends into the body region, it has sidewalls that are tapered (that is, the source contact trench in the body has narrower portions than portions in the source region), i.e., no requirement as to "entire/whole" trench in body region be tapered	"a plurality of source contact trenches … further extending into said body regions with tapered sidewalls [within entire/whole body regions] with respect to said top surface of said epitaxial layer"

"a plurality of trench source contacts comprising a plurality of sidewalls, . . . two other sidewalls tapered with respect to said source regions"	Plain and ordinary meaning, i.e.: tapered with respect to said source regions" means "sidewalls that are tapered with respect to the top of the source regions (i.e. the surface of the semiconductor in which the trenches have been etched into), that is, the source contact trench has narrower portions deeper in the trench. No requirement that entire/whole body region have tapered side walls.	"a plurality of trench source contacts comprising a plurality of sidewalls, . . . two other sidewalls tapered with respect to said source regions within [entire/whole] said body regions"

1. Analysis

The phrase "plurality of source contact trenches . . . further extending into said body regions with tapered sidewalls with respect to said top surface of said epitaxial layer" appears in Asserted Claim 1 of the '346 Patent. The phrase "a plurality of trench source contacts comprising a plurality of sidewalls, . . . two other sidewalls tapered with respect to said source regions" appears in Asserted Claim 16 of the '346 Patent. Similar to the previous term, the parties dispute whether the words "entire/whole" should be added to the claim language, as Defendant contends.

As with the previous disputed phrases, Defendant's constructions repeat the claim language, and then add an unrecited "entire/whole" limitation. As discussed above, the surrounding claim language provides a two-part structure. Defendant again argues that Plaintiff's plain and ordinary meaning fails to account for statements in the file history and the specification. (Dkt. No. 58 at 33). Defendant contends that the patentees "distinguished the uniquely shaped partially vertical, partially tapered structure of the claimed source contact trenches over the less specific structure disclosed in the prior art (Hshieh) cited by the Examiner." *Id.* at 34 (citing Dkt. No. 42-5 at 72-73). According to Defendant, the patentees' statement during prosecution "support" its construction. (Dkt. No. 58 at 34). Defendant further argues that its construction is consistent with the figures of the '346 Patent and with the patentees' characterizations of the invention in the patent and during prosecution. *Id.*

As discussed above, the Court agrees that the patentees distinguished the prior art by arguing that "there is not enough structure illustrated in Hshich's P+ deep region of Fig. 3F to determine the claimed tapered structure." (Dkt. No. 42-5 at 73). However, the patentees did not argue for a "entire/whole" requirement for the claimed tapered structure. Indeed, the words "entire/whole" do not appear anywhere in the intrinsic evidence. Instead, the patentees quoted the same language that is currently disputed. This is not a clear and unmistakable disclaimer that warrants reading an "entire/whole" limitation into the claims.

Defendant argues that its construction is consistent with the figures of the '346 Patent and with the patentees' characterizations of the invention in the patent and during prosecution. (Dkt. No. 58 at 34). Plaintiff correctly notes that there is an interpretation of Defendant's construction that is not consistent with the disclosed embodiments. Plaintiff also notes that Defendant's expert argues that sidewalls "are tapered within the *entire or whole body* P-body [sic] region (212)." (Dkt. No. 42 at 33) (citing Dkt. No. 42-6 at ¶ 146).

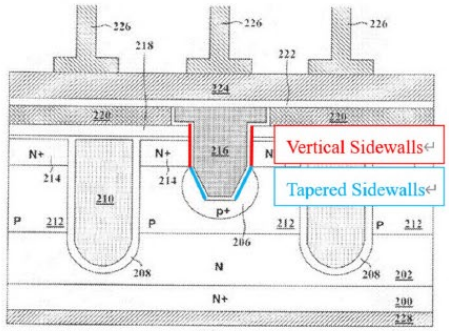

Fig. 2

Fig. 2 of US'346 illustrating Claim 1 (annotated)

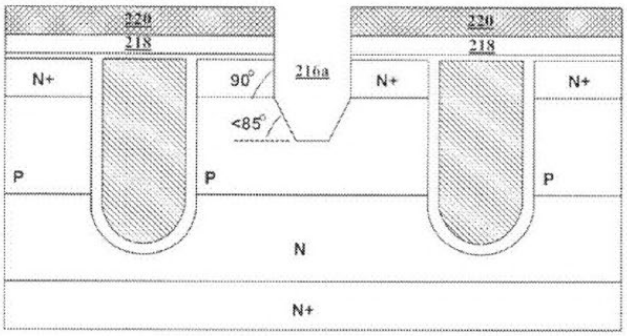

Fig. 3C

FORCE-MOS0000125 at 195-96; '346 Patent at Figs. 2, 3C.

146. Applicant's statements during prosecution indicate that applicant characterizes Figures 2 and 3C as the purported invention of the '346 Patent. As shown in annotated Figure 2, the sidewalls (blue) are tapered within the entire or whole body P-body region (212). Therefore, I

(Dkt. No. 42-6 at ¶ 146) (highlight added). Plaintiff correctly argues that Defendant's expert's annotated version of Figure 2 depicts that the "Tapered Sidewalls" extend only through a portion of body region 212, with roughly half of the vertical extent of region 212 depicted without tapered sidewalls or, any sidewalls in this bottom portion. The Court agrees that this indicates that Defendant's construction would introduce unnecessary ambiguity into the claims. More importantly, there is no mention of "entire/whole" in the specification or prosecution history.

Defendant correctly notes that the specification states that "FIGS. 3A to 3F shows a series of exemplary steps that are performed to form the inventive trench MOSFET of the present invention shown in FIG. 2." (Dkt. No. 58 at 34-35) (citing '346 Patent at 3:54–56). However, the claim language as drafted reads on the disclosed embodiments. In summary, Defendant failed to provide a persuasive reason to read an "entire/whole" limitation into the claims. It would be improper for the Court to rewrite the claims as Defendant contends. *K-2 Corp.*, 191 F. 3d at 1364 ("Courts do not rewrite claims; instead, we give effect to the terms chosen by the patentee.").

2. Court's Construction

For the reasons set forth above, the phrase **"plurality of source contact trenches . . . further extending into said body regions with tapered sidewalls with respect to said top surface of said epitaxial layer"** and the phrase **"a plurality of trench source contacts comprising a plurality of sidewalls, . . . two other sidewalls tapered with respect to said source regions"** are given their **plain and ordinary meaning.**

I. "P+ areas wrapping said sidewalls and bottom of said trench source contacts within said P-body regions"

Disputed Term	Plaintiff's Proposal	Defendant's Proposal
"P+ areas wrapping said sidewalls and bottom of said trench source contacts within said P-body regions"	Plain and ordinary meaning, i.e.: P+ region follow contours of sidewalls and bottom of trench source contact. No requirement that P+ regions completely encompass tapered sidewalls.	"P+ areas [completely encompassing/enclosing] [the two other sidewalls tapered within entire/whole body regions with respect to said source regions] and [a] bottom of [the plurality of trench source contacts] within said P-body regions"

1. Analysis

The phrase "P+ areas wrapping said sidewalls and bottom of said trench source contacts within said P-body regions" appears in Asserted Claim 17 of the '346 Patent. Similar to the preceding four terms, the parties dispute whether the claim should be modified to add an unrecited "within entire/whole body regions" limitation in relation to tapered sidewalls. The parties also dispute whether the term "wrapping" should be redrafted as "completely encompassing/enclosing."

Regarding the "wrapping" term, the specification repeatedly uses the terms "wrap" or "wrapping" in relation to "P+ areas" and "sidewalls and bottoms of [a] source contact trench." *See, e.g.*, '346 Patent at 2:54–56, 2:19–21, 3:44–47, 4:27–29. Dependent Claim 17 recites that the trench MOSFET further comprises "P+ areas wrapping said sidewalls and bottom of said trench source contacts within said P-body regions …." This is illustrated in Figure 2, with the P+ area identified as "206" (blue) and the trench source identified as "216" (brown).

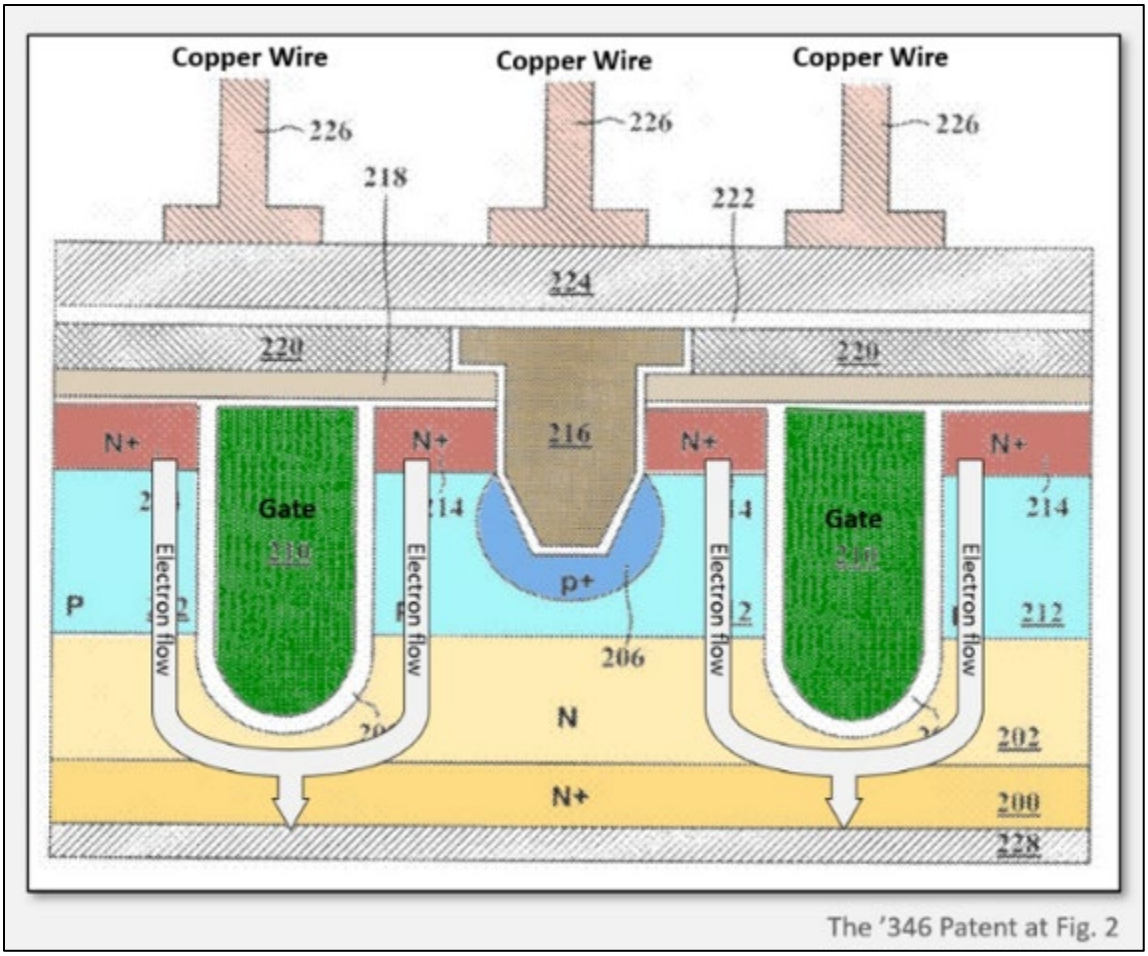

'346 Patent at Figure 2 (annotated and color added). The claim language is clear and unambiguous, and includes the disclosed embodiments. In contrast, the specification never uses the phrases "completely encompassing" or "completely enclosing." In fact, the word "completely" is not used at all. That said, the claim language is clear that the sidewalls and bottom of the trench source contact are wrapped by the P+ area within the P- body region.

Defendant cites to extrinsic dictionary definitions, and argues that its construction gives meaning to "wrapping" by clarifying that the P+ area encompasses/encloses a portion of the sidewalls and bottom of trench source contacts. (Dkt. No. 58 at 35) (citing Dkt. No. 37). Defendant also argues that the "patent contemplates the P+ areas completely encompassing or enclosing the tapered sidewalls within the body region." (Dkt. No. 58 at 36) (citing '346 Patent at 2:19–21, 2:54–

56, 4:26–29, 3:43–45). The Court finds that Defendant did not provide a persuasive reason to replace the language chosen by the patentee with the language it prefers. Indeed, Defendant argues that "[t]he P+ area must wrap around the tapered sidewalls of the trench source contact." (Dkt. No. 58 at 36). This is the claim language.

Regarding the "within entire/whole body regions" limitation, the Court rejects it for the reasons discussed above. Finally, regarding Defendant's proposed "the plurality of trench source contacts," the Court agrees with Defendant that the recited limitation applies to all of the trench sources. The parties did not brief this proposal, and it is unclear if there is an actual dispute.

2. Court's Construction

For the reasons set forth above, the phrase **"P+ areas wrapping said sidewalls and bottom of said trench source contacts within said P-body regions"** is given its **plain and ordinary meaning.**

J. "lateral contact layer"[3]

Disputed Term	Plaintiff's Proposal	Defendant's Proposal
"lateral contact layer"	If the Court addresses this term, it should adopt Force MOS's IPR construction verbatim (Citing Dkt. No. 58-6 at 11-15)	requiring a region of dopant which is implanted into sidewalls of the source contact trenches, wherein implantation may occur before or after the source contact trenches are etched, the region to have a doping concentration between the base layer doping concentration and the base contact layer doping concentration

1. Analysis

The term "lateral contact layer" appears in Asserted Claim 1 of the '634 Patent. Defendant

[3] At the time of the April 11, 2024 hearing, Plaintiff's Motion to Strike the term "lateral contact layer" from the claim construction briefing was pending before the Court. (Dkt. No. 62). During the claim construction hearing, the Court heard arguments on Plaintiff's motion. The Court then denied the motion for the reasons orally assigned. (Dkt. No. 75).

argues that this term should be construed because Plaintiff took an inconsistent claim construction position on February 27, 2024—one month after the Parties' Local Rule P.R. 4-3 filing. (Dkt. No. 66 at 5). Defendant further argues that prior to February 27th, Plaintiff maintained that all terms—including "lateral contact layer" from the '634 Patent—should be construed according to their plain and ordinary meanings. *Id.* Defendant contends that on February 27th, in a co-pending IPR on the '634 Patent, Plaintiff changed course and proposed a narrowing construction for the term "lateral contact layer" to distinguish the *Hirler* prior art in the IPR, and also argued that the term "does not adequately indicate a plain meaning." *Id.* Defendant argues that the parties have a clear dispute over the meaning of the term "lateral contact layer," and relevant evidence was only recently made available to Defendant on February 27, 2024. *Id.*

In its reply brief, Plaintiff argues that "if the Court addresses this term, it should adopt Force MOS's IPR construction verbatim, based on that very doctrine, as well as for the further reasons provided in Force MOS's Preliminary Response to the IPR." (Dkt. No. 64 at 8). The Court adopts the construction that Plaintiff presented in the co-pending IPR. In the IPR involving the '634 Patent, Plaintiff admitted that a POSITA would not understand the "plain and ordinary meaning" of "lateral contact layer" in the claims and the '634 Patent. (Dkt. No. 58-6 at 11-12). Plaintiff asked the PTAB to "construe 'lateral contact layer' as requiring a region of dopant which is implanted into sidewalls of the source contact trenches to have a dopant concentration between P and P+ ('P* doping') for an N-channel MOSFET or between N and N+ ('N* doping') in a P-channel MOSFET." *Id.* at 15 (emphasis added)). Plaintiff's argument in the IPR was made in an attempt to overcome German Patent Pub. No. DE 102004009083.

The Court agrees that the specification discloses implanting a P*-type lateral contact layer into the sidewall of the source contact trenches, where P* has more doping than the P base layer,

but less doping than the P+ base contact layer which is located at the bottom of the source contact trench. (Dkt. No. 58-6 at 10) (citing '634 Patent at 2:1–11). The Court also notes that Plaintiff argued that the specification describes optimizing the P*-type lateral contact layer doping concentration in order to achieve ohmic contact between the P*-type layer and a contact metal plug without significantly increasing threshold voltage of the device. *Id.*; Dkt. No. 42 at 8.

The Court also notes that Plaintiff argued in the IPR that because "the language of the phrase 'lateral contact layer' alone does not adequately indicate a plain meaning of the term in a manner sufficient to address the present grounds, it is appropriate to construe the term in light of the specific meaning provided in the specification." (Dkt. No. 58-6 at 12). Plaintiff then argued that the "Board should construe 'lateral contact layer' as requiring a region of dopant which is implanted into sidewalls of the source contact trenches to have a dopant concentration between P and P+ ("P* doping") for an N-channel MOSFET or between N and N+ ("N*doping") in a P-channel MOSFET." *Id.* at 15. Accordingly, the Court adopts the construction Plaintiff argued for in the IPR.

Regarding the additional language in Defendant's construction, the Court rejects it. Defendant argues that Plaintiff's IPR construction should be modified, but Defendant cites no evidence in support of the proposed modifications. (Dkt. No. 58 at 16-17). An assertion of what a POSITA would understand, without factual support, "cannot rebut other admitted evidence" because "attorney argument is not evidence." *Elbit Sys. Of Am., LLC v. Thales Visionix, Inc.*, 881 F.3d 1354, 1359 (Fed. Cir. 2018) (citation omitted).

2. Court's Construction

For the reasons set forth above, the Court construes the term **"lateral contact layer"** to mean **"requiring a region of dopant which is implanted into sidewalls of the source contact**

trenches to have a dopant concentration between P and P+ ("P* doping") for an N-channel MOSFET or between N and N+ ("N*doping") in a P-channel MOSFET"

VI. CONCLUSION

The Court adopts the constructions above for the disputed terms of the Asserted Patents. Furthermore, the parties should ensure that all testimony that relates to the terms addressed in this Order is constrained by the Court's reasoning. However, in the presence of the jury the parties should not expressly or implicitly refer to each other's claim construction positions and should not expressly refer to any portion of this Order that is not an actual construction adopted by the Court. The references to the claim construction process should be limited to informing the jury of the constructions adopted by the Court.

SIGNED this 12th day of June, 2024.

ROY S. PAYNE
UNITED STATES MAGISTRATE JUDGE