Trials@uspto.gov
571-272-7822

Paper 37
Entered: May 16, 2025

UNITED STATES PATENT AND TRADEMARK OFFICE

BEFORE THE PATENT TRIAL AND APPEAL BOARD

INERGY TECHOLOGY, INC.,
Petitioner,

v.

FORCE MOS TECHNOLOGY CO., LTD.,
Patent Owner.

IPR2024-00094
Patent 7,812,409 B2

Before GRACE KARAFFA OBERMANN, CHRISTOPHER L. OGDEN, and MARY C. HOFFMAN, *Administrative Patent Judges*.

HOFFMAN, *Administrative Patent Judge*.

JUDGMENT
Final Written Decision
Determining Some Challenged Claims Unpatentable
35 U.S.C. § 318(a)

I. INTRODUCTION

A. BACKGROUND

Inergy Technology, Inc. ("Petitioner") filed a Petition (Paper 1, "Pet.") requesting *inter partes* review of claims 1–6 of U.S. Patent No. 7,812,409 B2 (Ex. 1001, "the '409 patent"). Force MOS Technology Co., Ltd. ("Patent Owner") filed a Preliminary Response (Paper 6, "Prelim. Resp."). Applying the standard set forth in 35 U.S.C. § 314(a), we instituted an *inter partes* review as to all claims and grounds set forth in the Petition. Paper 9 ("Inst. Dec.").

After institution, Patent Owner filed a Patent Owner Response (Paper 24, "PO Resp."), Petitioner filed a Reply (Paper 26, "Pet. Reply"), and Patent Owner filed a Sur-reply (Paper 27, "PO Sur-reply"). We held an oral hearing on February 21, 2025, and the transcript is of record. Paper 36 ("Tr.").

We have jurisdiction pursuant to 35 U.S.C. § 6. This Decision is a Final Written Decision under 35 U.S.C. § 318(a) and 37 C.F.R. § 42.73 as to the patentability of the challenged claims. Petitioner bears the burden of proving unpatentability of the challenged claims. *Dynamic Drinkware, LLC v. Nat'l Graphics, Inc.*, 800 F.3d 1375, 1378 (Fed. Cir. 2015). To prevail, Petitioner must prove unpatentability by a preponderance of the evidence. *See* 35 U.S.C. § 316(e) (2018); 37 C.F.R. § 42.1(d) (2021). Having reviewed the arguments and the supporting evidence, we determine Petitioner has shown, by a preponderance of the evidence, that claims 1 and 3–5 are unpatentable, but Petitioner has not shown that claims 2 and 6 are unpatentable.

B. Real Parties in interest

Petitioner identifies itself, Inergy Technology, Inc., as well as ASUSTek Computer, Inc. ("ASUS") and Panjit International Inc. as real parties in interest. Pet. 1. Patent Owner identifies itself, Force MOS Technology Co., Ltd., as a real party in interest. Paper 5, 2.

C. Related Proceedings

Inter partes review IPR2024-00093 ("IPR93") challenges U.S. Patent No. 7,629,634 B2 and involves the same parties. The parties also identify *Force MOS Technology Co. Ltd. v. ASUSTek Computer, Inc.*, No. 2:22-cv-00460 (E.D. Tex.) ("parallel proceeding") as challenging the '409 patent in federal district court. Pet. 1; Paper 5, 2. Final arguments were presented in a hearing consolidated with IPR093, although the proceedings are not consolidated or joined. *See* Tr. 1 (caption).

II. BACKGROUND

A. The '409 Patent (Ex. 1001)

The '409 patent describes a "semiconductor power device that includes a trenched gate disposed in an extended continuous trench surrounding a plurality of transistor cells," wherein the trenched gate surrounds the transistor cells "as closed cells having truncated corners or rounded corners." Ex. 1001, code (57). "[T]he semiconductor power device further includes a contact dopant region . . . having [a] substantially circular shape to achieve a uniform space between the contact dopant region and the trenched gate surrounding the closed cells." *Id.*

According to the ’409 patent, conventional semiconductor power devices included a “non-uniform” space between the trenched gate and the contact, as seen in Figure 1A below. Ex. 1001, 1:49–50.

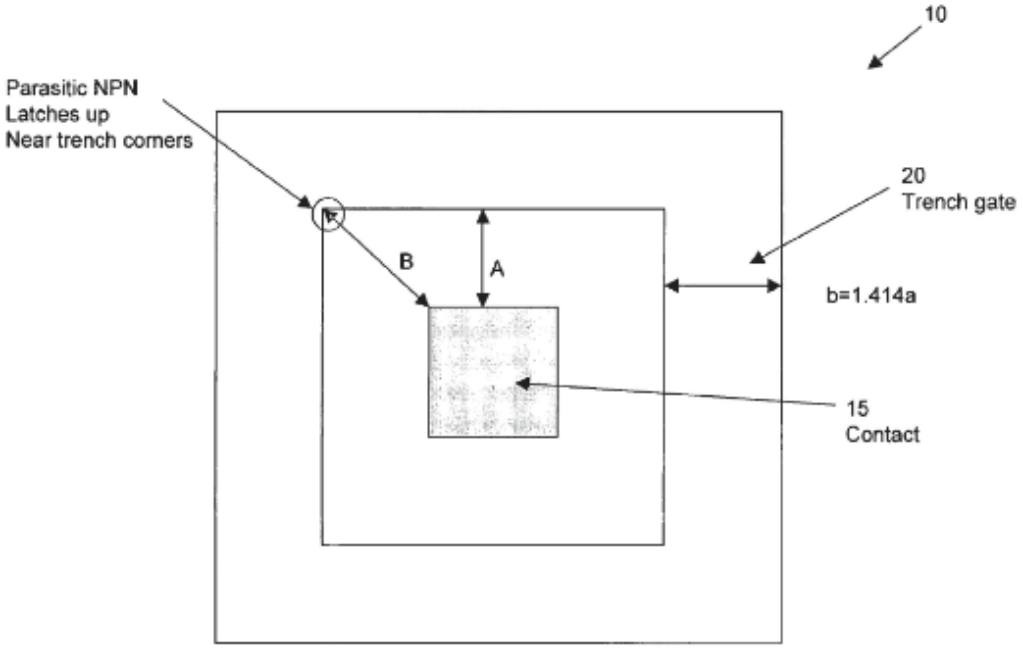

Fig. 1A (Prior Art)

Figure 1A above illustrates closed cell unit 10 of a prior art semiconductor power device, including trenched gate 20 forming a square surrounding square-shaped metal contact 15. Ex. 1001, 1:20–30. As seen in the figure, Distance B, from a corner of contact 15 to the nearest interior corner of trenched gate 20, is 1.414 times greater than Distance A between contact 15 and the interior of trenched gate 20 at their peripheral sides. *Id.* at 1:28–38. According to the ’409 patent, the non-uniform space between trenched gate 20 and metal contact 15 results in weak points at the four trenched gate corners. *Id.* at 1:48–53. This results in low avalanche current and reduced device ruggedness due to parasitic NPN latch up near the corners. *Id.*; *id.* at 1:18–19.

To remedy this, the ’409 patent describes a semiconductor power device having a “more uniform” space in the closed cell between the trenched gate and contact, as seen in Figure 3 below. Ex. 1001, 2:3–7.

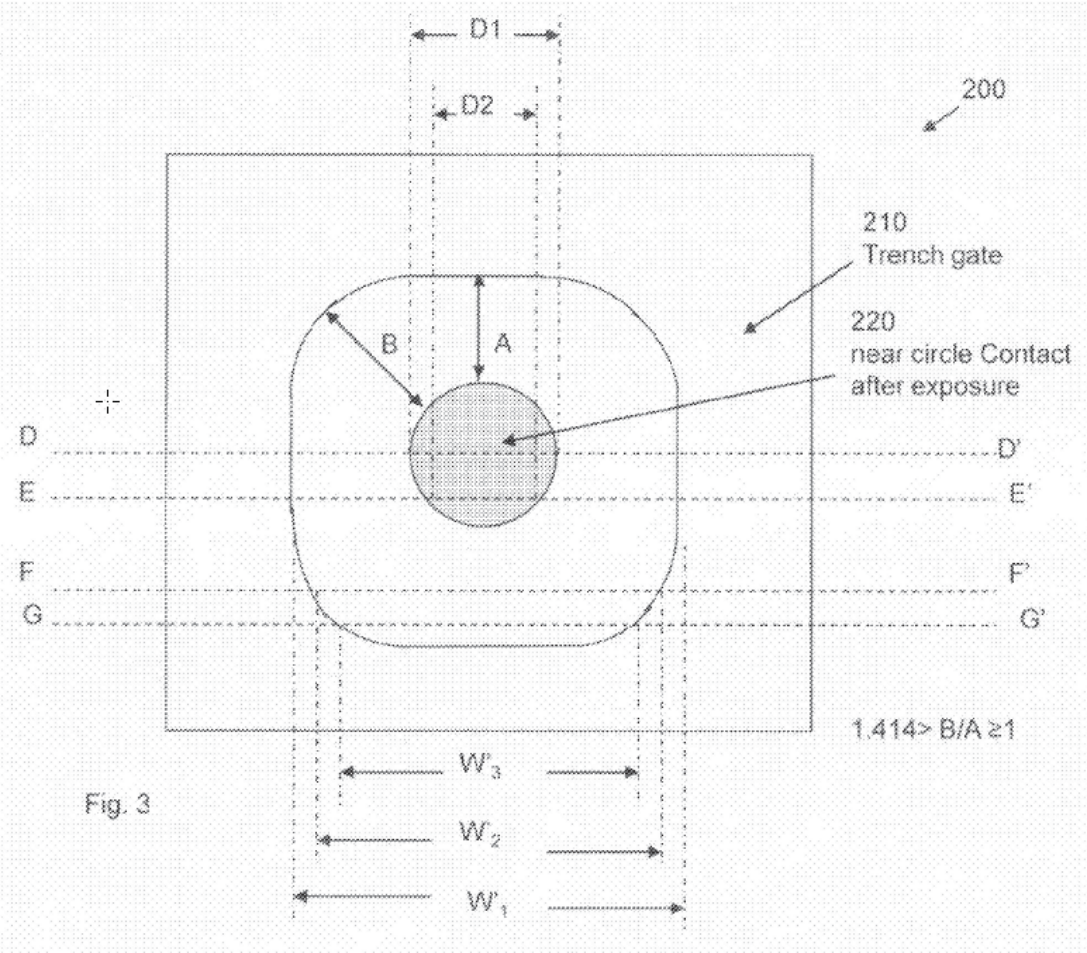

Figure 3 above illustrates closed cell unit 200 of a MOSFET[1] device, including trenched gate 210 surrounding doped contact region 220 and a metal contact being disposed above doped contact region 220. Ex. 1001, 4:3–7. Trenched gate 210 includes rounded or truncated trench corners forming a substantially square-shaped cell, and region 220 is substantially

[1] “MOSFET” refers to “Metal Oxide Semiconductor Field Effect Transistor.” *See, e.g.*, Ex. 1005, 1:7–8.

circular shaped. *Id.* at 1:48–53, 4:7–9, 4:37–39. Due to the geometries of trenched gate 210 and doped contact region 220, the distance from trenched gate 210 to doped contact region 220, including Distances A and B, is more uniform, i.e., "the ratio of B/A is substantially kept near 1.0 and certainly smaller than 1.414." *Id.* at 4:9–15. This improved uniformity eliminates the weak spots at the trenched gate corners to enhance device ruggedness. *Id.* at 4:15–17, 3:24–27.

As seen in Figure 3A below, doped contact region 220 (also referred to as the circular trench contact) includes a hole. Ex. 1001, clm. 1. The hole has a diameter smaller than 1.0 micrometer (μm) and is filled with the metal contact (also referred to as the contact metal plug). Ex. 1001, clms. 1, 5.

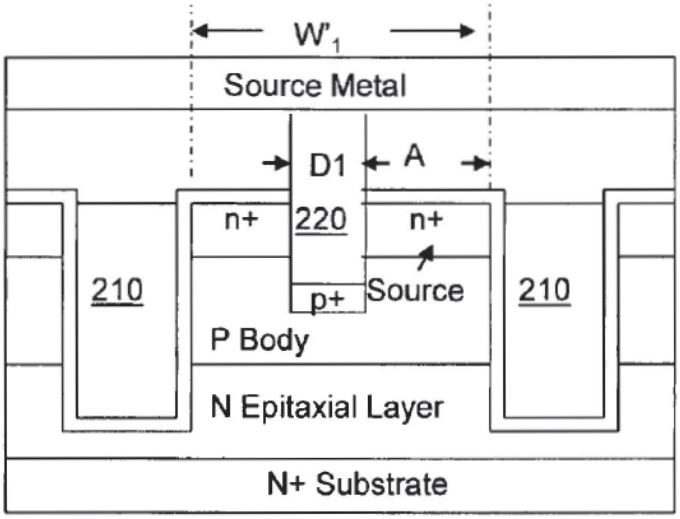

Fig. 3A (D-D' Cross Section)

Figure 3A is a cross-sectional view of the MOSFET's unit cell along line D–D' of Figure 3. Ex. 1001, 4:17–20. Notably, the metal contact plug (at 220) is connected to a source metal disposed on top of the circular trench contact. *Id.*, clm. 1, Fig. 3. The source metal comprises "a layer composed of aluminum alloys including alloys of AlCu or AlSiCu." *Id.*, clm. 4. The

metal contact plug is made of titanium, titanium nitride, and tungsten ("Ti/TiN/W") and contacts a source metal layer "composed of Ti/AlCu or Ti/AlSiCu alloys." *Id.*, clms. 3, 6. Although not illustrated in Figure 3A, a contact resistance reduction metal layer of titanium ("Ti") is disposed above a top surface of the contact metal plug and below a bottom surface of the source metal. *Id.*, clm. 2.

B. CHALLENGED CLAIMS

The Petition challenges all claims, claims 1–6, of the '409 patent. Pet. 3–4.

Claim 1, one of the two independent claims of the '409 patent, reads as follows:

> 1. A trenched semiconductor power device comprising a plurality of trenched gates surrounding a plurality of transistor cells formed in a semiconductor substrate, wherein:
>
> said trenched gates surrounding said transistor cells as closed cells constituting substantially square-shaped cells with rounded corners;
>
> each of said closed cells further includes a circular trench contact disposed substantially in a central portion of said closed cells, penetrating through a source region surrounding said trenched gates and extending into a body region encompassing said source region;
>
> said circular trench contact comprises a hole opened from a top surface of said semiconductor substrate and is filled with a contact metal plug wherein sidewalls of said hole are surrounded by and in contact said source and body regions and said circular trench contact is separate from said trenched gates with said source region and body region disposed between a gate oxide lining of said trenched gates and all circumferential points of the circular trench contact; and
>
> said contact metal plug connected to a source metal disposed on top of said circular trench contact.

Ex. 1001, 5:7–28.

Claims 2–5 depend directly from claim 1. Ex. 1001, 5:29–6:11. Claim 2 further recites a titanium layer above a top surface of the contact metal plug and below a bottom surface of the source metal. *Id.* Claim 3 further limits the material used for the contact metal plug. *Id.* Claim 4 further recites that the source metal is composed of an aluminum alloy layer. *Id.* Claim 5 further limits the circular trench contact to have a top surface diameter smaller than 1.0 μm. *Id.*

Independent claim 6 recites similar subject matter as claims 1–5 but recites "truncated" corners instead of rounded corners. Ex. 1001, 6:12–6:38. Claim 6 also recites "said metal plug contacting a source metal disposed on top of said metal plug wherein said source metal layer composed of Ti/AlCu or Ti/AlSiCu alloys." *Id.*

C. ASSERTED GROUNDS OF UNPATENTABILITY

The below table summarizes the grounds advanced in the Petition:

Ground	Claim(s) Challenged	35 U.S.C. §	Reference(s)/Basis
1	1, 3–5	102(b)[2]	Kobayashi[3]
2	2, 6	103(a)	Kobayashi, Kikkawa[4]
3	5	103(a)	Kobayashi
4[5]	1, 3–5	103(a)	Kobayashi, Hshieh[6]
5	2, 6	103(a)	Kobayashi, Hshieh, Kikkawa

Pet. 3–4.

Petitioner supports its arguments with a declaration of Dr. David Kuan-Yu Liu (Ex. 1003) and a declaration of Dr. Sylvia D. Hall-Ellis (Ex. 1008). Patent Owner supports its arguments with a declaration of Dr. Dean Neikirk (Ex. 2021). Additionally, the record includes the deposition transcripts of Dr. Liu (Ex. 2024), Dr. Hall-Ellis (Ex. 2023), and Dr. Neikirk (Ex. 1020).

---

[2] 35 U.S.C. §§ 102, 103 (2006), *amended by* Leahy-Smith America Invents Act ("AIA"), Pub. L. No. 112–29 §§ 102, 103, sec. (n)(1), 125 Stat. 284, 287, 293 (2011) (effective Mar. 16, 2013). The pre-AIA versions of §§ 102, 103 apply because the '409 patent issued from a U.S. application filed on December 4, 2006, which is before the effective date of the AIA amendments. *See* Ex. 1001, code (22).

[3] Kobayashi, US 6,888,196 B2, issued May 3, 2005. Ex. 1005.

[4] Kikkawa et al., *A Quarter-Micrometer Interconnection Technology Using a TiN/Al–Si–Cu/TiN/Al–Si–Cu/TiN/Ti Multilayer Structure*, IEEE Transactions on Electron Devices, Vol. 40, No. 2, February 1993. Ex. 1007.

[5] Petitioner included six grounds, but for efficiency, we incorporate the sixth ground into Ground 4. Both Grounds challenge claim 5 as obvious over Kobayashi and Hshieh.

[6] Hshieh et al., US 5,763,914, issued June 9, 1998. Ex. 1006 ("Hshieh").

III. ANALYSIS

A. LEVEL OF ORDINARY SKILL IN THE ART

The level of ordinary skill in the art at the time of the invention is a factual determination that provides a primary guarantee of objectivity in an obviousness analysis. *Al-Site Corp. v. VSI Int'l Inc.*, 174 F.3d 1308, 1324 (Fed. Cir. 1999) (citing *Graham v. John Deere Co.*, 383 U.S. 1, 17–18 (1966); *Ryko Mfg. Co. v. Nu-Star, Inc.*, 950 F.2d 714, 718 (Fed. Cir. 1991)).

Petitioner asserts that a person of ordinary skill in the art ("POSITA"), "at the filing date of the '409 [p]atent[,] would have a master's degree in electrical engineering, and at least two years of relevant work experience in the field of integrated circuit design and manufacturing." Pet. 13 (citing Ex. 1003 ¶ 52). Patent Owner does not dispute Petitioner's proffered level of ordinary skill in the art. PO Resp. 9 (citing Ex. 2021 ¶ 55).

We adopt Petitioner's proffered level of ordinary skill in the art, which is supported by unopposed declaration testimony and consistent with the '409 patent and prior art of record. *See, e.g.,* Ex. 1001, 1:6–3:8 (describing the invention and related art in terms of integrated circuit design and fabrication). Neither party, moreover, indicates the overall result would change based on a different definition.

B. CLAIM CONSTRUCTION

In an *inter partes* review, the Board construes the terms of a patent claim "in accordance with the ordinary and customary meaning of such claim as understood by one of ordinary skill in the art and the prosecution history pertaining to the patent." 37 C.F.R. § 42.100(b). Under that standard, claim terms generally are given their plain and ordinary meaning as would have been understood by the ordinarily skilled artisan at the time of

the invention and within the context of the entire patent disclosure. *See Phillips v. AWH Corp.*, 415 F.3d 1303, 1313 (Fed. Cir. 2005) (en banc).

1. "substantially square-shaped cells with rounded corners"

Claim 1 recites "said trenched gates surrounding said transistor cells as closed cells constituting substantially square-shaped cells with rounded corners." Ex. 1001, 5:10–12.

Petitioner does not provide an express construction for "substantially square-shaped cells." *See* Pet. 14–19. However, Petitioner argues that the term "rounded corners" is properly construed as "corners that are truncated by design layout and then rounded." *Id.* at 15 (citing Ex. 1003 ¶ 55; Ex. 1001, 2:10–20, 4:53–64). Petitioner argues that the claim language cannot include a cell designed to be square but having rounded corners as a natural or incidental result of photolithography. *Id.* at 16–18. According to Petitioner, this is because (1) "[i]t is well known in the art" that corners, such as those illustrated in Figure 1A (Prior Art) of the '409 patent, become rounded as an incidental result of lithography (*id.* at 16 (citing Ex. 1003 ¶ 56)), and because (2) the claims were amended during prosecution to distinguish over prior art reference Pfirsch[7], which shows square corners allegedly incidentally rounded by lithography (*id.* at 17–19 (citing Ex. 1002, 302)).

Patent Owner disputes Petitioner's proposed construction as improperly limiting apparatus claims to products made by a particular process of manufacture (i.e., truncated by design layout and then rounded). PO Resp. 10–13. Patent Owner also disputes Petitioner's characterization of

[7] Pfirsch et al., US 6,541,818, issued April 1, 2003. Ex. 1011.

the prosecution history. *Id.* at 13 (citing Ex. 1002, 302). Specifically, Patent Owner argues that the claims were amended to add a feature (i.e., a circular trench contact hole) missing from Pfirsch, not to distinguish the claimed rounded corners over Pfirsch's rounded corners. *Id.* (citing Ex. 1002, 295, 302).

Based on the arguments and evidence, we disagree with Petitioner's proposed construction requiring the corners to be rounded via a particular process, because doing so would improperly import a process of manufacture from the Specification into apparatus claims. *See Cont'l Circuits LLC v. Intel Corp.*, 915 F.3d 788, 799 (Fed. Cir. 2019) (explaining that, generally, a novel product that meets the criteria of patentability is not limited to the process by which it was made, however, process steps can be treated as part of a product claim if the patentee has made clear that the process steps are an essential part of the claimed invention).

Here, the portions of the Specification relied on by Petitioner (Ex. 1001, 2:10–20, 4:53–64) disclose a process for manufacturing but do not make clear that the process is an essential part of the claimed invention. We also disagree with Petitioner's assessment of the prosecution history, i.e., that the claims were amended to distinguish the claimed rounded corners from Pfirsch's rounded corners, which, presumably, are formed as an incidental result of lithography.

On the contrary, the Examiner found (and Patent Owner acknowledged) that Pfirsch has rounded corners. Ex. 1002, 276, 295, 302. As Patent Owner correctly points out, the claims were amended during prosecution to include a "circular" contact to distinguish over Pfirsch's square contact. *See id*. Petitioner does not otherwise point to evidence that

Patent Owner clearly and unmistakably limited the claim scope to rounded corners formed by a particular process.

Patent Owner argues that the term "substantially square-shaped cells with rounded corners" "should receive its plain and ordinary meaning, i.e.: the cells have, from the top view perspective, largely or essentially the shape of a square (a shape that has four equal sides and four right angles) with all corners rounded (i.e. having a curved shape like a portion of a circle or oval)." PO Resp. 10; *see also id.* at 10–22 (citing e.g., Ex. 1001, Figs. 2, 3, 1:18–57, 66–2:7, 2:10–20, 58–60, 3:12–17, 32–45, 55–4:20, 4:33–62; Ex. 1002, 302; Ex. 2007, 5–7). Ex. 2021 ¶¶ 82–96. We understand Patent Owner's proposed claim construction to require squares each having four rounded corners, when considered from a top view perspective.

Petitioner, for its part, argues in the Reply that it "agrees with the Board's preliminary conclusion" as stated in the Institution Decision "that there is no need to interpret 'rounded corners' or 'truncated corners'" because the challenges succeed under "all of the proposed constructions," including "the plain and ordinary meaning of these terms." Reply 2.

Having considered the parties positions, we see no reason to determine that "substantially square-shaped cells with rounded corners" deviates from its ordinary and customary meaning. Thus, as discussed above, we determine that the term does not include any process limitations. For purposes of this Decision, it is not necessary to resolve whether the ordinary and customary meaning of this phrase requires, as argued by Patent Owner, "all" corners rounded "from the top view perspective," because, as discussed below, we determine that the combination of Kobayashi and

Hshieh teaches rounding all corners from the top view perspective. *See infra* Section III.E.2.

Apart from our discussion above, no other claim construction analysis is necessary for our decision. *See Nidec Motor Corp. v. Zhongshan Broad Ocean Motor Co.*, 868 F.3d 1013, 1017 (Fed. Cir. 2017) (holding that only terms in controversy must be construed "and only to the extent necessary to resolve the controversy") (citing *Vivid Techs., Inc. v. Am. Sci. & Eng'g, Inc.*, 200 F.3d 795, 803 (Fed. Cir. 1999)).

2. "substantially square-shaped cells with truncated corners"

Claim 6 recites "said trenched gates surrounding said transistor cells as closed cells constituting substantially square-shaped cells with truncated corners." Ex. 1001, 6:14–16.

Petitioner and Patent Owner make similar claim construction arguments as those discussed above. Pet. 18–19; PO Resp. 19–22.

Petitioner argues that "truncated corners" is properly construed as "corners that are truncated by design layout." Pet. 18–19. Patent Owner argues that "substantially square-shaped cells with truncated corners" is properly construed as "the cells have, from the top view perspective, largely or essentially the shape of a square (a shape that has four equal sides and four right angles) with all corners truncated (i.e. being cut off)." PO Resp. 19–20. But again, in the Reply, Petitioner submits that no express construction is required because the challenges would be successful under any of the proposed constructions, including the plain and ordinary meaning. Reply 2.

For reasons similar to those discussed above, we do not adopt either of the parties' proposed claim constructions. We see no reason to determine

that the term "substantially square-shaped cells with truncated corners" deviates from its ordinary and customary meaning, which does not include any process limitations. However, we decline to determine whether the ordinary and customary meaning requires all corners to be truncated from the top view perspective, since the combination of Kobayashi and Hshieh teaches rounding all corners from the top view perspective.

C. OVERVIEW OF ASSERTED PRIOR ART

1. Kobayashi (Ex. 1005)

Kobayashi describes a MOSFET, and more specifically, a UMOSFET. Ex. 1005, 1:7–10. The UMOSFET includes a unit cell formed in a region of semiconductor layer surrounded by U-shaped trenches, the unit cell having a central contact hole. *Id.* at 6:25–37. According to the Kobayashi, the MOSFET can have several layouts, including having square-shaped unit cells with square-shaped contact holes, as seen in Figure 3A below. *Id.*

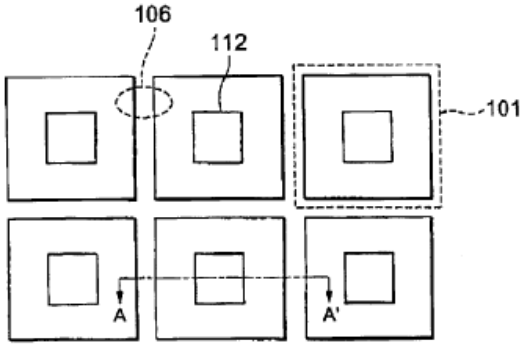

FIG.3A

Kobayashi Figure 3A depicts trench 106 surrounding a square-shaped unit cell 101. Ex. 1005, 6:25–37. Figure 3A also depicts square contact hole 112, however, Kobayashi states that "contact holes may have any desired shape," including "a circular shape." *Id.* at 6:37–39. Figure 4A, below,

shows an alternative layout with hexagonal-shaped unit cells with circular contact holes.

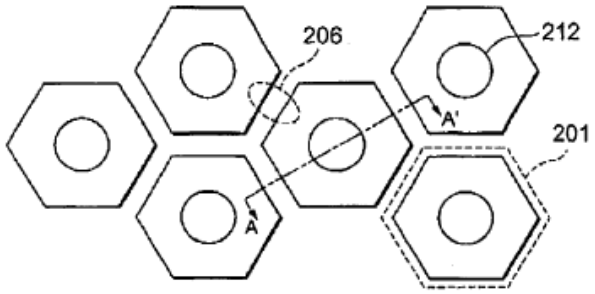

FIG.4A

Kobayashi Figure 4A depicts trench 206 surrounding a hexagonal-shaped unit cell 201. Ex. 1005, 6:32–34. Figure 4A also depicts circular contact hole 212. *Id.* at 6:37–39.

Kobayashi further describes rounded corners at the bottom of trenches, as seen from the side view perspective in Figure 6C below.

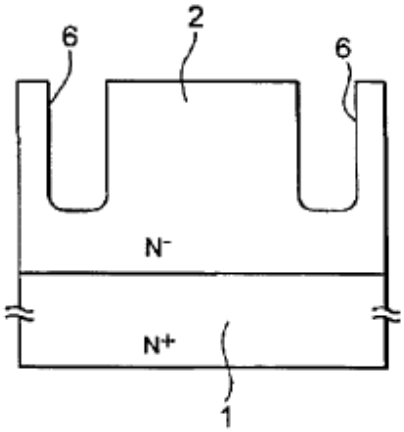

FIG.6C

Above Figure 6C depicts N^+-type silicone substrate layer 1 beneath N^--type epitaxial layer 2. Within layer 2, trench 6 is formed with rounded trench corners at a bottom portion of trench 6. Ex. 1005, 7:57–59. Kobayashi further describes a non-illustrated embodiment in which the

"corners of each trench 6 at an opening portion may also be rounded." *Id.* at 7:59–60. Kobayashi explains that the bottom and opening portion corners can be rounded via etching or hydrogen annealing. *Id.* at 7:60–8:4.

Figure 5A, reproduced below, illustrates several other features described in Kobayashi.

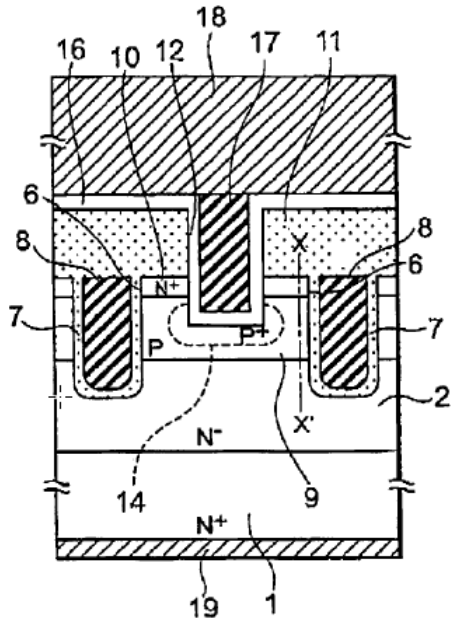

FIG.5A

In Figure 5A, trench 6, located above layer 1 and within layer 2, is filled with gate oxide film 7 and polysilicon trench gate 8. Ex. 1005, 6:53–57. Interlayer oxide film 11 is formed on trench gate 8. *Id.* Barrier metal 16, made of titanium ("Ti") and titanium nitride ("TiN"), extends over interlayer oxide film 11 and into contact hole 12. *Id.* at 6:58–66; 9:30–32. Contact hole 12 extends to P-type base layer 9 through N^+-type source layer 10 and is filled with tungsten metal plug 17. *Id.* Barrier metal 16 and plug 17 are in contact with source electrode 18. *Id.* Drain electrode 19 is formed below layer 1. *Id.*

2. Hshieh (Ex. 1006)

Hshieh describes a power transistor cell supported on a semiconductor substrate with improved MOSFET cell topography. Ex. 1006, code (57), 2:60. Specifically, the power transistor cell implements a non-orthogonal parallelogram cell topography, which increases cell packing density because a non-orthogonal parallelogram cell occupies less total area than a square cell. *Id.* at 5:10–17. Figure 7A below illustrates an embodiment with non-orthogonal parallelogram transistor cells.

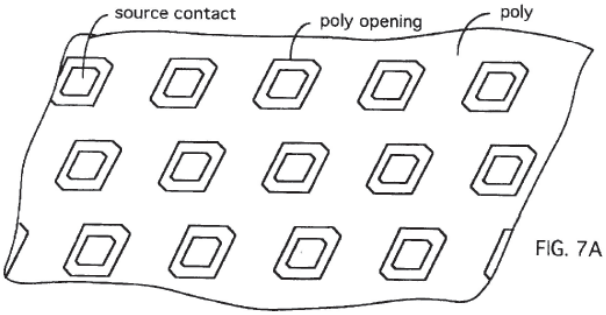

Hshieh Figure 7A depicts cells, each cell constituting a polysilicon opening of non-orthogonal parallelogram shape and a central source contact, wherein the cells are separated by a polysilicon gate layer. Ex. 1006, 3:30–38. The two sharper corners of the parallelogram-shaped cells are blunted "to prevent the corner vulnerability where punch through weak points may be formed at the sharp corners due to a three-dimension diffusion effect." *Id.* at 5:3–6 (citing Yilmaz et al.[8]). In a similar embodiment, all four corners may be blunted or rounded, as in Figure 8A, reproduced below. *Id.* at 5:23–25.

[8] Yilmaz et al., US 5,304,831, issued April 19, 1994. Ex. 2012.

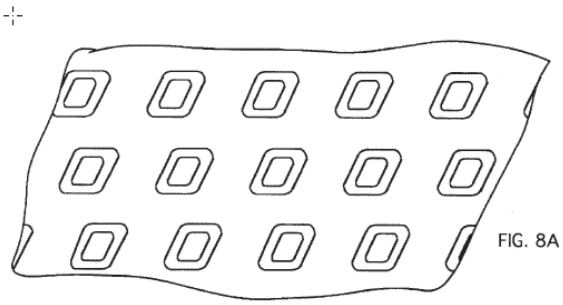

Hshieh Figure 8A, above, depicts all four corners of the non-orthogonal parallelogram-shaped cells and the source contacts being blunted or rounded. Ex. 1006, 5:23–25. Hshieh further describes a similar embodiment, as seen in Figures 10A and 10B below, having trenches and trenched gates.

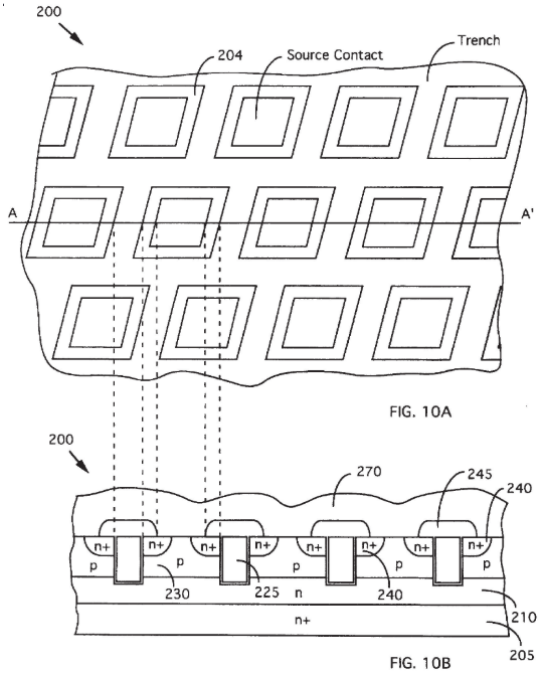

Hshieh Figure 10A, above, depicts MOSFET device 200 with an array of non-orthogonal parallelogram-shaped cells 204 surrounded by a trench. Ex. 1006, 7:26–8:5. Cells 204 may have rounded corners. *Id.* at 12:32–36 (clm. 37). Figure 10B, above, shows a cross-sectional view of device 200, illustrating N^+ substrate layer 205, N^- epitaxial layer 210, doped body region

230, doped source region 240, source contact 270 (which extends to regions 230 and 240 except at layer 245), and trenched gate 225. *Id.* at 7:26–8:5.

3. Kikkawa (Ex. 1007)

Kikkawa describes a multilayered conductor structure for DRAM interconnections. Ex. 1007, 3. A barrier metal bilayer of titanium ("Ti") and titanium nitride ("TiN") is deposited onto an oxidized silicon substrate, followed by layers of aluminum-silicon-copper ("AlSiCu"), TiN, AlSiCu, and TiN, as seen below in Figure 1c. *Id.* at 4.

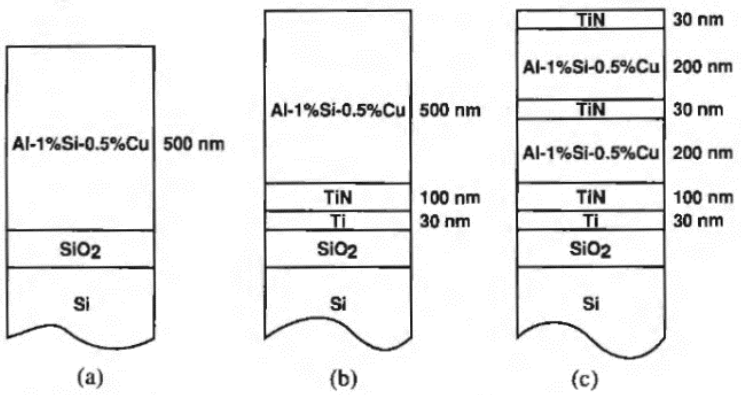

Fig. 1. Cross-sectional diagrams of (a) Al–Si–Cu single layer, (b) Al–Si–Cu on TiN/Ti barrier layer, and (c) TiN/Al–Si–Cu/TiN/Al–Si–Cu alternated layers on TiN/Ti barrier layer.

Figure 1 illustrates cross-sectional diagrams of three different structures layered on a silicon substrate: (a) an AlSiCu single layer, (b) an AlSiCu single layer on a TiN/Ti barrier layer, and (c) TiN/AlSiCu/TiN/AlSiC multilayers on a TiN/Ti barrier layer. According to Kikkawa, the TiN/AlSiCu/TiN/AlSiC/TiN/Ti multilayer structure illustrated in Figure 1(c) displays high electrical and mechanical endurance in comparison to the structures in Figures 1(a) and 1(b). Ex. 1007, 8.

In Figure1(c), the bottom TiN/Ti bilayer acts as a diffusion barrier between the AlSiCu and the silicon substrate. Ex. 1007, 4. The thin Ti layer reduces the contact resistance between the TiN and silicon substrate by

forming a titanium silicide layer at the interface. *Id.* Figure 1(c) also illustrates that the AlSiCu layer is divided into two layers to prevent void propagation through the AlSiCu layer, and a TiN thin film is used as an intermediate layer. *Id.* The TiN intermediate layer reinforces the mechanical strength of the AlSiCu film and is less thermally reactive than pure transition metals including Ti. *Id.* Additionally, the top TiN layer acts as an antireflection coating layer for ultraviolet photolithography and a buffer layer. *Id.*

D. LEGAL PRINCIPLES

A claim is unpatentable under § 103(a) if the differences between the claimed subject matter and the prior art are "such that the subject matter as a whole would have been obvious at the time the invention was made to a person having ordinary skill in the art to which said subject matter pertains." *KSR Int'l Co. v. Teleflex Inc.*, 550 U.S. 398, 406 (2007) ("*KSR*"). When a ground in a petition is based on a combination of references, we consider "whether there was an apparent reason to combine the known elements in the fashion claimed by the patent at issue." *Id.* at 418 (citing *In re Kahn*, 441 F.3d 977, 988 (Fed. Cir. 2006)). We base our obviousness inquiry on factual considerations (the so-called *Graham* factors) including (1) the scope and content of the prior art, (2) any differences between the claimed subject matter and the prior art, (3) the level of skill in the art, and (4) any objective indicia of obviousness or non-obviousness that may be in evidence. *See Graham*, 383 U.S. at 17–18.

The obviousness analysis typically concerns "whether there was an apparent reason to combine the known elements in the fashion claimed by the patent at issue." *KSR*, 550 U.S. at 418 (citing *In re Kahn*, 441 F.3d 977,

988 (Fed. Cir. 2006) (requiring a fact-finder to provide "articulated reasoning with some rational underpinning to support the legal conclusion of obviousness")).

E. GROUND 4: OBVIOUS OVER KOBAYASHI AND HSHIEH

Under Ground 4, Petitioner contends that claims 1 and 3–5 are unpatentable under § 103(a) as obvious over Kobayashi in view of Hshieh. Pet. 51–63.

We begin our analysis with independent claim 1. We determine that Petitioner has shown, by a preponderance of the evidence, that claim 1 is unpatentable as obvious over Kobayashi and Hshieh, for the reasons explained below.

1. Claim 1 Preamble

The preamble of claim 1 recites "[a] trenched semiconductor power device comprising a plurality of trenched gates surrounding a plurality of transistor cells formed in a semiconductor substrate, wherein" the device comprises certain features. Ex. 1001, 5:7–9.

Petitioner argues that Kobayashi discloses the preamble because it describes a trenched semiconductor power device comprising a plurality of trenched gates surrounding a plurality of transistor cells formed in a semiconductor substrate. Pet. 22–25, 51 (citing Ex. 1005, 4:12–19, 6:29–37, 6:51–56, Figs. 4A, 5A).

Patent Owner does not specifically contest this. *See generally* PO Resp. We need not decide whether the preamble is limiting because we are persuaded that Kobayashi discloses the preamble of claim 1, for the reasons given by Petitioner.

2. Limitation 1[a]

(a) Petitioner's Contentions

Limitation 1[a] recites "said trenched gates surrounding said transistor cells as closed cells constituting substantially square-shaped cells with rounded corners." Petitioner argues that limitation 1[a] is taught by the combination of Kobayashi and Hshieh. Pet. 52.

In Kobayashi, Petitioner identifies trench gates surrounding transistor cells as closed cells constituting substantially square-shaped cells. Pet. 52 (citing Ex. 1005, 6:26–27, Fig. 3A). Petitioner's annotated version of Kobayashi's Figure 3A is provided below.

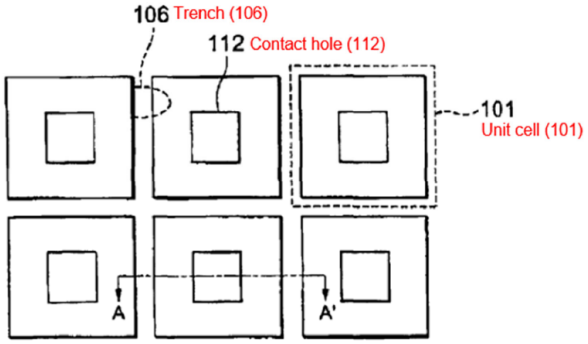

Kobayashi, Figure 3A (annotated)

Petitioner's annotated Figure 3A of Kobayashi identifies, from a top view perspective, square-shaped unit cell 101, trench 106 (which surrounds unit cell 101), and contact hole 112.[9]

Petitioner further identifies rounded corners at trench opening portions forming the closed cell. Pet. 53 (citing Ex. 1005, 7:57–8:4, Fig. 6C;

[9] Under Ground 4, Petitioner alternatively contends that Kobayashi's hexagonal cells, illustrated in Figure 4A, are "substantially square cells with truncated corners." Pet. 52 (citing Ex. 1005, 6:30; Ex. 1003 ¶ 119). In this Decision, we focus on Petitioner's reliance on Kobayashi's square cells, illustrated in Figure 3A.

Ex. 1003 ¶ 120). Petitioner's annotated version of Kobayashi Figure 6C, pointing out the location of the rounded corners, is reproduced below. *Id.*

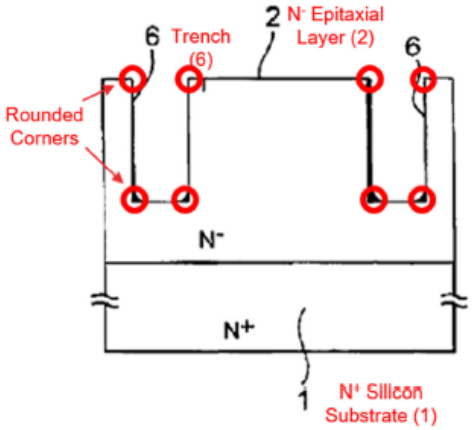

Kobayashi, Figure 6C (annotated)

Petitioner's above annotated version of Kobayashi Figure 6C shows a side view of trench 6 with corners rounded at bottom and opening portions, at the positions indicted by the circle annotations. Pet. 53. According to Petitioner's declarant, Dr. Liu, Kobayashi's rounding leads to "higher breakdown voltage and lower leakage current—the same benefits discussed in the '409 Patent." Ex. 1003 ¶ 133. Petitioner further contends that all corners at the opening portions would be rounded and that the rounding would be would be visible from the top plan view. Pet. Reply 13–14; Tr. 64.

Alternatively, Petitioner identifies rounded corners in Hshieh from a top perspective, as seen below in Petitioner's annotated versions of Figures 6A–7A. Pet. 54 (citing Ex. 1006, 5:3–28; Ex. 1003 ¶ 121); *id.* at 59 (citing Figs. 6A–8B).

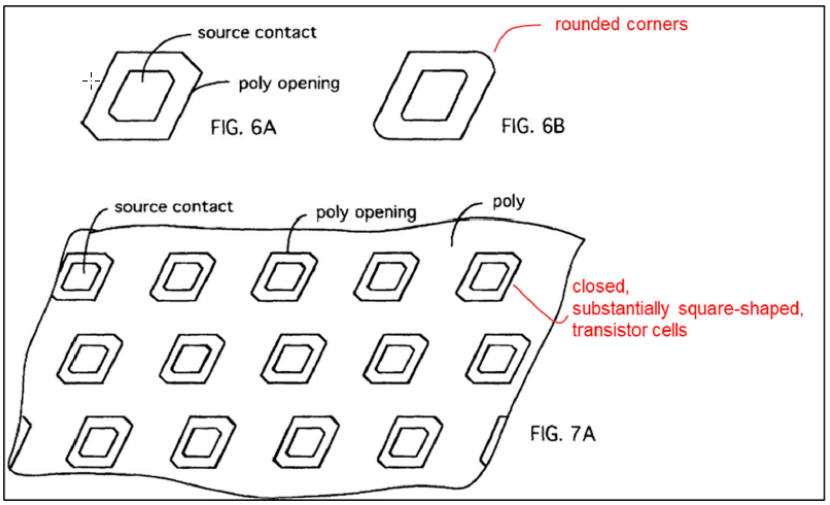

Petitioner annotates Hshieh's Figures 6A–7A with the descriptions "closed, substantially square-shaped, transistor cells" and "rounded corners." As seen above, Figures 6A–7A illustrate non-orthogonal parallelogram-shaped cells, each cell having its two opposing sharper corners being rounded from the top view perspective. Petitioner also cites to Figures 8A and 8B (seen below), which illustrate similar cells having all four (two sharper and two less sharp) corners rounded from the top view perspective. Pet. 59; Ex. 1003 ¶ 137.

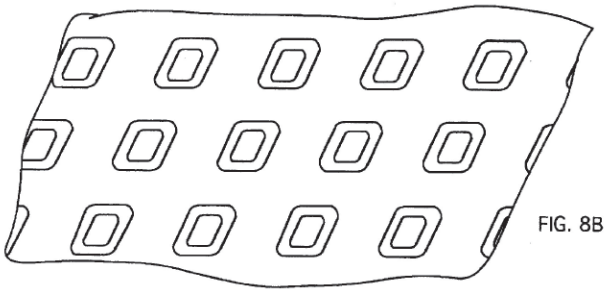

Petitioner contends it would have been obvious to modify Kobayashi's square-shaped cells with top view rounded corners as in Hshieh. Pet. 54 (citing Ex. 1003 ¶ 122). Petitioner contends that Hshieh expressly teaches the benefits of top view rounding: to address "the problems of vulnerable punch-through weak points in the corners of square

cell[s] [] due to undesirable higher peak electric field being reach at the corners." *Id.* at 57–58 (citing 1003 ¶ 133; Ex. 1006, 2:19–39); *see also id.* 59 (citing Ex. 1003 ¶ 137; Ex. 1006, 5:3–17, Figs. 6A–8B); Ex. 1003 ¶ 122.

In addition, Petitioner provides the following rationales to support its obviousness challenge: use of a known technique to improve similar devices in the same way, applying a known technique to a known device ready for improvement to yield predictable results, combining familiar elements according to known methods to yield predictable results, and known work in the field. *Id.* at 60–63 (citing Ex. 1003 ¶¶ 137–141; *KSR,* 550 U.S. at 415–418. In general, Petitioner argues that 1) corner vulnerability was a known problem, and 2) top view rounding was a known solution to the problem and within the skill of a POSITA. Pet. 56–63 (citing, e.g., Ex. 1003 ¶¶ 133, 137, 141).

As evidence that corner vulnerability was a known problem, the Petition relies on Dr. Liu's testimony that "[t]he corners of . . . square cells tend to induce higher peak electric fields, leading to a low avalanche breakdown voltage, which is undesirable." Ex. 1003 ¶¶ 133, 137. Dr. Liu points to the '409 patent's description of the prior art, which discloses that "weak points occur at the four corners that result in low avalanche current and reduced device ruggedness." *Id.* ¶¶ 133, 138; Ex. 1001, 1:48–52. Dr. Liu also points to Hshieh's disclosure of "vulnerable punch-through weak points in the corners of square cell[s]" and explains that this is due to undesirable higher peak electric field being reached at the corners. *Id.* ¶¶ 133, 137 (citing Ex. 1006, 2:19–39, 5:3–17, Figs. 6A–8B).

As evidence that top view rounding was known and within the level of ordinary skill, the Petition relies on Dr. Liu's testimony that "methods of . . .

rounding the corners (both intentionally by design and through natural rounding), are all known, conventional, familiar elements and processes to a POSITA." Ex. 1003 ¶ 137. Dr. Liu points to Hshieh's disclosure that "[i]n order to prevent the corner vulnerability where punch through weak points may be formed at the sharp corners due to a three-dimension diffusion effect . . . , the sharp corners [of the cells] can be either blunted or rounded." *Id.* ¶ 137; Ex. 1006, 5:3–8. Additionally, Dr. Liu identifies top view rounding in the Pfirsch reference cited during prosecution and testifies that it was "well known in the art that the corners [of a square shaped cell] would become rounded as a natural or incidental result photolithography" during the manufacturing process. *Id.* ¶¶ 39, 42–44, 55–57 (citing Ex. 1001, 2:10–20, 4:53–64; Ex. 1002, 302); Pet. 16–18; Ex. 1011.

In addition, Dr. Liu identifies teachings in Kim[10], cited in Kobayashi, as further evidence of using rounding to eliminate corner vulnerability. Ex. 1003 ¶¶ 37, 133. Dr. Liu explains that it was known to remove or alleviate any geometrical features that could magnify detrimental effects that lead to premature punch-through breakdown. *Id.* Dr. Liu further explains that all sharp corners of the cell (whether visible in the top view/planar direction or not) reach undesirable higher peak electric fields that lead to premature punch-through breakdown, and that removing sharp corners via rounding beneficially increases breakdown voltage. *Id.* (citing Ex. 1005, 7:57–8:4; Ex. 1012).

---

[10] Kim et al., *Trench Corner Rounding Technology Using Hydrogen Annealing for Highly Reliable Trench DMOFETS*, International Symposium on Power Semiconductor Devices and ICs (ISPSD), May 22–25, 2000, Toulouse France. Ex. 1012 ("Kim").

(b) Patent Owner's Arguments; Analysis

With respect to Petitioner's proposed modification of Kobayashi to include top view rounding, Patent Owner makes several arguments, which we address in turn, along with our analysis of the parties' arguments.

Patent Owner first argues that Petitioner erroneously relies on Kobayashi/Kim to conclude that top view rounding was "known." PO Resp. 46 (citing Pet. 59). Patent Owner argues that Petitioner's conclusion is based on flawed analysis conflating "different types" of rounding, that is, conflating side view rounding (such as in Kobayashi and Kim) with top view rounding (such as in the '409 patent and Hshieh). *Id.; see also* Tr. 83:9–24 (analogizing the differences between side view and top view rounding).

Although we agree that "side view" trench corner rounding is different than "top view" rounding of the cell, we do not agree that they are completely unrelated. The trench and side view rounded trench corners surround the cell to form the cell corners visible from the top view. Furthermore, Patent Owner focuses on Kim's teaching that side view rounding lowers gate leakage but does not address Kim's teaching of another benefit: increasing breakdown voltage. *See* PO Resp. 46; PO Sur-reply 21; Ex. 2021 ¶ 137.

Patent Owner's omission here is relevant because Kim seems to support, or at least align with, Petitioner's position that any corner will have higher peak electric fields resulting in lower breakdown voltage, and that by eliminating the corners, breakdown voltage is increased. Moreover, as Dr. Liu points out, increasing breakdown voltage is the same benefit achieved by the top view rounding in the '409 patent. Ex. 1003 ¶ 133.

That said, even assuming Patent Owner is correct that Kobayshi/Kim's side view rounding is unrelated to top view rounding, the preponderance of the evidence still indicates that top view rounding was known. We find Dr. Liu's testimony (e.g., that it was known that corner features tend to reach undesirable higher peak electric fields, and that it was known to eliminate problematic corners via top view rounding, both intentionally and incidentally via photolithography) to be credible. Ex. 1003 ¶¶ 37, 56, 133, 135, 137–141.

As Dr. Liu points out, Hshieh's Figures 6A–8B show that top view rounding was known to eliminate corners. Ex. *Id.* ¶ 137 (citing Ex. 1006). Petitioner and Patent Owner also agree that the Pfirsch reference cited during prosecution shows top view rounding. Pet. 17; Ex. 1003 ¶ 57; Ex. 2024, 26; Ex. 1002, 302; PO Resp. 13; Ex. 2021 ¶ 87; Ex. 1011. That circumstance further supports Petitioner's view that such rounding was known at the time of the invention. Indeed, Pfirsch states that corners are problematic and form areas of high electrical field causing undesirable effects, which is consistent with Dr. Liu's testimony. Ex. 1011, 1:29–41; PO Resp. 46 (citing Ex. 1011, 1:34–40).

In addition, Dr. Liu explains that, over his many years of industrial experience, he observed incidental top view rounding by photolithography during the manufacturing process, which forms another credible and persuasive basis for his opinion that top view rounding was known, and within the level of ordinary skill in the art. Ex. 2024, 20:6–22:12, 26:3–10. We further find persuasive on this point that Hshieh itself teaches that, in addition to square and hexagonal cell shapes, circular (i.e., rounded) cell

shapes were known to be conventional. Ex. 1006, 1:18–21. This provides additional objective proof that aligns with Dr. Liu's opinion testimony.

Patent Owner further argues that "the fact that a particular technique is 'known' is not sufficient for a motivation to combine." PO Resp. 47. However, the motivation-to-combine analysis is a flexible one, and the "known-technique" rationale is adequate to show a motivation to combine. For example, "if a technique has been used to improve one device, and a person of ordinary skill in the art would recognize that it would improve similar devices in the same way, using the technique is obvious unless its actual application is beyond his or her skill." *KSR*, 550 U.S. at 417; *see also Intel Corp. v. PACT XPP Schweiz AG*, 61 F.4th 1373, 1380 (Fed. Cir. 2023) (quoting *Intel Corp. v. Qualcomm Inc.*, 21 F.4th 784, 799–800 (Fed. Cir. 2021) ("If there's a known technique to address a known problem using 'prior art elements according to their established functions,' then there is a motivation to combine.").

Here, as discussed above, the record shows that top view rounding was a known technique to eliminate corners, and that corners were a known problem (e.g., corners tend to reach undesirable higher peak electric field leading to premature breakdown voltage). *See, e.g.*, Ex. 1003 ¶¶ 37, 39, 42–44, 55–57, 122, 133, 135–141; Ex. 1005, 7:57–8:4; Ex. 1006, 1:18–21, 2:19–39, 5:3–17, Figs. 6A–8B; Ex. 1011, 1:29–41; Ex. 1012; PO Resp. 13, 46 (citing Ex. 1011, 1:34–40); Ex. 2021 ¶ 87. Furthermore, there is no dispute that modifying Kobayashi to eliminate corners via top view rounding was anything more than a "minor and commonplace modification" of cell shape within the skill of an ordinary artisan, or that top view rounding would change Kobayashi's established function. Pet. 60; Ex. 2021 ¶ 86.

Patent Owner also argues that Hshieh teaches non-orthogonal parallelogram-shaped cells to increase cell packing density and "specifically identifies square cell configurations as having disadvantageous packing densities." PO Resp. 48–49. Patent Owner argues that Hshieh, therefore, expressly teaches against square-shaped cells, and that the combination would defeat the basic objective of Hshieh. *Id.* at 48–52.

We first note that, as discussed above, Petitioner does not rely solely on Hshieh's teachings for the claimed rounding. We also disagree with Patent Owner's teaching away argument. Although Hshieh teaches that non-orthogonal cells are preferable over square cells, Patent Owner has not pointed out anything in Hshieh that would "criticize, discredit, or otherwise discourage" modifying Kobayashi's square cells to have rounded corners. *In re Fulton*, 391 F.3d 1195, 1201 (Fed. Cir. 2004)*; see also DePuy Spine, Inc. v. Medtronic Sofamor Danek, Inc.*, 567 F.3d 1314, 1327 (Fed. Cir. 2009) ("A reference does not teach away . . . if it merely expresses a general preference for an alternative invention . . . .").

Patent Owner's arguments that Hshieh teaches away from using squares, or that squares would defeat Hshieh's basic objective, is wholly irrelevant because Kobayashi already discloses squares. The proposed modification seeks to modify Kobayashi's (already square) cells to have rounded corners. Thus, we find Hshieh does not teach away from the combination, nor would the modification defeat the basic objective of Hshieh. Similarly, there is no evidence to suggest that incorporating Hshieh's rounding into Kobayashi would render Kobayashi inoperable for its intended purpose.

Furthermore, to the extent Patent Owner argues that Hshieh's "rounding is intended to address the problem of the 'sharp corners' created by using non-orthogonal parallelograms," and, therefore, Hshieh's rounding is limited to non-orthogonal parallelograms (which have two sharper and two less sharp corners), we disagree. PO Resp. 49. Hshieh's rounding is not limited to the two sharper corners of a non-orthogonal parallelogram. Hshieh's Figures 7A–8B clearly illustrate non-orthogonal parallelograms having all corners (including the two less sharp corners) rounded. Ex. 1006, 5:3–28, Figs. 6A–8B; Pet. 54, 59. Patent Owner cites to no disclosure in Hshieh that limits rounding to the two sharper corners of a non-orthogonal parallelogram or to non-orthogonal parallelograms in general, or would otherwise discourage a POSITA from rounding the corners of other cell shapes including squares.

Patent Owner also alleges improper cherry-picking and hindsight analysis to arrive at the claimed configuration. PO Resp. 52. Patent Owner's argument that the square-grid, trenched gated, and circular trench source features are cherry-picked is not persuasive, however, because Kobayashi explicitly discloses that combination. *Id.* at 53–54; Ex. 1005, 6:25–39. Kobayashi describes all the features of claim 1 except, perhaps, rounded corners, and Hshieh describes a similar device with rounded corners. Ex. 1005, 6:25–39; Ex. 1006, Figs. 8A–8B.

Regarding Patent Owner's hindsight argument, as discussed above, Petitioner provides a persuasive rationale why a person of ordinary skill would have been led to modify Kobayashi with rounding: using a known technique (rounding) to address a known problem (corner vulnerability). *See* Pet. 54, 59–60 (citing Ex. 1006, 5:3–17). Patent Owner does not

contend that this was outside the level of ordinary skill in the art at the time the claimed invention was made nor that it was gleaned only from the '409 patent. We further note that "[a] person of ordinary skill is also a person of ordinary creativity, not an automaton." *KSR*, 550 U.S. at 421.

Patent Owner also argues that Hshieh's structure is fundamentally different than Kobayashi's. PO Resp. 52–53. Patent Owner argues that Hshieh's device lacks trenched gates and a trench source contact. *Id.* However, Hsieh explicitly discloses a trenched gate device (Figures 10A and 10B) having rounded corners (Figures 7A–8B and claim 37). Although Patent Owner is correct that Hshieh's source contact is not trenched, we do not agree that that this single difference renders Hshieh's device fundamentally different than Kobayashi's device. Dr. Liu persuasively explains that trenched gate non-trench source contact devices, as in Hshieh, represent an earlier version of trenched gate devices, before the technology progressed to incorporate trench source contacts, as in Kobayashi. Ex. 1003 ¶ 37; Ex. 2024, 151; Tr. 151:1–8.

Patent Owner further argues that Hshieh's rationale for rounding is inapplicable to Kobayashi, because Hshieh's rounding is related to the three dimensional diffusion phenomenon, which is not an issue in Kobayashi's trenched gate/trench source device. *See* PO Resp. 54–60; PO Sur-reply 22–24.

As an initial matter, even if we were to agree that Hshieh's rationale for rounding is inapplicable to Kobayashi, the record overall still shows that rounding was a known solution to problematic corners, as discussed above. However, we do not agree that Hshieh's teachings regarding rounding are inapplicable to Kobayashi, for the reasons set for the below.

Patent Owner argues, "Hshieh uses rounding and blunting to address the effect of the 'three dimension diffusion effect' *at the two sharper corners* of Hshieh's non-orthogonal parallelograms (emphasis added)." PO Resp. 53. Patent Owner then explains that three-dimension diffusion can lead to undesirable "excessively short [horizontal] channel length" at corners. *Id.* at 55, 58. However, because Hshieh also teaches embodiments with rounding at the less sharp corners (see Figures 7A–8B), this potentially suggests that the issue of excessively short channel length at the two sharper corners is not the sole reason one might choose to round a corner.

Patent Owner also argues that Hshieh's reason for rounding (i.e., preventing corner vulnerability caused by punch-through weak points caused by excessively short horizontal channel length due to three-dimension diffusion) is inapplicable to the structure of Kobayashi's trenched gate/trench source contact device, because Kobayashi has a vertical channel and only vertical/depth-wise boundaries. PO Resp 58. Dr. Niekirk explains,

> Because the channel length of Kobayashi's vertical channel is determined by the vertical depth of implantation and diffusion of the source layer and body region, the problem of the three dimensional diffusion phenomena . . . is irrelevant to the structure, design, or fabrication of Kobayashi [].

Ex. 2021 ¶ 150.

In comparing Kobayashi and Hsieh, Patent Owner focuses on Kobayashi's *vertical* channel device and Hsieh's (and Yilmaz's) *non*-trenched gate *horizontal* channel devices. Patent Owner does not, however, address whether Hshieh's trenched gate embodiment (Figures 10A and 10B)

has vertical or horizontal channels. *See* PO Resp. 54–60.[11] Moreover, according to Patent Owner's own reasoning, Hshieh's trenched gate device has vertical channels. Ex. 2021 ¶ 149 ("[o]ne of the defining characteristics of a trench-gate MOSFET is that the channel is in the vertical direction along the trenched gate.").

Against that backdrop, we determine that Patent Owner's characterization of Hshieh's reason for rounding (to prevent corner vulnerability by eliminating short horizontal channel lengths caused by three-dimension diffusion) appears irrelevant to Hshieh's trenched gate embodiments, which presumably have vertical channels. Patent Owner even acknowledges that "Hshieh [does not] provide any explanation how rounded corners would be beneficial for a trench gate MOSFET." Ex. 2021, fn. 4; Ex. 1006, clm. 37.

Considering that Hshieh teaches rounded corners in trenched gate vertical channel embodiments (in which three-dimension diffusion is not an issue), this suggests Hshieh's rounding to prevent corner vulnerability is not limited to corner vulnerability caused by three-dimension diffusion. Ex. 1006, clm. 37. Furthermore, Dr. Liu testifies that, although Hsieh attributed corner vulnerability to three-dimension diffusion, it was known in the art that effects other than three-dimension diffusion, such as high peak electric field at corners, also contribute to corner vulnerability. Ex. 2024, 158:20–160:15, 171:11–172:21. As discussed above, the Pfirsch reference,

[11] Patent Owner indicates that Hsieh's trenched gate embodiment has "horizontal/lateral boundaries," however, Patent Owner does not meaningfully explain how this is significant with respect to punch-through, channel length, or three-dimension diffusion. *See* PO Resp. 58.; Ex. 2021 ¶ 149.

applied during prosecution, discussed in the Petition, and cited in Patent Owner's Response, corroborates this testimony. Ex. 1011, 1:34–40; Pet. 17; PO Resp. 46.

To be clear, Pfirsch explicitly discloses rounding and corner vulnerability caused by various effects, including dopant diffusion and high electrical field strength. Ex. 1011, 1:29–41. Dr. Neikirk does not dispute that high peak electric field at corners was a known problem, nor does he argue that this problem is absent in Kobayashi, nor that eliminating corners via rounding would solve the problem. *See generally* PO Resp.; Ex. 2021. Instead, Patent Owner argues, "Dr. Liu could not articulate a reason that the three dimensional diffusion phenomenon applies to Kobayashi—instead stating that there are 'other effect[s]' contributing to punch-through. . . . But any such theories about other effects are not disclosed in the Petition, and thus are not appropriately a basis for a motivation to combine." PO Resp. 60. We disagree. As discussed above, the Petition sets forth that it was known that "undesirable higher peak electric fields" occur at corners, causing corner vulnerability, and that it was known that rounding eliminates problematic corners. Pet. 57–58; Ex. 1003 ¶¶ 37, 122, 133, 137, 141.

3. Undisputed Limitations 1[b]–1[f]

Patent Owner does not dispute Petitioner's contentions regarding limitations 1[b]–1[f], which are discussed briefly below.

Limitation 1[b] recites "each of said closed cells further includes a circular trench contact disposed substantially in a central portion of said closed cells, penetrating through a source region surrounding said trenched gates and extending into a body region encompassing said source region," which Petitioner identifies in Kobayashi as centrally disposed circular

contact hole 12 extending through source layer 10 to base layer 9. Ex. 1001, 5:13–17; Pet. 27–29, 55 (citing Ex. 1005, 6:29–39, 6:46–67, Figs. 4A, 5A).

Limitation 1[c] recites "said circular trench contact comprises a hole opened from a top surface of said semiconductor substrate and is filled with a contact metal plug." Ex. 1001, 5:18–20. Petitioner identifies Kobayashi's contact hole 12 filled with tungsten metal plug 17. Pet. 29–30, 55 (citing Ex. 1005, 6:58–67, Figs. 4A, 5A).

Limitation 1[d] recites "wherein sidewalls of said hole are surrounded by and in contact said source and body regions." Ex. 1001, 5:20–22. Petitioner identifies Kobayashi's contact hole 12 sidewalls in contact with the source and base layers. Pet. 30–31, 55 (citing Ex. 1005, Figs 4A, 5A).

Limitation 1[e] recites "and said circular trench contact is separate from said trenched gates with said source region and body region disposed between a gate oxide lining of said trenched gates and all circumferential points of the circular trench contact." Ex. 1001, 5:22–26. Petitioner identifies Kobayashi's source and base layers 10, 9 disposed between trench gate oxide film 7 and all circumferential points of contact hole 12. Pet. 31–32, 55 (citing Ex. 1005, Figs 4A, 5A).

Limitation 1[f] recites "and said contact metal plug connected to a source metal disposed on top of said circular trench contact." Ex. 1001, 5:27–28. Petitioner identifies Kobayashi's tungsten metal plug 17 connected to source electrode 18. Pet. 32–33, 55 (citing Ex. 1005, 6:64–68, Fig. 5A).

Patent Owner does not specifically contest Petitioner's contentions with respect to limitations 1[b]–1[g], and we are persuaded that Kobayashi teaches each of these limitations, for the reasons given by Petitioner. *See* PO Resp.

4. Conclusion as to Claim 1

For the above reasons, we determine that Petitioner has shown that Kobayashi in combination with Hshieh teaches all the limitations of claim 1, and that a person of ordinary skill in the art would have had reason to combine the features of each reference as Petitioner argues in the Petition. We therefore determine that Petitioner has shown by a preponderance of the evidence that claim 1 is unpatentable under § 103(a) as obvious over Kobayashi and Hshieh.

5. Claims 3 and 4

We determine that Petitioner has shown by a preponderance of the evidence that claims 3 and 4 are unpatentable as obvious over Kobayashi and Hshieh, for the reasons explained below.

Claim 3 recites "said contact metal plug disposed in said hole of said circular trench contact further comprising a Ti/TiN/W metal plug." Ex. 1001, 5:38–40. Thus, claim 3 specifies that the metal plug is made of titanium, titanium nitride, and tungsten. Petitioner identifies Kobayashi's tungsten metal plug 17 deposited on top of titanium and titanium nitride barrier metal 16 within the circular trench contact, as seen below in Kobayashi Figure 5A (annotated). Pet. 32–33, 55 (citing Ex. 1005, 9:30–33, Fig. 5A).

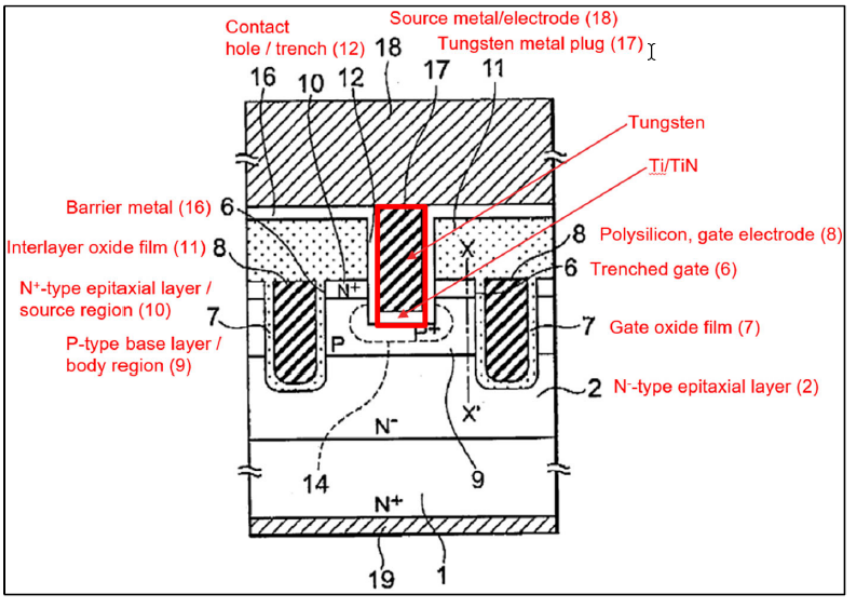

Kobayashi, Figure 5A (annotated)

Claim 4 recites "said source metal disposed on top of and in contact with a top surface of said metal plug further comprising a layer composed of aluminum alloys including alloys of AlCu or AlSiCu." Ex. 1001, 6:3–6. Thus, claim 4 specifies that the source metal is composed of AlCu or AlSiCu. Petitioner identifies Kobayashi's AlSiCu source electrode 18. Pet. 34 (citing Ex. 1005, 9:36–38).

Patent Owner does not specifically contest Petitioner's contentions with respect to claims 3 and 4, except to contend that claim 1 is not unpatentable over Kobayashi and Hshieh, which we previously addressed. PO Resp. 62. We are persuaded that claims 3 and 4 are unpatentable as obvious over Kobayashi and Hshieh, for the reasons given by Petitioner.

6. Claim 5

We determine that Petitioner has shown by a preponderance of the evidence that claim 5 is unpatentable as obvious over Kobayashi and Hshieh, for the reasons explained below.

(a) Petitioner's Contentions

Claim 5 recites "a diameter of a top surface of said circular trench contact is smaller than 1.0 micrometer." Ex. 1001, 6:9–10.

Petitioner contends that 1) Kobayashi teaches a diameter smaller than 1.0 µm, or 2) that the claimed diameter range would have been obvious to a POSITA based on Kobayashi and the knowledge of a POSITA. Pet. 35–36, 49–51, 56, 67 (citing *KSR*, 550 U.S. at 421).

Petitioner identifies Kobayashi's explicit teaching regarding the dimensions of certain features pictured in Figure 5A (seen below, annotated by Petitioner), e.g., a trench width not greater than 0.5 µm, the N+ source layer having a depth of 0.1–0.5 µm, and the P base layer having a depth of 0.5–1.5 µm. Pet. 35 (citing Ex. 1005, 7:49–50, 7:19–21, 8:21–46, Fig. 5A).

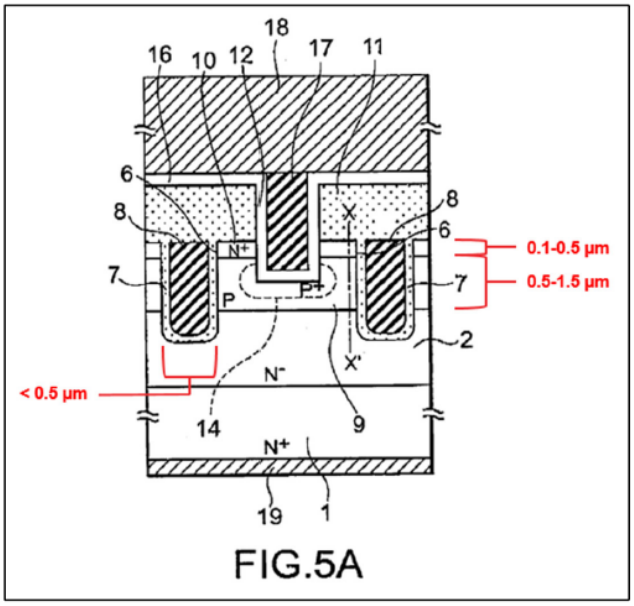

Kobayashi, Figure 5A (annotated)

As seen above, Petitioner annotates Figure 5A with certain dimensions: the trench having a width less than 0.5 µm, the N+ source layer

having a depth of 0.1–0.5 μm, and the P base layer having a depth of 0.5–1.5 μm.

Dr. Liu testifies that, having considered these explicitly described dimensions, Figure 5A appears to be drawn to relative scale except the portion indicated by the "≈" symbol. Ex. 1003 ¶ 81. Thus, Petitioner contends Figure 5A is illustrated to relative scale and "when considering the relative proportions of the MOSFET of Figure 5A, the diameter of the circular trench contact is approximately the same as the width as the trench 6." Pet. 36. (citing Ex. 1003 ¶ 81).

Accordingly, Petitioner contends that Kobayashi teaches a circular trench contact width/diameter not greater than 0.5 μm and certainly under the claimed range of smaller than 1.0 μm. *Id.*

Alternatively, Petitioner contends that the claimed range would have been obvious to a POSITA based on the disclosure of Kobayashi and the knowledge of a POSITA because "[w]hen considering the relative proportions of the MOSFET of Figure 5A . . . , a POSITA would have understood that the diameter of the circular trench contact is approximately the same as the width as the trench 6 (which Kobayashi teaches can be a width less than 1.0 μm)." Pet. 50 (citing Ex. 1005, 7:34–55; Ex. 1003 ¶ 110).

Petitioner further contends "a POSITA would understand several design considerations that would result in a diameter of less than 1 μm" including "the need to minimize the overall width of the cell and minimize the width of the source contact trench for purposes of an easier subsequent filling of the source contact trench without having voids or unwanted

variations in the topography." *Id.* (citing Ex. 1003 ¶ 111). According to Dr. Liu,

> there are [a] plethora of other reasons that the width of the source contact trench would be close to the minimum feasible width (diameter) that can be possibly obtained by the given technology capability at the time of invention (which is no greater than 0.5 μm as stated by Kobayashi). For example, a wider width would lead to wider total width of the unit cell for the Power MOSFET, and thus a larger unit cell area. This would lead to less current drive and higher on resistance per a given silicon area, making the device less economical to manufacture. Conversely, for a given unit cell size, which implies a given fixed distance between two gate trenches, a wider source contract trench width in between the two gate trenches would dictate that the P+ base layer will be closer to its adjacent trench gate on both sides, and would lead to an increase of threshold voltage of the transistor due to the lateral diffusion of the P+ base layer, a problem that Kobayashi was trying to overcome in the first place. One other important consideration for minimizing the width of the source contact trench is the subsequent deposition of the barrier metal layer and the CVD tungsten. A POSITA would have understood that the width of the trench would be not be larger than the thickness of the tungsten deposited. Filling a wider trench contact width would require a thicker tungsten deposition and longer deposition time, and leading to a longer subsequent etch back time to planarize the source contact plug. A POSITA would have known that this is not a desirable manufacturing process flow.

Ex. 1003 ¶¶ 111–114.

(b) <u>Patent Owner's Arguments; Analysis</u>

Patent Owner argues that Kobayashi's Figure 5A is not disclosed as to scale, and therefore, Petitioner's reliance on the disclosed dimensions of other illustrated features (e.g., the trench width) is insufficient to disclose or suggest the recited diameter. PO Resp. 28, 41–45, 62, 66–67.

We agree that Kobayashi' s Figure 5A solely cannot be relied upon as disclosing the claimed diameter. *See Hockerson-Halbertstadt, Inc. v. Avia Group Int'l*, 222 F.3d 951, 956 (Fed. Cir. 2000) (patent drawings not designated as being drawn to scale cannot be relied upon to define precise proportions of elements if the specification is completely silent on the issue). However, we do not agree that Petitioner failed to show Kobayashi suggests the recited diameter.

We disagree with Patent Owner's assertion that Dr. Liu's "vague, purported 'design considerations'" are "unsupported." PO Resp. 43. Although Kobayashi is silent on the width/diameter of the trench contact in Figure 5A, Kobayashi discloses trenched gates having dimensions below 0.5 μm, which demonstrates that it was known in the art, and required no more than an exercise of ordinary skill in the art, to create trenched features of widths well below 1 μm.

Kobayashi also discloses that the width of each trench, and the distance between the adjacent trenches (which includes the trench contact), must be selected to optimum sizes . . . [and] these sizes . . . have some degrees of freedom." Ex. 1005, 7:42–48. This demonstrates a POSITA would seek to optimize trench contact width or diameter. Dr. Liu's testimony regarding design considerations suggests the desirability of a reduced diameter trench contact, e.g., to minimize the width of the trench contact for purposes of easier filling, to minimize the total width of the unit cell, and to minimize manufacturing time by reducing etch back time. *See* Ex. 1003 ¶¶ 111–114. As Patent Owner acknowledges, "there is always a motivation to speed up the fabrication process or shrink feature sizes of semiconductors." PO Resp. 43 (citing 2021 ¶ 131). However, contrary to

Patent Owner's arguments, these are not generic motivations "untethered" from Kobayashi. *Id.* Indeed, Kobayashi directly addresses the fabrication process (including new techniques to obtain trench widths under 0.5 μm) and the need to optimize the size of trench gates and the space in between (which includes the trench contact). Ex. 1005, 7:43–54, 7:19–9:53.

Patent Owner also argues that Petitioner presents no evidence that modifying Kobayashi to have a diameter smaller than 1 μm is predictable. PO Resp. 44. We disagree. As discussed above, Petitioner points to Kobayashi's teachings that the sizes are to be optimized and that the trench gate width is smaller than 0.5 μm, which suggests making other trench features of that width was within ordinary skill. Ex. 1003 ¶ 112. Furthermore, Kobayashi's silence as to the dimensions of the trench contact suggests that the trench contact diameter dimension is likely in the ballpark of the other explicitly disclosed trenched feature dimensions and is a matter of routine optimization. In addition, Patent Owner advances no persuasive evidence that the claimed diameter produces unexpected results or is otherwise critical.

Patent Owner also argues that reducing trench contact diameter has downsides (i.e., reduced ease of filling for metal plugs and reduced current carrying capacity) not addressed by Petitioner; however, Petitioner is not required to address those tradeoffs in its Petition, and we do not see how those tradeoffs would prevent the proposed combination. PO Resp. 44; *see Medichem, S.A. v. Rolabo, S.L.*, 437 F.3d 1157, 1165 (Fed. Cir. 2006) ("a given course of action often has simultaneous advantages and disadvantages, and this does not necessarily obviate motivation to combine."); *Winner Int'l Royalty Corp. v. Wang*, 202 F.3d 1340, 1349 n.8 (Fed. Cir. 2000) ("The fact

that the motivating benefit comes at the expense of another benefit, however, should not nullify its use as a basis to modify the disclosure of one reference with the teachings of another. Instead, the benefits, both lost and gained, should be weighed against one another.”).

Here, Dr. Liu listed numerous benefits of having a reduced diameter, which weigh against the potential downsides raised by Patent Owner. Ex. 1003 ¶¶ 111–114. Moreover, we do not see how the downsides/tradeoffs prevent modifying Kobayashi in the manner suggested when the same tradeoffs appear to be applicable to the ’409 patent.

Having considered Patent Owner’s arguments, and taking into consideration the totality of the evidence including Kobayashi’s Figure 5A, we determine that Kobayashi would have reasonably suggested the claimed diameter to one of ordinary skill in the art. *See In re Wright,* 569 F.2d 1124, 1127–28 (CCPA 1977) (drawings in combination with the written description can be relied on for what they would reasonably teach one of ordinary skill in the art.).

Accordingly, Petitioner has demonstrated by a preponderance of the evidence that claim 5 is unpatentable as obvious over Kobayashi and Hshieh.

F. GROUNDS 1 AND 3: KOBAYASHI

Because Petitioner has met its burden of demonstrating by a preponderance of the evidence that claims 1 and 3–5 are unpatentable over Kobayashi and Hshieh under Ground 4, we do not reach Petitioner’s challenges to the same claims under Grounds 1 and 3.

G. GROUND 2: OBVIOUS OVER KOBAYASHI AND KIKKAWA

Under Ground 2, Petitioner contends that claims 2 and 6 are unpatentable under § 103(a) as obvious over Kobayashi and Kikkawa. Pet. 36–49.

1. Claim 2

We begin our analysis with dependent claim 2. We determine that Petitioner has not shown by a preponderance of the evidence that claim 2 is unpatentable as obvious over Kobayashi and Kikkawa, for the reasons explained below.

Claim 2 recites, "a contact resistance reduction metal layer composed of a titanium (Ti) layer disposed above a top surface said contact metal plug and below a bottom surface of said source metal for reducing a contact resistance between said contact metal plug and said source metal." Ex. 1001, 5:31–35. Thus, claim 2 requires a titanium layer above the top surface of the metal plug and below the source metal.

(a) Petitioner's Contentions

Petitioner acknowledges that Kobayashi lacks a titanium layer above its metal plug 17 and below source metal layer 18 composed of AlCu or AlSiCu. Pet. 37–38 (citing Ex. 1005, 6:61–65, Fig. 5A). Petitioner identifies Kikkawa's multilayer electro- and stress-migration-resistant interconnection structure, in which a titanium layer is included beneath an AlCu or AlSiCu layer. *Id.* (citing Ex. 1007, 4; Ex. 1003 ¶¶ 85–86.).

Petitioner contends that having a bottom titanium layer below a source metal layer of AlCu or AlSiCu was well known. Pet. 38 (citing Ex. 1003 ¶ 85). Petitioner further contends that it would have been obvious to add a titanium bottom layer to source metal layer 18, as seen below in annotated

Figure 5A, to yield a lower contact resistance over time and to mechanically reinforce the source metal layer. *Id.* at 38, 43.

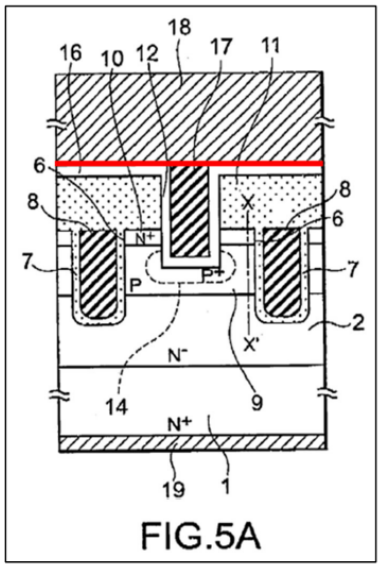

Kobayashi, Figure 5A (annotated)

As seen above in annotated Figure 5A, Petitioner proposes adding, at the red line, a layer of titanium (or a multilayer of titanium and titanium nitride) directly below source metal 18. Pet. 43. The added titanium layer would also be directly above metal plug 17 and barrier metal layer 16, as illustrated in annotated Figure 5A.

(b) Patent Owner's Arguments; Analysis

Although Petitioner's declarant, Dr. Liu, opines that having a bottom titanium layer below a source metal layer of AlCu/AlSiCu was well known, as Patent Owner correctly points out, Kobayashi *already* includes a bottom titanium layer (barrier metal 16) below source metal layer 18 and above silicon substate 10. Pet. 38; PO Resp. 32–33 (citing Ex. 1005, 6:61–64, 9:30–33; Ex. 2021 ¶ 122). Notably, Kobayashi's barrier metal 16 is below source metal layer 18 and *below* metal plug 17 (not *above* the metal plug as required by claim 2). *See* Ex. 1005, Fig. 5A. Neither Petitioner nor Dr. Liu

meaningfully addresses this fact. *See* Pet. 38–49; Pet. Reply 19; Ex. 1003 ¶¶ 85–86, 98–107.

We agree with Patent Owner that Petitioner has not sufficiently explained why a person of ordinary skill would have sought to add an additional titanium layer above Kobayashi's barrier metal 16 and metal plug 17, or why such a combination would have been predictable. PO Resp. 33.

Nor has Petitioner sufficiently explained why a person of ordinary skill would have sought to add a titanium layer adjacent tungsten metal or had a reasonable expectation of success. *See* Pet. 41–49. As pointed out by Patent Owner, Kikkawa only teaches using titanium and titanium nitride between AlCu/AlSiCu and a *silicon substate*. PO Resp. 33; Ex. 1007, 4, Figures 1(a)–(c). Kikkawa explains that contact resistance is improved because titanium silicide is formed at the interface between the titanium layer and the silicon substrate. Ex. 1007, 4. If Kobayashi were modified as proposed, this reduced contact resistance layer of titanium silicide would not be formed between any titanium layer and Kobayashi's tungsten metal plus 17. Ex. 1007, 4. There is simply no teaching in Kikkawa or otherwise of record that titanium can be layered on tungsten and below AlCu/AlSiCu. Ex. 2021 ¶ 109.

Furthermore, Kikkawa's teaching regarding increased mechanical strength refers to an intermediate titanium layer between layers of the AlSiCu source metal, not the bottom titanium layer above the metal plug and below the source metal.

Accordingly, we find insufficient evidence to support Petitioner's position that layering titanium, in the manner proposed, was well known or

would have achieved the benefits argued by Petitioner with a reasonable expectation of success.

2. Claim 6

Claim 6 recites "said metal plug contacting a source metal disposed on top of said metal plug wherein said source metal layer composed of Ti/AlCu or Ti/AlSiCu alloys." Ex. 1001, 6:35–38. Similar to claim 2, claim 6 requires a titanium layer on top of the metal plug. Like its challenge to claim 2, Petitioner relies on Kikkawa to show that modifying Kobayashi to include an additional titanium layer, located on top of the tungsten metal plug, would have been obvious. Pet. 39–49. We determine that Petitioner has not shown by a preponderance of the evidence that claim 6 is unpatentable as obvious over Kobayashi and Kikkawa, for the same reasons explained above with respect to claim 2. *See infra* section III.G.1.

H. GROUND 5: KOBAYASHI, KIKKAWA, AND HSHIEH

Under Ground 5, Petitioner contends that claims 2 and 6 are unpatentable under § 103(a) as obvious over Kobayashi, Kikkawa, and Hshieh. Pet. 63–67. Petitioner relies on similar arguments and evidence presented under Ground 2, which we found to be insufficient. Pet. 36–49, 63–67; Ex. 1003 ¶¶ 83–108, 144–155. For the reasons discussed above, we determine that Petitioner has not shown by a preponderance of the evidence that either claim 2 or claim 6 is unpatentable as obvious over Kobayashi, Kikkawa, and Hshieh. *See infra* section III.G.1.

IV. CONCLUSION

We conclude that Petitioner has shown that claims 1 and 3–5 of the '409 patent are unpatentable by a preponderance of the evidence, and

Petitioner has not shown that claims 2 and 6 are unpatentable by a preponderance of the evidence.

In summary:

Claims	35 U.S.C. §	Reference(s)	Claims Shown Un-patentable	Claims Not Shown Unpatentable
1, 3–5	102(b)	Kobayashi[12]		
2, 6	103(a)	Kobayashi, Kikkawa		2, 6
5	103(a)	Kobayashi[13]		
1, 3–5	103(a)	Kobayashi, Hshieh	1, 3–5	
2, 6	103(b)	Kobayashi, Kikkawa, Hshieh		2, 6
Overall Out-come			1, 3–5	2, 6

[12] Because challenged claims 1 and 3–5 are unpatentable over Petitioner's Ground 4 (Kobayashi and Hshieh), we do not reach this ground.

[13] Because challenged claim 5 is unpatentable over Petitioner's Ground 4 (Kobayashi and Hshieh), we do not reach this ground.

V. ORDER

It is

ORDERED that Petitioner has shown that claims 1 and 3–5 of the ’409 patent are unpatentable;

FURTHER ORDERED that Petitioner has not shown that claims 2 and 6 of the ’409 patent are unpatentable; and

FURTHER ORDERED that because this decision is final, a party to the proceeding seeking judicial review of the decision must comply with the notice and service requirements of 37 C.F.R. § 90.2.

For PETITIONER:

Charles McMahon
BENESCH FRIEDLANDER COPLAN & ARONOFF LLP
cmcmahon@beneschlaw.com

Mackenzie Martin
John G. Flaim
Ellen Cheong
BAKER & McKENZIE LLP
mackenzie.martin@bakermckenzie.com
john.flaim@bakermckenzie.com
ellen.cheong@bakermckenzie.com

For PATENT OWNER:

Michael Saunders
Bryan Atkinson
DICKINSON WRIGHT PLLC
msaunders@dickinson-wright.com
batkinson@dickinsonwright.com