NUHN

A FAMILY BUSINESS SINCE 1902

OPERATOR'S/SAFETY MANUAL

2017 Edition

LAGOON CRAWLER
Amphibious Agitator

PREFACE

Thank you for choosing the Nuhn Lagoon Crawler. This product has exceeded the industry standards through superior design. We anticipate your satisfaction in using the Crawler for your liquid manure management.

The Owner's Manual is provided to assist you in learning about the proper use and maintenance of your new Nuhn Lagoon Crawler. Please read your manual carefully now, and whenever you have a question about your Crawler.

Nuhn Industries Ltd.

NUHN15000046410

Exhibit 2036
Bazooka v. Nuhn - IPR2024-00098
Page 2 of 35

1 TABLE OF CONTENTS

1 TABLE OF CONTENTS 3
2 INTRODUCTION 5
2.1 AFTER-SALES SERVICE 5
2.2 WARRANTY 5
2.3 GENERAL DIMENSIONS 5
2.4 TECHINICAL SPECIFICATIONS 6
3 GENERAL OPERATION 7
3.1 GENERAL SAFETY MEASURES 7
3.2 CONTROLLER OVERVIEW 8
3.2.1 QUICK REFERENCE GUIDE 8
3.2.2 SYNCHRONIZE REMOTE 10
3.3 IDENTIFICATION LIGHTS 10
3.4 STARTING THE CRAWLER 11
3.4.1 JUMP STARTING 12
3.4.2 COLD WEATHER STARTING 12
3.5 DRIVING THE CRAWLER 12
3.5.1 DRIVING INTO THE LAGOON 13
3.5.2 EXITING A LAGOON WITH A GRADUAL SLOPE 13
3.5.3 EXITING A LAGOON WITH A STEEP SLOPE OR WHERE TRACTION IS LIMITED 13
3.6 AGITATING THE LAGOON 14
3.7 REFUELING 16
4 MAINTENANCE 17
4.1 GENERAL SAFETY MEASURES 17
4.2 LUBRICATION 19
4.2.1 LUBRICATION SCHEDULE 19
4.3 CLUTCH 20
4.4 BATTERY 20
4.4.1 REPLACING THE BATTERY 20
4.4.2 CHARGING THE BATTERY 20
4.5 CRAWLER TOWING 20
5 ELECTRICAL SYSTEM 21
6 HYDRAULIC SCHEMATICS 26
7 TROUBLESHOOTING 29
7.1 CRAWLER BREAKDOWN IN A LAGOON 29
7.1.1 RUNNING OUT OF FUEL 29

NUHN15000046411

Exhibit 2036
Bazooka v. Nuhn - IPR2024-00098
Page 3 of 35

8 WARRANTY 30
8.1 NUHN WARRANTY 30
8.2 NO IMPLIED WARRANTY, REPRESENTATION OF CONDITION 30
8.3 WARRANTY NOT COVERED BY NUHN 31
9 LIABILITY....32
10 NOTES 34
11 WARRANTY CARD 35

NUHN15000046412

Exhibit 2036
Bazooka v. Nuhn - IPR2024-00098
Page 4 of 35

2 INTRODUCTION

2.1 AFTER-SALES SERVICE

It is the owner's responsibility to ensure that the Lagoon Crawler receives the proper maintenance at different service levels.

After-sales service can be performed by your local Nuhn dealer regarding general service. Specific maintenance on the engine should be performed by an authorized Cummins or John Deere dealer (depending on the engine).

2.2 WARRANTY

The warranty section contains detailed information about the warranties made by Nuhn Industries and your obligations under these warranties.

This Owner's Manual contains additional information pertaining to the proper use and maintenance of your new Nuhn Lagoon Crawler.

2.3 GENERAL DIMENSIONS

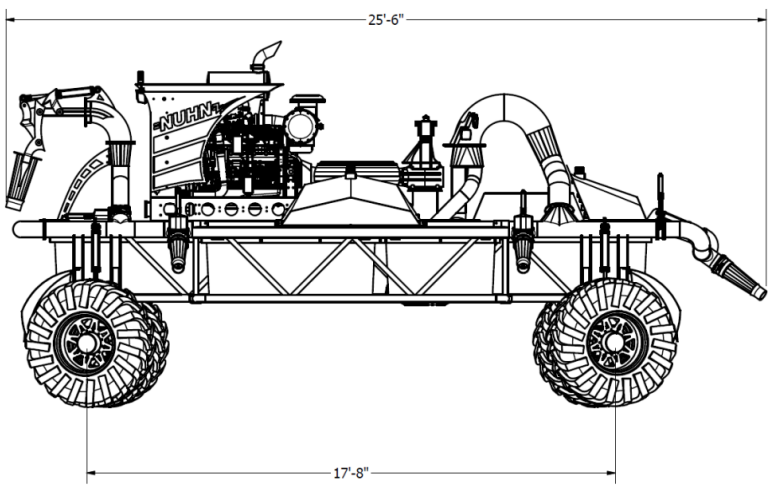

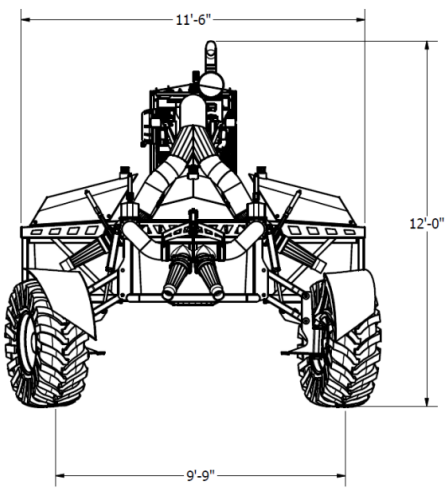

NUHN15000046413

Exhibit 2036
Bazooka v. Nuhn - IPR2024-00098
Page 5 of 35

2.4 TECHNICAL SPECIFICATIONS

	Cummins QSB6.7 270hp @ 2,000RPM 728lb-ft @ 1,500RPM 6.7L Turbocharged and Charge Air Cooled Dual Disc Clutch
Centrifugal Pump	10" Quad Port Header Pump 10,000GPM capacity 14" pump inlet 10" pump discharge 21" diameter impeller 4 outlets off of pump housing Tungsten carbide mechanical seal *Designed to work in the harshest sand environments* *Oil bath assembly - requires very little operator maintenance* Specifically designed for harsh lagoon environment *Pump is submerged in lagoon so it will not lose its prime* *Semi-open impellor design allows large foreign material to pass through pump*
User Interface	Complete Wireless Control All of the machine operation functions are controlled through the remote 50 hour battery life Functions: *Boat forward/reverse, as well as speed control* *Boat rotate left/right* *Boat shift left/right* *Drive forward/reverse* *Steer left/right* *Axle raise/lower* *Agitation gun movements* *Engine start/stop* *Engine throttle increase/decrease* *Clutch engage/disengage*
Drive System	Off-Road Independent A-Arm Suspension Four-Wheel Drive Four-Wheel Steering System 750/50 R24 Radial Tires Two Speed Hydraulic Wheel Drives High torque mode for crawling out of lagoons High speed mode for transporting on land
Agitation	7 Agitation Jets 1 - 6" nozzle on front 2 - 4" nozzles on rear 4 - 4" nozzles on sides for steering

NUHN15000046414

Exhibit 2036
Bazooka v. Nuhn - IPR2024-00098
Page 6 of 35

3 GENERAL OPERATION

3.1 GENERAL SAFETY MEASURES

This chapter contains important information, tips, and suggestions for safe operation. Please make certain that you follow the suggestions and heed the warnings given. It is in your own interest and the interest of the people and property around you. However, please note that important safety information regarding your Crawler and its operation will be found in all other chapters of this owner's manual. Please be sure that this manual always remains with your Crawler whenever you lend, or sell it to another individual. Remember – safety first!

Safety First!
Your safety and the safety of surrounding people and property should not be left to chance. Safe operation of this equipment is key. Safety is everyone's responsibility.

⚠ Warning!
Never ride on this machine. This is not a passenger vehicle. **Never operate beyond the limits of your skill and experience.** **Always use in accordance with prevailing weather, environmental, and traction conditions.**

Always ensure that there is no one situated around the Crawler upon starting. The operator should be familiar with the controls and surrounding environment.

This is an over-width piece of equipment and should not be operated on narrow roads, or in high traffic areas. Be aware of your local road regulations.

Breaking in a new engine: See the Engine Manual
For the first 100 hours, the engine should be run at half speed or for short periods at full power.

3.2 CONTROLLER OVERVIEW

3.2.1 QUICK REFERENCE GUIDE

ID	Name	Function
P	Power	Turns the remote on / off.
1	Engine Start	When the control panel is on Auto Mode, pressing this button once and releasing will disengage the clutch, wake up the control panel and start the engine. **DO NOT PRESS MULTIPLE TIMES**
2	Engine Rev	When pressed, the engine will throttle up several hundred RPM. When the button is held, the engine will continuously throttle up, until the button is released.
3	Engine Stop	When the control panel is on Auto Mode, pressing this button will turn off the engine. **Note**: It is not recommended to turn off the engine while the Crawler is in the middle of a lagoon.
4	Clutch Engage	When pressed, the engine will throttle down and the clutch will engage the header pump.
5	Clutch Disengage	When pressed, the engine will throttle down and the clutch will disengage the header pump.
6	Engine Idle	When pressed, the engine will throttle down several hundred RPM. When held, the engine will continuously throttle down, until the button is released.
7	High Speed Forward	When pressed, the Crawler will move forward in its highest speed mode. This should only be pressed when driving on flat, open land.
8	Drive Forward	When pressed, the Crawler will move forward in its highest torque mode. This should be used to drive into a lagoon. It should also be used when driving around obstacles.
9	High Speed Reverse	When pressed, the Crawler will move backwards in its highest speed mode. This should only be pressed when driving on flat, open land.
10	Steer Left	This button will steer the front axle to the left.
11	Drive Reverse	When pressed, the Crawler will move backwards in its highest torque mode. This should be used to drive backwards out of a lagoon. It should also be used when driving around obstacles.
12	Steer Right	This button will steer the front axle to the right.
13	Boat Shift Left	This button will shift the Crawler left when it is submerged in the lagoon.
14	Boat Forward	This button will rotate the rear nozzles, causing the Crawler to propel forward when it is submerged in the lagoon. Even when the button is released, the Crawler will continue to move at that speed.
15	Boat Shift Right	This button will shift the Crawler right when it is submerged in the lagoon.
16	Boat Rotate Left	This button will rotate the Crawler to the left when it is submerged in the lagoon.
17	Boat Reverse	This button will rotate the rear nozzles, causing the Crawler to propel backwards when it is submerged in the lagoon. Even when the button is released, the Crawler will continue to move at that speed.
18	Boat Rotate Right	This button will rotate the Crawler to the right when it is submerged in the lagoon.
19	Front Axle Up	This button will raise the height of the front axle.
20	Rear Valve Open	This button will open the rear valve. Press and hold this button for approx. five seconds to completely open the valve.
21	Rear Axle Up	This button will raise the height of the rear axle.
22	Front Axle Down	This button will lower the height of the front axle.
23	Rear Valve Close	This button will close the rear valve. Press and hold this button for approx. five seconds to completely close the valve.
24	Rear Axle Down	This button will lower the height of the rear axle.
25	Agitator Up	This button will aim the agitator nozzle higher.
26	Aux. Valve Open	If equipped, pressing this button will open the auxiliary valve.
27	Agitator Valve Open	This button will open the agitator valve. Press and hold this button for approx. five seconds to completely open the valve.
28	Agitator Down	This button will aim the agitator nozzle lower.
29	Aux. Valve Close	If equipped, pressing this button will close the auxiliary valve.
30	Agitator Valve Close	This button will close the agitator valve. Press and hold this button for approx. five seconds to completely close the valve.
31	Rear Axle Left	This button will steer the rear axle to the left.
32	Rear Axle Right	This button will steer the rear axle to the right.
33	Agitator Left	If equipped, pressing this button will aim the agitator nozzle to the left.
34	Agitator Right	If equipped, pressing this button will aim the agitator nozzle to the right.

NUHN15000046417
Exhibit 2036
Bazooka v. Nuhn - IPR2024-00098
Page 9 of 35

3.2.2 SYNCHRONIZE REMOTE

1. Turn off crawler remote.
2. Turn off power to Crawler.
3. Push hold power button remote for 10 seconds or until the light on the remote starts flashing.
4. Release power button and then turn on power switch on the Crawler.

This should synchronize the remote to the Lagoon Crawler and is ready to use.

3.3 IDENTIFICATION LIGHTS

COLOUR	WARNING	DESCRIPTION
Yellow	Rotating Strobe	Yellow continuous flashing when there is power to the electrical system.
Red	Low Fuel Warning	Red blinking light is warning that the machine is low on fuel, and should be refueled immediately.
Green	Low Oil Warning	Green blinking light is warning low oil in the hydraulic reservoir. The Crawler should immediately be returned to land and turned off right away. Inspect the vehicle for leaks / cut hydraulic lines.
Blue	Engine Fault Code	Blue blinking light is indicating Engine Fault Code. Could be sensing water in fuel or engine is overheating or low coolant level. Return machine to land, and turn it off immediately.

Always perform a physical check of the fuel level before the Crawler enters a lagoon. The "low fuel" indicator light is for convenience only, and it is possible that there could be an electrical failure. Do not rely solely on the indicator lights.

NUHN15000046418

Exhibit 2036
Bazooka v. Nuhn - IPR2024-00098
Page 10 of 35

3.4 STARTING THE CRAWLER

The silver knob in the ignition panel must be pulled in order for the radio remote control to function.

There are two modes to start the Crawler in. Run Mode will run the engine; however, the remote will not have any control over starting and stopping the engine. If placed in Auto Mode, the Crawler can be started and stopped remotely through the controller. See the controller diagram for a list of functions.

Run Mode – Turn the key to the right. That turns the ignition on.

Auto Mode – Turn the key to auto, and leave the key in auto mode for 15 seconds. Push start button only once and wait for the system to:

- disengage clutch
- start the engine.

If you want to stop the motor, you must press the "STOP" button on the controller once and wait for the system to shut down.

Auto start will not function if there are active engine fault codes.

Caution

To prevent damage to the starting motor, do not engage the starting motor more than 10 seconds. Wait 10 seconds between each attempt to start.

Before you start the engine, disengage the clutch.

If the engine does not start after three attempts, check the fuel supply system. Absence of blue or white exhaust smoke during cranking indicates no fuel is being delivered.

Caution

The engine must have adequate oil pressure within 15 seconds after starting. If the WARNING lamp on the engine indicating low oil pressure has not gone out or there is no oil pressure indicated on a gauge within 15 seconds, shut off the engine immediately to avoid engine damage.

Idle the engine 3 to 5 minutes before operating the Crawler under load or in a lagoon.

After starting a cold engine, increase the engine speed (rpm) slowly to provide adequate lubrication to the bearings and to allow the oil pressure to stabilize (around 1100 rpm).

Caution

Do not operate engine at low idle for long periods with engine coolant temperature below the minimum specification in Maintenance Specifications of the engine operating manual. This can result in the following:

- **Fuel dilution of the lubricating oil**
- **Carbon buildup in the cylinder**
- **Cylinder head valve sticking**
- **Reduced performance**

3.4.1 JUMP STARTING

⚠ Warning!

Batteries can emit explosive gases. To avoid personal injury, always ventilate the compartment before servicing the batteries. To avoid arcing, remove the negative (-) battery cable first and attached the negative (-) battery cable last.

Caution

When using jumper cables to start the engine, be sure to connect the cables in parallel: positive (+) to positive (+) and negative (-) to negative (-). When using an external electrical source to start the engine, turn the disconnect switch to the OFF position.

To avoid damage to engine parts, do not connect jumper starting or battery charging cable to any fuel system or electronic component.

3.4.2 COLD WEATHER STARTING

Caution

To reduce the possibility of damage to the lubricating oil pan, due to the composite materials used in the manufacture of the lubricating oil pan, under no circumstances should an external heat source be applied directly or indirectly to the lubricating oil pan.

Use the block heater on the engine to keep the temperature warm enough to start in cold weather. Keep block heater plugged in a day in advance for cold start. Allow 20 minute warm up on high idle (1100 rpm) before operating.

3.5 DRIVING THE CRAWLER

⚠ Warning!

When driving into or out of the lagoon, the Crawler should be as low to the ground as possible. A lower center of gravity reduces the risk of rollover.
Machine should enter and exit the lagoon at a 90° angle to the shoreline to reduce the risk of rollover.

When driving on land, the machine may be driven in any direction, using the four drive buttons: 'Drive Forward' and 'Drive Reverse' make the machine move forward and in reverse; 'Left' and 'Right' steer the wheels accordingly.

Note: If the wheels become misaligned from each other (left from right), steer all wheels so that the steering cylinders are all at the end of their stroke. This will realign the wheels.

'Drive Forward' and 'Drive Reverse' are slow-speed, high-torque drive controls, and should be used when driving on steep slopes.

'High Speed Fwd' and 'High Speed Rev' are high-speed, low-torque drive controls, and should be used when driving the vehicle in large, open areas (i.e. obstacle-free).

The 'Front Axle' and 'Rear Axle' heights can be controlled independently of one another. When controlling height, always have the machine level or have the oil tank higher than the pump (back higher than the front). If the front is higher than the rear, low hydraulic oil levels can result in cavitation of the hydraulic pumps. Also there is a risk of running out of fuel on inclines if the engine comes out first.

** ENGINE SHOULD ALWAYS GO IN FIRST AND COME OUT LAST**

3.5.1 DRIVING INTO THE LAGOON

When driving into the lagoon, the machine should be driven in **forwards** only. The oil tank always needs to be above the motor to avoid cavitation of the pumps and loss of power. Also, the front axle's height should be raised completely to reduce the angle of the machine. See figure below.

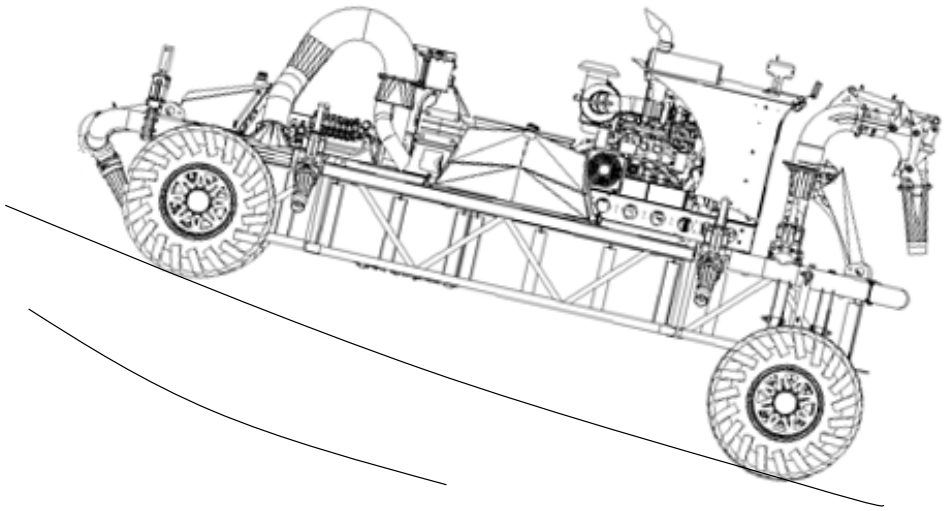

The clutch should be disengaged when driving into the lagoon. Drive slowly in "Drive Forward" mode.

Once the machine is in the lagoon, the drive wheels should only be used as necessary, and they should be steered straight. The wheels should be raised up.

3.5.2 EXITING A LAGOON WITH A GRADUAL SLOPE

When exiting a lagoon with a gradual slope, the operator must first position the Crawler so that it is 90° with the shoreline. You must back straight out. Leave the boat direction in reverse to protect the rear jets from being damaged or clogged. Using the boat shift left/right functions will be very helpful to get the Crawler lined up with the exit driveway.

The Crawler needs to back out of a lagoon, not drive out. This ensures that the oil tank is always above the hydraulic pumps. See the diagram above for proper exit procedure.

The back axle of the unit (the first one to drive out) should be lowered with the unit and the rear axle should be completely lowered. Once the axle makes contact with the ground, the clutch can be disengaged and the Crawler can be driven out of the lagoon. Steering the wheels must be utilized at this point to avoid having the Crawler skid sideways and roll over.

3.5.3 EXITING A LAGOON WITH A STEEP SLOPE OR WHERE TRACTION IS LIMITED

The procedure for driving out of a steep lagoon is the same as exiting a lagoon with a gradual slope. In addition to driving out of the lagoon, the Crawler will need assistance with a tow cable.

There are three pull points on the back of the Crawler where a tow cable can be hooked to pull the unit out of a lagoon. Even though the Crawler is being towed, the operator must still use the remote to help drive out, otherwise the wheels will lock up.

NUHN15000046421
Exhibit 2036
Bazooka v. Nuhn - IPR2024-00098
Page 13 of 35

3.6 AGITATING THE LAGOON

When in the lagoon, the Crawler is propelled using the main 10" header pump. To get power to this pump, the clutch must be engaged. To engage the clutch, simply press 'Clutch Eng'. Ensure that the engine is idling when engaging or disengaging the clutch, in order to prevent damage to the machinery.

Ensure proper clutch function and maintain as necessary before entering lagoon.

The 'Rear Valve Open' and 'Rear Valve Close' buttons control the gate valve's position. In order to manoeuver the lagoon, the rear valves must be open. Always leave the rear valve open when engaging or disengaging the pump to prevent pressure build up or damage to the pump.

The rear jets on the Crawler are used for propelling the vehicle forward or reverse. By pressing the 'Boat Forward' and 'Boat Reverse' buttons on the controller, the Crawler's speed can be controlled by the angle of the nozzle. Best sub-surface agitation occurs when the jets are aimed straight down and the vehicle is moving forward slowly.

⚠ **Warning!**
Staying in one position for an extended period of time can result in excessive erosion of the lagoon bottom.

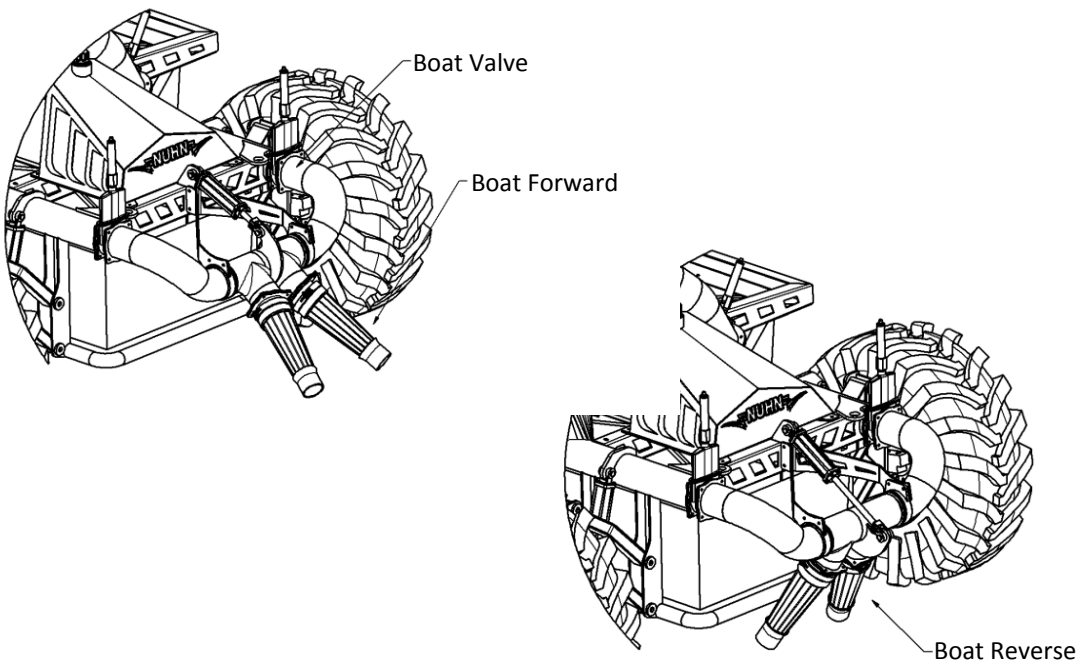

Rear View

The Boat Direction buttons 'Left' and 'Right' are used to rotate the machine in that direction. The 'Shift Left' and 'Shift Right' buttons are used to move the entire machine sideways in that direction. The diagram below shows the difference between 'Left' and 'Shift Left'.

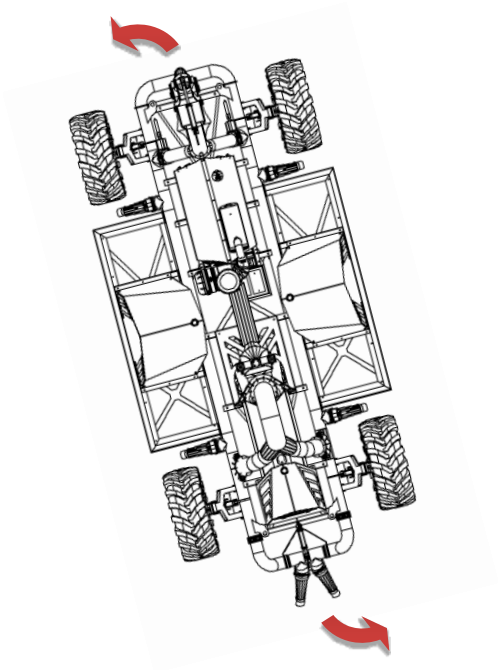

Left

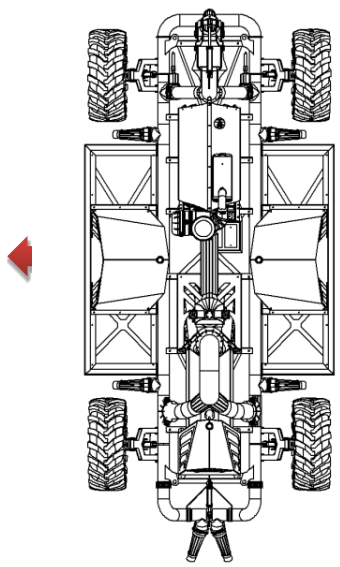

Shift Left

In order to use the front cannon, the agitator valve must be open. The agitator valve can be opened by pressing the 'Agitator Open' button, and closed using the 'Agitator Close' button.

The 'Agitator Up' and 'Agitator Down' buttons direct the nozzle up and down.

Note: When the agitator valve is open, more volume is being pumped to the front. This leaves less volume to push the Crawler from side to side for manoeuvering the lagoon, and decreases the Crawler's overall speed.

NUHN15000046423

Exhibit 2036
Bazooka v. Nuhn - IPR2024-00098
Page 15 of 35

3.7 REFUELING

Use low sulphur diesel fuel, dyed or not dyed.

There are two fuel tanks on the Crawler. You can use both ports simultaneously, or either one separately. Fill both tanks. Shut the engine off first. In cold weather conditions, add diesel anti-freeze. If you run out of fuel, always prime the engine before restarting. The primer is on the fuel filter base.

Ensure you do not run out of fuel while in the lagoon. Watch for the low fuel warning light and pull the Crawler out of the lagoon for refueling.

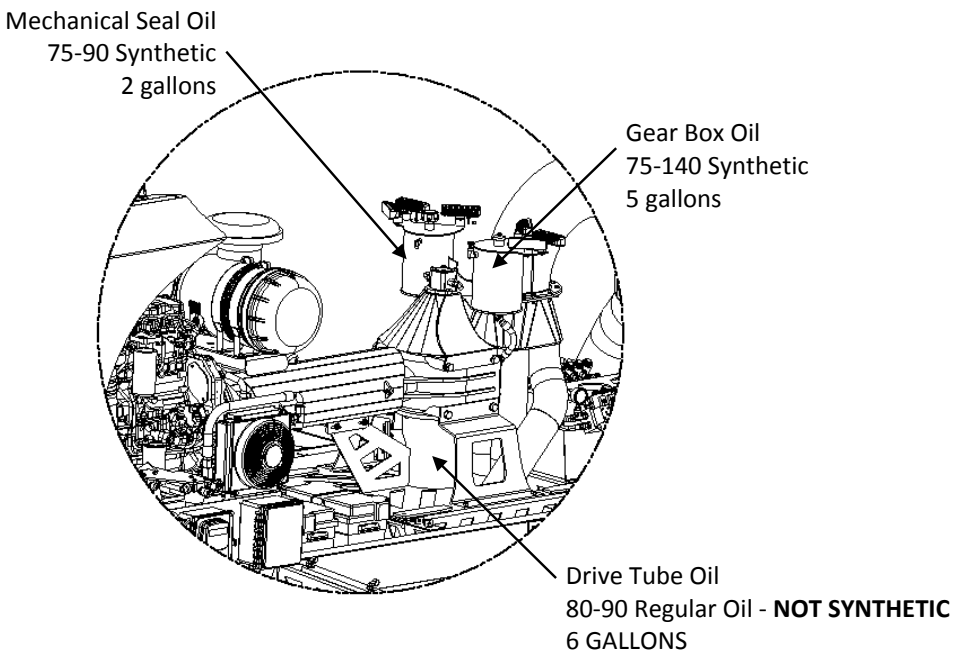

NUHN15000046424

Exhibit 2036
Bazooka v. Nuhn - IPR2024-00098
Page 16 of 35

4 MAINTENANCE

4.1 GENERAL SAFETY MEASURES

All maintenance should be carried out while the engine is off!

Take the time to read and understand all maintenance schedules. Please contact Nuhn Industries if you have any questions.

Work in an area that is dry, well lit, ventilated, and free from clutter, loose tools, parts, ignition sources and hazardous substances. Be aware of hazardous conditions that can exist.

Always wear protective glasses and protective shoes when working.

Rotating parts can cause cuts, mutilation or strangulation.

Do not wear loose-fitting or torn clothing. Remove all jewelry when working.

Disconnect the battery (negative cable first) and discharge any capacitors before beginning any repair work. Disconnect the air starting motor if equipped to prevent accidental engine starting. Put a "Do Not Operate" tag in the operator's compartment or on the controls.

Use ONLY the proper engine barring techniques for manually rotating the engine. Do not attempt to rotate the crankshaft by pulling or prying on the fan. This practice can cause serious personal injury, property damage, or damage to the fan blade(s) causing premature fan failure.

If an engine has been operating and coolant is hot, allow the engine to cool before slowly loosening the filler cap to relieve the pressure from the cooling system.

Always use blocks or proper stands to support the product before performing any service work. Do not work on anything that is supported ONLY by lifting jacks or a hoist.

Relieve all pressure in the air, oil, fuel, and cooling systems before any lines, fittings, or related items are removed or disconnected. Be alert for possible pressure when disconnecting any device from a system that utilizes pressure. Do not check for pressure leaks with your hand. High pressure oil or fuel can cause personal injury.

To reduce the possibility of suffocation and frostbite, wear protective clothing and ONLY disconnect liquid refrigerant (Freon) lines in a well-ventilated area. To protect the environment, liquid refrigerant systems must be properly emptied and filled using equipment that prevents the release of refrigerant gas (fluorocarbons) into the atmosphere. Federal law requires capturing and recycling refrigerant.

To reduce the possibility of personal injury, use a hoist or get assistance when lifting components that weigh 23kg (50lb) or more. Make sure all lifting devices such as chains, hooks, or slings are in good condition and are of the correct capacity. Make sure hooks are positioned correctly. Always use a spreader bar when necessary. The lifting hooks must not be side-loaded.

Corrosion inhibitor, a component of SCA and lubricating oil, contains alkali. Do not get the substance in your eyes. In case of contact, immediately flood eyes with large amounts of water for a minimum of 15 minutes. Avoid prolonged or repeated contact with skin. In case of contact, immediately wash skin with soap and water. Do not swallow internally. In the event that substance is ingested, IMMEDIATELY CALL A PHYSICIAN. KEEP OUT OF REACH OF CHILDREN.

Naptha and Methyl Ethyl Ketone (MEK) are flammable materials and must be used with caution. Follow the manufacturer's instructions to provide complete safety when using these materials. KEEP OUT OF REACH OF CHILDREN.

To reduce the possibility of burns, be alert for hot parts on products that have just been turned off, exhaust gas flow, and hot fluids in lines, tubes, and compartments.

Always use tools that are in good condition. Make sure you understand how to use the tools before performing any service work. Always use the same fastener part number (or equivalent) when replacing fasteners. Do not use a fastener of lesser quality if replacements are necessary.

When necessary, the removal and replacement of any guards covering rotating components, drives, and/or belts should only be carried out by a trained technician. Before removing any guards, the engine must be turned off and any starting mechanisms must be isolated. All fasteners must be replaced on re-fitting the guards.

Do not perform any repair when fatigued or after consuming alcohol or drugs that can impair your functioning.

Some state and federal agencies in the USA have determined that used engine oil can be carcinogenic and can cause reproductive toxicity. Avoid inhalation of vapours, ingestion, and prolonged contact with used engine oil.

Do not connect the jumper starting or battery charging cables to any ignition or governor control wiring. This can cause electrical damage to the ignition or governor.

Always torque fasteners and fuel connections to the required specifications. Over tightening or under tightening can allow leakage. This is critical to the natural gas and liquefied petroleum gas fuel and air systems.

Always test for fuel leaks as instructed, as odorant can fade.

Close the manual fuel valves prior to performing maintenance and repairs, and when storing the vehicle inside.

Coolant is toxic. If not reused, dispose of in accordance with local environmental regulations.

The catalyst reagent contains urea. Do not get the substance in your eyes. In case of contact, immediately flood eyes with large amounts of water for a minimum of 15 minutes. Avoid prolonged contact with skin. In case of contact, immediately wash skin with soap and water. Do not swallow internally. In the event the catalyst reagent is ingested, contact a physician immediately.

The catalyst substrate contains Vanadium Pentoxide. Vanadium Pentoxide has been determined by the State of California to cause cancer. Always wear protective gloves and eye protection when handling the catalyst assembly. Do not get the catalyst material in your eyes. In case of contact, immediately flood eyes with large amounts of water for a minimum of 15 minutes. Avoid prolonged contact with skin. In case of contact, immediately was skin with soap and water.

It is the owner's responsibility to ensure that the proper maintenance is performed on the Crawler.

Before each use, check fluid levels.

NUHN15000046426

Exhibit 2036
Bazooka v. Nuhn - IPR2024-00098
Page 18 of 35

4.2 LUBRICATION

4.2.1 LUBRICATION SCHEDULE

Check engine operator's manual for maintenance schedules pertaining to the engine.

Component	Oil	Interval
Main Drive Gear Box	75-140 Synthetic	First change: 50 hours Second and after: 500 hours or 1 year
Wheel Drive Hubs	75-90 Synthetic	First change: 200 hours or 2 months Second and after: 1000 hours or 2 year
Mechanical Seal Chamber	75-90 Synthetic	Change every pumping season. 50 hrs first change
Vertical Drive Shaft Tube	UTF	Change every 3 years or as necessary.

Note: To avoid sludge deposit, change oil while it is still warm after stopping the machine.

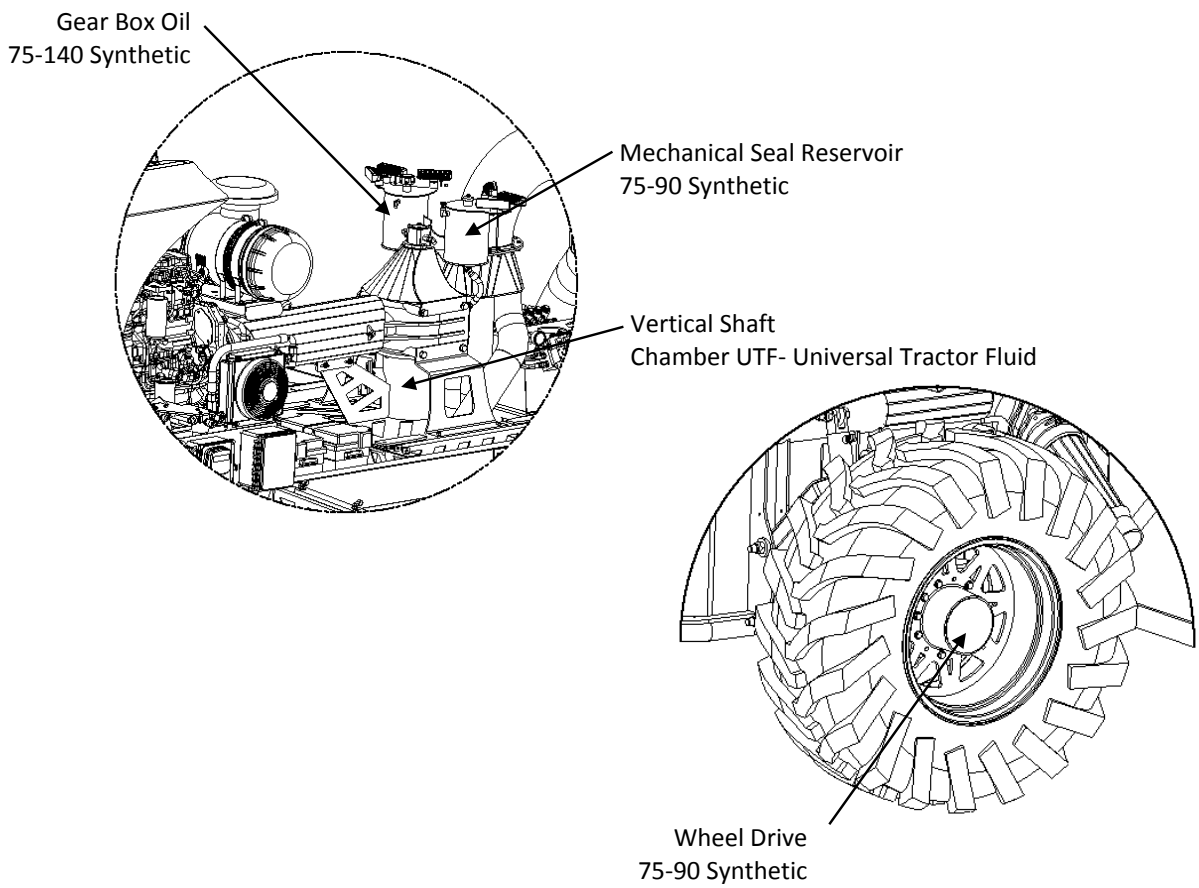

NUHN15000046427
Exhibit 2036
Bazooka v. Nuhn - IPR2024-00098
Page 19 of 35

4.3 CLUTCH

There is a maintenance plate attached to the clutch.

The clutch needs adjusting if the hand lever does not lock into place when engaged, if it pops out on its own, or if the clutch housing heats up.

Remove the top plate from the clutch housing. Disengage the locking pin and turn the adjusting ring or yoke clockwise to have 133-177 ft-lbs. or 181-240 Nm operating shaft torque to engage the clutch. The new clutch discs require several adjustments during the breaking-in period. (20 hrs and 50 hrs).

Grease the main bearing with one shot of NLGI NO2 Lithium grease.
1 shot of grease every 10 hours or operation.
Grease the engaging shaft every 100 hours or 3 months.

4.4 BATTERY

Keep battery posts free from corrosion. There are two 12-volt batteries. This is 12-volt set up system. Maintain the acid levels in the batteries.

4.4.1 REPLACING THE BATTERY

Replace the batteries with 1250 cranking amps.

4.4.2 CHARGING THE BATTERY

Any 12-volt charger will charge the battery. Do not charge with the battery charger set to engine crank.

4.5 CRAWLER TOWING

Entering and Exiting a Steep Lagoon Bank:
There are two tow hooks on the rear of the Crawler. It is recommended that a tow rope be attached as a safety line. When entering a lagoon, the tow rope helps prevent sliding out of control. When exiting the lagoon, go rear first, and use the remote to help drive out, or the wheels will lock.

Towing on flat land is not recommended, it can cause damage to drive hubs.

NUHN15000046428
Exhibit 2036
Bazooka v. Nuhn - IPR2024-00098
Page 20 of 35

5 ELECTRICAL SYSTEM

5.1 SERVICING ELECTRICAL

After each pumping season or 2 times annually:

1. Open electrical box and remove any moisture
2. Spray a generous coating of electrical safe corrosion inhibitor, dielectric grease on all terminals, relays and fuses.
3. Pull each solenoid magnet off (one at a time) and clean stems and spray with corrosion inhibitor then replace the magnet.
4. Remove each din connector (plug on the magnet) one at a time and spray with corrosion inhibitor and replace connectors.

NUHN15000046429

Exhibit 2036
Bazooka v. Nuhn - IPR2024-00098
Page 21 of 35

5.2 Electrical Schematics

WIRELESS OUTPUT

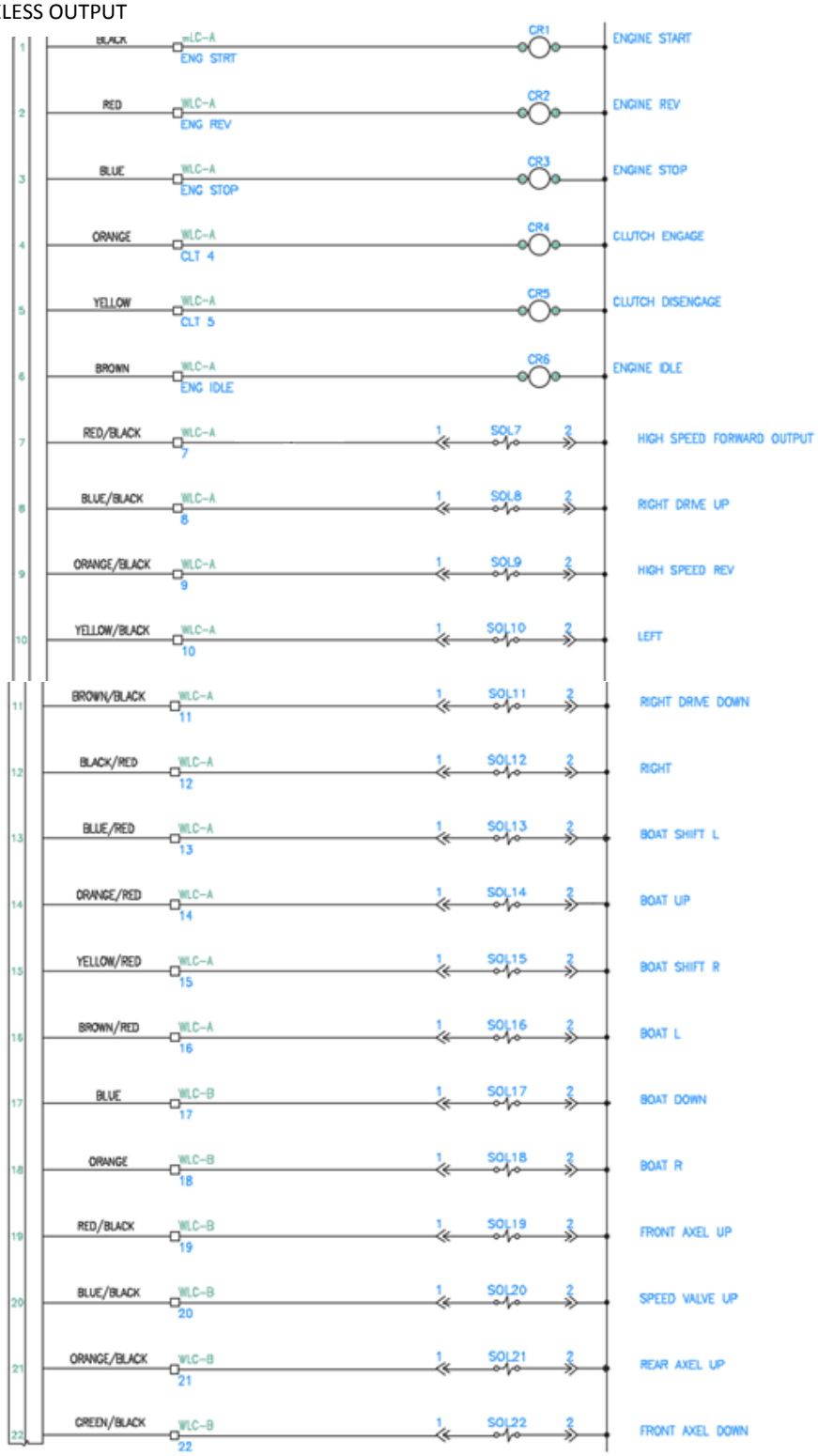

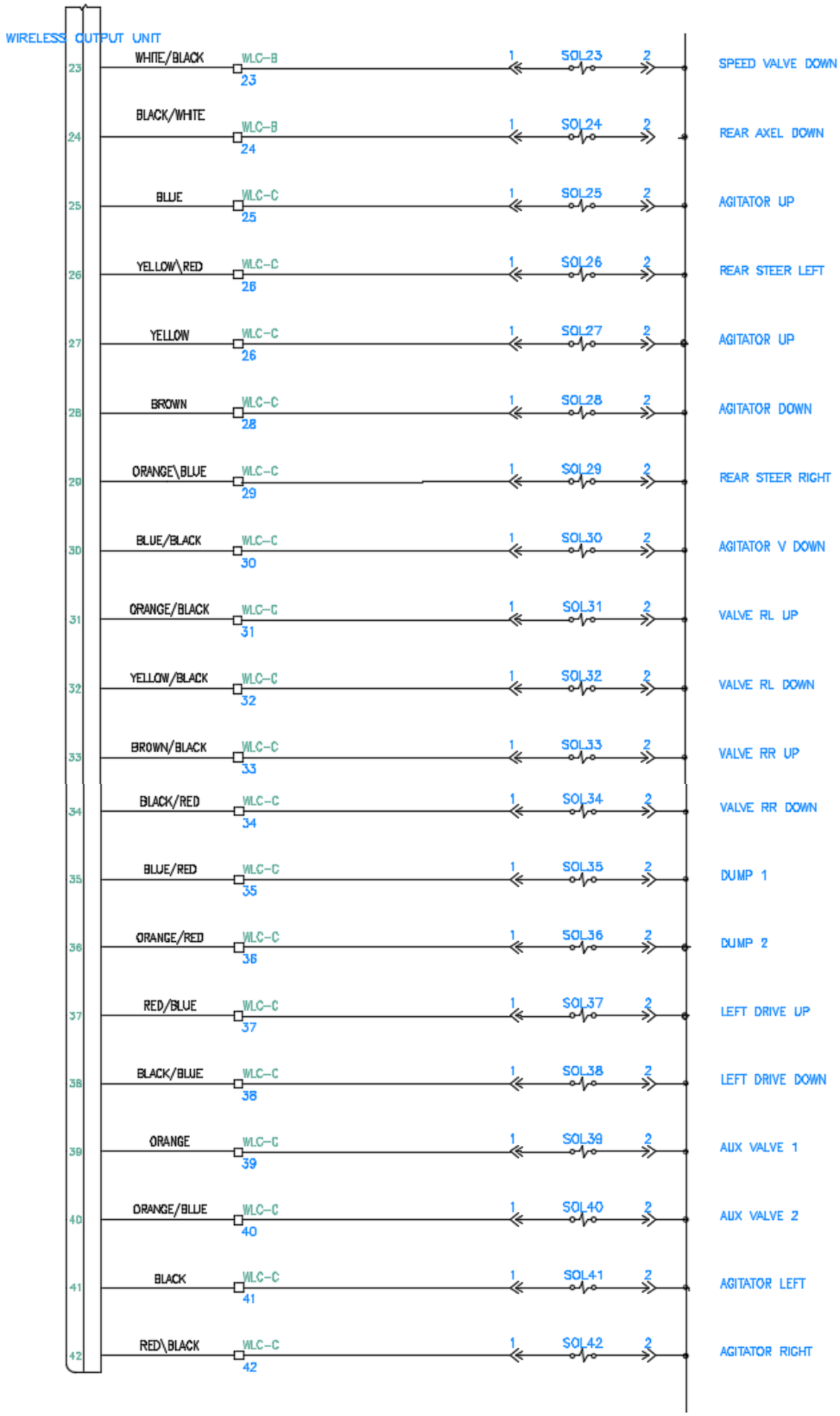

NUHN15000046431

Exhibit 2036
Bazooka v. Nuhn - IPR2024-00098
Page 23 of 35

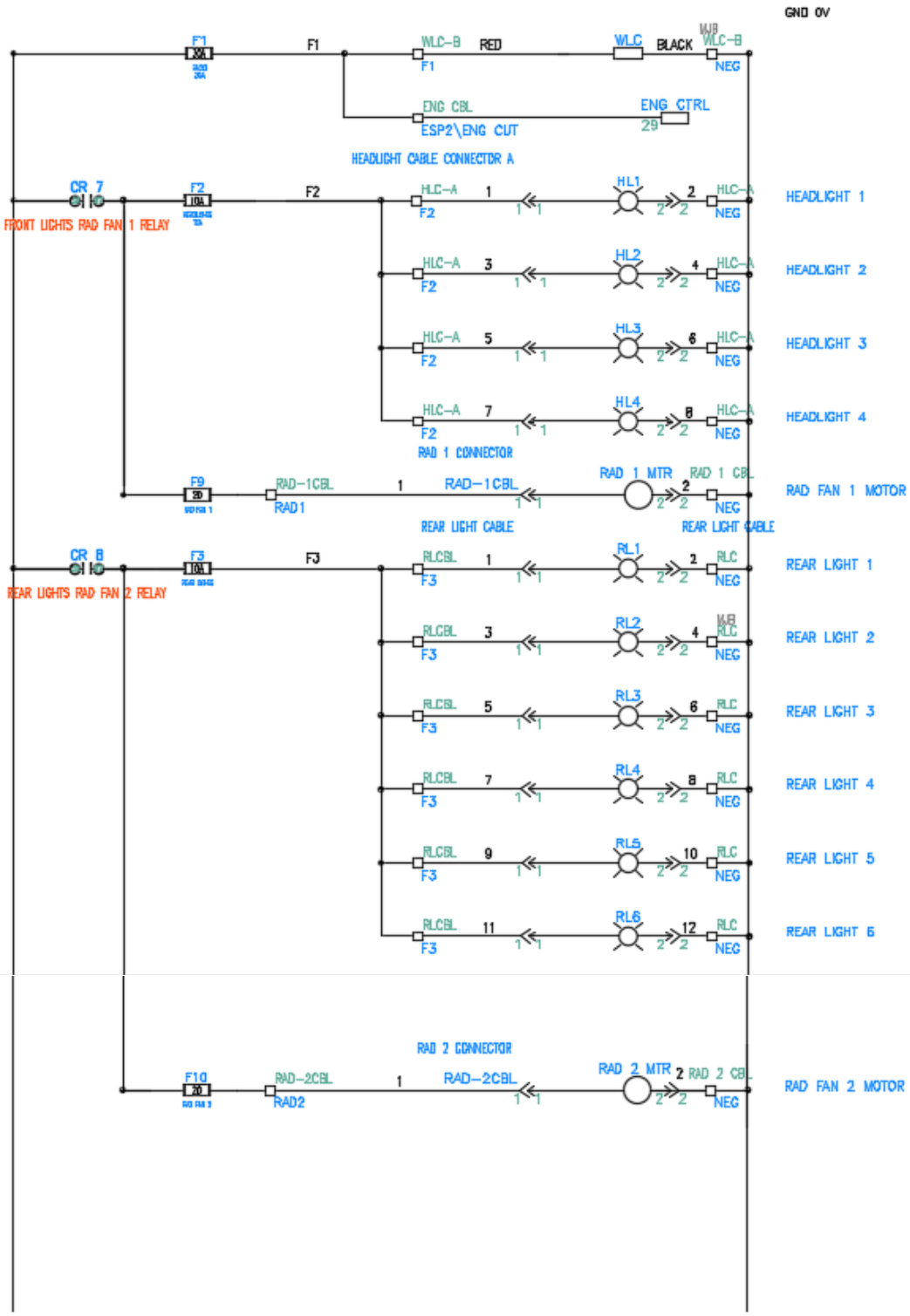

NUHN15000046432
Exhibit 2036
Bazooka v. Nuhn - IPR2024-00098
Page 24 of 35

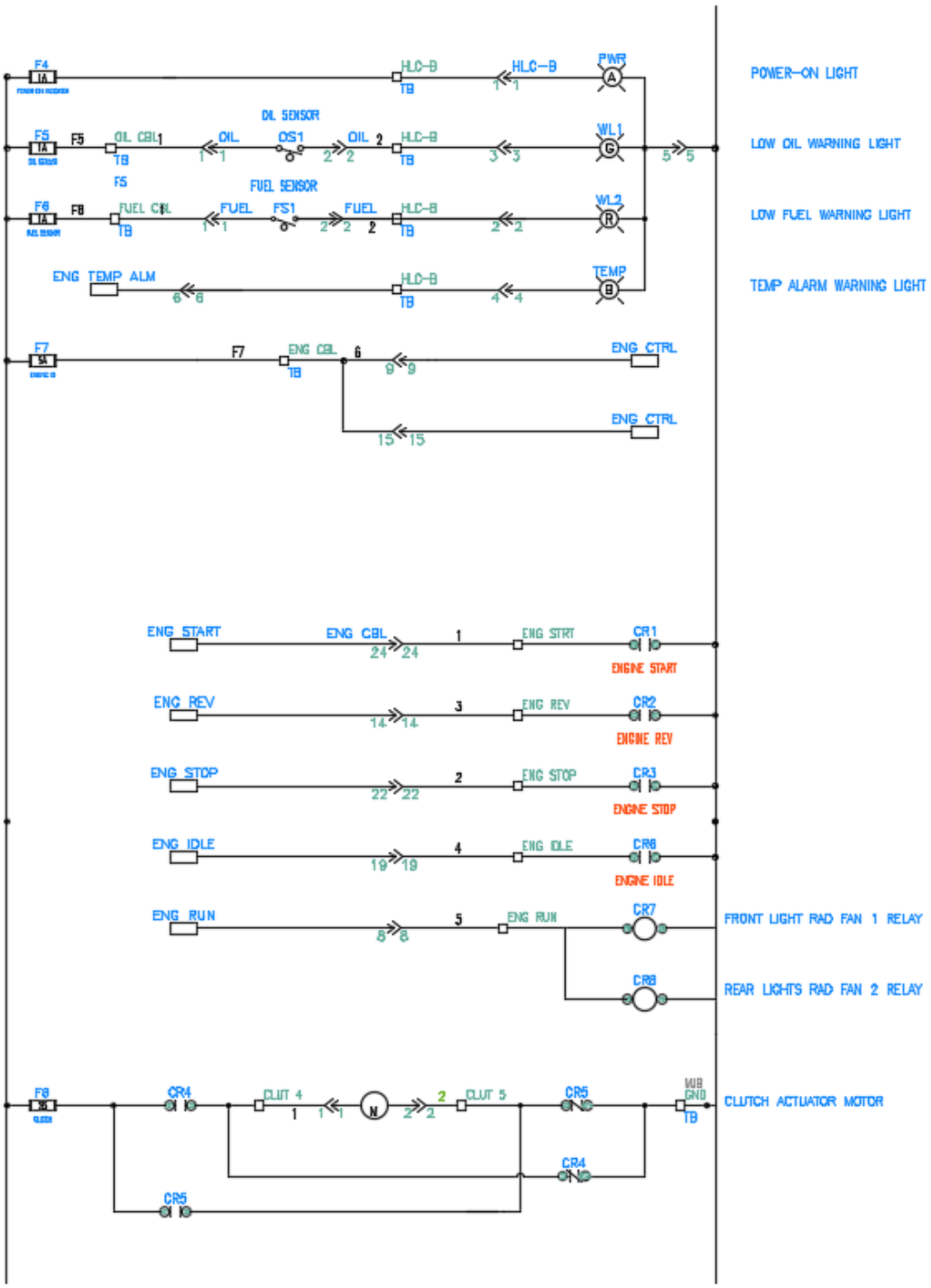
POWER-ON LIGHT
LOW OIL WARNING LIGHT
LOW FUEL WARNING LIGHT
TEMP ALARM WARNING LIGHT
OIL SENSOR
FUEL SENSOR
ENG TEMP ALM
ENG CTRL
ENG START
ENGINE START
ENG REV
ENGINE REV
ENG STOP
ENGINE STOP
ENG IDLE
ENGINE IDLE
ENG RUN
FRONT LIGHT RAD FAN 1 RELAY
REAR LIGHTS RAD FAN 2 RELAY
CLUTCH ACTUATOR MOTOR

6 HYDRAULIC SCHEMATICS

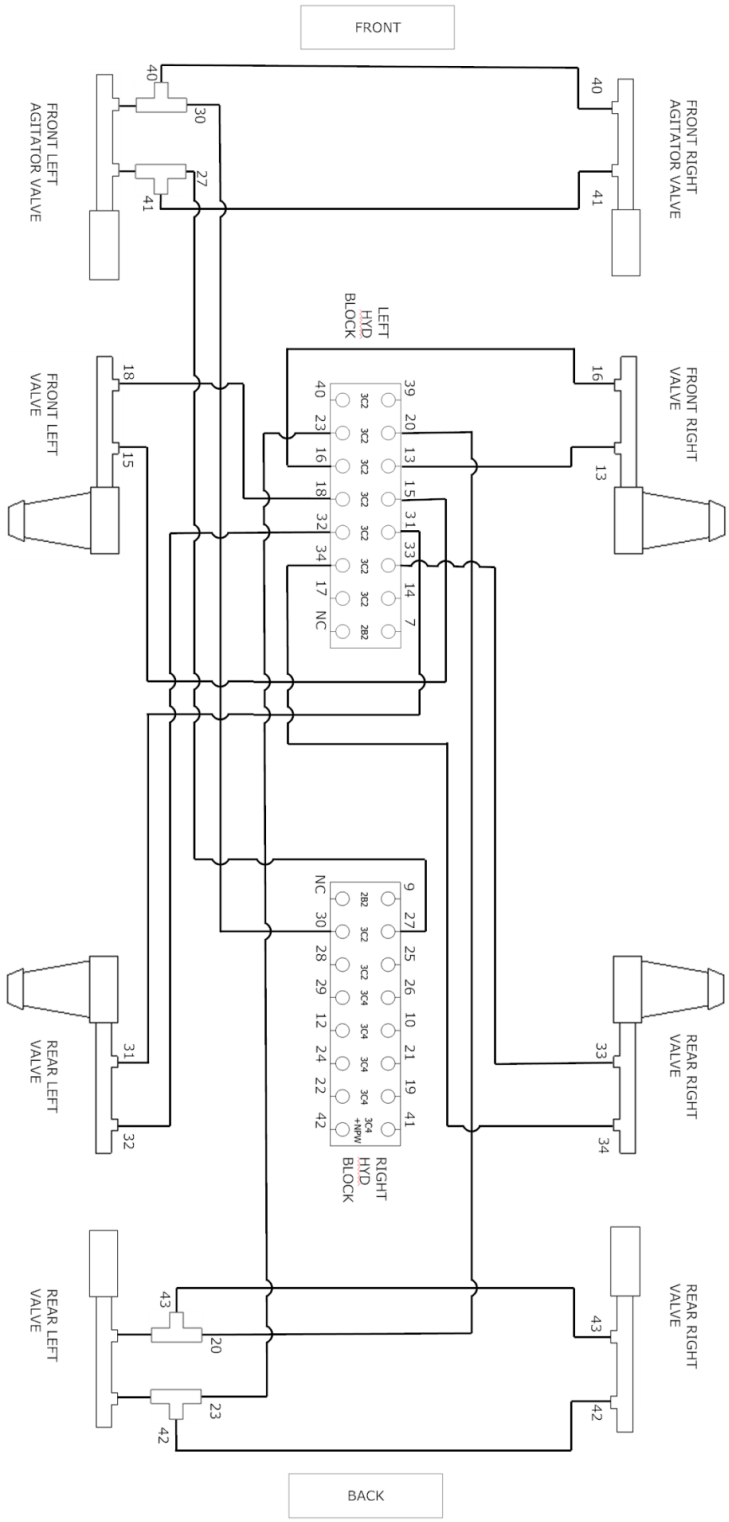

NUHN15000046434

Exhibit 2036
Bazooka v. Nuhn - IPR2024-00098
Page 26 of 35

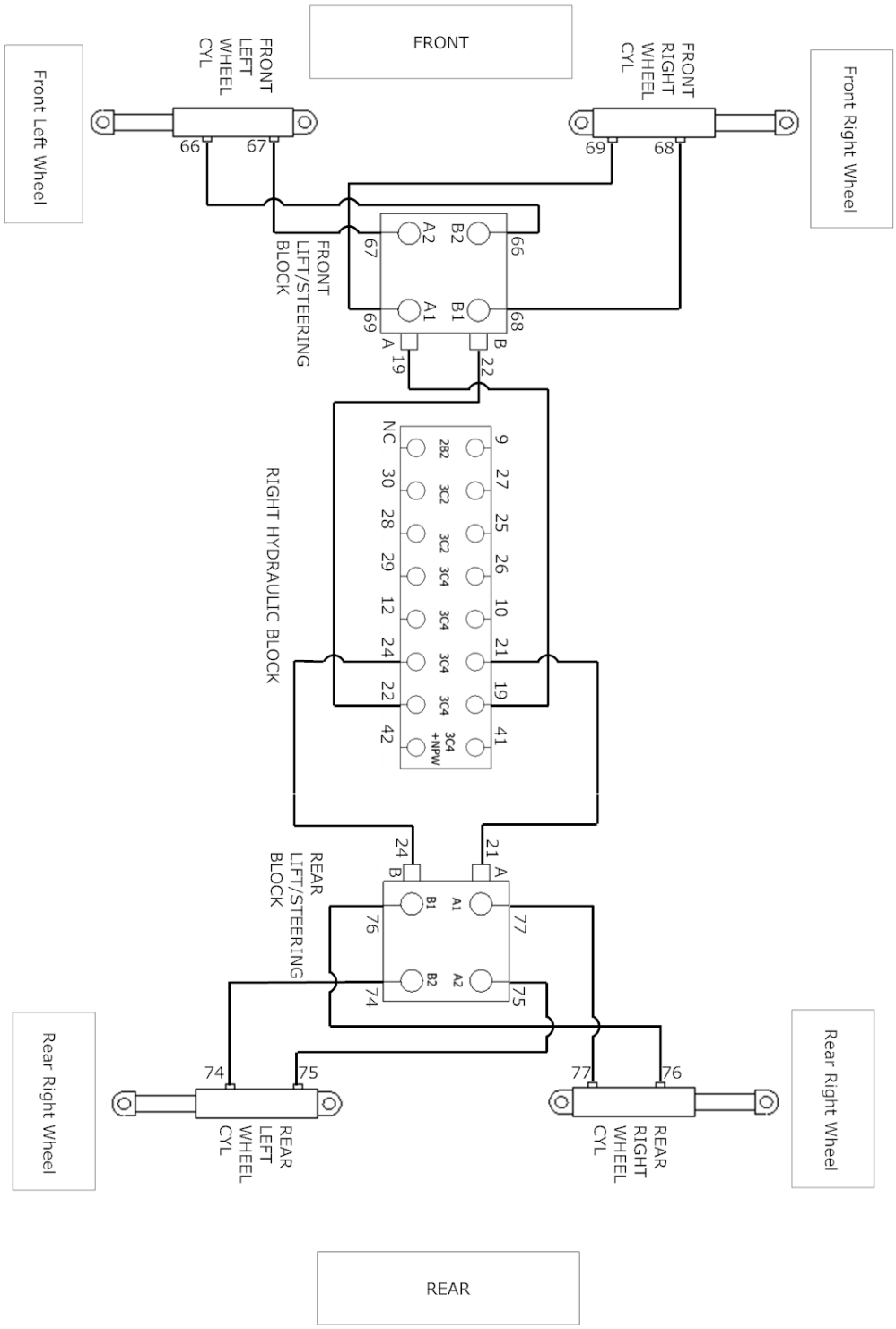
Front Right Wheel
FRONT RIGHT WHEEL CYL
69
68
FRONT
Front Left Wheel
FRONT LEFT WHEEL CYL
66
67
FRONT LIFT/STEERING BLOCK
A2
B2
A1
B1
A
B
19
22
RIGHT HYDRAULIC BLOCK
NC
2B2
3C2
3C4
+NPW
REAR LIFT/STEERING BLOCK
Rear Right Wheel
REAR RIGHT WHEEL CYL
REAR LEFT WHEEL CYL
REAR

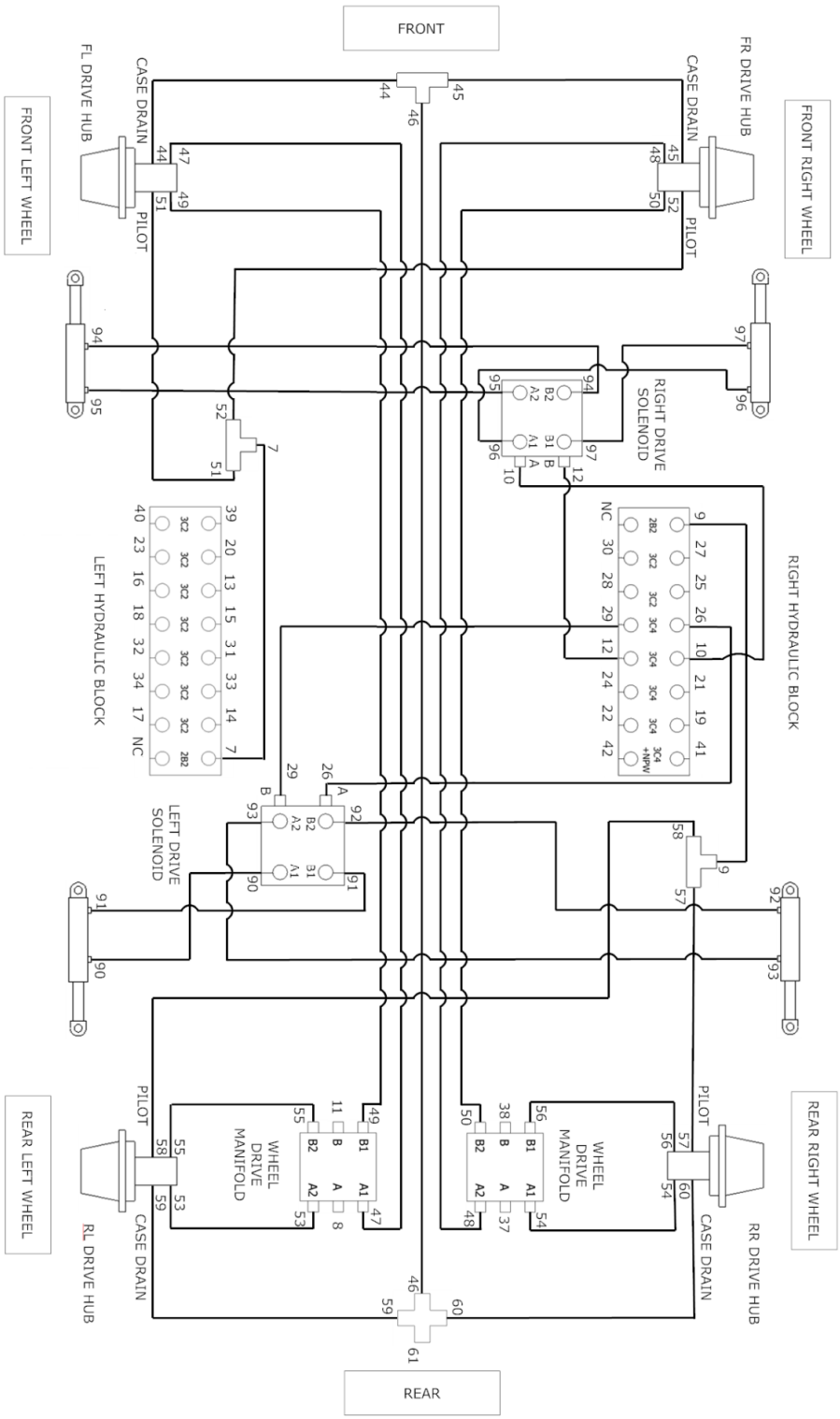

NUHN15000046436
Exhibit 2036
Bazooka v. Nuhn - IPR2024-00098
Page 28 of 35

7 TROUBLESHOOTING

7.1 CRAWLER BREAKDOWN IN A LAGOON

Warning!

In the unlikely event that the Crawler breaks down while agitating a lagoon, DO NOT enter a lagoon without adequate safety equipment. Life preservers and breathing apparatus should be worn. Contact your local fire department for recommended equipment.

If there is a mechanical failure on the pump driveline that causes loss of pump power, the Crawler can be driven out using the tires to bring itself back to shore. Use the 'Fast Drive' mode to use the tires to slowly propel the Crawler to shore. Tire steering will steer the Crawler.

7.1.1 RUNNING OUT OF FUEL

After the fuel tanks are filled, use the plunger pump on the fuel filter to clear the fuel lines of air. You will need to pump it until there is resistance.

NUHN15000046437

Exhibit 2036
Bazooka v. Nuhn - IPR2024-00098
Page 29 of 35

8 WARRANTY

8.1 NUHN WARRANTY

The warranty described in this section is provided by Nuhn Industries to the original Purchasers of Products purchased from Nuhn Industries or the Dealer. Under this warranty, Nuhn Industries will repair or replace, at its option, any part covered under this warranty which is found to be defective in material or workmanship under normal use and service during the applicable Warranty Term. Nuhn Industries' obligations under this warranty are limited to repairing or replacing as the company may elect, free of charge, and without charge for installation, any parts that prove, in the company's opinion, to be defective in workmanship and material within 1 year, or 1,000 hours of use after delivery to the original purchaser, and still owned by the original purchaser.

The Product carries a structural warranty of one year, or 1,000 hours of use. The Warranty Term begins on the date of delivery of the Products to the Purchaser. It is a condition of this warranty that the original purchaser must fill out and return the warranty sheet provided by Nuhn Industries immediately. In the event that the owner's sheet has not been returned to Nuhn Industries, the warranty is void.

It is a condition of this warranty that within the aforesaid period of time (one year or 1,000 hours) the equipment, product or parts as alleged to be defective by the original purchaser are to be returned to Nuhn Industries either directly or through a dealer/distributer of Nuhn Industries, with transportation prepaid, or this warranty shall be of no effect and shall be waived by the purchaser. The Purchaser shall be responsible for any service call or transportation of Products to and from the authorized dealer's place of business, or for any service or maintenance not directly related to any defect covered under this warranty. If Nuhn Industries shall find that such returned parts are defective and that such defects are included in and covered by said warranty, then such defective parts shall promptly be replaced without charge to the purchaser, FOB Nuhn Industries.

8.2 NO IMPLIED WARRANTY, REPRESENTATION OF CONDITION

The foregoing warranty shall constitute Nuhn Industries' sole liability and the Purchaser's sole remedy and is in lieu of all other warranties and conditions written or verbal, statutory, express or implied. To the extent permitted by law, fundamental terms, representations, promises, conditions and warranties, express or implied, including implied or statutory conditions or warranties, of merchantability and fitness, quality, performance, freedom from defect, are excluded. The Dealer has no authority to make any representation or promise on behalf of Nuhn Industries or to modify the terms or limitations of this warranty in any way.

8.3 WARRANTY NOT COVERED BY NUHN

Pursuant to the terms of this warranty, Nuhn Industries is not responsible for the following:

i. Used Products;
ii. Tires, which are warranted under separate warranty documents provided by the manufacturer of such tires;
iii. Engines, which are warranted under separate warranty documents provided by the manufacturer of such engines (see owner's manual);
iv. Any products that have been altered or modified in ways not approved by Nuhn Industries;
v. Replacement parts for items subject to excessive wear;
vi. Depreciation or damage caused by normal wear, lack of reasonable and proper maintenance, failure to follow operating instructions or recommendations, misuse, lack of proper protection during storage, vandalism, the elements or collision or accident; or
vii. Normal maintenance parts and/or service.

NUHN15000046439

Exhibit 2036
Bazooka v. Nuhn - IPR2024-00098
Page 31 of 35

9 LIABILITY

The Dealer, Nuhn Industries, their officers, directors, agents and servants and their affiliates and their respective officers, directors, agents and servants shall not be liable to the Purchaser nor to any other party for any liability, including, without limitation, strict liability, including liability for loss or damages, whether direct, indirect, special, incidental, consequential, punitive or aggravated, whether in contract, tort or otherwise, due to occurrences or consequences arising out of or related to the manufacture, sale, delivery, resale, repair, replacement or use of the Products or part thereof, whether or not supplied pursuant to this Agreement, except as specifically provided in the warranty provisions herein.

The Dealer, Nuhn Industries, their officers, directors, agents and servants and their affiliates and their respective officers, directors, agents and servants shall not be liable for any injuries, loss of profits, rental of substitute equipment, other commercial or personal loss or damages arising as a result of a fundamental breach or breach of a fundamental term of this Agreement by the Purchaser.

The Purchaser acknowledges and agrees that they are solely responsible for reasonably and properly operating, maintaining, repairing and servicing the Products in accordance with all manuals, warning decals, manufacturer's operating instructions and recommendations, as well as all state, provincial and local statutes, rules and regulations. The Purchaser acknowledges that a failure to do so may result in injuries, damage to property, loss of profits and other commercial or personal loss, together with the cancellation of any warranty coverage provided for herein.

A Nuhn Lagoon Crawler should only be operated by trained professionals. Contact your local Nuhn dealer to obtain training. By operating this Lagoon Crawler, you are acknowledging that you have been trained in the operation of this equipment. The operator understands that this is not a passenger or riding vehicle. Be mindful of surrounding people and property.

Manure gases can cause injury or death. Never enter a lagoon riding on the Crawler as such actions can result in serious injury or death.

Never attempt to enter a lagoon pit for any reason.

Do not leave the Crawler unattended. This is not a toy.

The operator must operate this product in accordance with all surrounding conditions. The following are the complete responsibility of the owner / operator:

- Damage to the equipment
- Harm to the environment
- Damage to the lagoon liner (of any material)
- Harm to property or possessions
- Harm to people or animals

Nuhn Industries will not be responsible for failure to maintain adequate fuel levels, resulting in the Crawler requiring retrieval from a lagoon. Pay attention to fuel consumption rates and operation time to better gauge when the Crawler will need to refuel.

NUHN15000046440

Exhibit 2036
Bazooka v. Nuhn - IPR2024-00098
Page 32 of 35

GENERAL

(1) *Extended Meanings*: Words importing the singular number include the plural and vice versa and words importing gender include all genders.

(2) This contract shall be construed and governed according to the laws of Ontario and Canada.

(3) *Severability*: The invalidity or unenforceability of any provision of this agreement shall not affect the validity or enforceability of any other provision hereof.

(4) *Waiver*: No waiver, alteration or modification of these provisions shall be binding upon Nuhn unless made in writing and signed by a duly authorized representative of Nuhn.

NUHN15000046441

Exhibit 2036
Bazooka v. Nuhn - IPR2024-00098
Page 33 of 35

10 NOTES

Lagoon Crawler Serial No.	
Engine Manufacturer	
Engine Serial No.	

NUHN15000046442

Exhibit 2036
Bazooka v. Nuhn - IPR2024-00098
Page 34 of 35

11 WARRANTY CARD

THIS WARRANTY CARD MUST BE FULLY COMPLETED AND RETURNED TO NUHN INDUSTRIES LTD.

Nuhn Industries Ltd
PO Box 160, 4816 Line 34
Sebringville, Ontario, N0K 1X0
Fax: 1-519-393-5104
Email: nuhnind@nuhn.ca

Date: _____ / _____ / _____ (MM DD YY) Delivery Date: _____ / _____ / _____ (MM DD YY)

Model: _____ Serial No: _____

Owner / Purchaser: _____

Address: _____

City: _____ State: _____ Zip: _____

Phone No: _____

Dealership: _____

Address: _____

City: _____ State: _____ Zip: _____

Phone No: _____

I hereby acknowledge:

1. That I have read, understand and accept the nature, extent, limitations, and exclusions of the manufacturer's warranty and liability statements.

2. That I have received no other representations or warranties, either express or implied from Nuhn Industries Ltd., the Dealership or any other person.

3. That I have read and understand the Operator's / Safety Manual.

4. That I have received instruction regarding maintenance, operational procedure, and safety function for this equipment.

5. That I and / or any employees are qualified to operate this equipment following the instructions we have received and guidance from the Operator's / Safety Manual.

_____ Dealer Signature

_____ Owner Signature

NUHN15000046443

Exhibit 2036
Bazooka v. Nuhn - IPR2024-00098
Page 35 of 35