NUHN

LAGOON CRAWLER

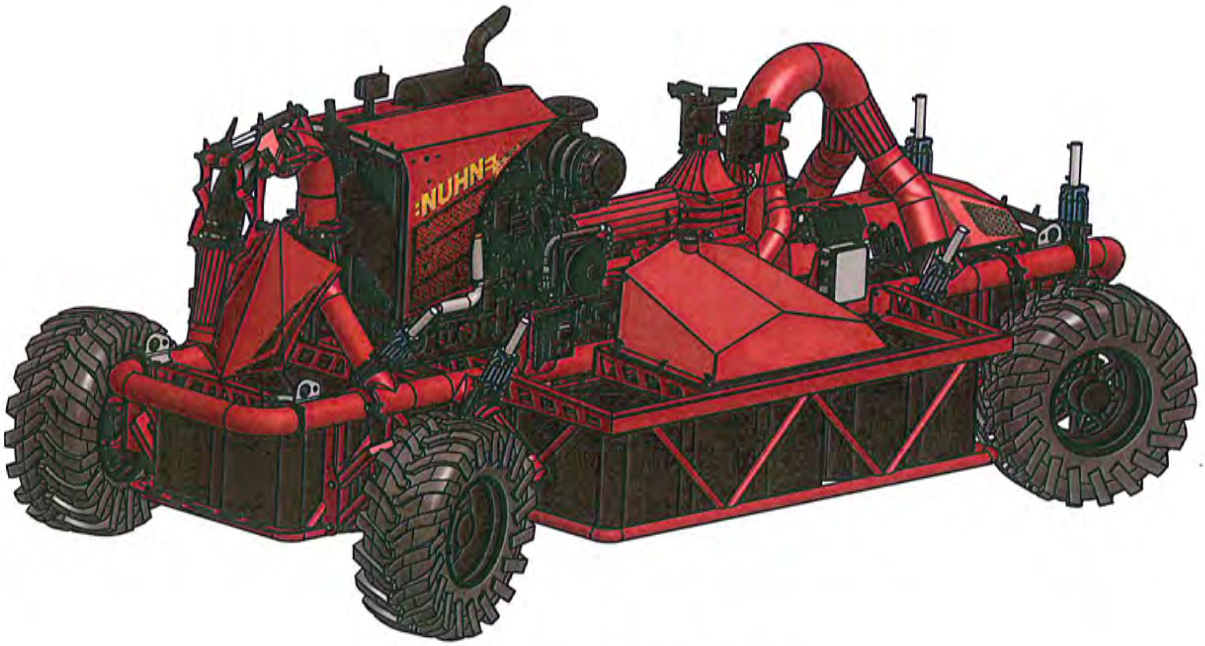

Parts Catalogue

Revision 1

PO Box 160, 4816 Line 34
Sebringville, Ontario, Canada
N0K 1X0

Toll Free: (877) 837-7323
Phone: (519) 393-6284
Fax: (519) 393-5104
Email: nuhnind@nuhn.ca
Website: www.nuhn.ca

Table of Contents

Hardware Cataloguing 1

Notes 2

Crawler – Pontoon Main Frame with Floats 3

Crawler – Front Lift and Steer Manifold Schematics 4

Crawler – Side Assembly Right 9

Crawler – Side Assembly Left 10

Crawler – Fuel Tank Complete Right 11

Crawler – Fuel Tank Complete Left 12

Crawler – Float Side Saddle Assembly 13

Crawler – Engine – Cummins Control Panel 14

Crawler – Control Box for Receiver – 2015 Model 15

Crawler – A-Arm Assembly 16

Crawler – Side Nozzle Assembly 20

Crawler – Rear Two Nozzle Assembly 21

Crawler – Main Frame Assembly Front 23

Crawler Option – Rotating Agitator Left and Right 24

Crawler – Main Frame Assembly Rear 29

Crawler – Hydraulic Oil Tank Complete 31

Crawler – Hydraulic Drive Solenoid System 32

Crawler – Hydraulic Solenoid Right Assembly 33

Crawler – Hydraulic Solenoid Left Assembly 34

Crawler – Drive Solenoid Assembly 35

Crawler – Main Frame Assembly 36

Crawler – Engine – Complete Assembly 38

Crawler – High Pressure Filter Assembly with Bracket 40

Crawler – Gear Oil Cooler Assembly 41

Crawler – Hydraulic Oil Cooler Assembly 42
Crawler – Belt Tensioner Assembly 43
Crawler – Belt Tensioner Kit 44
Crawler – Horizontal Drive Line 45
Crawler – PTO Shield 46
Crawler – Horizontal Drive Shaft Assembly – 1710 Series 47
Crawler – Pump Module 48
Crawler – Cast Housing Upgrade Kit 52
Crawler – Gear Box Assembly 53
Crawler – Gear Box – T-332A 54
Mech-TC Seal and Bearing System – 2.25'' Complete 55
Crawler – Battery Box Assembly 56
Crawler – Giga Remote with Charger 57
Crawler Option – Front Bumper 8'' Discharge 58

Hardware Cataloguing

Bolts

Regular (Imperial)	Bolt – Hex Head – 0.375" x 2" – GR5
Regular (Metric)	Bolt – Hex Head – M14 x 40 - 8.8
Socket Head (Imperial)	Bolt – Socket Head – 0.375" x 2" – GR5
Socket Head (Metric) – Zinc Finish	Bolt – Socket Head – M14 x 40 - 8.8 Black Oxide
Serrated Hex Flange (Imperial)	Bolt – Hex Flange – 0.5'' x 1.5'' – GR5 Serrated

Washers

Regular (Imperial – USS)	Washer – Flat – 0.875"
Regular (Imperial – GR8)	Washer – Flat – 0.875" – GR8
Regular (Metric)	Washer – Flat – M14
Lock (Imperial)	Washer – Lock – 0.875"
Lock (Metric)	Washer – Lock – M14

Nuts

Regular (Imperial – GR2)	Nut – 0.5"
Regular (Imperial – GR5)	Nut – 0.5" – GR5
Regular (Metric)	Nut – M14
Lock (Imperial)	Nut – Nylock – 0.625"
Lock (Metric)	Nut – Nylock – M14
Serrated Hex Flange	Nut – Hex Flange – 0.5'' Serrated

Hydraulic Adaptors

Straight Adaptor	Hyd. Adaptor – Straight – *SIZE*
Elbow Adaptor	Hyd. Adaptor – 45° Elbow – *SIZE*
Tee Adaptor	Hyd. Adaptor - Tee - *SIZE*
Cross Adaptor	Hyd. Adaptor - Cross - *SIZE*
Crimp	Hyd. Adaptor - Crimp - *SIZE*

Male O-Ring Boss	MOR
Male O-Ring Seal	MORS
Male JIC Thread	MJ
Male NPT Thread	MP
Male BSPP Thread	MBSPP
Female O-Ring	FOR
Female O-Ring Seal	FORS
Female O-Ring Seal Swivel	FORSX
Female JIC Thread Swivel	FJX
Female NPT Thread	FP
Female NPT Thread Swivel	FPX
Female WEO Plug-In Coupling	FWEO
Hose Barb	BARB

Hydraulic Cylinders

Welded	Hyd. Cylinder – Welded – 2.5" x 12"

NUHN15000049992

Exhibit 2037
Bazooka v. Nuhn - IPR2024-00098
Page 4 of 61

Notes:

-Hose lengths are measured from the end of one fitting to end of the other fitting

-Naming scheme follows the pattern of general to detailed

-Price book is based on 2015 Crawler version; the price and parts of any earlier version may vary

NUHN15000049993

Exhibit 2037
Bazooka v. Nuhn - IPR2024-00098
Page 5 of 61

Crawler - Pontoon Main Frame with Floats	100-768

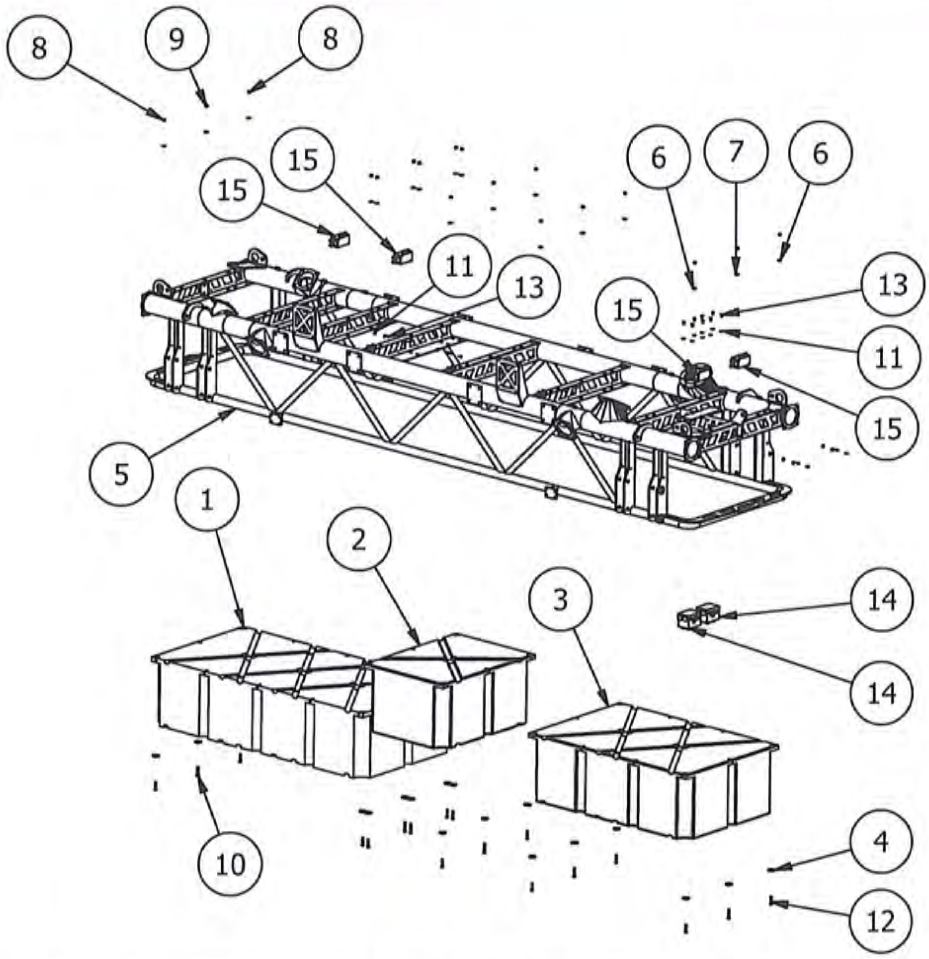

PARTS LIST

ITEM	QTY	PART NUMBER	TITLE
1	1	100-769	Crawler - Float - 48" x 96" x 24"
2	1	100-770	Crawler - Float - 36" x 48" x 24"
3	1	100-782	Crawler - Float - 48" x 72" x 24"
4	18	100-845	Crawler - Float Washer 2.25"OD x 0.625"ID x 0.25"
5	1	100-887	Crawler - Main Frame
6	12	100-897	Washer - Flat - 0.4375"
7	6	100-898	Washer - Flat - 0.5"
8	12	100-903	Nut - Nylock - 0.4375"
9	6	100-904	Nut - Nylock - 0.5"
10	6	100-980	Bolt - Hex Head - 0.5" x 3" - GR5
11	16	101-020	Washer - Flat - 0.3125"
12	12	101-048	Bolt - Hex Head - 0.4375" x 2.5" - GR5
13	16	103-144	Bolt - Hex Head - 0.3125" x 0.75" - GR5
14	2	104-634	Crawler - Wheel Drive Manifold Assembly
15	4	104-635	Crawler - Axle Lift and Steer Manifold Assembly

Crawler - Front Lift and Steer Manifold Schematics

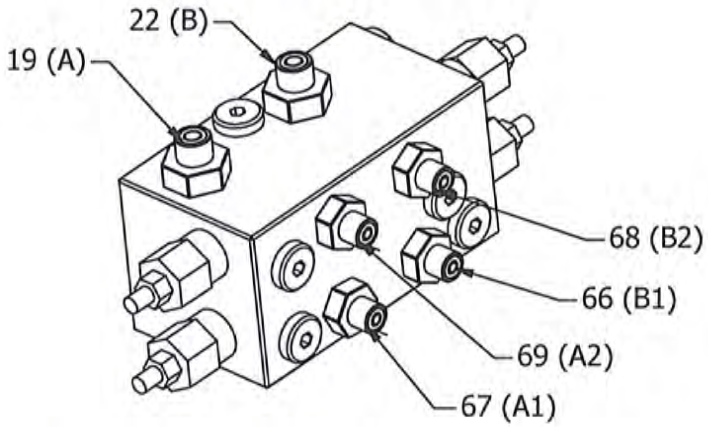

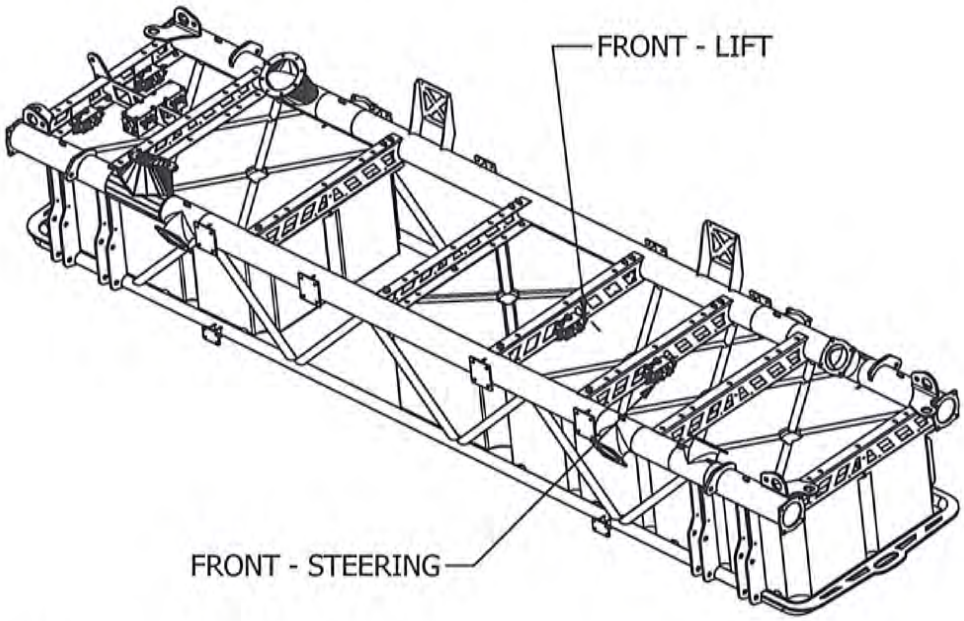

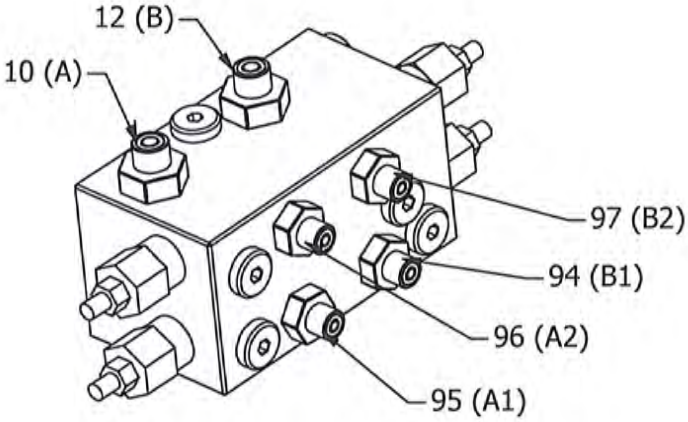

NUHN15000049995

Crawler - Rear Lift and Steer Manifold Schematics

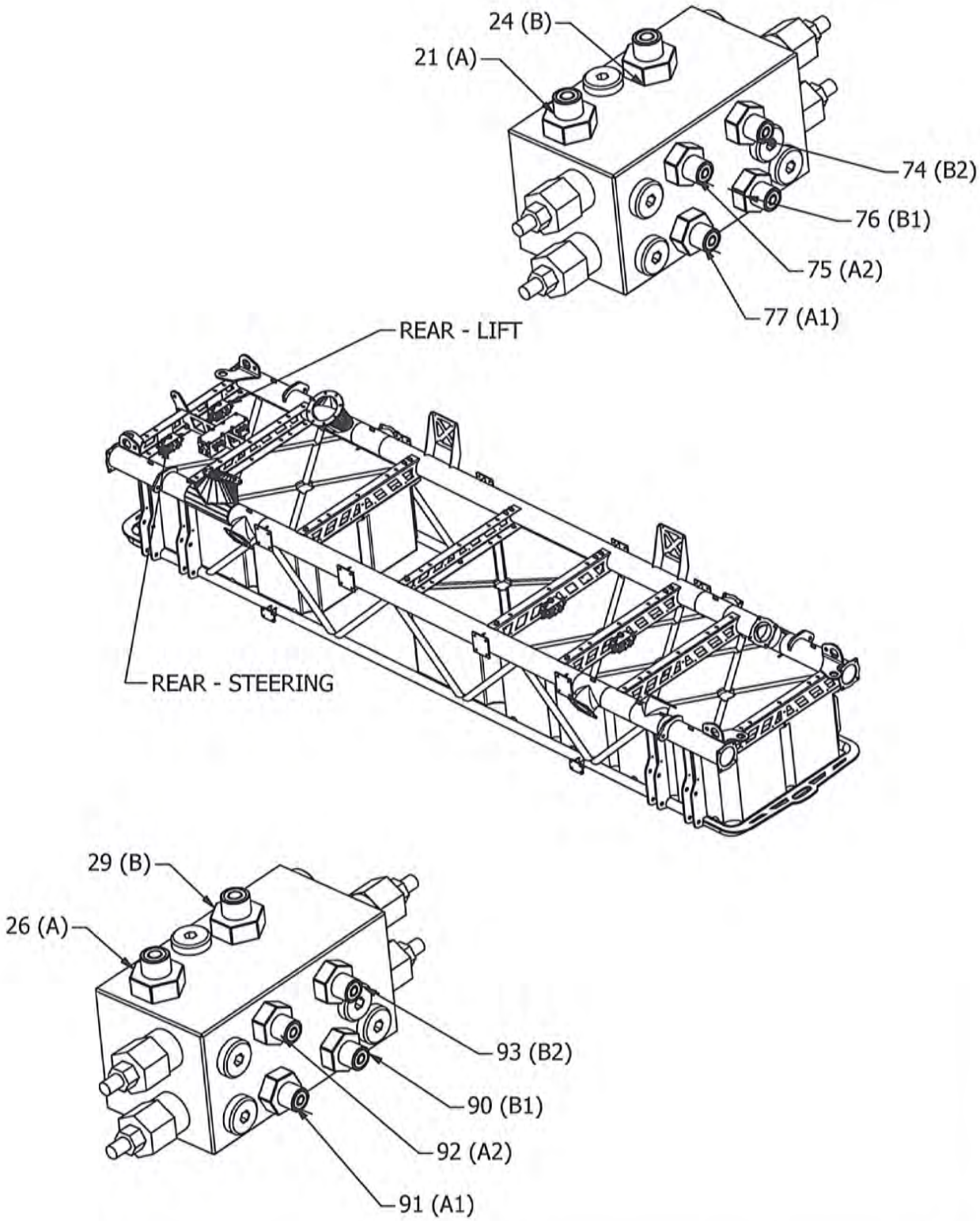

Crawler - Wheel Drive Manifold Schematics

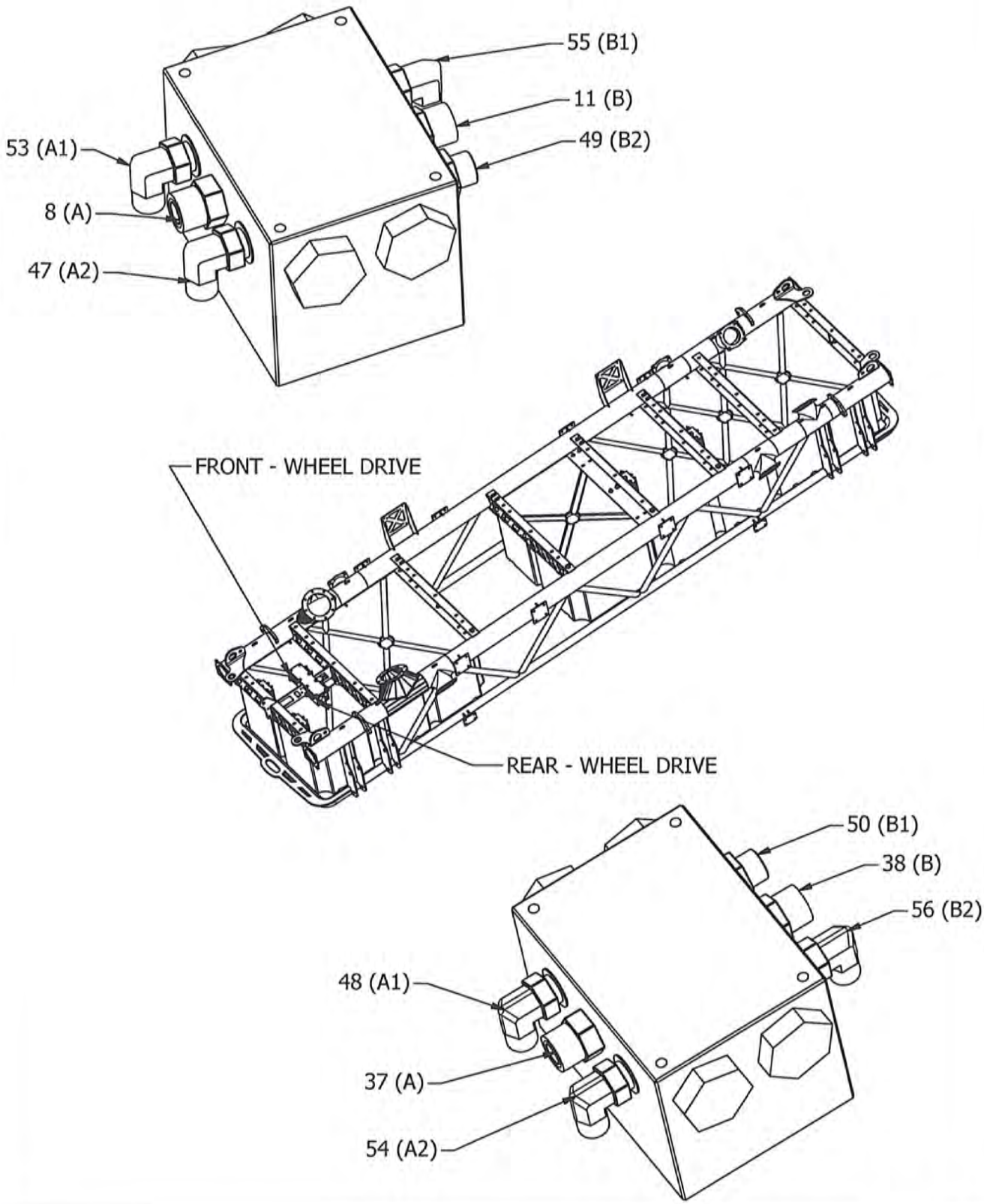

Crawler - Wheel Drive Manifold Assembly	104-634	

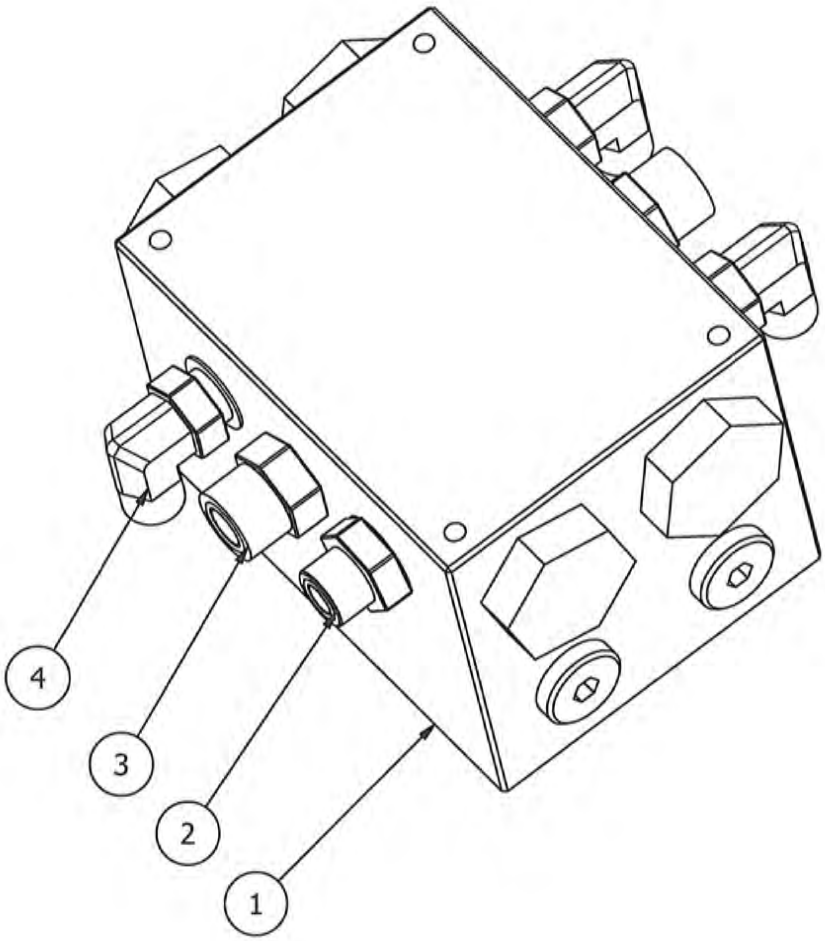

PARTS LIST

ITEM	QTY	PART NUMBER	TITLE
1	1	104-234	Crawler - Wheel Drive Manifold CX-77
2	1	104-457	Hyd. Adapter - Straight - #8 MORS x #8 MOR
3	2	104-460	Hyd. Adapter - Straight - #10 MORS x #10 MOR
4	3	104-522	Hyd. Adapter - 90° Elbow - #8 MORS x #8 MOR

Crawler - Lift and Steer Manifold Assembly	104-635	

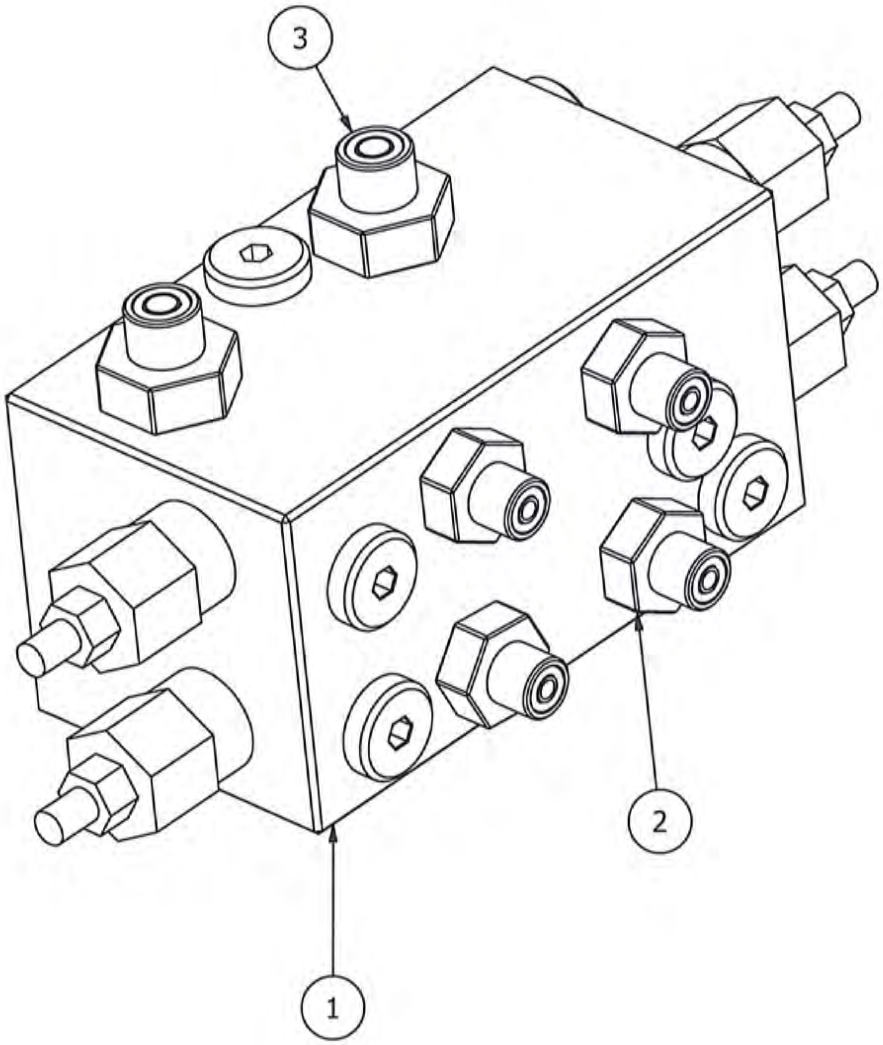

PARTS LIST

ITEM	QTY	PART NUMBER	TITLE
1	1	104-233	Crawler - Lift and Steer Block Manifold CX-75
2	4	104-455	Hyd. Adapter - Straight - #4 MORS x #8 MOR
3	2	104-456	Hyd. Adapter - Straight - #6 MORS x #10 MOR

Crawler - Side Assembly Right

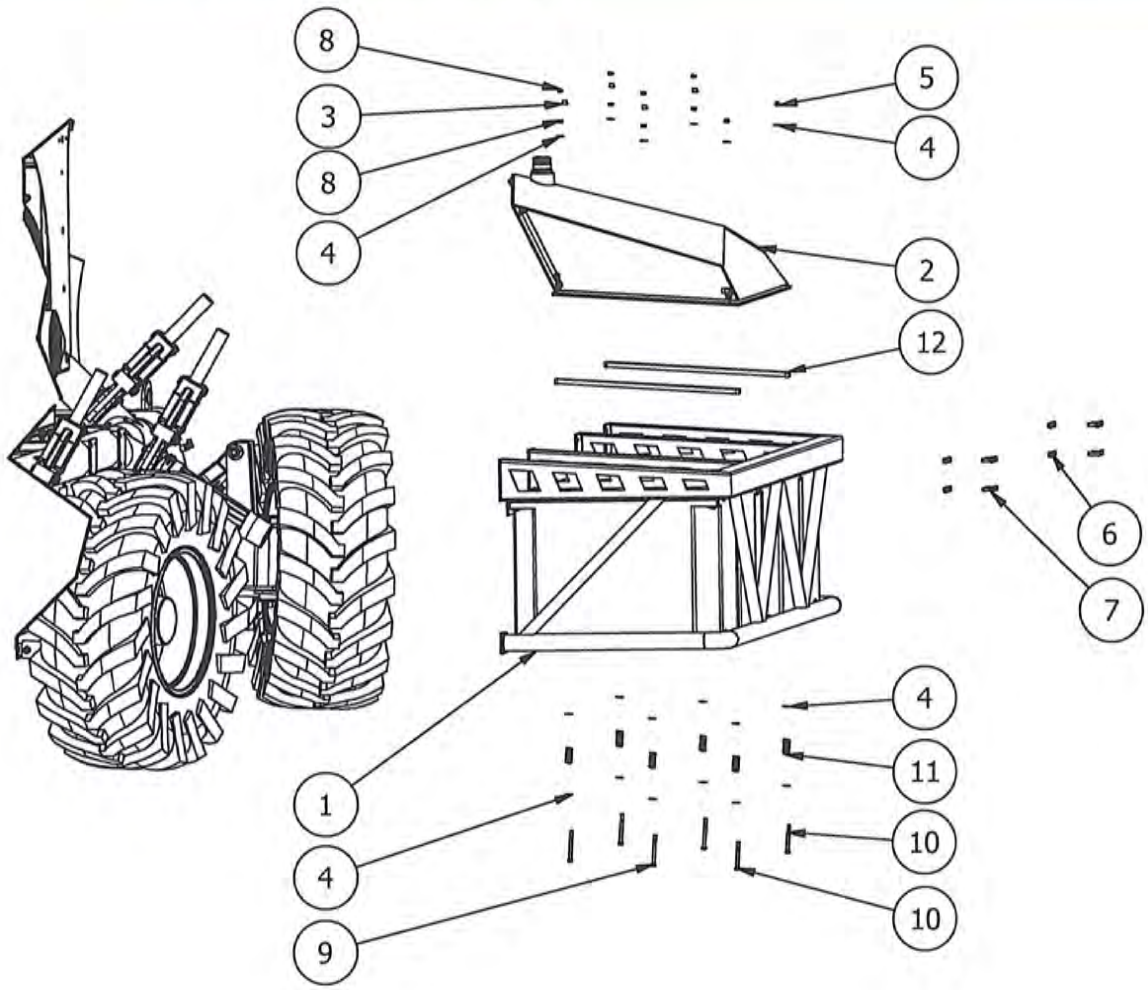

PARTS LIST

ITEM	QTY	PART NUMBER	TITLE
1	1	100-771	Crawler - Float Side Saddle Assembly
2	1	100-783	Crawler - Fuel Tank Complete Right
3	4	100-803	Crawler - Tectran Frame Clamp 0.625"
4	66	100-897	Washer - Flat - 0.4375"
5	48	100-903	Nut - Nylock - 0.4375"
6	54	100-904	Nut - Nylock - 0.5"
7	38	100-914	Bolt - Hex Head - 0.5" x 1.5" - GR5
8	16	101-016	Nut - 0.4375" - GRA
9	8	101-050	Bolt - Hex Head - 0.4375" x 5" - GR5
10	8	101-192	Bolt - Hex Head - 0.4375" x 4.5" - GR5
11	10	104-214	Crawler - Compression Spring - #40 - 0.75"OD x 3.5"
12	4	104-598	Crawler - Rubber - Fuel Tank - 32.5" x 2.63"

Crawler - Side Assembly Left

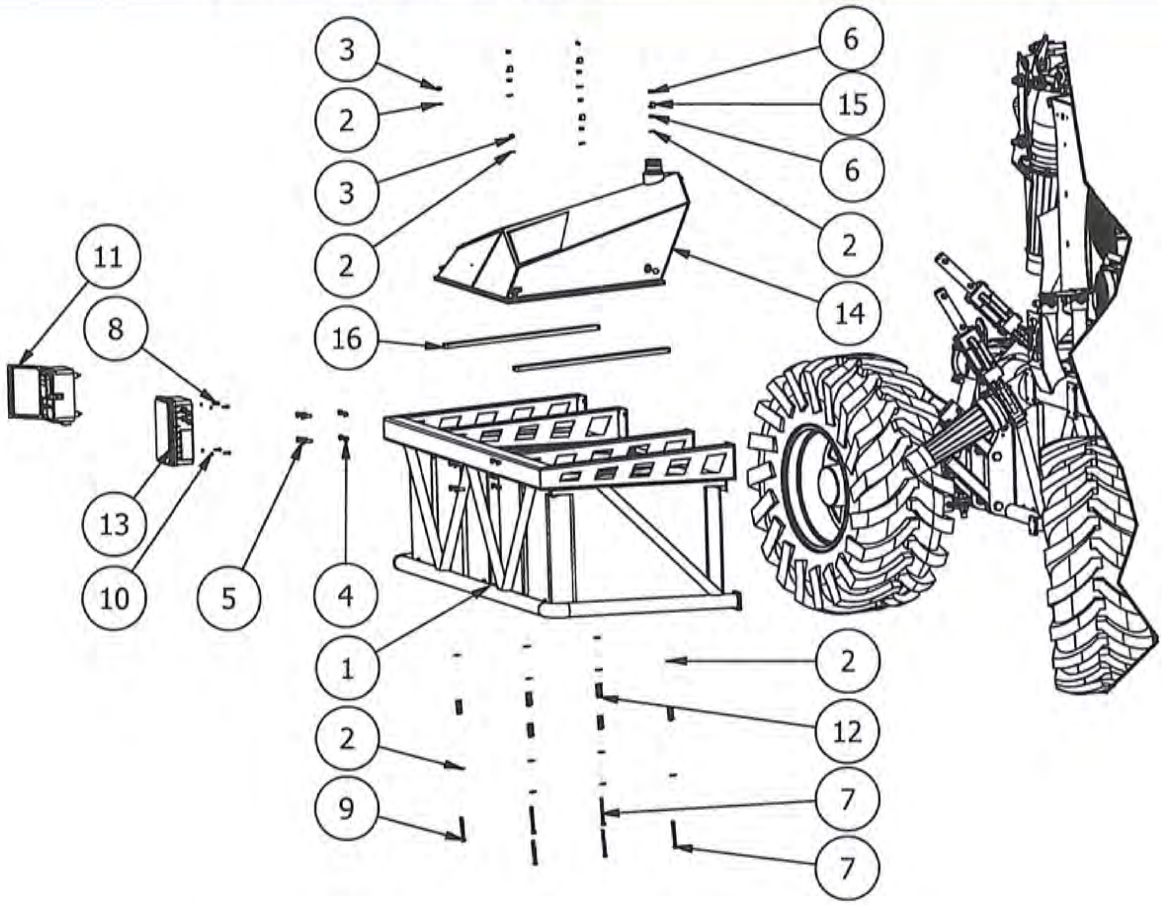

PARTS LIST

ITEM	QTY	PART NUMBER	TITLE
1	2	100-771	Crawler - Float Side Saddle Assembly
2	66	100-897	Washer - Flat - 0.4375"
3	48	100-903	Nut - Nylock - 0.4375"
4	54	100-904	Nut - Nylock - 0.5"
5	38	100-914	Bolt - Hex Head - 0.5" x 1.5" - GR5
6	16	101-016	Nut - 0.4375" - GRA
7	8	101-050	Bolt - Hex Head - 0.4375" x 5" - GR5
8	12	101-058	Bolt - Hex Head - 0.25" x 1" - GR5
9	8	101-192	Bolt - Hex Head - 0.4375" x 4.5" - GR5
10	4	103-145	Washer - Lock - 0.25"
11	1	103-990	Crawler - Engine - Cummins Control Panel
12	10	104-214	Crawler - Compression Spring - #40 - 0.75"OD x 3.5"
13	1	104-249	Crawler - Control Box for Receiver
14	1	104-524	Crawler - Fuel Tank Complete Left
15	4	104-548	Crawler - Tectran Frame Clamp 1"
16	4	104-598	Crawler - Rubber - Fuel Tank - 32.5" x 2.63"

Crawler - Fuel Tank Complete Right	100-783

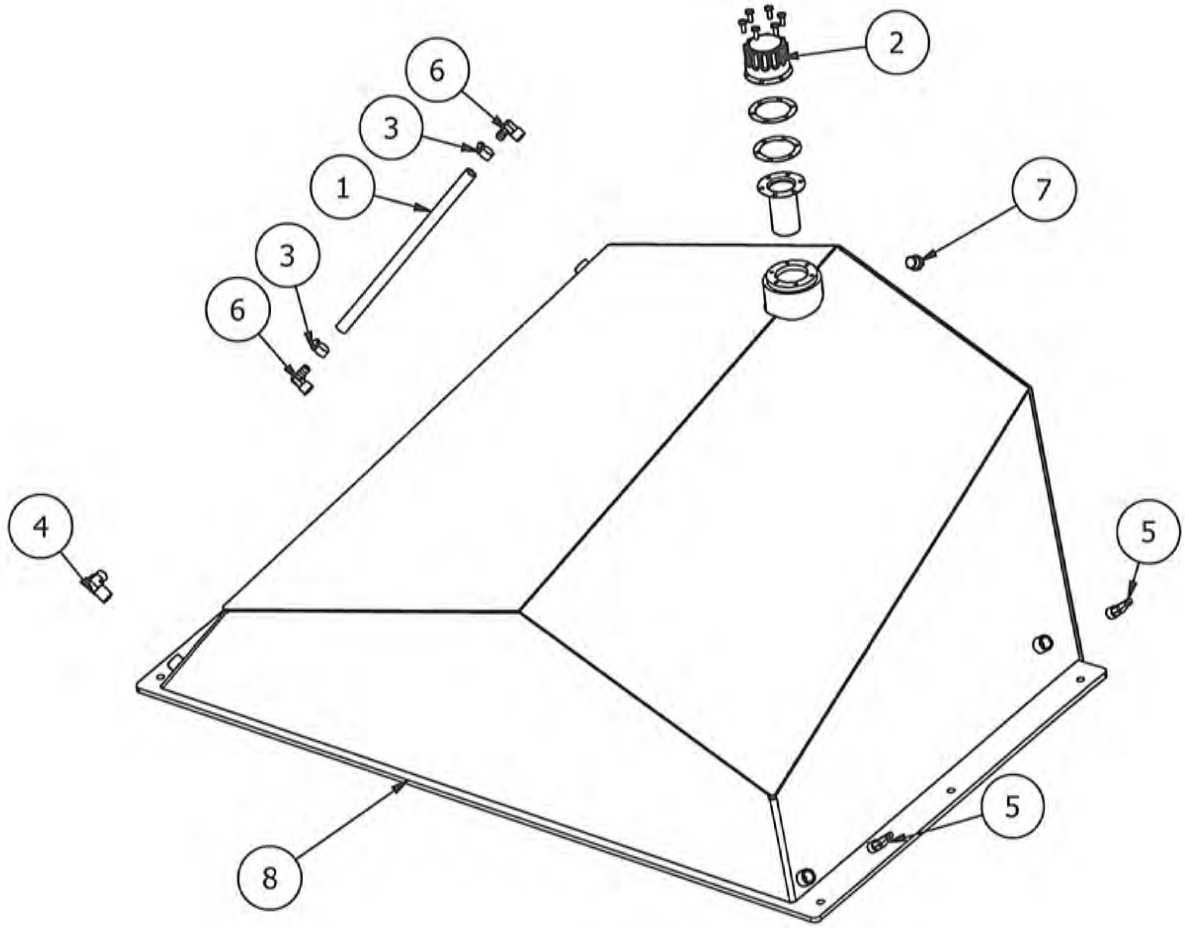

PARTS LIST

ITEM	QTY	PART NUMBER	TITLE
1	1	102-752x1.3	Hose - Water - 0.5 PVC - Steel Wire Reinforcement - 15.25"lg
2	1	103-977	Crawler - Fuel Cap - Filler Breather
3	2	104-370	Hose Clamp - 0.4375 Gear Clamp #8 SS
4	1	104-452	Hyd. Adaptor - 90° Elbow - #8 MP x #8 MORS
5	2	104-468	Hyd. Adaptor - 90° Elbow - #6 BARB x #6 MP - Brass
6	2	104-470	Hyd. Adaptor - 90° Elbow - #8 BARB x #8 MP - Brass
7	1	104-523	Pipe - Plug - 0.5" Hex Head
8	1	104-525	Crawler - Fuel Tank

Crawler - Fuel Tank Complete Left	104-524

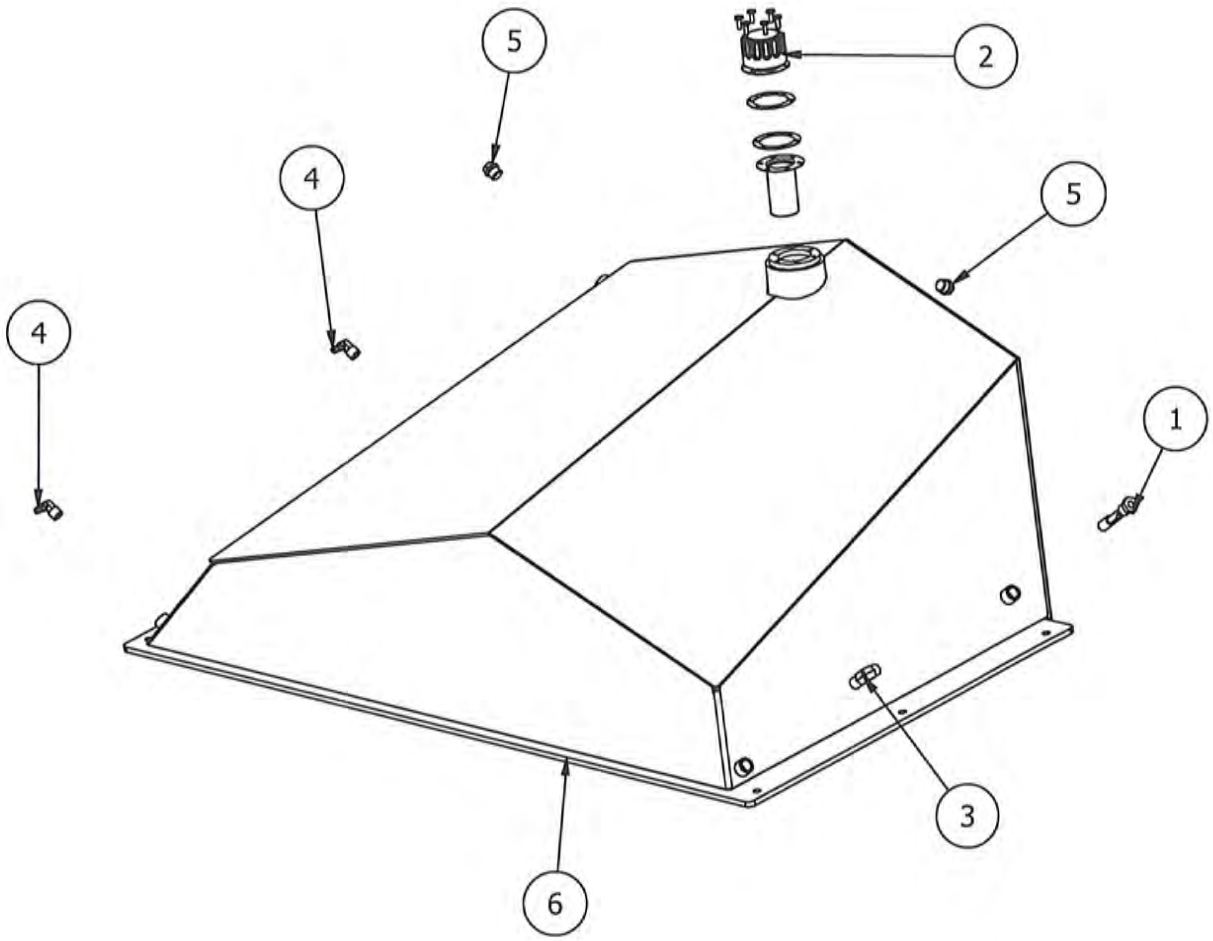

PARTS LIST

ITEM	QTY	PART NUMBER	TITLE
1	1	103-976	Crawler - Fuel Level Switch
2	1	103-977	Crawler - Fuel Cap - Filler Breather
3	1	104-452	Hyd. Adaptor - 90° Elbow - #8 MP x #8 MORS
4	2	104-468	Hyd. Adaptor - 90° Elbow - #6 BARB x #6 MP - Brass
5	2	104-523	Pipe - Plug - 0.5" Hex Head
6	1	104-525	Crawler - Fuel Tank

Crawler - Float Side Saddle Assembly	100-771

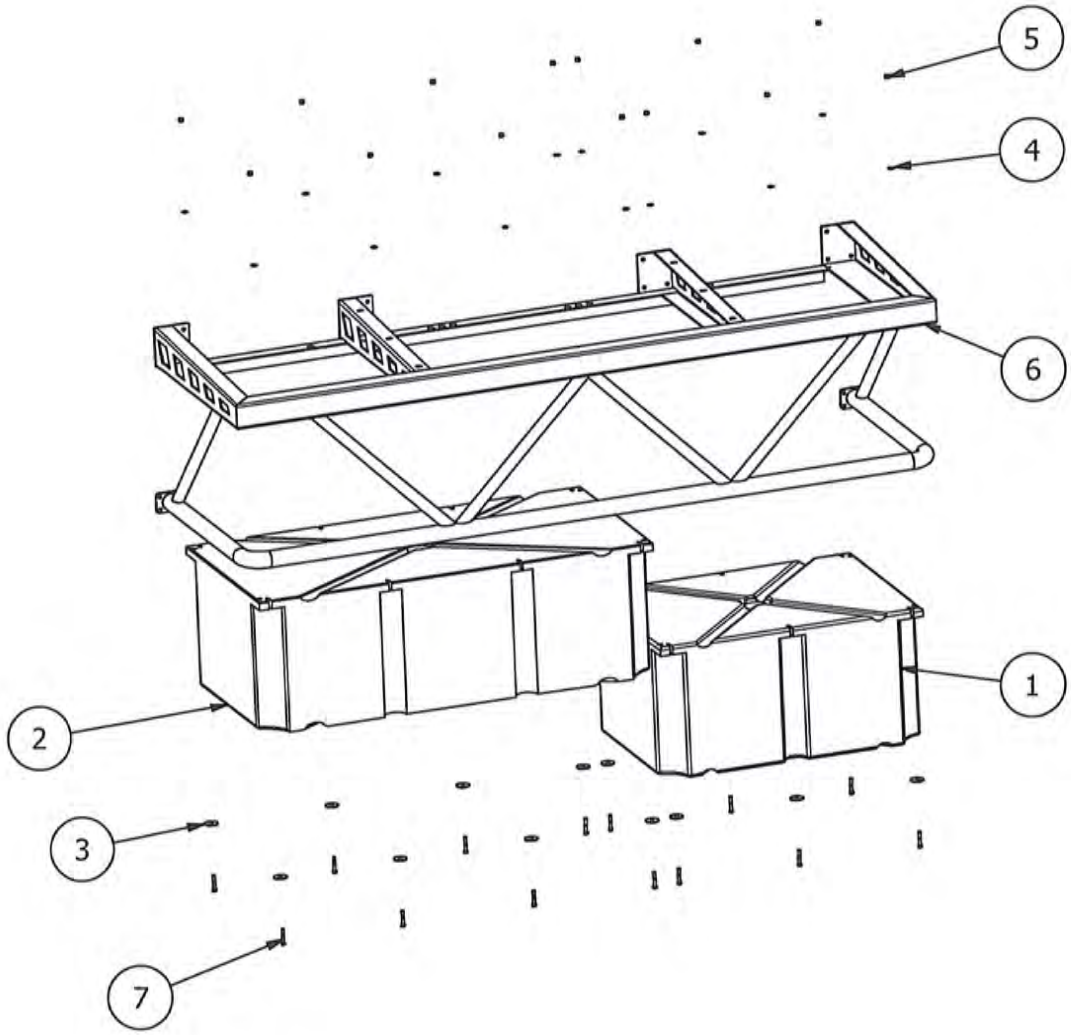

PARTS LIST

ITEM	QTY	PART NUMBER	TITLE
1	1	100-770	Crawler - Float - 36" x 48" x 24"
2	1	100-776	Crawler - Float - 36" x 72" x 24"
3	14	100-845	Crawler - Float Washer 2.25"OD x 0.625"ID x 0.25"
4	14	100-897	Washer - Flat - 0.4375"
5	14	100-903	Nut - Nylock - 0.4375"
6	1	100-922	Crawler - Side Saddle Frame
7	14	101-048	Bolt - Hex Head - 0.4375" x 2.5" - GR5

Crawler - Engine - Cummins Control Panel	103-990	

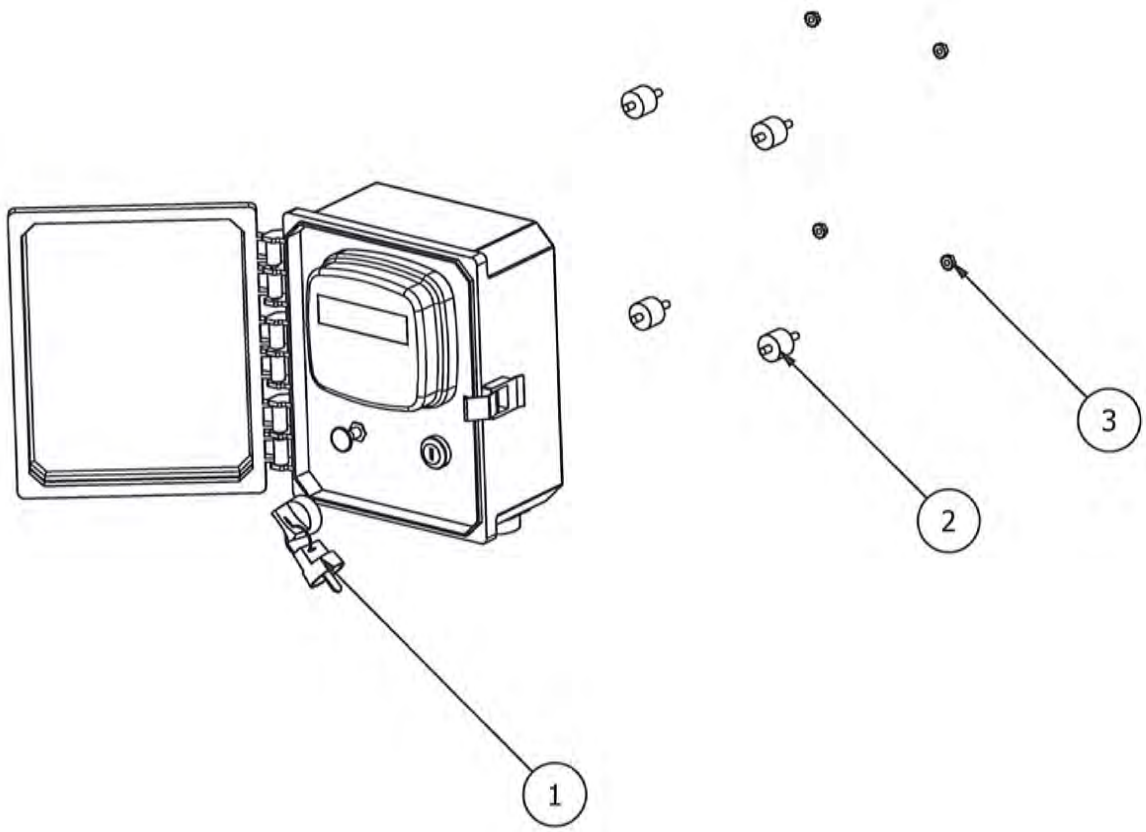

REPLACEMENT PARTS LIST

ITEM	QTY	PART NUMBER	TITLE
1	1	104-553	Crawler - Key Spare - Includes 2
2	4	104-651	Crawler - Anti-Vibration Mount 0.25" x 1" - Includes 4
3	4	104-652	Nut - 0.25" - GR KEPS with External Tooth Lock Washer

NUHN

Crawler - Control Box for Receiver - 2015 Model	104-249-1

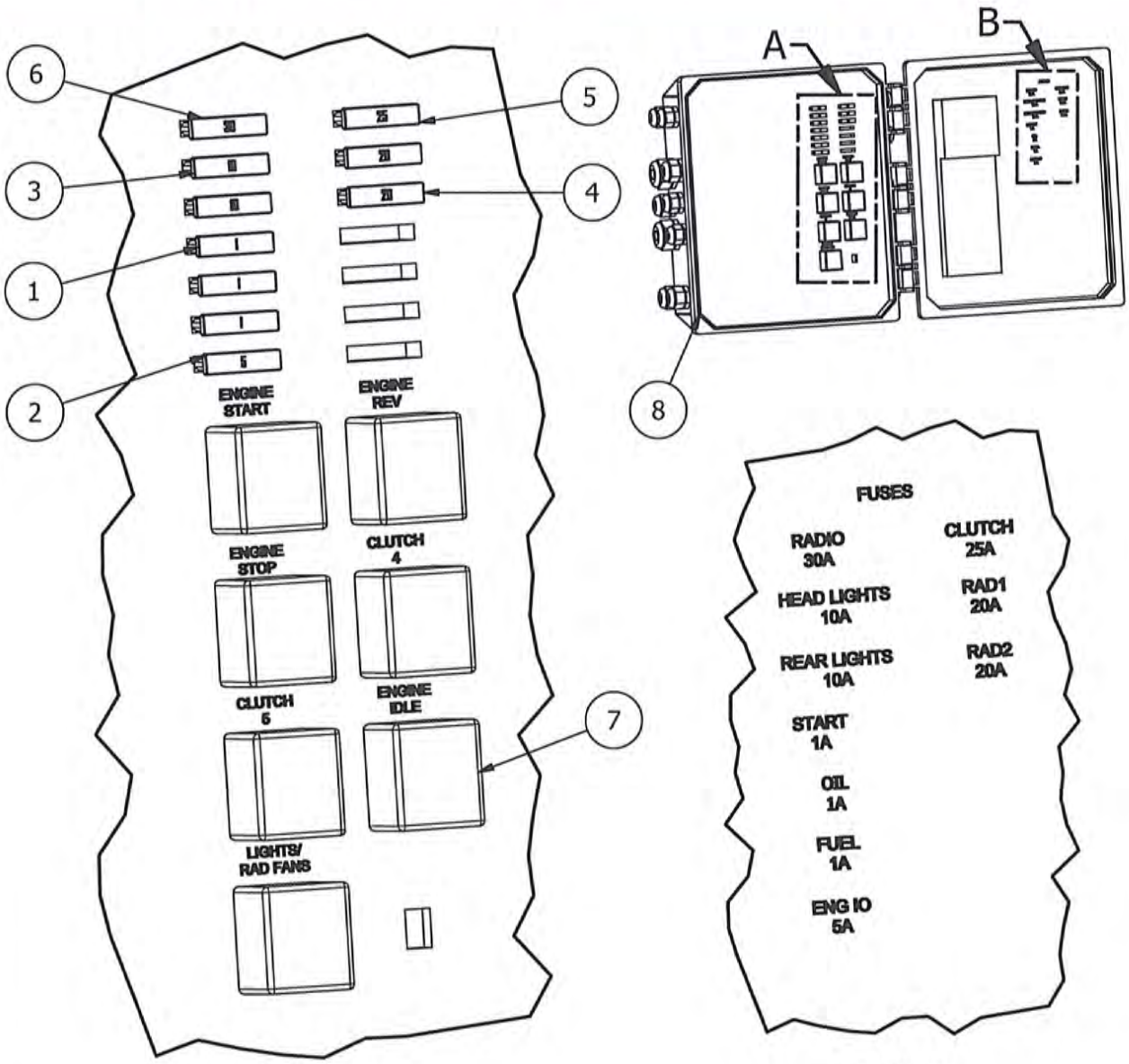

DETAIL A

DETAIL B

REPLACEMENT PARTS LIST

ITEM	QTY	PART NUMBER	TITLE
1	3	104-653	Crawler - Control Box - Fuse 1A
2	1	104-654	Crawler - Control Box - Fuse 5A
3	2	104-655	Crawler - Control Box - Fuse 10A
4	2	104-656	Crawler - Control Box - Fuse 20A
5	1	104-657	Crawler - Control Box - Fuse 25A
6	1	104-658	Crawler - Control Box - Fuse 30A
7	7	104-659	Crawler - Control Box - Sealed Relay 12V
8	1	104-894	Crawler - Aarts Control Box for Receiver - Case Only

Crawler - A-Arm Assembly

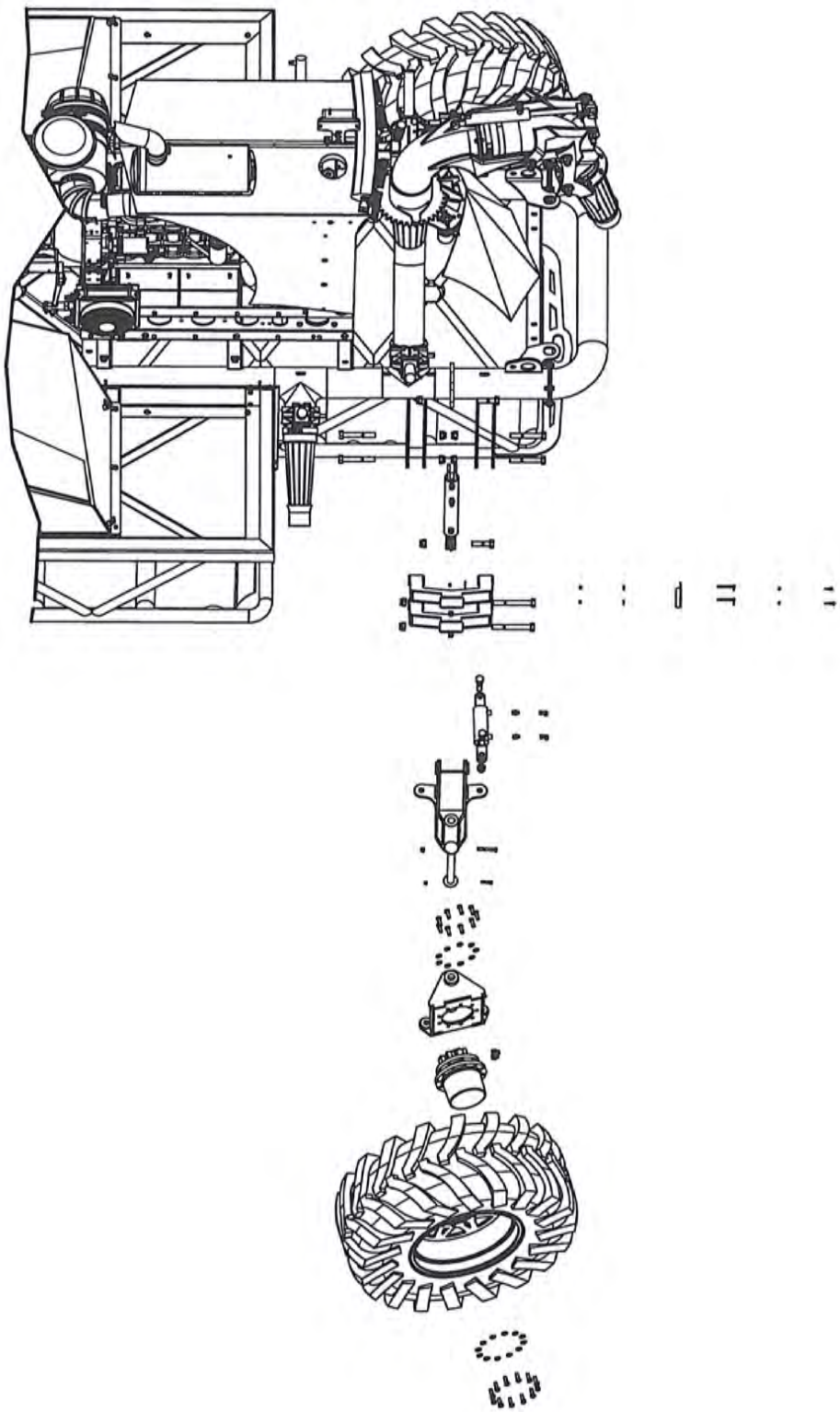

Crawler - A-Arm Assembly Detail A

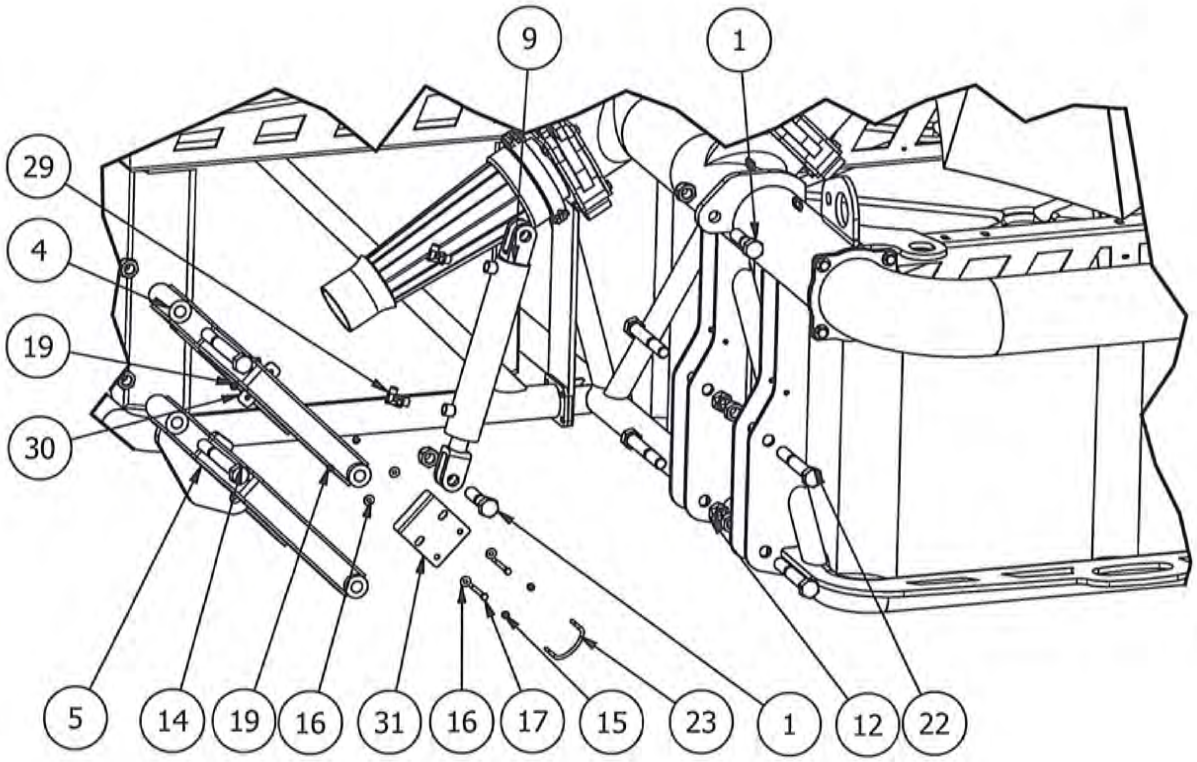

PARTS LIST

ITEM	QTY	PART NUMBER	TITLE
1	17	100-467	Bolt - Hex Head - 1" x 4" - GR5
4	4	100-777	Crawler - A-Arm Assembly
5	4	100-778	Crawler - A-Arm Assembly with Cylinder Mount
9	4	100-896	Hyd. Cylinder - Welded - 2.5" x 12"
12	42	100-907	Nut - Nylock - 1"
14	8	100-954	Bolt - Hex Head - 1" x 8.5" - GR5
15	8	101-014	Nut - 0.3125" - GR5
17	8	101-031	Bolt - Hex Head - 0.3125" x 3.5" - GR5
22	16	104-160	Bolt - Hex Head - 1" x 7" - GR5
23	4	104-226	Bolt - U - 0.3125" x 2.5"
29	8	104-465	Hyd. Adaptor - 90° Elbow - #6 MORS x #8 MOR
30	4	104-751	Crawler - A-Arm Hose Holder Back Plate
31	4	104-752	Crawler - A-Arm Hose Holder Front Plate

Crawler - A-Arm Assembly Detail B

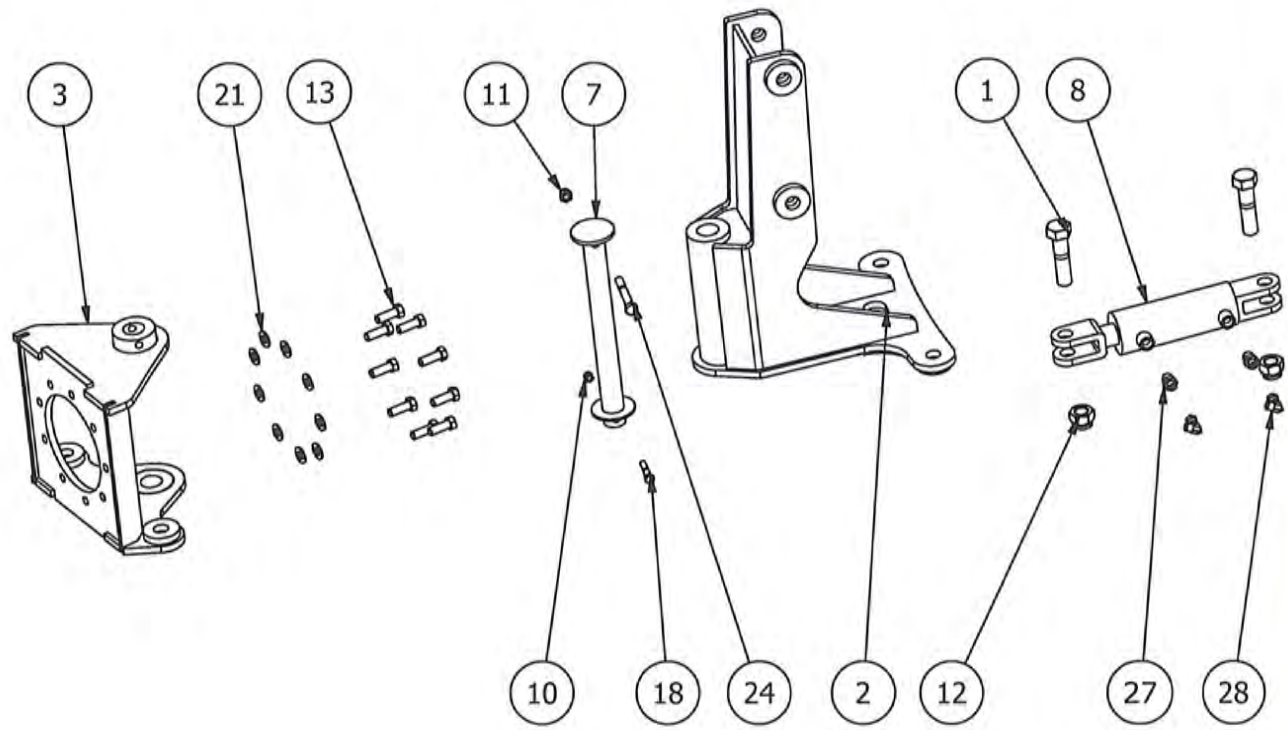

PARTS LIST

ITEM	QTY	PART NUMBER	TITLE
1	17	100-467	Bolt - Hex Head - 1" x 4" - GR5
2	4	100-714	Crawler - Wheel Drive Upright Bracket
3	4	100-715	Crawler - Wheel Drive Mounting Bracket
7	4	100-884	Crawler - A-Arm Pin Assembly
8	4	100-895	Hyd. Cylinder - Welded - 2.5" x 4"
10	24	100-902	Nut - Nylock - 0.375"
11	54	100-904	Nut - Nylock - 0.5"
12	42	100-907	Nut - Nylock - 1"
13	84	100-925	Bolt - Hex Head - M14 x 40 - 8.8
18	4	101-036	Bolt - Hex Head - 0.375" x 2" - GR5
21	84	104-005	Washer - Flat - 0.5625" - GR8
24	4	104-321	Bolt - Hex Head - 0.5" x 3.75" - GR5
27	10	104-455	Hyd. Adapter - Straight - #4 MORS x #8 MOR
28	8	104-461	Hyd. Adaptor - 90° Elbow - #4 MORS x #4 FORSX

NUHN15000050009

Exhibit 2037
Bazooka v. Nuhn - IPR2024-00098
Page 21 of 61

Crawler - A-Arm Assembly Detail C

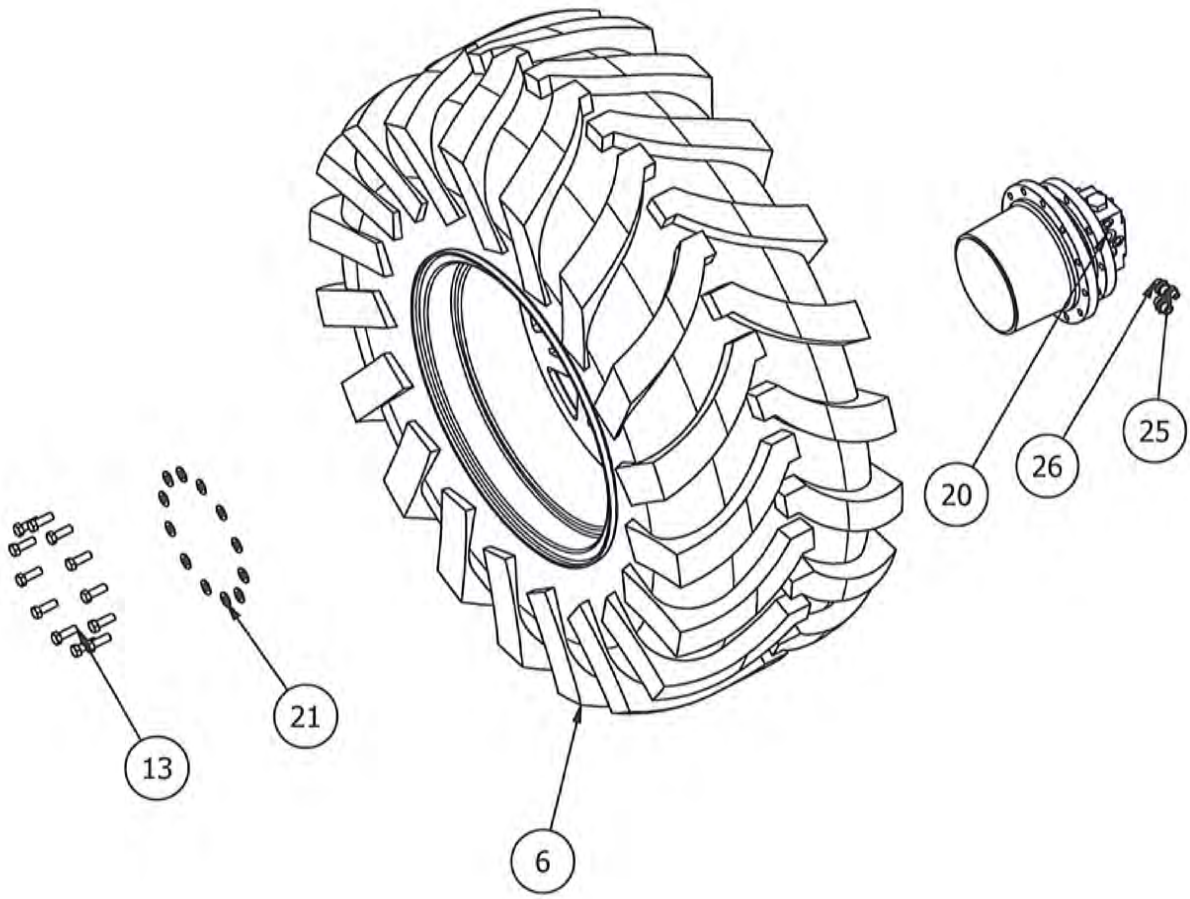

PARTS LIST

ITEM	QTY	PART NUMBER	TITLE
6	4	100-779	Tire - 500-70 R24 Goodyear Assembly
13	84	100-925	Bolt - Hex Head - M14 x 40 - 8.8
20	4	103-929	Crawler - Wheel Drive
21	84	104-005	Washer - Flat - 0.5625" - GR8
25	20	104-444	Hyd. Adaptor - Straight - #4 MBSPP x #4 MORS
26	8	104-445	Hyd. Adaptor - Straight - #8 MBSPP x #8 MORS

Crawler - Side Nozzle Assembly

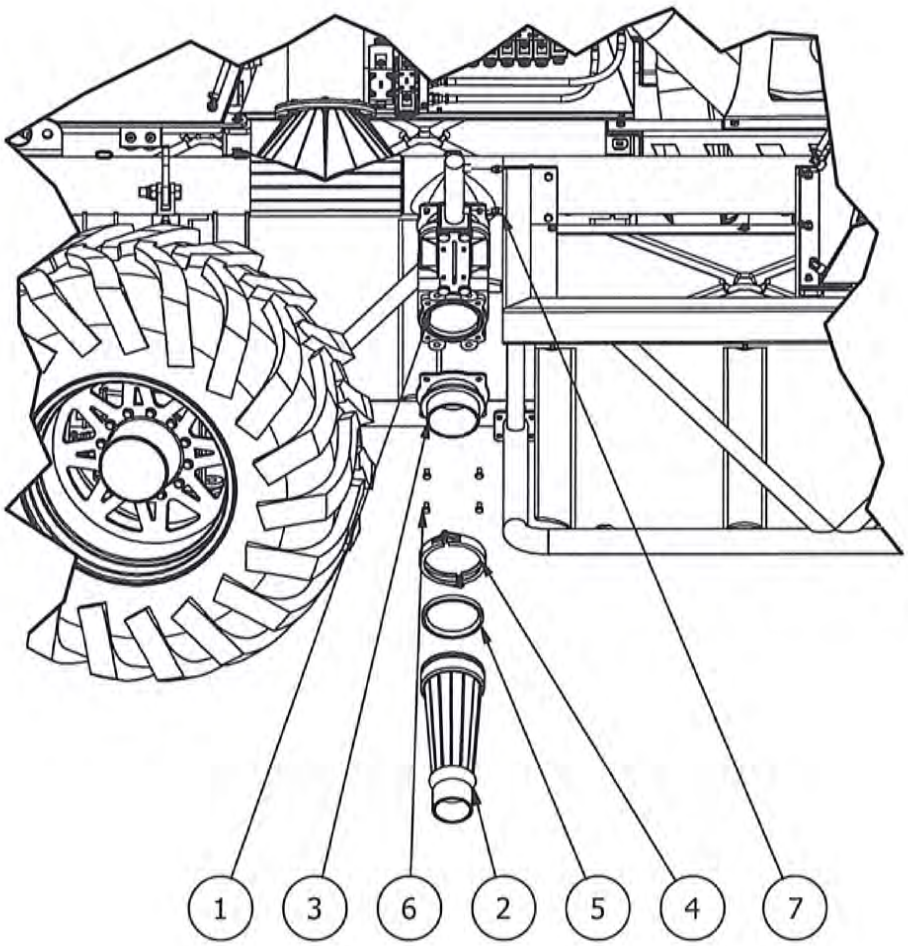

PARTS LIST

ITEM	QTY	PART NUMBER	TITLE
1	8	100-705	Stem Valve - 6" Cast Iron with SS Gate - Gladio with Cylinder
2	6	100-796	Crawler - Nozzle - 6" to 4" High Pressure
3	6	100-848	Flange - 6" Four Bolt to 6" High Pressure Male
4	6	100-849	Clamp - 6" High Pressure
5	8	100-890	Gasket - Rainway - 6"
6	64	100-923	Bolt - Hex Head - M12 x 20 - 8.8
7	20	104-444	Hyd. Adaptor - Straight - #4 MBSPP x #4 MORS

Crawler - Rear Two Nozzle Assembly

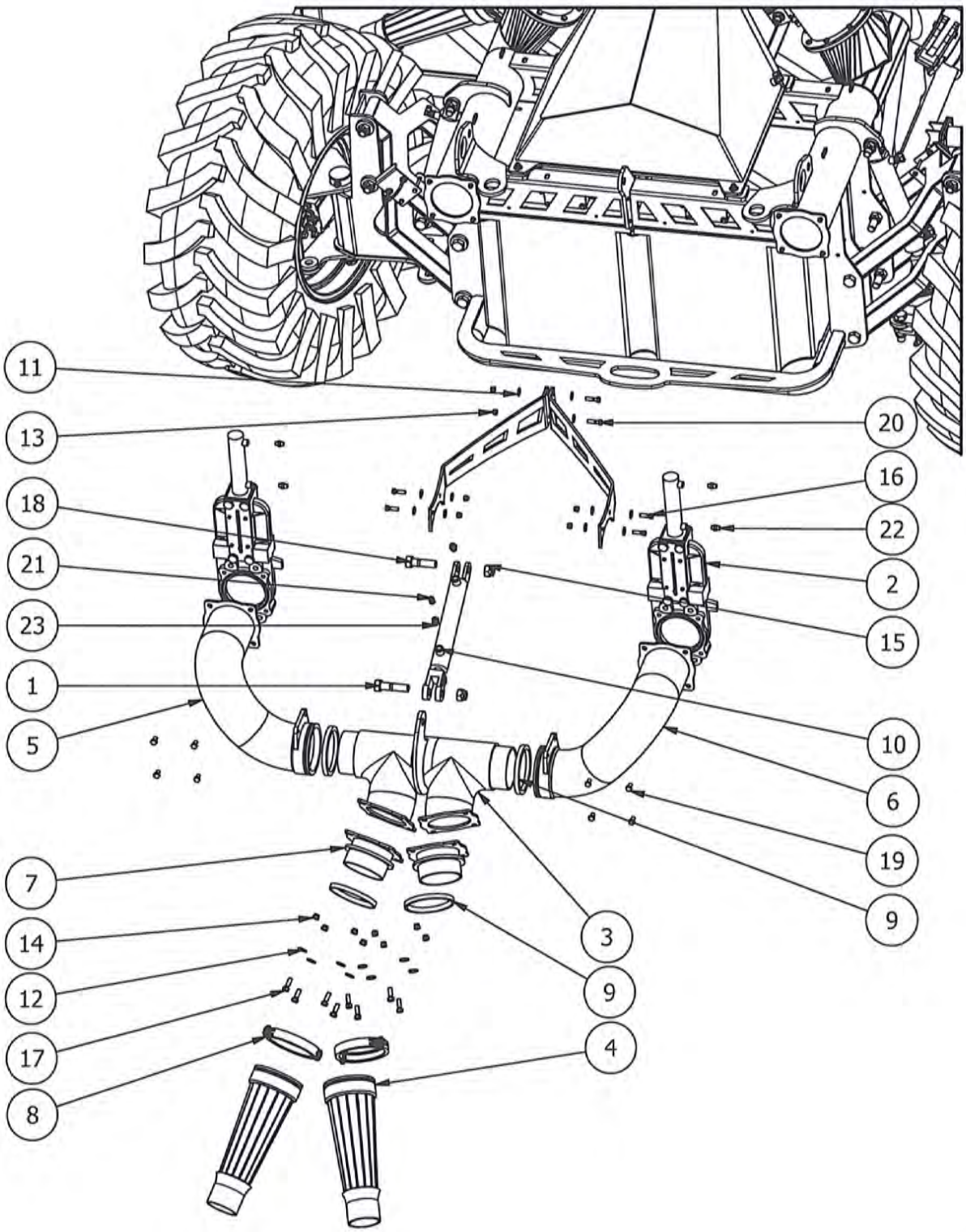

NUHN15000050012

Exhibit 2037
Bazooka v. Nuhn - IPR2024-00098
Page 24 of 61

Crawler - Rear Two Nozzle Assembly

PARTS LIST

ITEM	QTY	PART NUMBER	TITLE
1	17	100-467	Bolt - Hex Head - 1" x 4" - GR5
2	8	100-705	Stem Valve - 6" Cast Iron with SS Gate - Gladio with Cylinder
3	1	100-795	Crawler - Rear Double Nozzle Center Piece
4	6	100-796	Crawler - Nozzle - 6" to 4" High Pressure
5	1	100-846	Crawler - Left Rear Discharge Elbow
6	1	100-847	Crawler - Right Rear Discharge Elbow
7	6	100-848	Flange - 6" Four Bolt to 6" High Pressure Male
8	6	100-849	Clamp - 6" High Pressure
9	8	100-890	Gasket - Rainway - 6"
10	1	100-894	Hyd. Cylinder - Welded - 2" x 10"
11	66	100-897	Washer - Flat - 0.4375"
12	40	100-898	Washer - Flat - 0.5"
13	48	100-903	Nut - Nylock - 0.4375"
14	54	100-904	Nut - Nylock - 0.5"
15	42	100-907	Nut - Nylock - 1"
16	20	100-910	Bolt - Hex Head - 0.4375" x 1.5" - GR5
17	38	100-914	Bolt - Hex Head - 0.5" x 1.5" - GR5
18	1	100-920	Bolt - Hex Head - 1" x 3.5" - GR5
19	64	100-923	Bolt - Hex Head - M12 x 20 - 8.8
20	4	100-911	Bolt - Hex Head - 0.4375" x 1.75" - GR5
21	1	104-443	Hyd. Adaptor - Straight - #4 FORSX x #4 MORS - .047 Orifice
22	20	104-444	Hyd. Adaptor - Straight - #4 MBSPP x #4 MORS
23	10	104-455	Hyd. Adapter - Straight - #4 MORS x #8 MOR

Crawler - Main Frame Assembly Front

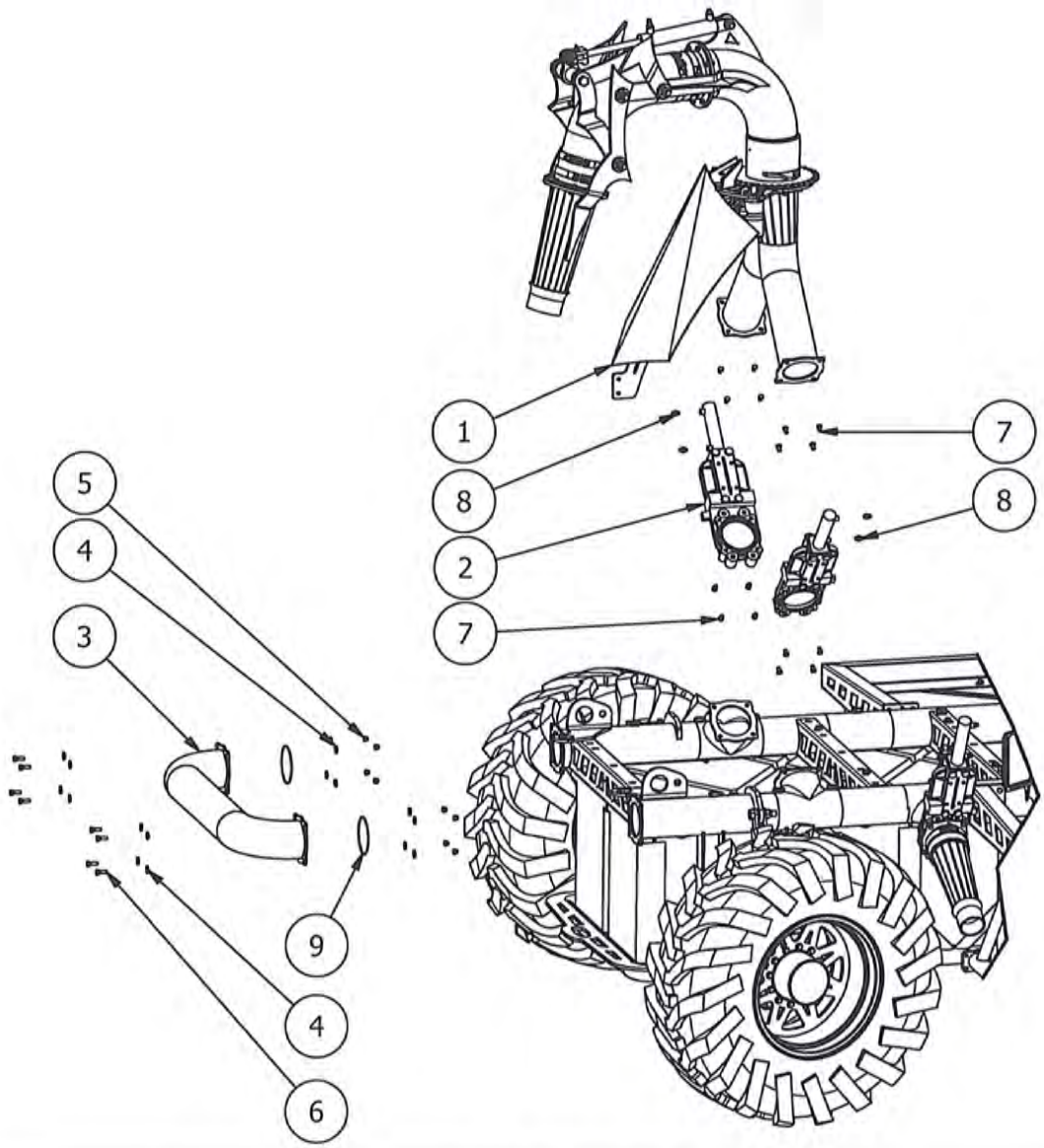

PARTS LIST

ITEM	QTY	PART NUMBER	TITLE
1	1		Option - Front Rotating Agitator Left and Right
2	8	100-705	Stem Valve - 6" Cast Iron with SS Gate - Gladio with Cylinder
3	1	100-772	Crawler - Front Bumper
4	40	100-898	Washer - Flat - 0.5"
5	54	100-904	Nut - Nylock - 0.5"
6	38	100-914	Bolt - Hex Head - 0.5" x 1.5" - GR5
7	64	100-923	Bolt - Hex Head - M12 x 20 - 8.8
8	20	104-444	Hyd. Adaptor - Straight - #4 MBSPP x #4 MORS
9	2	104-631	O-Ring - Flange - 7.5" x 7.5" Steel

Crawler Option - Rotating Agitator Left and Right

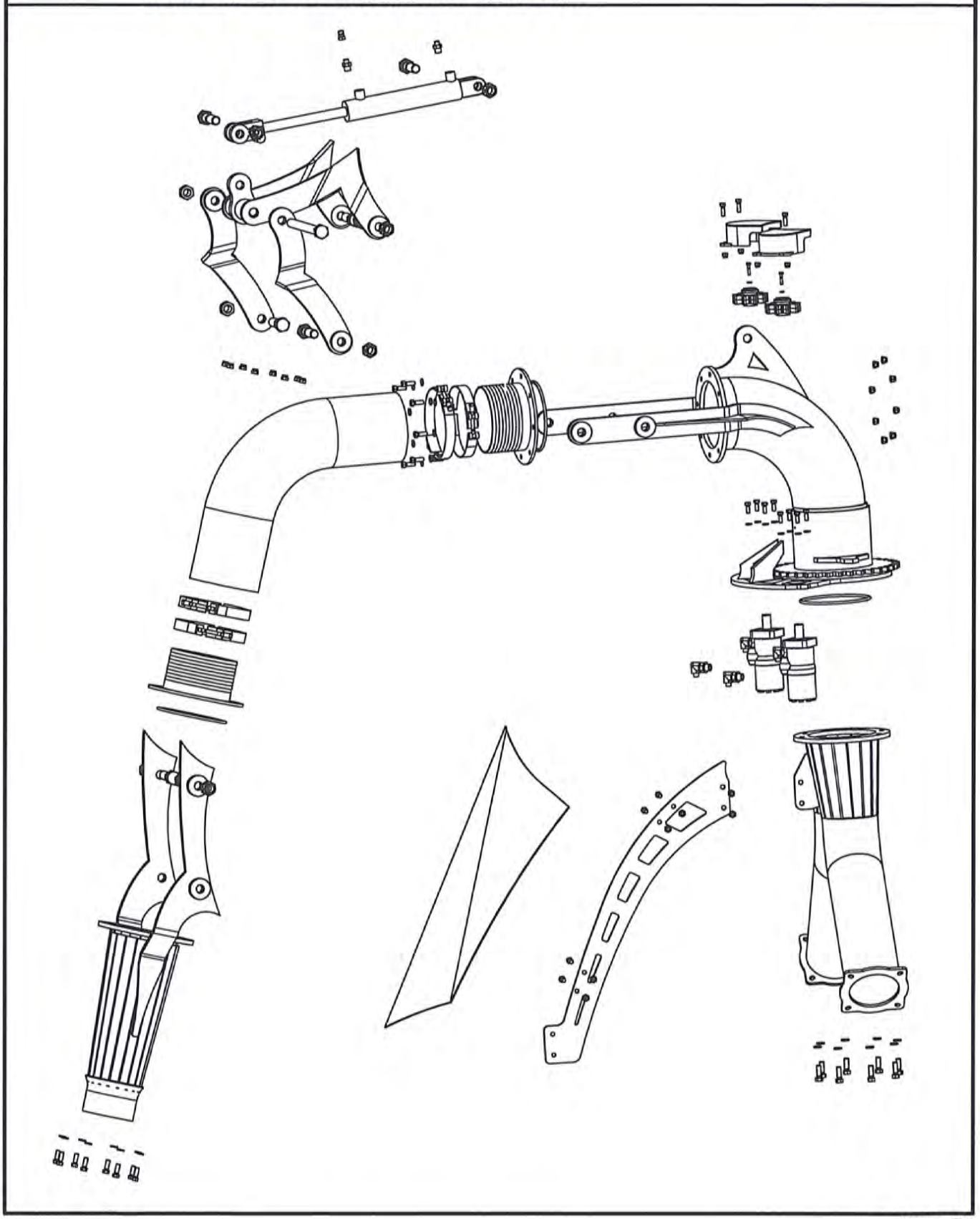

Crawler Option - Rotating Agitator Left and Right Detail A

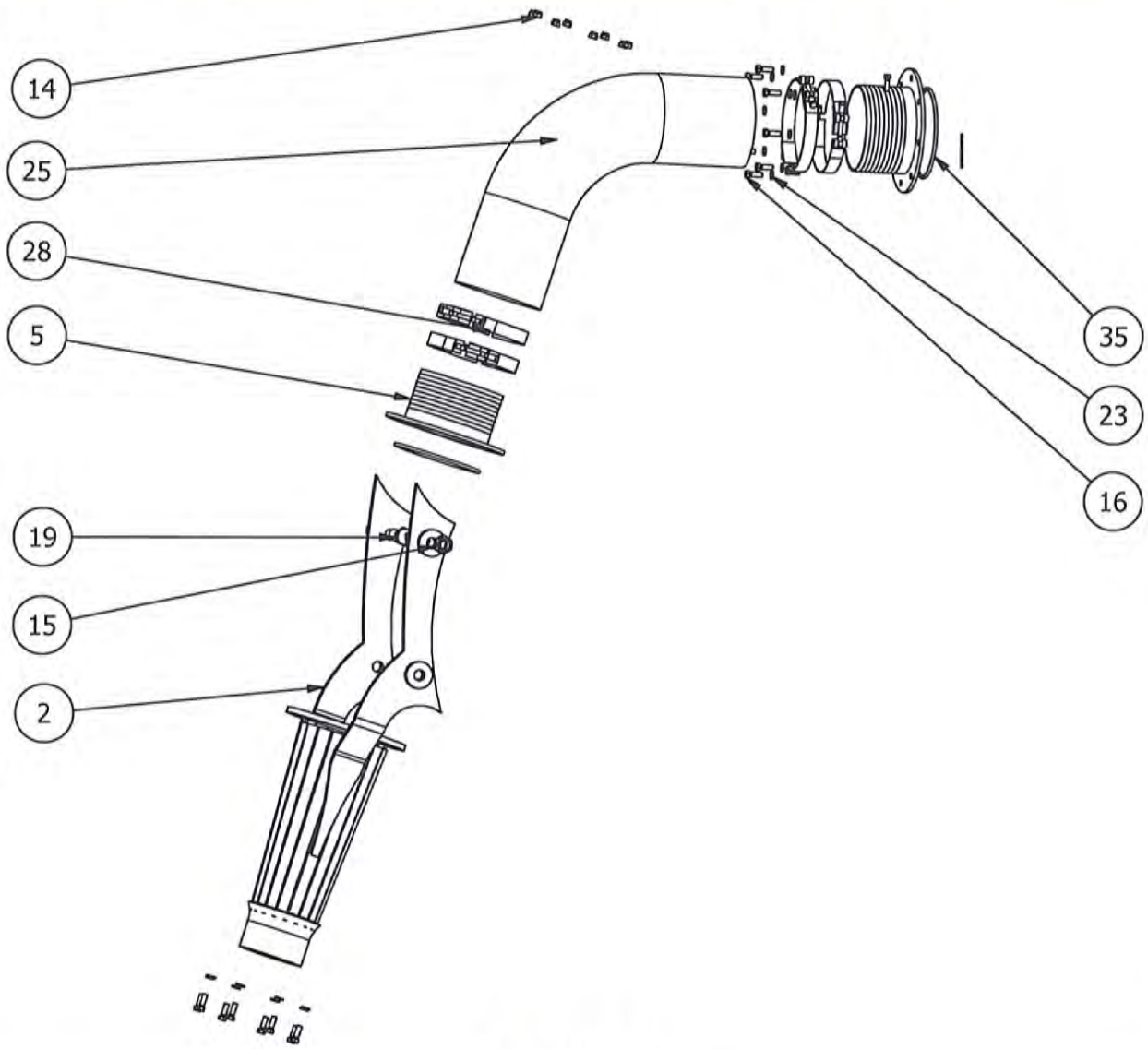

PARTS LIST

ITEM	QTY	PART NUMBER	TITLE
2	1	100-481	Agitator - Nozzle 8" to 6"
5	2	100-641	Barb with Flange - 8" Hose
14	22	100-903	Nut - Nylock - 0.4375"
15	9	100-907	Nut - Nylock - 1"
16	18	100-909	Bolt - Hex Head - 0.4375" x 1.25" - GR5
19	7	100-920	Bolt - Hex Head - 1" x 3.5" - GR5
23	18	101-186	Washer - Lock - 0.4375"
25	1	102-200x3	Hose - Layflat - Black - 8" x 36"
28	4	103-635	Hose Clamp - 8" - 200-220 - Double Bolt
35	3	105-008	O-Ring - Barb with Flange - 8" Hose

Crawler Option - Rotating Agitator Left and Right Detail B

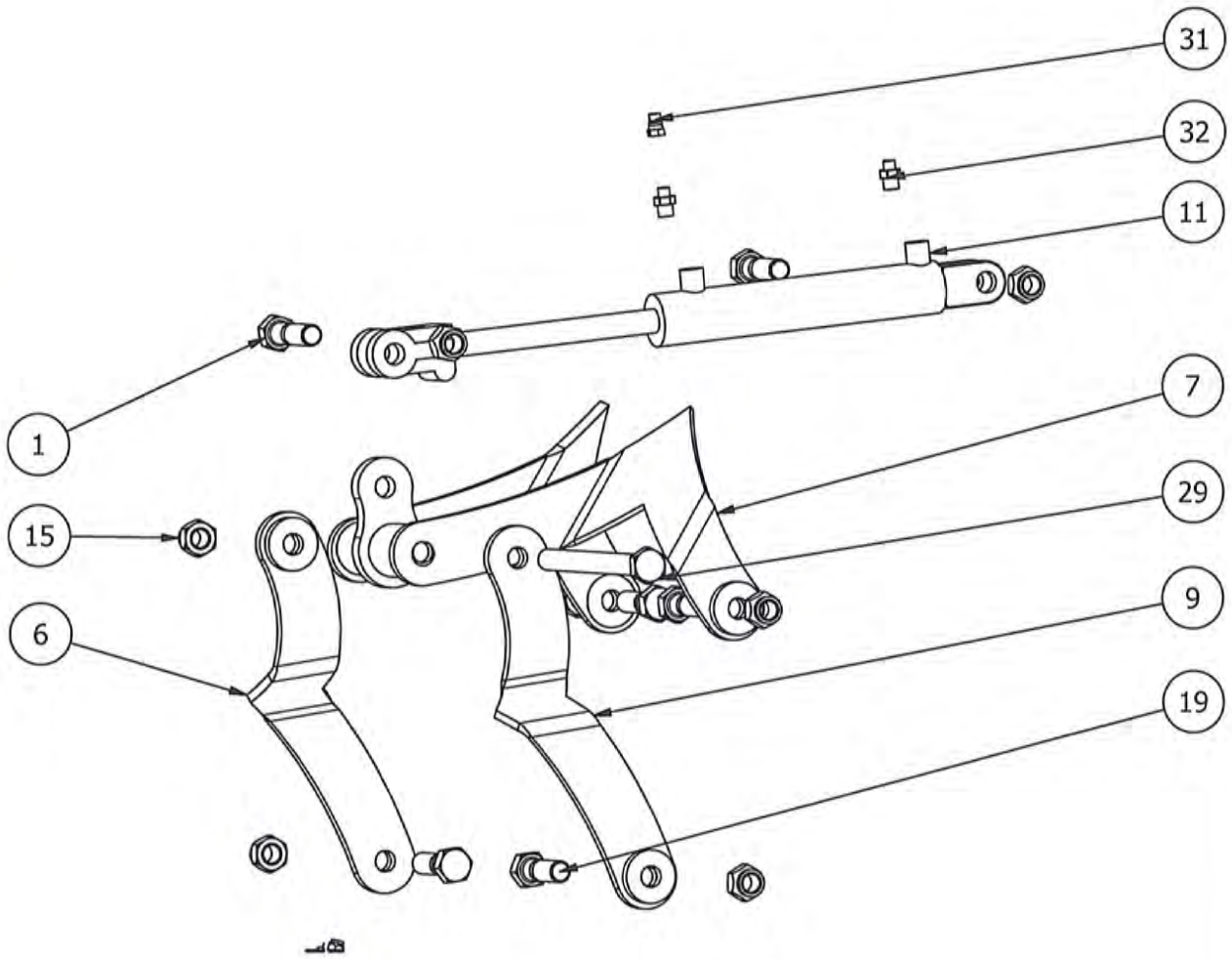

PARTS LIST

ITEM	QTY	PART NUMBER	TITLE
1	1	100-467	Bolt - Hex Head - 1" x 4" - GR5
6	1	100-642	Agitator - Secondary Linkage - Left
7	1	100-643	Agitator - Primary Linkage
9	1	100-792	Agitator - Secondary Linkage - Right
11	1	100-894	Hyd. Cylinder - Welded - 2" x 10"
15	9	100-907	Nut - Nylock - 1"
19	7	100-920	Bolt - Hex Head - 1" x 3.5" - GR5
29	1	104-158	Bolt - Hex Head - 1" x 12" - GR8
31	1	104-443	Hyd. Adaptor - Straight - #4 FORSX x #4 MORS - .047 Orifice
32	2	104-455	Hyd. Adapter - Straight - #4 MORS x #8 MOR

Crawler Option - Rotating Agitator Left and Right Detail C

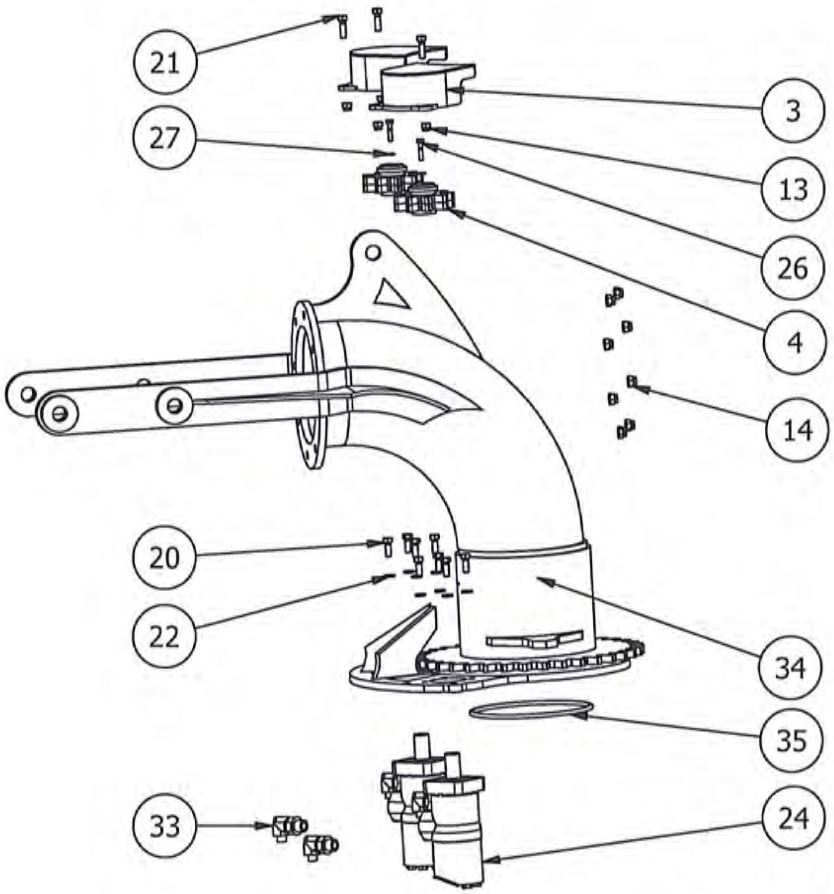

PARTS LIST

ITEM	QTY	PART NUMBER	TITLE
3	2	100-482	Sprocket Sheild
4	2	100-483	Rotator Sprocket (PTO Assembly)
13	4	100-902	Nut - Nylock - 0.375"
14	22	100-903	Nut - Nylock - 0.4375"
20	8	101-021	Bolt - Hex Head - 0.375" x 1" - GR5
21	4	101-034	Bolt - Hex Head - 0.375" x 1.25" - GR5
22	8	101-185	Washer - Lock - 0.375"
24	2	101-967	Hyd. Motor - 400 Series - 4 Bolt
26	2	103-125	Bolt - Hex Head - 0.25" x 1.25" - GR5
27	2	103-145	Washer - Lock - 0.25"
33	4	104-498	Hyd. Adaptor - 90° Elbow - #6 MORS x #10 MOR
34	1	104-507	Crawler - 8" Agitator Swivel Base (Dual Motor Drive Mount)
35	3	105-008	O-Ring - Barb with Flange - 8" Hose

Crawler Option - Rotating Agitator Left and Right Detail D

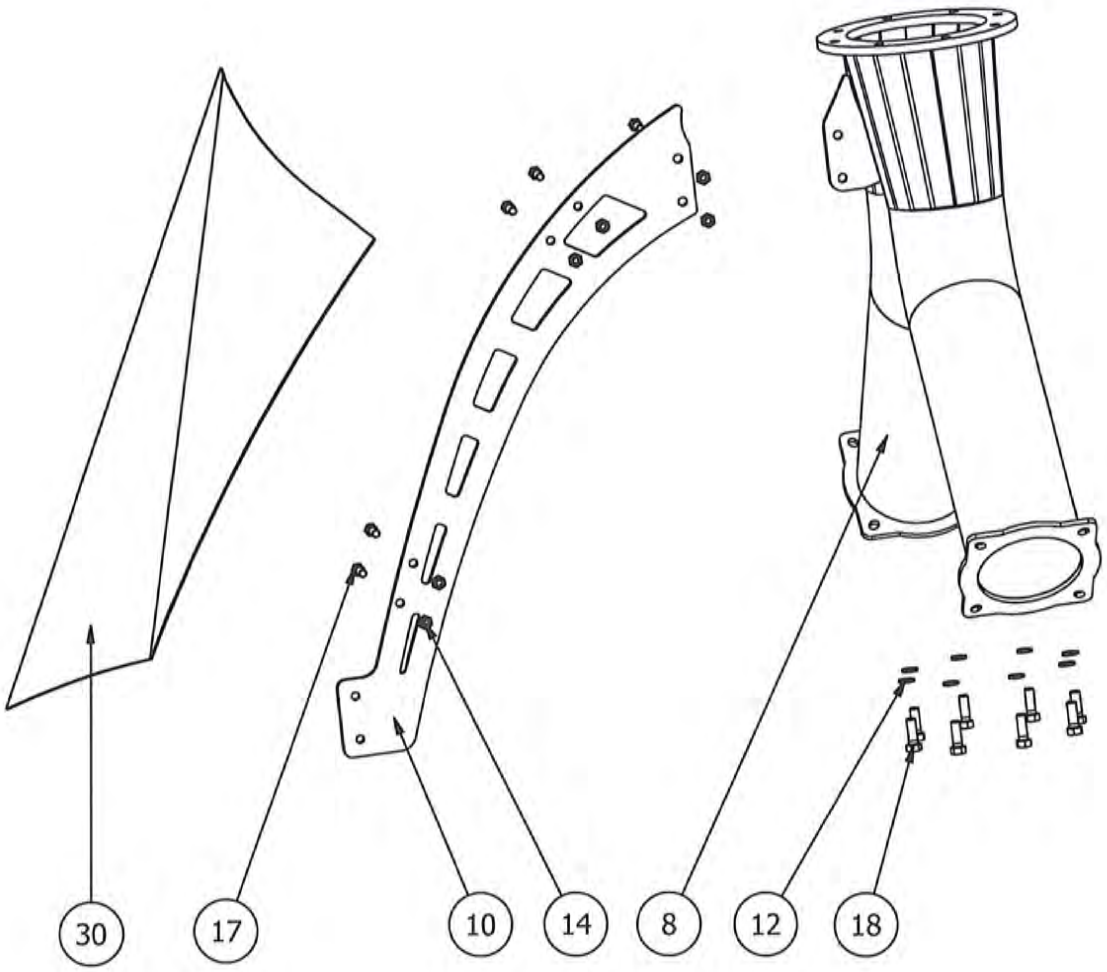

PARTS LIST

ITEM	QTY	PART NUMBER	TITLE
8	1	100-789	Crawler - Agitator Dual 6" to 8" Y Mounting Assembly
10	1	100-832	Crawler - Agitator Mounting Brace
12	9	100-900	Washer - Lock - 0.5"
14	22	100-903	Nut - Nylock - 0.4375"
17	6	100-910	Bolt - Hex Head - 0.4375" x 1.5" - GR5
18	9	100-914	Bolt - Hex Head - 0.5" x 1.5" - GR5
30	1	104-227	Crawler - Splash Guard - Radiator

Crawler - Main Frame Assembly Rear

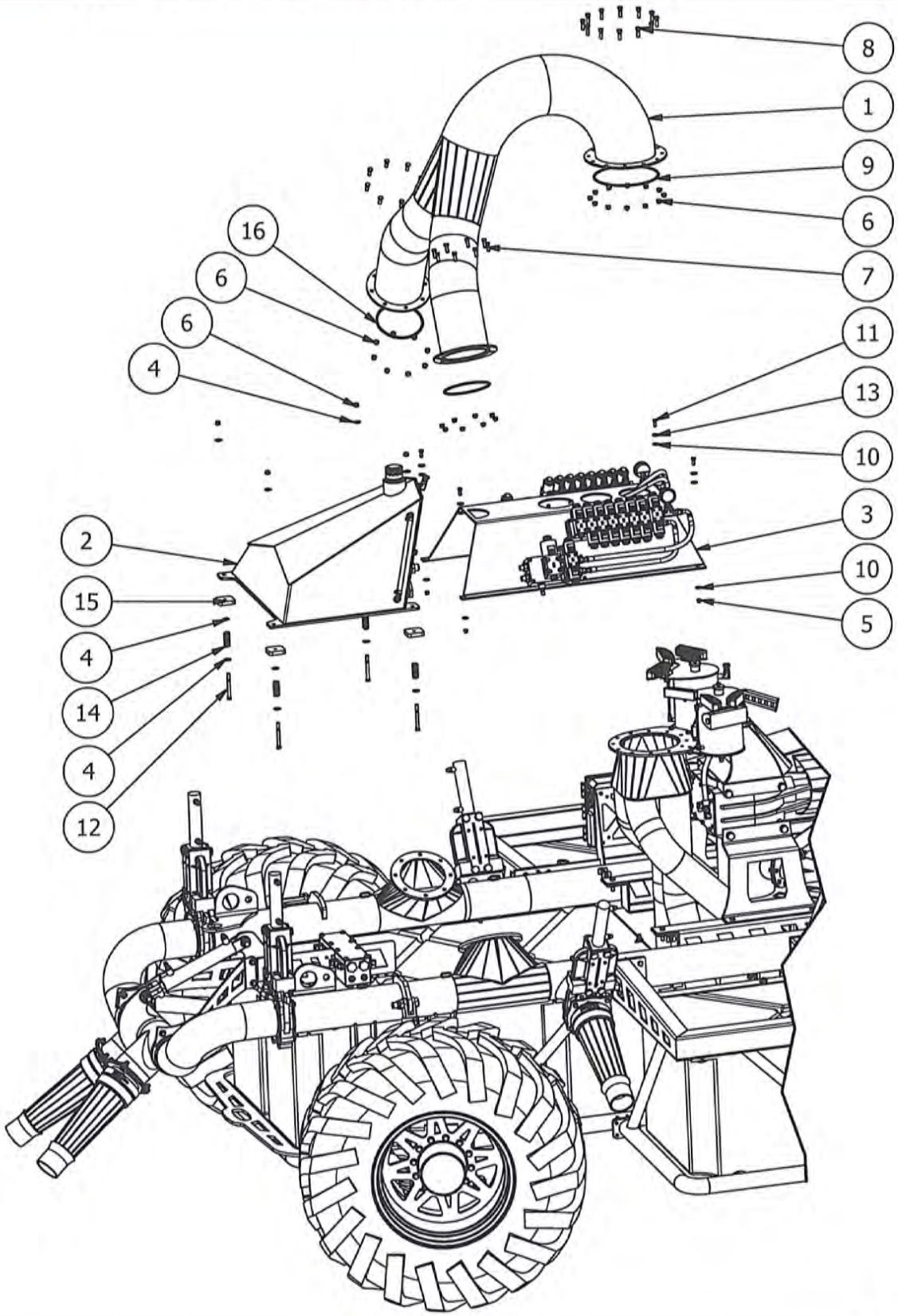

NUHN15000050020

Exhibit 2037
Bazooka v. Nuhn - IPR2024-00098
Page 32 of 61

NUHN

Crawler - Main Frame Assembly Rear

PARTS LIST

ITEM	QTY	PART NUMBER	TITLE
1	1	100-775	Crawler - Agitation Dual 8" to 10" Y Mount
2	1	100-784	Crawler - Hydraulic Oil Tank Complete
3	1	100-800	Crawler - Hydraulic Drive Solenoid System
4	66	100-897	Washer - Flat - 0.4375"
5	24	100-902	Nut - Nylock - 0.375"
6	48	100-903	Nut - Nylock - 0.4375"
7	16	100-909	Bolt - Hex Head - 0.4375" x 1.25" - GR5
8	20	100-910	Bolt - Hex Head - 0.4375" x 1.5" - GR5
9	1	100-958	Crawler - O-Ring - 10" Y Mount
10	8	101-001	Washer - Flat - 0.375"
11	4	101-021	Bolt - Hex Head - 0.375" x 1" - GR5
12	8	101-192	Bolt - Hex Head - 0.4375" x 4.5" - GR5
13	4	103-673	Washer - Neoprene Black - 1"OD x 0.375"ID x 0.125"
14	10	104-214	Crawler - Compression Spring - #40 - 0.75"OD x 3.5"
15	4	104-597	Crawler - Rubber - Oil Tank - 4.5" x 3"
16	2	105-008	O-Ring - Barb with Flange - 8" Hose

Crawler - Hydraulic Oil Tank Complete	100-784

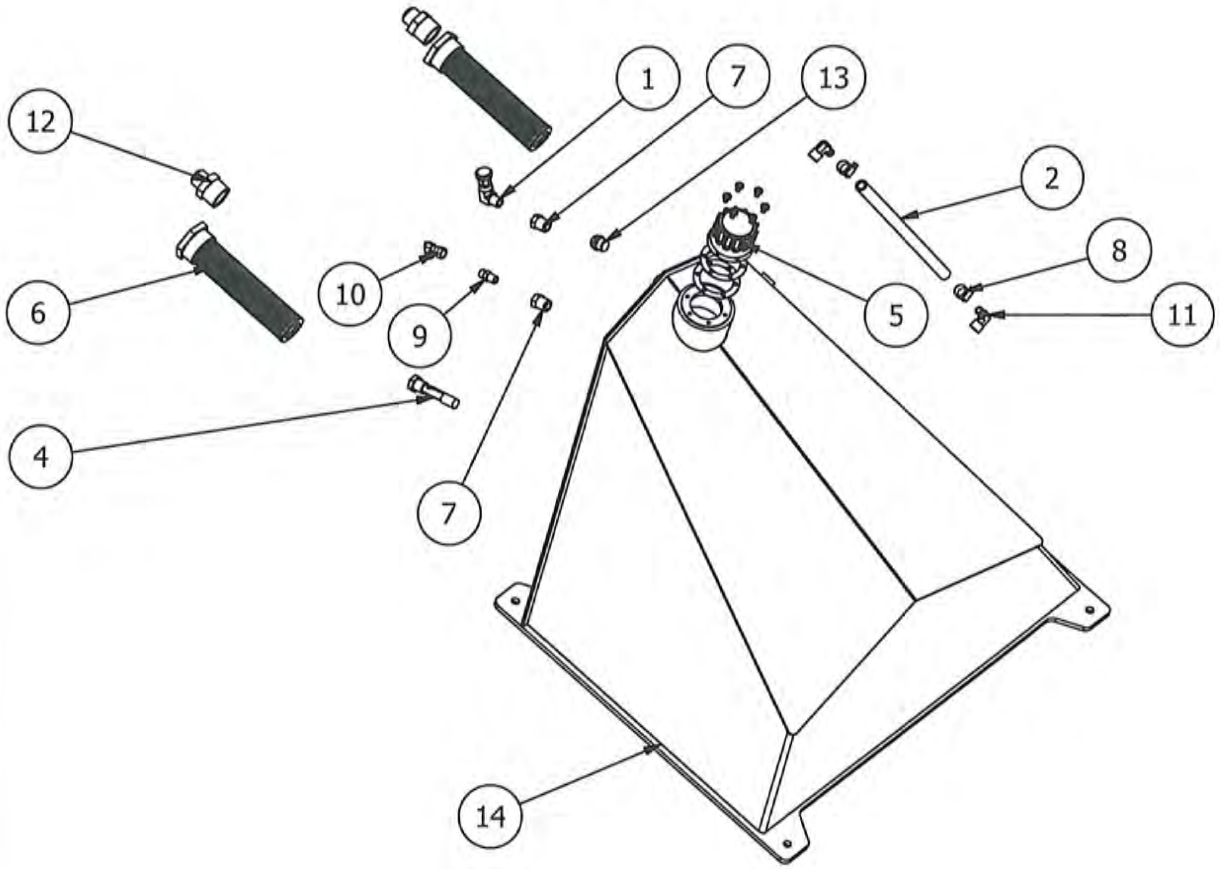

PARTS LIST

ITEM	QTY	PART NUMBER	TITLE
1	1	101-538	Hyd. Adaptor - 90° Elbow - #6 FP x #6 MP
2	1	102-752x1.2	Hose - Water - 0.5 PVC - Steel Wire Reinforcement - 14.625"
3	1	103-809	Hyd. Fitting - 0.375" NPT Hooded Breather Plug
4	1	103-976	Crawler - Fuel Level Switch
5	1	103-977	Crawler - Fuel Cap - Filler Breather
6	2	104-139	Crawler - Suction Strainer - 2" MP x 1.25" FP
7	2	104-241	Hyd. Adaptor - Straight - #8 MP x #4 FP
8	2	104-370	Hose Clamp - 0.4375" Gear Clamp #8 SS
9	1	104-447	Hyd. Adaptor - Straight - #4 MP x #4 MORS
10	1	104-461	Hyd. Adaptor - 90° Elbow - #4 MORS x #4 FORSX
11	2	104-470	Hyd. Adaptor - 90° Elbow - #8 BARB x #8 MP - Brass
12	2	104-472	Hyd. Adaptor - Straight - #20 MP x #16 MJ
13	1	104-523	Pipe - Plug - 0.5" Hex Head
14	1	104-540	Crawler - Oil Tank (Hydraulic)

Crawler - Hydraulic Drive Solenoid System | 100-800

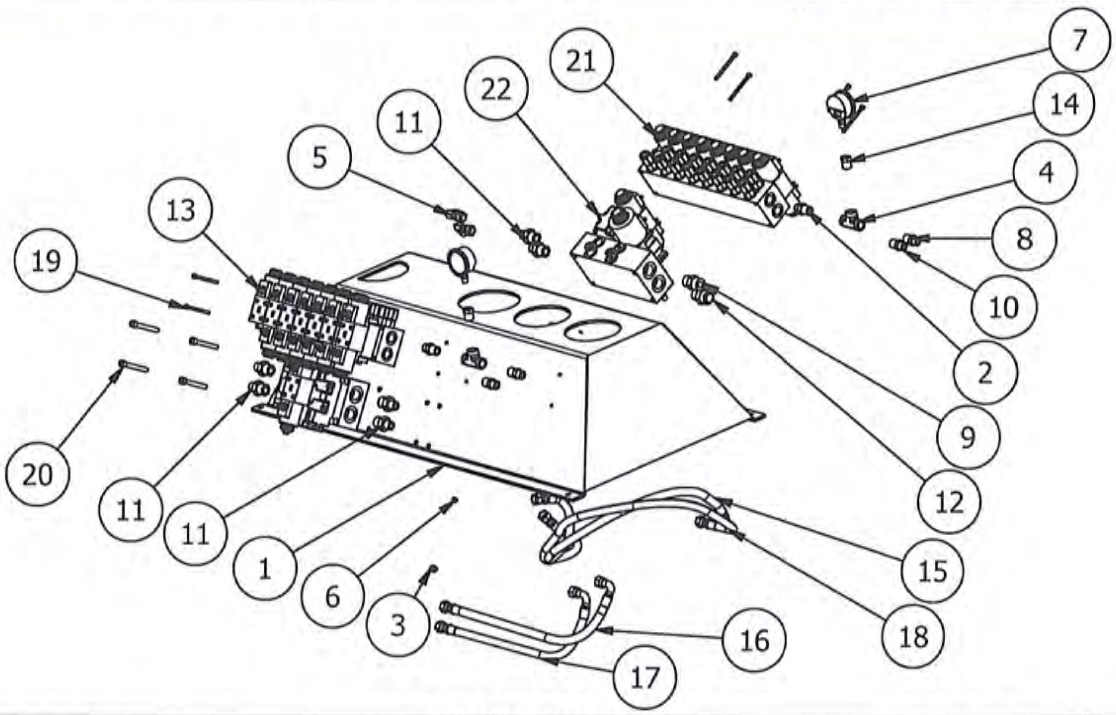

PARTS LIST

ITEM	QTY	PART NUMBER	TITLE
1	1	100-785	Crawler - Hydraulic Solenoid Mount
2	2	100-852	Hyd. Adaptor - Straight - #8 MP x #8 MOR
3	8	100-902	Nut - Nylock - 0.375"
4	2	101-543	Hyd. Adaptor - Tee - #8 FP x #8 FP x #8 FP
5	2	101-567	Hyd. Adaptor - 90° Elbow - #8 FPX x #8 MP
6	8	102-521	Nut - Nylock - 0.25"
7	2	102-593	Gauge - Down Pressure - 3000 psi - #4 MP
8	2	104-441	Hyd. Adaptor - Straight - #8 MP x #8 MORS
9	1	104-450	Hyd. Adaptor - Straight - #12 MOR x #12 MORS
10	2	104-457	Hyd. Adaptor - Straight - #8 MOR x #8 MORS
11	6	104-459	Hyd. Adaptor - Straight - #12 MOR x #8 MORS
12	1	104-473	Hyd. Adaptor - Straight - #12 MOR x #16 MJ
13	1	104-591	Crawler - Hydraulic Solenoid Right Assembly
14	2	104-602	Hyd. Adaptor - Straight - #8 MP x #4 FP
15	1	104-604	Hyd. Hose - 0.5" - 57.8" - #8 FORS x #8 FORS 90° - #104
16	1	104-605	Hyd. Hose - 0.5" - 25.8" - #8 FORS x #8 FORS 90° - #106
17	1	104-606	Hyd. Hose - 0.5" - 22.8" - #8 FORS x #8 FORS 90° - #107
18	1	104-607	Hyd. Hose - 0.5" - 62.6" - #8 FORS x #8 FORS - #105
19	8	104-609	Bolt - Socket Head - M6 x 80 - 12.9 Black Oxide
20	8	104-610	Bolt - Socket Head - M10 x 75 - 12.9 Black Oxide
21	1	104-632	Crawler - Hydraulic Solenoid Left Assembly
22	2	104-031	Crawler - Drive Solenoid Assembly

Crawler - Hydraulic Solenoid Right Assembly | 104-591

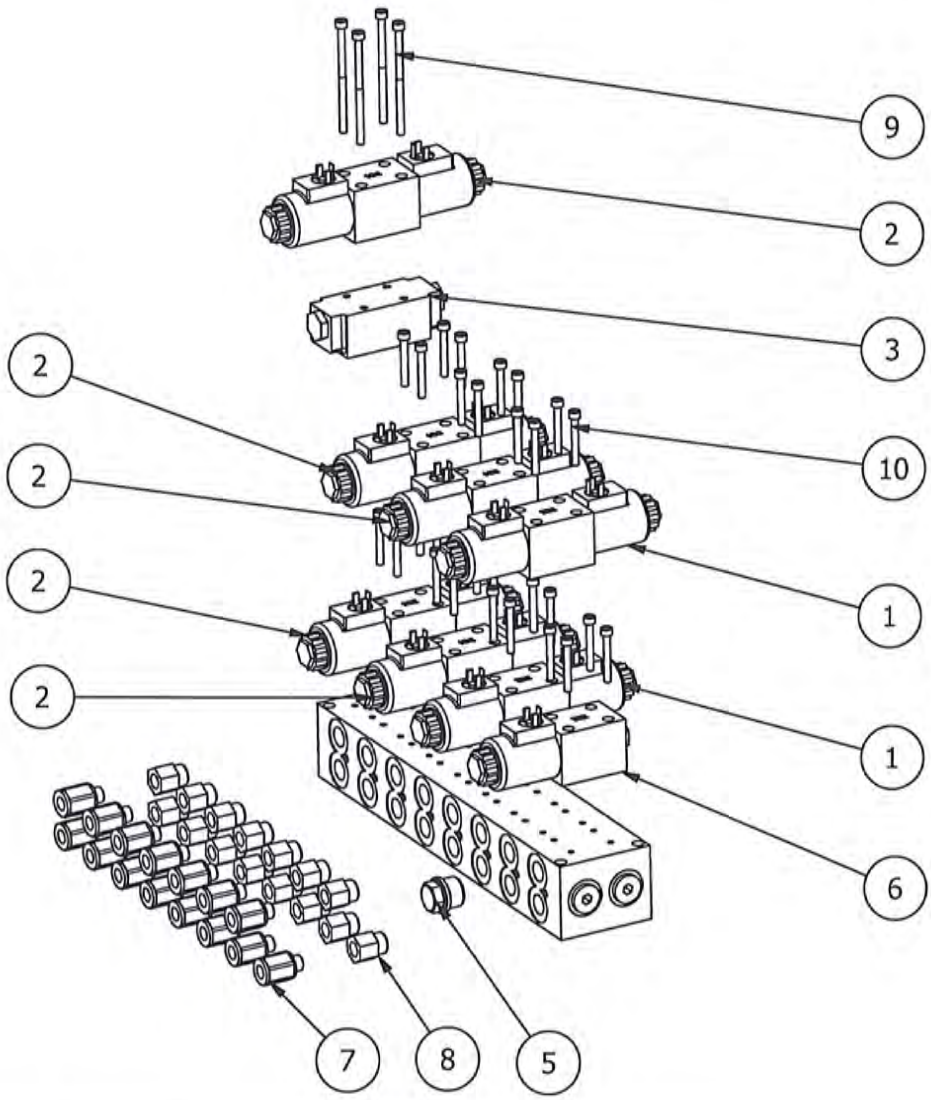

PARTS LIST

ITEM	QTY	PART NUMBER	TITLE
1	2	101-822	Solenoid - 3C2 Valve
2	5	101-823	Solenoid - 3C4 Valve
3	1	101-824	Check Valve - Modular - Pilot OP MPW-01-2-2090
4	1	103-753	Remote - Manifold - 8 Station Block
5	1	104-036	Hyd. Fitting - #12 ORB Plug
6	1	104-063	Solenoid - 2B2 Valve
7	15	104-442	Hyd. Adaptor - Straight - #6 MOR x #6 FWEO
8	15	104-446	Hyd. Adaptor - Straight - #8 MOR x #6 FP
9	4	104-636	Bolt - Socket Head - M6 x 100 - 12.9 Black Oxide
10	28	104-637	Bolt - Socket Head - M6 x 45 - 12.9 Black Oxide

Crawler - Hydraulic Solenoid Left Assembly | 104-632

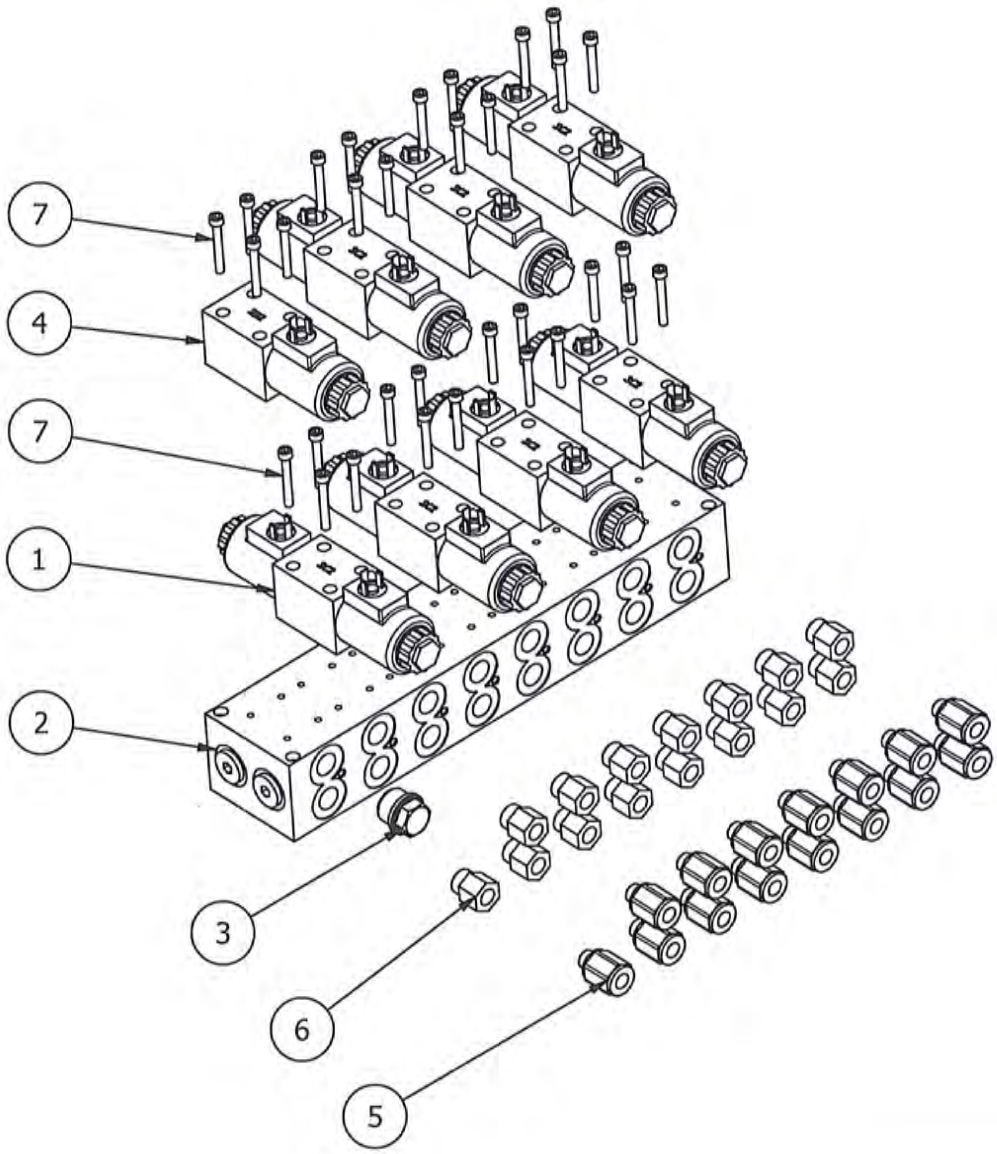

PARTS LIST

ITEM	QTY	PART NUMBER	TITLE
1	7	101-822	Solenoid - 3C2 Valve
2	1	103-753	Remote - Manifold - 8 Station Block
3	1	104-036	Hyd. Fitting - #12 ORB Plug
4	1	104-063	Solenoid - 2B2 Valve
5	15	104-442	Hyd. Adaptor - Straight - #6 MOR x #6 FWEO
6	15	104-446	Hyd. Adaptor - Straight - #8 MOR x #6 FP
7	32	104-637	Bolt - Socket Head - M6 x 45 - 12.9 Black Oxide

Crawler - Drive Solenoid Assembly

104-031

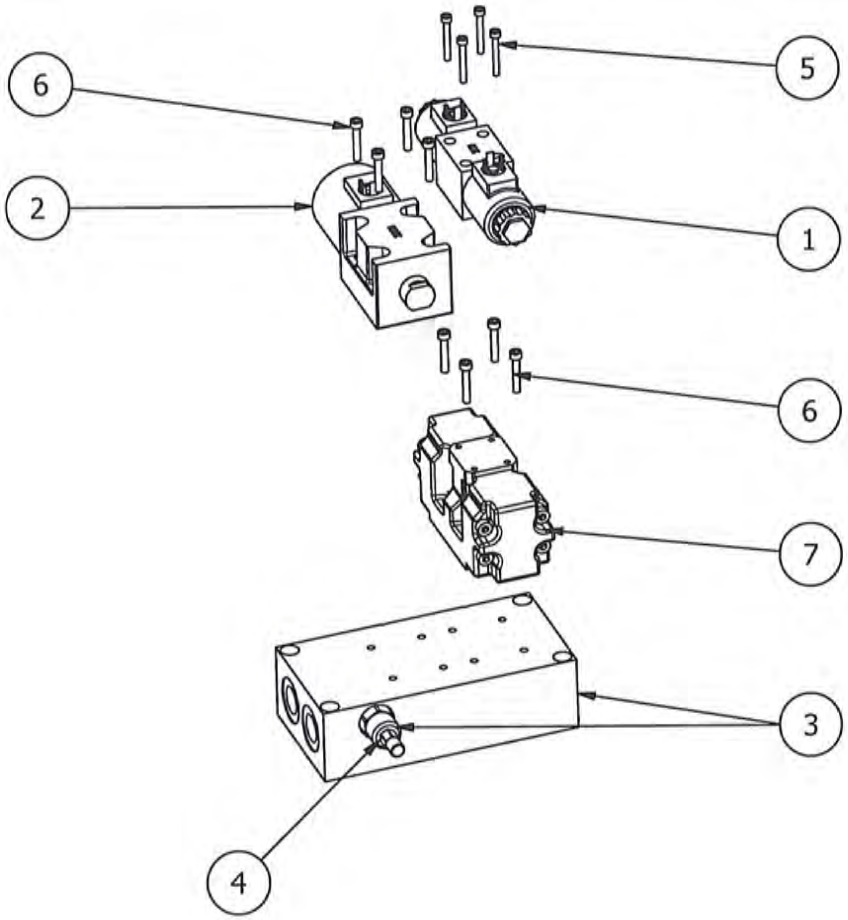

PARTS LIST

ITEM	QTY	PART NUMBER	TITLE
1	1	101-823	Solenoid - 3C4 Valve
2	1	104-187	Crawler - Dump Valve - DSG-2B3B-N-03
3	1	104-638	Crawler - Manifold - Main Drive
4	1	104-639	Crawler - Relief Valve
5	4	104-641	Bolt - Socket Head - M5 x 40 - 12.9 Black Oxide
6	8	104-642	Bolt - Socket Head - M6 x 35 - 12.9 Black Oxide
7	1	100-957	Crawler - Hydraulic Master Valve

Crawler - Main Frame Assembly

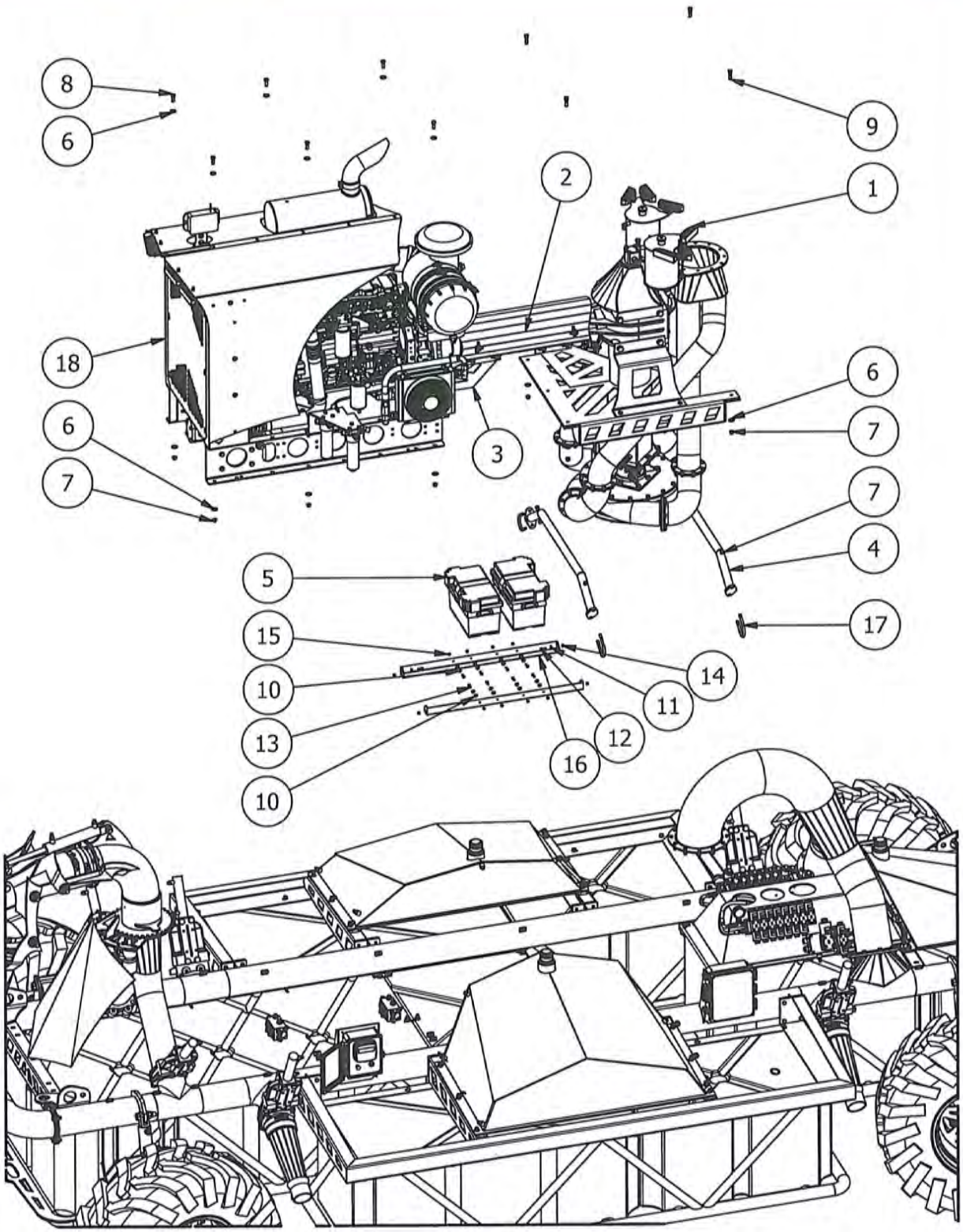

NUHN15000050027

Exhibit 2037
Bazooka v. Nuhn - IPR2024-00098
Page 39 of 61

Crawler - Main Frame Assembly

PARTS LIST

ITEM	QTY	PART NUMBER	TITLE
1	1	100-773	Crawler - Pump Module
2	1	100-788	Crawler - PTO Shield
3	1	100-801	Crawler - PTO Shield - Front Bracket
4	2	100-804	Crawler - Cross Strut
5	2	100-818	Crawler - Battery Box Assembly
6	40	100-898	Washer - Flat - 0.5"
7	54	100-904	Nut - Nylock - 0.5"
8	38	100-914	Bolt - Hex Head - 0.5" x 1.5" - GR5
9	4	100-916	Bolt - Hex Head - 0.5" x 2" - GR5
10	16	101-019	Washer - Flat - 0.25"
11	26	101-020	Washer - Flat - 0.3125"
12	9	101-026	Bolt - Hex Head - 0.3125" x 1" - GR5
13	12	101-058	Bolt - Hex Head - 0.25" x 1" - GR5
14	24	101-189	Nut - Nylock - 0.3125"
15	8	102-521	Nut - Nylock - 0.25"
16	1	103-985	Crawler - Battery Brace
17	4	104-137	Bolt - U - 0.5" x 2.5" Pipe size
18	1	104-550	Crawler - Engine - Complete Assembly

Crawler - Engine - Complete Assembly	104-550	

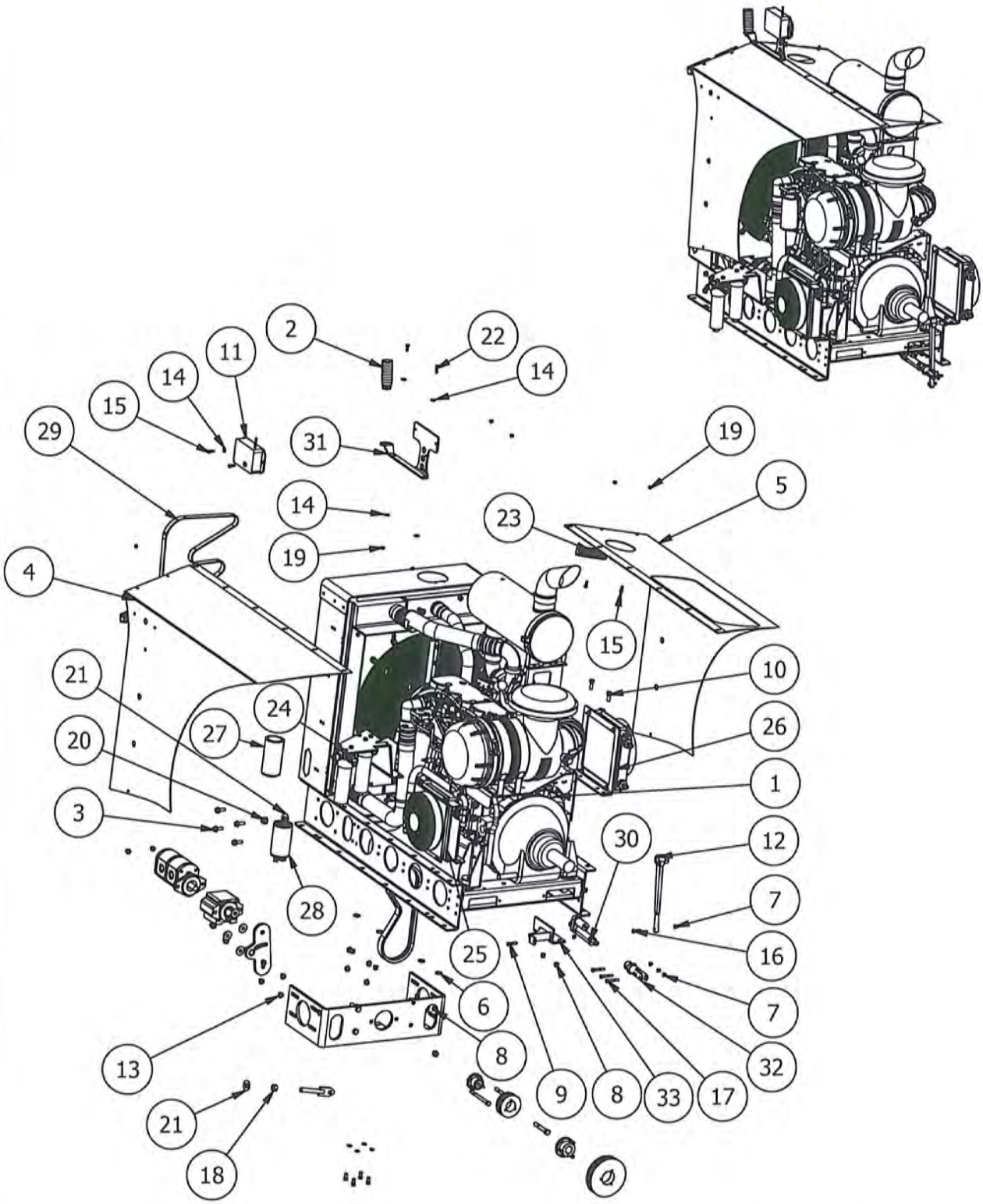

NUHN15000050029

Exhibit 2037
Bazooka v. Nuhn - IPR2024-00098
Page 41 of 61

Crawler - Engine - Complete Assembly	104-550

PARTS LIST

ITEM	QTY	PART NUMBER	TITLE
1	1	100-666	Crawler - Engine QSB6.7 T3 Cummins
2	1	100-704	Crawler LED Tower Light - 4-Colour
3	8	100-791	Bolt - Hex Flange - 0.5" x 1.5" - GR5 Serrated
4	1	100-882	Crawler - Engine Cover - Left Side
5	1	100-883	Crawler - Engine Cover - Right Side
6	8	100-898	Washer - Flat - 0.5"
7	5	100-902	Nut - Nylock - 0.375"
8	6	100-904	Nut - Nylock - 0.5"
9	1	100-908	Bolt - Hex Head - 0.375" x 1.75" - GR5
10	6	100-914	Bolt - Hex Head - 0.5" x 1.5" - GR5
11	1	100-946	Remote - Crawler - Receiver
12	1	100-947	Crawler - Engine Clutch Arm
13	8	100-956	Nut - Hex Flange - 0.5" Serrated
14	6	101-020	Washer - Flat - 0.3125"
15	7	101-026	Bolt - Hex Head - 0.3125" x 1" - GR5
16	1	101-035	Bolt - Hex Head - 0.375" x 1.5" - GR5
17	3	101-037	Bolt - Hex Head - 0.375" x 2.5" - GR5
18	1	101-167	Nut - 0.75"
19	8	101-189	Nut - Nylock - 0.3125"
20	1	101-201	Nut - Nylock - 0.75"
21	2	101-202	Washer - Flat - 0.75"
22	1	103-771	Bolt - Hex Head - 0.3125" x 1.25" - GR5
23	4	104-173	Crawler - Headlight - LED Rectangular
24	1	104-400	Crawler - High Pressure Filter Assembly with Bracket
25	1	104-411	Crawler - Hydraulic Oil Cooler Assembly
26	1	104-415	Crawler - Gear Oil Cooler Assembly
27	1	104-526	Crawler - Engine - Diesel Fuel Filter - FF5612
28	1	104-528	Crawler - Engine - Fuel/Water Filter - FS19732
29	1	104-529	Crawler - Cummins - Fan Belt 3289930
30	1	104-536	Crawler - Linear Actuator - 12V - 4" Stroke - Reduction 9.06"
31	1	104-552	Crawler - Light and Radio Mount Bracket
32	1	104-571-1	Crawler - Actuator Yoke - SKF
33	1	104-720	Crawler - SKF Actuator Mount

Crawler - High Pressure Filter Assembly with Bracket | 104-400

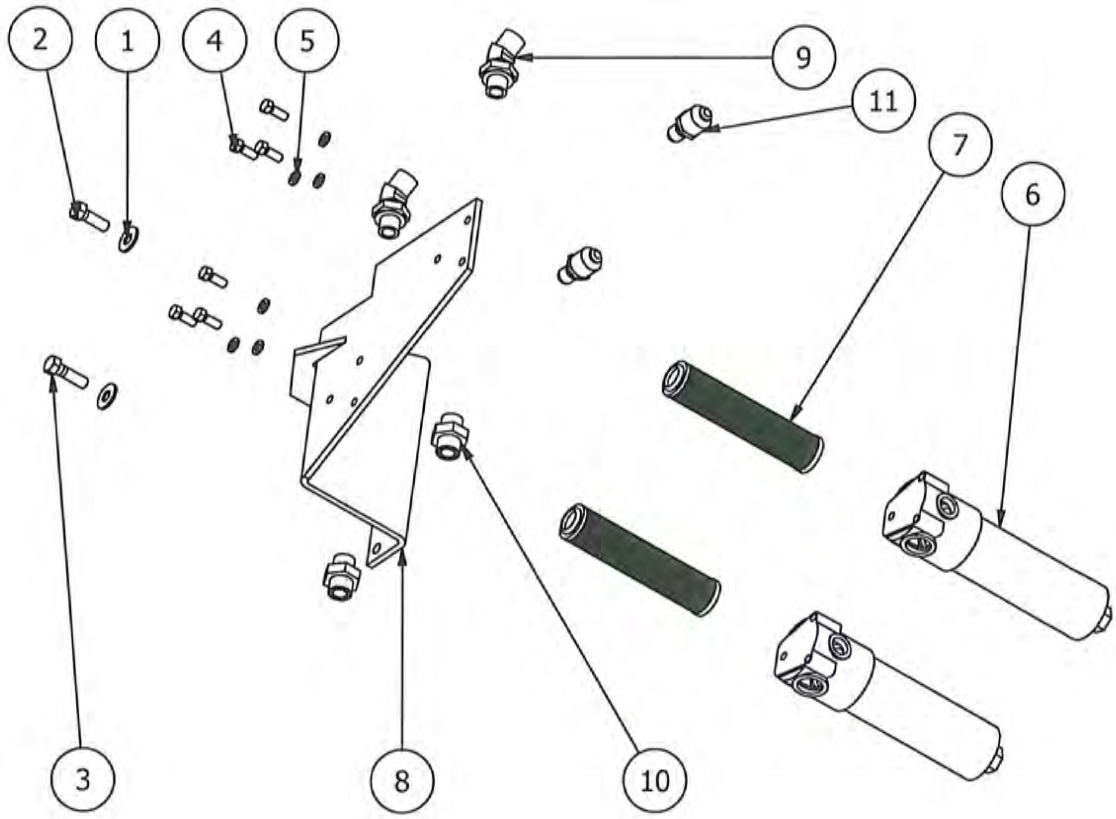

PARTS LIST

ITEM	QTY	PART NUMBER	TITLE
1	2	100-898	Washer - Flat - 0.5"
2	1	100-914	Bolt - Hex Head - 0.5" x 1.5" - GR5
3	1	100-915	Bolt - Hex Head - 0.5" x 1.75" - GR5
4	6	101-021	Bolt - Hex Head - 0.375" x 1" - GR5
5	6	101-185	Washer - Lock - 0.375"
6	2	104-002	Crawler - High Pressure Filter Assembly (with Filter)
7	2	104-258	Replacement Element for Filter (Ikron) Casappa
8	1	104-325	Crawler - Mount for High Pressure Filter
9	2	104-449	Hyd. Adapter - 45° Elbow - #12 MORS x #12 MOR
10	2	104-450	Hyd. Adapter - Straight - #12 MORS x #12 MOR
11	2	104-520	Crawler - High Pressure Filter Indicator

NUHN15000050031

Exhibit 2037
Bazooka v. Nuhn - IPR2024-00098
Page 43 of 61

Crawler - Gear Oil Cooler Assembly

104-415

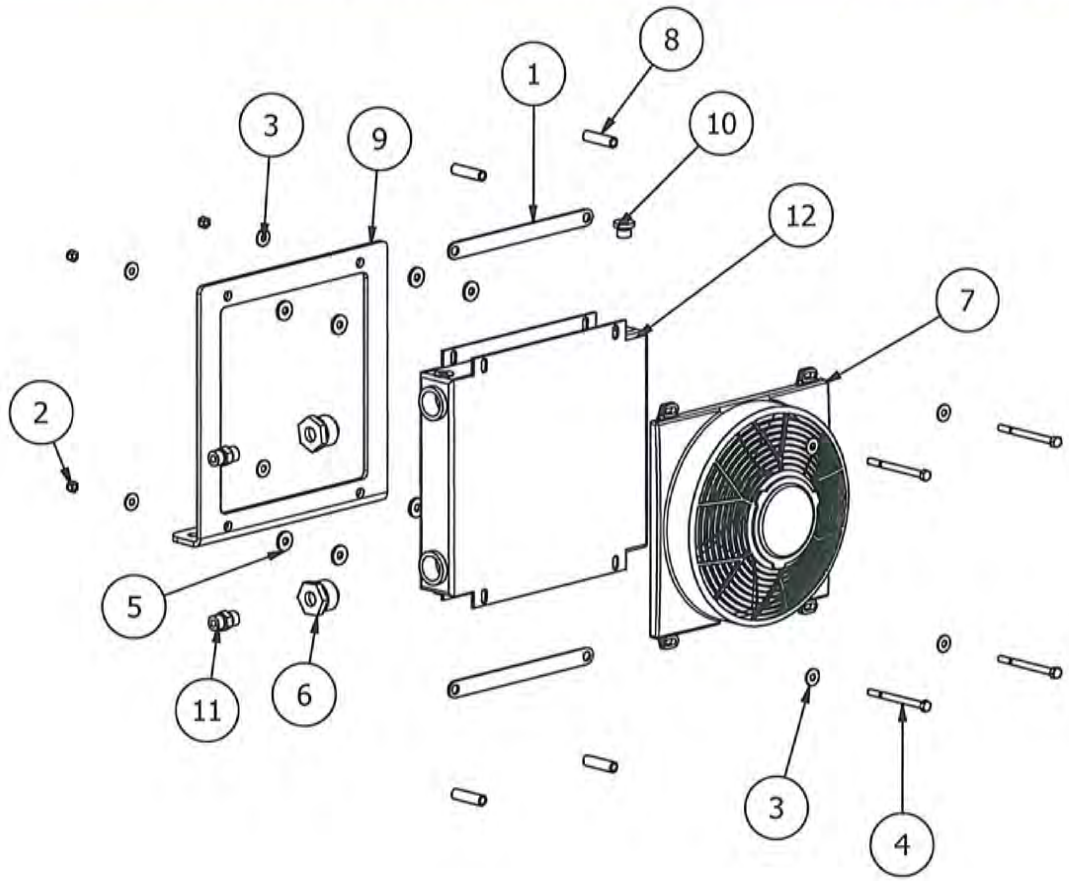

PARTS LIST

ITEM	QTY	PART NUMBER	TITLE
1	2	100-889	Crawler - Mounting Washer for Oil Cooler Radiator
2	4	101-014	Nut - Hex Head - 0.3125"
3	8	101-020	Washer - Flat - 0.3125"
4	4	101-032	Bolt - Hex Head - 0.3125" x 4" - GR5
5	8	103-673	Washer - Neoprene Black - 1"OD x 0.375"ID x 0.125"
6	2	104-182	Hyd. Adaptor - Straight - #16 MBSPP x #8 FP
7	1	104-263	Crawler - Gear Box - Oil Cooler Fan
8	4	104-404	Crawler - Oil Cooler Spacer
9	1	104-436	Crawler - Mount for Gear Box - Oil Cooler
10	1	104-440	Hyd. Fitting - 0.5" Straight Hex Socket Plug
11	2	104-441	Hyd. Adaptor - Straight - #8 MP x #8 MORS
12	1	104-489	Crawler - Hydraulic - Gearbox Cooler Element

Crawler - Hydraulic Oil Cooler Assembly | 104-411

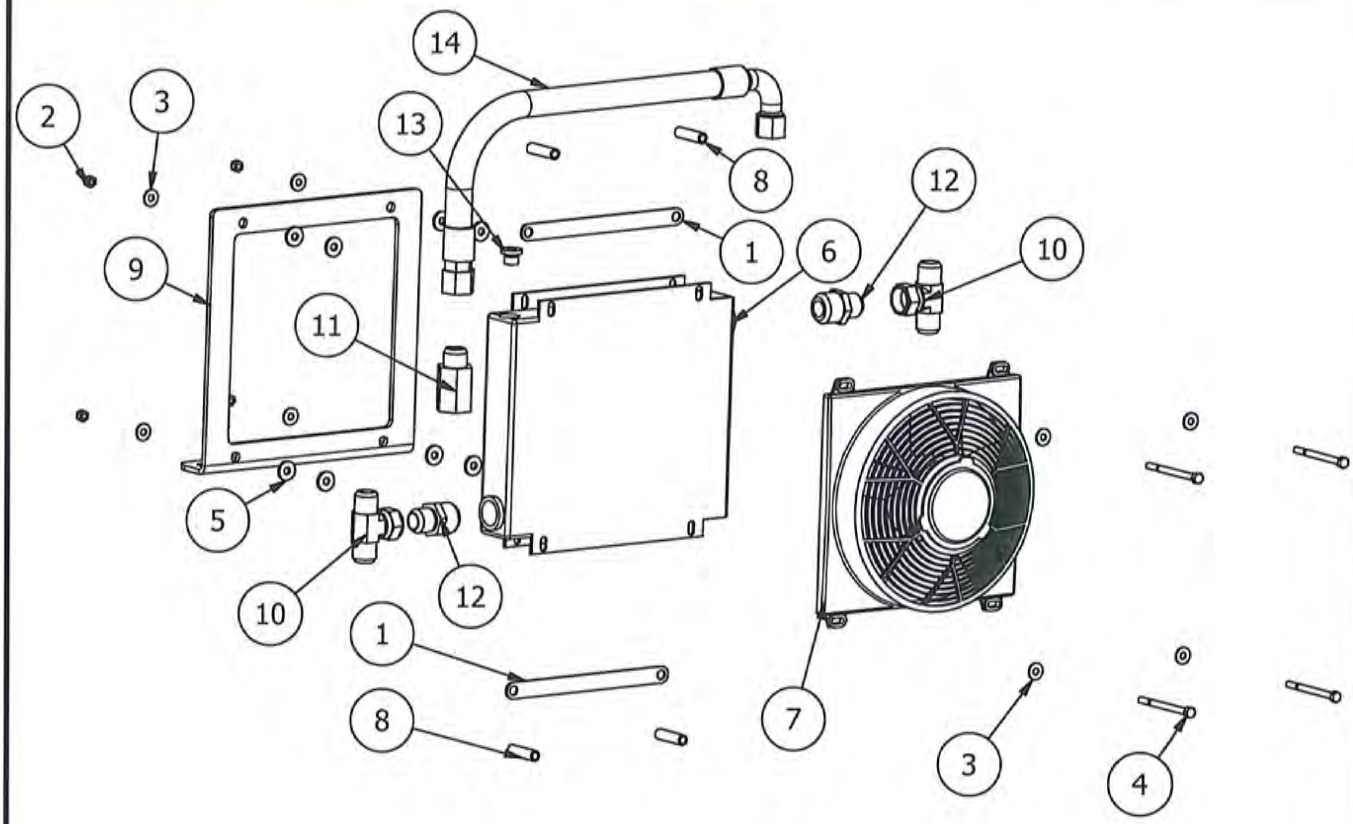

PARTS LIST

ITEM	QTY	PART NUMBER	TITLE
1	2	100-889	Crawler - Mounting Washer for Oil Cooler Radiator
2	4	101-014	Nut - Hex Head - 0.3125"
3	8	101-020	Washer - Flat - 0.3125"
4	4	101-032	Bolt - Hex Head - 0.3125" x 4" - GR5
5	8	103-673	Washer - Neoprene Black - 1"OD x 0.375"ID x 0.125"
6	1	104-037	Crawler - Hydraulic - Cooler Element
7	1	104-263	Crawler - Gear Box - Oil Cooler Fan
8	4	104-404	Crawler - Oil Cooler Spacer
9	1	104-436	Crawler - Mount for Gear Box - Oil Cooler
10	2	104-437	Hyd. Adaptor - Tee - #16 MJ x #16 MJ x #16 FJX
11	1	104-438	Hyd. Fitting - Check Valve (1916FF-65)
12	2	104-439	Hyd. Adaptor - Straight - #16 MBSPP x #16 MP
13	1	104-440	Hyd. Fitting - 0.5" Straight Hex Socket Plug
14	1	104-538	Crawler - Hydraulic Oil Cooler Hose #119

Crawler - Belt Tensioner Assembly

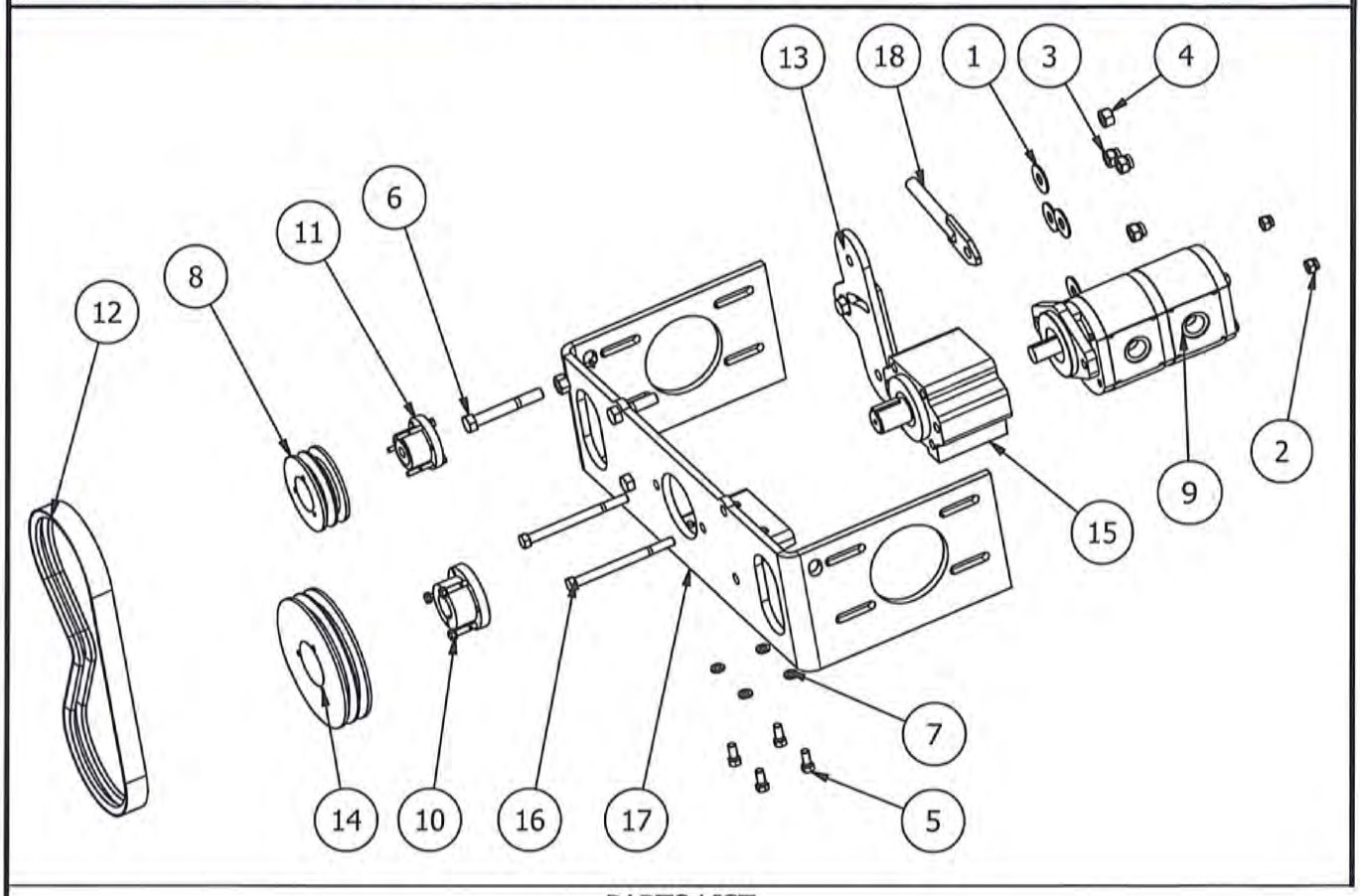

PARTS LIST

ITEM	QTY	PART NUMBER	TITLE
1	4	100-899	Washer - Flat - 0.625"
2	2	100-904	Nut - Nylock - 0.5"
3	3	100-905	Nut - Nylock - 0.625"
4	2	101-018	Nut - 0.625" - GR5
5	4	101-047	Bolt - Hex Head - 0.4375" x 1" - GR5
6	1	101-064	Bolt - Hex Head - 0.625" x 4.5" - GR5
7	4	101-186	Washer - Lock - 0.4375"
8	1	103-006	Crawler - Pulley 5V 465 SDS
9	1	104-032	Crawler - Hydraulic Multi Pump PLP30.2750
10	1	104-118	Crawler - Bushing Sheave 2 5V 800K Martin
11	1	104-120	Crawler - Bushing 0.625" SD-BB Martin Idler
12	1	104-206	Crawler - 2/5VX 530 Goodyear Banded Wedge Belt
13	1	104-533	Crawler - Belt Tensioner - Pulley Mount
14	1	104-278	Crawler - Martin Pulley 2 5V 800SK
15	1	104-338	Overhung Load Adaptor
16	2	104-340	Bolt - Hex Head - 0.5" x 6.5" - GR5
17	1	104-405	Crawler - Belt Tensioner Mount Main Frame
18	1	104-408	Crawler - Belt Tensioner - Rod Only

Crawler - Belt Tensioner Kit | 104-237

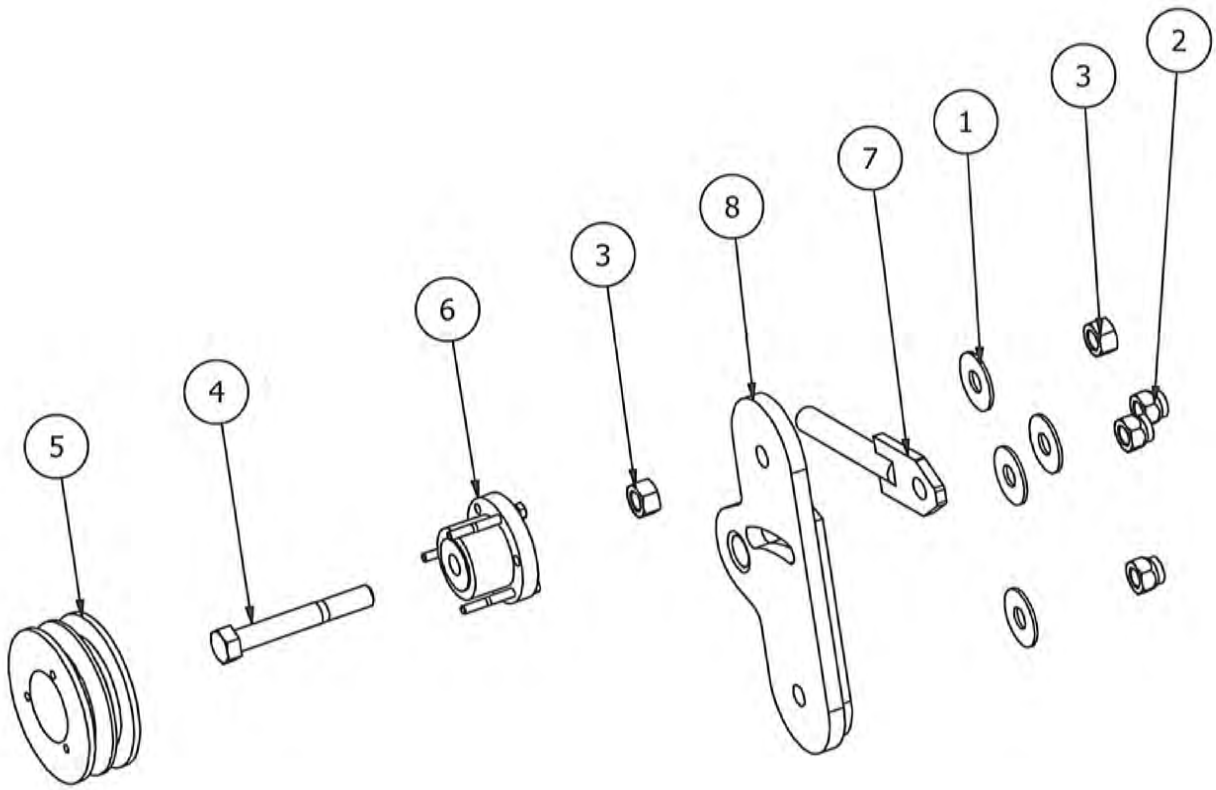

PARTS LIST

ITEM	QTY	PART NUMBER	TITLE
1	4	100-899	Washer - Flat - 0.625"
2	3	100-905	Nut - Nylock - 0.625"
3	2	101-018	Nut - 0.625" - GR5
4	1	101-064	Bolt - Hex Head - 0.625" x 4.5" - GR5
5	1	103-006	Crawler - Pulley 5V 465 SDS
6	1	104-120	Crawler - Bushing 0.625" SD-BB Martin Idler
7	1	104-408	Crawler - Belt Tensioner - Rod Only
8	1	104-533	Crawler - Belt Tensioner - Pulley Mount

Crawler - Horizontal Drive Line

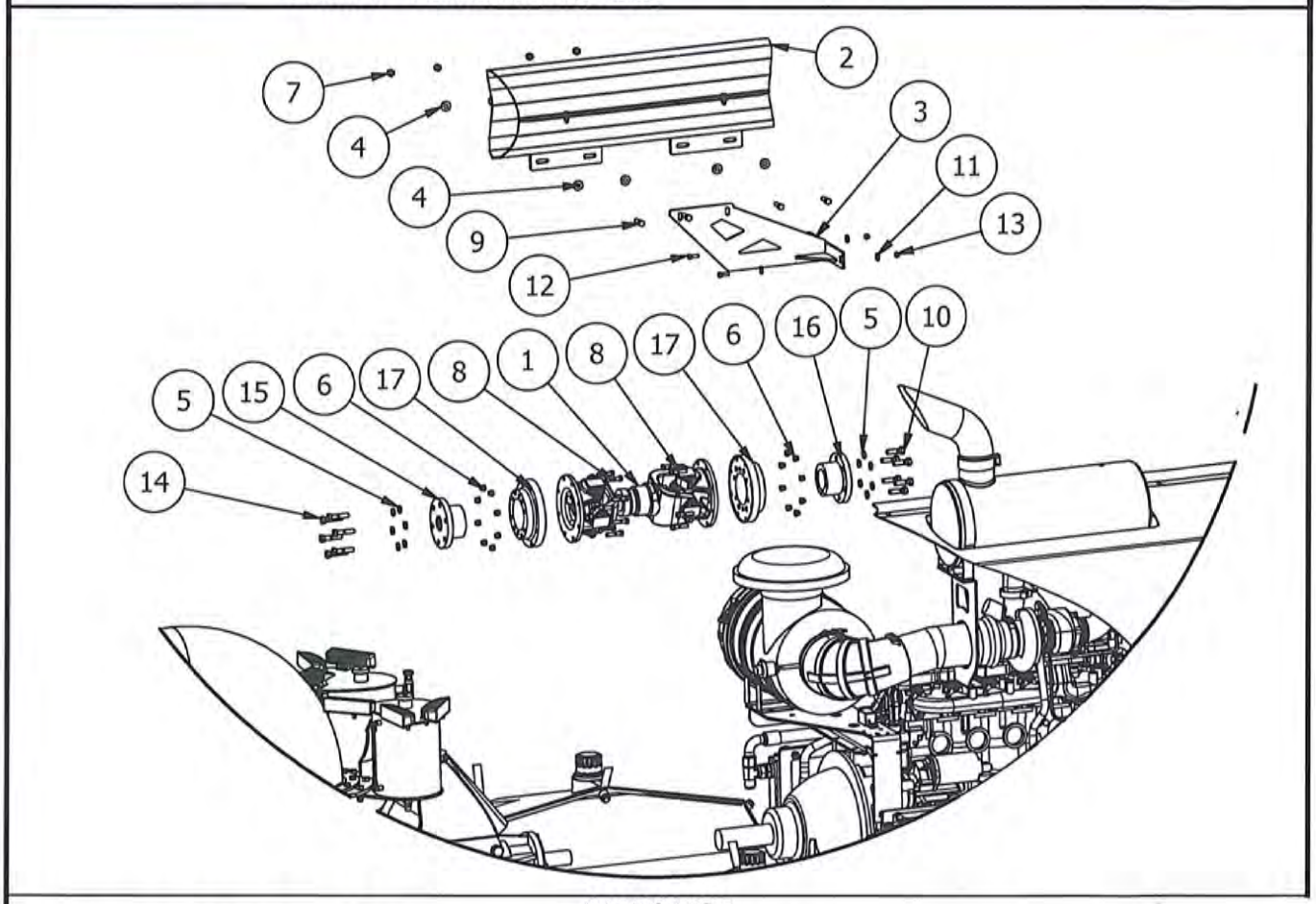

PARTS LIST

ITEM	QTY	PART NUMBER	TITLE
1	1	100-729	Crawler - Horizontal Drive Shaft Assembly - 1710 Series
2	1	100-788	Crawler - PTO Shield
3	1	100-801	Crawler - PTO Shield - Front Bracket
4	66	100-897	Washer - Flat - 0.4375"
5	12	100-900	Washer - Lock - 0.5"
6	24	100-902	Nut - Nylock - 0.375"
7	48	100-903	Nut - Nylock - 0.4375"
8	16	100-908	Bolt - Hex Head - 0.375" x 1.75" - GR5
9	20	100-910	Bolt - Hex Head - 0.4375" x 1.5" - GR5
10	6	100-915	Bolt - Hex Head - 0.5" x 1.75" - GR5
11	26	101-020	Washer - Flat - 0.3125"
12	9	101-026	Bolt - Hex Head - 0.3125" x 1" - GR5
13	24	101-189	Nut - Nylock - 0.3125"
14	6	104-319	Bolt - Hex Head - 0.5" x 2.25" - GR5
15	1	104-680	Crawler - Taper Lock Bushing - Spline (Gear Box)
16	1	104-681	Crawler - Taper Lock Bushing - Keyway (Engine)
17	2	104-682	Crawler - E Taper Lock Female to 1710

Crawler - PTO Shield	100-788

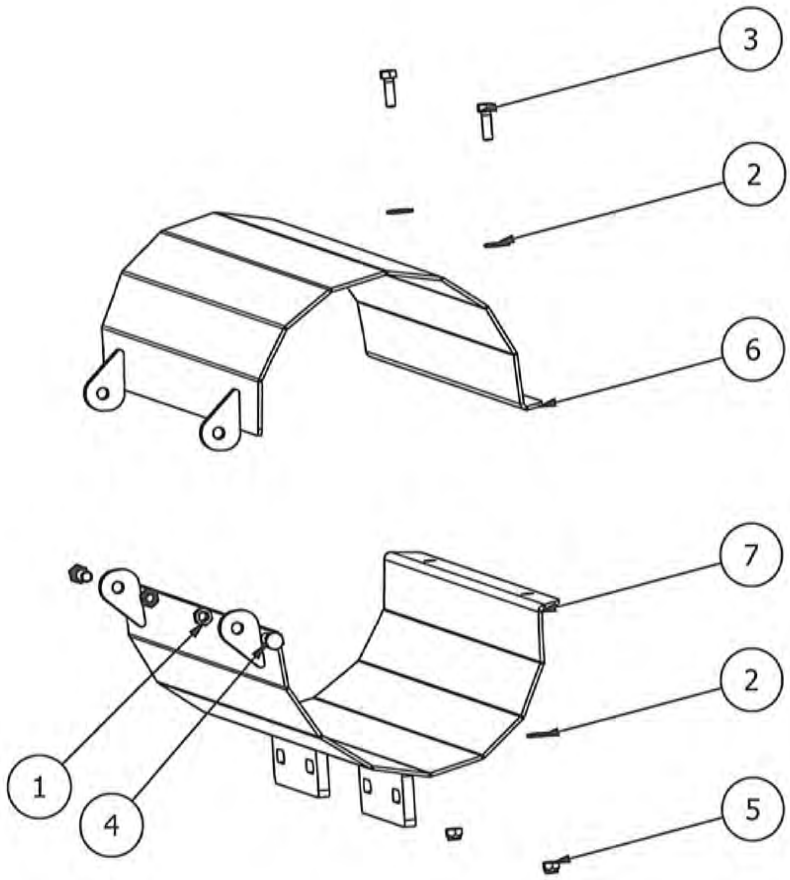

PARTS LIST

ITEM	QTY	PART NUMBER	TITLE
1	2	100-902	Nut - Nylock - 0.375"
2	4	101-020	Washer - Flat - 0.3125"
3	2	101-026	Bolt - Hex Head - 0.3125" x 1" - GR5
4	2	101-035	Bolt - Hex Head - 0.375" x 1.5" - GR5
5	2	101-189	Nut - Nylock - 0.3125"
6	1	104-580	Crawler - PTO Shield - Top Cover
7	1	104-581	Crawler - PTO Shield - Bottom Cover

Crawler - Horizontal Drive Shaft Assembly - 1710 Series | 100-729

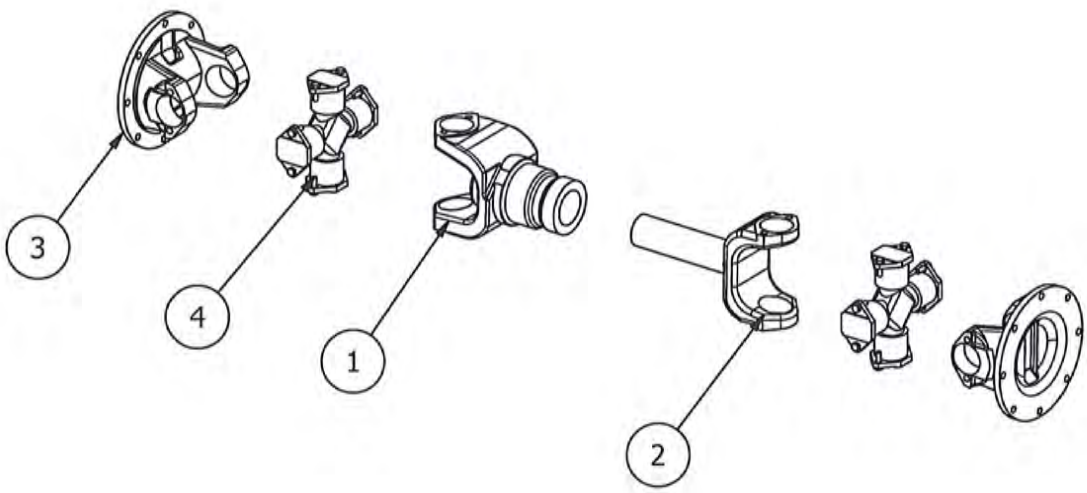

PARTS LIST

ITEM	QTY	PART NUMBER	TITLE
1	1	104-576	Crawler - 1710 Series Drive Shaft - Outer / Slip Yoke
2	1	104-577	Crawler - 1710 Series Drive Shaft - Inner / Yoke Shaft
3	2	104-578	Crawler - 1710 Series Drive Shaft - Flange Yoke
4	2	104-579	Crawler - 1710 Series Drive Shaft - Cross Kit

Crawler - Pump Module	100-773	

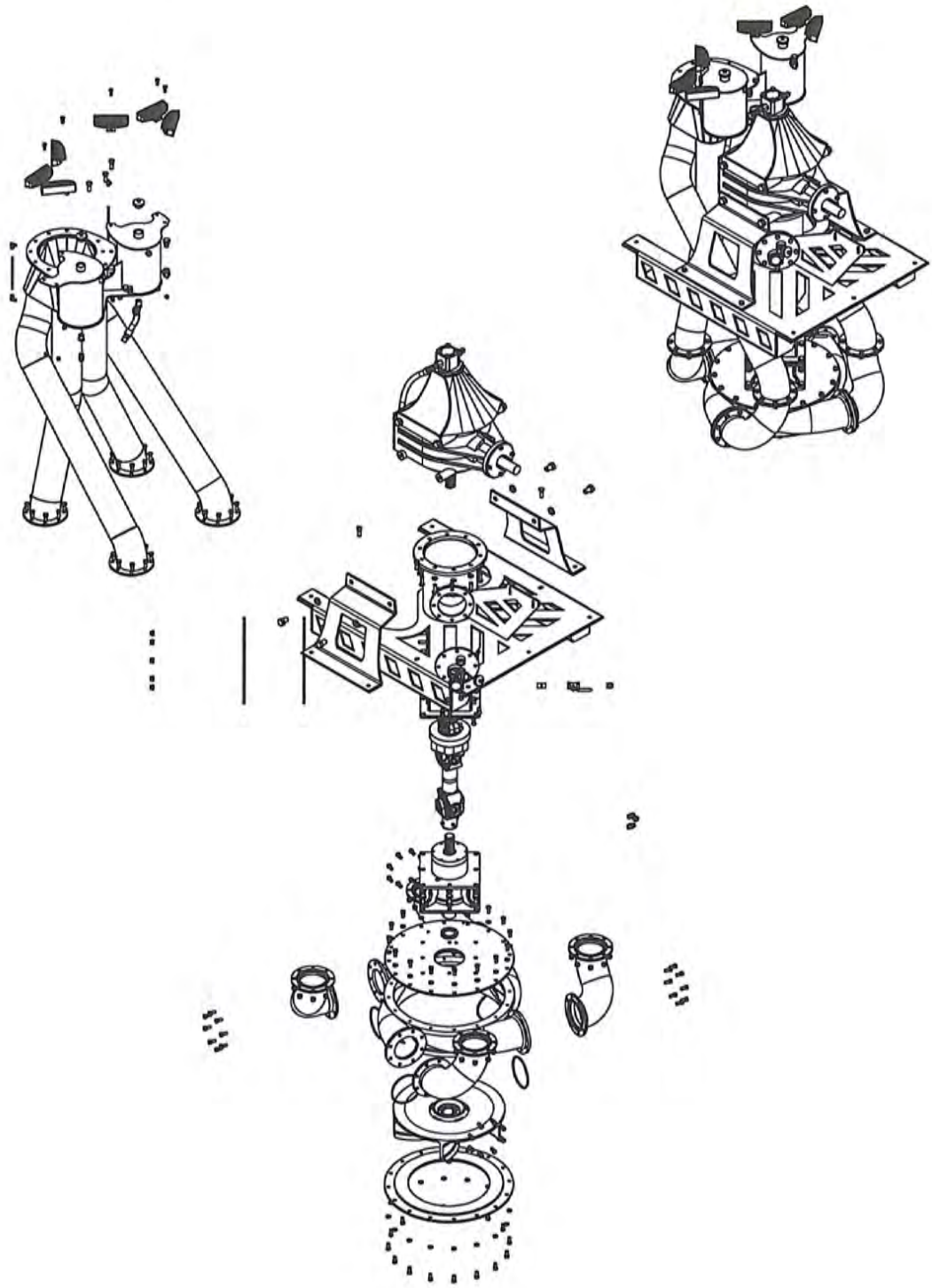

Crawler - Pump Module Detail A	100-773

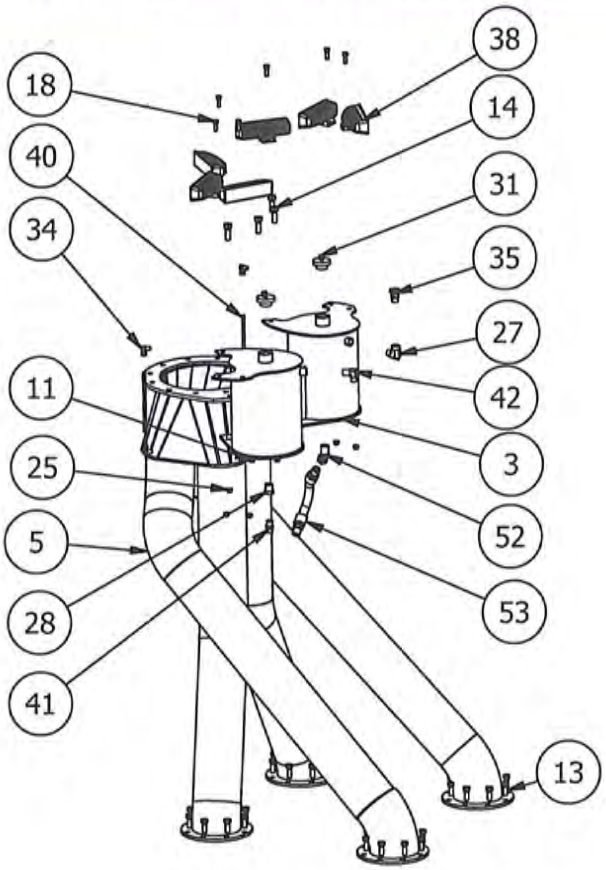

PARTS LIST

ITEM	QTY	PART NUMBER	TITLE
3	1	100-798	Crawler - Dual Oil Tanks with Light Bracket
5	1	100-831	Crawler - Quad Port Header Assembly
11	14	100-904	Nut - Nylock - 0.5"
13	40	100-909	Bolt - Hex Head - 0.4375" x 1.25" - GR5
18	6	101-026	Bolt - Hex Head - 0.3125" x 1" - GR5
25	6	101-189	Nut - Nylock - 0.3125"
27	1	101-538	Hyd. Adaptor - 90° Elbow - #8 FPX x #8 MP
28	1	101-548	Hyd. Adaptor - Straight - #6 FP x #8 MJ
31	3	102-384	Oil Fill Cap with Hooded Breather
34	4	103-749	Hyd. Adaptor - 0.25" Ferrule - Compression Sleeve - Brass
35	1	103-809	Hyd. Fitting - 0.375" NPT Hooded Breather Plug
38	6	104-173	Crawler - Headlight - LED Rectangular
40	2	104-399x0.6	Tube Semi Rigid - Nylon 0.25"OD - 7"
41	1	104-448	Hyd. Adaptor - Straight - #6 MP x #6 MORS
42	1	104-451	Hyd. Adaptor - 90° Elbow - #6 MP x #6 MORS
52	1	104-530	Hyd. Adaptor - 90° Elbow - #6 FPX x #6 MP
53	1	104-537	Gear Box to Oil Tank Line

Crawler - Pump Module Detail B | 100-773

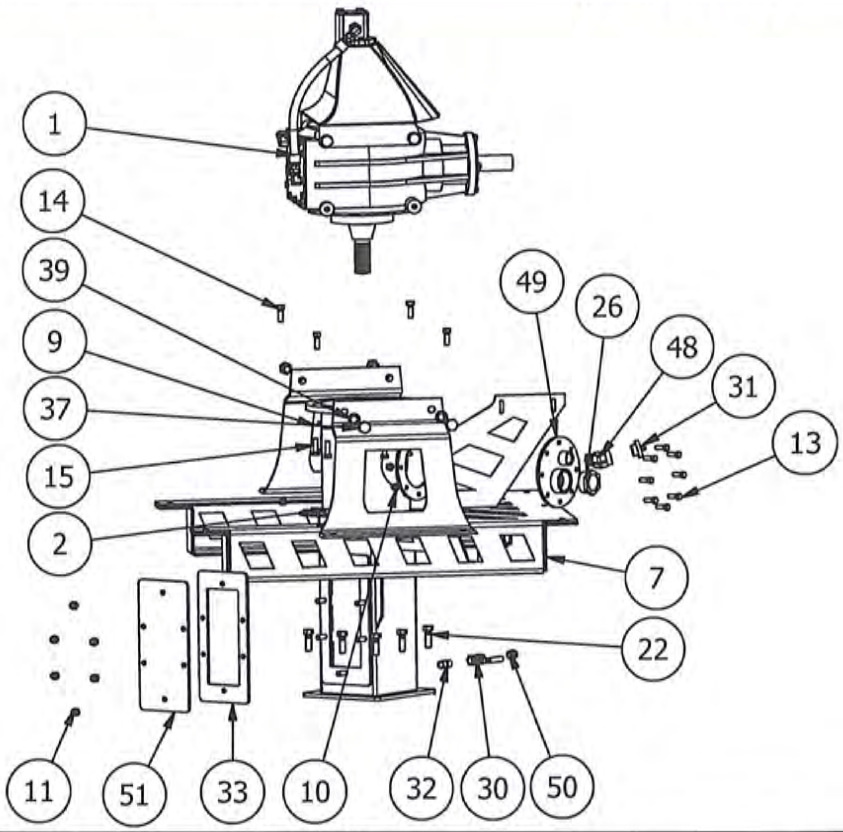

PARTS LIST

ITEM	QTY	PART NUMBER	TITLE
1	1	100-787	Crawler - Gear Box Assembly
2	2	100-797	Gear Box Mounting Bracket
7	1	100-861	Crawler - Pump Mount
9	10	100-897	Washer - Flat - 0.4375"
10	46	100-903	Nut - Nylock - 0.4375"
14	9	100-914	Bolt - Hex Head - 0.5" x 1.5" - GR5
15	10	100-924	Bolt - Hex Head - M12 x 40 - 8.8
22	8	101-059	Bolt - Hex Head - 0.625" x 2" - GR5
26	1	101-449	Sight Glass - 2" Complete
30	1	102-163	Ball Valve - Brass - 0.5"
31	3	102-384	Oil Fill Cap with Hooded Breather
32	1	102-754	Pipe - Nipple - 0.5" x 1.5"
33	1	103-513	Gasket - Clean-Out Door - 15" x 7" x 0.25" - 6 Hole
37	4	104-116	Bolt - Hex Head - M20 x 30 - 8.8
39	4	104-208	Washer - Lock - M20
48	1	104-518	Hyd. Adaptor - 45° Elbow - #16 MP x #16 FP
49	1	104-519	Crawler - Sight Glass Mount
50	1	104-523	Pipe - Plug - 0.5" Hex Head
51	1	104-527	Clean-Out Door - 15" x 7" x 0.25" - 6 Hole

Crawler - Pump Module Detail C

100-773

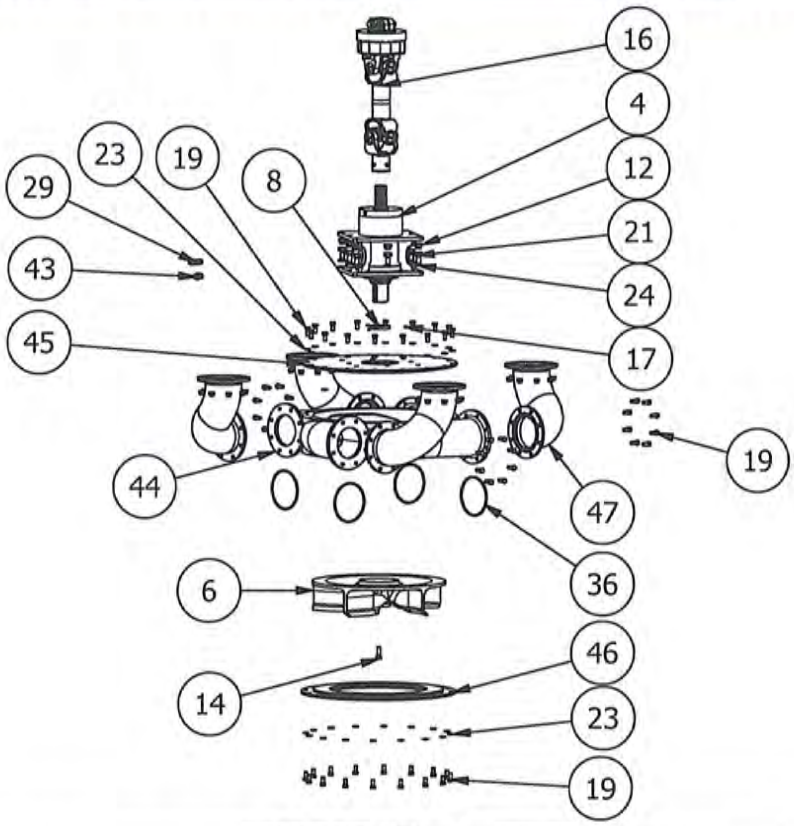

PARTS LIST

ITEM	QTY	PART NUMBER	TITLE
4	1	100-820-3	Mech-TC Seal and Bearing System - 2.25" Complete
6-1	1	100-841-2	Crawler - Impeller - 20.5"OD - 2.25" Keyed Bushing - 5 Blade
6-2	1	100-841-3	Crawler - Impeller - 20.25"OD for Cast Housing - 5 Blade
8	1	100-865	Mech-TC - Retaining Sleeve - 3"OD x 2.25"ID x 0.4"
12	8	100-905	Nut - Nylock - 0.625"
14	9	100-914	Bolt - Hex Head - 0.5" x 1.5" - GR5
16	1	100-951	Crawler - Vertical Shaft with Integrated Clutch - Weasler 55
17	3	100-960	Screw - Socket Head Set - 0.25" x 0.25" Alloy - Black Oxide
19	64	101-047	Bolt - Hex Head - 0.4375" x 1" - GR5
23	32	101-186	Washer - Lock - 0.4375"
24	8	101-187	Washer - Lock - 0.625"
29	1	101-567	Hyd. Adaptor - 90° Elbow - #8 FPX x #8 MP
36	4	103-968	O-Ring - #359 DAE Buna - 6.125"OD x 5.75"ID
21	8	104-427	Bolt - Hex Head - 0.625" x 1.25" - GR5
43	1	104-471	Hyd. Adaptor - Straight - #6 MORS x #8 MOR
44	1	104-500	Crawler - Quad Port Cast - Housing - Finished
45	1	104-501	Crawler - Quad Port Cast - Top Cover
46	1	104-502	Crawler - Quad Port Cast - Inlet Cover 15" Hole
47	4	104-504	Crawler - Quad Port Header Adaptor Pipe

Crawler - Cast Housing Upgrade Kit	104-499

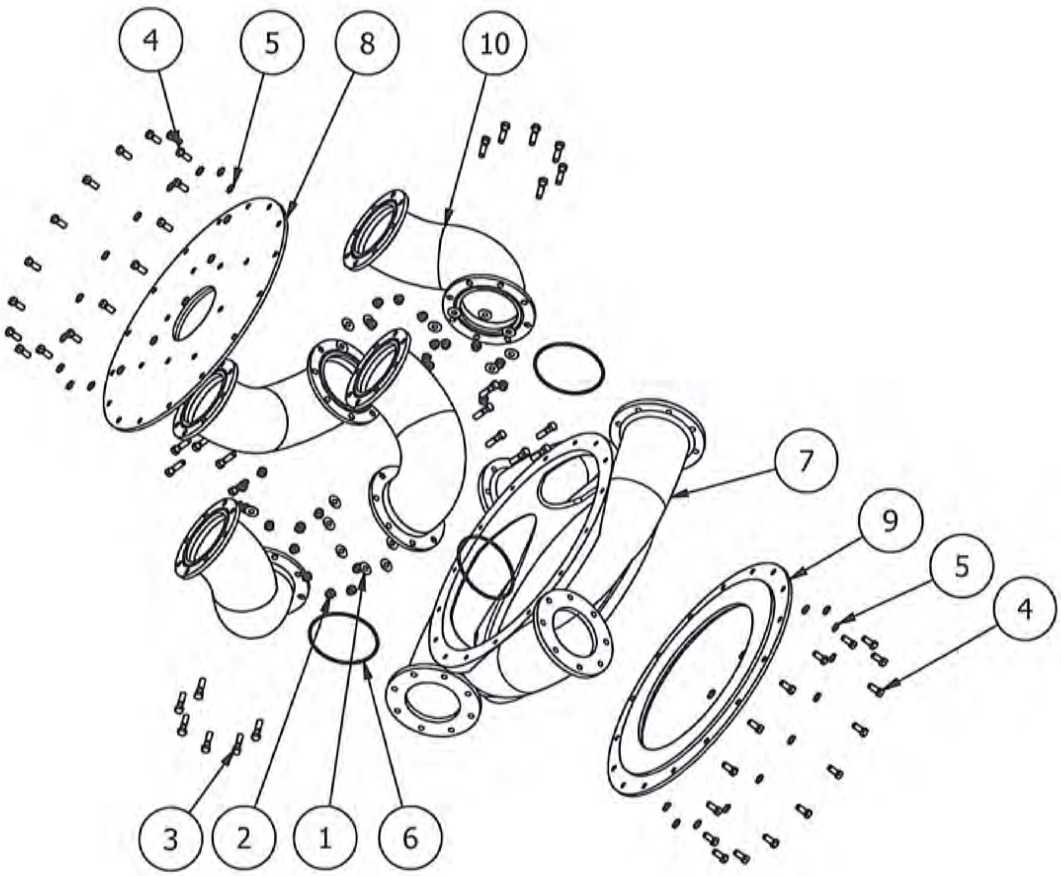

PARTS LIST

ITEM	QTY	PART NUMBER	TITLE
1	24	100-897	Washer - Flat - 0.4375"
2	24	100-903	Nut - Nylock - 0.4375"
3	24	100-911	Bolt - Hex Head - 0.4375" x 1.75" - GR5
4	32	101-047	Bolt - Hex Head - 0.4375" x 1" - GR5
5	32	101-186	Washer - Lock - 0.4375"
6	4	103-968	O-Ring - #359 DAE Buna - 6.125"OD x 5.75"ID
7	1	104-500	10" Quad Port Housing Casting Finished
8	1	104-501	Crawler - Quad Port Cast - Top Housing Cover
9	1	104-502	Crawler - Quad Port Cast - Inlet Cover 15" Hole
10	4	104-504	Crawler - Quad Port Header Adaptor Pipe

NUHN15000050043

Exhibit 2037
Bazooka v. Nuhn - IPR2024-00098
Page 55 of 61

Crawler - Gear Box Assembly

100-787

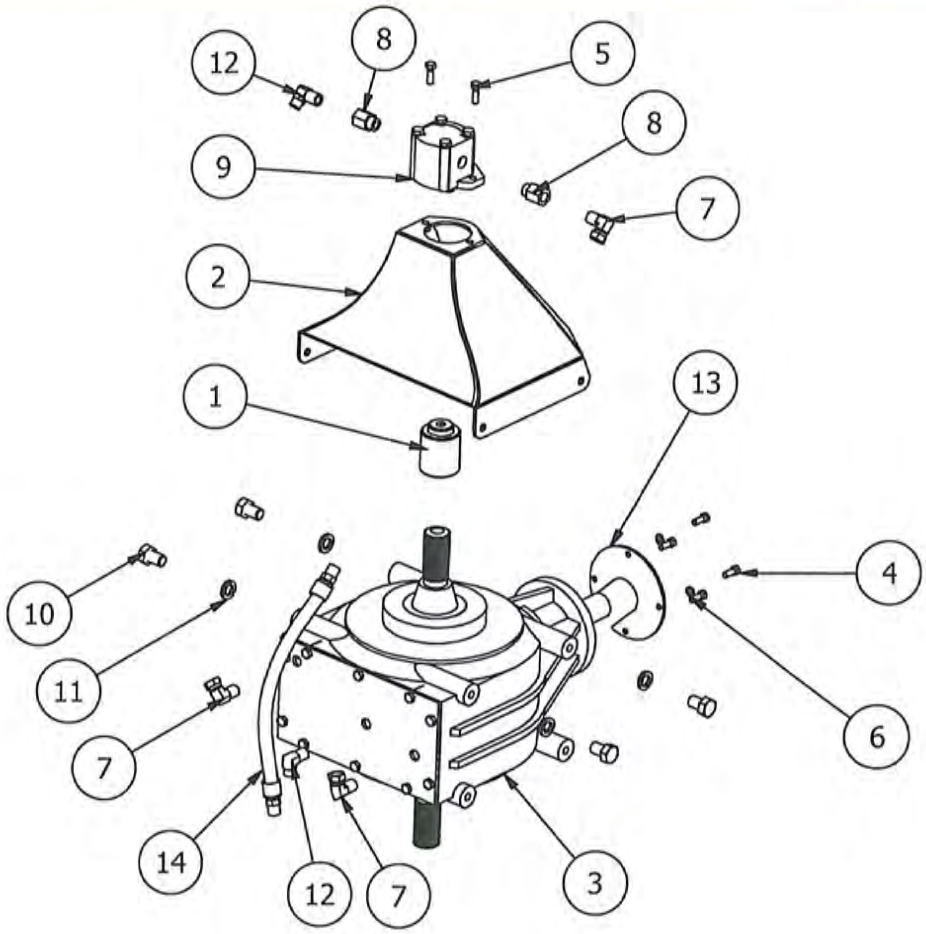

PARTS LIST

ITEM	QTY	PART NUMBER	TITLE
1	1	100-713	Crawler - Oil Cooler Shaft Adaptor
2	1	100-880	Crawler - Gear Box Top Shield
3	1	100-950	Crawler - Gear Box - T-332A
4	4	101-021	Bolt - Hex Head - 0.375" x 1" - GR5
5	2	101-034	Bolt - Hex Head - 0.375" x 1.25" - GR5
6	4	101-185	Washer - Lock - 0.375"
7	3	101-567	Hyd. Adaptor - 90° Elbow - #8 FPX x #8 MP
8	2	101-575	Hyd. Adaptor - Straight - #8 FP x #10 MOR
9	1	104-035	Crawler - Hydraulic - Pump PLP20.8D-031S1-LOC/DC
10	4	104-116	Bolt - Hex Head - M20 x 30 - 8.8
11	4	104-208	Washer - Lock - M20
12	2	104-452	Hyd. Adaptor - 90° Elbow - #8 MP x #8 MORS
13	1	104-497	Gear Box Seal Guard
14	1	104-508	Crawler - Gear Box Suction Line - 15-3/4"

Crawler - Gear Box - T-332A	100-950

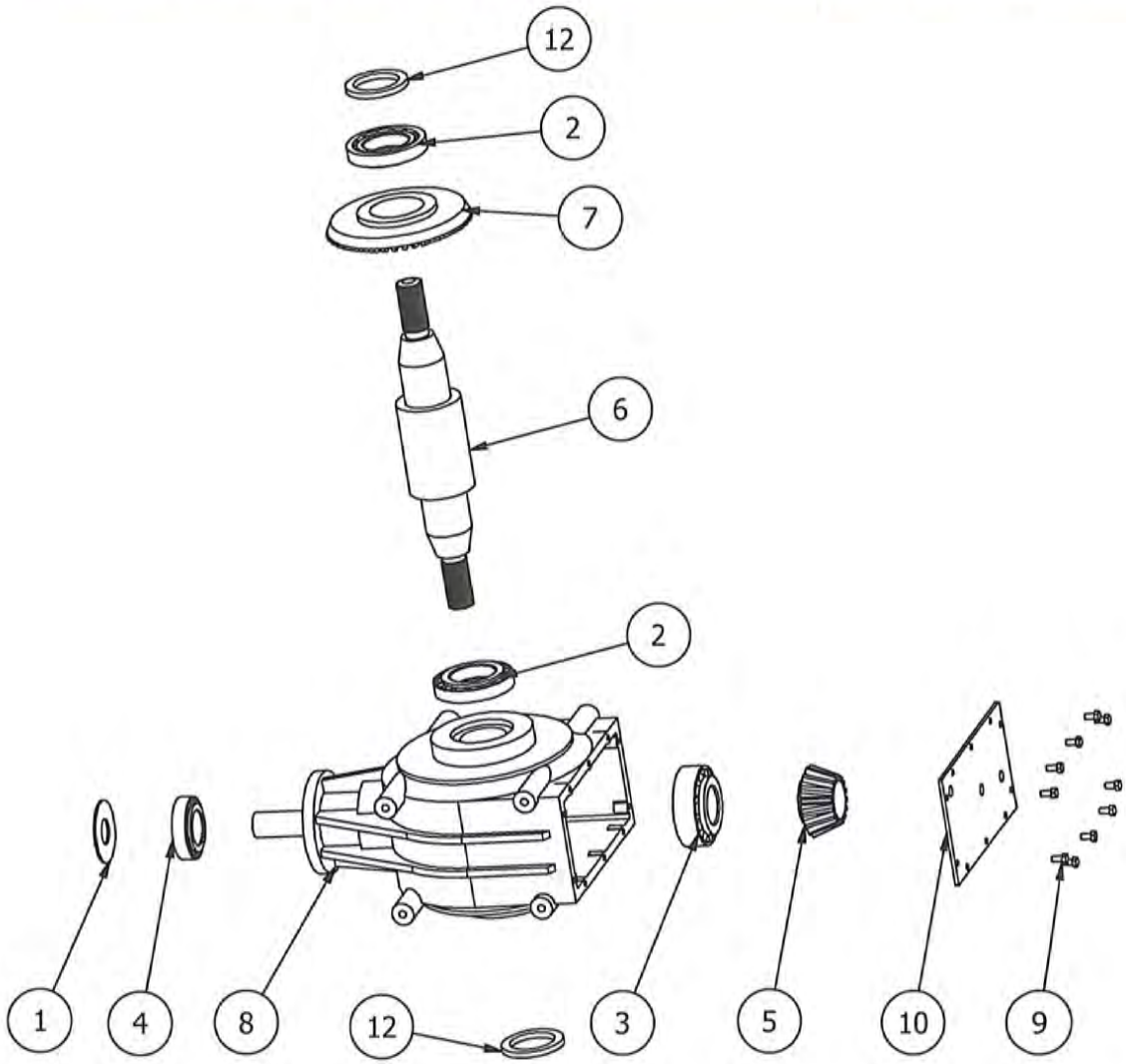

PARTS LIST

ITEM	QTY	PART NUMBER	TITLE
1	1	104-260	Crawler - Gear Box #332 - Oil Seal, 50-110-12-TC
2	2	104-509	Bearing - Tapered Roller - 30216
3	1	104-510	Bearing - Tapered Roller - 32313
4	1	104-511	Bearing - Tapered Roller - 32212
5	1	104-512	Crawler - Gear Box T-332A - Pinion Shaft
6	1	104-513	Crawler - Gear Box T-332A - Shaft 1"
7	1	104-514	Crawler - Gear Box T-332A - Crown Wheel 240 M7.75
8	1	104-515	Crawler - Gear Box T-332A - Casing
9	10	104-516	Bolt - Hex Head - M10 x 20 - 8.8
10	1	104-517	Crawler - Gear Box T-332A - Cover
12	2	104-754	Crawler - Gear Box T-332A - Double Lip Seal 80-110-10

NUHN15000050045

Exhibit 2037
Bazooka v. Nuhn - IPR2024-00098
Page 57 of 61

Mech-TC Seal and Bearing System - 2.25" Complete | 100-820-3

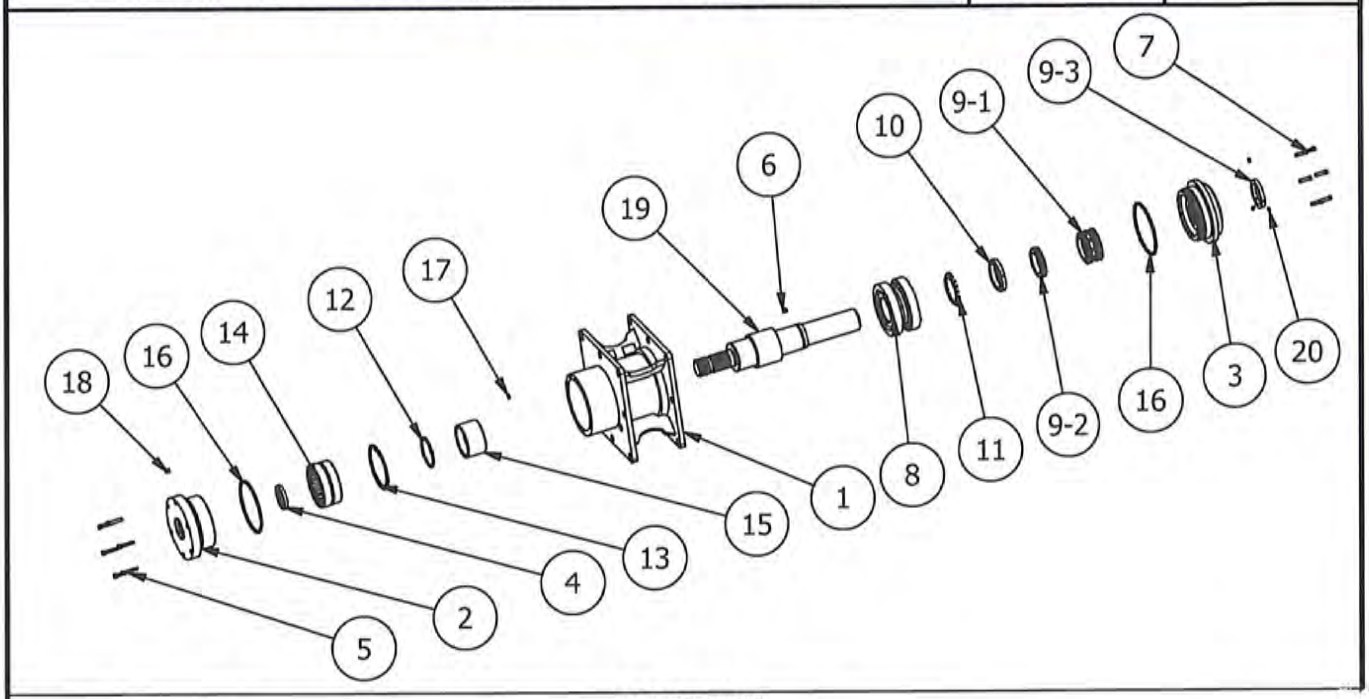

PARTS LIST

ITEM	QTY	PART NUMBER	TITLE
1	1	100-864	Mech-TC - Housing Only - 2.25"
2	1	100-869	Mech-TC - Seal Retaining Cap - 2.25"
3	1	100-870	Mech-TC - Seal End Cap - 2.25"
4	1	100-936	Lip Seal - 17381 - 1.75" x 2.502" x 0.313"
5	6	102-128	Bolt - Socket Head - 0.25" x 1.5" - GR8 Black Oxide
6	1	103-312	Screw - Set - 0.375" x 0.375" Hex Drive - Black Oxide
7	6	103-944	Bolt - Socket Head - 0.25" x 1" - GR8 Black Oxide
8	2	104-167	Bearing - Tapered Roller - 31313 - Matched Set - Face to Face
9	1	104-175	Mech-TC - Seal Type 2 - 2.25"
9-1	1	104-721	Mech-TC - Mechanical Seal - 2.25"
9-2	1	104-722	Mech-TC - Sealing Surface - 2.25"
9-3	1	104-723	Mech-TC - Seal Locking Clamp - 2.25"
10	1	104-177	Bearing Locknut - N-13 REM
11	1	104-178	Bearing Lockwasher - TW113 (N-13)
12	1	104-179	Retaining Ring - External - 3"
13	1	104-180	Retaining Ring - Internal - 4.5"
14	1	104-219	Mech-TC - 2.25" - Needle Roller Bearing - BR567232
15	1	104-220	Mech-TC - 2.25" - Needle Roller Bearing Race - LRB485632
16	2	104-268	O-Ring - #354 DAE Buna 5.5"OD x 5.25"ID
17	1	104-348	O-Ring - #2-108
18	1	104-358	Hyd. Fitting - Plug Straight Hex Socket - 0.125" - Brass 219-2
19	1	104-376	Mech-TC - Shaft - 2.25"
20	3	104-660	Screw - Set - 0.25" x 0.3125" Hex Drive - Black Oxide

Crawler - Battery Box Assembly | 100-818

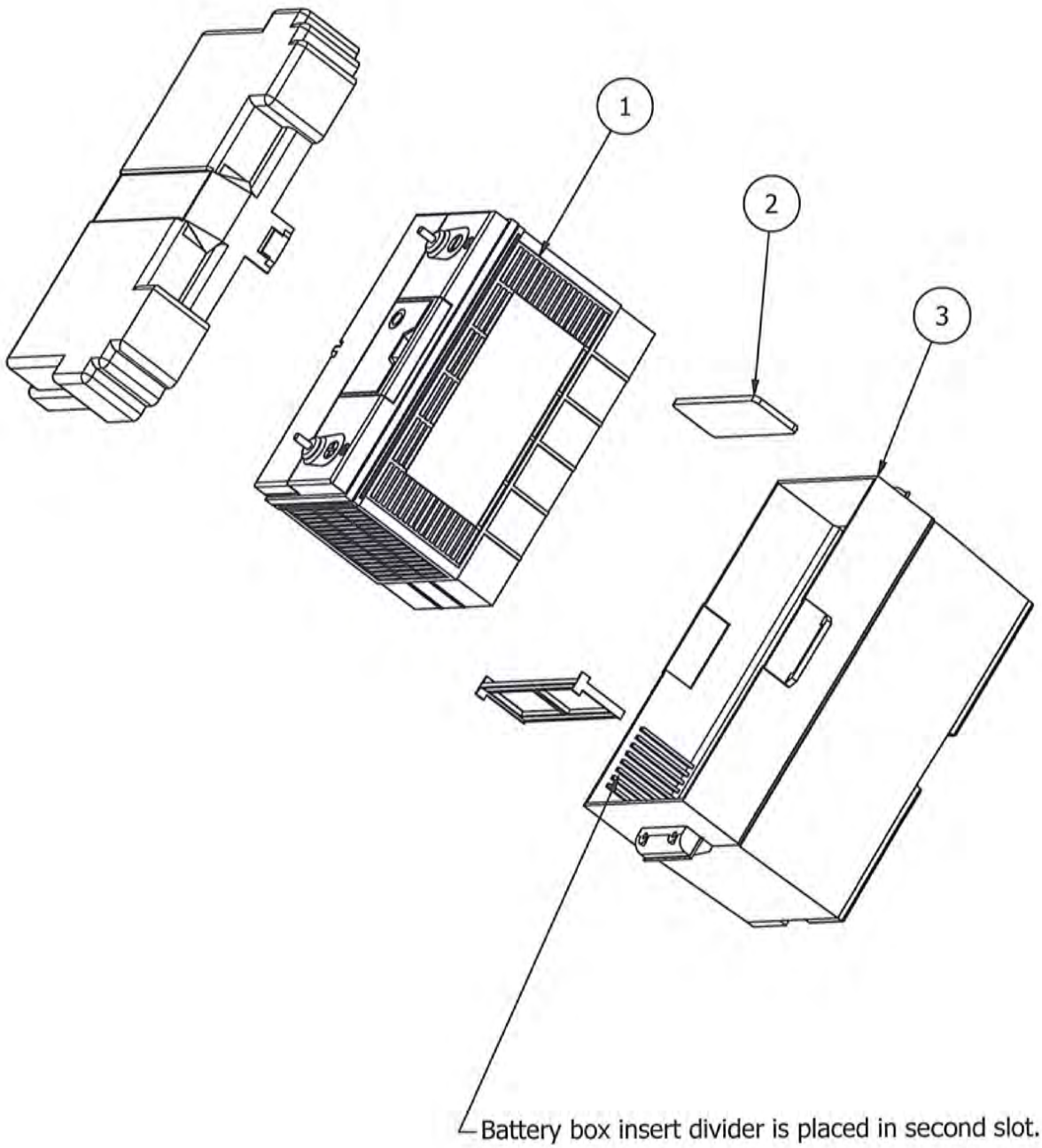

PARTS LIST

ITEM	QTY	PART NUMBER	TITLE
1	1	104-201	Crawler - Battery - Crown
2	1	100-948	Crawler - Battery Box Gasket Spacer 7" x 2.25"
3	1	104-203	Battery - Quick Cable - Box - Adjustable

Crawler - Giga Remote with Charger	100-955	

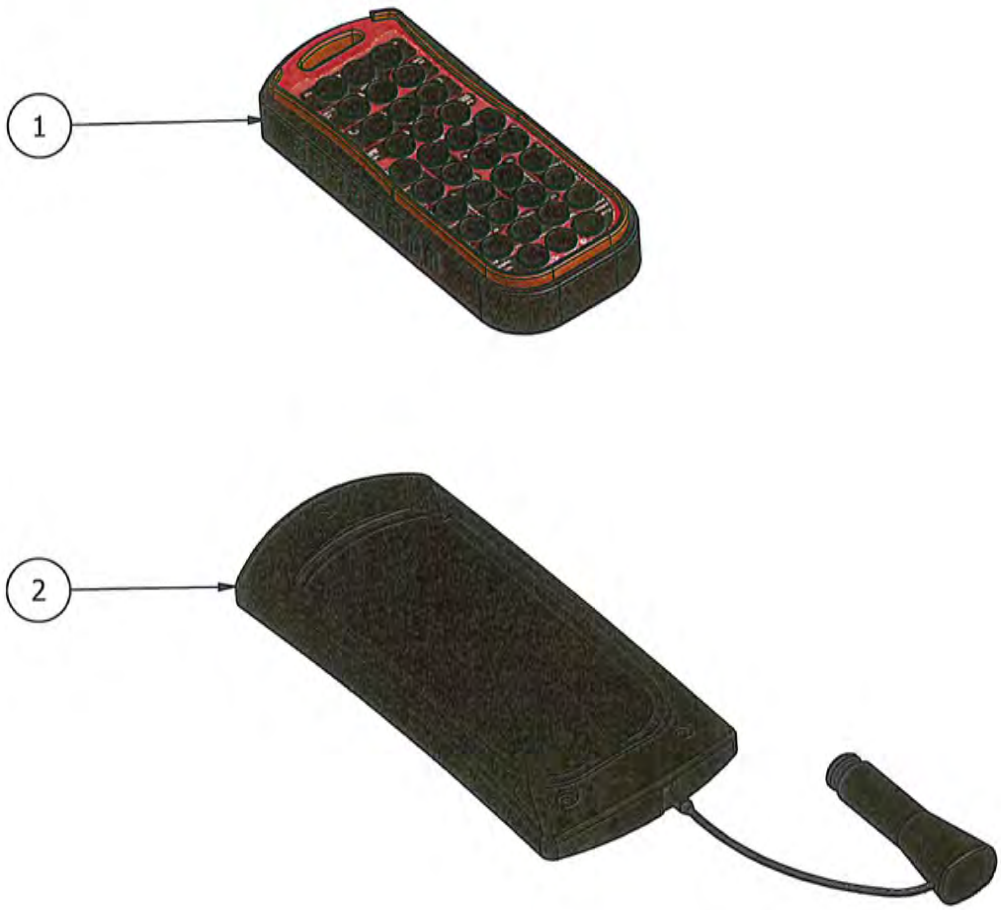

PARTS LIST

ITEM	QTY	PART NUMBER	TITLE
1	1	103-913	Crawler - Remote - Giga
2	1	103-966	Crawler - Remote Charger - Giga

Crawler Option - Front Bumper 8" Discharge Assembly | 100-766

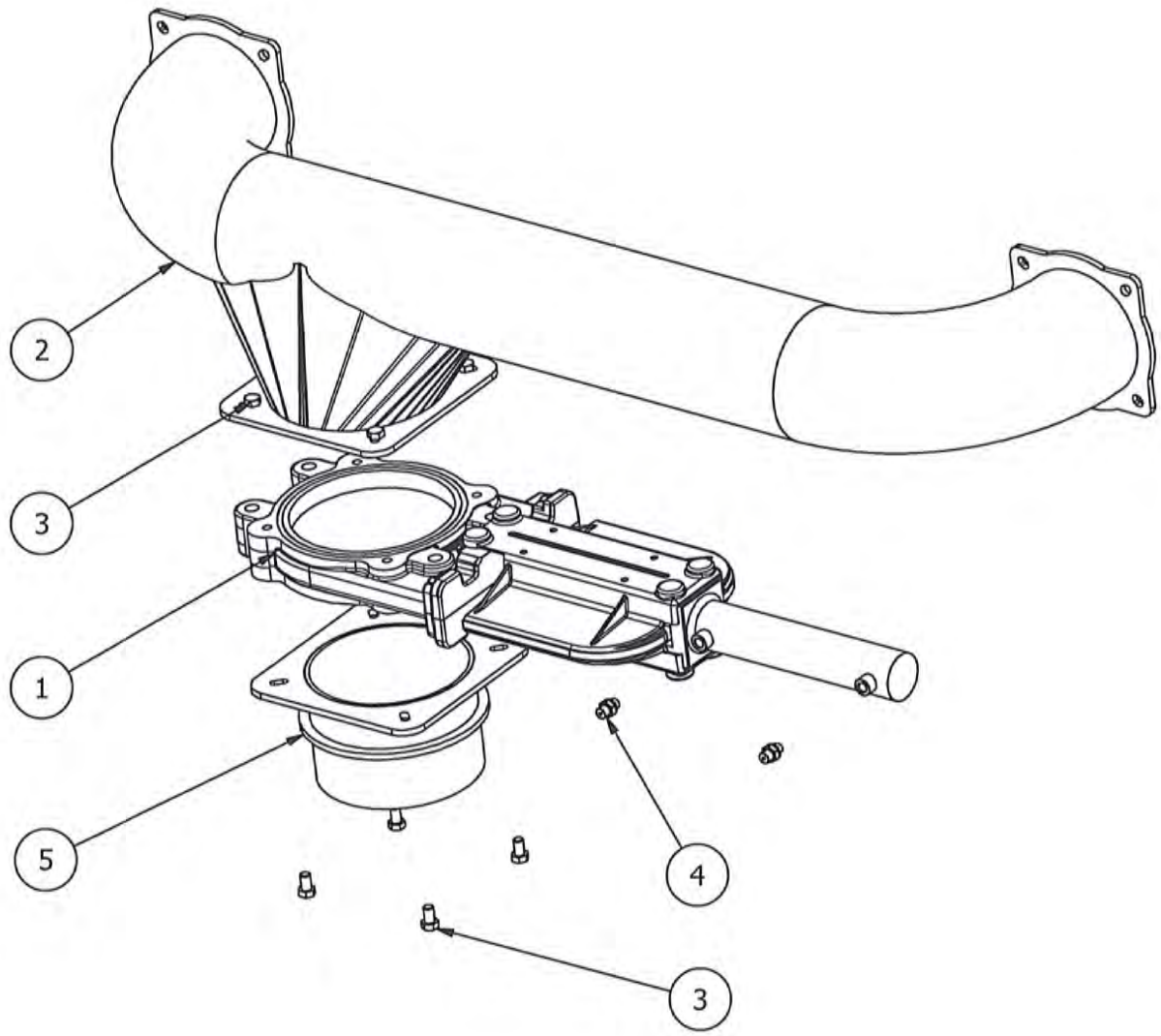

PARTS LIST

ITEM	QTY	PART NUMBER	TITLE
1	1	100-722	Stem Valve - 8" Cast Iron with SS Gate - Gladio with Cylinder
2	1	100-819	Crawler Option - Front Bumper 8" Discharge
3	8	100-923	Bolt - Hex Head - M12 x 20 - 8.8
4	2	104-444	Hyd. Adaptor - Straight - #4 MBSPP x #4 MORS
5	1	104-608	Flange - 8" Male to 10" Square Flange

NUHN15000050049

Exhibit 2037
Bazooka v. Nuhn - IPR2024-00098
Page 61 of 61