UNITED STATES PATENT AND TRADEMARK OFFICE

UNITED STATES DEPARTMENT OF COMMERCE
United States Patent and Trademark Office
Address: COMMISSIONER FOR PATENTS
P.O. Box 1450
Alexandria, Virginia 22313-1450
www.uspto.gov

APPLICATION NUMBER	FILING or 371(c) DATE	GRP ART UNIT	FIL FEE REC'D	ATTY.DOCKET.NO	TOT CLAIMS	IND CLAIMS
63/040,562	06/18/2020		140	139616.010P		

CONFIRMATION NO. 9357

FILING RECEIPT

24234
SIMMONS PERRINE MOYER BERGMAN PLC
1150 5TH STREET, SUITE 170
CORALVILLE, IA 52241

OC000000117988105

Date Mailed: 06/24/2020

Receipt is acknowledged of this provisional patent application. It will not be examined for patentability and will become abandoned not later than twelve months after its filing date. Any correspondence concerning the application must include the following identification information: the U.S. APPLICATION NUMBER, FILING DATE, NAME OF FIRST INVENTOR, and TITLE OF INVENTION. Fees transmitted by check or draft are subject to collection.

Please verify the accuracy of the data presented on this receipt. If an error is noted on this Filing Receipt, please submit a written request for a corrected Filing Receipt identifying the requested changes, preferably by including a properly marked-up ADS showing the changes with strike-through for deletions and underlining for additions. If you received a "Notice to File Missing Parts" or other Notice requiring a response for this application, please submit any request for correction to this Filing Receipt with your reply to the Notice. When the USPTO processes the reply to the Notice, the USPTO will generate another Filing Receipt incorporating the requested corrections provided that the request is grantable.

Inventor(s)

Phillip Minino, Washington, IA;
Eric Svenby, Washington, IA;

Applicant(s)

Bazooka-Farmstar, Inc., Washington, IA

Power of Attorney:
Christopher Voci--45184

Permission to Access Application via Priority Document Exchange: Yes

Permission to Access Search Results: Yes

Applicant may provide or rescind an authorization for access using Form PTO/SB/39 or Form PTO/SB/69 as appropriate.

If Required, Foreign Filing License Granted: 06/23/2020
The country code and number of your priority application, to be used for filing abroad under the Paris Convention, is **US 63/040,562**
Projected Publication Date: None, application is not eligible for pre-grant publication
Non-Publication Request: No
Early Publication Request: No
**** SMALL ENTITY ****

Title

AMPHIBIOUS AGITATION MACHINE

Statement under 37 CFR 1.55 or 1.78 for AIA (First Inventor to File) Transition Applications: No

PROTECTING YOUR INVENTION OUTSIDE THE UNITED STATES

Since the rights granted by a U.S. patent extend only throughout the territory of the United States and have no effect in a foreign country, an inventor who wishes patent protection in another country must apply for a patent in a specific country or in regional patent offices. Applicants may wish to consider the filing of an international application under the Patent Cooperation Treaty (PCT). An international (PCT) application generally has the same effect as a regular national patent application in each PCT-member country. The PCT process **simplifies** the filing of patent applications on the same invention in member countries, but **does not result** in a grant of "an international patent" and does not eliminate the need of applicants to file additional documents and fees in countries where patent protection is desired.

Almost every country has its own patent law, and a person desiring a patent in a particular country must make an application for patent in that country in accordance with its particular laws. Since the laws of many countries differ in various respects from the patent law of the United States, applicants are advised to seek guidance from specific foreign countries to ensure that patent rights are not lost prematurely.

Applicants also are advised that in the case of inventions made in the United States, the Director of the USPTO must issue a license before applicants can apply for a patent in a foreign country. The filing of a U.S. patent application serves as a request for a foreign filing license. The application's filing receipt contains further information and guidance as to the status of applicant's license for foreign filing.

Applicants may wish to consult the USPTO booklet, "General Information Concerning Patents" (specifically, the section entitled "Treaties and Foreign Patents") for more information on timeframes and deadlines for filing foreign patent applications. The guide is available either by contacting the USPTO Contact Center at 800-786-9199, or it can be viewed on the USPTO website at http://www.uspto.gov/web/offices/pac/doc/general/index.html.

For information on preventing theft of your intellectual property (patents, trademarks and copyrights), you may wish to consult the U.S. Government website, http://www.stopfakes.gov. Part of a Department of Commerce initiative, this website includes self-help "toolkits" giving innovators guidance on how to protect intellectual property in specific countries such as China, Korea and Mexico. For questions regarding patent enforcement issues, applicants may call the U.S. Government hotline at 1-866-999-HALT (1-866-999-4258).

LICENSE FOR FOREIGN FILING UNDER

Title 35, United States Code, Section 184

Title 37, Code of Federal Regulations, 5.11 & 5.15

GRANTED

The applicant has been granted a license under 35 U.S.C. 184, if the phrase "IF REQUIRED, FOREIGN FILING LICENSE GRANTED" followed by a date appears on this form. Such licenses are issued in all applications where the conditions for issuance of a license have been met, regardless of whether or not a license may be required as set forth in 37 CFR 5.15. The scope and limitations of this license are set forth in 37 CFR 5.15(a) unless an earlier

license has been issued under 37 CFR 5.15(b). The license is subject to revocation upon written notification. The date indicated is the effective date of the license, unless an earlier license of similar scope has been granted under 37 CFR 5.13 or 5.14.

This license is to be retained by the licensee and may be used at any time on or after the effective date thereof unless it is revoked. This license is automatically transferred to any related applications(s) filed under 37 CFR 1.53(d). This license is not retroactive.

The grant of a license does not in any way lessen the responsibility of a licensee for the security of the subject matter as imposed by any Government contract or the provisions of existing laws relating to espionage and the national security or the export of technical data. Licensees should apprise themselves of current regulations especially with respect to certain countries, of other agencies, particularly the Office of Defense Trade Controls, Department of State (with respect to Arms, Munitions and Implements of War (22 CFR 121-128)); the Bureau of Industry and Security, Department of Commerce (15 CFR parts 730-774); the Office of Foreign AssetsControl, Department of Treasury (31 CFR Parts 500+) and the Department of Energy.

NOT GRANTED

No license under 35 U.S.C. 184 has been granted at this time, if the phrase "IF REQUIRED, FOREIGN FILING LICENSE GRANTED" DOES NOT appear on this form. Applicant may still petition for a license under 37 CFR 5.12, if a license is desired before the expiration of 6 months from the filing date of the application. If 6 months has lapsed from the filing date of this application and the licensee has not received any indication of a secrecy order under 35 U.S.C. 181, the licensee may foreign file the application pursuant to 37 CFR 5.15(b).

SelectUSA

The United States represents the largest, most dynamic marketplace in the world and is an unparalleled location for business investment, innovation, and commercialization of new technologies. The U.S. offers tremendous resources and advantages for those who invest and manufacture goods here. Through SelectUSA, our nation works to promote and facilitate business investment. SelectUSA provides information assistance to the international investor community; serves as an ombudsman for existing and potential investors; advocates on behalf of U.S. cities, states, and regions competing for global investment; and counsels U.S. economic development organizations on investment attraction best practices. To learn more about why the United States is the best country in the world to develop technology, manufacture products, deliver services, and grow your business, visit http://www.SelectUSA.gov or call +1-202-482-6800.

SCORE Placeholder Sheet for IFW Content

Application Number: 63040562 Document Date: 06/18/2020

The presence of this form in the IFW record indicates that the following document type was received in electronic format on the date identified above. This content is stored in the SCORE database.

Since this was an electronic submission, there is no physical artifact folder, no artifact folder is recorded in PALM, and no paper documents or physical media exist. The TIFF images in the IFW record were created from the original documents that are stored in SCORE.

- Drawing

At the time of document entry (noted above):

- USPTO employees may access SCORE content via DAV or via the SCORE web page.
- External customers may access SCORE content via PAIR using the Supplemental Content tab.

Under the Paperwork Reduction Act of 1995, no persons are required to respond to a collection of information unless it contains a valid OMB control number.

Application Data Sheet 37 CFR 1.76	Attorney Docket Number	139616.010P
	Application Number	
Title of Invention	AMPHIBIOUS AGITATION MACHINE	

The application data sheet is part of the provisional or nonprovisional application for which it is being submitted. The following form contains the bibliographic data arranged in a format specified by the United States Patent and Trademark Office as outlined in 37 CFR 1.76.
This document may be completed electronically and submitted to the Office in electronic format using the Electronic Filing System (EFS) or the document may be printed and included in a paper filed application.

Secrecy Order 37 CFR 5.2:

☐ Portions or all of the application associated with this Application Data Sheet may fall under a Secrecy Order pursuant to 37 CFR 5.2 (Paper filers only. Applications that fall under Secrecy Order may not be filed electronically.)

Inventor Information:

Inventor 1 Remove

Legal Name

Prefix	Given Name	Middle Name	Family Name	Suffix
	Phillip		Minino	

Residence Information (Select One) ● US Residency Non US Residency Active US Military Service

City	Washington	State/Province	IA	Country of Residence i	US

Mailing Address of Inventor:

Address 1	300 E 7th Street		
Address 2	P.O. Box 869		
City	Washington	State/Province	IA
Postal Code	52353	Country i	US

Inventor 2 Remove

Legal Name

Prefix	Given Name	Middle Name	Family Name	Suffix
	Eric		Svenby	

Residence Information (Select One) ◉ US Residency Non US Residency Active US Military Service

City	Washington	State/Province	IA	Country of Residence i	US

Mailing Address of Inventor:

Address 1	300 E. 7th Street		
Address 2			
City	Washington	State/Province	IA
Postal Code	52353	Country i	US

All Inventors Must Be Listed - Additional Inventor Information blocks may be generated within this form by selecting the **Add** button. Add

Correspondence Information:

Enter either Customer Number or complete the Correspondence Information section below.
For further information see 37 CFR 1.33(a).

Under the Paperwork Reduction Act of 1995, no persons are required to respond to a collection of information unless it contains a valid OMB control number.

Application Data Sheet 37 CFR 1.76	Attorney Docket Number	139616.010P
	Application Number	
Title of Invention	AMPHIBIOUS AGITATION MACHINE	

☐ **An Address is being provided for the correspondence Information of this application.**

Customer Number	24234		
Email Address	patents@simmonsperrine.com	Add Email	Remove Email

Application Information:

Title of the Invention	AMPHIBIOUS AGITATION MACHINE		
Attorney Docket Number	139616.010P	**Small Entity Status Claimed**	☒
Application Type	Provisional		
Subject Matter	Utility		
Total Number of Drawing Sheets (if any)		**Suggested Figure for Publication (if any)**	

Filing By Reference:

Only complete this section when filing an application by reference under 35 U.S.C. 111(c) and 37 CFR 1.57(a). Do not complete this section if application papers including a specification and any drawings are being filed. Any domestic benefit or foreign priority information must be provided in the appropriate section(s) below (i.e., "Domestic Benefit/National Stage Information" and "Foreign Priority Information").

For the purposes of a filing date under 37 CFR 1.53(b), the description and any drawings of the present application are replaced by this reference to the previously filed application, subject to conditions and requirements of 37 CFR 1.57(a).

Application number of the previously filed application	Filing date (YYYY-MM-DD)	Intellectual Property Authority or Country

Publication Information:

☐ Request Early Publication (Fee required at time of Request 37 CFR 1.219)

☐ **Request Not to Publish.** I hereby request that the attached application not be published under 35 U.S.C. 122(b) and certify that the invention disclosed in the attached application **has not and will not** be the subject of an application filed in another country, or under a multilateral international agreement, that requires publication at eighteen months after filing.

Representative Information:

Representative information should be provided for all practitioners having a power of attorney in the application. Providing this information in the Application Data Sheet does not constitute a power of attorney in the application (see 37 CFR 1.32).
Either enter Customer Number or complete the Representative Name section below. If both sections are completed the customer Number will be used for the Representative Information during processing.

Please Select One:	● Customer Number	US Patent Practitioner	◯ Limited Recognition (37 CFR 11.9)
Customer Number	24234		

Under the Paperwork Reduction Act of 1995, no persons are required to respond to a collection of information unless it contains a valid OMB control number.

Application Data Sheet 37 CFR 1.76	Attorney Docket Number	139616.010P
	Application Number	
Title of Invention	AMPHIBIOUS AGITATION MACHINE	

Domestic Benefit/National Stage Information:

This section allows for the applicant to either claim benefit under 35 U.S.C. 119(e), 120, 121, 365(c), or 386(c) or indicate National Stage entry from a PCT application. Providing benefit claim information in the Application Data Sheet constitutes the specific reference required by 35 U.S.C. 119(e) or 120, and 37 CFR 1.78.
When referring to the current application, please leave the "Application Number" field blank.

Prior Application Status			Remove
Application Number	Continuity Type	Prior Application Number	Filing or 371(c) Date (YYYY-MM-DD)

Additional Domestic Benefit/National Stage Data may be generated within this form by selecting the **Add** button. Add

Foreign Priority Information:

This section allows for the applicant to claim priority to a foreign application. Providing this information in the application data sheet constitutes the claim for priority as required by 35 U.S.C. 119(b) and 37 CFR 1.55. When priority is claimed to a foreign application that is eligible for retrieval under the priority document exchange program (PDX)[i] the information will be used by the Office to automatically attempt retrieval pursuant to 37 CFR 1.55(i)(1) and (2). Under the PDX program, applicant bears the ultimate responsibility for ensuring that a copy of the foreign application is received by the Office from the participating foreign intellectual property office, or a certified copy of the foreign priority application is filed, within the time period specified in 37 CFR 1.55(g)(1).

Remove

Application Number	Country[i]	Filing Date (YYYY-MM-DD)	Access Code[i] (if applicable)

Additional Foreign Priority Data may be generated within this form by selecting the **Add** button. Add

Statement under 37 CFR 1.55 or 1.78 for AIA (First Inventor to File) Transition Applications

☐ This application (1) claims priority to or the benefit of an application filed before March 16, 2013 and (2) also contains, or contained at any time, a claim to a claimed invention that has an effective filing date on or after March 16, 2013.
NOTE: By providing this statement under 37 CFR 1.55 or 1.78, this application, with a filing date on or after March 16, 2013, will be examined under the first inventor to file provisions of the AIA.

Application Data Sheet 37 CFR 1.76	Attorney Docket Number	139616.010P
	Application Number	
Title of Invention	AMPHIBIOUS AGITATION MACHINE	

Authorization or Opt-Out of Authorization to Permit Access:

When this Application Data Sheet is properly signed and filed with the application, applicant has provided written authority to permit a participating foreign intellectual property (IP) office access to the instant application-as-filed (see paragraph A in subsection 1 below) and the European Patent Office (EPO) access to any search results from the instant application (see paragraph B in subsection 1 below).

Should applicant choose not to provide an authorization identified in subsection 1 below, applicant **must opt-out** of the authorization by checking the corresponding box A or B or both in subsection 2 below.

NOTE: This section of the Application Data Sheet is **ONLY** reviewed and processed with the **INITIAL** filing of an application. After the initial filing of an application, an Application Data Sheet cannot be used to provide or rescind authorization for access by a foreign IP office(s). Instead, Form PTO/SB/39 or PTO/SB/69 must be used as appropriate.

1. Authorization to Permit Access by a Foreign Intellectual Property Office(s)

A. Priority Document Exchange (PDX) - Unless box A in subsection 2 (opt-out of authorization) is checked, the undersigned hereby **grants the USPTO authority** to provide the European Patent Office (EPO), the Japan Patent Office (JPO), the Korean Intellectual Property Office (KIPO), the State Intellectual Property Office of the People's Republic of China (SIPO), the World Intellectual Property Organization (WIPO), and any other foreign intellectual property office participating with the USPTO in a bilateral or multilateral priority document exchange agreement in which a foreign application claiming priority to the instant patent application is filed, access to: (1) the instant patent application-as-filed and its related bibliographic data, (2) any foreign or domestic application to which priority or benefit is claimed by the instant application and its related bibliographic data, and (3) the date of filing of this Authorization. See 37 CFR 1.14(h)(1).

B. Search Results from U.S. Application to EPO - Unless box B in subsection 2 (opt-out of authorization) is checked, the undersigned hereby **grants the USPTO authority** to provide the EPO access to the bibliographic data and search results from the instant patent application when a European patent application claiming priority to the instant patent application is filed. See 37 CFR 1.14(h)(2).

The applicant is reminded that the EPO's Rule 141(1) EPC (European Patent Convention) requires applicants to submit a copy of search results from the instant application without delay in a European patent application that claims priority to the instant application.

2. Opt-Out of Authorizations to Permit Access by a Foreign Intellectual Property Office(s)

☐ A. Applicant **DOES NOT** authorize the USPTO to permit a participating foreign IP office access to the instant application-as-filed. If this box is checked, the USPTO will not be providing a participating foreign IP office with any documents and information identified in subsection 1A above.

☐ B. Applicant **DOES NOT** authorize the USPTO to transmit to the EPO any search results from the instant patent application. If this box is checked, the USPTO will not be providing the EPO with search results from the instant application.

NOTE: Once the application has published or is otherwise publicly available, the USPTO may provide access to the application in accordance with 37 CFR 1.14.

Under the Paperwork Reduction Act of 1995, no persons are required to respond to a collection of information unless it contains a valid OMB control number.

Application Data Sheet 37 CFR 1.76	Attorney Docket Number	139616.010P
	Application Number	
Title of Invention	AMPHIBIOUS AGITATION MACHINE	

Applicant Information:

Providing assignment information in this section does not substitute for compliance with any requirement of part 3 of Title 37 of CFR to have an assignment recorded by the Office.

Applicant 1 Remove

If the applicant is the inventor (or the remaining joint inventor or inventors under 37 CFR 1.45), this section should not be completed. The information to be provided in this section is the name and address of the legal representative who is the applicant under 37 CFR 1.43; or the name and address of the assignee, person to whom the inventor is under an obligation to assign the invention, or person who otherwise shows sufficient proprietary interest in the matter who is the applicant under 37 CFR 1.46. If the applicant is an applicant under 37 CFR 1.46 (assignee, person to whom the inventor is obligated to assign, or person who otherwise shows sufficient proprietary interest) together with one or more joint inventors, then the joint inventor or inventors who are also the applicant should be identified in this section.

Clear

Assignee	Legal Representative under 35 U.S.C. 117	Joint Inventor
● Person to whom the inventor is obligated to assign.	Person who shows sufficient proprietary interest	

If applicant is the legal representative, indicate the authority to file the patent application, the inventor is:

Name of the Deceased or Legally Incapacitated Inventor:

If the Applicant is an Organization check here. ☒

Organization Name	Bazooka-Farmstar, Inc.		
Mailing Address Information For Applicant:			
Address 1	800 E 7th Street		
Address 2	P.O. Box 869		
City	Washington	**State/Province**	IA
Country	US	Postal Code	52353
Phone Number		Fax Number	
Email Address			

Additional Applicant Data may be generated within this form by selecting the Add button. Add

Assignee Information including Non-Applicant Assignee Information:

Providing assignment information in this section does not substitute for compliance with any requirement of part 3 of Title 37 of CFR to have an assignment recorded by the Office.

Under the Paperwork Reduction Act of 1995, no persons are required to respond to a collection of information unless it contains a valid OMB control number.

Application Data Sheet 37 CFR 1.76	Attorney Docket Number	139616.010P
	Application Number	
Title of Invention	AMPHIBIOUS AGITATION MACHINE	

Assignee 1

Complete this section if assignee information, including non-applicant assignee information, is desired to be included on the patent application publication. An assignee-applicant identified in the "Applicant Information" section will appear on the patent application publication as an applicant. For an assignee-applicant, complete this section only if identification as an assignee is also desired on the patent application publication.

Remove

If the Assignee or Non-Applicant Assignee is an Organization check here. ☐

Prefix	**Given Name**	Middle Name	**Family Name**	Suffix

Mailing Address Information For Assignee including Non-Applicant Assignee:

Address 1			
Address 2			
City		**State/Province**	
Country i		Postal Code	
Phone Number		Fax Number	
Email Address			

Additional Assignee or Non-Applicant Assignee Data may be generated within this form by selecting the Add button. Add

Signature:

Remove

NOTE: This Application Data Sheet must be signed in accordance with 37 CFR 1.33(b). **However, if this Application Data Sheet is submitted with the INITIAL filing of the application and either box A or B is not checked in subsection 2 of the "Authorization or Opt-Out of Authorization to Permit Access" section, then this form must also be signed in accordance with 37 CFR 1.14(c).**

This Application Data Sheet **must** be signed by a patent practitioner if one or more of the applicants is a **juristic entity** (e.g., corporation or association). If the applicant is two or more joint inventors, this form must be signed by a patent practitioner, **all** joint inventors who are the applicant, or one or more joint inventor-applicants who have been given power of attorney (e.g., see USPTO Form PTO/AIA/81) on behalf of **all** joint inventor-applicants.

See 37 CFR 1.4(d) for the manner of making signatures and certifications.

Signature	/Christopher J. Voci/			Date (YYYY-MM-DD)	2020-06-17
First Name	Christopher	Last Name	Voci	Registration Number	45184

Additional Signature may be generated within this form by selecting the Add button. Add

Application Data Sheet 37 CFR 1.76	Attorney Docket Number	139616.010P
	Application Number	
Title of Invention	AMPHIBIOUS AGITATION MACHINE	

This collection of information is required by 37 CFR 1.76. The information is required to obtain or retain a benefit by the public which is to file (and by the USPTO to process) an application. Confidentiality is governed by 35 U.S.C. 122 and 37 CFR 1.14. This collection is estimated to take 23 minutes to complete, including gathering, preparing, and submitting the completed application data sheet form to the USPTO. Time will vary depending upon the individual case. Any comments on the amount of time you require to complete this form and/or suggestions for reducing this burden, should be sent to the Chief Information Officer, U.S. Patent and Trademark Office, U.S. Department of Commerce, P.O. Box 1450, Alexandria, VA 22313-1450. DO NOT SEND FEES OR COMPLETED FORMS TO THIS ADDRESS. **SEND TO: Commissioner for Patents, P.O. Box 1450, Alexandria, VA 22313-1450.**

Privacy Act Statement

The Privacy Act of 1974 (P.L. 93-579) requires that you be given certain information in connection with your submission of the attached form related to a patent application or patent. Accordingly, pursuant to the requirements of the Act, please be advised that: (1) the general authority for the collection of this information is 35 U.S.C. 2(b)(2); (2) furnishing of the information solicited is voluntary; and (3) the principal purpose for which the information is used by the U.S. Patent and Trademark Office is to process and/or examine your submission related to a patent application or patent. If you do not furnish the requested information, the U.S. Patent and Trademark Office may not be able to process and/or examine your submission, which may result in termination of proceedings or abandonment of the application or expiration of the patent.

The information provided by you in this form will be subject to the following routine uses:

1 The information on this form will be treated confidentially to the extent allowed under the Freedom of Information Act (5 U.S.C. 552) and the Privacy Act (5 U.S.C. 552a). Records from this system of records may be disclosed to the Department of Justice to determine whether the Freedom of Information Act requires disclosure of these records.

2. A record from this system of records may be disclosed, as a routine use, in the course of presenting evidence to a court, magistrate, or administrative tribunal, including disclosures to opposing counsel in the course of settlement negotiations.

3 A record in this system of records may be disclosed, as a routine use, to a Member of Congress submitting a request involving an individual, to whom the record pertains, when the individual has requested assistance from the Member with respect to the subject matter of the record.

4. A record in this system of records may be disclosed, as a routine use, to a contractor of the Agency having need for the information in order to perform a contract. Recipients of information shall be required to comply with the requirements of the Privacy Act of 1974, as amended, pursuant to 5 U.S.C. 552a(m).

5. A record related to an International Application filed under the Patent Cooperation Treaty in this system of records may be disclosed, as a routine use, to the International Bureau of the World Intellectual Property Organization, pursuant to the PatentCooperationTreaty.

6. A record in this system of records may be disclosed, as a routine use, to another federal agency for purposes of National Security review (35 U.S.C. 181) and for review pursuant to the Atomic Energy Act (42 U.S.C. 218(c)).

7. A record from this system of records may be disclosed, as a routine use, to the Administrator, General Services, or his/her designee, during an inspection of records conducted by GSA as part of that agency's responsibility to recommend improvements in records management practices and programs, under authority of 44 U.S.C. 2904 and 2906. Such disclosure shall be made in accordance with the GSA regulations governing inspection of records for this purpose, and any other relevant (i.e., GSA or Commerce) directive. Such disclosure shall not be used to make determinations about individuals.

8. A record from this system of records may be disclosed, as a routine use, to the public after either publication of the application pursuant to 35 U.S.C. 122(b) or issuance of a patent pursuant to 35 U.S.C. 151. Further, a record may be disclosed, subject to the limitations of 37 CFR 1.14, as a routine use, to the public if the record was filed in an application which became abandoned or in which the proceedings were terminated and which application is referenced by either a published application, an application open to public inspections or an issued patent.

9. A record from this system of records may be disclosed, as a routine use, to a Federal, State, or local law enforcement agency, if the USPTO becomes aware of a violation or potential violation of law or regulation.

Doc Code: **TR.PROV**
Document Description: Provisional Cover Sheet (SB16)

PTO/SB/16 (02-18)
Approved for use through 11/30/2020. OMB 0651-0032
U.S. Patent and Trademark Office: U.S. DEPARTMENT OF COMMERCE
Under the Paperwork Reduction Act of 1995, no persons are required to respond to a collection of information unless it displays a valid OMB control number

Provisional Application for Patent Cover Sheet

This is a request for filing a PROVISIONAL APPLICATION FOR PATENT under 37 CFR 1.53(c)

Inventor(s)

Inventor 1 — Remove

Given Name	Middle Name	Family Name	City	State	Country
Phillip		Minino	Washington	IA	US

Inventor 2 — Remove

Given Name	Middle Name	Family Name	City	State	Country
Eric		Svenby	Washington	IA	US

All Inventors Must Be Listed – Additional Inventor Information blocks may be generated within this form by selecting the **Add** button. — Add

Title of Invention	AMPHIBIOUS AGITATION MACHINE
Attorney Docket Number (if applicable)	139616.010P

Correspondence Address

Direct all correspondence to (select one):

◉ The address corresponding to Customer Number	○ Firm or Individual Name
Customer Number	24234

The invention was made by an agency of the United States Government or under a contract with an agency of the United States Government.

- ● No.
- Yes, the invention was made by an agency of the United States Government. The U.S. Government agency name is:
- Yes, the invention was under a contract with an agency of the United States Government. The name of the U.S. Government agency and Government contract number are:

PTO/SB/16 (02-18)
Approved for use through 11/30/2020. OMB 0651-0032
U.S. Patent and Trademark Office: U.S. DEPARTMENT OF COMMERCE
Under the Paperwork Reduction Act of 1995, no persons are required to respond to a collection of information unless it displays a valid OMB control number

Entity Status
Applicant asserts small entity status under 37 CFR 1.27 or applicant certifies micro entity status under 37 CFR 1.29

- (●) Applicant asserts small entity status under 37 CFR 1.27
- ( ) Applicant certifies micro entity status under 37 CFR 1.29. Applicant must attach form PTO/SB/15A or B or equivalent.
- ( ) No

Warning

Petitioner/applicant is cautioned to avoid submitting personal information in documents filed in a patent application that may contribute to identity theft. Personal information such as social security numbers, bank account numbers, or credit card numbers (other than a check or credit card authorization form PTO-2038 submitted for payment purposes) is never required by the USPTO to support a petition or an application. If this type of personal information is included in documents submitted to the USPTO, petitioners/applicants should consider redacting such personal information from the documents before submitting them to USPTO. Petitioner/applicant is advised that the record of a patent application is available to the public after publication of the application (unless a non-publication request in compliance with 37 CFR 1.213(a) is made in the application) or issuance of a patent. Furthermore, the record from an abandoned application may also be available to the public if the application is referenced in a published application or an issued patent (see 37 CFR1.14). Checks and credit card authorization forms PTO-2038 submitted for payment purposes are not retained in the application file and therefore are not publicly available.

Signature

Please see 37 CFR 1.4(d) for the form of the signature.

Signature	/Christopher J. Voci/			Date (YYYY-MM-DD)	2020-06-17
First Name	Christopher	Last Name	Voci	Registration Number (If appropriate)	45184

This collection of information is required by 37 CFR 1.51. The information is required to obtain or retain a benefit by the public which is to file (and by the USPTO to process) an application. Confidentiality is governed by 35 U.S.C. 122 and 37 CFR 1.11 and 1.14. This collection is estimated to take 8 hours to complete, including gathering, preparing, and submitting the completed application form to the USPTO. Time will vary depending upon the individual case. Any comments on the amount of time you require to complete this form and/or suggestions for reducing this burden, should be sent to the Chief Information Officer, U.S. Patent and Trademark Office, U.S. Department of Commerce, P.O. Box 1450, Alexandria, VA 22313-1450. DO NOT SEND FEES OR COMPLETED FORMS TO THIS ADDRESS. **This form can only be used when in conjunction with EFS-Web. If this form is mailed to the USPTO, it may cause delays in handling the provisional application.**

Privacy Act Statement

The Privacy Act of 1974 (P.L. 93-579) requires that you be given certain information in connection with your submission of the attached form related to a patent application or paten. Accordingly, pursuant to the requirements of the Act, please be advised that : (1) the general authority for the collection of this information is 35 U.S.C. 2(b)(2); (2) furnishing of the information solicited is voluntary; and (3) the principal purpose for which the information is used by the U.S. Patent and Trademark Office is to process and/or examine your submission related to a patent application or patent. If you do not furnish the requested information, the U.S. Patent and Trademark Office may not be able to process and/or examine your submission, which may result in termination of proceedings or abandonment of the application or expiration of the patent.

The information provided by you in this form will be subject to the following routine uses:

1. The information on this form will be treated confidentially to the extent allowed under the Freedom of Information Act (5 U.S.C. 552) and the Privacy Act (5 U.S.C 552a). Records from this system of records may be disclosed to the Department of Justice to determine whether disclosure of these records is required by the Freedom of Information Act.
2. A record from this system of records may be disclosed, as a routine use, in the course of presenting evidence to a court, magistrate, or administrative tribunal, including disclosures to opposing counsel in the course of settlement negotiations.
3. A record in this system of records may be disclosed, as a routine use, to a Member of Congress submitting a request involving an individual, to whom the record pertains, when the individual has requested assistance from the Member with respect to the subject matter of the record.
4. A record in this system of records may be disclosed, as a routine use, to a contractor of the Agency having need for the information in order to perform a contract. Recipients of information shall be required to comply with the requirements of the Privacy Act of 1974, as amended, pursuant to 5 U.S.C. 552a(m).
5. A record related to an International Application filed under the Patent Cooperation Treaty in this system of records may be disclosed, as a routine use, to the International Bureau of the World Intellectual Property Organization, pursuant to the Patent Cooperation Treaty.
6. A record in this system of records may be disclosed, as a routine use, t o a n other federal agency for purposes of National Security review (35 U.S.C. 181) and for review pursuant to the Atomic Energy Act (42 U.S.C. 218(c)).
7. A record from this system of records may be disclosed, as a routine use, to the Administrator, General Services, or his/her designee, during an inspection of records conducted by GSA as part of that agency's responsibility to recommend improvements in records management practices and programs, under authority of 44 U.S.C. 2904 and 2906. Such disclosure shall be made in accordance with the GSA regulations governing inspection of records for this purpose, and any other relevant (i.e., GSA or Commerce) directive. Such disclosure shall not be used to make determinations about individuals.
8. A record from this system of records may be disclosed, as a routine use, to the public after either publication of the application pursuant to 35 U.S.C. 122(b) or issuance of a patent pursuant to 35 U.S.C. 151. Further, a record may be disclosed, subject to the limitations of 37 CFR 1.14, as a routine use, to the public if the record was filed in an application which became abandoned or in which the proceedings were terminated and which application is referenced by either a published application, an application open to public inspection or an issued patent.
9. A record from this system of records may be disclosed, as a routine use, to a Federal, State, or local law enforcement agency, if the USPTO becomes aware of a violation or potential violation of law or regulation.

Figure 1

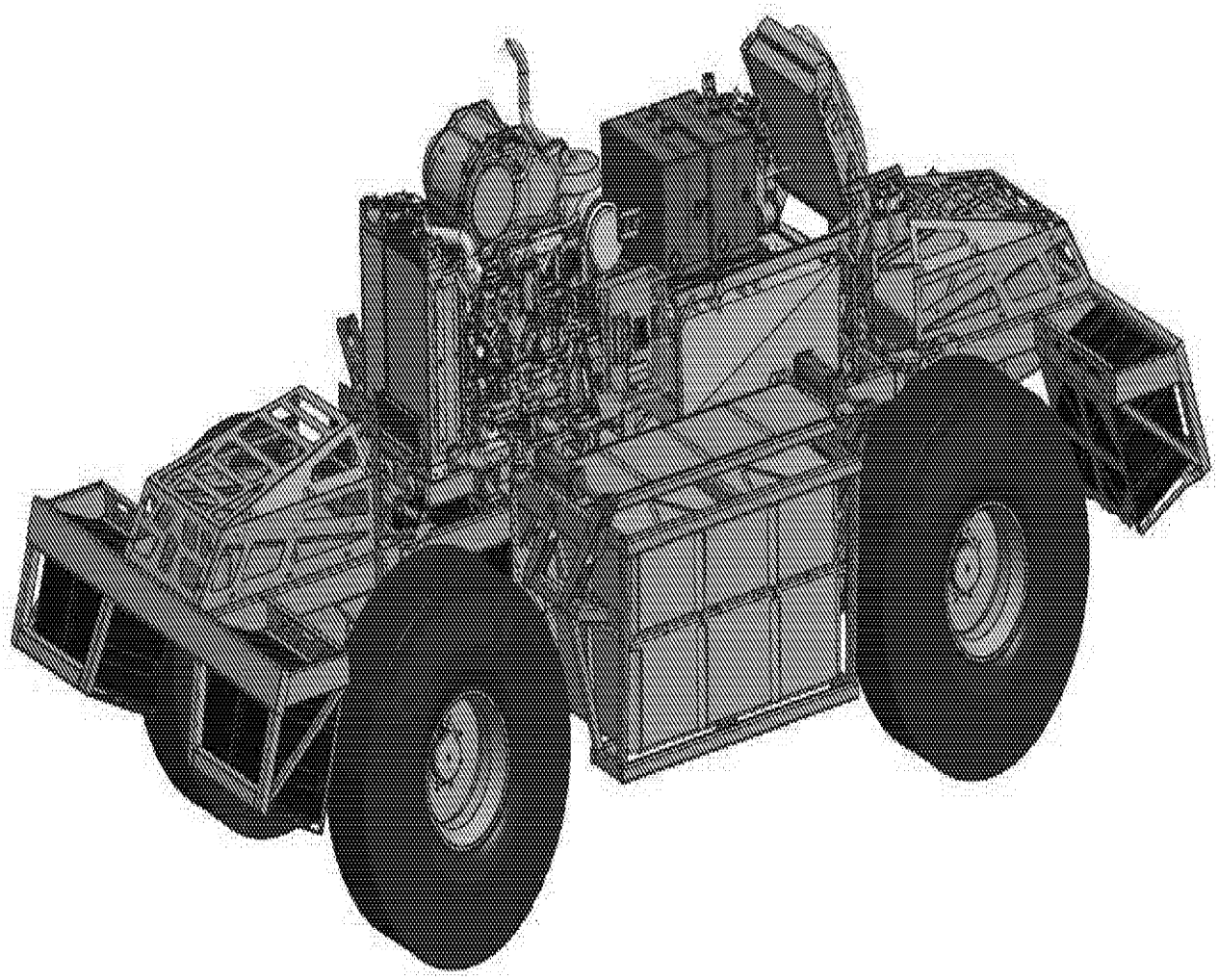

Figure 2

Side View

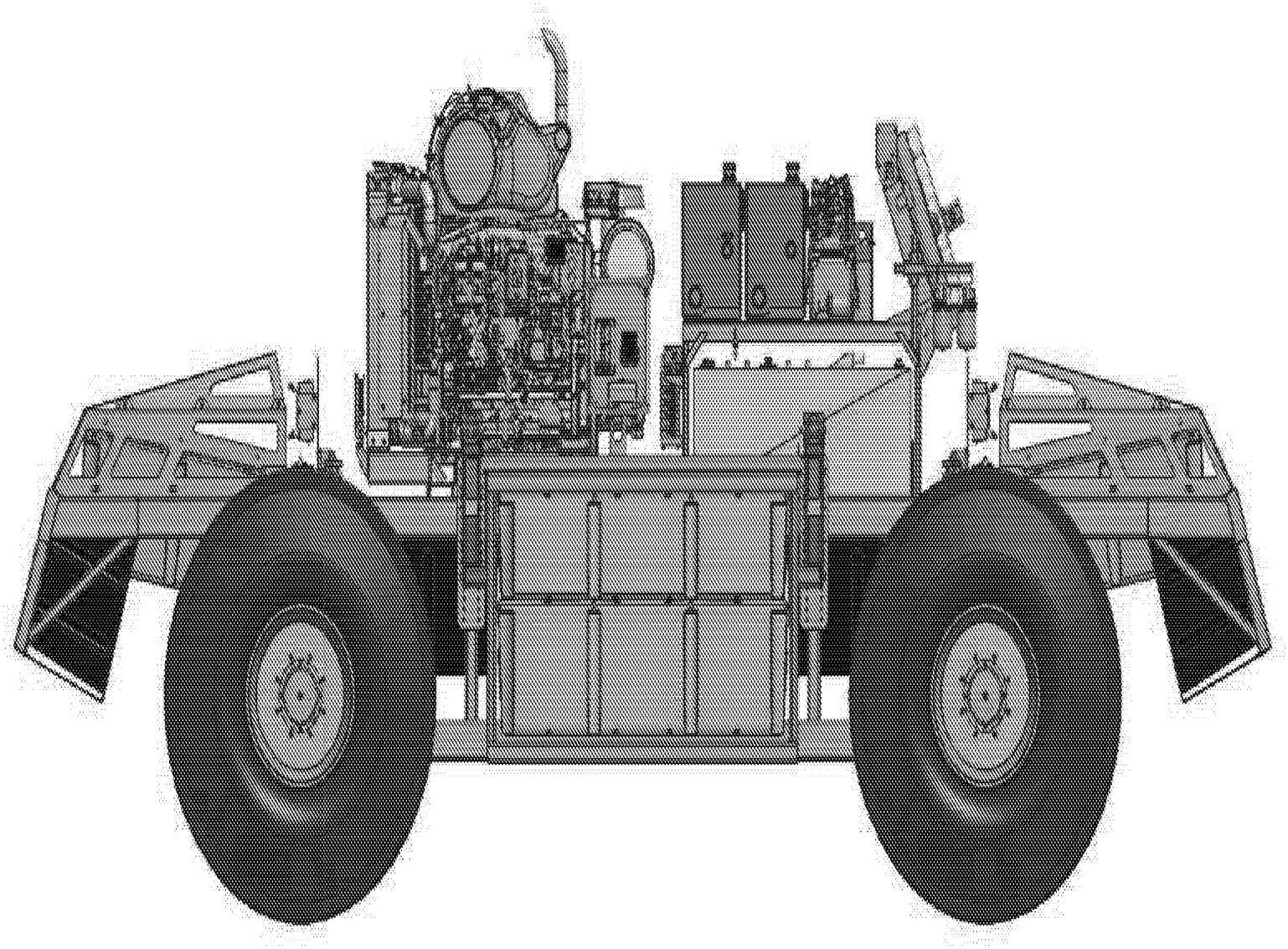

Front View - Propeller Tilt from vertical (down thrust) to Horizontal (Fore-Aft Thrust)
Also has an outward angle tilt for side thrust (this angle can be manually adjusted). Side thrust happens using variable rpm's on left propellers versus right.

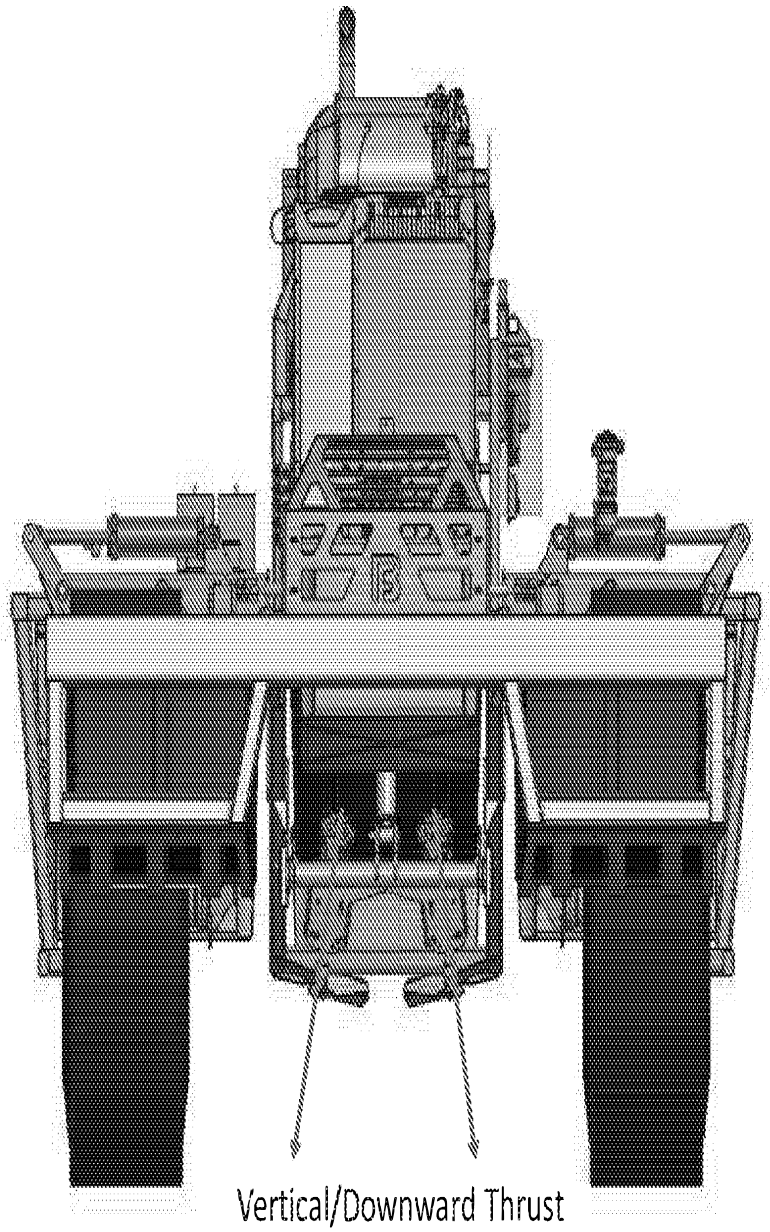

Figure 3A

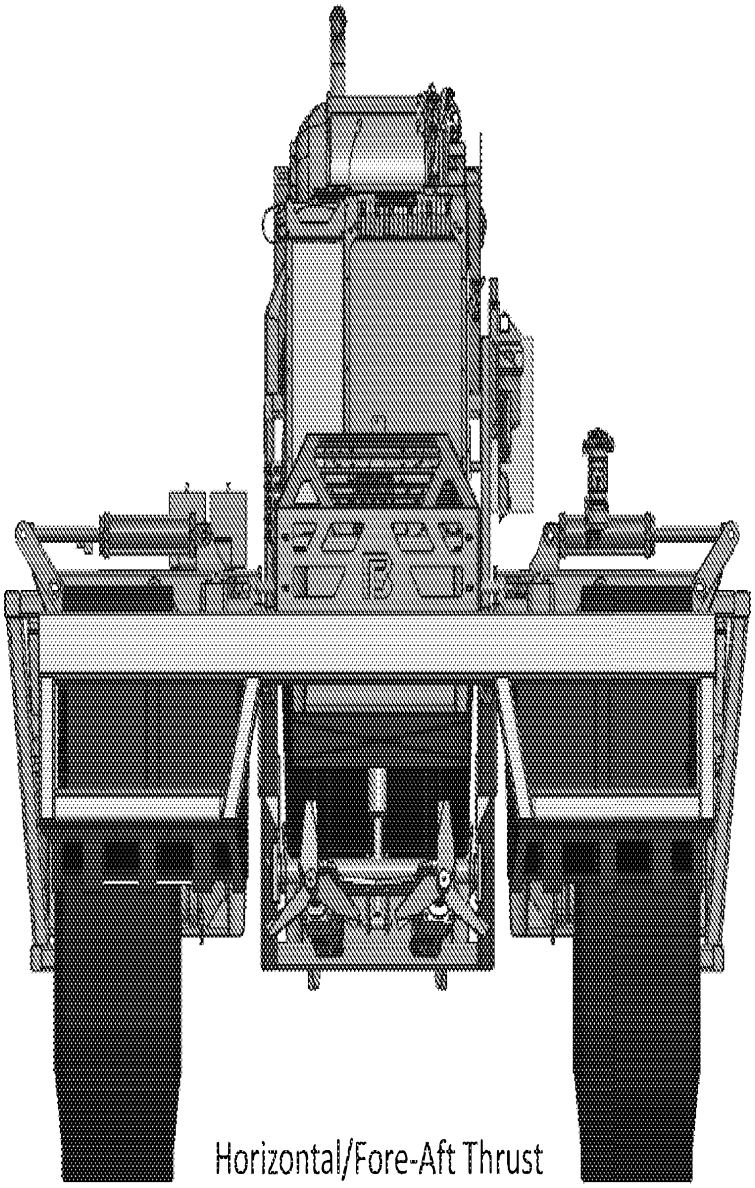

Figure 3B

Bottom View – Propellers oriented for vertical/downward thrust. Vehicle can rotate about it's Vertical centerline axis by varying propeller RPM of opposite corners of the machine – also referred to as "Yaw".

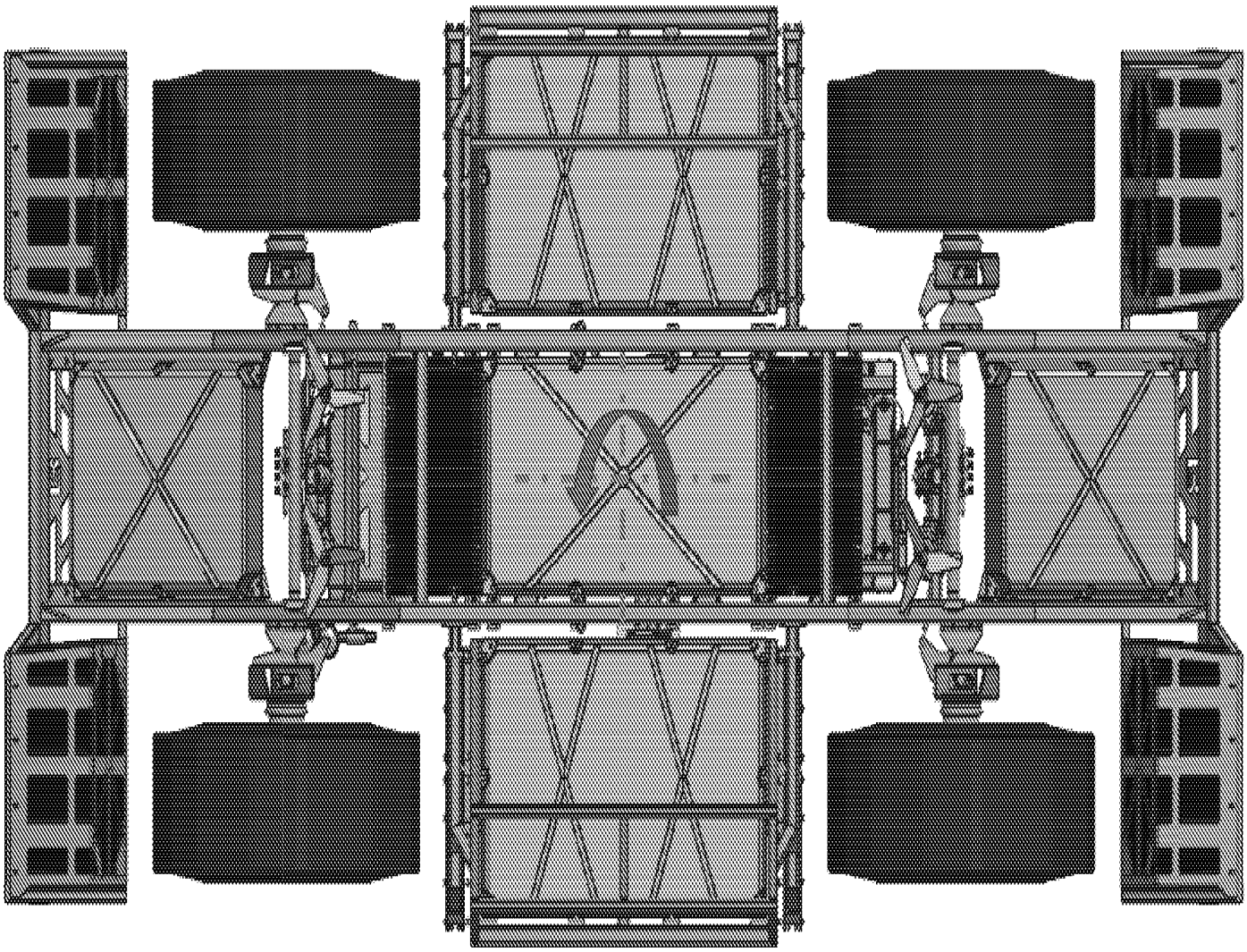

Figure 4

Side View (tires hidden)

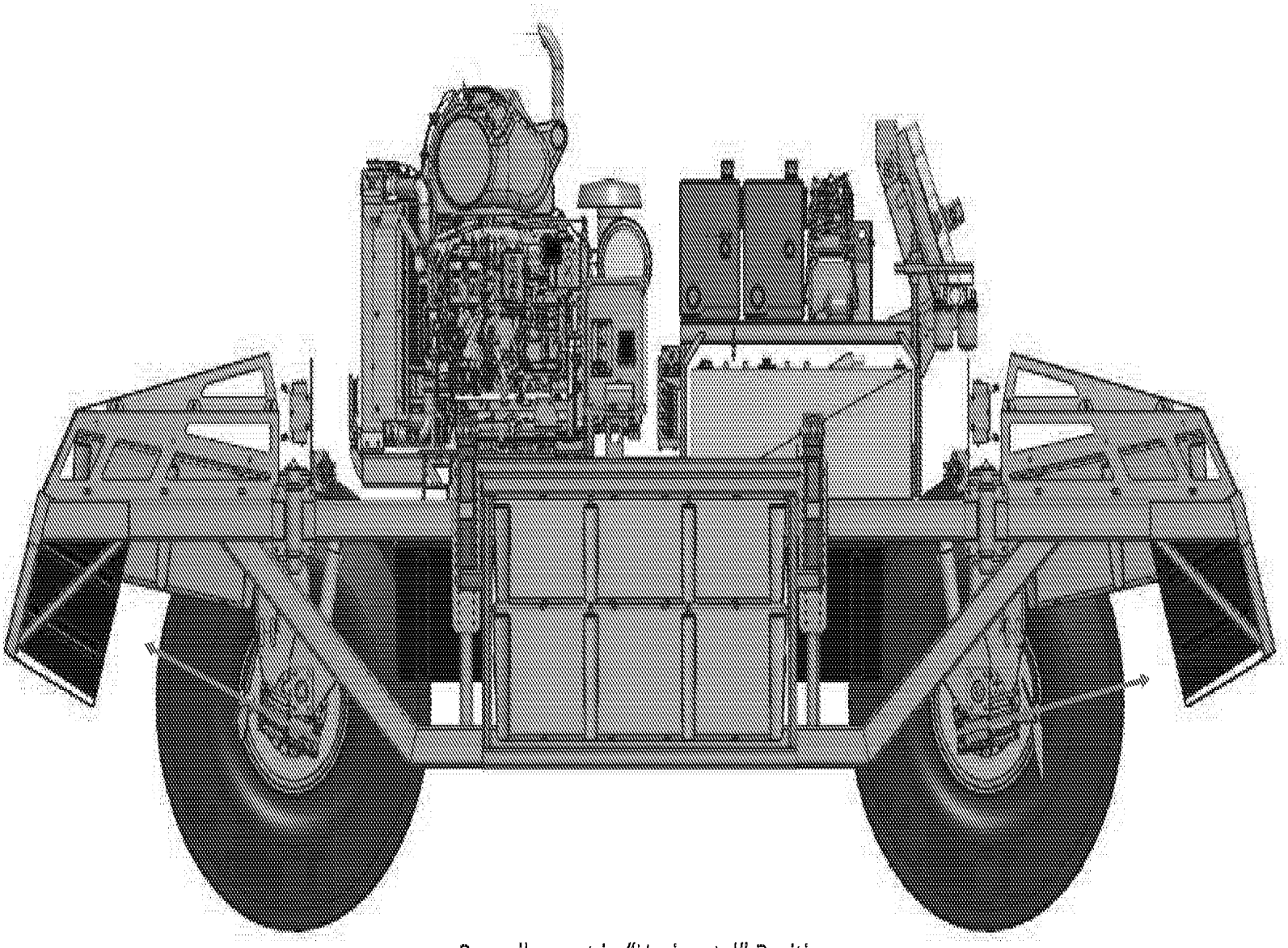

Propellers set in "Horizontal" Position
For surface agitation/mixing

Figure 5

Side View (tires hidden)

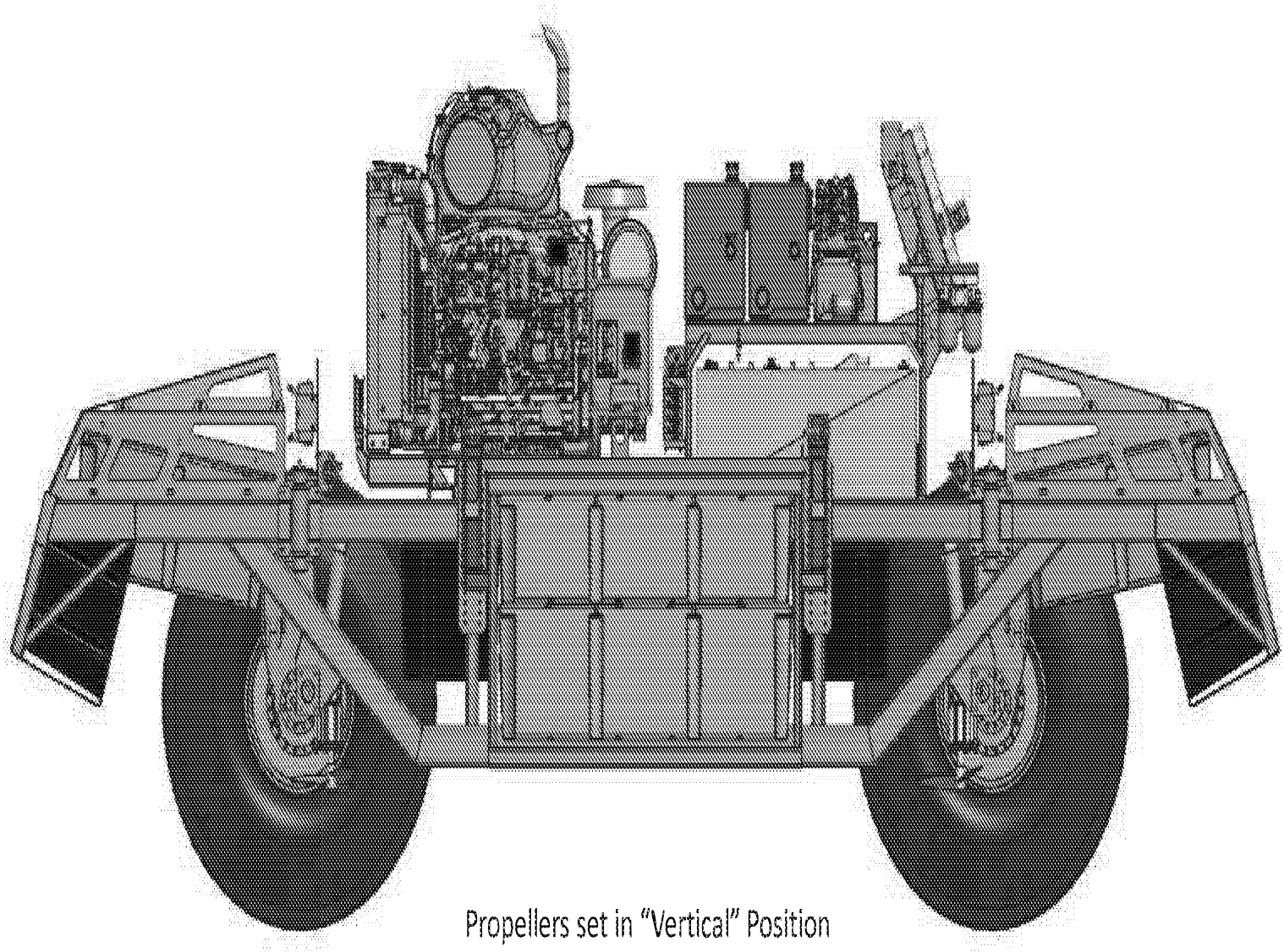

Propellers set in "Vertical" Position
For deep agitation/mixing

Figure 6

2 Wheel Steer (Front or Rear)

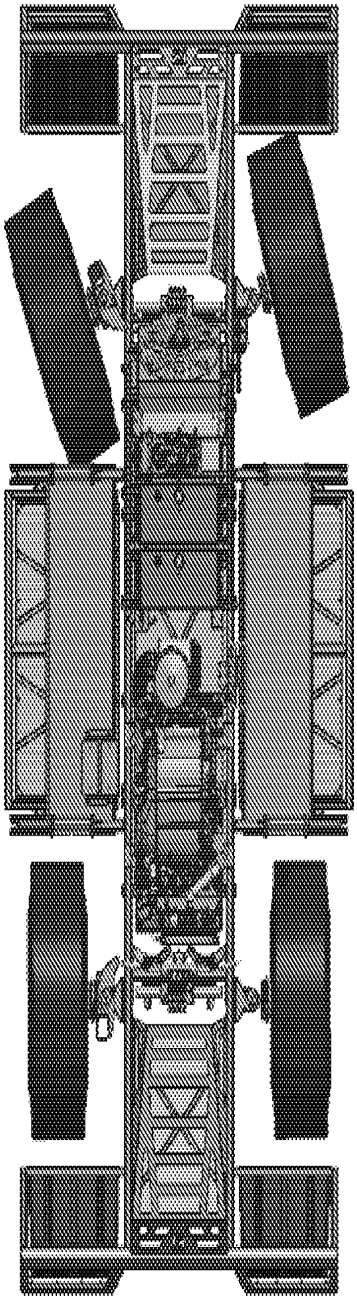

Figure 7A

4 Wheel Steer

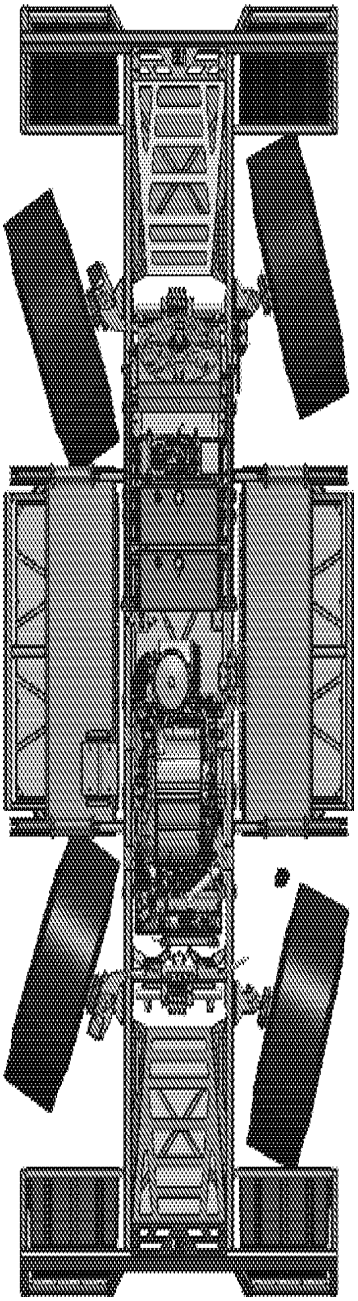

Figure 7B

Crab Steer

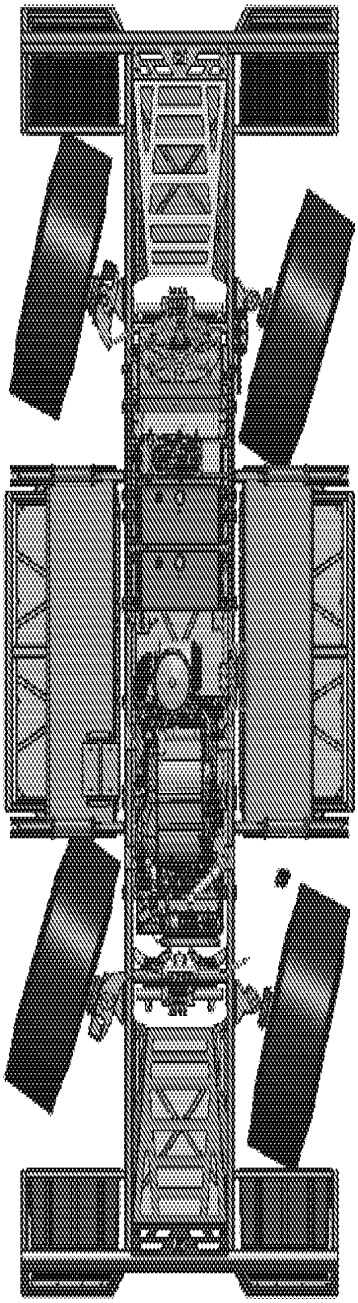

Figure 7C

Electronic Patent Application Fee Transmittal

Application Number:	
Filing Date:	
Title of Invention:	AMPHIBIOUS AGITATION MACHINE
First Named Inventor/Applicant Name:	Phillip Minino
Filer:	Christopher J Voci/Julie Agnew
Attorney Docket Number:	139616.010P

Filed as Small Entity

Filing Fees for **Provisional**

Description	Fee Code	Quantity	Amount	Sub-Total in USD($)
Basic Filing:				
PROVISIONAL APPLICATION FILING FEE	2005	1	140	140
Pages:				
Claims:				
Miscellaneous-Filing:				
Petition:				
Patent-Appeals-and-Interference:				
Post-Allowance-and-Post-Issuance:				

Description	Fee Code	Quantity	Amount	Sub-Total in USD($)
Extension-of-Time:				
Miscellaneous:				
			Total in USD ($)	**140**

Electronic Acknowledgement Receipt

EFS ID:	39752686
Application Number:	63040562
International Application Number:	
Confirmation Number:	9357
Title of Invention:	AMPHIBIOUS AGITATION MACHINE
First Named Inventor/Applicant Name:	Phillip Minino
Customer Number:	24234
Filer:	Christopher J Voci/Julie Agnew
Filer Authorized By:	Christopher J Voci
Attorney Docket Number:	139616.010P
Receipt Date:	18-JUN-2020
Filing Date:	
Time Stamp:	09:16:12
Application Type:	Provisional

Payment information:

Submitted with Payment	yes
Payment Type	CARD
Payment was successfully received in RAM	$140
RAM confirmation Number	E20206H016309235
Deposit Account	
Authorized User	

The Director of the USPTO is hereby authorized to charge indicated fees and credit any overpayment as follows:

File Listing:

Document Number	Document Description	File Name	File Size(Bytes)/ Message Digest	Multi Part /.zip	Pages (if appl.)
1	Application Data Sheet	ADS.pdf	1873931 5cd89ec9a7b45dace9e60462861a780d3efcedae	no	8
Warnings:					
Information:					
2	Provisional Cover Sheet (SB16)	Provisional_Cover_Sheet.pdf	2048387 b0d5dfcc589caf9c56d1c25d2548f643c3bf6b28	no	3
Warnings:					
Information:					
3	Specification	Provisional_Application.pdf	51865 a374b0b7f5cda94b62c4768fda2ff111b9d64b5b	no	6
Warnings:					
Information:					
4	Drawings-other than black and white line drawings	Provisional_Figures.pdf	1327203 9567103f33e77c893e698f6c31b240dfdf837ce4	no	7
Warnings:					
Information:					
5	Fee Worksheet (SB06)	fee-info.pdf	30008 7a97dbdac7fa9c7da3c9faae45199a3b6fe21ca0	no	2
Warnings:					
Information:					
		Total Files Size (in bytes):	5331394		

This Acknowledgement Receipt evidences receipt on the noted date by the USPTO of the indicated documents, characterized by the applicant, and including page counts, where applicable. It serves as evidence of receipt similar to a Post Card, as described in MPEP 503.

New Applications Under 35 U.S.C. 111
If a new application is being filed and the application includes the necessary components for a filing date (see 37 CFR 1.53(b)-(d) and MPEP 506), a Filing Receipt (37 CFR 1.54) will be issued in due course and the date shown on this Acknowledgement Receipt will establish the filing date of the application.
National Stage of an International Application under 35 U.S.C. 371
If a timely submission to enter the national stage of an international application is compliant with the conditions of 35 U.S.C. 371 and other applicable requirements a Form PCT/DO/EO/903 indicating acceptance of the application as a national stage submission under 35 U.S.C. 371 will be issued in addition to the Filing Receipt, in due course.
New International Application Filed with the USPTO as a Receiving Office
If a new international application is being filed and the international application includes the necessary components for an international filing date (see PCT Article 11 and MPEP 1810), a Notification of the International Application Number and of the International Filing Date (Form PCT/RO/105) will be issued in due course, subject to prescriptions concerning national security, and the date shown on this Acknowledgement Receipt will establish the international filing date of the application.

AMPHIBIOUS AGITATION MACHINE

FIELD OF THE INVENTION

[0001] This invention related generally to amphibious machines, and more particularly amphibious agitation machines, and even more particularly to amphibious agitation machine for manure lagoons.

BACKGROUND OF THE INVENTION

[0002] Standing ponds or lagoons are used for holding or containing both solid and liquid materials. Both natural occurring and man-made lagoons may need to be treated or otherwise utilized. For example, natural ponds may need vegetation treated or physical removal and man-made lagoons may need to be stirred in order to facilitate removal of the material in the lagoon. In one situation, manure lagoons need to be agitated in order to facilitate removal of manure slurry, which can then be applied as part of growing crops. Machines used for these activities include boats, bottom crawlers, and combination machines that both float and ride on the bottom of the lagoon. Agitation is usually accomplished through recirculating liquid from the lagoon or through propellers. Recirculating liquid agitation rely on pumping liquid through nozzles directed into or through the lagoon. Propellers at the surface and under the surface may be another source of agitation.

[0003] Existing solutions have several shortcomings. Most existing units use submerged centrifugal pumps driven from an engine/gearbox drivetrain, then pump the slurry through piping and nozzles which are opened and closed to steer the boat with a vast network of hydraulic valving and controls. The main problem with this type of solution is the wear and tear (and thus reliability) of the unit since every gallon used for power and mixing has to flow through a single pump. Use of very high velocity and, in some solutions, high pressures to do this, which is cause for excess and premature wear when pumping hard sand mixtures. The network of hydraulic valves and piping gate valves are complex (e.g. lots of moving components) that are difficult to maintain and become unreliable after even short term use.

[0004] Other solutions use high pressure/high velocity nozzles to mix solids and nutrients from below the vehicle. The high velocity and relatively low volume of liquid have very high energy dissipation when contacting the main body of water/liquid manure. They lack the ability to agitate deep lagoons. They also use these nozzles to steer the vehicle when floating.

[0005] Thus, known solutions fail to provide adequate agitation, maneuverability of the machine, or have other failings, such as cost.

SUMMARY OF THE INVENTION

[0006] The present invention includes a platform with a plurality of wheels. The platform houses one or more drive motors and a plurality propellers.

BRIEF DESCRIPTION OF THE DRAWINGS

[0007] Fig. 1 shows an oblique view of the invention.

[0008] Fig. 2 shows a side view of the invention.

[0009] Fig. 3A shows a front view of the invention with propellers providing vertical thrust.

[0010] Fig. 3B shows a front view of the invention with propellers providing horizontal thrust.

[0011] Fig. 4 shows a bottom view of the invention.

[0012] Fig. 5 shows a partial cut-away side view of the invention with propellers providing horizontal thrust.

[0013] Fig. 5 shows a partial cut-away side view of the invention with propellers providing vertical thrust.

[0014] Figs. 7A, 7B, and 7C show bottom view of the invention with two wheel steering, four wheel steering, and four wheel crab steering.

DETAILED DESCRIPTION

[0015] The machine of the present invention includes a platform with a plurality of wheels. The platform houses one or more drive motors and a plurality of propellers. The one

or more drive motors may power the wheels to provide self-propulsion to the machine. The one or more drive motors may also be mechanically connected to the plurality of propellers to drive the rotation of the propellers.

[0016] Preferably, the propellers are utilized in pairs, although individual and triplet (or more) propellers are contemplated. More preferred is for a plurality of pods of propellers to be utilized. For example, two propeller pods are utilized, with each pod preferably including a pair of propellers. The propeller(s) of each propeller pod are attached to platform, either directly or indirectly. In one embodiment, a plurality of the pairs of propellers are utilized; e.g. a front pair of propellers and a rear pair of propellers. Front and rear being relative, with the only requirement being that the pairs of propellers are located on either side of a center line of the platform. Preferably the pairs are separated sufficiently to allow the agitation of one pair to not interfere with the operation of the other pair.

[0017] Preferably, the propellers are located on the platform such that, when deployed to a lagoon, all propellers are below the surface of the lagoon. This helps prevent problems with cavitation during operation of the propellers

[0018] The direction of rotation of each propeller is controllable, individual and in groups, as is the speed of each propeller.

[0019] The thrust vector of each propeller is adjustable, individually and in groups and maybe in any direction. For example, each propeller may have a thrust vector that is generally vertical, horizontal (whether side-to-side and/or front-to-back), or some combination of vertical and horizontal.

[0020] Preferably the propellers are connected to the platform that allows the propeller to have their thrust vectors adjusted in real time (such as when the machine is located in a lagoon). Also, the thrust vectors may be adjusted continuously or on an intermittent basis, such as to provide different types of agitation and/or propulsion.

[0021] In one embodiment, the propellers are attached to the platform with a joint and an actuator. The joint provides many degrees of freedom for the movement of the propeller, and the actuator moves the propeller to change its thrust vector. Suitable types of actuators include hydraulic cylinder driven mechanism, hydraulic rotary actuators, etc. The actuators may be powered by the engine or another power source.

[0022] Preferably the propellers are driven (i.e. rotated) by one or more hydraulic motors. The hydraulic motors, in turn, may be connected to an engine (which may also drive the wheels).

[0023] In addition to providing agitation, the propellers may be used to provide propulsion to the machine when the machine is in a lagoon (e.g. floating), both changing the speed of rotation of the propellers and/or changing the thrust vectors of the propellers.

[0024] The operation of the propellers are controlled by one or more controller units that send or relay instructions to the motors propellers regarding the direction of rotation and speed of rotation of the propellers. The controller unit also controls the adjustment of the thrust vectors of the propellers through the actuator that permits the changing of the thrust vectors of the propellers. The operation of each propeller can be controlled individually or as part of a group of some or all of the propellers. For example, only the left-front propeller is operated or only the left propellers are operated together. This provides fine controller and gross control of the propulsion and/or agitation provided by the propellers. Furthermore, each characteristic of the operation of the propellers can be controlled individually or as part of a group of some or all of the propellers. For example, the left-front propeller can be operated to provide a downward thrust vector, while the left-back propeller can be operated to provide an upward thrust vector.

[0025] The machine as a whole, and the component parts, preferably are capable of operating autonomously and/or remotely from any human operator.

[0026] Users of this equipment have a need for low maintenance/low wear over time, the ability to drive the vehicle up the steep and slippery banks of recently emptied manure lagoons, and have a simplified system that is reliable to use. Breakdowns are costly, and when they happen, the equipment is typically out in the middle of a manure lagoon, which is difficult and dangerous to reach.

[0027] Users also expect the mixing/agitation ability to perform well. It is important to agitate and mix all the nutrients and solids that settle to the bottom of deep pits and the machine needs to move fluid at velocities high enough to keep them suspended while other equipment pumps it out of the lagoon to the field. The idea is to apply a consistent nutrient content to the field throughout the entire volume of liquid pumped from the lagoons. If not

mixed properly, there will be nutrient deficient water pumped out at the beginning from the top of the lagoon and will be too nutrient rich with high solids toward the end and bottom of the lagoon.

[0028] In a preferred embodiment, the present invention used large diameter propellers directly driven from their own hydraulic motor, through a bearing housing/load adaptor. Hydraulic flow and pressure comes from a hydraulic pump directly coupled to an engine. There are four propellers set at opposing angles to one another set toward the extents (corners) of the machine. Two propellers at the front and two propellers at the rear are coupled together and can articulate to direct flow in a horizontal plane or downward in a vertical plane. There are few moving parts that need maintained since propulsion and agitation is achieved simply by rotating the multiple propellers at different rates, which creates thrust vectors in different directions to move the vehicle. There are no rotating nozzles, no high-pressure and sand-laden liquid moving through pipes and causing wear and water hammer effect when a gate valve shuts, and no gearboxes transferring energy to a centrifugal pump. In the current solution, sand-laden liquid passes by the propeller and is moved downward or outward for mixing rather than flowing through piping, which wears everything over time. To maintain, simply un-bolt the propeller and replace. Through the use of four propellers, the invention is able to cause four times greater fluid movement than high velocity nozzles from a single submerged centrifugal pump.

[0029] The present invention uses fewer mechanical and electrical components, meaning less maintenance and fewer parts that can fail and potentially cause down time. Since four submerged propellers are always underwater, this machine will not have the cavitation problems caused by centrifugal pumps that require priming and risks losing prime in certain scenarios. The current solution also creates greater flow and disturbance of a greater volume of liquid, which is important when suspending solids in manure lagoons that contain millions of gallons.

[0030] In addition to the described devices, the present invention also includes method of the using and making of the described devices.

[0031] It will be further appreciated that functions or structures of a plurality of components or steps may be combined into a single component or step, or the functions or

structures of one-step or component may be split among plural steps or components. The present invention contemplates all of these combinations. Unless stated otherwise, dimensions and geometries of the various structures depicted herein are not intended to be restrictive of the invention, and other dimensions or geometries are possible. Plural structural components or steps can be provided by a single integrated structure or step. Alternatively, a single integrated structure or step might be divided into separate plural components or steps. In addition, while a feature of the present invention may have been described in the context of only one of the illustrated embodiments, such feature may be combined with one or more other features of other embodiments, for any given application. It will also be appreciated from the above that the fabrication of the unique structures herein and the operation thereof also constitute methods in accordance with the present invention. The present invention also encompasses intermediate and end products resulting from the practice of the methods herein. The use of "comprising" or "including" also contemplates embodiments that "consist essentially of" or "consist of" the recited feature.

[0032] The explanations and illustrations presented herein are intended to acquaint others skilled in the art with the invention, its principles, and its practical application. Those skilled in the art may adapt and apply the invention in its numerous forms, as may be best suited to the requirements of a particular use. Accordingly, the specific embodiments of the present invention, as set forth, are not intended as being exhaustive or limiting of the invention. The scope of the invention should, therefore, be determined not with reference to the above description, but should instead be determined with reference to the appended claims, along with the full scope of equivalents to which such claims are entitled. The disclosures of all articles and references, including patent applications and publications, are incorporated by reference for all purposes.

What is claimed is:

1. The devices as shown and described above.
2. The methods as shown and described above.