US 20210394571A1

(19) United States
(12) Patent Application Publication
Minino et al.
(10) Pub. No.: US 2021/0394571 A1
(43) Pub. Date: Dec. 23, 2021

(54) **AMPHIBIOUS VEHICLE**

(71) Applicant: **BAZOOKA-FARMSTAR, LLC**, Washington, IA (US)

(72) Inventors: **Phillip Minino**, Washington, IA (US); **Jeffery Huber**, Wellman, IA (US); **Matthew Hirsch**, Washington, IA (US); **Jason Albright**, Wellman, IA (US)

(21) Appl. No.: **17/351,841**

(22) Filed: **Jun. 18, 2021**

Related U.S. Application Data

(60) Provisional application No. 63/104,887, filed on Oct. 23, 2020, provisional application No. 63/040,562, filed on Jun. 18, 2020.

Publication Classification

(51) **Int. Cl.**

B60F 3/00	(2006.01)
B63H 1/14	(2006.01)
B63H 21/165	(2006.01)
G05D 1/00	(2006.01)
B63H 25/42	(2006.01)

(52) **U.S. Cl.**

CPC ***B60F 3/0038*** (2013.01); ***B63H 1/14*** (2013.01); ***B63H 25/42*** (2013.01); ***G05D 1/0088*** (2013.01); ***G05D 1/0011*** (2013.01); ***B63H 21/165*** (2013.01)

(57) **ABSTRACT**

An amphibious vehicle having a frame that includes a plurality of floatable members. Mounted to the frame is one or more power sources. Also mounted to the frame and connected to the power source are a plurality of propellers with each of the plurality of propellers having a thrust vector configured to be adjusted to provide agitation and propulsion. In addition, mounted to the frame are a plurality of ground engaging devices and one or more pumps.

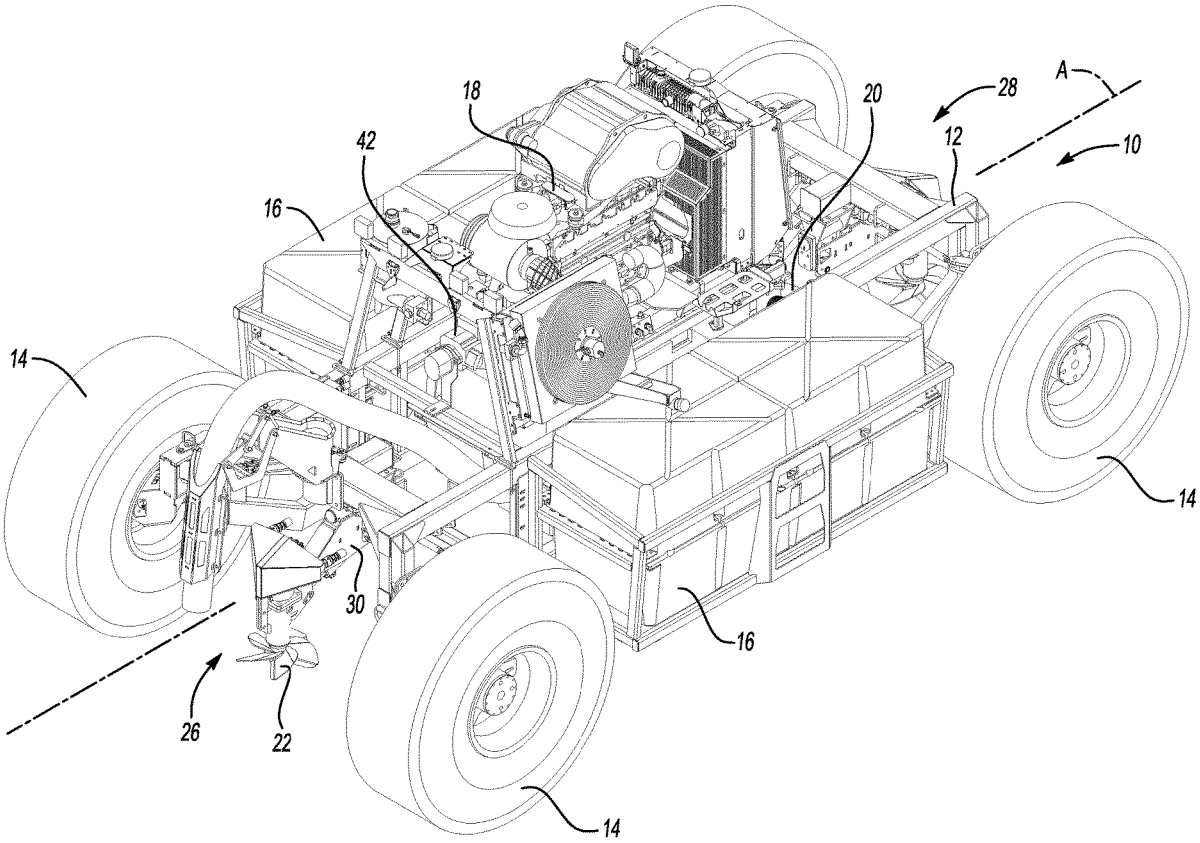

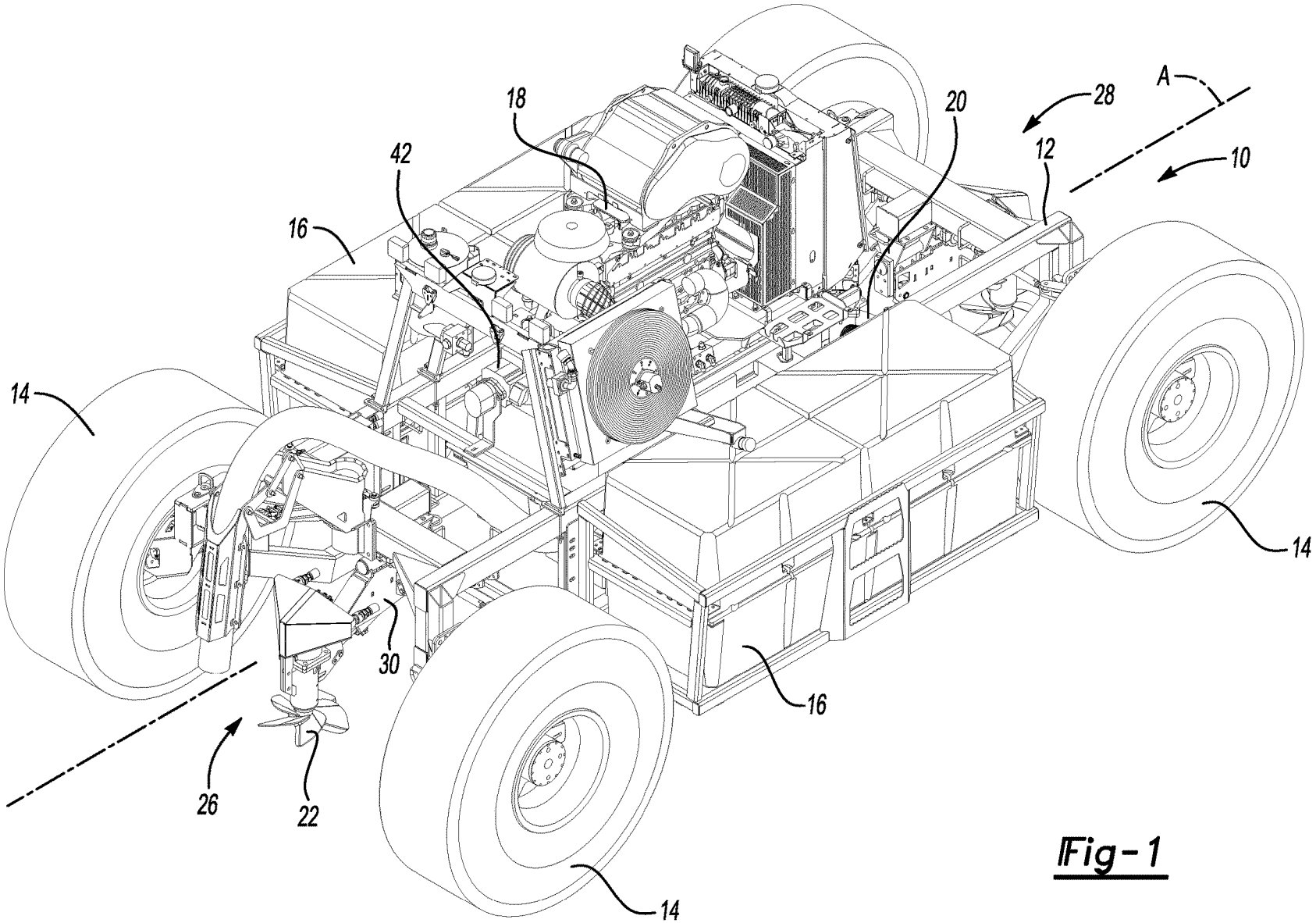

Fig-1

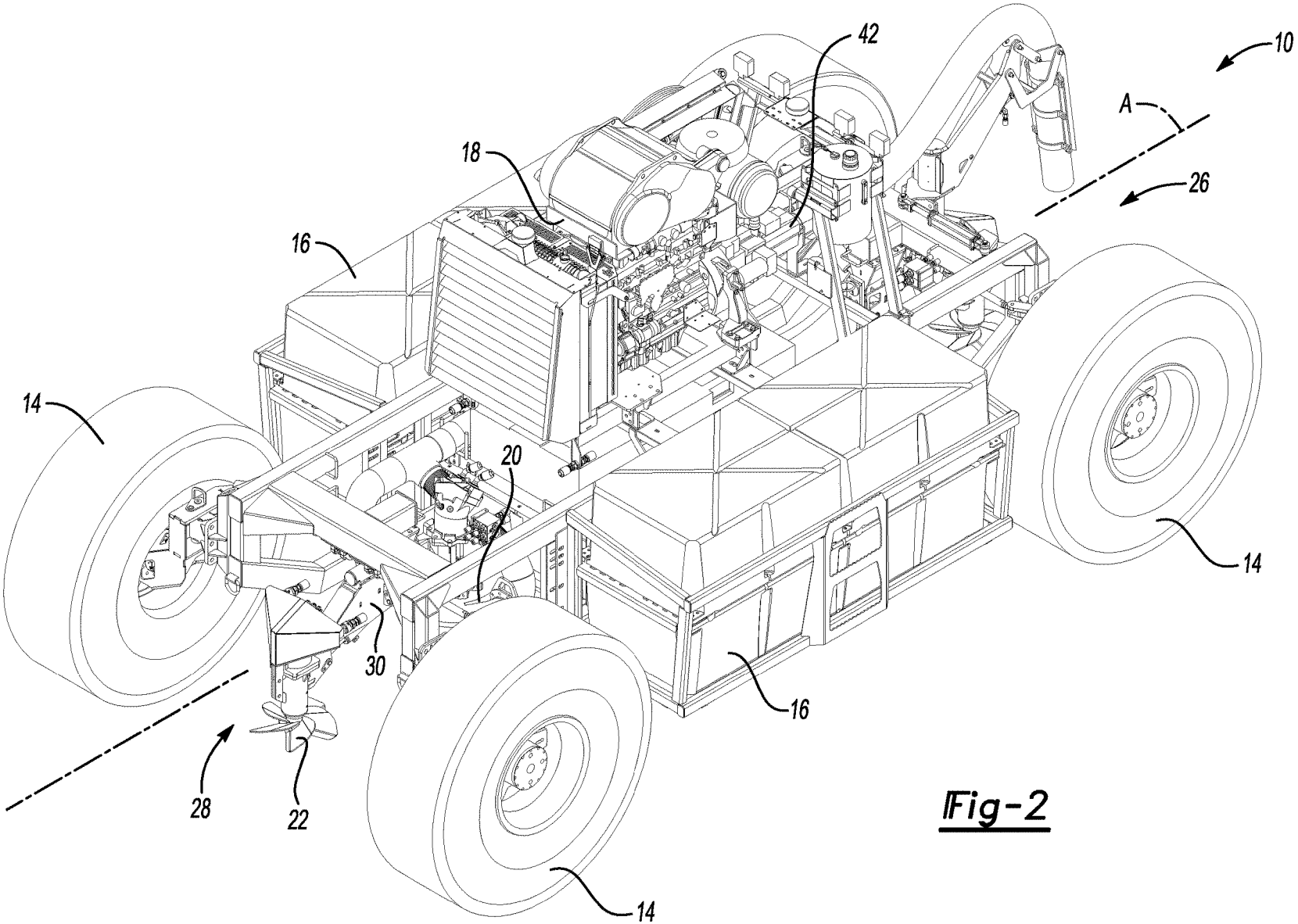

Fig-2

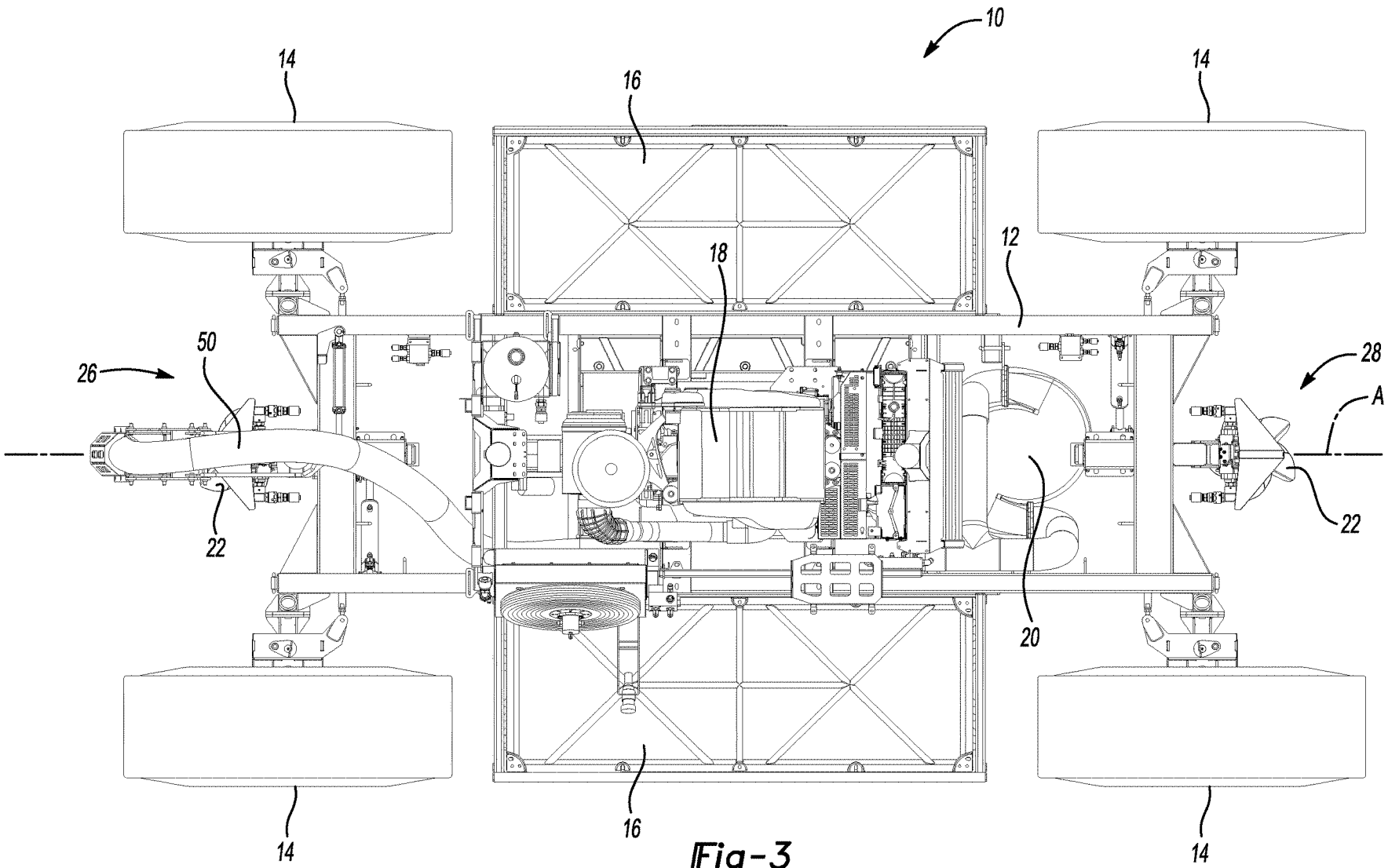

Fig-3

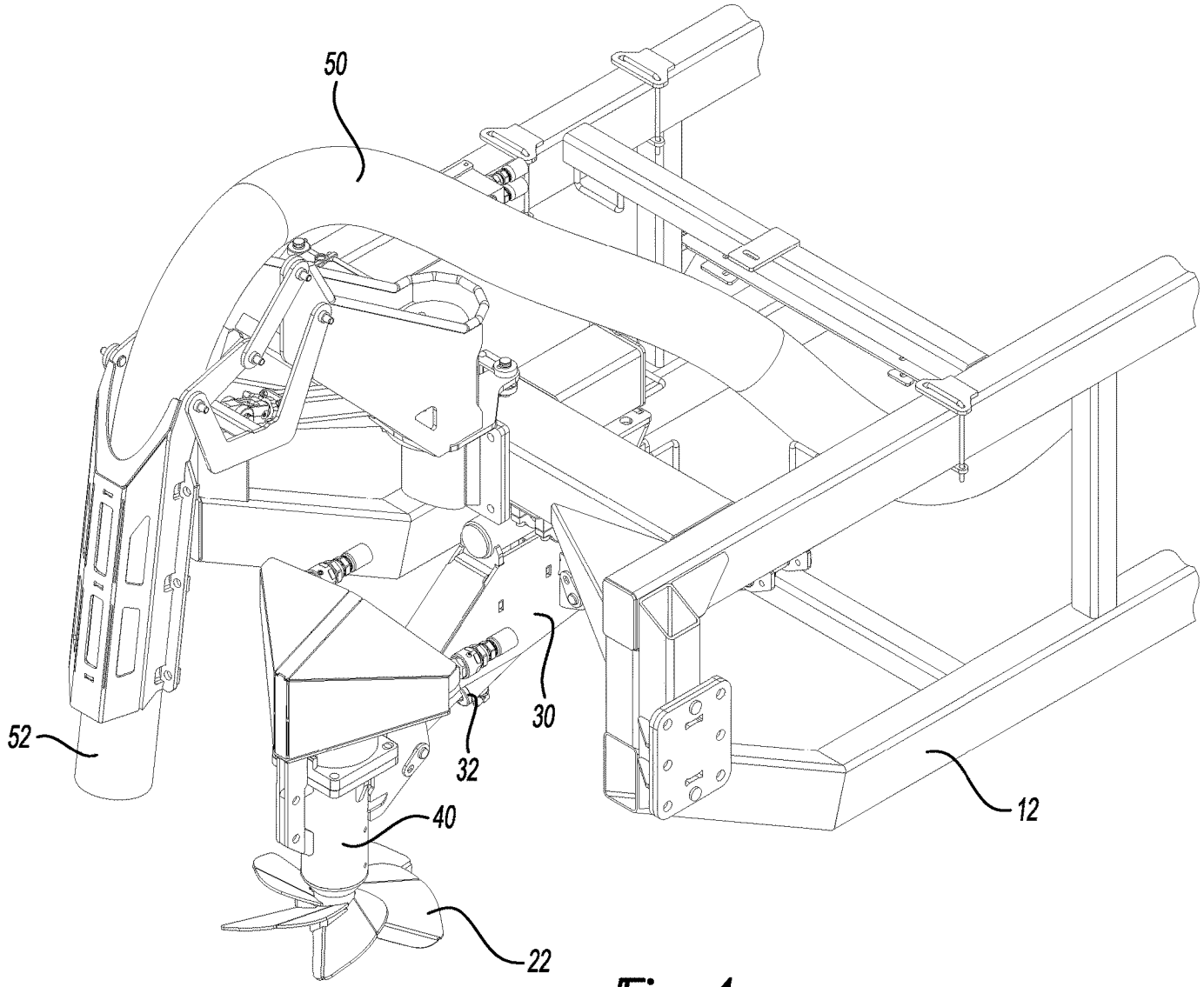

Fig-4

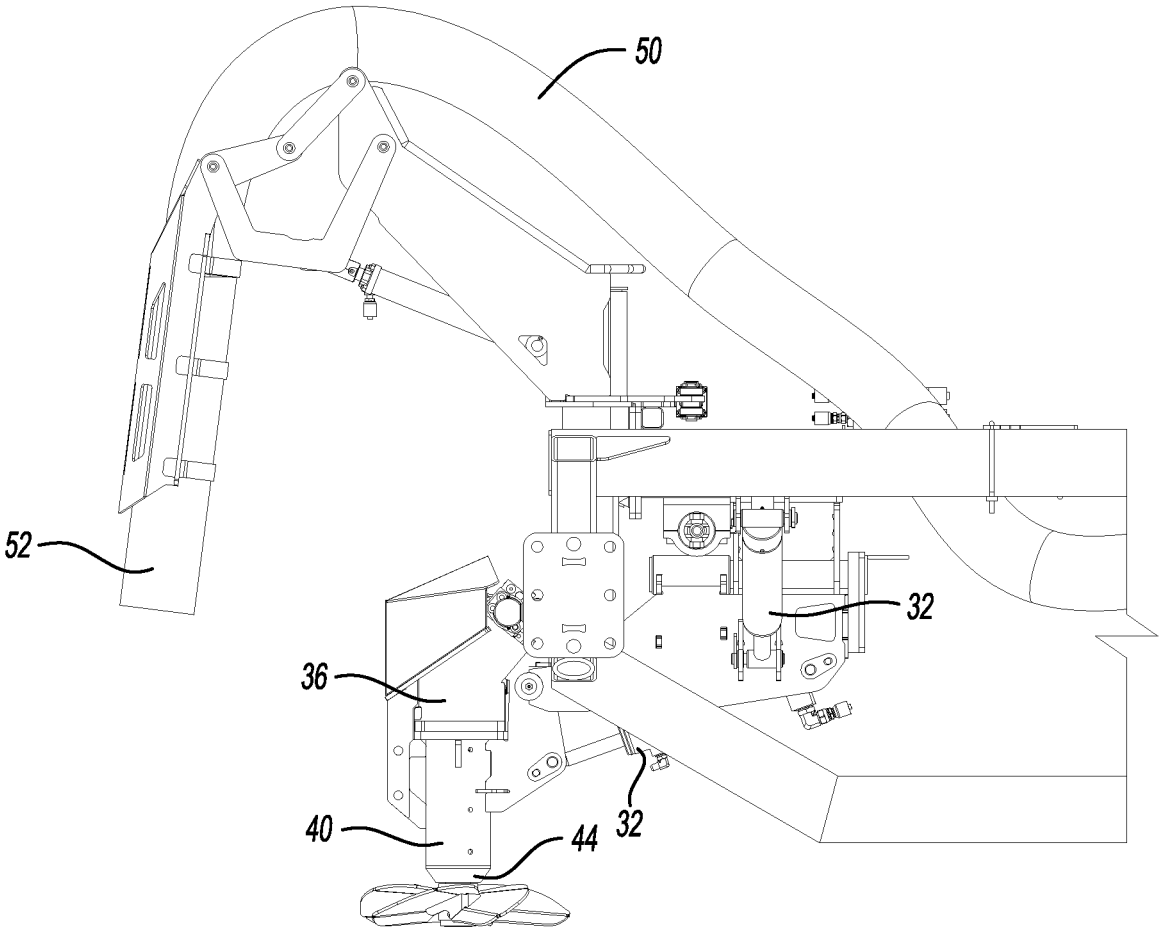

Fig-5

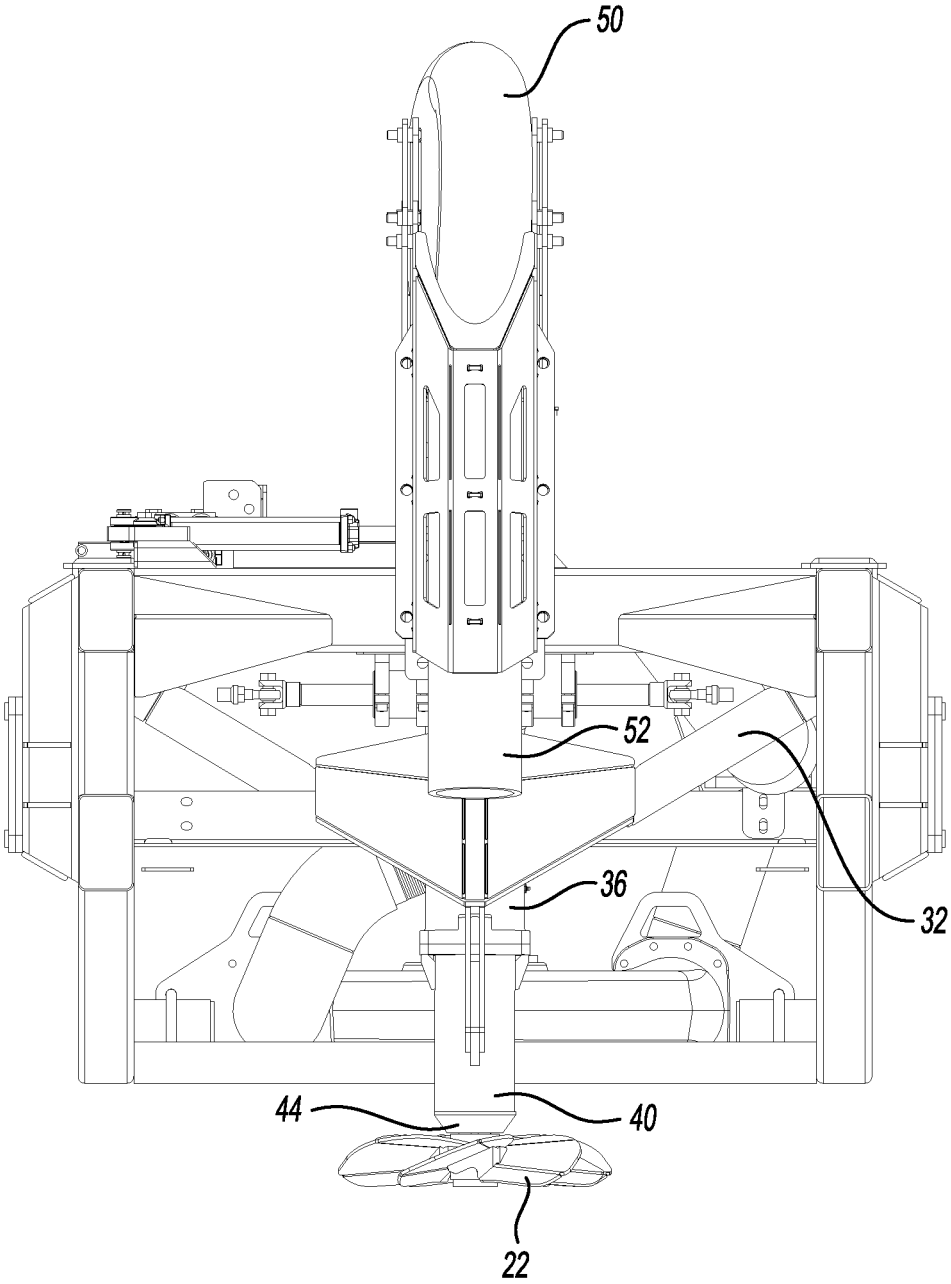

Fig-6

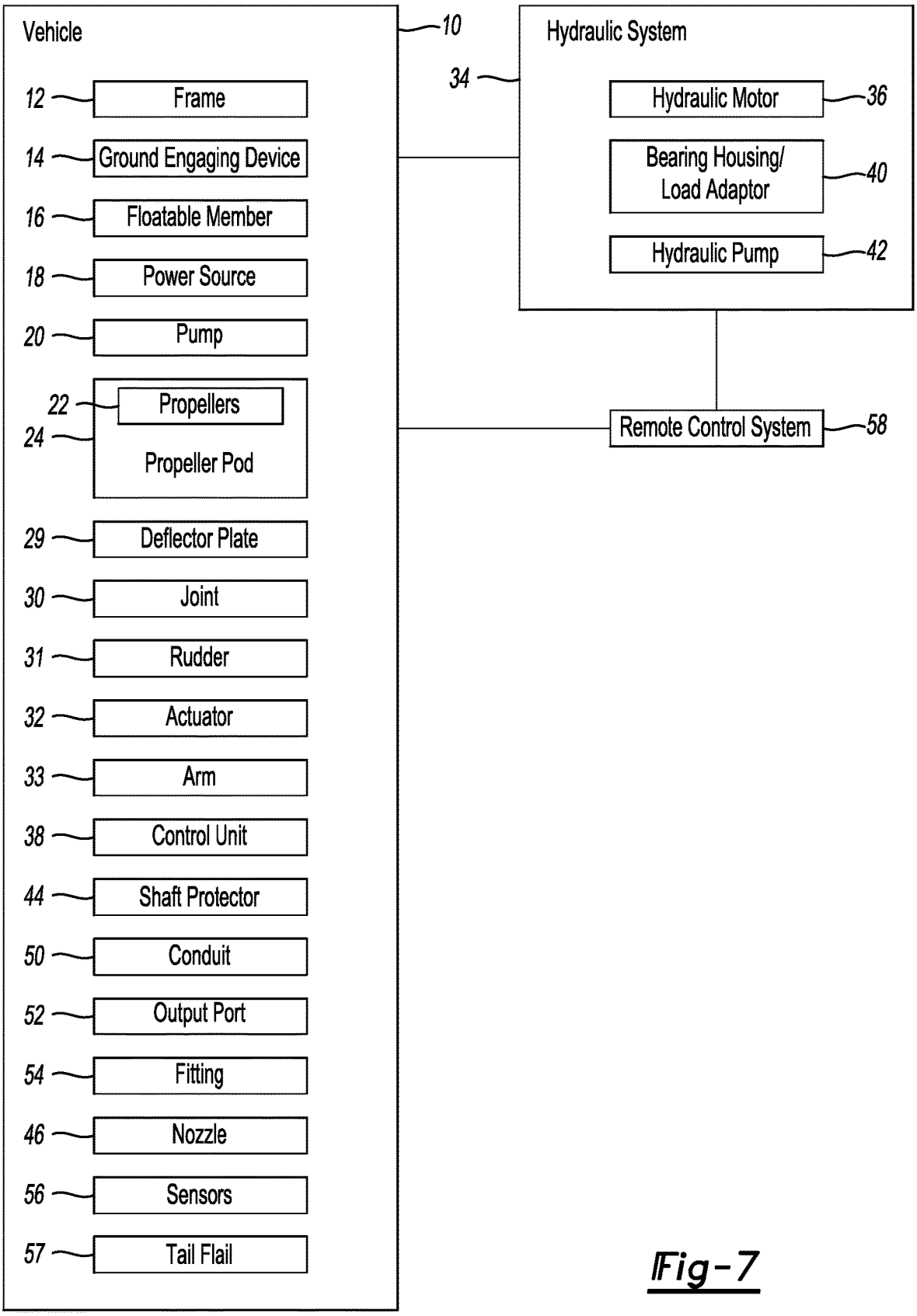
Vehicle
10
12
Frame
14
Ground Engaging Device
16
Floatable Member
18
Power Source
20
Pump
22
Propellers
24
Propeller Pod
29
Deflector Plate
30
Joint
31
Rudder
32
Actuator
33
Arm
38
Control Unit
44
Shaft Protector
50
Conduit
52
Output Port
54
Fitting
46
Nozzle
56
Sensors
57
Tail Flail
Hydraulic System
34
Hydraulic Motor
36
Bearing Housing/
Load Adaptor
40
Hydraulic Pump
42
Remote Control System
58

Fig-7

AMPHIBIOUS VEHICLE

CROSS REFERENCE TO RELATED APPLICATION

[0001] This application claims the benefit of the priority of U.S. Provisional Application No. 63/040,562 filed on Jun. 18, 2020 and U.S. Provisional Application No. 63/104,887 filed on Oct. 23, 2020, the contents of these applications are hereby incorporated by reference in their entirety.

BACKGROUND OF THE INVENTION

[0002] The present invention is directed to an amphibious vehicle and more particularly an amphibious vehicle having one or more propellers for agitation, propulsion, and steering.

[0003] Standing ponds or lagoons are used for holding or containing both solid and liquid materials. Both natural occurring and man-made lagoons may need to be treated or otherwise utilized. For example, natural ponds may need vegetation treated or physical removal and manmade lagoons may need to be stirred in order to facilitate removal of the material in the lagoon. In one situation, manure lagoons need to be agitated in order to facilitate removal of manure slurry, which can then be applied as part of growing crops. Machines used for these activities include boats, bottom crawlers, and combination machines that both float and ride on the bottom of the lagoon. Agitation is usually accomplished through recirculating liquid from the lagoon or through propellers. Recirculating liquid agitation rely on pumping liquid through nozzles directed into or through the lagoon. Propellers at the surface and under the surface may be another source of agitation.

[0004] Existing solutions have several shortcomings. Most existing units use submerged centrifugal pumps driven from an engine/gearbox drivetrain, that then pump the slurry through piping and nozzles which are opened and closed to steer the boat with a vast network of hydraulic valving and controls. The main problem with this type of solution is the wear and tear (and thus reliability) of the unit since every gallon used for power and mixing has to flow through a single pump. Use of very high velocity and, in some solutions, high pressures to do this, which is cause for excess and premature wear when pumping hard sand mixtures. The network of hydraulic valves and piping gate valves are complex (e.g. many moving components) that are difficult to maintain and become unreliable after even short term use.

[0005] Other solutions use high pressure/high velocity nozzles to mix solids and nutrients. The high velocity and relatively low volume of liquid have very high energy dissipation when contacting the main body of water/liquid manure. They lack the ability to agitate deep lagoons. They also use these nozzles to steer the vehicle when floating. Use of a single power source to provide both agitation and propulsion also makes it difficult to do either. If agitation is sufficient then it is difficult to hold the platform steady. Conversely, if the propulsion system holds the platform steady, then the agitation is insufficient.

[0006] Thus, known solutions fail to provide adequate agitation, maneuverability of the machine, or have other failings, such as cost.

[0007] An objective of the present invention is to provide an amphibious vehicle that provides adequate agitation.

[0008] Another objective of the present invention is to provide an amphibious vehicle with improved maneuverability.

[0009] A still further objective of the present invention is to provide an amphibious vehicle having fewer parts requires less maintenance and lowers the cost of ownership.

[0010] These and other objectives will be apparent to those having ordinary skill in the art based upon the following written description, drawings and claims.

SUMMARY OF THE INVENTION

[0011] An amphibious vehicle includes a frame having one or more floatable members. Mounted to the frame is one or more power sources. Also, one or more propellers are mounted to the frame and connected to the power source such that each of the one or more propellers have a thrust vector configured to provide agitation and/or propulsion. In addition one or more ground engaging devices and one or more pumps are connected to the frame.

[0012] The one or more propellers are mounted to the frame in a manner that allows the thrust vector of each propeller to be adjusted, in real time, both continuously and intermittently. The thrust vectors of each propeller are adjusted both individually and in groups. In one example the propellers are attached to the frame with a joint and are also connected to an actuator. In another example the propellers are connected to the frame with an arm that is adjustable in length.

[0013] The vehicle and its components are controlled and operated with a control unit. As an example, with respect to the propellers, the control unit controls the direction of rotation, the speed of rotation, and the position of each thrust vector.

[0014] The vehicle also has in one embodiment at least one nozzle, or alternatively a conduit with an output port, that are connected to the pump. An adjustable deflector device could be used in relation to the nozzle, output port, and/or propellers to affect thrust vectors. Also, the vehicle and its component parts are operated either autonomously with the control unit or through a remote control system.

BRIEF DESCRIPTION OF THE DRAWINGS

[0015] FIG. **1** is a perspective view of an amphibious vehicle;

[0016] FIG. **2** is a perspective view of an amphibious vehicle;

[0017] FIG. **3** is a top plan view of an amphibious vehicle;

[0018] FIG. **4** is a perspective view of a portion of an amphibious vehicle;

[0019] FIG. **5** is a side view of a portion of an amphibious vehicle;

[0020] FIG. **6** is a front view of an amphibious vehicle; and

[0021] FIG. **7** is a schematic view of an amphibious vehicle.

DETAILED DESCRIPTION

[0022] Referring to the figures, an amphibious vehicle **10** includes a platform or frame **12** to which one or more ground engaging devices **14** such as wheels, a track, or the like are operably connected. Encompassed or disposed with in the frame **12** is one or more buoyant or floatable members **16**. Mounted to the frame **12** is one or more power sources **18**

which are of any type such as a drive or combustion engine or motor, or one or more batteries. Also mounted to the frame **12** is one or more pumps **20**, and preferably two or less, configured to pump liquid. The pumps **20** are of any type and include centrifugal pumps and may have one or more outlets, and preferably two or less, connecting to conduits. The pumps also preferably are submersible, but may also be non-submersible and may be reversible to draw liquid in as well as expel liquid. The power source **18** is configured to provide power to both the ground engaging devices **14**, the one or more pumps **20**, and the one or more propellers **22**. The power is provided in any manner such as mechanically, hydraulically, electrically, or the like.

[0023] Also mounted to the frame **12** are one or more propellers **22**, or propeller pods **24** that comprise more than one propeller. The propellers **22** are connected to the frame **12** either directly or indirectly and in one example one or a pair of propellers **22** are connected to the front **26** of the frame **12** and one or a pair of propellers **22** are connected to the rear **28** of the frame **12**. In addition, the propellers **22** are positioned along a central axis A or each pair of propellers **22** are positioned on each side of a central axis A that runs the length of the frame **12**. The pair of propellers **22** are further positioned in relation to one another to allow for agitation of a pond or lagoon to occur without the propellers interfering with one another and are located such that when the vehicle is deployed into a lagoon the propellers are positioned below the surface of the lagoon which helps to prevent problems with ventilation during operation of the propellers. Each propeller **22** has a thrust vector.

[0024] The propellers **22** are connected to the frame **12** in a manner that allows the thrust vector of each propeller to be adjusted, preferably in real time, when the vehicle **10** is located in the lagoon. The thrust vectors can also be adjusted continuously or on an intermittent basis so as to provide different types of agitation, steering, and/or propulsion. For example, each propeller **22** would have a thrust vector based on position that is generally vertical, horizontal (side to side or front to rear), or angled at some position that is a combination of vertical and horizontal. In one example one or more thrust vectors are pointed upward toward the surface of the lagoon to cause agitation at the surface. In another example individual propellers **22** are held steady while the thrust vectors of other propellers **22** are adjusted. While the thrust vector of one propeller **22** is held steady, thrust can be deflected through use of a one or more fixed or moveable deflector devices **29** such as a plate, a ring, or the like to assist in steering the vehicle **10**. Also, one or more rudders **31** are used to steer or assist in steering the vehicle **10**.

[0025] In addition, the thrust vectors of each propeller **22** are adjustable either individually or in groups as is the speed of rotation of each propeller **22**. In one example the propellers **22** are attached to the frame **12** with a joint **30** and are also connected to an actuator **32**. The joint **30** provides many degrees of freedom of movement for the propeller **22** and the actuator **32** is configured to move the propeller **22** to change the propeller's **22** thrust vector. The actuator **32** is of any type including but not limited to a hydraulic cylinder driven mechanism, hydraulic rotary actuators, or the like. Also, the actuators **32** are powered by the power source **18**. In another example, the propellers **22** are connected to the frame **12** with an arm **33** that is adjustable in length to permit the depth of the propeller **22** to be changed as desired.

[0026] The propellers **22** are driven by the power source **18** and are preferably driven by a hydraulic system **34** having at least one hydraulic pump **42** and hydraulic motor **36**. The hydraulic pumps **42**, in addition to providing power to the propellers **22**, can also be used to drive the ground engaging devices **14**. Alternatively, the propellers **22** are mechanically or electrically driven by the power source **18**. In addition to providing agitation, the propellers **22** are also configured to provide propulsion to the vehicle **10** when the vehicle **10** is in the lagoon (e.g. floating).

[0027] The propellers **22** are connected to and controlled by one or more control units **38** that send and/or relay instructions to the power source **18**, motors **36**, actuators **32**, and propellers **22** regarding the direction of rotation, speed of rotation and the position of the thrust vectors of the propellers **22**. In addition, both the direction of rotation of each propeller **22** the speed of rotation of each propeller **22**, and the position of the thrust vector of each propeller **22** is controlled individually and in groups. For example, a front left propeller **22** is operated alone, or alternatively both the left front and the left rear propellers **22** are operated as part of a group. Having the ability to selectively control the propellers **22** provides for both fine and gross control of the propulsion and/or agitation through the propellers **22**. In another example all operating parameters of each propeller **22** are controlled individually or in a group such as when the left front propeller **22** is positioned to provide a downward thrust vector at a first speed while the left rear propeller is positioned to provide an upward thrust vector at a second speed. Also, rather than using propellers **22** in each corner of the frame **12** a single propeller **22** at the front of the frame **12** and a single propeller **22** at the rear of the frame **12** is used in the same manner.

[0028] In another example each propeller **22** is driven by its own hydraulic motor **36**, through a bearing housing/load adaptor **40**. Hydraulic flow and pressure is provided from a hydraulic pump **42** that is directly coupled to an engine **18**. With four propellers **22** positioned on the frame **12**, the two propellers **22** in the front are coupled together while the two propellers **22** at the rear are coupled together and are adjustably positioned to direct flow in a horizontal plane or in a downward vertical plane. To reduce or eliminate tangling of debris from a rope, plant matter or the like a shaft protector **44** is used which permits the shaft to continue to rotate even if debris is caught on the protector **44**. Ragless propellers **22** may also be used to push debris away from the propellers **22** to reduce the chance of debris becoming entangled in the propeller **22**.

[0029] In addition to the propellers **22**, a conduit outlet or nozzle **46** is located on the frame **12** such that when the vehicle is deployed to a lagoon, the nozzle **46** may be positioned above or below the surface of the lagoon. The nozzles **46** and **48** are connected to the one or more pumps **20**. The one or more pumps **20** may be connected to the nozzles **46** and **48** either in parallel, in series, or in some other combination. Each nozzle **46** and **48** has a thrust vector that is adjustable either individually or in groups in any direction including generally vertical, horizontal, side-to-side, and/or forward to back or some combination of vertical and horizontal. The thrust vectors may also be adjusted through use of deflector devices **29**. The thrust vectors of the nozzles **46** and **48** may be adjusted in real time, continuously or on an intermittent basis in order to provide different types of agitation, propulsion or both.

[0030] In one example the nozzles **46** and **48** are attached to the frame **12** with a joint **30** and an actuator **32**. The joint **30** provides many degrees of freedom for the movement of the nozzles **46** and **48** and the actuator **32** moves the nozzles **46** and **48** to change their thrust vectors. In addition to providing agitation, the nozzles **46** and **48** may be used to provide propulsion for the vehicle **10** when the vehicle is floating in a lagoon by changing both the thrust of the nozzle **46** and **48** and/or changing the thrust vectors of the nozzle **46** and **48**. Preferably the propellers **22** and nozzles **46** and **48** are separately powered which provides for fine control of the propulsion and allows the frame to be easily held steady in a desired location.

[0031] The operation of the nozzles **46** and **48** are controlled by one or more control units **38** that send or relay instructions to the motors or pumps regarding the thrust of the nozzles **46** and **48**. The control unit **38** also controls the adjustment of the thrust vectors of the nozzles **46** and **48** through the actuator **32**. The operation of each nozzle **46** and **48** is controlled individually or as part of a group of some or all of the nozzles **46** and **48**. Further, each characteristic of the operation of each nozzle **46** and **48** is controlled individually or as part of a group of some or all of the nozzles **46** and **48**. The one or more control units **38** also sends or relays instructions regarding the operation of the other components of the vehicle such as the drive motors, pumps, nozzles, actuators, deflector plates, rudders and the like.

[0032] In addition to, or instead of, the nozzles **46** and **48**, a conduit **50** having an outlet port **52** that is connected to the pump **20** is used. The conduit **50** may include a fitting **54** for the connection of an additional conduit **50** in order to move fluid from the vehicle **10** to another device on shore. The conduit has a fixed or aimable position and is used with a diffuser, flow conditioner, deflector device or the like positioned near or adjacent to the outlet port **52** to increase the velocity of the stream, the direction of the stream, and/or affects the flow pattern of liquid moved by the liquid exiting the conduit **50**. The outlet ports **52** of the conduits **50** are positioned above or below the surface of the lagoon to provide a desired agitation effect above or below the surface of the lagoon. While not required, eductors, diffusers, or the like are located near or adjacent the outlet ports **52**. In one example an outlet port **52** is positioned at the lagoon surface and a deflector plate **29** is positioned below the lagoon surface. In addition to providing agitation within the lagoon, the conduits **50** are also utilized to supply liquid to the banks of the lagoon in order to break up the banks or wash the banks.

[0033] In addition to, or alternatively to, propellers **22**, nozzles **46** and **48**, and/or conduits **50**, other devices may be used to provide or assist with agitation. As examples augers, spinning blades, scrapers, a loader bucket, or the like may be used to draw in solids or liquids from the lagoon toward the vehicle **10** to provide material to be agitated by the vehicle **10**. The other devices would be fixed or adjustably connected to the frame **12**. For example a scraper is connected to an extendable arm **33** and is used to pull solids from the surface of the lagoon or the banks toward the agitation devices of the vehicle **10**. Also, connected to the frame **12** could be a tail flail or flail mower type **57**. The tail flail is used to clean banks or could be submerged to break up solids from the bottom of the lagoon.

[0034] Mounted to the vehicle **10** are one or more sensors **56** that provide information to the control unit **38** in part to provide alerts and warnings. The sensors **56** monitor the operation of the vehicle **10** as a whole, the individual components of the vehicle **10**, ambient conditions, the position and movement of the vehicle **10** and/or provide information about the operating location of the vehicle **10**. The sensors **56** operate in any manner such as through use of frequency of electromagnetic energy including infrared, visible, and ultraviolet light such as lidar or radar, as well as acoustic energy such as sonar. Particular types of sensors **56** and information include lidar, radar, sonar, optical, bottom density, topographic mapping, position (like GPS), proximity, object avoidance, orientation, heading, incline, accelerometers, vibrometers, and velocity sensors. In one example, the sensors **56** are used to detect solids content (N, P, and K values), temperature and density of liquid and provide information to the control unit **38** in order to track and record the agitation levels of a lagoon. Once the agitation levels start to even/level out an assessment is made as to whether the lagoon is well-agitated and the engine and propeller speeds are controlled/reduced so that the vehicle **10** runs more efficiently as solids need only be ins suspension instead of trying to lift solids from the bottom of the lagoon.

[0035] The vehicle **10** and/or the component parts are controlled and operated partially or fully autonomously and/or remotely by a human operator. Autonomous operations, which are controlled by the control unit **38**, in addition to those already described, include an anchor mode, programmable routing through the lagoon, object avoidance, bounded operational areas and the like. Remote operation includes the control and operation of the machine and/or components both when the vehicle is on the ground, within the lagoon, or both, through use of a remote control system **58**. The remote control system **58** includes wireline or wireless communications that transmit and receive data to and from the vehicle. In addition, the remote control system includes a personal electronic device such as tablet, laptop, or the like. All functions of the vehicle and its component parts are remotely controlled including gross functions such as propulsion on land or in the lagoon, agitation, steering and the like as well as control of the various components to accomplish the gross functions of the vehicle **10**. These include the propellers, pumps, actuators, wheels, power sources, sensors and the like. For example, the speed of rotation of the propellers, and the thrust vectors of the propellers can be controlled remotely as well as other operating characteristics of the propellers.

[0036] In another example, the vehicle **10** is controlled autonomously based upon the depth of the lagoon and/or the bottom density. Using the sensors **56** the bottom surface of the lagoon is scanned and mapped by the control unit **38** using lidar, sonar, radar or the like that is connected either electrically or wirelessly. Based upon this information the control unit **38** directs the vehicle to high spots or mounds of solids and spends more time agitating at the high spots as compared to the low spots. In a similar manner, the vehicle **10** would be directed to spend more time in areas where there was more lower density material at the bottom of the lagoon as compared to the actual lagoon bottom where typically there is a higher-density of clay material.

[0037] In yet another example, using sensors **56** such as lidar, sonar, radar, multiple cameras (infrared and visible light) and the like the control unit autonomously controls the vehicle **10** to avoid objects as well as determines where the

banks of the lagoon are located to avoid the banks. Object avoidance would be for both above and below the liquid surface.

[0038] Accordingly, an amphibious vehicle has been disclosed that has few moving parts that need to be maintained since the propulsion and agitation is achieved simply by rotating the multiple propellers at different rates and positions to create thrust vectors in different directions to move the vehicle. Articulating nozzles are not needed, nor is high-pressure and sand-laden liquid moving through pipes which cause wear and a water hammer effect when a gate valve shuts. Also, no gearboxes are needed to transfer energy to a centrifugal pump. Instead, sand-laden liquid passes by the propeller and is moved downward or outward for mixing rather than flowing though piping, which over time, wears on everything. To maintain the vehicle the propeller only needs to be un-bolted and replaced. When propellers are used, greater fluid movement is achieved as compared to high velocity nozzles from a single submerged centrifugal pump.

[0039] The disclosed vehicle uses fewer mechanical and electrical components which means less maintenance and fewer parts that could fail and cause down time. With submerged propellers, the vehicle will not have plugging problems caused by centrifugal pumps and nozzles that require priming where there is a risk of losing the prime in certain scenarios. The disclosed vehicle creates greater flow and disturbance of a greater volume of liquid which is important when suspending solids in manure lagoons that contain millions of gallons.

[0040] Additional benefits of the disclosed vehicle include satisfaction of a user's need for low maintenance and wear over time, the ability to drive the vehicle up the steep and slippery banks of recently emptied manure lagoons, and access to a simplified system that is reliable to use. Breakdowns are costly and when they happen the equipment is typically in the middle of a manure lagoon where the vehicle is dangerous to reach. The vehicle also satisfies user needs that include the expectation that the mixing and agitation ability will perform well as it is important to agitate and mix all the nutrients and solids that settle to the bottom of deep pits and the vehicle needs to move fluid at velocities high enough to keep them suspended while other equipment pumps the material out of the lagoon to the field. The objective is to apply a consistent nutrient content to the field throughout the entire process of pumping liquid from the lagoon. If not mixed properly, there will be nutrient deficient water pumped out at the beginning from the top of the lagoon and toward the end and bottom of the lagoon there will be a mixture too rich in nutrients with high solids, or becomes too thick to pump to the field.

[0041] From the above discussion and accompanying figures and claims it will be appreciated that the vehicle **10** offers many advantages over the prior art. It will be appreciated further by those skilled in the art that other various modifications could be made to the device without parting from the spirit and scope of this invention. All such modifications and changes fall within the scope of the claims and are intended to be covered thereby. It should be understood that the examples and embodiments described herein are for illustrative purposes only and that various modifications or changes in the light thereof will be suggested to persons skilled in the art and are to be included in the spirit and purview of this application.

What is claimed is:

1. An amphibious vehicle, comprising:
a frame having one or more floatable members;
one or more power sources mounted to the frame; and
one or more propellers mounted to the frame and connected to the power source wherein each of the plurality of propellers has a thrust vector configured to provide agitation and propulsion.

2. The vehicle of claim **1** further comprising one or more ground engaging devices.

3. The vehicle of claim **1** further comprising one or more pumps.

4. The vehicle of claim **1** wherein the one or more propellers are mounted to the frame in a manner that allows the thrust vector of each propeller to be adjustable.

5. The vehicle of claim **4** wherein the thrust vector of each of the one or more propellers is adjustable in real time both continuously and intermittently.

6. The vehicle of claim **4** wherein the thrust vectors of each of the one or more propellers is adjustable individually and in groups.

7. The vehicle of claim **4** wherein the one or more propellers are mounted to the frame with a joint and are also connected to an actuator.

8. The vehicle of claim **4** wherein the one or more propellers are connected to the frame with an arm that is adjustable in length.

9. The vehicle of claim **1** wherein the one or more propellers are driven by a hydraulic system.

10. The vehicle of claim **1** wherein the one or more propellers are controlled by one or more control units.

11. The vehicle of claim **10** wherein the one or more control units control the direction of rotation, the speed of rotation and the position of each thrust vector of each of the one or more propellers.

12. The vehicle of claim **10** wherein the one or more control units controls the one or more propellers individually and in groups.

13. The vehicle of claim **1** wherein each of the one or more propellers have a shaft protector.

14. The vehicle of claim **1** further comprising at least one conduit having an outlet port connected to a pump.

15. The vehicle of claim **14** further comprising at least one nozzle connected to the at least one conduit.

16. The vehicle of claim **1** wherein a deflector device adjusts the thrust vector of each of the one or more propellers.

17. The vehicle of claim **1** further comprising one or more sensors configured to provide information about the operation of the vehicle and ambient conditions to a control unit.

18. The vehicle of claim **1** wherein the vehicle is operated autonomously.

19. The vehicle of claim **1** wherein the vehicle is operated by a remote control system.

* * * * *