US005267830A

United States Patent [19]

Wickoren et al.

[11] Patent Number: 5,267,830

[45] Date of Patent: Dec. 7, 1993

[54] PUMP FOR ABRASIVE MATERIALS

[75] Inventors: **Dean R. Wickoren**, Paola; **Richard J. Wickoren**, Overland Park; **Troy L. Pennington**, Olathe; **Lawrence E. Klote**, Leawood; **Lawrence R. Gardner**, Spring Hill; **Ronald L. Dellinger**, Overland Park, all of Kans.

[73] Assignee: **Innovative Material Systems, Inc.**, Olathe, Kans.

[21] Appl. No.: **959,521**

[22] Filed: **Oct. 13, 1992**

Related U.S. Application Data

[63] Continuation of Ser. No. 642,795, Jan. 18, 1991, abandoned.

[51] **Int. Cl.**[5] **F01D 3/02**

[52] **U.S. Cl.** **415/99**; 415/102; 415/143; 37/195; 37/320; 37/329; 37/337

[58] **Field of Search** 415/93, 97, 99, 101, 415/102, 121.3, 143, 200, 225; 37/58, 59, 60, 61, 64, 66, 68, 69, 70, 195

[56] **References Cited**

U.S. PATENT DOCUMENTS

674,832	5/1901	Berg .	
687,853	12/1901	Richards .	
1,029,554	6/1912	Neumayer .	
1,262,240	4/1918	Okun .	
1,494,642	5/1924	Swintek	415/99
1,769,886	7/1930	Moody .	
2,184,496	12/1939	Hale	415/99
2,655,869	10/1953	Murphy .	
2,808,782	10/1957	Thompson et al. .	
2,815,716	12/1957	Ransohoff .	
3,196,799	7/1965	Loss .	
3,253,357	5/1966	Allard	415/122.1
3,371,614	3/1968	Crisafulli .	
3,583,826	6/1971	Schonwald	415/143
4,014,626	3/1977	Grenn .	
4,083,647	4/1978	Tatkov et al. .	
4,526,507	7/1985	Bingler	415/143
4,792,275	12/1988	Weinrib .	
4,872,809	10/1989	Addie et al. .	
4,902,199	2/1990	McDonald et al.	415/99

FOREIGN PATENT DOCUMENTS

1435827 11/1988 U.S.S.R. 37/58

OTHER PUBLICATIONS

Issue of World Dredging Mining & Construction, Jan.-/Feb. 1989, pp. 3,5-6.

Issue of World Dredging Mining & Construction, Nov/Dec. 1989, pp. 3, 15-17.

Issue of World Dredging Mining & Construction, Feb. 1990, p. 9.

Pump Application Engineering, Hicks and Edwards, May 1973, pp. 232-233.

Primary Examiner—Edward K. Look

Assistant Examiner—James A. Larson

Attorney, Agent, or Firm—Hovey, Williams, Timmons & Collins

[57] **ABSTRACT**

A pump for handling abrasive materials includes a housing having two chambers. A shaft mounts a high pressure impeller and a high volume impeller in respective chambers of the housing, each chamber having a separate and opposite inlet. A channel is provided to divert a portion of the flow generated by the high pressure impeller to a purge ring adjacent the primary inlet corresponding to the high volume impeller. The purge ring directs a flow of relatively abrasive-free liquid toward the inlet to reduce wear on the housing and high-volume impeller. Another part of the flow from the high pressure impeller is diverted through the housing to isolate portions of the housing and the high volume impeller from the abrasive material laden intake through the primary inlet. The invention also includes a method of dredging abrasive materials which includes immersing a pump into a liquid in proximity to a deposit of abrasive materials, directing a first flow of liquid containing abrasive materials into a primary inlet of the pump and directing a second, relatively abrasive-free flow of liquid into a secondary inlet, circulating a portion of the abrasive-free flow toward the intake, and combining the first and second flows in the pump before discharging the combined flow to a remote location.

21 Claims, 3 Drawing Sheets

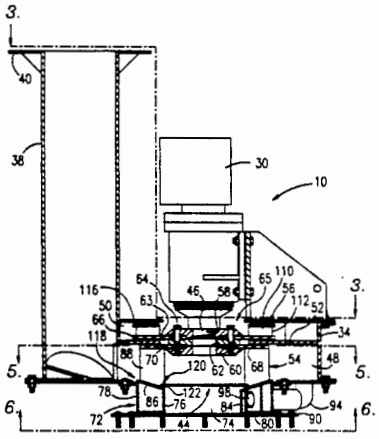

FIG. 1.

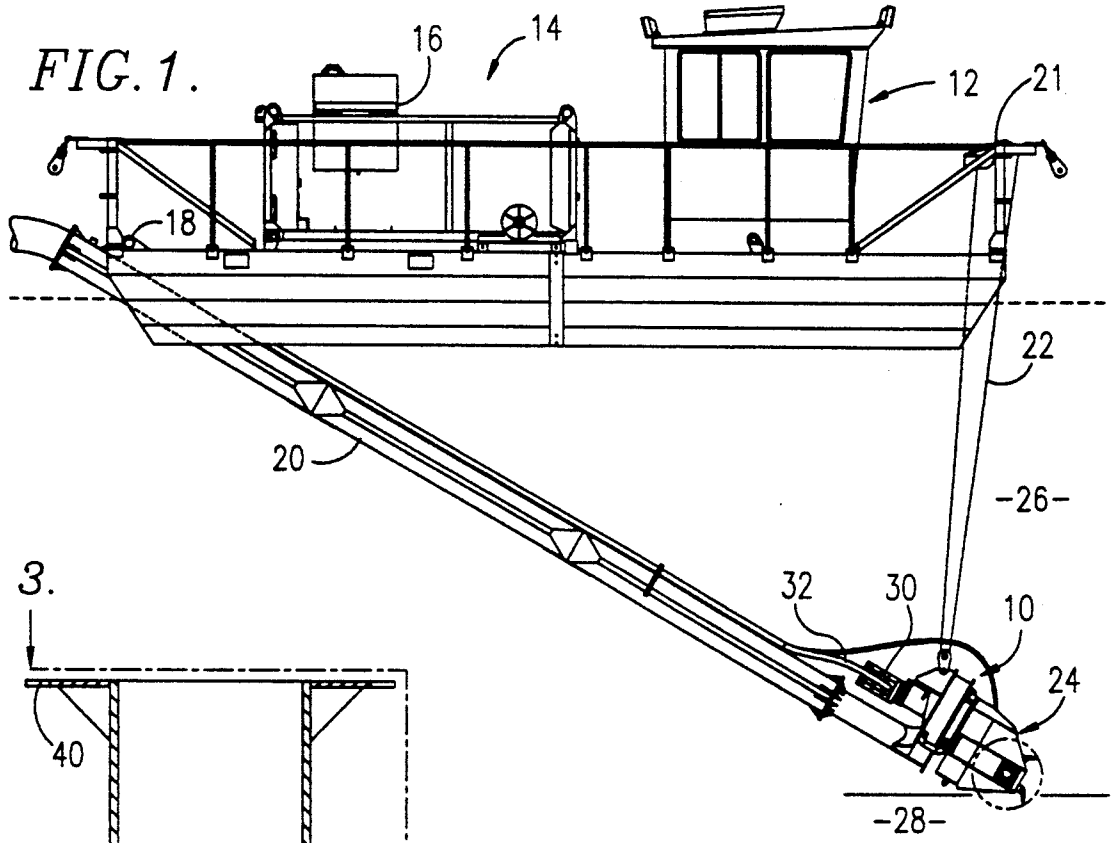
16
14
12
21
18
22
20
26
32
30
10
24
28

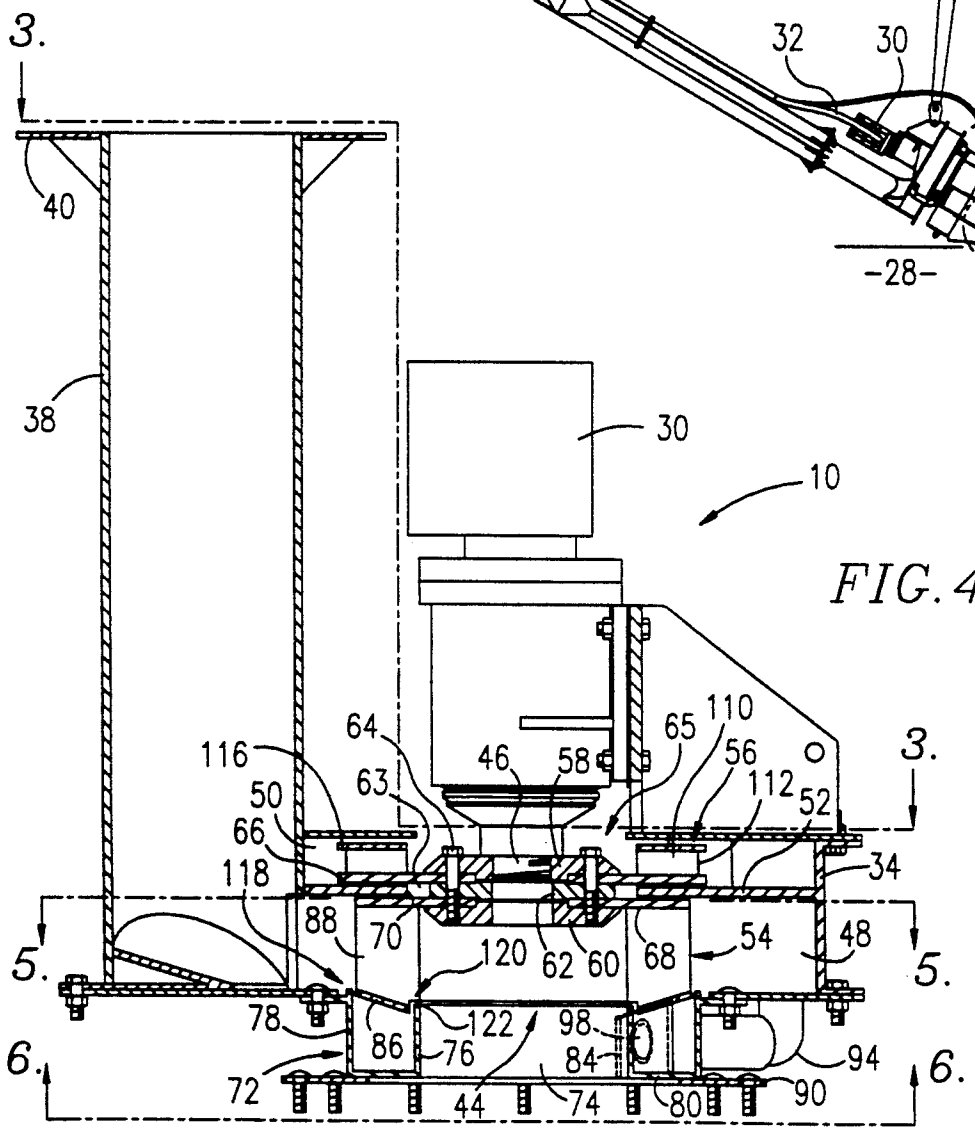
3.
40
38
30
10
64
65
110
116
46
58
56
3.
50
63
112
52
66
118
34
88
70
120
62
60
68
54
48
5.
5.
78
122
98
86
76
84
94
6.
6.
72
44
74
80
90

FIG. 4.

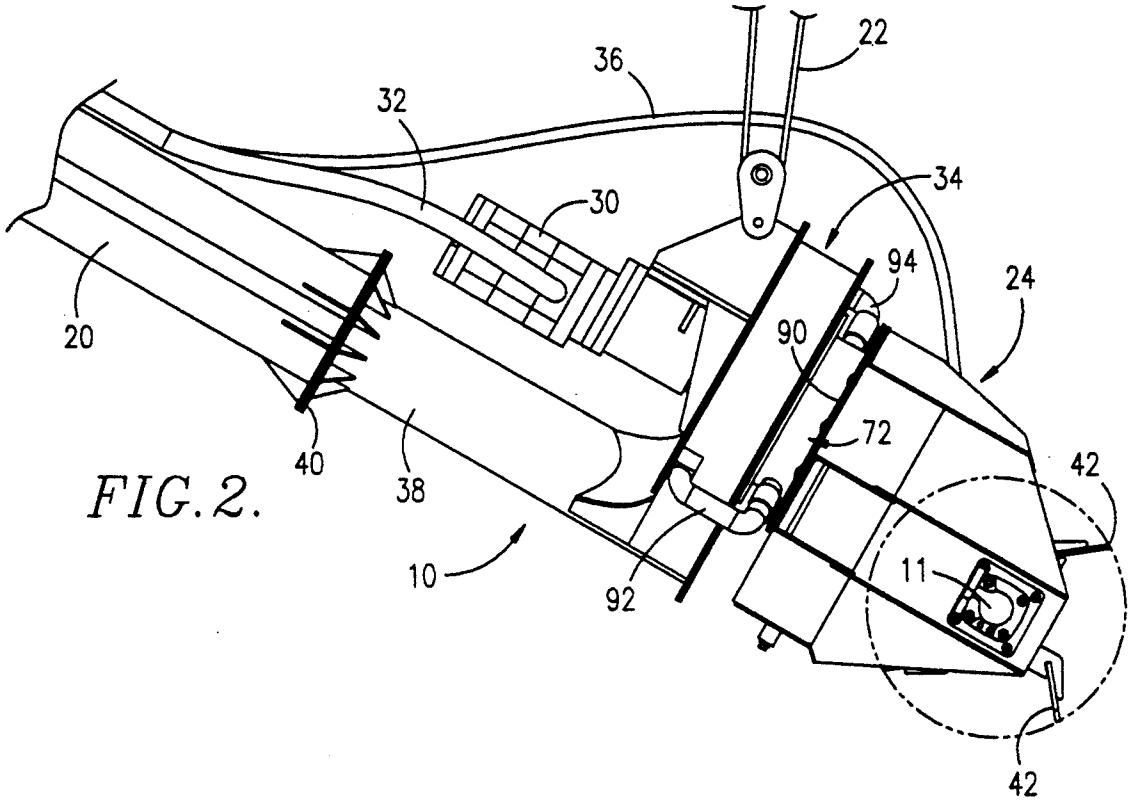
22
36
32
34
30
94
24
20
90
72
42
40
38
11
10
92
42

FIG. 2.

FIG. 6..

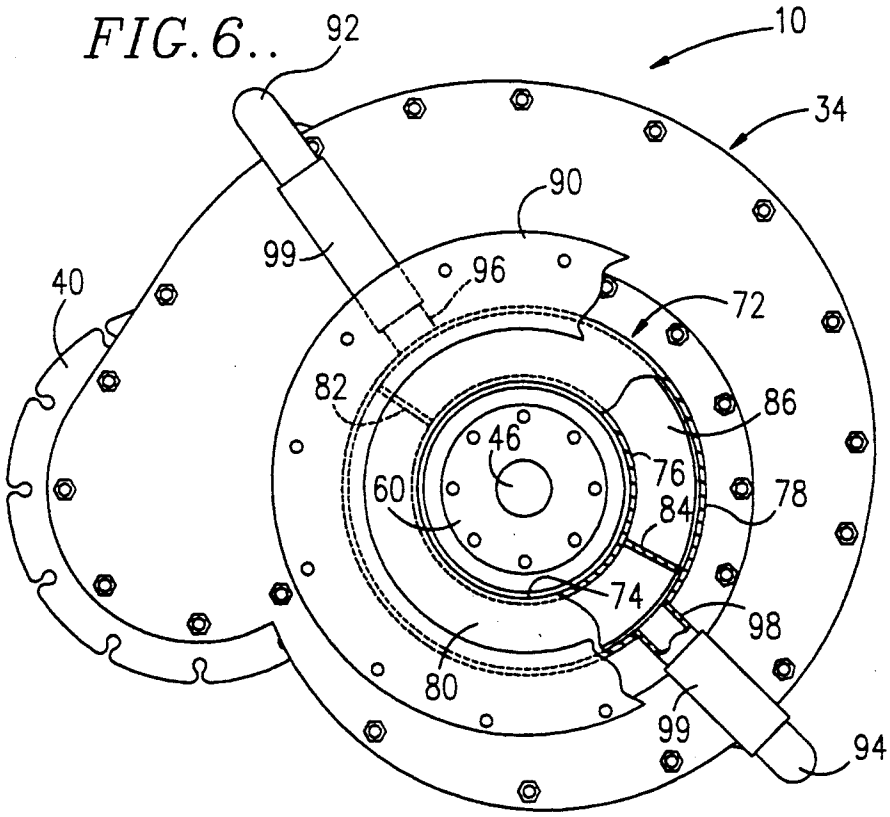
92
10
34
90
99
96
40
72
82
86
46
76
60
78
84
74
98
80
99
94

FIG. 5.

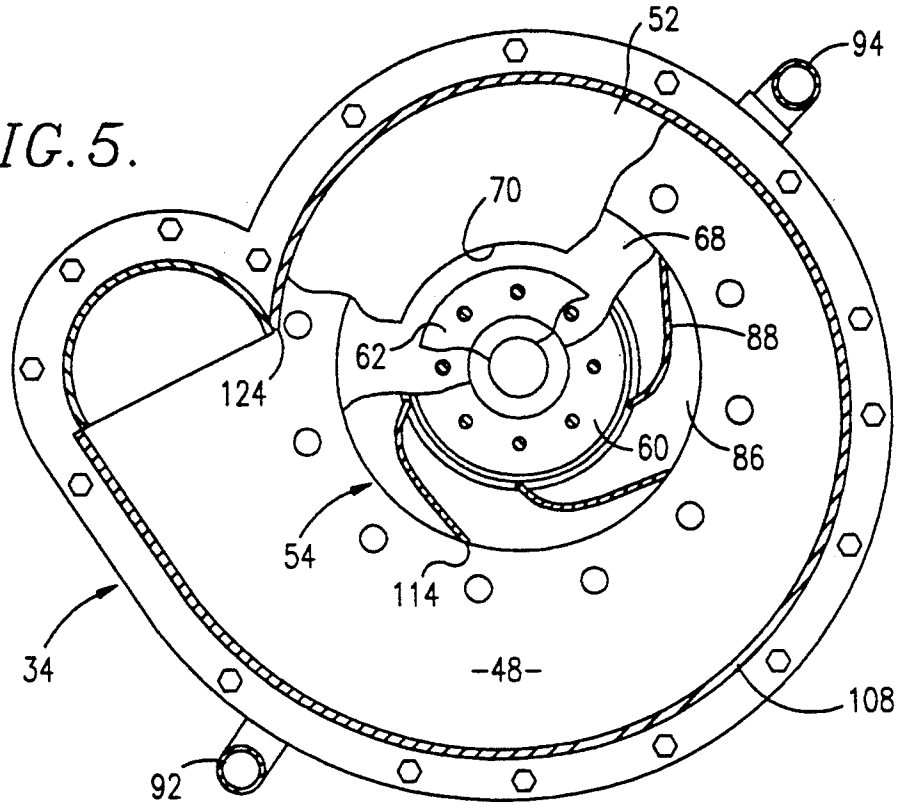
52
94
70
68
88
62
124
60
86
54
114
34
-48-
108
92

FIG. 3.

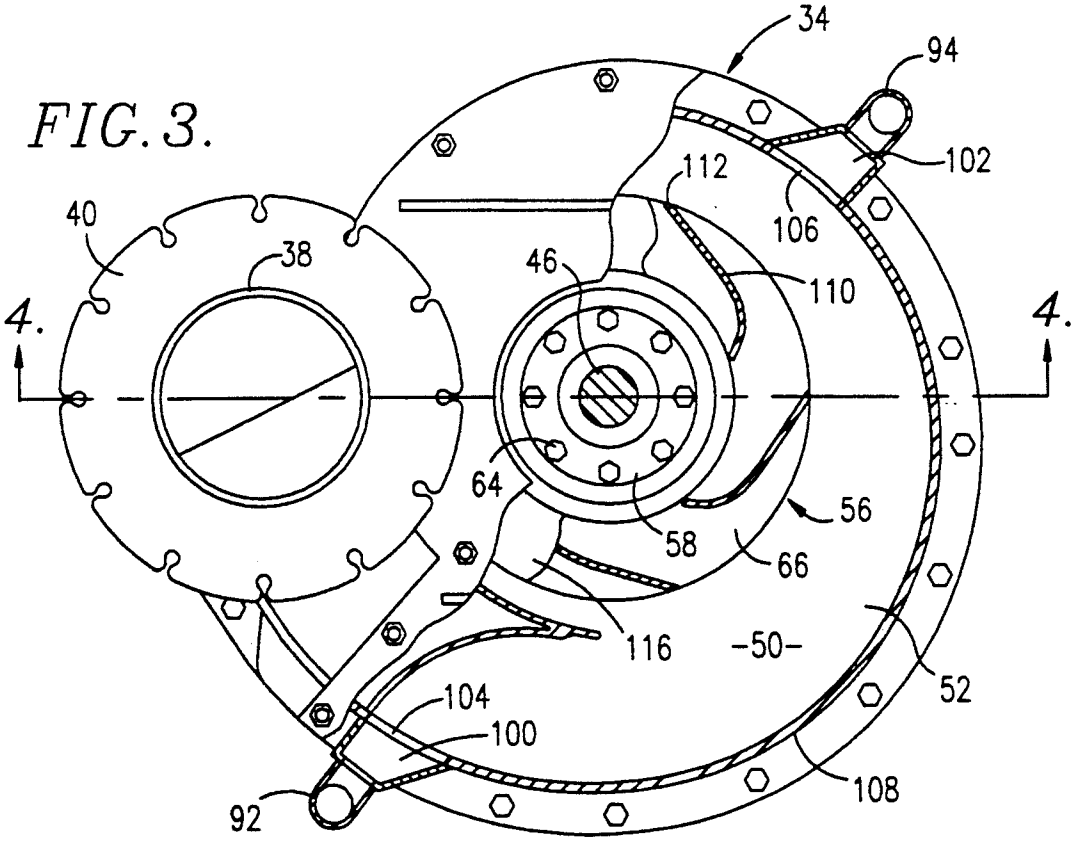
34
94
102
112
106
40
38
46
110
4.
4.
64
56
58
66
116
-50-
52
104
100
108
92

PUMP FOR ABRASIVE MATERIALS

Continuation of application Ser. No. 07/642,795 filed Jan. 18, 1991, abandoned.

BACKGROUND OF THE INVENTION

1. Field of the Invention

This invention concerns a pump which is especially useful for pumping liquids having abrasive materials as a component thereof, and more particularly to a pump which includes two impellers and two intakes, whereby the primary intake receives liquids containing an abrasive material and a secondary intake receives a relatively abrasive-free liquid for circulation to the primary intake to reduce wear on the pump components and help prevent line plugging.

2. Description of the Prior Art

One of the most commonly encountered problems in dredging operations is the wear on the equipment, particularly the pump. At some dredging sites, the sediment or mineral deposit is relatively soft, and thus the abrasive effect of the particulate in the pumped liquid occurs over a greater period of time, while in other environments, such as coral sand, the abrasive effect renders the pump inoperative in only a few hours. Each time the pump must be shut down and repaired or replaced is lost time to the operator and lost income, and lost dredging time once in position represents one of the greatest sources of lost income to operators.

Another problem encountered by pump operators involves choking of the pump by excessive quantities of pumped material accumulating in the pump or in the discharge conduit. The pumps ordinarily employed in dredging operations are submersible and operate in the immediate vicinity of the sand or other material deposit. The material is conventionally pumped to a floating platform and then off to a disposal site. It is to understood that the greater the ratio of sand or other deposit in the discharge flow, the more efficient and thus more profitable the operation. Unfortunately, the pump may be unable to maintain a positive flow if the intake is momentarily blocked when solids have accumulated in the discharge conduit. The weight of the choked discharge conduit may not only cause a shutdown of the dredging operation, but may necessitate abandonment of the discharge conduit.

The approach of pump manufacturers toward the problems of wear due to abrasion have largely focused on building bigger and thus heavier and more expensive pumps. By reinforcing the pump with a greater quantity of material, a longer useful life may be achieved provided that the operator is willing to pay a greater initial cost and for increased horsepower costs to run the heavier equipment. Another approach has been the use of jet pumps which require a great deal of energy to operate. A third solution has been to employ abrasion resistant liners which are subject to the same abrasion as unlined pumps. A fourth approach is exemplified by U.S. Pat. No. 4,872,809 to Addie et al. wherein the specific dimensions of various parts of the pump are controlled.

Each of these different approaches has achieved an increase in the operating life expected of a pump used in pumping abrasive slurries of sand and the like by recognizing that wear will occur and compensating for the abrasive contact between the abrasive material and the pump components. However, there remains a need for a wear resistant pump which remains highly efficient and achieves an even longer life by protecting the components from the abrasive effects of the pumped material rather than treating the symptoms. There also remains a need for a pump which can maintain a flow in a dredging system even when the intake becomes temporarily choked. These objects include maintaining an efficient output from the pump and the ability to use the pump with existing dredging equipment.

SUMMARY OF THE INVENTION

The challenge of solving these problems has largely been met by the pump of the present invention. The pump hereof includes a rotatable shaft mounting two impeller, each having their own intake positioned on different sides of the pump for respectively receiving a primary intake of liquid having a relatively high concentration of abrasive material and a secondary intake of relatively abrasive-free material, thus providing for a sustained flow through the pump and pipeline in the event the primary intake is obstructed. The flow from of the relatively abrasive-free liquid from the secondary intake is preferably channelled to a portion of the housing adjacent the primary intake to isolate the housing and primary impeller from excessive wear.

In greater detail, the primary impeller is configured for high volume flow, while the secondary impeller is designed for a smaller volume of flow at a higher pressure. The higher pressure ensures positive flow of relatively abrasive free liquid to areas of the pump ordinarily subject to contact with an abrasive-laden liquid or slurry during use. The housing of the pump is configured to present two separate chambers. A part of the flow of this relatively abrasive-free liquid is diverted to flow through the pump and around the impellers to further prevent excessive wear. Both the relatively abrasive-free and abrasive-laden flows are combined to flow through a common discharge outlet. Thus, even though the primary intake becomes blocked, flow through the pump and pipeline will be maintained and the pipeline is thus highly resistant to choking.

The invention hereof also includes a method of dredging abrasive materials which includes submersing a pump into a liquid in proximity to a deposit of abrasive laden material, receiving a first flow of abrasive laden material into a primary inlet of the pump, receiving a second flow of relatively abrasive-free liquid into a secondary inlet of the pump, circulating a portion of the relatively abrasive-free flow toward the primary inlet and combining both of the flows for producing a combined discharge. The method also preferably includes directing a part of the relatively abrasive-free flow through the housing of the pump for reducing wear on the pump during operation. The method also preferably includes rotating a cutterhead in proximity to the deposit for disrupting the deposit and thereby routing a portion of the disrupted deposit into the primary inlet for pumping.

BRIEF DESCRIPTION OF THE DRAWINGS

FIG. 1 is a right side elevation of a floating dredge showing the pump of the present invention immersed in a liquid and connected to a discharge conduit for pumping a slurry of liquid and abrasive material;

FIG. 2 is an enlarged, fragmentary right side elevational view of the pump as shown in FIG. 1, with the present invention showing a hydraulic motor for pow-

ering the pump and a rotatable cutterhead positioned adjacent the primary pump inlet;

FIG. 3 is an enlarged top plan view of the pump hereof with portions of the housing broken away for clarity, and portions of the housing, shaft and secondary impeller of the pump shown in section;

FIG. 4 is an enlarged vertical cross-sectional view taken along line 3—3 of FIG. 3 showing the primary and secondary impellers and the purge ring surrounding the primary inlet;

FIG. 5 is an enlarged horizontal cross-sectional view taken along line 5—5 of FIG. 4 with fragmentary portions of the housing also shown, illustrating the bottom of the housing and the primary impeller; and

FIG. 6 is a bottom plan view of the pump hereof with portions of the channel from the upper chamber of the housing and portions of the purge ring adjacent the primary inlet shown in phantom and portions of the bottom cover removed to show a barrier across the annular opening in the purge ring.

DESCRIPTION OF THE PREFERRED EMBODIMENT

Referring now to the drawing, a pump **10** for handling abrasive materials is especially adapted for use with a floating platform **12** for conducting dredging operations from the water surface. Thus, a dredging system **14** employing the pump **10** includes floating platform **12** carrying a power supply such as diesel engine **16** and having a support **18** for discharge conduit **20** and a winch **21** and cable **22** for adjusting the depth of the pump **10**. The engine **16** provides power for the hydraulically energized pump **10** and cutterhead **24** mounted next to the primary intake of the pump **10**. The pump **10** is designed to be submersed in water **26** proximate a deposit of sand or other abrasive material **28**.

The pump **10** hereof is shown in greater detail in FIG. 2. The pump **10** includes hydraulic motor **30** connected to a hydraulic drive associated with diesel engine **16** by hydraulic fluid conduit **32**, and cutterhead **24** also includes a hydraulic motor **11** connected to a hydraulic drive associated with diesel engine **16** by a hydraulic fluid conduit **36**. The pump **10** includes an outlet **38** which is provided with a flange **40** for connecting to discharge conduit **20**.

Cutterhead **24** is provided with a plurality of rotatable blades **42** for engaging a deposit of sand, rock, muck or other abrasive material **28** to be dredged. The cutterhead **24** is positioned adjacent the primary inlet **44** of the pump **10** so that the abrasive material **28** may be drawn into the pump **10** without excessive clouding of the water **26**. As shown in FIG. 2, the blades **42** of the cutterhead **24** are rotatable about a horizontal axis in a clockwise or counter-clockwise direction as shown therein, which serves to maintain an acceptable concentration of abrasive material entering the primary inlet.

Pump **10** also includes a housing **34** for enclosing the working components of the pump **10**. As shown in FIG. 3, the housing is substantially volute in shape and houses a shaft **46**. Referring now to FIG. 4, the housing **34** defines a first chamber **48** and a second chamber **50** separated by a dividing member **52** which is oriented in a plane substantially transverse to the axis of rotation of the shaft **46**. The shaft **46** is connected to a primary, high-volume impeller **54** and a secondary, high-pressure impeller **56** by hub sections **58** and **60** and separated by spacer ring **62**. Hub section **60** is provided with a series of evenly spaced internally threaded holes for receiving carriage bolts **64**, thereby securing the hub sections, spacer ring and impellers together for simultaneous rotation with shaft **46**. Housing **34** presents a primary inlet **44** is located on the normally lower side of housing **34** next to primary impeller **54**, and a secondary inlet **65** adjacent secondary impeller **56** located on the opposite, normally upper side of the housing **34**.

The housing **34**, primary impeller **54**, secondary impeller **56**, and spacer ring **62** define a flowpath **63** for enabling liquid, and specifically relatively abrasive-free water; to flow from second chamber **50** into first chamber **48**. As may be seen in FIG. 4, the annular baseplate **66** of secondary impeller **56** is spaced from dividing member **52**, and the annular baseplate **68** of the primary impeller **54** is located on the opposite side of the dividing member **52** and similarly spaced therefrom. The spacer ring **62** presents a smaller outer diameter than the inner margin **70** of dividing member **52** thus enabling relatively abrasive-free water to flow from second chamber **50** into first chamber **48**.

A purge ring **72** is located adjacent primary inlet **44** and presents a generally annular opening **74** therein. The annular opening **74** is defined by inner wall **76**, outer wall **78** and bottom wall **80**. In addition, the annular opening **74** is interrupted by barriers **82** and **84** to prevent the liquid therein from swirling into a cyclonic flow initiated by the primary impeller **54**. The primary impeller **54** includes a front ring **86** opposite baseplate **68** which together support the primary impeller blades **88** therebetween. The purge ring **72** surrounds the primary inlet **44** and a face plate **90** is located forwardly and thus normally below the purge ring **72** for mounting cutterhead **24** thereon.

Purge ring **72** is fluidically connected to second chamber **50** by a pair of diametrically opposed channels **92**, **94**. The channels **92**, **94** fluidically connect second chamber **50** with annular opening **74** of purge ring **72**. The channels **92**, **94** are located to a input a part of the flow generated by secondary impeller **56** adjacent barriers **82** and **84** respectively in a substantially radially inward direction. Ports **96**, **98** are connected to channels **92** and **94** respectively by hoses **99** and are positioned so that they are angularly ahead of the direction of rotation of the adjacent primary impeller **54**. That is to say, if primary impeller **54** is rotating in a counterclockwise direction as shown in FIG. 6, the ports **96**, **98** will be immediately clockwise of the respective adjacent barriers **82**, **84**.

Channels **92**, **94** receive a portion of the water flow from second chamber **50** as shown in FIG. 5. Receptacles **100**, **102** receive a flow of relatively abrasive-free water generated by secondary impeller **56** through holes **104**, **106** in the housing **34**. The shell **108** of the housing **34** is bolted together and generally volute in shape, and holes **104**, **106** are the only openings in the shell **108** in fluid communication with second chamber **50** through which water or other liquid received from secondary inlet **65** may flow other than through flowpath **63**. The secondary impeller blades **110** have outer margins **112** which extend a greater radial distance from the axis of rotation of shaft **46** than the outer margins **114** of primary impeller blades **88** as may be appreciated from a comparison of FIGS. 3 and 5. Secondary impeller **56** is also provided with an annular ring **116** whereby impeller blades **110** are located between the annular ring **116** and baseplate **66**.

The components of pump **10**, with the exception of hoses **99**, are preferably constructed of steel. However,

cast iron construction, hardened, or lined materials are suitable alternative materials for construction. The steel components may be cast or individually fabricated. The components are painted prior to use to minimize the effects of corrosion to such elements as salt water.

In operation, the pump **10** hereof is lowered by winch **21** and cable **22** into position where it is immersed in a body of liquid such as water **26** and presenting cutterhead **24** and primary inlet **44** in proximity to a deposit of abrasive material **28** such as rock, sand, muck, or any other material. The abrasive material **28** is conventionally encountered as a deposit which is in the form of sediment or a rock formation. The pump **10** and cutterhead **24** are energized by the flow of hydraulic fluid through conduits **32** and **36**, which in turn causes shaft **46** to rotate and drive primary impeller **54** and secondary impeller **56**.

As the cutterhead blades **42** begin to rotate in a clockwise direction (viewed in FIG. 2), the deposit of abrasive material **28** is loosened and portions are brought near primary inlet **44**. The rotation of the primary impeller **54** creates a suction drawing both water **26** and abrasive material **28** in through the primary inlet **44**.

The secondary impeller **56** rotates simultaneously with the primary impeller **54** and draws relatively abrasive-free water **26** through secondary inlet **65**. The abrasive-free water enters secondary chamber **50** and is diverted into two flows. The secondary impeller **56** presents a greater outside diameter than the primary impeller **54**, but is of a narrower width than primary impeller **54**, so that the volume of liquid pumped by the secondary impeller **56** is less, but moves at a higher velocity and has a higher pressure than that pumped by primary impeller **54**. As a result, the water in second chamber **50** is at a higher pressure than the combination of water and abrasive material in first chamber **48** and consequently seeks to move thereto.

A portion of the water in chamber **50** is routed through channels **92** and **94** into purge ring **72**. There, it is introduced into annular opening **74** for movement in a direction which is radically inward and upward to pass in the spaces **118** and **120** between the front ring **86** and the outer wall **78** and inner wall **76** respectively. This portion of the flow which passes through ports **96** and **98** thus serves to isolate the primary impeller **54** and the top margin **122** of the purge ring **72** from wear due to the intake of abrasive material through primary inlet **44**. The radially inward orientation of the ports **96** and **98** and the barriers **82** and **84** resist the tendency of the primary impeller **54** to cause a cyclonic flow of water in the annular opening **74** and instead provide for the preferred radial flow of the water toward spaces **118** and **120**.

A second part of the water in chamber **50** moves behind baseplate **66** of the secondary impeller **56** and through flowpath **63** to further isolate the primary impeller **54** from wear due to contact with abrasive material **28**. This second part is especially effective in limiting any wear between the primary impeller **54** and the housing **34**. The water moving through flowpath **63** and through channels **92** and **94** combines with the mixture of abrasive material and water entering primary inlet **44**. The resulting slurry is a combination of the flows and moves through first chamber **48** and through outlet **38** to discharge conduit **20** for removal to a remote site.

It may be appreciated that while the primary inlet **44** will be exposed to a high concentration of abrasive material **28**, the secondary inlet **65** is positioned on the opposite side of the housing **34** so that the water received therein is relatively abrasive-free. Should high turbity be encountered near the pump or cutterhead, the secondary inlet **65** may be cowled as much as 10 to 20 feet away so that the intake of water therein is free of abrasive material. The cutterhead **24** is located immediately adjacent the primary inlet **44** so that the abrasive deposits dislodged thereby are quickly sucked into the pump **10** through the primary inlet **44**. Very little clouding of the surrounding water is caused by the pump **10** and the method of dredging described herein.

Yet further, in the event that the primary inlet **44** becomes temporarily covered due to engagement with an abrasive deposit or is covered by trash of some sort such as a plastic sheet, the pump **10** hereof does not choke because the secondary inlet **65** is oriented to continue to receive a supply of water **26** to maintain positive flow in the pump. Water received into the secondary inlet **65** is routed through the pump for discharge through a common outlet **38**, and thus there is no loss of liquid. Choking also often occurs due to inadequate flow adjacent and downstream of the tongue of the pump, and again the secondary impeller **56** serves to maintain a positive flow of fluid even when the area adjacent the tongue **124** of the first chamber **48** becomes choked.

We claim:

1. A pump for abrasive materials comprising:

a rotatable shaft defining an axis of rotation;

a first impeller operably connected to said shaft for generating a primary flow of liquid;

a second impeller operably connected to said shaft for generating a secondary flow of liquid;

a housing adapted to rotatably receive said first impeller and said second impeller therein, said housing defining a first chamber for receiving said first impeller and presenting a primary inlet for receiving a liquid including abrasive materials, a second chamber for receiving said second impeller and presenting a secondary inlet located remotely on said housing from said first inlet for receiving a liquid relatively free of abrasive materials,

said housing having an outlet remote from said primary inlet and said secondary inlet; and

a first channel for diverting a part of the secondary flow of liquid from the second chamber to an area of the housing immediately adjacent the primary inlet.

2. A pump for abrasive materials as set forth in claim **1**, said first channel being exterior to said housing.

3. A pump for abrasive materials as set forth in claim **2**, including a purge ring presenting an annular opening in fluidic communication with said first channel and mounted adjacent the primary inlet for directing a flow of the relatively abrasive-free liquid toward said first impeller.

4. A pump for abrasive materials as set forth in claim **3**, wherein said impeller includes a front edge, said annular opening being oriented for directing a flow of the relatively abrasive-free liquid toward said front edge.

5. A pump for abrasive materials as set forth in claim **4**, including a second channel in fluidic communication with the annular opening of the purge ring, said second channel fluidically interconnecting said second chamber and the purge ring in opposite orientation to said first channel.

6. A pump for abrasive materials as set forth in claim **5**, wherein said first and second channels are oriented

for directing a flow of relatively abrasive-free liquid radially inwardly into the annular opening.

7. A pump for abrasive materials as set forth in claim **6** wherein said purge ring includes a least one barrier positioned across said annular opening to resist induced swirling of the fluid introduced therein.

8. A pump for abrasive materials as set forth in claim **1**, said housing including a member dividing said housing into said first and second chambers, said member being oriented substantially perpendicular to the axis of rotation of said shaft.

9. A pump for abrasive materials as set forth in claim **8**, said member lying between said first impeller and said second impeller and defining a flowpath for a part of the flow of the relatively abrasive-free material between said first impeller and said member and said second impeller and said member.

10. A pump for abrasive materials as set forth in claim **9**, including a spacing ring positioned between said first and said second impeller, said spacing ring being substantially co-planar with said member, said flowpath including an annular space between the member and the spacing ring for the movement of the relatively abrasive-free liquid therethrough.

11. A submersible pump for abrasive materials comprising:

a rotatable shaft defining an axis of rotation;

a first impeller operably connected to said shaft for generating a primary flow of liquid and presenting a central region and a first outer periphery;

a second impeller operably connected to said shaft for generating a secondary flow of liquid, said second impeller having a diameter greater than and a depth smaller than said first impeller, said second impeller presenting a central region and a second outer periphery;

a housing rotatably receiving said first impeller and said second impeller therein, said housing defining a first chamber for receiving said first impeller and presenting a primary inlet adjacent and in communication with the central region of said first impeller for receiving a liquid including abrasive materials from ambient liquid in which the pump is immersed, and a second chamber for receiving said second impeller and presenting a secondary inlet located remotely on said housing and adjacent and in communication with the central region of said second impeller for receiving a liquid relatively free of abrasive materials from the ambient liquid in which said pump is immersed, said primary and secondary inlets being oriented in generally opposed relationship on opposite sides of said first and second impellers for respectively receiving said abrasive-including liquid and said relatively abrasive-free liquid directly from the ambient liquid;

means defining a passageway for said abrasive-free liquid for directing the latter from said central region of said second impeller radially outwardly and around said second periphery, radially inwardly from said second periphery in proximity to said first impeller, and then radially outwardly again towards said first periphery; and

means defining an outlet remote from said primary inlet and said secondary inlet and in communication with the interior of said housing.

12. A pump for abrasive materials as set forth in claim **11**, including a purge ring presenting an annular opening substantially surrounding said primary inlet for receiving a flow of the relatively abrasive-free liquid and directing said flow of abrasive-free liquid proximate said first impeller.

13. A pump for abrasive materials as set forth in claim **12** wherein said first impeller includes a front edge, said annular opening being oriented for directing a flow of the relatively abrasive-free liquid toward said front edge.

14. A pump for abrasive materials as set forth in claim **13** including first and second channels fluidically connecting said second chamber and said purge ring at relatively opposed positions on said purge ring.

15. A pump for abrasive materials as set forth in claim **14** wherein said first and second channels are oriented for directing a flow of relatively abrasive-free liquid radially inwardly into the annular opening.

16. A pump for abrasive materials as set forth in claim **15** wherein said purge ring includes at least one barrier positioned across said annular opening to resist induced swirling of the fluid introduced therein.

17. A pump for abrasive materials as set forth in claim **11**, there being a fixed wall between said first and second impellers.

18. A method of dredging abrasive materials including the steps of:

immersing a pump having a housing including a primary inlet and a secondary inlet, said housing enclosing a first and second impeller in respective communication with the primary and secondary inlet into a liquid and positioning said pump in proximity to a deposit of abrasive material;

directing a first flow of the liquid including a quantity of the abrasive material into the primary inlet of the pump;

directing a second flow of the liquid which is relatively free of the abrasive material into the secondary inlet of the pump;

circulating a first portion of the second flow from the second impeller toward the first impeller proximate the primary inlet for reducing abrasion on the pump housing proximate the primary inlet during intake of the abrasive material;

circulating a second portion of the second flow from the second impeller through the housing proximate the first impeller and remote from the primary inlet for reducing abrasion on the pump during pumping of the abrasive material; and

combining said first flow and said first portion and said second portion of said second flow in the housing and discharging the combined flow to a location remote from the pump.

19. A method of dredging abrasive materials as set forth in claim **18** including disrupting the deposit of abrasive material prior to directing the first flow into the primary inlet.

20. A method of dredging abrasive materials as set forth in claim **19** wherein said disrupting step includes rotating a cutter head into a deposit of abrasive materials in proximity to the primary inlet.

21. A method of dredging abrasive materials as set forth in claim **19** wherein said primary inlet is located for receiving the first flow relatively proximate the deposit of abrasive materials, and the secondary inlet is located for receiving the second flow remote from the deposit of abrasive materials relative to the primary inlet.

* * * * *