US010299336B2

(12) **United States Patent**
Bowen et al.

(10) **Patent No.: US 10,299,336 B2**
(45) **Date of Patent: May 21, 2019**

(54) **CONFIGURABLE LIGHTING SYSTEM**

(71) Applicant: **Eaton Intelligent Power Limited**, Dublin (IE)

(72) Inventors: **John Edward Bowen**, Sharpsburg, GA (US); **Raymond Janik**, Fayetteville, GA (US)

(73) Assignee: **EATON INTELLIGENT POWER LIMITED**, Dublin (IE)

(*) Notice: Subject to any disclaimer, the term of this patent is extended or adjusted under 35 U.S.C. 154(b) by 0 days.

(21) Appl. No.: **16/014,394**

(22) Filed: **Jun. 21, 2018**

(65) **Prior Publication Data**

US 2018/0310381 A1 Oct. 25, 2018

Related U.S. Application Data

(63) Continuation-in-part of application No. 15/811,062, filed on Nov. 13, 2017, which is a continuation of (Continued)

(51) **Int. Cl.**
H05B 33/08 (2006.01)
F21V 23/00 (2015.01)
(Continued)

(52) **U.S. Cl.**
CPC ***H05B 33/0863*** (2013.01); ***F21S 8/026*** (2013.01); ***F21V 17/12*** (2013.01);
(Continued)

(58) **Field of Classification Search**
CPC H05B 37/02; H05B 33/08; H05B 33/0845; H05B 33/0863; F21K 9/62; F21S 8/026;
(Continued)

(56) **References Cited**

U.S. PATENT DOCUMENTS

6,127,783 A 10/2000 Pashley et al.
6,149,283 A 11/2000 Conway et al.
(Continued)

FOREIGN PATENT DOCUMENTS

CN 201844227 5/2011

OTHER PUBLICATIONS

Test Report of California Appliance Efficiency Compliance for Permanently Installed High Efficacy LEDs under Title 24, issued Nov. 18, 2015.
(Continued)

Primary Examiner — Jimmy T Vu
(74) *Attorney, Agent, or Firm* — King & Spalding LLP

(57) **ABSTRACT**

A luminaire can include a housing having at least one outer surface that forms a cavity. The luminaire can also include at least one electrical component disposed, at least in part, within the cavity. The luminaire can further include an electrical cable having a first end and a second end, where the first end is coupled to the at least one electrical component. The luminaire can also include a switch coupled to the electrical cable, where the switch is disposed remotely from the housing, where the switch has multiple positions, wherein each position of the switch corresponds to a discrete correlated color temperature (CCT) output by one or more light sources of the luminaire.

20 Claims, 18 Drawing Sheets

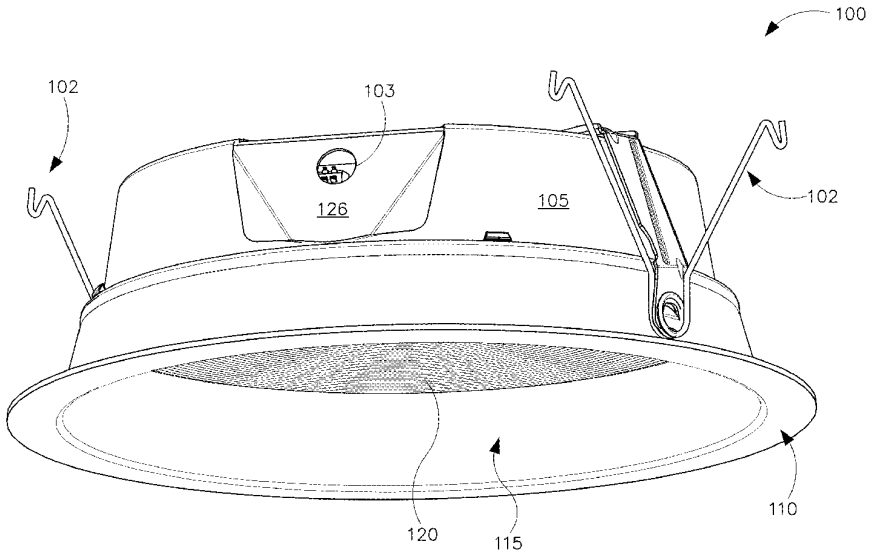

Luminex v. Signify
Luminex Exhibit 1001
Page 001

Related U.S. Application Data

application No. 15/435,141, filed on Feb. 16, 2017, now Pat. No. 9,820,350.

(60) Provisional application No. 62/297,424, filed on Feb. 19, 2016.

(51) **Int. Cl.**

F21V 17/12	(2006.01)
F21V 21/088	(2006.01)
F21S 8/02	(2006.01)
F21V 23/04	(2006.01)
F21Y 115/10	(2016.01)

(52) **U.S. Cl.**

CPC ***F21V 21/088*** (2013.01); ***F21V 23/002*** (2013.01); ***F21V 23/04*** (2013.01); ***H05B 33/0845*** (2013.01); *F21Y 2115/10* (2016.08)

(58) **Field of Classification Search**

CPC F21V 3/02; F21V 5/04; F21V 7/00; F21V 17/12; F21V 21/088; F21V 23/001; F21V 2113/13; F21V 2115/10

USPC ..... 315/151, 185 R, 209 R, 291, 294, 307, 315/308, 312

See application file for complete search history.

(56) **References Cited**

U.S. PATENT DOCUMENTS

7,014,336	B1	3/2006	Ducharme	
7,255,457	B2	8/2007	Ducharme	
7,416,312	B1	8/2008	McDermott	
7,926,300	B2	4/2011	Roberts	
8,172,415	B2	5/2012	Wegh	
8,317,362	B2	11/2012	Ku et al.	
8,598,793	B2 *	12/2013	Yan	H05B 33/0869 315/151
8,872,438	B2	10/2014	Zhou	
8,941,312	B2	1/2015	McRae	
8,947,013	B2	2/2015	Sutardja et al.	
9,072,148	B2	6/2015	Tanaka et al.	
9,144,129	B2	9/2015	Munday et al.	
9,820,350	B2	11/2017	Pyshos	
9,892,693	B1	2/2018	Kumar	
10,091,855	B2	10/2018	Van Winkle	
10,136,503	B2	11/2018	Chen	
2006/0220586	A1	10/2006	Latham	
2008/0060917	A1	3/2008	Chia-Li et al.	
2010/0237798	A1	9/2010	Wolf	
2013/0114241	A1	5/2013	Van De Ven et al.	
2013/0328503	A1	12/2013	Toda	
2014/0210357	A1	7/2014	Yan et al.	
2014/0210376	A1	7/2014	Hicks, IV	
2015/0054410	A1	2/2015	Sanders	
2017/0019973	A1	1/2017	Beck et al.	
2017/0086265	A1	3/2017	Akiyama et al.	

OTHER PUBLICATIONS

Energy Star, Certificate of Compliance; Certificate No. 1129756, dated Nov. 25, 2015.

Test Report of IES LM-79-08; Approved Method: Electrical and Photometric Measurements of Solid-State Lighting Products; issued Nov. 18, 2015.

International Search Report for PCT/US2018/047718, dated Nov. 29, 2018.

* cited by examiner

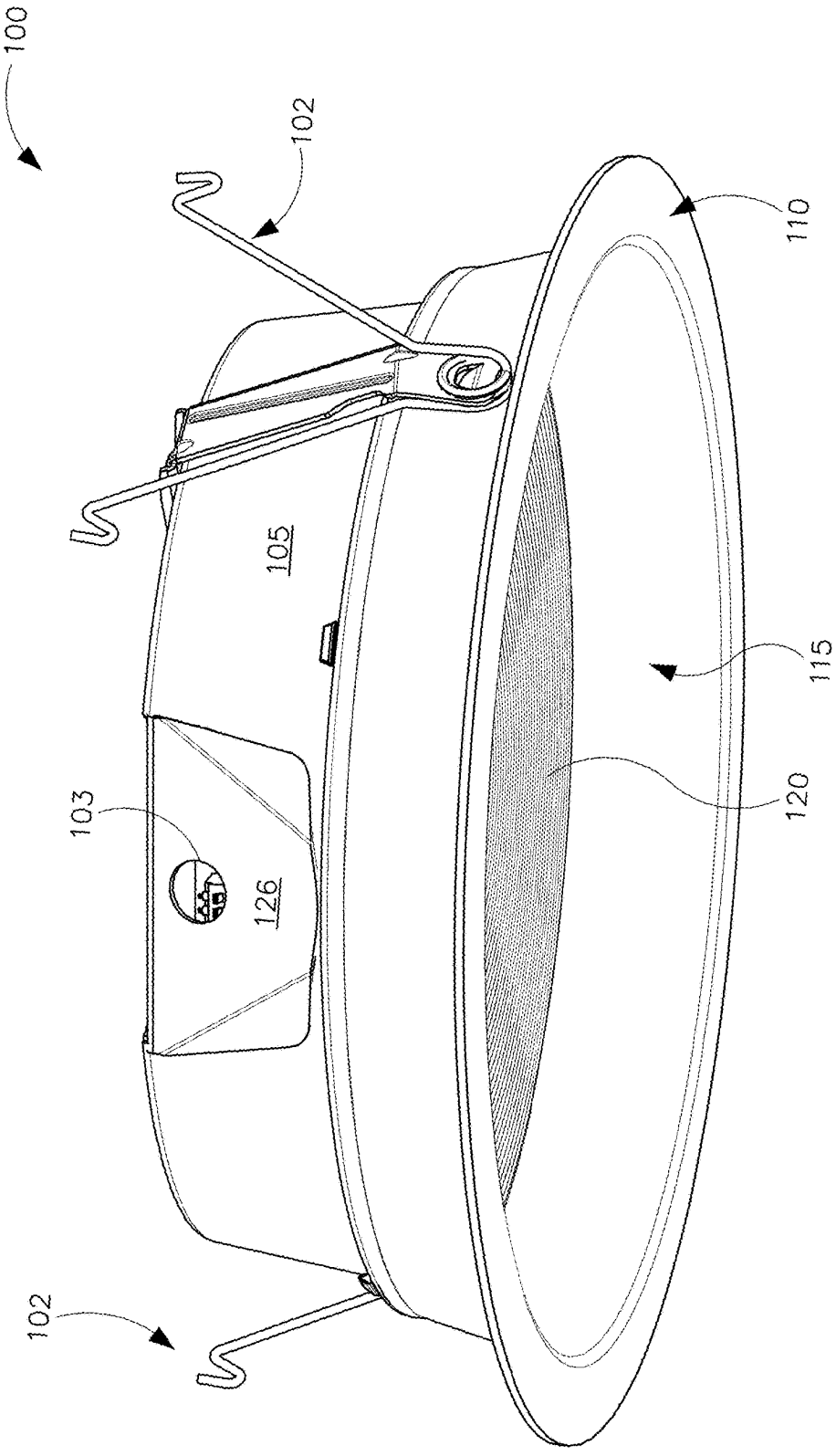

FIG. 1A

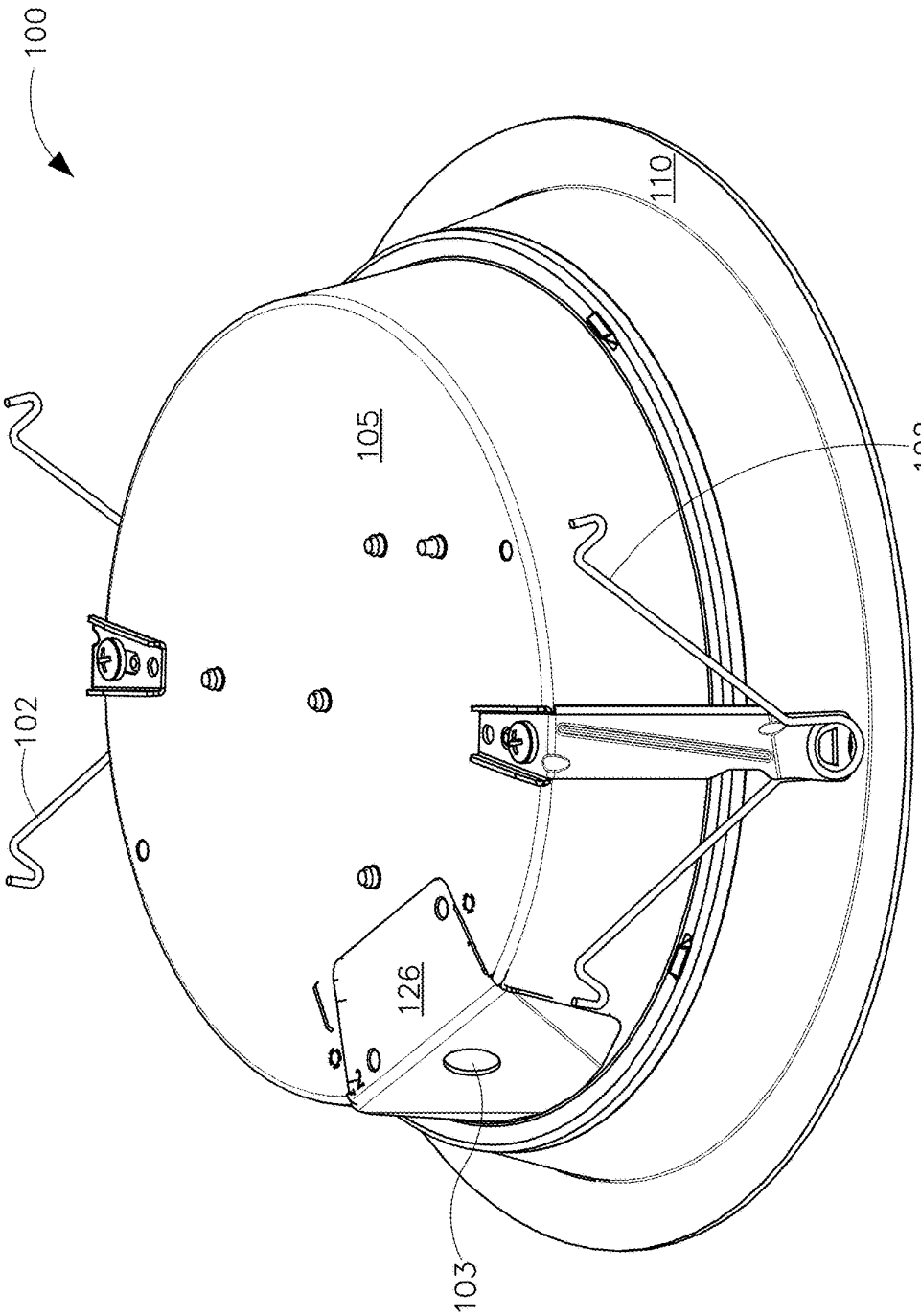

FIG. 1B

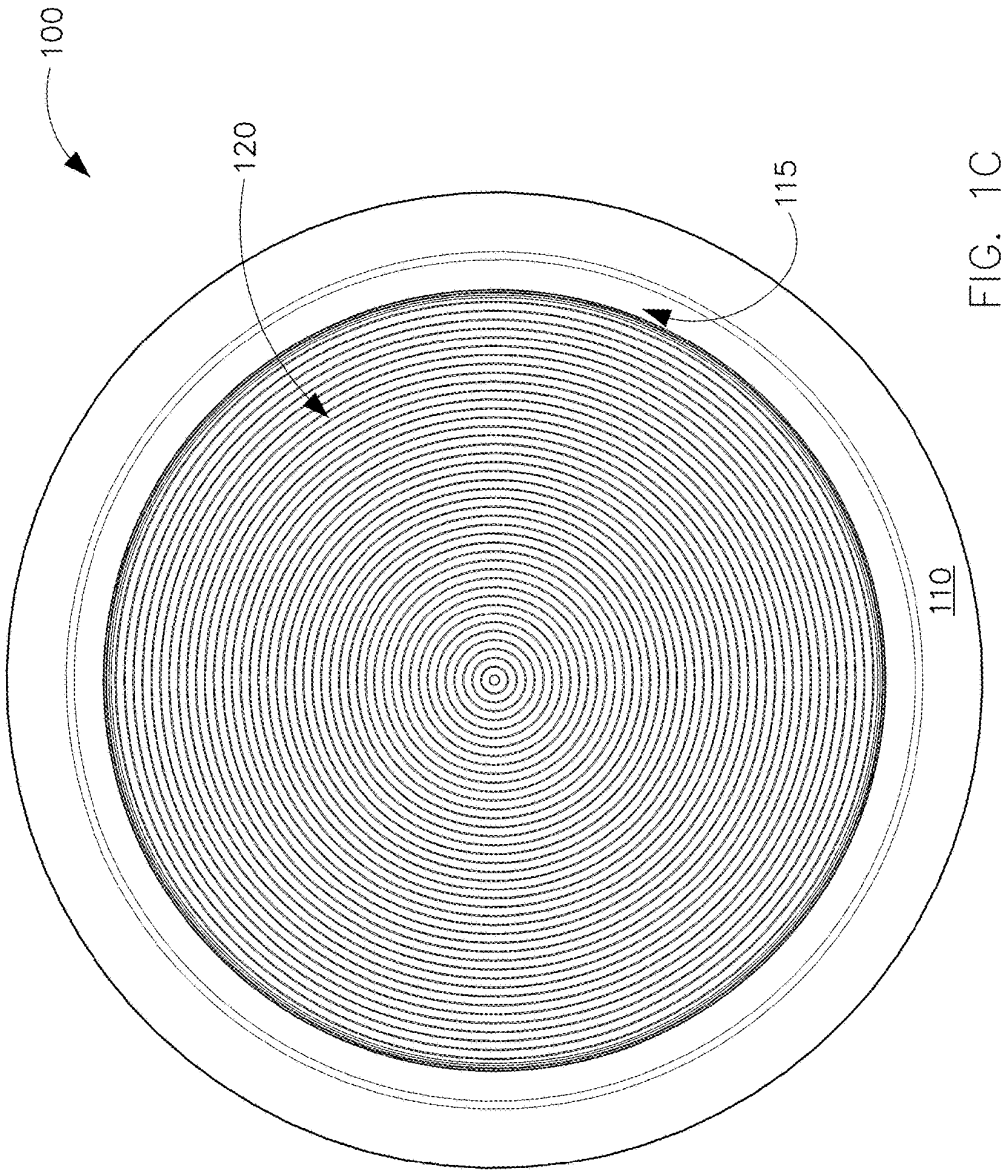

FIG. 1C

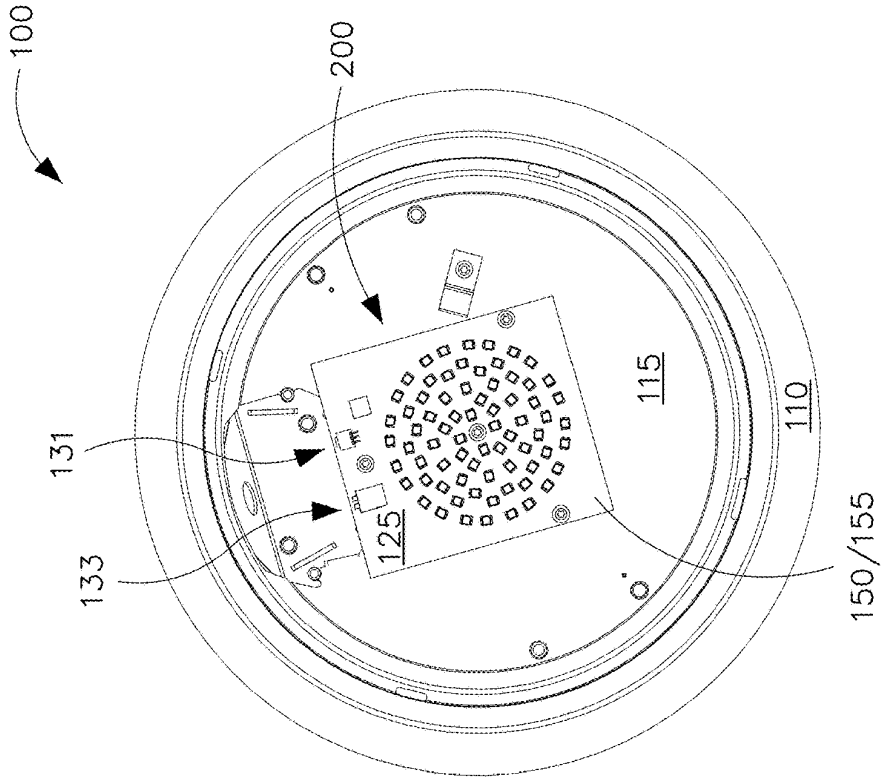

FIG. 1E

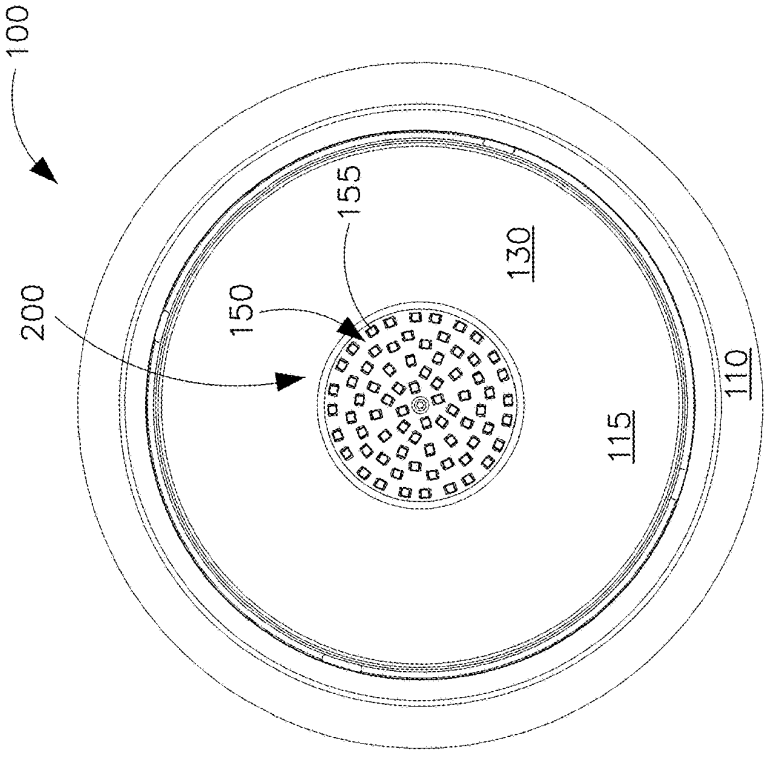

FIG. 1D

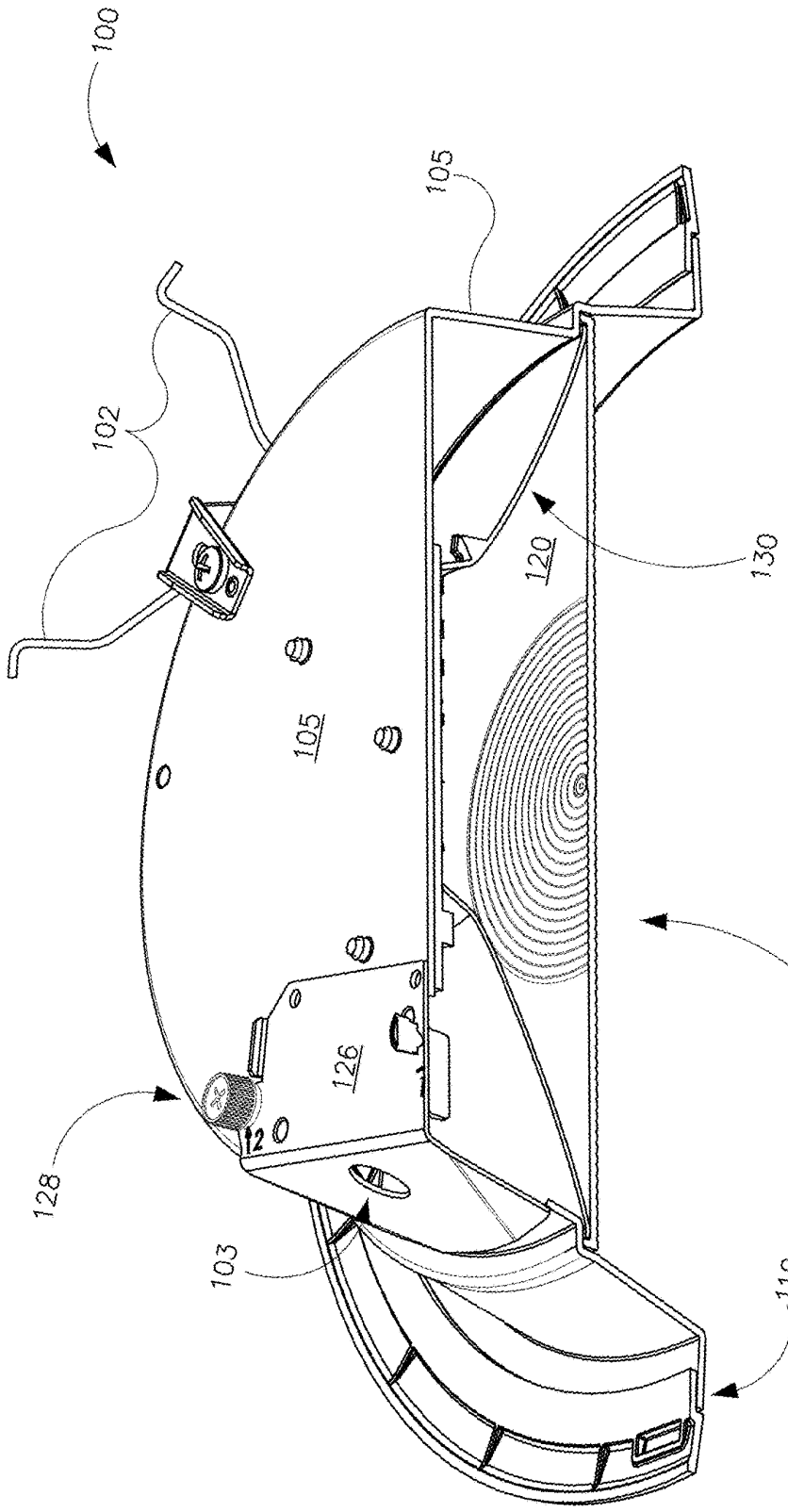

FIG. 1F

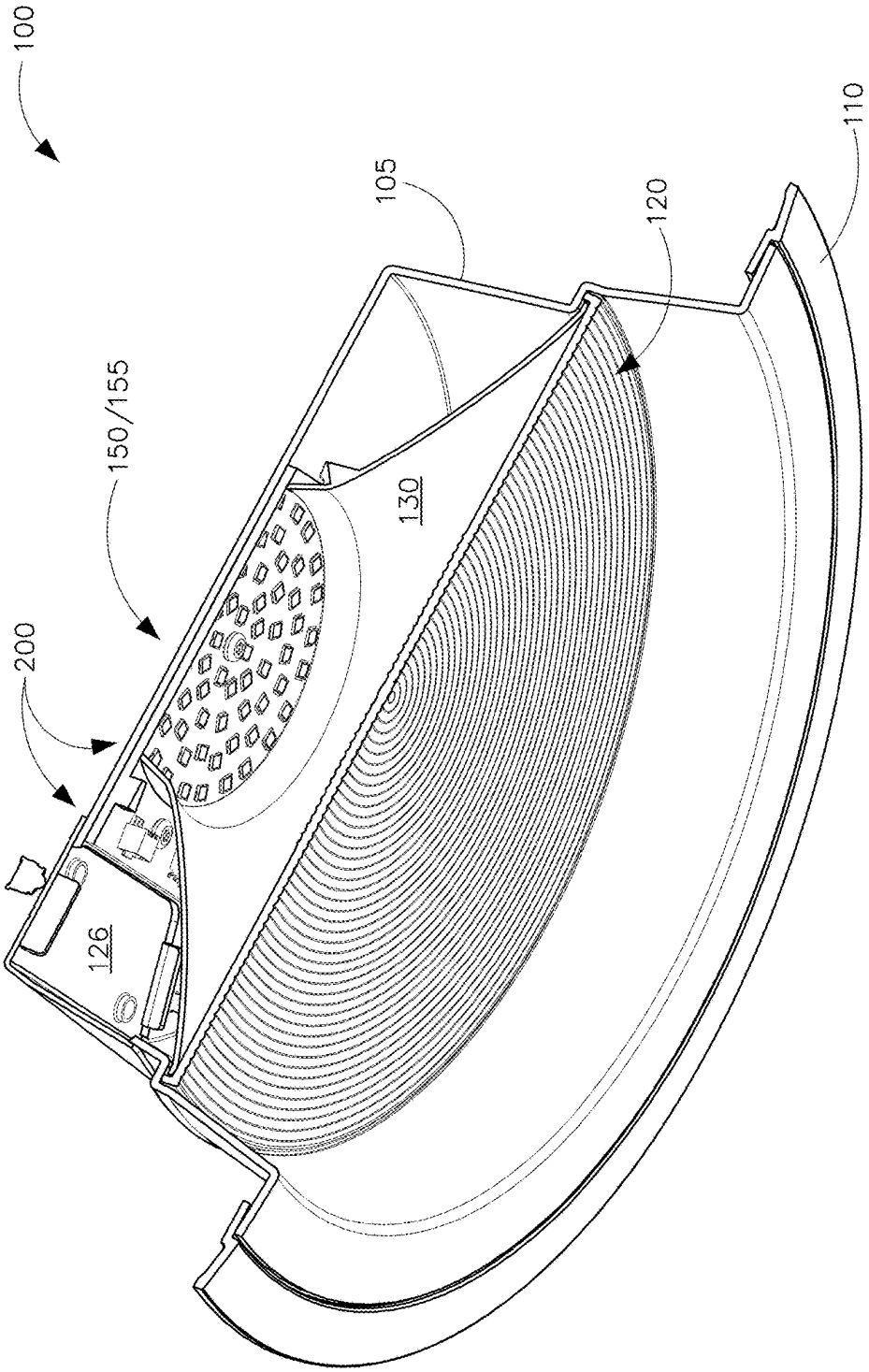

FIG. 1G

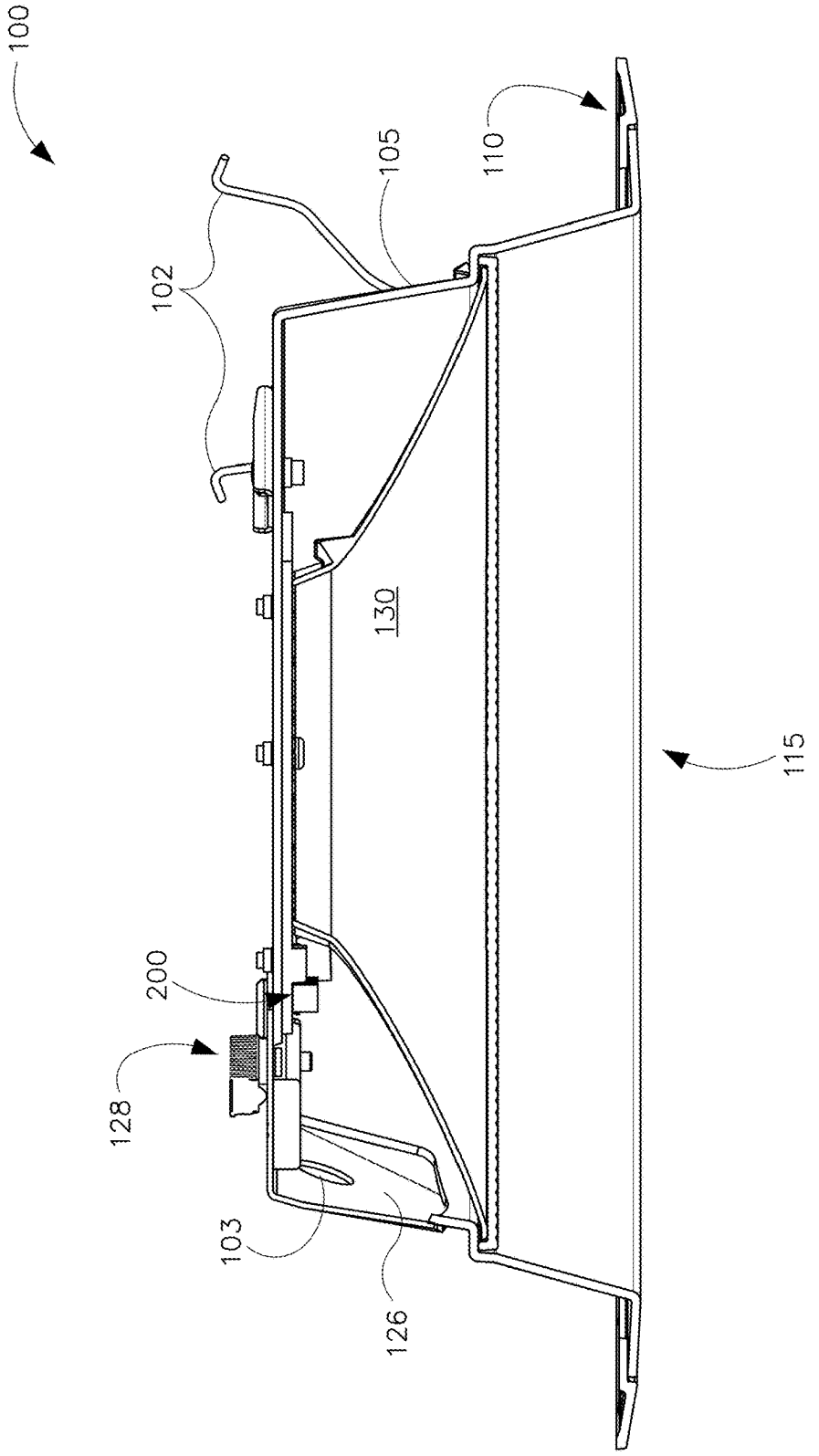

FIG. 1H

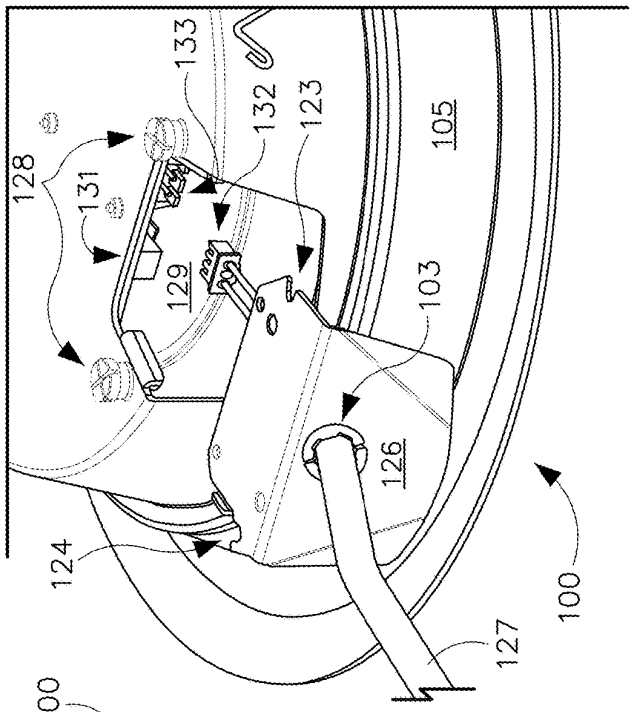

FIG. 1J

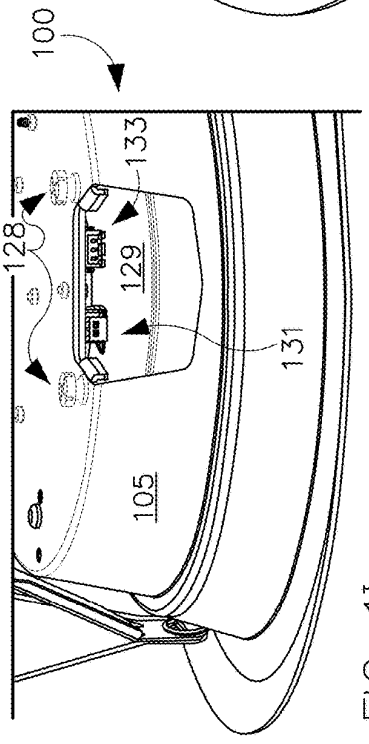

FIG. 1I

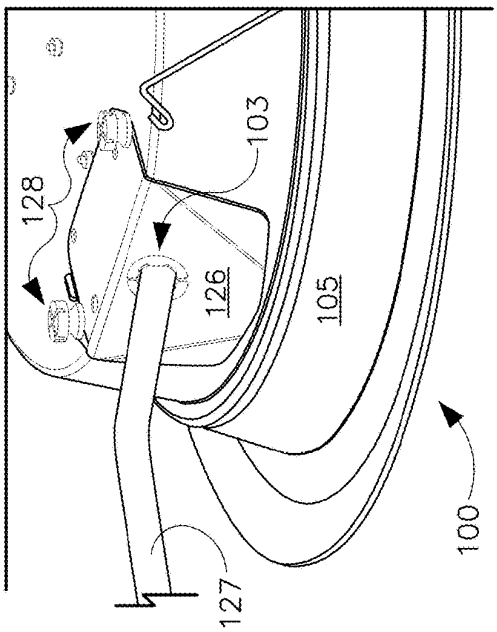

FIG. 1K

FIG. 2

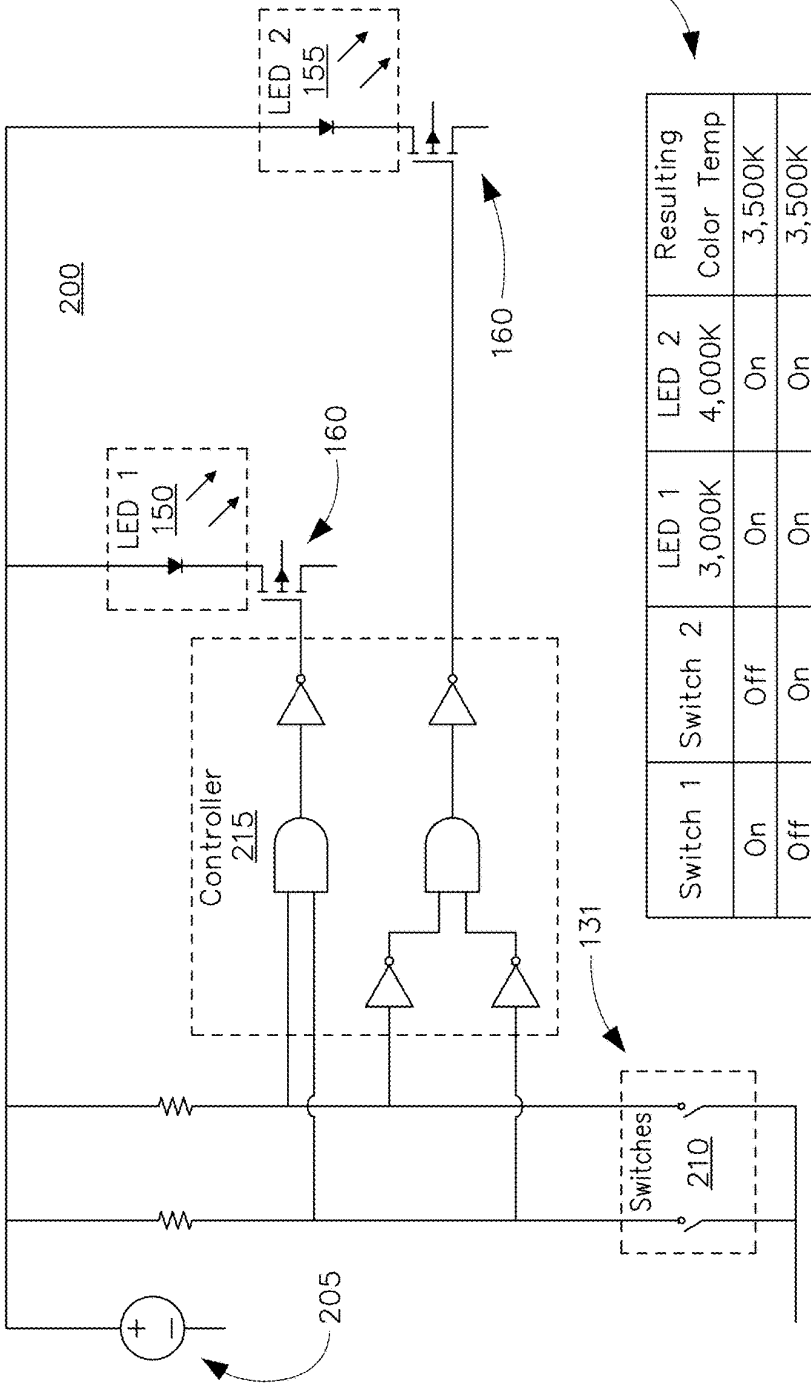

FIG. 3

300

Switch 1	Switch 2	LED 1 3,000K	LED 2 4,000K	Resulting Color Temp
On	Off	On	On	3,500K
Off	On	On	On	3,500K
On	On	On	Off	3,000K
Off	Off	Off	On	4,000K

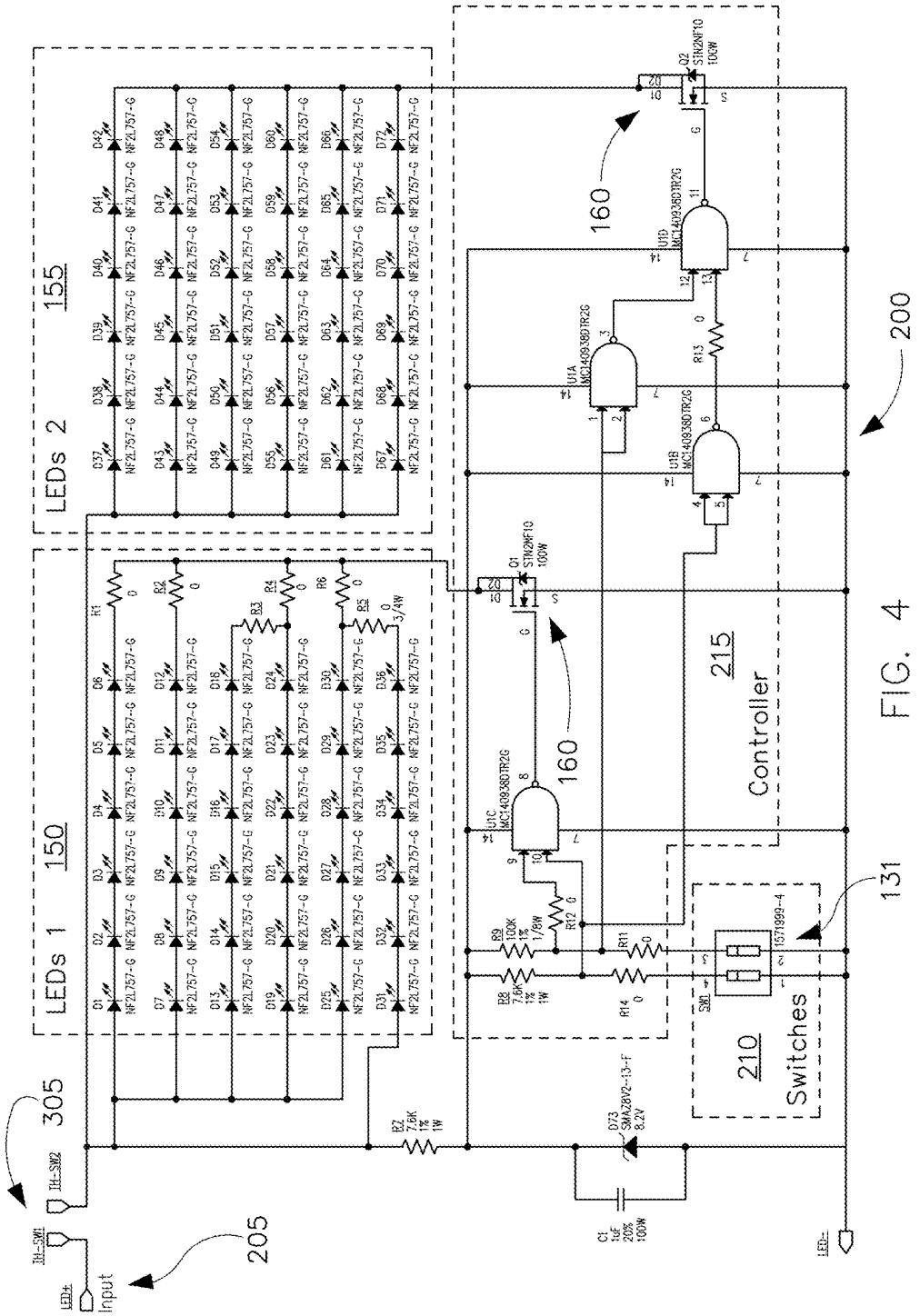
LEDs 1
150
LEDs 2
155
Controller
215
Switches
210
160
160
200
131
305
205
Input

FIG. 4

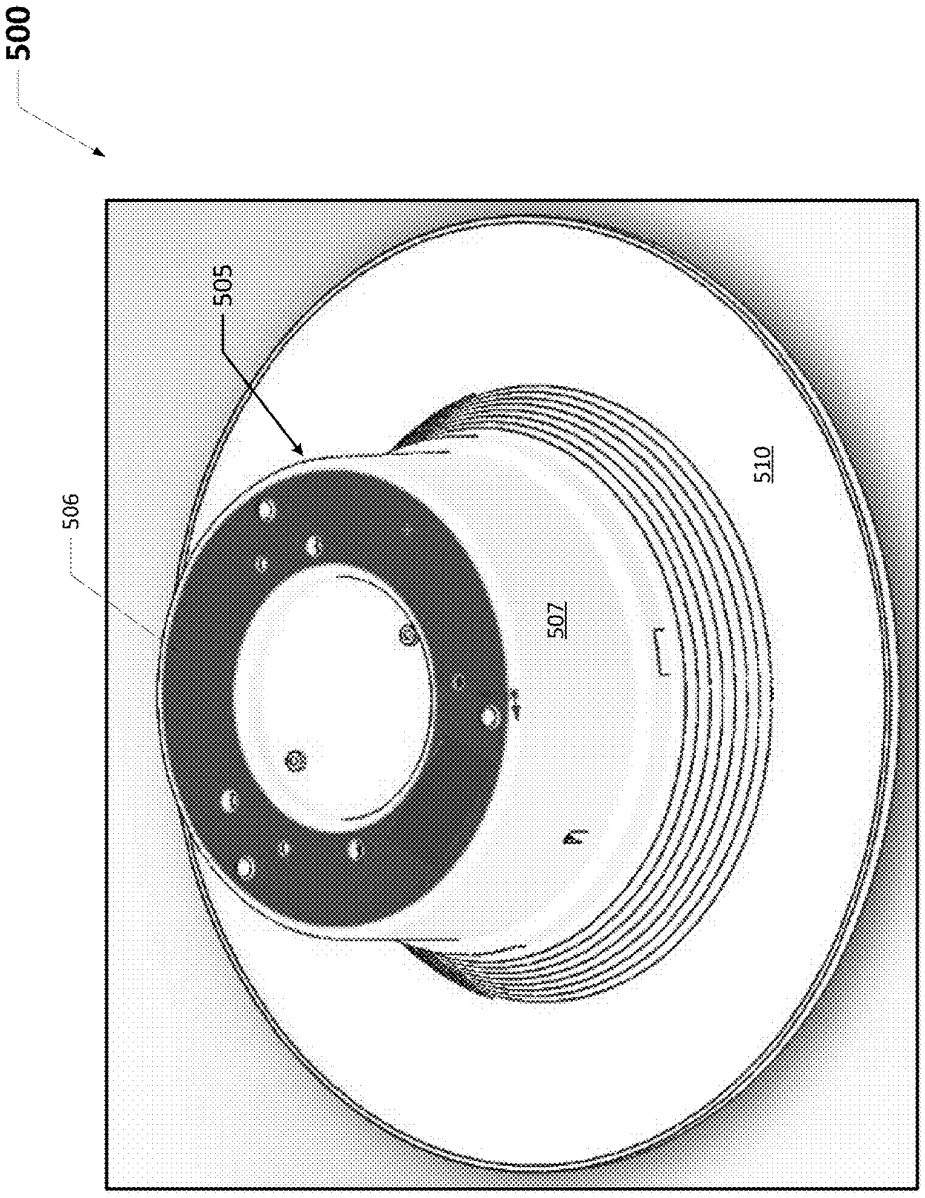

FIG. 5
(PRIOR ART)

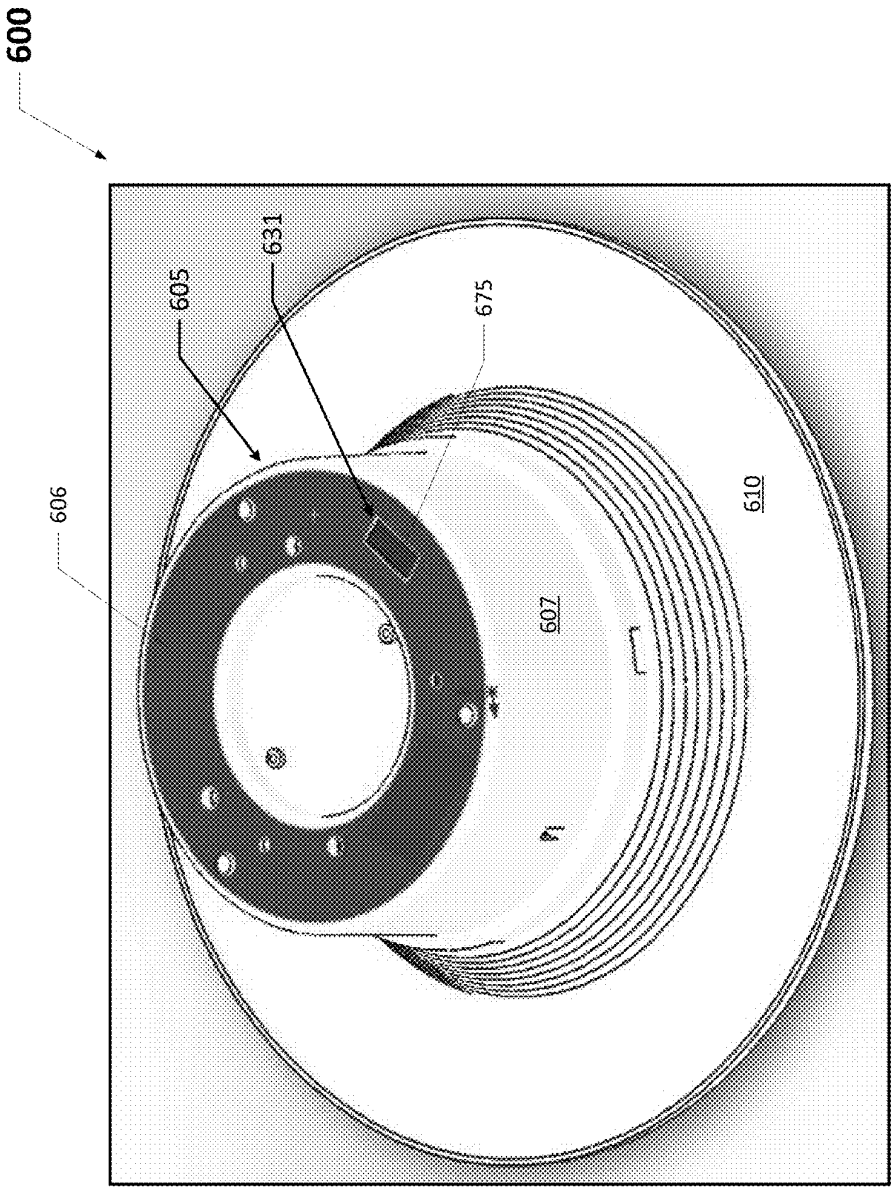

FIG. 6A

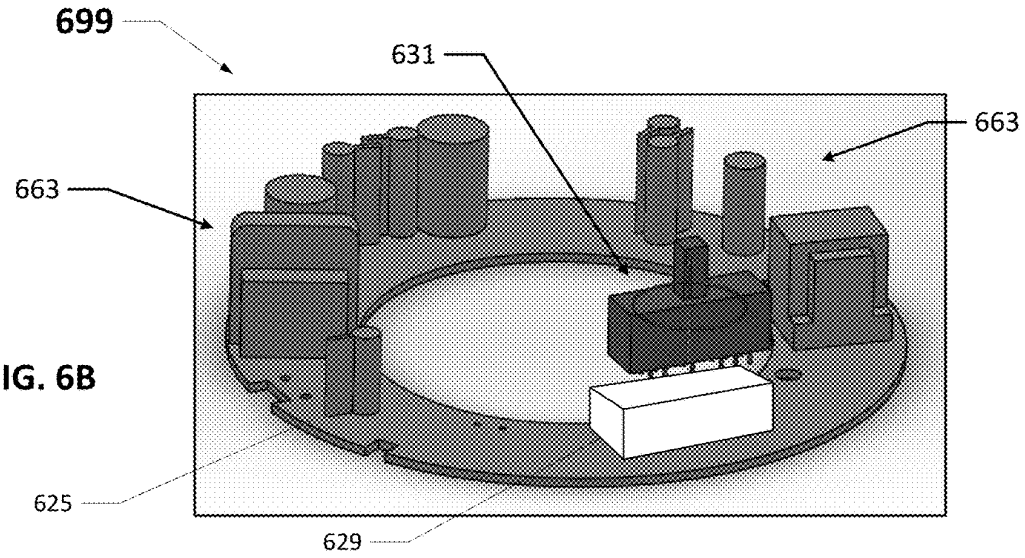
699
631
663
663
625
629

FIG. 6B

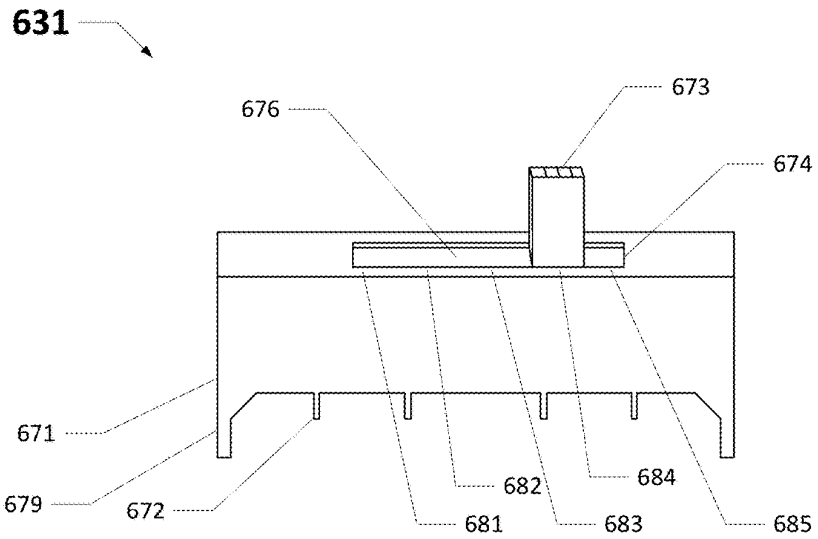
631
673
676
674
671
679
672
682
684
681
683
685

FIG. 6C

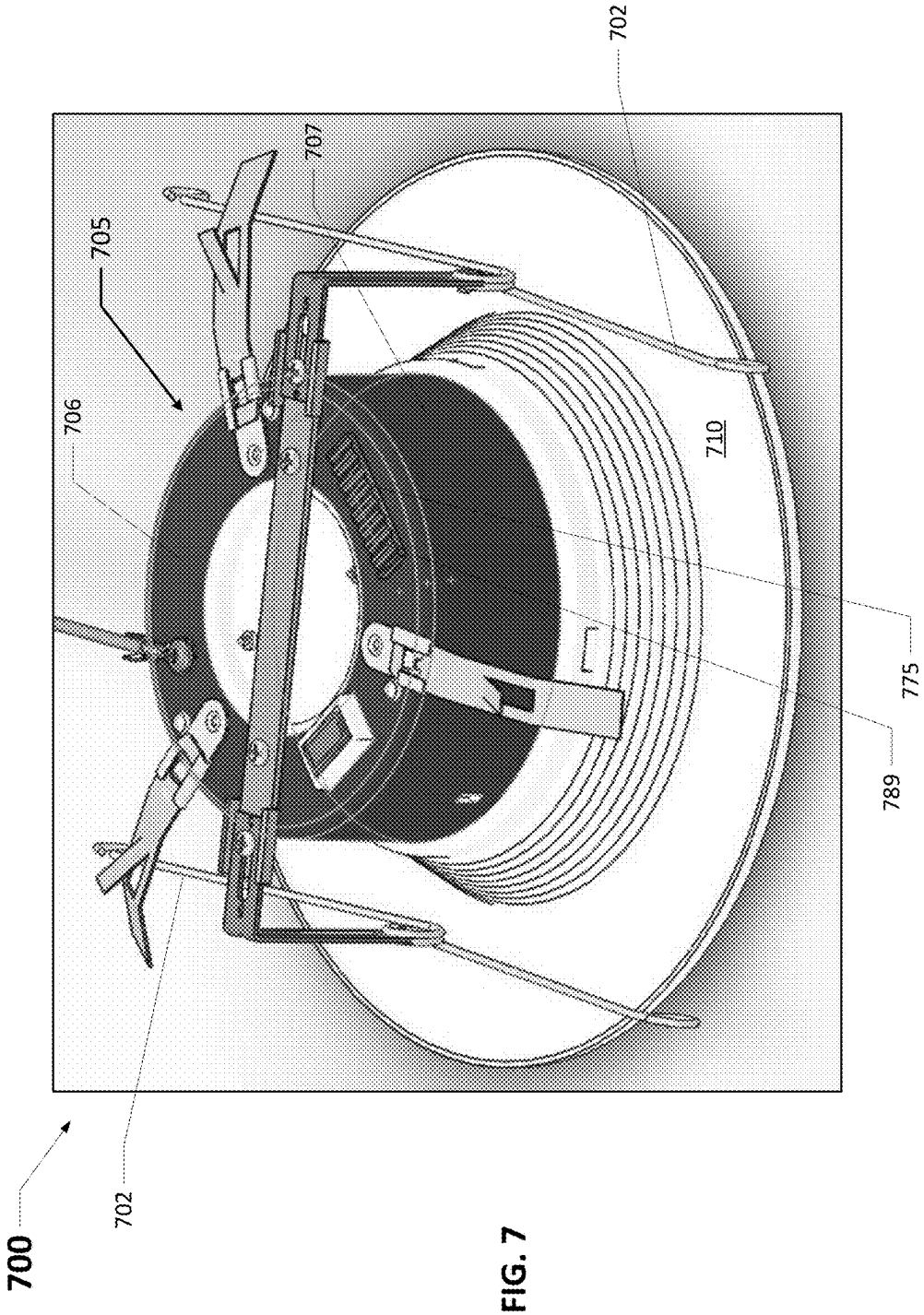

FIG. 7

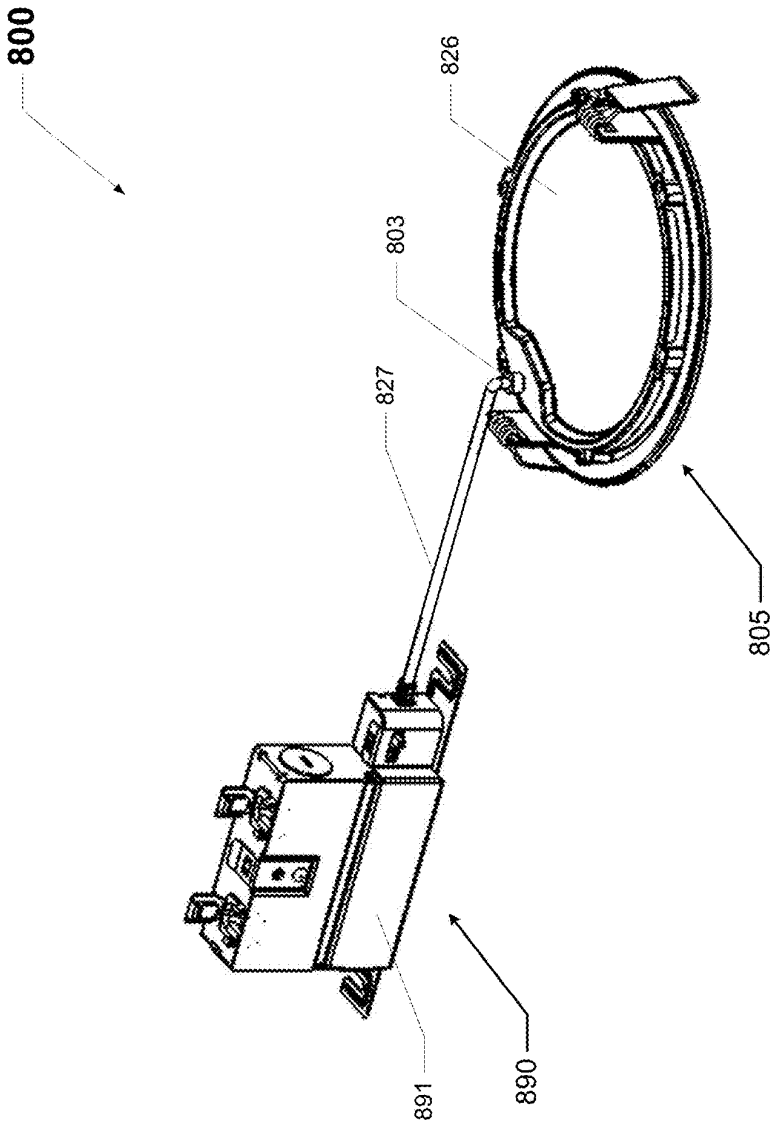

FIG. 8
(PRIOR ART)

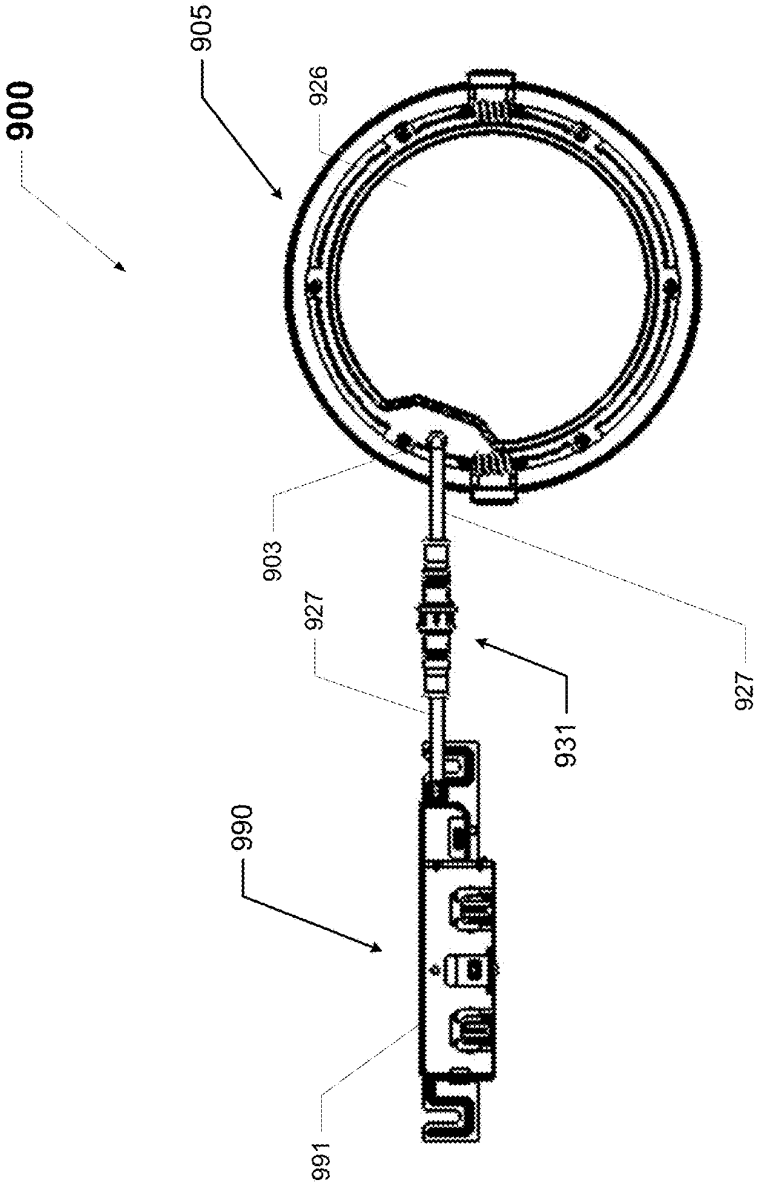

FIG. 9A

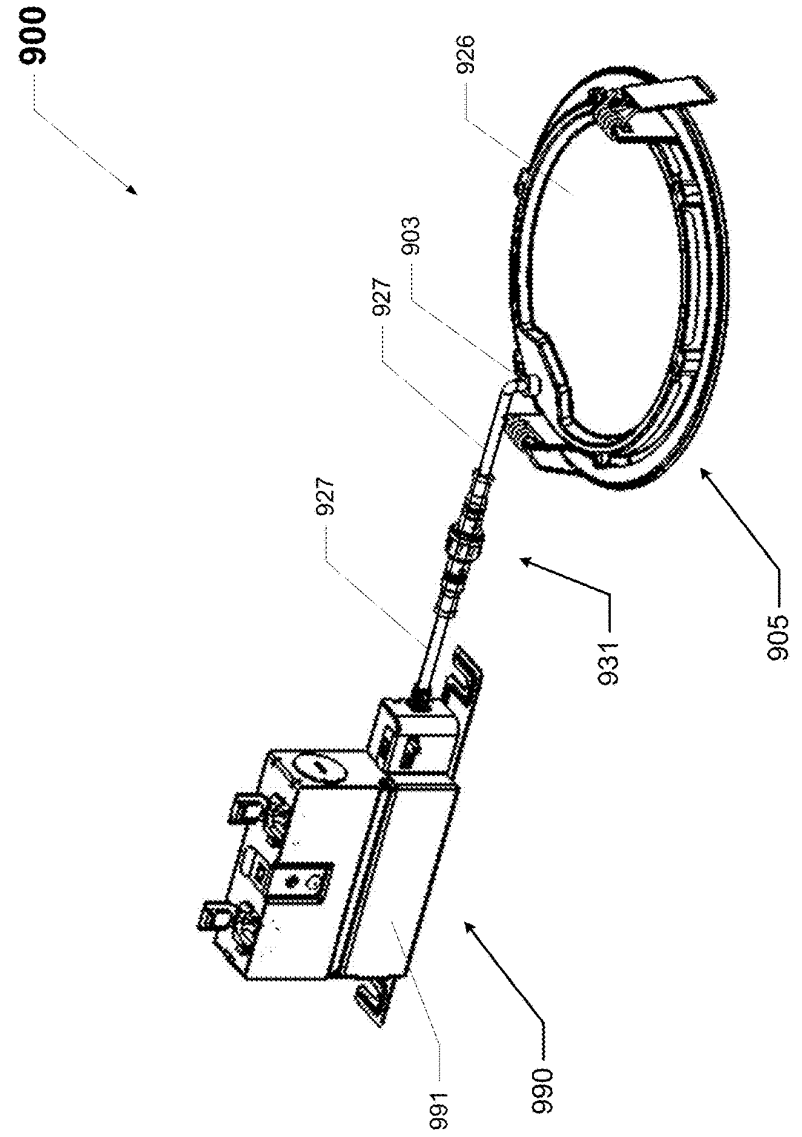

FIG. 9B

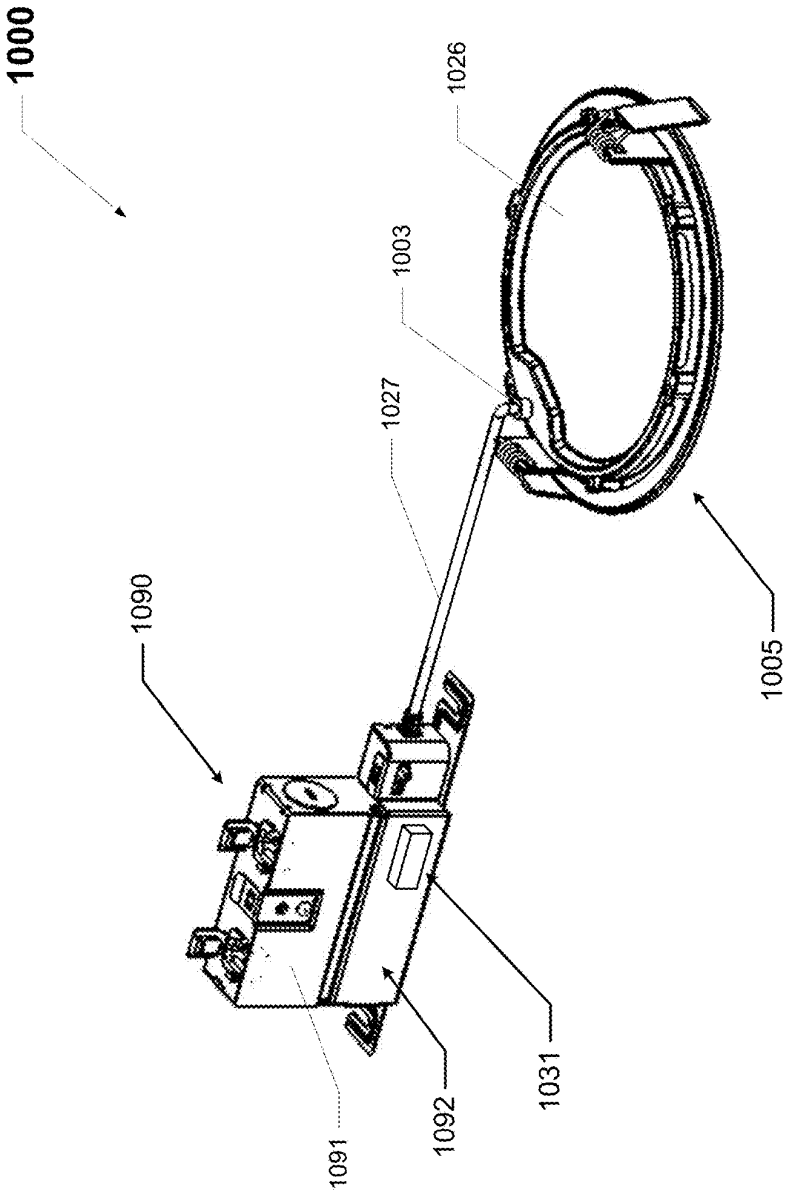

FIG. 10

CONFIGURABLE LIGHTING SYSTEM

CROSS REFERENCE TO RELATED APPLICATIONS

This application is a continuation-in-part of and claims priority to U.S. patent application Ser. No. 15/811,062, titled "Configurable Lighting System" and filed on Nov. 13, 2017, which is a continuation application of and claims priority to U.S. patent application Ser. No. 15/435,141, filed Feb. 16, 2017, and titled "Configurable Lighting System," which claims priority to U.S. Provisional Patent Application No. 62/297,424 filed Feb. 19, 2016, and titled "Configurable Lighting System". The entire contents of these aforementioned applications are hereby incorporated herein by reference.

TECHNICAL FIELD

Embodiments of the technology relate generally to lighting systems and more specifically to lighting systems that can be readily configured to produce illumination of different color temperatures.

BACKGROUND

For illumination applications, light emitting diodes (LEDs) offer substantial potential benefit associated with their energy efficiency, light quality, and compact size. However, to realize the full potential benefits offered by light emitting diodes, new technologies are needed.

With luminaires that incorporate incandescent or fluorescent technology, some flexibility can be obtained by swapping lamps to meet user preferences. In such luminaires, lamp selection can provide flexibility in terms of correlated color temperature (CCT or color temperature) and light output (lumen output). For example, a compact fluorescent downlight might accept 6-, 32-, and 42-watt lamps in 2700, 3000, and 3500 K CCT. Additionally, changing lamp position and focal point in a reflector of an incandescent or fluorescent fixture can change the fixture spacing criteria (SC) of a luminaire.

In contrast, conventional light-emitting-diode-based luminaires typically offer reduced flexibility when the luminaire's light-emitting-diode-based light source is permanently attached to the luminaire. Stocking conventional light-emitting-diode-based luminaires at distribution to accommodate multiple configurations that users may desire can entail maintaining a relatively large or cumbersome inventory.

Need is apparent for a technology to provide a light emitting diode system that can adapt to various applications, for example by delivering multiple color temperatures, multiple lumens, and/or multiple photometric distributions. Need further exists for a capability to enable a single luminaire to be stocked at distribution and then quickly configured according to application parameters and deployment dictates. Need further exists for luminaires that are both energy efficient and flexible. A capability addressing one or more such needs, or some other related deficiency in the art, would support improved illumination systems and more widespread utilization of light emitting diodes in lighting applications.

SUMMARY

In some aspects of the disclosure, a system can configure a luminaire for providing illumination of a selected color temperature, a selected lumen output, or a selected photometric distribution based on an input. The input may be field selectable or may be selectable at a distribution center or at a late stage of luminaire manufacture, for example.

In some aspects of the disclosure, the luminaire can comprise at least two light sources having different color temperatures. In a first configuration, the luminaire can produce illumination of a first color temperature using a first one of the light sources. In a second configuration, the luminaire can produce illumination of a second color temperature using a second one of the light sources. In a third configuration, the luminaire can produce illumination of a third color temperature using both of the first and second the light sources. The third color temperature may be between the first and second color temperatures. The value of the third color temperature within a range between the first and second color temperatures can be controlled by manipulating the relative amounts of light output by the first and second light sources. That is, adjusting the lumen outputs of the first and second light sources can define the color temperature of the illumination produced by the luminaire in the third configuration.

In some aspects of the disclosure, the luminaire can comprise at least two light sources having different lumen outputs. In a first configuration, the luminaire can produce illumination of a first lumen output using a first one of the light sources. In a second configuration, the luminaire can produce illumination of a second lumen output using a second one of the light sources. In a third configuration, the luminaire can produce illumination of a third lumen output using both of the first and second light sources.

In some aspects of the disclosure, the luminaire can comprise at least two light sources having different photometric distributions. In a first configuration, the luminaire can produce illumination of a first photometric distribution using a first one of the light sources. In a second configuration, the luminaire can produce illumination of a second photometric distribution using a second one of the light sources. In a third configuration, the luminaire can produce illumination of a third photometric distribution using both of the first and second light sources.

In some aspects of the disclosure, a circuit and an associated input to the circuit can configure a luminaire for providing illumination having a selected property, for example a selected color temperature, a selected lumen output, or a selected photometric distribution. The input can be settable to a first number of states. The circuit can map the first number of states into a second number of states that is less than the first number of states. For example, the input can have four states and the circuit can map these four states into three states. The three states can correspond to three different values of the illumination property, for example three different color temperatures, three different lumen outputs, or three different photometric distributions.

The foregoing discussion of controlling illumination is for illustrative purposes only. Various aspects of the present disclosure may be more clearly understood and appreciated from a review of the following text and by reference to the associated drawings and the claims that follow. Other aspects, systems, methods, features, advantages, and objects of the present disclosure will become apparent to one with skill in the art upon examination of the following drawings and text. It is intended that all such aspects, systems, methods, features, advantages, and objects are to be

Luminex v. Signify
Luminex Exhibit 1001
Page 021

included within this description and covered by this application and by the appended claims of the application.

BRIEF DESCRIPTION OF THE DRAWINGS

FIGS. **1**A, **1**B, **1**C, **1**D, **1**E, **1**F, **1**G, **1**H, **1**I, **1**J, and **1**K (collectively FIG. **1**) illustrate views of a luminaire in accordance with some example embodiments of the disclosure.

FIG. **2** illustrates a functional block diagram of a circuit that a luminaire can comprise in accordance with some example embodiments of the disclosure.

FIG. **3** illustrates a state table for a circuit that a luminaire can comprise in accordance with some example embodiments of the disclosure.

FIG. **4** illustrates a schematic of a circuit that a luminaire can comprise in accordance with some example embodiments of the disclosure.

FIG. **5** shows a luminaire currently known in the art.

FIGS. **6**A-**6**C show a luminaire that includes a switch in accordance with certain example embodiments.

FIG. **7** shows a luminaire that is configured to receive a switch in accordance with certain example embodiments.

FIG. **8** shows another luminaire currently known in the art.

FIGS. **9**A and **9**B show another luminaire that includes a switch in accordance with certain example embodiments.

FIG. **10** shows yet another luminaire that includes a switch in accordance with certain example embodiments.

Many aspects of the disclosure can be better understood with reference to the above drawings. The drawings illustrate only example embodiments and are therefore not to be considered limiting of the embodiments described, as other equally effective embodiments are within the scope and spirit of this disclosure. The elements and features shown in the drawings are not necessarily drawn to scale, emphasis instead being placed upon clearly illustrating principles of the embodiments. Additionally, certain dimensions or positionings may be exaggerated to help visually convey certain principles. In the drawings, similar reference numerals among different figures designate like or corresponding, but not necessarily identical, elements.

DETAILED DESCRIPTION OF EXAMPLE EMBODIMENTS

In some example embodiments of the disclosure, a luminaire can comprise multiple groups of light emitting diodes of different color temperatures and a constant current power supply for powering the light emitting diodes. The power supply can utilize a switching scheme that can turn each group of light emitting diodes on and off to change the color temperature of the luminaire. In some example embodiments, the power supply can further vary the relative intensities of the light emitting diodes to manipulate the color temperature of the luminaire within a range.

For example, the luminaire can comprise a 3,000 K group of light emitting diodes and a 4,000 K group of light emitting diodes. When only the 3,000 K group is on, the luminaire can deliver 3,000 K illumination. When only the 4,000 K group is on, the luminaire can deliver 4,000 K illumination. When the 3,000 K group and the 4,000 K group are both on, the luminaire can deliver 3,500 K illumination. If the 4,000 K group of light emitting diodes is concurrently operated at a low lumen output and the 3,000 K group is operated at a high lumen output, the luminaire may deliver illumination of another selected color temperature, for example 3,100 K.

In some example embodiments, a controller can adjust lumen output automatically to maintain constant delivered lumens across multiple color temperatures or to suite application requirements. The controller implements the adjustment utilizing programmable driver current and/or via turning on and off various groups of light emitting diodes. Configurable color temperature or lumen output can function in combination with integral dimming, for example to facilitate interface with building automation, sensors, and dimmers.

In some example embodiments, luminaires can achieve an additional level of flexible configuration at a distribution center using interchangeable optics. For example, primary optics can provide medium distribution (e.g. spacing criteria equals 1.0), while a diffuser or concentrator lens can be used to achieve wide distribution (e.g. spacing criteria equals 1.4), and narrow distribution (e.g. spacing criteria equals 0.4).

In some example embodiments, a luminaire's configuration of delivered lumens and color temperatures can be set at the factory, at distribution, or in the field. To meet current and emerging code compliance, performance markings on a luminaire can indicate and correspond to the desired setting. Economical, field-installed nameplates can identify the various electrical and optical performance ratings and, when installed, permanently program the delivered lumens and color temperature. Other settings, such as dimming protocols, can likewise be configured. The interface between the nameplate and internal logic can use mechanical, electrical or optical means, for example.

Accordingly, in some embodiments of the disclosure, the technology provides product markings and supports regulatory compliance. For example, nameplates can indicate energy codes and rebate opportunities, for compliance with product labeling and to facilitate compliance confirmation by local authorities who may have jurisdiction. Further, luminaires that include example switches can be subject to meeting certain standards and/or requirements. For example, Underwriters Laboratories (UL), the National Electric Code (NEC), the National Electrical Manufacturers Association (NEMA), the International Electrotechnical Commission (IEC), the Federal Communication Commission (FCC), the Illuminating Engineering Society (IES), and the Institute of Electrical and Electronics Engineers (IEEE) set standards as to luminaires. Use of example embodiments described herein meet (and/or allow a corresponding luminaire to meet) such standards when required.

If a component of a figure is described but not expressly shown or labeled in that figure, the label used for a corresponding component in another figure can be inferred to that component. Conversely, if a component in a figure is labeled but not described, the description for such component can be substantially the same as the description for the corresponding component in another figure. Further, a statement that a particular embodiment (e.g., as shown in a figure herein) does not have a particular feature or component does not mean, unless expressly stated, that such embodiment is not capable of having such feature or component. For example, for purposes of present or future claims herein, a feature or component that is described as not being included in an example embodiment shown in one or more particular drawings is capable of being included in one or more claims that correspond to such one or more particular drawings herein.

Example embodiments of configurable lighting systems will be described more fully hereinafter with reference to the accompanying drawings, in which example embodiments of

Luminex v. Signify
Luminex Exhibit 1001
Page 022

configurable lighting systems are shown. Configurable lighting systems may, however, be embodied in many different forms and should not be construed as limited to the example embodiments set forth herein. Rather, these example embodiments are provided so that this disclosure will be thorough and complete, and will fully convey the scope of configurable lighting systems to those of ordinary skill in the art. Like, but not necessarily the same, elements (also sometimes called components) in the various figures are denoted by like reference numerals for consistency.

Terms such as "first", "second", "third", "fourth", "fifth", "top", bottom", "side", and "within" are used merely to distinguish one component (or part of a component or state of a component) from another. Such terms are not meant to denote a preference or a particular orientation, and are not meant to limit embodiments of configurable lighting systems. In the following detailed description of the example embodiments, numerous specific details are set forth in order to provide a more thorough understanding of the invention. However, it will be apparent to one of ordinary skill in the art that the invention may be practiced without these specific details. In other instances, well-known features have not been described in detail to avoid unnecessarily complicating the description.

Referring now to FIG. **1**, multiple views of the luminaire **100** are shown. FIG. **1**A illustrates a side perspective view of the luminaire **100**. FIG. **1**B illustrates a top perspective view of the luminaire **100**. FIG. **1**C illustrates a view of the light-emitting bottom of the luminaire **100**, showing a lens **120** in a light-emitting aperture **115** of the luminaire **100**. FIG. **1**D illustrates a view of the light-emitting bottom of the luminaire **100** with the lens **120** removed from the light-emitting aperture **115** of the luminaire. FIG. **1**E illustrates a view of the light-emitting bottom of the luminaire **100** with the lens **120** and an associated reflector **130** removed from the light-emitting aperture **115** of the luminaire. FIG. **1**F illustrates a cutaway perspective view of the luminaire **100**. FIG. **1**G illustrates another cutaway perspective view of the luminaire **100**. FIG. **1**H illustrates another cutaway view of the luminaire **100**. FIGS. **1**I, **1**J, and **1**K provide detailed views of a portion of the luminaire **100** comprising a cover **126** and an associated access aperture **129** for providing internal access to the luminaire **100**. In FIG. **1**I, the cover **126** is fully removed. In FIG. **1**J, the cover **126** is positioned adjacent the access aperture **129**, for example in connection with attachment or removal of the cover **126**. In FIG. **1**K, the cover **126** is attached to the luminaire **100**.

As best seen in the views of FIGS. **1**A and **1**B, the illustrated example luminaire **100** is suited for inserting in an aperture in a ceiling to provide overhead lighting. In this example embodiment, the luminaire **100** can be characterized as an overhead light or a recessed ceiling light. Various other indoor and outdoor luminaires that may be mounted in a wide range of orientations can be substituted for the luminaire **100** illustrated in FIG. **1**.

The illustrated example luminaire **100** of FIG. **1** comprises a housing **105** that is circular with a protruding trim **110** that extends circumferentially about the housing **105**. When the luminaire **100** is installed in a ceiling aperture, the rim **100** circumscribes and covers the edge of the ceiling aperture for aesthetics, for support, and for blocking of debris from above the ceiling. Hanger clips **102** hold the luminaire **100** in place in installation.

As best illustrated in FIGS. **1**I, **1**J, and **1**K, the example luminaire **100** comprises an access aperture **129** and an associated cover **126**. The access aperture **129** provides access to the interior of the luminaire housing **105**, for example in the field and/or during luminaire installation. An installer can remove the cover **126** and manually set a dual inline pin (DIP) switch **131** to configure the luminaire **100** for long-term operation providing illumination with a selected color temperature, a selected lumen output, and/or a selected photometric distribution. As illustrated, the dual inline pin switch **131** is mounted on a circuit board adjacent the access aperture **129**, thereby facilitating convenient and efficient access in the field or at a distribution center, for example.

An electrical cable **127** extends through a wiring aperture **103** in the cover **126**. The electrical cable **127** terminates in a plug **132** that mates with a receptacle **133** that is mounted inside the housing **105** adjacent the access aperture **129** for convenient field access.

As illustrated, the example cover **126** comprises two notches **123**, **124** that each receives a respective screw **128** for holding the cover **126** in place. The notch **123** is disposed on the right side of the cover **126** and is sized to receive one of the screws **128**. Meanwhile, the notch **124** is disposed on a left side of the cover **126** and is sized to receive the other screw **128**.

The left notch **124** and the right notch **123** are oriented so that the cover **126** is rotatable about the right screw **128** when the right screw **128** is loosely disposed in the right notch **123**. In other words, cover rotation can occur when the right screw **128** is in the right notch **123** with threads engaged but prior to tightening. In this position, the cover **126** can rotate clockwise about the right screw **128**. Thus, the right screw **128** provides an axis of rotation for the cover **126**. This clockwise rotation facilitates convenient manipulation of the cover **126** by a person working the cover **126** to cover the access aperture **129**, with the screws **128** engaged but not fully tightened. The clockwise rotation of the cover **126** about the right screw **128** provides the person with a capability to slide the left notch **124** of the cover **126** conveniently under the head of the left screw **128**. Once the cover **126** is rotated so the left notch **124** is under the head of the left screw **128**, the person (for example an installer) can tighten the two screws **128** to secure the cover **126**.

To remove the cover **126**, the person loosens the two screws **128** and then rotates the cover **126** counterclockwise about the right screw **128** so that the left notch **124** moves out from under the head of the left screw **128**. Once the left notch **124** is free from the left screw **128**, the installer can pull the right notch **123** out from under the right screw **128** to fully remove the cover **126**.

As best seen in the views of FIGS. **1**A, **1**C, **1**F, and **1**G, the lens **120** of the luminaire **100** is positioned adjacent the lower, exit side of the light-emitting aperture **115**. As illustrated, the lens **120** can mix and blend light emitted by two groups of light emitting diodes **150**, **155**, with each group having a different color temperature. In some embodiments, the two groups of light emitting diodes **150**, **155** may have color temperatures that differ by at least 500 Kelvin, for example. The group of light emitting diodes **150** can be characterized as one light emitting diode light source, while the group of light emitting diodes **155** can be characterized as another light emitting diode light source. Other embodiments of a light emitting diode light source may have a single light emitting diode or more light emitting diodes than the embodiment illustrated in FIG. **1**. A reflector **130** is disposed in and lines the aperture **115** to guide and manage the emitted light between the light emitting diodes **150**, **155** and the lens **120**. In some embodiments, an upper lens (not illustrated) replaces the reflector **130**.

Luminex v. Signify
Luminex Exhibit 1001
Page 023

The light emitting diodes **150**, **155** are mounted on a substrate **125**, for example a circuit board, and form part of a circuit **200**. In the illustrated embodiment, the light emitting diodes **150**, **155** are interspersed. In other embodiments, the light emitting diodes **150**, **155** may be separated from one another or spatially segregated according to color temperature or other appropriate parameter. As discussed in further detail below, the circuit **200** supplies electricity to the light emitting diodes **150**, **155** with a level of flexibility that facilitates multiple configurations suited to different applications and installation parameters.

Turning to FIGS. **2**, **3**, and **4**, some example embodiments of the circuit **200** will be discussed in further detail with example reference to the luminaire **100**. The circuit **200** can be applied to other indoor and outdoor luminaires.

Referring now to FIG. **2**, this figure illustrates an embodiment of the circuit **200** in an example block diagram form. The circuit **200** comprises a DC power supply **205** for supplying electrical energy that the circuit **200** delivers to the light emitting diodes **150**, **155**. In an example embodiment, the circuit **200** comprises a light emitting diode driver.

The dual inline pin switch **131** comprises individual switches **210** that provide an input for configuring the luminaire **100** to operate at a selected color temperature. In the illustrated embodiment, the circuit **200** comprises two manual switches **210**. Other embodiments may have fewer or more switches **210**. In various embodiments, the switches **210** can be mounted to the housing **105** of the luminaire **100**, for example within the housing **105** (as illustrated in FIG. **1** and discussed above) or on an exterior surface of the housing **105**. In some embodiments, the switches **210** are mounted on the substrate **125**. In some embodiments, the switches **210** are implemented via firmware or may be solid state.

As an alternative to the illustrated dual inline pin switch **131**, the input can comprise multiple DIP switches, one or more single in-line pin packages (SIP or SIPP), one or more rocker switches, one or more reed switches, one or more magnetic switches, one or more rotary switches, one or more rotary dials, one or more selectors or selector switches, one or more slide switches, one or more snap switches, one or more thumbwheels, one or more toggles or toggle switches, one or more keys or keypads, or one or more buttons or pushbuttons, to mention a few representative examples without limitation.

As further discussed below, a controller **215** operates the light emitting diodes **150**, **155** according to state of the switches **210**. In some example embodiments, the controller **215** comprises logic implemented in digital circuitry, for example discrete digital components or integrated circuitry. In some example embodiments, the controller **215** utilizes microprocessor-implemented logic with instructions stored in firmware or other static or non-transitory memory.

In the illustrated embodiment, the outputs of the controller **215** are connected to two MOSFET transistors **160** to control electrical flow through two light emitting diodes **150**, **155**. The illustrated MOSFET transistors **160** provide one example and can be replaced with other appropriate current control devices or circuits in various embodiments. The switches **210** thus configure the luminaire **100** to operate with either or both of the light emitting diodes **150**, **155**. The light emitting diodes **150**, **155** illustrated in FIG. **2** may represent two single light emitting diodes or two groups of light emitting diodes, for example.

FIG. **3** illustrates a representative table **300** describing operation of the circuit **100** according to some example embodiments. In the example of FIG. **3**, the light emitting diode **150** produces light having a color temperature of 3,000 Kelvin, and the light emitting diode **155** produces light having a color temperature of 4,000 Kelvin.

As shown in the example table **300**, when both of the switches **210** are in the on state, the controller **215** causes the light emitting diode **155** to be off and the light emitting diode **150** to be on. Accordingly, the luminaire **100** emits illumination having a color temperature of 3,000 Kelvin.

When both of the switches **210** are in the off state, the controller **215** causes the light emitting diode **155** to be on and the light emitting diode **150** to be off. Accordingly, the luminaire **100** emits illumination having a color temperature of 4,000 Kelvin.

When one of the switches **210** is in the off state and the other of the switches **210** is on the on state, the controller **215** causes the light emitting diode **155** to be on and the light emitting diode **150** to be on. The luminaire **100** thus emits illumination having a color temperature of 3,500 Kelvin. In some other example embodiments, the controller **215** can adjust the light output of one or both of the light emitting diodes **150**, **155** to set the color temperature to a specific value with the range of 3,000 to 4,000 Kelvin.

Accordingly, the controller **215** maps the four configurations of the two switches **210** to three states for configuring the two light emitting diodes **150**, **155** for permanent or long-term operation. Mapping two switch configurations to a single mode of long-term operation can simplify configuration instructions and reduce errors during field configuration. The resulting configurations support multiple color temperatures of illumination from a single luminaire **100**.

Some example embodiments support fewer or more than three states of illumination. For example, in one embodiment, the luminaire **100** comprises three strings of light emitting diodes **150** that have different color temperatures, such as 3,000 Kelvin, 2,700 Kelvin, and 4,000 Kelvin. In this example, in addition to the states illustrated in FIG. **3** and discussed above, the switching logic can support a fourth state in which only the 2,700 Kelvin string is on.

FIG. **4** illustrates a schematic of an example embodiment of the circuit **200**. The schematic of FIG. **4** provides one example implementation of the block diagram illustrated in FIG. **3**.

As illustrated in FIG. **4** in schematic form, the circuit **200** conforms to the foregoing discussion of the block diagram format of FIG. **3**. In FIG. **4**, the light emitting diodes **150**, **155** of FIG. **3** are respectively represented with groups of light emitting diodes **150**, **155**. Additionally, the schematic details include a thermal protective switch **305** for guarding against overheating. FIG. **4** thus provides one example schematic for an embodiment of the electrical system of the luminaire **100** illustrated in FIG. **1** and discussed above.

FIG. **5** shows a luminaire **500** currently known in the art. Referring to FIGS. **1A-5**, the luminaire **500** of FIG. **5** can include a housing **505** (also called an enclosure **505**) that is cylindrical in shape, having a top surface **506** (also sometimes called a top wall **506** or a top outer surface **506**) and a side surface **507** (also sometimes called a side wall **507** or a side outer surface **507**). These various surfaces of the housing **505** form a cavity.

Coupled to the bottom end of the housing **505** of FIG. **5** is a trim **510** (substantially similar to the trim **110** shown in FIGS. **1A-1K** above). As with the luminaire **100** of FIGS. **1A-1K**, the luminaire **500** (sometimes also called a light fixture **500**) can include one or more of a number of other components, including but not limited to a lens, a reflector, a controller, an energy storage device (e.g., battery), a power module (e.g., a LED driver), a sensor, and a number of LEDs. One or more of such components can be disposed

Luminex v. Signify
Luminex Exhibit 1001
Page 024

within a cavity formed by one or more surfaces (e.g., top surface **506**, side surface **507**) of the housing **505**, disposed on a portion (e.g., the housing **505**, the trim **510**) of the luminaire **500**, and/or physically remote from but in communication with the luminaire **500**.

FIGS. **6**A-**6**C show a luminaire **600** that includes a switch **631** in accordance with certain example embodiments. Specifically, FIG. **6**A shows a top-side perspective view of the luminaire **600**. FIG. **6**B shows a partially-exploded top-side perspective view of a circuit board assembly **699** of the luminaire **600**. FIG. **6**C shows a top-side perspective view of the switch **631**.

Referring to FIGS. **1**A-**6**C, the luminaire **600** of FIG. **6**A is substantially the same as the luminaire **500** of FIG. **5**, except as described below. For example, the luminaire **600** of FIG. **6**A can include a housing **605** that is cylindrical in shape, having a top surface **606** and a side surface **607**. Coupled to the bottom end of the housing **605** of FIG. **6**A can be a trim **610**. The housing **605** can be made of one or more of a number of thermally conductive materials (e.g., stainless steel, aluminum). In such a case, the housing **605** can act as a heat sink, absorbing heat generated by one or more components (e.g., LEDs, power modules, hardware processor, energy storage device) in thermal communication with the housing **605**, and subsequently dissipating the absorbed heat into the ambient environment.

As with the luminaires discussed above, the luminaire **600** can include one or more of a number of other components. Such components can be disposed within a cavity formed by the housing **605**, disposed on a portion (e.g., the housing **605**, the trim **610**) of the luminaire **600**, and/or physically remote from but in communication with the luminaire **600**. In this case, as shown in FIGS. **6**A-**6**C, some of those other components include a switch **631** and a number of other electrical components **663** (e.g., controller, capacitors, resistors, diodes, transistors, integrated circuits, hardware processor) disposed on a substrate **625**.

The substrate **625**, the electrical connector **629**, the other electrical components **663**, and part of the switch **631** in this case are disposed within a cavity formed by the housing **605**. In order for a user to be able to access the switch **631**, at least part of the switch **631** can be disposed within and protrude through an aperture **675** in a wall (in this case, the top surface **606**) of the housing **605**. As an alternative, part of the switch **631** can protrude through an aperture in the side surface **607** of the housing **605**. Permitting a user to access the switch **631** protruding through the aperture **675** in the housing **605** facilitates configuration of the luminaire **600** and avoids the need to open and/or disassemble the luminaire **600**.

The example switch **631** can be used to select one or more of a number of variables that affect the operation of the luminaire **600**. For example, the switch **631** can be used to select one of a number of CCTs. The switch **631** can be any of a number of types of switches, including but not limited to one or more DIP switches, one or more SIPP switches, one or more rocker switches, one or more reed switches, one or more magnetic switches, one or more rotary switches, one or more rotary dials, one or more selectors or selector switches, one or more slide switches (as shown in FIG. **6**C), one or more snap switches, one or more thumbwheels, one or more toggles or toggle switches, one or more keys or keypads, and one or more buttons or pushbuttons.

As mentioned above, the switch **631** of FIGS. **6**A-**6**C is a slide switch. The switch **631** has a body **671** and a number of coupling features **672** (in this case, pins) disposed on the bottom of the body **671** that allow the switch **631** to become electrically coupled to an electrical connector **629** on the substrate **625** (and therefore also to one or more of the other components **663** mounted on the substrate **625**, such as a controller, as described above). In some cases, adjacent to the coupling features **672** can be disposed one or more mechanical coupling features **679** (e.g., tabs, posts). In such a case, mechanical coupling features **679** can act as guides to properly position and align the coupling features **672** of the switch **631** relative to an electrical connector **629** mounted on the substrate **625**. At the top end of the body **671** is an actuator **673** that extends outward from a plate **676**. The plate **676** is disposed within the body **671** and has a length that is less than the length of the body **671**. The plate **676** also corresponds to a slot **674** that traverses the top end of the body **671**. The actuator **673** extends through the slot **674** and can be accessible by a user.

The switch **631** can include a number of detents and/or other features to limit or create discrete stopping locations for the actuator **673** (and so also the plate **676**) along the length of the slot **674**. Each of these detents and/or other features can be associated with a certain value of a variable that affects the operation of the luminaire **600**. For example, if the switch **631** is used to select a CCT, the left end **681** of the slot **674** can be associated with 5000 K, detent **682** can be associated with 4000 K, detent **683** can be associated with 3500 K, detent **684** can be associated with 3000 K, and right end **685** of the slot **674** can be associated with 2700 K.

Example switches **631** can be used with a new luminaire **600**. Alternatively example switches **631** can be retrofit into existing luminaires. Also, while FIGS. **6**A-**6**C show that the switch **631** is disposed within and coupled to the housing **605**, the switch **631** can alternatively be disposed within and/or coupled to some other portion (e.g., the trim **610**) of the luminaire **600**. In some cases, a luminaire can be manufactured without the switch, but with the ability to receive an example switch at a later time (e.g., during installation). For example, FIG. **7** shows a luminaire **700** that is configured to receive a switch in accordance with certain example embodiments. Referring to FIGS. **1**A-**7**, the luminaire **700** can be substantially the same as the luminaires discussed above, except as described below.

For example, the luminaire **700** of FIG. **7** can include an housing **705** that is cylindrical in shape, having a top surface **706** and a side surface **707**. Coupled to the bottom end of the housing **705** of FIG. **7** can be a trim **710**. Further, hanger clips **702** can be used to hold the luminaire **700** in place upon installation. In this case, the example switch is not coupled to the luminaire **700**. Instead, there is a removable plug **789** disposed in the aperture **775** that traverses the top surface **706** of the housing **705**. The removable plug **789** can be used to keep dust and other elements in the ambient environment from entering the cavity formed by the housing **705**.

In such a case, when a user (e.g., an installer, an electrician, a homeowner) wants to install an example switch on the luminaire **700**, the removable plug **789** can easily be removed (with or without a tool), and the example switch can be inserted into the connector inside the housing **705** that is subsequently exposed. Example switches can be incorporated into any of a number of different types of luminaires (light fixtures). For example, as shown in FIGS. **6**A-**7**, example switches can be used with down light fixtures. Other types of luminaires that can be used with example switches can include, but are not limited to, troffer lights, under cabinet lights, pendent lights, recessed lights, and wall scones,

FIG. **8** shows a top-side perspective view of another luminaire **800** currently known in the art. Referring to FIGS.

Luminex v. Signify
Luminex Exhibit 1001
Page 025

1A-8, the luminaire **800** of FIG. **8** in this case includes a housing **805** and a remotely located junction box **890**. In this case, the luminaire **800** includes a surface-mounted light fixture, and so the housing **805** is low profile. The cover **826** of the housing **805** is visible in FIG. **8**. An electrical cable **827** extends through a wiring aperture **803** in the cover **826**. The electrical cable **827** can include one or more electrical conductors to transfer power, control, communication, data, and/or any other type of electrical signals. One end of the electrical cable **827** is connected to one or more components (e.g., light sources) disposed on and/or within the housing **805** of the luminaire **800**.

The junction box **890** includes one or more walls **891** to enclose one or more electrical components (e.g., a driver). An opposing end of the electrical cable **827** is coupled to one or more of those electrical components disposed in the junction box **890**. In this way, the electrical cable **827** electrically couples one or more electrical components in the junction box **890** with one or more electrical components in or on the housing **805**.

FIGS. **9**A and **9**B show another luminaire **900** that includes a switch **931** in accordance with certain example embodiments. Specifically, FIG. **9**A shows a top view of the luminaire **900**, and FIG. **9**B shows a top-side-front perspective view of the luminaire **900**. Referring to FIGS. **1**A-**9**B, the luminaire **900** of FIGS. **9**A and **9**B is substantially the same as the luminaire **800** of FIG. **8**, except that the luminaire **900** of FIGS. **9**A and **9**B includes the example switch **931**.

For example, the luminaire **900** of FIGS. **9**A and **9**B in this case includes a housing **905** and a remotely located junction box **990**. In this case, the luminaire **900** includes a surface-mounted light fixture, and so the housing **905** is low profile. An electrical cable **927** extends through a wiring aperture **903** in the cover **926**. The electrical cable **927** can include one or more electrical conductors to transfer power, control, communication, data, and/or any other type of electrical signals. One end of the electrical cable **927** is connected to one or more components (e.g., light sources) disposed on and/or within the housing **905** of the luminaire **900**.

The housing **905** of the luminaire **900** can be installed in or on any of a number of structure members (e.g., drywall that forms a ceiling, a ceiling tile). The junction box **990** is located behind the ceiling and includes one or more walls **991** to enclose one or more electrical components (e.g., a driver). An opposing end of the electrical cable **927** is coupled to one or more of those electrical components disposed in the junction box **990**. In this way, the electrical cable **927** electrically couples one or more electrical components in the junction box **990** with one or more electrical components in or on the housing **905**. When the housing **905** is mounted in its installed location (e.g., the ceiling), the entire electrical cable **927** (and so also the switch **931**) is behind the structure member (e.g., ceiling) and is inaccessible. Similarly, when the housing **905** is mounted in its installed location (e.g., the ceiling), the junction box **990** can be inaccessible. When the housing **905** is removed from its installed location, the junction box **990** and the electrical cable **927** (and so also the switch **931**) can be accessible.

With the embodiments discussed previously, the example switch is located on the housing of the luminaire or within the housing of the luminaire. Here, the switch **931** is located outside of the housing **905** of the luminaire **900**. Specifically, in this case, the switch **931** is in-line with the electrical cable **927**. The switch **931** can be substantially the same as the example switches discussed above. For instance, the switch **931** can have one or more coupling features (e.g., terminal points) that are used to couple to one or more electrical conductors of one or more electrical cables **927**. As another example, the switch **931** can have an actuator having multiple positions.

As yet another example, the switch **931** can be or include an inline pin switch, multiple DIP switches, one or more single in-line pin packages (SIP or SIPP), one or more rocker switches, one or more reed switches, one or more magnetic switches, one or more rotary switches, one or more rotary dials, one or more selectors or selector switches, one or more slide switches, one or more snap switches, one or more thumbwheels, one or more toggles or toggle switches, one or more keys or keypads, or one or more buttons or pushbuttons.

The switch **931** can have a range of selections that are either continuous or discrete. As with the other switches described above, the switch **931** is used to adjust the CCT output by one or more of the light sources of the luminaire **900**, and each selection of the switch **931** corresponds to a CCT within a range of CCTs. When the switch **931** is in-line with the electrical cable **927**, as in this example, the switch **931** can be integrated with the electrical cable **927**. Alternatively, there can be two electrical cables **927**, where one electrical cable **927** is coupled to the one or more components inside the junction box **990** and one side of the switch **931**, and the other electrical cable **927** is coupled to the one or more components inside or on the housing **905** and the other side of the switch **931**. When the switch **931** is accessible (e.g., when the housing **905** is removed from its mounting location), the switch **931** can be replaced (e.g., without the use of tools) by a user.

FIG. **10** shows yet another luminaire **1000** that includes a switch **1031** in accordance with certain example embodiments. Referring to FIGS. **1**A-**10**, the luminaire **1000** of FIG. **10** is substantially the same as the luminaire **900** of FIGS. **9**A and **9**B, except that the switch **1031** of the luminaire **1000** of FIG. **10** is in a different location separate from the housing **1005**.

For example, the luminaire **1000** of FIG. **10** in this case includes a housing **1005** and a remotely located junction box **1090**. In this case, the luminaire **800** includes a surface-mounted light fixture, and so the housing **805** is low profile. The cover **1026** of the housing **1005** is shown in FIG. **10**. An electrical cable **1027** extends through a wiring aperture **1003** in the cover **1026**. The electrical cable **1027** can include one or more electrical conductors to transfer power, control, communication, data, and/or any other type of electrical signals. One end of the electrical cable **1027** is connected to one or more components (e.g., light sources) disposed on and/or within the housing **1005** of the luminaire **1000**. When the housing **1005** is mounted in its installed location (e.g., a ceiling), the entire electrical cable **1027** can be inaccessible. When the housing **1005** is removed from its installed location, the electrical cable **1027** can be accessible.

The junction box **1090** includes one or more walls **1091** to enclose one or more electrical components (e.g., a driver, the switch **1031**). In this case, one of the walls of the junction box **1090** is removed to show the switch **1031** disposed within the cavity **1092** formed by the walls **1091** of the junction box **1090**. An opposing end of the electrical cable **1027** is coupled to one or more of those electrical components disposed in the junction box **1090**. In this way, the electrical cable **1027** electrically couples one or more electrical components in the junction box **1090** with one or more electrical components in or on the housing **1005**. In this case, the switch **1031** is disposed within the junction box **1031**.

Luminex v. Signify
Luminex Exhibit 1001
Page 026

When the housing **1005** is mounted in its installed location (e.g., a ceiling), the junction box **1090** (and so also the switch **1031**) can be inaccessible. When the housing **1005** is removed from its installed location, the junction box **1090** (and so also the switch **1031**) can be accessible.

The switch **1031** of FIG. **10** can be substantially the same as the switch **931** described above with respect to FIGS. **9**A and **9**B. For example, the switch **1031** can have a range of selections that are either continuous or discrete. As with the other switches described above, the switch **1031** is used to adjust the CCT output by one or more of the light sources of the luminaire **1000**, and each selection of the switch **1031** corresponds to a CCT within a range of CCTs. As an alternative to the embodiment shown in FIG. **10**, rather than being disposed within the cavity **1092** of the junction box **1090**, the switch **1031** can be disposed on a wall **1091** of the junction box **1090** or remotely from the junction box **1090** as well as remotely from the housing **1005** of the luminaire **1000**.

As will be appreciated by those of ordinary skill, the textual and illustrated disclosure provided herein supports a wide range of embodiments and implementations. In some non-limiting example embodiments of the disclosure, a luminaire can comprise: a housing; a substrate disposed in the housing; a first plurality of light emitting diodes that are mounted to the substrate and that have a first color temperature; a second plurality of light emitting diodes that are mounted to the substrate and that have a second color temperature; and a plurality of manual switches that are disposed at the housing for permanently configuring the luminaire to: provide illumination of the first color temperature by enabling the first plurality of light emitting diodes; provide illumination of the second color temperature by enabling the second plurality of light emitting diodes; and provide illumination of a third color temperature that is between the first color temperature and the second color temperature by enabling the first plurality of light emitting diodes and the second plurality of light emitting diodes.

In some example embodiments of the luminaire, the housing can comprise an aperture that is configured for emitting area illumination, and the substrate is oriented to emit light through the aperture. In some example embodiments of the luminaire, the plurality of manual switches are mounted to the substrate. In some example embodiments of the luminaire, the plurality of manual switches are mounted in the housing. In some example embodiments of the luminaire, the plurality of manual switches are mounted to the housing. In some example embodiments of the luminaire, the plurality of manual switches comprise a dual inline pin (DIP) switch.

In some example embodiments of the luminaire, the plurality of manual switches provide two switch states, and each of the two switch states provides illumination of the third color temperature by enabling the first plurality of light emitting diodes and the second plurality of light emitting diodes. In some example embodiments of the luminaire, the housing is circular and comprises a lip configured for extending around an aperture in a ceiling. In some example embodiments of the luminaire, the housing comprises a wiring port disposed on a side of the housing. In some example embodiments of the luminaire, the housing comprises a light-emitting aperture in which the substrate is disposed.

In some example embodiments, the luminaire further comprises: an aperture disposed at a lower side of the housing; a lens disposed at the aperture for refracting light emitted by the first and second light emitting diodes; and a reflector that is disposed between the lens and the light emitting diodes and that is operative to reflect light between the first and second light emitting diodes and the lens. In some example embodiments of the luminaire, the housing is circular and comprises a lip configured for extending around an aperture in a ceiling. In some example embodiments of the luminaire, the housing comprises a wiring port disposed on a side of the housing. In some example embodiments of the luminaire, the housing forms a cavity associated with the aperture. In some example embodiments of the luminaire, the first and second light source are mounted to a substrate that is disposed at an end of the cavity. In some example embodiments, the luminaire further comprises a reflector that is disposed in the cavity between the lens and the first and second light sources, the reflector operative to reflect light between the first and second light sources and the lens.

Technology for providing a configurable a luminaire has been described. Many modifications and other embodiments of the disclosures set forth herein will come to mind to one skilled in the art to which these disclosures pertain having the benefit of the teachings presented in the foregoing descriptions and the associated drawings. Therefore, it is to be understood that the disclosures are not to be limited to the specific embodiments disclosed and that modifications and other embodiments are intended to be included within the scope of this application. Although specific terms are employed herein, they are used in a generic and descriptive sense only and not for purposes of limitation.

What is claimed is:

1. A luminaire comprising:

a housing comprising at least one outer surface that forms a first cavity;

at least one electrical component disposed, at least in part, within the first cavity;

an electrical cable comprising a first end and a second end, wherein the first end is coupled to the at least one electrical component; and

a switch coupled to the electrical cable, wherein the switch is disposed remotely from the housing, wherein the switch has a plurality of positions, wherein each position of the plurality of positions of the switch corresponds to a discrete correlated color temperature (CCT) output by one or more light sources of the luminaire.

2. The luminaire of claim **1**, wherein the switch is a dial.

3. The luminaire of claim **1**, wherein each position of the plurality of positions is discrete.

4. The luminaire of claim **3**, wherein the plurality of positions of the switch comprises a first position, a second position, a third position, a fourth position, and a fifth position.

5. The luminaire of claim **4**, wherein the first position of the switch corresponds to 2700 Kelvin (K) output by the one or more light sources, wherein the second position of the switch corresponds to 3000 K output by the one or more light sources, wherein the third position of the switch corresponds to 3500 K output by the one or more light sources, wherein the fourth position of the switch corresponds to 4000 K output by the one or more light sources, and wherein the fifth position of the switch corresponds to 5000 K output by the one or more light sources.

6. The luminaire of claim **1**, wherein the switch is integrated with the electrical cable.

7. The luminaire of claim **1**, further comprising:

a junction box comprising at least one wall that forms a second cavity, wherein the switch is disposed within the

Luminex v. Signify
Luminex Exhibit 1001
Page 027

second cavity, wherein the second end of the electrical cable is coupled to the switch.

8. The luminaire of claim **1**, further comprising:

a junction box comprising at least one wall that forms a second cavity, wherein the second cavity has disposed therein at least one additional electrical component; and

an additional electrical cable,

wherein the switch is coupled to the second end of the electrical cable, wherein the additional electrical cable is coupled to the switch and to the at least one additional electrical component,

wherein the switch is disposed outside the second cavity.

9. The luminaire of claim **1**, wherein the switch is a slide switch.

10. The luminaire of claim **1**, wherein the switch is a rotary switch.

11. The luminaire of claim **1**, wherein the switch is inaccessible when the housing is installed.

12. The luminaire of claim **1**, wherein the switch is accessible to a user when the housing is removed from its installed location.

13. A switch for controlling a correlated color temperature (CCT) of light emitted by a luminaire, the switch comprising:

a body;

at least one first coupling feature disposed on the body, wherein the at least one first coupling feature is configured to electrically couple to an electrical cable of the luminaire; and

an actuator disposed on the body, wherein the actuator has a range of positions,

wherein each position of the range of positions of the actuator corresponds to a CCT of the light emitted by the luminaire.

14. The switch of claim **13**, wherein each position is continuous within the range of positions.

15. The switch of claim **13**, wherein each position is discrete within the range of positions.

16. The switch of claim **15**, wherein the range of positions comprises a first position, a second position, a third position, a fourth position, and a fifth position.

17. The switch of claim **13**, further comprising:

at least one second coupling feature disposed adjacent to the at least one first coupling feature, wherein the at least one second coupling feature is configured to electrically couple to an additional electrical cable of the luminaire.

18. The switch of claim **13**, wherein the body is configured to be integrated with the electrical cable.

19. The switch of claim **13**, wherein the body is configured to be disposed within a junction box.

20. The switch of claim **13**, wherein the switch is a rotary switch.

* * * * *