Electronic Patent Application Fee Transmittal

Application Number:	
Filing Date:	
Title of Invention:	Configurable Lighting System
First Named Inventor/Applicant Name:	John Edward Bowen
Filer:	Timothy M. Smith
Attorney Docket Number:	13682.227254

Filed as Large Entity

Filing Fees for Utility under 35 USC 111(a)

Description	Fee Code	Quantity	Amount	Sub-Total in USD($)
Basic Filing:				
UTILITY APPLICATION FILING	1011	1	300	300
UTILITY SEARCH FEE	1111	1	660	660
UTILITY EXAMINATION FEE	1311	1	760	760
Pages:				
Claims:				
Miscellaneous-Filing:				
Petition:				
Patent-Appeals-and-Interference:				

Description	Fee Code	Quantity	Amount	Sub-Total in USD($)
Post-Allowance-and-Post-Issuance:				
Extension-of-Time:				
Miscellaneous:				
			Total in USD ($)	**1720**

CONFIGURABLE LIGHTING SYSTEM

CROSS REFERENCE TO RELATED APPLICATIONS

[0001] This application is a continuation-in-part of and claims priority to U.S. Patent Application Serial Number 15/811,062, titled "Configurable Lighting System" and filed on November 13, 2017, which is a continuation application of and claims priority to U.S. Patent Application No. 15/435,141, filed February 16, 2017, and titled "Configurable Lighting System," which claims priority to U.S. Provisional Patent Application Number 62/297,424 filed February 19, 2016, and titled "Configurable Lighting System". The entire contents of these aforementioned applications are hereby incorporated herein by reference.

TECHNICAL FIELD

[0002] Embodiments of the technology relate generally to lighting systems and more specifically to lighting systems that can be readily configured to produce illumination of different color temperatures.

BACKGROUND

[0003] For illumination applications, light emitting diodes (LEDs) offer substantial potential benefit associated with their energy efficiency, light quality, and compact size. However, to realize the full potential benefits offered by light emitting diodes, new technologies are needed.

[0004] With luminaires that incorporate incandescent or fluorescent technology, some flexibility can be obtained by swapping lamps to meet user preferences. In such luminaires, lamp selection can provide flexibility in terms of correlated color temperature (CCT or color temperature) and light output (lumen output). For example, a compact fluorescent downlight might accept 6-, 32-, and 42-watt lamps in 2700, 3000, and 3500 K CCT. Additionally, changing lamp position and focal point in a reflector of an

incandescent or fluorescent fixture can change the fixture spacing criteria (SC) of a luminaire.

[0005] In contrast, conventional light-emitting-diode-based luminaires typically offer reduced flexibility when the luminaire's light-emitting-diode-based light source is permanently attached to the luminaire. Stocking conventional light-emitting-diode-based luminaires at distribution to accommodate multiple configurations that users may desire can entail maintaining a relatively large or cumbersome inventory.

[0006] Need is apparent for a technology to provide a light emitting diode system that can adapt to various applications, for example by delivering multiple color temperatures, multiple lumens, and/or multiple photometric distributions. Need further exists for a capability to enable a single luminaire to be stocked at distribution and then quickly configured according to application parameters and deployment dictates. Need further exists for luminaires that are both energy efficient and flexible. A capability addressing one or more such needs, or some other related deficiency in the art, would support improved illumination systems and more widespread utilization of light emitting diodes in lighting applications.

SUMMARY

[0007] In some aspects of the disclosure, a system can configure a luminaire for providing illumination of a selected color temperature, a selected lumen output, or a selected photometric distribution based on an input. The input may be field selectable or may be selectable at a distribution center or at a late stage of luminaire manufacture, for example.

[0008] In some aspects of the disclosure, the luminaire can comprise at least two light sources having different color temperatures. In a first configuration, the luminaire can produce illumination of a first color temperature using a first one of the light sources. In a second configuration, the luminaire can produce illumination of a second color temperature using a second one of the light sources. In a third configuration, the luminaire can produce illumination of a third color temperature using both of the first and second the light sources. The third color temperature may be between the first and

Luminex v. Signify
Luminex Exhibit 1007
Page 004

second color temperatures. The value of the third color temperature within a range between the first and second color temperatures can be controlled by manipulating the relative amounts of light output by the first and second light sources. That is, adjusting the lumen outputs of the first and second light sources can define the color temperature of the illumination produced by the luminaire in the third configuration.

[0009] In some aspects of the disclosure, the luminaire can comprise at least two light sources having different lumen outputs. In a first configuration, the luminaire can produce illumination of a first lumen output using a first one of the light sources. In a second configuration, the luminaire can produce illumination of a second lumen output using a second one of the light sources. In a third configuration, the luminaire can produce illumination of a third lumen output using both of the first and second light sources.

[0010] In some aspects of the disclosure, the luminaire can comprise at least two light sources having different photometric distributions. In a first configuration, the luminaire can produce illumination of a first photometric distribution using a first one of the light sources. In a second configuration, the luminaire can produce illumination of a second photometric distribution using a second one of the light sources. In a third configuration, the luminaire can produce illumination of a third photometric distribution using both of the first and second light sources.

[0011] In some aspects of the disclosure, a circuit and an associated input to the circuit can configure a luminaire for providing illumination having a selected property, for example a selected color temperature, a selected lumen output, or a selected photometric distribution. The input can be settable to a first number of states. The circuit can map the first number of states into a second number of states that is less than the first number of states. For example, the input can have four states and the circuit can map these four states into three states. The three states can correspond to three different values of the illumination property, for example three different color temperatures, three different lumen outputs, or three different photometric distributions.

[0012] The foregoing discussion of controlling illumination is for illustrative purposes only. Various aspects of the present disclosure may be more clearly understood

Luminex v. Signify
Luminex Exhibit 1007
Page 005

and appreciated from a review of the following text and by reference to the associated drawings and the claims that follow. Other aspects, systems, methods, features, advantages, and objects of the present disclosure will become apparent to one with skill in the art upon examination of the following drawings and text. It is intended that all such aspects, systems, methods, features, advantages, and objects are to be included within this description and covered by this application and by the appended claims of the application.

BRIEF DESCRIPTION OF THE DRAWINGS

[0013] Figures 1A, 1B, 1C, 1D, 1E, 1F, 1G, 1H, 1I, 1J, and 1K (collectively Figure 1) illustrate views of a luminaire in accordance with some example embodiments of the disclosure.

[0014] Figure 2 illustrates a functional block diagram of a circuit that a luminaire can comprise in accordance with some example embodiments of the disclosure.

[0015] Figure 3 illustrates a state table for a circuit that a luminaire can comprise in accordance with some example embodiments of the disclosure.

[0016] Figure 4 illustrates a schematic of a circuit that a luminaire can comprise in accordance with some example embodiments of the disclosure.

[0017] Figure 5 shows a luminaire currently known in the art.

[0018] Figures 6A-6C show a luminaire that includes a switch in accordance with certain example embodiments.

[0019] Figure 7 shows a luminaire that is configured to receive a switch in accordance with certain example embodiments.

[0020] Figure 8 shows another luminaire currently known in the art.

[0021] Figures 9A and 9B show another luminaire that includes a switch in accordance with certain example embodiments.

[0022] Figure 10 shows yet another luminaire that includes a switch in accordance with certain example embodiments.

Luminex v. Signify
Luminex Exhibit 1007
Page 006

[0023] Many aspects of the disclosure can be better understood with reference to the above drawings. The drawings illustrate only example embodiments and are therefore not to be considered limiting of the embodiments described, as other equally effective embodiments are within the scope and spirit of this disclosure. The elements and features shown in the drawings are not necessarily drawn to scale, emphasis instead being placed upon clearly illustrating principles of the embodiments. Additionally, certain dimensions or positionings may be exaggerated to help visually convey certain principles. In the drawings, similar reference numerals among different figures designate like or corresponding, but not necessarily identical, elements.

DETAILED DESCRIPTION OF EXAMPLE EMBODIMENTS

[0024] In some example embodiments of the disclosure, a luminaire can comprise multiple groups of light emitting diodes of different color temperatures and a constant current power supply for powering the light emitting diodes. The power supply can utilize a switching scheme that can turn each group of light emitting diodes on and off to change the color temperature of the luminaire. In some example embodiments, the power supply can further vary the relative intensities of the light emitting diodes to manipulate the color temperature of the luminaire within a range.

[0025] For example, the luminaire can comprise a 3,000 K group of light emitting diodes and a 4,000 K group of light emitting diodes. When only the 3,000 K group is on, the luminaire can deliver 3,000 K illumination. When only the 4,000 K group is on, the luminaire can deliver 4,000 K illumination. When the 3,000 K group and the 4,000 K group are both on, the luminaire can deliver 3,500 K illumination. If the 4,000 K group of light emitting diodes is concurrently operated at a low lumen output and the 3,000 K group is operated at a high lumen output, the luminaire may deliver illumination of another selected color temperature, for example 3,100 K.

[0026] In some example embodiments, a controller can adjust lumen output automatically to maintain constant delivered lumens across multiple color temperatures or to suite application requirements. The controller implements the adjustment utilizing programmable driver current and/or via turning on and off various groups of light

Luminex v. Signify
Luminex Exhibit 1007
Page 007

emitting diodes. Configurable color temperature or lumen output can function in combination with integral dimming, for example to facilitate interface with building automation, sensors, and dimmers.

[0027] In some example embodiments, luminaires can achieve an additional level of flexible configuration at a distribution center using interchangeable optics. For example, primary optics can provide medium distribution (e.g. spacing criteria equals 1.0), while a diffuser or concentrator lens can be used to achieve wide distribution (e.g. spacing criteria equals 1.4), and narrow distribution (e.g. spacing criteria equals 0.4).

[0028] In some example embodiments, a luminaire's configuration of delivered lumens and color temperatures can be set at the factory, at distribution, or in the field. To meet current and emerging code compliance, performance markings on a luminaire can indicate and correspond to the desired setting. Economical, field-installed nameplates can identify the various electrical and optical performance ratings and, when installed, permanently program the delivered lumens and color temperature. Other settings, such as dimming protocols, can likewise be configured. The interface between the nameplate and internal logic can use mechanical, electrical or optical means, for example.

[0029] Accordingly, in some embodiments of the disclosure, the technology provides product markings and supports regulatory compliance. For example, nameplates can indicate energy codes and rebate opportunities, for compliance with product labeling and to facilitate compliance confirmation by local authorities who may have jurisdiction. Further, luminaires that include example switches can be subject to meeting certain standards and/or requirements. For example, Underwriters Laboratories (UL), the National Electric Code (NEC), the National Electrical Manufacturers Association (NEMA), the International Electrotechnical Commission (IEC), the Federal Communication Commission (FCC), the Illuminating Engineering Society (IES), and the Institute of Electrical and Electronics Engineers (IEEE) set standards as to luminaires. Use of example embodiments described herein meet (and/or allow a corresponding luminaire to meet) such standards when required.

[0030] If a component of a figure is described but not expressly shown or labeled in that figure, the label used for a corresponding component in another figure can be

Luminex v. Signify
Luminex Exhibit 1007
Page 008

inferred to that component. Conversely, if a component in a figure is labeled but not described, the description for such component can be substantially the same as the description for the corresponding component in another figure. Further, a statement that a particular embodiment (e.g., as shown in a figure herein) does not have a particular feature or component does not mean, unless expressly stated, that such embodiment is not capable of having such feature or component. For example, for purposes of present or future claims herein, a feature or component that is described as not being included in an example embodiment shown in one or more particular drawings is capable of being included in one or more claims that correspond to such one or more particular drawings herein.

[0031] Example embodiments of configurable lighting systems will be described more fully hereinafter with reference to the accompanying drawings, in which example embodiments of configurable lighting systems are shown. Configurable lighting systems may, however, be embodied in many different forms and should not be construed as limited to the example embodiments set forth herein. Rather, these example embodiments are provided so that this disclosure will be thorough and complete, and will fully convey the scope of configurable lighting systems to those of ordinary skill in the art. Like, but not necessarily the same, elements (also sometimes called components) in the various figures are denoted by like reference numerals for consistency.

[0032] Terms such as "first", "second", "third", "fourth", "fifth", "top", bottom", "side", and "within" are used merely to distinguish one component (or part of a component or state of a component) from another. Such terms are not meant to denote a preference or a particular orientation, and are not meant to limit embodiments of configurable lighting systems. In the following detailed description of the example embodiments, numerous specific details are set forth in order to provide a more thorough understanding of the invention. However, it will be apparent to one of ordinary skill in the art that the invention may be practiced without these specific details. In other instances, well-known features have not been described in detail to avoid unnecessarily complicating the description.

[0033] Referring now to Figure 1, multiple views of the luminaire 100 are shown. Figure 1A illustrates a side perspective view of the luminaire 100. Figure 1B

Luminex v. Signify
Luminex Exhibit 1007
Page 009

illustrates a top perspective view of the luminaire 100. Figure 1C illustrates a view of the light-emitting bottom of the luminaire 100, showing a lens 120 in a light-emitting aperture 115 of the luminaire 100. Figure 1D illustrates a view of the light-emitting bottom of the luminaire 100 with the lens 120 removed from the light-emitting aperture 115 of the luminaire. Figure 1E illustrates a view of the light-emitting bottom of the luminaire 100 with the lens 120 and an associated reflector 130 removed from the light-emitting aperture 115 of the luminaire. Figure 1F illustrates a cutaway perspective view of the luminaire 100. Figure 1G illustrates another cutaway perspective view of the luminaire 100. Figure 1H illustrates another cutaway view of the luminaire 100. Figures 1I, 1J, and 1K provide detailed views of a portion of the luminaire 100 comprising a cover 126 and an associated access aperture 129 for providing internal access to the luminaire 100. In Figure 1I, the cover 126 is fully removed. In Figure 1J, the cover 126 is positioned adjacent the access aperture 129, for example in connection with attachment or removal of the cover 126. In Figure 1K, the cover 126 is attached to the luminaire 100.

[0034] As best seen in the views of Figures 1A and 1B, the illustrated example luminaire 100 is suited for inserting in an aperture in a ceiling to provide overhead lighting. In this example embodiment, the luminaire 100 can be characterized as an overhead light or a recessed ceiling light. Various other indoor and outdoor luminaires that may be mounted in a wide range of orientations can be substituted for the luminaire 100 illustrated in Figure 1.

[0035] The illustrated example luminaire 100 of Figure 1 comprises a housing 105 that is circular with a protruding trim 110 that extends circumferentially about the housing 105. When the luminaire 100 is installed in a ceiling aperture, the rim 100 circumscribes and covers the edge of the ceiling aperture for aesthetics, for support, and for blocking of debris from above the ceiling. Hanger clips 102 hold the luminaire 100 in place in installation.

[0036] As best illustrated in Figures 1I, 1J, and 1K, the example luminaire 100 comprises an access aperture 129 and an associated cover 126. The access aperture 129 provides access to the interior of the luminaire housing 105, for example in the field

Luminex v. Signify
Luminex Exhibit 1007
Page 010

and/or during luminaire installation. An installer can remove the cover 126 and manually set a dual inline pin (DIP) switch 131 to configure the luminaire 100 for long-term operation providing illumination with a selected color temperature, a selected lumen output, and/or a selected photometric distribution. As illustrated, the dual inline pin switch 131 is mounted on a circuit board adjacent the access aperture 129, thereby facilitating convenient and efficient access in the field or at a distribution center, for example.

[0037] An electrical cable 127 extends through a wiring aperture 103 in the cover 126. The electrical cable 127 terminates in a plug 132 that mates with a receptacle 133 that is mounted inside the housing 105 adjacent the access aperture 129 for convenient field access.

[0038] As illustrated, the example cover 126 comprises two notches 123, 124 that each receives a respective screw 128 for holding the cover 126 in place. The notch 123 is disposed on the right side of the cover 126 and is sized to receive one of the screws 128. Meanwhile, the notch 124 is disposed on a left side of the cover 126 and is sized to receive the other screw 128.

[0039] The left notch 124 and the right notch 123 are oriented so that the cover 126 is rotatable about the right screw 128 when the right screw 128 is loosely disposed in the right notch 123. In other words, cover rotation can occur when the right screw 128 is in the right notch 123 with threads engaged but prior to tightening. In this position, the cover 126 can rotate clockwise about the right screw 128. Thus, the right screw 128 provides an axis of rotation for the cover 126. This clockwise rotation facilitates convenient manipulation of the cover 126 by a person working the cover 126 to cover the access aperture 129, with the screws 128 engaged but not fully tightened. The clockwise rotation of the cover 126 about the right screw 128 provides the person with a capability to slide the left notch 124 of the cover 126 conveniently under the head of the left screw 128. Once the cover 126 is rotated so the left notch 124 is under the head of the left screw 128, the person (for example an installer) can tighten the two screws 128 to secure the cover 126.

Luminex v. Signify
Luminex Exhibit 1007
Page 011

[0040] To remove the cover 126, the person loosens the two screws 128 and then rotates the cover 126 counterclockwise about the right screw 128 so that the left notch 124 moves out from under the head of the left screw 128. Once the left notch 124 is free from the left screw 128, the installer can pull the right notch 123 out from under the right screw 128 to fully remove the cover 126.

[0041] As best seen in the views of Figures 1A, 1C, 1F, and 1G, the lens 120 of the luminaire 100 is positioned adjacent the lower, exit side of the light-emitting aperture 115. As illustrated, the lens 120 can mix and blend light emitted by two groups of light emitting diodes 150, 155, with each group having a different color temperature. In some embodiments, the two groups of light emitting diodes 150, 155 may have color temperatures that differ by at least 500 Kelvin, for example. The group of light emitting diodes 150 can be characterized as one light emitting diode light source, while the group of light emitting diodes 155 can be characterized as another light emitting diode light source. Other embodiments of a light emitting diode light source may have a single light emitting diode or more light emitting diodes than the embodiment illustrated in Figure 1. A reflector 130 is disposed in and lines the aperture 115 to guide and manage the emitted light between the light emitting diodes 150, 155 and the lens 120. In some embodiments, an upper lens (not illustrated) replaces the reflector 130.

[0042] The light emitting diodes 150, 155 are mounted on a substrate 125, for example a circuit board, and form part of a circuit 200. In the illustrated embodiment, the light emitting diodes 150, 155 are interspersed. In other embodiments, the light emitting diodes 150, 155 may be separated from one another or spatially segregated according to color temperature or other appropriate parameter. As discussed in further detail below, the circuit 200 supplies electricity to the light emitting diodes 150, 155 with a level of flexibility that facilitates multiple configurations suited to different applications and installation parameters.

[0043] Turning to Figures 2, 3, and 4, some example embodiments of the circuit 200 will be discussed in further detail with example reference to the luminaire 100. The circuit 200 can be applied to other indoor and outdoor luminaires.

Luminex v. Signify
Luminex Exhibit 1007
Page 012

[0044] Referring now to Figure 2, this figure illustrates an embodiment of the circuit 200 in an example block diagram form. The circuit 200 comprises a DC power supply 205 for supplying electrical energy that the circuit 200 delivers to the light emitting diodes 150, 155. In an example embodiment, the circuit 200 comprises a light emitting diode driver.

[0045] The dual inline pin switch 131 comprises individual switches 210 that provide an input for configuring the luminaire 100 to operate at a selected color temperature. In the illustrated embodiment, the circuit 200 comprises two manual switches 210. Other embodiments may have fewer or more switches 210. In various embodiments, the switches 210 can be mounted to the housing 105 of the luminaire 100, for example within the housing 105 (as illustrated in Figure 1 and discussed above) or on an exterior surface of the housing 105. In some embodiments, the switches 210 are mounted on the substrate 125. In some embodiments, the switches 210 are implemented via firmware or may be solid state.

[0046] As an alternative to the illustrated dual inline pin switch 131, the input can comprise multiple DIP switches, one or more single in-line pin packages (SIP or SIPP), one or more rocker switches, one or more reed switches, one or more magnetic switches, one or more rotary switches, one or more rotary dials, one or more selectors or selector switches, one or more slide switches, one or more snap switches, one or more thumbwheels, one or more toggles or toggle switches, one or more keys or keypads, or one or more buttons or pushbuttons, to mention a few representative examples without limitation.

[0047] As further discussed below, a controller 215 operates the light emitting diodes 150, 155 according to state of the switches 210. In some example embodiments, the controller 215 comprises logic implemented in digital circuitry, for example discrete digital components or integrated circuitry. In some example embodiments, the controller 215 utilizes microprocessor-implemented logic with instructions stored in firmware or other static or non-transitory memory.

[0048] In the illustrated embodiment, the outputs of the controller 215 are connected to two MOSFET transistors 160 to control electrical flow through two light

Luminex v. Signify
Luminex Exhibit 1007
Page 013

emitting diodes 150, 155. The illustrated MOSFET transistors 160 provide one example and can be replaced with other appropriate current control devices or circuits in various embodiments. The switches 210 thus configure the luminaire 100 to operate with either or both of the light emitting diodes 150, 155. The light emitting diodes 150, 155 illustrated in Figure 2 may represent two single light emitting diodes or two groups of light emitting diodes, for example.

[0049] Figure 3 illustrates a representative table 300 describing operation of the circuit 100 according to some example embodiments. In the example of Figure 3, the light emitting diode 150 produces light having a color temperature of 3,000 Kelvin, and the light emitting diode 155 produces light having a color temperature of 4,000 Kelvin.

[0050] As shown in the example table 300, when both of the switches 210 are in the on state, the controller 215 causes the light emitting diode 155 to be off and the light emitting diode 150 to be on. Accordingly, the luminaire 100 emits illumination having a color temperature of 3,000 Kelvin.

[0051] When both of the switches 210 are in the off state, the controller 215 causes the light emitting diode 155 to be on and the light emitting diode 150 to be off. Accordingly, the luminaire 100 emits illumination having a color temperature of 4,000 Kelvin.

[0052] When one of the switches 210 is in the off state and the other of the switches 210 is on the on state, the controller 215 causes the light emitting diode 155 to be on and the light emitting diode 150 to be on. The luminaire 100 thus emits illumination having a color temperature of 3,500 Kelvin. In some other example embodiments, the controller 215 can adjust the light output of one or both of the light emitting diodes 150, 155 to set the color temperature to a specific value with the range of 3,000 to 4,000 Kelvin.

[0053] Accordingly, the controller 215 maps the four configurations of the two switches 210 to three states for configuring the two light emitting diodes 150, 155 for permanent or long-term operation. Mapping two switch configurations to a single mode of long-term operation can simplify configuration instructions and reduce errors during

Luminex v. Signify
Luminex Exhibit 1007
Page 014

field configuration. The resulting configurations support multiple color temperatures of illumination from a single luminaire 100.

[0054] Some example embodiments support fewer or more than three states of illumination. For example, in one embodiment, the luminaire 100 comprises three strings of light emitting diodes 150 that have different color temperatures, such as 3,000 Kelvin, 2,700 Kelvin, and 4,000 Kelvin. In this example, in addition to the states illustrated in Figure 3 and discussed above, the switching logic can support a fourth state in which only the 2,700 Kelvin string is on.

[0055] Figure 4 illustrates a schematic of an example embodiment of the circuit 200. The schematic of Figure 4 provides one example implementation of the block diagram illustrated in Figure 3.

[0056] As illustrated in Figure 4 in schematic form, the circuit 200 conforms to the foregoing discussion of the block diagram format of Figure 3. In Figure 4, the light emitting diodes 150, 155 of Figure 3 are respectively represented with groups of light emitting diodes 150, 155. Additionally, the schematic details include a thermal protective switch 305 for guarding against overheating. Figure 4 thus provides one example schematic for an embodiment of the electrical system of the luminaire 100 illustrated in Figure 1 and discussed above.

[0057] Figure 5 shows a luminaire 500 currently known in the art. Referring to Figures 1A-5, the luminaire 500 of Figure 5 can include a housing 505 (also called an enclosure 505) that is cylindrical in shape, having a top surface 506 (also sometimes called a top wall 506 or a top outer surface 506) and a side surface 507 (also sometimes called a side wall 507 or a side outer surface 507). These various surfaces of the housing 505 form a cavity.

[0058] Coupled to the bottom end of the housing 505 of Figure 5 is a trim 510 (substantially similar to the trim 110 shown in Figures 1A-1K above). As with the luminaire 100 of Figures 1A-1K, the luminaire 500 (sometimes also called a light fixture 500) can include one or more of a number of other components, including but not limited to a lens, a reflector, a controller, an energy storage device (e.g., battery), a power module (e.g., a LED driver), a sensor, and a number of LEDs. One or more of such components

can be disposed within a cavity formed by one or more surfaces (e.g., top surface 506, side surface 507) of the housing 505, disposed on a portion (e.g., the housing 505, the trim 510) of the luminaire 500, and/or physically remote from but in communication with the luminaire 500.

[0059] Figures 6A-6C show a luminaire 600 that includes a switch 631 in accordance with certain example embodiments. Specifically, Figure 6A shows a top-side perspective view of the luminaire 600. Figure 6B shows a partially-exploded top-side perspective view of a circuit board assembly 699 of the luminaire 600. Figure 6C shows a top-side perspective view of the switch 631.

[0060] Referring to Figures 1A-6C, the luminaire 600 of Figure 6A is substantially the same as the luminaire 500 of Figure 5, except as described below. For example, the luminaire 600 of Figure 6A can include a housing 605 that is cylindrical in shape, having a top surface 606 and a side surface 607. Coupled to the bottom end of the housing 605 of Figure 6A can be a trim 610. The housing 605 can be made of one or more of a number of thermally conductive materials (e.g., stainless steel, aluminum). In such a case, the housing 605 can act as a heat sink, absorbing heat generated by one or more components (e.g., LEDs, power modules, hardware processor, energy storage device) in thermal communication with the housing 605, and subsequently dissipating the absorbed heat into the ambient environment.

[0061] As with the luminaires discussed above, the luminaire 600 can include one or more of a number of other components. Such components can be disposed within a cavity formed by the housing 605, disposed on a portion (e.g., the housing 605, the trim 610) of the luminaire 600, and/or physically remote from but in communication with the luminaire 600. In this case, as shown in Figures 6A-6C, some of those other components include a switch 631 and a number of other electrical components 663 (e.g., controller, capacitors, resistors, diodes, transistors, integrated circuits, hardware processor) disposed on a substrate 625.

[0062] The substrate 625, the electrical connector 629, the other electrical components 663, and part of the switch 631 in this case are disposed within a cavity formed by the housing 605. In order for a user to be able to access the switch 631, at

Luminex v. Signify
Luminex Exhibit 1007
Page 016

least part of the switch 631 can be disposed within and protrude through an aperture 675 in a wall (in this case, the top surface 606) of the housing 605. As an alternative, part of the switch 631 can protrude through an aperture in the side surface 607 of the housing 605. Permitting a user to access the switch 631 protruding through the aperture 675 in the housing 605 facilitates configuration of the luminaire 600 and avoids the need to open and/or disassemble the luminaire 600.

[0063] The example switch 631 can be used to select one or more of a number of variables that affect the operation of the luminaire 600. For example, the switch 631 can be used to select one of a number of CCTs. The switch 631 can be any of a number of types of switches, including but not limited to one or more DIP switches, one or more SIPP switches, one or more rocker switches, one or more reed switches, one or more magnetic switches, one or more rotary switches, one or more rotary dials, one or more selectors or selector switches, one or more slide switches (as shown in Figure 6C), one or more snap switches, one or more thumbwheels, one or more toggles or toggle switches, one or more keys or keypads, and one or more buttons or pushbuttons.

[0064] As mentioned above, the switch 631 of Figures 6A-6C is a slide switch. The switch 631 has a body 671 and a number of coupling features 672 (in this case, pins) disposed on the bottom of the body 671 that allow the switch 631 to become electrically coupled to an electrical connector 629 on the substrate 625 (and therefore also to one or more of the other components 663 mounted on the substrate 625, such as a controller, as described above). In some cases, adjacent to the coupling features 672 can be disposed one or more mechanical coupling features 679 (e.g., tabs, posts). In such a case, mechanical coupling features 679 can act as guides to properly position and align the coupling features 672 of the switch 631 relative to an electrical connector 629 mounted on the substrate 625. At the top end of the body 671 is an actuator 673 that extends outward from a plate 676. The plate 676 is disposed within the body 671 and has a length that is less than the length of the body 671. The plate 676 also corresponds to a slot 674 that traverses the top end of the body 671. The actuator 673 extends through the slot 674 and can be accessible by a user.

Luminex v. Signify
Luminex Exhibit 1007
Page 017

[0065] The switch 631 can include a number of detents and/or other features to limit or create discrete stopping locations for the actuator 673 (and so also the plate 676) along the length of the slot 674. Each of these detents and/or other features can be associated with a certain value of a variable that affects the operation of the luminaire 600. For example, if the switch 631 is used to select a CCT, the left end 681 of the slot 674 can be associated with 5000 K, detent 682 can be associated with 4000 K, detent 683 can be associated with 3500 K, detent 684 can be associated with 3000 K, and right end 685 of the slot 674 can be associated with 2700 K.

[0066] Example switches 631 can be used with a new luminaire 600. Alternatively example switches 631 can be retrofit into existing luminaires. Also, while Figures 6A-6C show that the switch 631 is disposed within and coupled to the housing 605, the switch 631 can alternatively be disposed within and/or coupled to some other portion (e.g., the trim 610) of the luminaire 600. In some cases, a luminaire can be manufactured without the switch, but with the ability to receive an example switch at a later time (e.g., during installation). For example, Figure 7 shows a luminaire 700 that is configured to receive a switch in accordance with certain example embodiments. Referring to Figures 1A-7, the luminaire 700 can be substantially the same as the luminaires discussed above, except as described below.

[0067] For example, the luminaire 700 of Figure 7 can include an housing 705 that is cylindrical in shape, having a top surface 706 and a side surface 707. Coupled to the bottom end of the housing 705 of Figure 7 can be a trim 710. Further, hanger clips 702 can be used to hold the luminaire 700 in place upon installation. In this case, the example switch is not coupled to the luminaire 700. Instead, there is a removable plug 789 disposed in the aperture 775 that traverses the top surface 706 of the housing 705. The removable plug 789 can be used to keep dust and other elements in the ambient environment from entering the cavity formed by the housing 705.

[0068] In such a case, when a user (e.g., an installer, an electrician, a homeowner) wants to install an example switch on the luminaire 700, the removable plug 789 can easily be removed (with or without a tool), and the example switch can be inserted into the connector inside the housing 705 that is subsequently exposed. Example switches can

be incorporated into any of a number of different types of luminaires (light fixtures). For example, as shown in Figures 6A-7, example switches can be used with down light fixtures. Other types of luminaires that can be used with example switches can include, but are not limited to, troffer lights, under cabinet lights, pendent lights, recessed lights, and wall scones,

[0069] Figure 8 shows a top-side perspective view of another luminaire 800 currently known in the art. Referring to Figures 1A-8, the luminaire 800 of Figure 8 in this case includes a housing 805 and a remotely located junction box 890. In this case, the luminaire 800 includes a surface-mounted light fixture, and so the housing 805 is low profile. The cover 826 of the housing 805 is visible in Figure 8. An electrical cable 827 extends through a wiring aperture 803 in the cover 826. The electrical cable 827 can include one or more electrical conductors to transfer power, control, communication, data, and/or any other type of electrical signals. One end of the electrical cable 827 is connected to one or more components (e.g., light sources) disposed on and/or within the housing 805 of the luminaire 800.

[0070] The junction box 890 includes one or more walls 891 to enclose one or more electrical components (e.g., a driver). An opposing end of the electrical cable 827 is coupled to one or more of those electrical components disposed in the junction box 890. In this way, the electrical cable 827 electrically couples one or more electrical components in the junction box 890 with one or more electrical components in or on the housing 805.

[0071] Figures 9A and 9B show another luminaire 900 that includes a switch 931 in accordance with certain example embodiments. Specifically, Figure 9A shows a cross-sectional side view of the luminaire 900, and Figure 9B shows a top-side-front perspective view of the luminaire 900. Referring to Figures 1A-9B, the luminaire 900 of Figures 9A and 9B is substantially the same as the luminaire 800 of Figure 8, except that the luminaire 900 of Figures 9A and 9B includes the example switch 931.

[0072] For example, the luminaire 900 of Figures 9A and 9B in this case includes a housing 905 and a remotely located junction box 990. In this case, the luminaire 900 includes a surface-mounted light fixture, and so the housing 905 is low profile. An

Luminex v. Signify
Luminex Exhibit 1007
Page 019

electrical cable 927 extends through a wiring aperture 903 in the cover 926. The electrical cable 927 can include one or more electrical conductors to transfer power, control, communication, data, and/or any other type of electrical signals. One end of the electrical cable 927 is connected to one or more components (e.g., light sources 950) disposed on and/or within the housing 905 of the luminaire 900.

[0073] In this case, the housing 905 is installed in a ceiling 995. The junction box 990 is located behind the ceiling and includes one or more walls 991 to enclose one or more electrical components (e.g., a driver). An opposing end of the electrical cable 927 is coupled to one or more of those electrical components disposed in the junction box 990. In this way, the electrical cable 927 electrically couples one or more electrical components in the junction box 990 with one or more electrical components in or on the housing 905. When the housing 905 is mounted in its installed location (in this case, the ceiling 995), the entire electrical cable 927 (and so also the switch 931) is behind the ceiling 995 and is inaccessible. Similarly, when the housing 905 is mounted in its installed location (e.g., the ceiling 995), the junction box 990 can be inaccessible. When the housing 905 is removed from its installed location, the junction box 990 and the electrical cable 927 (and so also the switch 931) can be accessible.

[0074] With the embodiments discussed previously, the example switch is located on the housing of the luminaire or within the housing of the luminaire. Here, the switch 931 is located outside of the housing 905 of the luminaire 900. Specifically, in this case, the switch 931 is in-line with the electrical cable 927. The switch 931 can be substantially the same as the example switches discussed above. For instance, the switch 931 can have one or more coupling features (e.g., terminal points) that are used to couple to one or more electrical conductors of one or more electrical cables 927. As another example, the switch 931 can have an actuator having multiple positions.

[0075] As yet another example, the switch 931 can be or include an inline pin switch, multiple DIP switches, one or more single in-line pin packages (SIP or SIPP), one or more rocker switches, one or more reed switches, one or more magnetic switches, one or more rotary switches, one or more rotary dials, one or more selectors or selector switches, one or more slide switches, one or more snap switches, one or more

Luminex v. Signify
Luminex Exhibit 1007
Page 020

thumbwheels, one or more toggles or toggle switches, one or more keys or keypads, or one or more buttons or pushbuttons.

[0076] The switch 931 can have a range of selections that are either continuous or discrete. As with the other switches described above, the switch 931 is used to adjust the CCT output by one or more of the light sources of the luminaire 900, and each selection of the switch 931 corresponds to a CCT within a range of CCTs. When the switch 931 is in-line with the electrical cable 927, as in this example, the switch 931 can be integrated with the electrical cable 927. Alternatively, there can be two electrical cables 927, where one electrical cable 927 is coupled to the one or more components inside the junction box 990 and one side of the switch 931, and the other electrical cable 927 is coupled to the one or more components inside or on the housing 905 and the other side of the switch 931. When the switch 931 is accessible (e.g., when the housing 905 is removed from its mounting location), the switch 931 can be replaced (e.g., without the use of tools) by a user.

[0077] Figure 10 shows yet another luminaire 1000 that includes a switch 1031 in accordance with certain example embodiments. Referring to Figures 1A-10, the luminaire 1000 of Figure 10 is substantially the same as the luminaire 900 of Figures 9A and 9B, except that the switch 1031 of the luminaire 1000 of Figure 10 is in a different location separate from the housing 1005.

[0078] For example, the luminaire 1000 of Figure 10 in this case includes a housing 1005 and a remotely located junction box 1090. In this case, the luminaire 800 includes a surface-mounted light fixture, and so the housing 805 is low profile. The cover 1026 of the housing 1005 is shown in Figure 10. An electrical cable 1027 extends through a wiring aperture 1003 in the cover 1026. The electrical cable 1027 can include one or more electrical conductors to transfer power, control, communication, data, and/or any other type of electrical signals. One end of the electrical cable 1027 is connected to one or more components (e.g., light sources) disposed on and/or within the housing 1005 of the luminaire 1000. When the housing 1005 is mounted in its installed location (e.g., a ceiling), the entire electrical cable 1027 can be inaccessible. When the housing 1005 is removed from its installed location, the electrical cable 1027 can be accessible.

[0079] The junction box 1090 includes one or more walls 1091 to enclose one or more electrical components (e.g., a driver, the switch 1031). In this case, one of the walls of the junction box 1090 is removed to show the switch 1031 disposed within the cavity 1092 formed by the walls 1091 of the junction box 1090. An opposing end of the electrical cable 1027 is coupled to one or more of those electrical components disposed in the junction box 1090. In this way, the electrical cable 1027 electrically couples one or more electrical components in the junction box 1090 with one or more electrical components in or on the housing 1005. In this case, the switch 1031 is disposed within the junction box 1031. When the housing 1005 is mounted in its installed location (e.g., a ceiling), the junction box 1090 (and so also the switch 1031) can be inaccessible. When the housing 1005 is removed from its installed location, the junction box 1090 (and so also the switch 1031) can be accessible.

[0080] The switch 1031 of Figure 10 can be substantially the same as the switch 931 described above with respect to Figures 9A and 9B. For example, the switch 1031 can have a range of selections that are either continuous or discrete. As with the other switches described above, the switch 1031 is used to adjust the CCT output by one or more of the light sources of the luminaire 1000, and each selection of the switch 1031 corresponds to a CCT within a range of CCTs. As an alternative to the embodiment shown in Figure 10, rather than being disposed within the cavity 1092 of the junction box 1090, the switch 1031 can be disposed on a wall 1091 of the junction box 1090 or remotely from the junction box 1090 as well as remotely from the housing 1005 of the luminaire 1000.

[0081] As will be appreciated by those of ordinary skill, the textual and illustrated disclosure provided herein supports a wide range of embodiments and implementations. In some non-limiting example embodiments of the disclosure, a luminaire can comprise: a housing; a substrate disposed in the housing; a first plurality of light emitting diodes that are mounted to the substrate and that have a first color temperature; a second plurality of light emitting diodes that are mounted to the substrate and that have a second color temperature; and a plurality of manual switches that are disposed at the housing for permanently configuring the luminaire to: provide illumination of the first color temperature by enabling the first plurality of light emitting diodes; provide illumination

Luminex v. Signify
Luminex Exhibit 1007
Page 022

of the second color temperature by enabling the second plurality of light emitting diodes; and provide illumination of a third color temperature that is between the first color temperature and the second color temperature by enabling the first plurality of light emitting diodes and the second plurality of light emitting diodes.

[0082] In some example embodiments of the luminaire, the housing can comprise an aperture that is configured for emitting area illumination, and the substrate is oriented to emit light through the aperture. In some example embodiments of the luminaire, the plurality of manual switches are mounted to the substrate. In some example embodiments of the luminaire, the plurality of manual switches are mounted in the housing. In some example embodiments of the luminaire, the plurality of manual switches are mounted to the housing. In some example embodiments of the luminaire, the plurality of manual switches comprise a dual inline pin (DIP) switch.

[0083] In some example embodiments of the luminaire, the plurality of manual switches provide two switch states, and each of the two switch states provides illumination of the third color temperature by enabling the first plurality of light emitting diodes and the second plurality of light emitting diodes. In some example embodiments of the luminaire, the housing is circular and comprises a lip configured for extending around an aperture in a ceiling. In some example embodiments of the luminaire, the housing comprises a wiring port disposed on a side of the housing. In some example embodiments of the luminaire, the housing comprises a light-emitting aperture in which the substrate is disposed.

[0084] In some example embodiments, the luminaire further comprises: an aperture disposed at a lower side of the housing; a lens disposed at the aperture for refracting light emitted by the first and second light emitting diodes; and a reflector that is disposed between the lens and the light emitting diodes and that is operative to reflect light between the first and second light emitting diodes and the lens. In some example embodiments of the luminaire, the housing is circular and comprises a lip configured for extending around an aperture in a ceiling. In some example embodiments of the luminaire, the housing comprises a wiring port disposed on a side of the housing. In some example embodiments of the luminaire, the housing forms a cavity associated with

Luminex v. Signify
Luminex Exhibit 1007
Page 023

the aperture. In some example embodiments of the luminaire, the first and second light source are mounted to a substrate that is disposed at an end of the cavity. In some example embodiments, the luminaire further comprises a reflector that is disposed in the cavity between the lens and the first and second light sources, the reflector operative to reflect light between the first and second light sources and the lens.

[0085] Technology for providing a configurable a luminaire has been described. Many modifications and other embodiments of the disclosures set forth herein will come to mind to one skilled in the art to which these disclosures pertain having the benefit of the teachings presented in the foregoing descriptions and the associated drawings. Therefore, it is to be understood that the disclosures are not to be limited to the specific embodiments disclosed and that modifications and other embodiments are intended to be included within the scope of this application. Although specific terms are employed herein, they are used in a generic and descriptive sense only and not for purposes of limitation.

Luminex v. Signify
Luminex Exhibit 1007
Page 024

Electronic Acknowledgement Receipt

EFS ID:	32962884
Application Number:	16014394
International Application Number:	
Confirmation Number:	1994
Title of Invention:	Configurable Lighting System
First Named Inventor/Applicant Name:	John Edward Bowen
Customer Number:	91764
Filer:	Timothy M. Smith
Filer Authorized By:	
Attorney Docket Number:	13682.227254
Receipt Date:	21-JUN-2018
Filing Date:	
Time Stamp:	14:24:35
Application Type:	Utility under 35 USC 111(a)

Payment information:

Submitted with Payment	yes
Payment Type	CARD
Payment was successfully received in RAM	$1720
RAM confirmation Number	062218INTEFSW14253700
Deposit Account	110980
Authorized User	Sally Sexton
The Director of the USPTO is hereby authorized to charge indicated fees and credit any overpayment as follows: 37 CFR 1.16 (National application filing, search, and examination fees) 37 CFR 1.17 (Patent application and reexamination processing fees)	

37 CFR 1.19 (Document supply fees)

37 CFR 1.20 (Post Issuance fees)

37 CFR 1.21 (Miscellaneous fees and charges)

File Listing:

Document Number	Document Description	File Name	File Size(Bytes)/ Message Digest	Multi Part /.zip	Pages (if appl.)
1		spec.pdf	159081 c8142ed3fdfb4613ab5930b20a3eb1ced67a4adf	yes	27
	Multipart Description/PDF files in .zip description				
	Document Description		**Start**	**End**	
	Specification		1	22	
	Claims		23	26	
	Abstract		27	27	
Warnings:					
Information:					
2	Drawings-only black and white line drawings	draw.pdf	1063157 035de57688d708ca8f1a63c3f83af559391add64	no	18
Warnings:					
Information:					
3	Oath or Declaration filed	dec.pdf	137224 f80637e8f57d8f9a23160400ea737c3d5cb417b9	no	2
Warnings:					
Information:					
4	Application Data Sheet	ads.pdf	1822799 1566998b29622ca70981432fcaaf274efcf7a7cc	no	8
Warnings:					
Information:					
5	Transmittal of New Application	transmittal.pdf	276030 7af250295618a34905e0a58c65e917329bff128f	no	2

Warnings:					
Information:					
6	Fee Worksheet (SB06)	fee-info.pdf	35108 8dddaf72d89d04cfa0b699d6a33be9b1b53366dc	no	2
Warnings:					
Information:					
		Total Files Size (in bytes):	3493399		

This Acknowledgement Receipt evidences receipt on the noted date by the USPTO of the indicated documents, characterized by the applicant, and including page counts, where applicable. It serves as evidence of receipt similar to a Post Card, as described in MPEP 503.

<u>New Applications Under 35 U.S.C. 111</u>
If a new application is being filed and the application includes the necessary components for a filing date (see 37 CFR 1.53(b)-(d) and MPEP 506), a Filing Receipt (37 CFR 1.54) will be issued in due course and the date shown on this Acknowledgement Receipt will establish the filing date of the application.
<u>National Stage of an International Application under 35 U.S.C. 371</u>
If a timely submission to enter the national stage of an international application is compliant with the conditions of 35 U.S.C. 371 and other applicable requirements a Form PCT/DO/EO/903 indicating acceptance of the application as a national stage submission under 35 U.S.C. 371 will be issued in addition to the Filing Receipt, in due course.
<u>New International Application Filed with the USPTO as a Receiving Office</u>
If a new international application is being filed and the international application includes the necessary components for an international filing date (see PCT Article 11 and MPEP 1810), a Notification of the International Application Number and of the International Filing Date (Form PCT/RO/105) will be issued in due course, subject to prescriptions concerning national security, and the date shown on this Acknowledgement Receipt will establish the international filing date of the application.

In re Application of: **John Edward Bowen** and **Raymond Janik**

As a below named inventor, I hereby declare that this declaration is directed to the application titled "**Configurable Lighting System**," the specification of which is being filed with the U.S. Patent and Trademark Office concurrently herewith or was previously filed.

The above-identified application was made or authorized to be made by me. I believe that I am the original inventor or an original joint inventor of a claimed invention in the application.

I hereby state that I have reviewed and understand the contents of the above-identified specification, including the claims, as amended by any amendment referred to above.

I understand that I have a duty of candor and good faith toward the Patent and Trademark Office, and I acknowledge the duty to disclose information which is material to the patentability of the claimed invention of the application in accordance with Title 37, Code of Federal Regulations, § 1.56.

AUTHORIZATION TO PERMIT ACCESS TO APPLICATION BY PARTICIPATING OFFICES

☒ If checked, the undersigned hereby grants the USPTO authority to provide the European Patent Office (EPO), the Japan Patent Office (JPO), and any other intellectual property offices in which a foreign application claiming priority to the above-identified application is filed access to the above-identified patent application. See 37 CFR 1.14(c) and (h). This box should not be checked if the applicant does not wish the EPO, JPO, or other intellectual property office in which a foreign application claiming priority to the above-identified application is filed to have access to the application.
In accordance with 37 CFR 1.14(h)(3), access will be provided to a copy of the application-as-filed with respect to: 1) the above-identified application, 2) any foreign application to which the above-identified application claims priority under 35 USC 119(a)-(d) if a copy of the foreign application that satisfies the certified copy requirement of 37 CFR 1.55 has been filed in the above-identified US application, and 3) any U.S. application from which benefit is sought in the above-identified application.
In accordance with 37 CFR 1.14(c), access may be provided to information concerning the date of filing the Authorization to Permit Access to Application by Participating Offices.

I hereby acknowledge that any willful false statement made in this declaration is punishable under 18 U.S.C. 1001 by fine or imprisonment of not more than five (5) years, or both.

POWER OF ATTORNEY: I hereby appoint the practitioners associated with **Customer Number 91764** to prosecute this application and to transact all business in the Patent and Trademark Office connected therewith.

Send correspondence to: **Customer Number 91764** Direct telephone calls to **(404) 572-4600**

Robert T. Neufeld, Esq.

Full name of first inventor: John Edward Bowen	
Inventor's signature	Date: 6/20/2018
Residence and Post Office Address: 30 High Street, Sharpsburg, Georgia 30277	

DMSLIBRARY01\32347745.v1

In re Application of: **John Edward Bowen** and **Raymond Janik**

As a below named inventor, I hereby declare that this declaration is directed to the application titled "**Configurable Lighting System**," the specification of which is being filed with the U.S. Patent and Trademark Office concurrently herewith or was previously filed..

The above-identified application was made or authorized to be made by me. I believe that I am the original inventor or an original joint inventor of a claimed invention in the application.

I hereby state that I have reviewed and understand the contents of the above-identified specification, including the claims, as amended by any amendment referred to above.

I understand that I have a duty of candor and good faith toward the Patent and Trademark Office, and I acknowledge the duty to disclose information which is material to the patentability of the claimed invention of the application in accordance with Title 37, Code of Federal Regulations, § 1.56.

AUTHORIZATION TO PERMIT ACCESS TO APPLICATION BY PARTICIPATING OFFICES

☒ If checked, the undersigned hereby grants the USPTO authority to provide the European Patent Office (EPO), the Japan Patent Office (JPO), and any other intellectual property offices in which a foreign application claiming priority to the above-identified application is filed access to the above-identified patent application. See 37 CFR 1.14(c) and (h). This box should not be checked if the applicant does not wish the EPO, JPO, or other intellectual property office in which a foreign application claiming priority to the above-identified application is filed to have access to the application.
In accordance with 37 CFR 1.14(h)(3), access will be provided to a copy of the application-as-filed with respect to: 1) the above-identified application, 2) any foreign application to which the above-identified application claims priority under 35 USC 119(a)-(d) if a copy of the foreign application that satisfies the certified copy requirement of 37 CFR 1.55 has been filed in the above-identified US application, and 3) any U.S. application from which benefit is sought in the above-identified application.
In accordance with 37 CFR 1.14(c), access may be provided to information concerning the date of filing the Authorization to Permit Access to Application by Participating Offices.

I hereby acknowledge that any willful false statement made in this declaration is punishable under 18 U.S.C. 1001 by fine or imprisonment of not more than five (5) years, or both.

POWER OF ATTORNEY: I hereby appoint the practitioners associated with **Customer Number 91764** to prosecute this application and to transact all business in the Patent and Trademark Office connected therewith.

Send correspondence to: **Customer Number 91764** Direct telephone calls to **(404) 572-4600**

Robert T. Neufeld, Esq.

Full name of second inventor: Raymond Janik	
Inventor's signature	Date: 6/20/2018
Residence and Post Office Address: 155 Cheshire Chase, Fayetteville, Georgia 30215	

DMSLIBRARY01\32347745.v1

CLAIMS

What is claimed is:

1. A luminaire comprising:

a housing comprising at least one outer surface that forms a first cavity;

at least one electrical component disposed, at least in part, within the first cavity;

an electrical cable comprising a first end and a second end, wherein the first end is coupled to the at least one electrical component; and

a switch coupled to the electrical cable, wherein the switch is disposed remotely from the housing, wherein the switch has a plurality of positions, wherein each position of the plurality of positions of the switch corresponds to a discrete correlated color temperature (CCT) output by one or more light sources of the luminaire.

2. The luminaire of Claim 1, wherein the switch is a dial.

3. The luminaire of Claim 1, wherein each position of the plurality of positions is discrete.

4. The luminaire of Claim 3, wherein the plurality of positions of the switch comprises a first position, a second position, a third position, a fourth position, and a fifth position.

5. The luminaire of Claim 4, wherein the first position of the switch corresponds to 2700 Kelvin (K) output by the one or more light sources, wherein the second position of the switch corresponds to 3000 K output by the one or more light sources, wherein the third position of the switch corresponds to 3500 K output by the one or more light sources, wherein the fourth position of the switch corresponds to 4000 K output by the one or more light sources, and wherein the fifth position of the switch corresponds to 5000 K output by the one or more light sources.

Luminex v. Signify
Luminex Exhibit 1007
Page 030

6. The luminaire of Claim 1, wherein the switch is integrated with the electrical cable.

7. The luminaire of Claim 1, further comprising:

a junction box comprising at least one wall that forms a second cavity, wherein the switch is disposed within the second cavity, wherein the second end of the electrical cable is coupled to the switch.

8. The luminaire of Claim 1, further comprising:

a junction box comprising at least one wall that forms a second cavity, wherein the second cavity has disposed therein at least one additional electrical component; and

an additional electrical cable,

wherein the switch is coupled to the second end of the electrical cable, wherein the additional electrical cable is coupled to the switch and to the at least one additional electrical component,

wherein the switch is disposed outside the second cavity.

9. The luminaire of Claim 1, wherein the switch is a slide switch.

10. The luminaire of Claim 1, wherein the switch is a rotary switch.

11. The luminaire of Claim 1, wherein the switch is inaccessible when the housing is installed.

12. The luminaire of Claim 1, wherein the switch is accessible to a user when the housing is removed from its installed location.

Luminex v. Signify
Luminex Exhibit 1007
Page 031

13. A switch for controlling a correlated color temperature (CCT) of light emitted by a luminaire, the switch comprising:

a body;

at least one first coupling feature disposed on the body, wherein the at least one first coupling feature is configured to electrically couple to an electrical cable of the luminaire; and

an actuator disposed on the body, wherein the actuator has a range of positions,

wherein each position of the range of positions of the actuator corresponds to a CCT of the light emitted by the luminaire.

14. The switch of Claim 13, wherein each position is continuous within the range of positions.

15. The switch of Claim 13, wherein each position is discrete within the range of positions.

16. The switch of Claim 15, wherein the range of positions comprises a first position, a second position, a third position, a fourth position, and a fifth position.

17. The switch of Claim 13, further comprising:

at least one second coupling feature disposed adjacent to the at least one first coupling feature, wherein the at least one second coupling feature is configured to electrically couple to an additional electrical cable of the luminaire.

18. The switch of Claim 13, wherein the body is configured to be integrated with the electrical cable.

Luminex v. Signify
Luminex Exhibit 1007
Page 032

19. The switch of Claim 13, wherein the body is configured to be disposed within a junction box.

20. The switch of Claim 13, wherein the switch is a rotary switch.

Luminex v. Signify
Luminex Exhibit 1007
Page 033

Under the Paperwork Reduction Act of 1995, no persons are required to respond to a collection of information unless it contains a valid OMB control number.

Application Data Sheet 37 CFR 1.76	Attorney Docket Number	13682.227276
	Application Number	
Title of Invention	Optical Devices For Providing Corridor Dual Wallwash	

The application data sheet is part of the provisional or nonprovisional application for which it is being submitted. The following form contains the bibliographic data arranged in a format specified by the United States Patent and Trademark Office as outlined in 37 CFR 1.76.
This document may be completed electronically and submitted to the Office in electronic format using the Electronic Filing System (EFS) or the document may be printed and included in a paper filed application.

Secrecy Order 37 CFR 5.2:

☐ Portions or all of the application associated with this Application Data Sheet may fall under a Secrecy Order pursuant to 37 CFR 5.2 (Paper filers only. Applications that fall under Secrecy Order may not be filed electronically.)

Inventor Information:

Inventor 1 Remove

Legal Name

Prefix	Given Name	Middle Name	Family Name	Suffix
	Orestes		Orbe	

Residence Information (Select One) ● US Residency Non US Residency Active US Military Service

City	Fairburn	State/Province	GA	Country of Residence	US

Mailing Address of Inventor:

Address 1	7950 Lester Road		
Address 2			
City	Fairburn	State/Province	GA
Postal Code	30213	Country i	US

All Inventors Must Be Listed - Additional Inventor Information blocks may be generated within this form by selecting the **Add** button. Add

Correspondence Information:

Enter either Customer Number or complete the Correspondence Information section below.
For further information see 37 CFR 1.33(a).

☐ **An Address is being provided for the correspondence Information of this application.**

Customer Number	91764		
Email Address	HOUPatentDocket@KSLAW.com	Add Email	Remove Email

Application Information:

Title of the Invention	Optical Devices For Providing Corridor Dual Wallwash		
Attorney Docket Number	13682.227276	Small Entity Status Claimed	☐
Application Type	Nonprovisional		
Subject Matter	Utility		
Total Number of Drawing Sheets (if any)	10	Suggested Figure for Publication (if any)	

Under the Paperwork Reduction Act of 1995, no persons are required to respond to a collection of information unless it contains a valid OMB control number.

Application Data Sheet 37 CFR 1.76	Attorney Docket Number	13682.227276
	Application Number	
Title of Invention	Optical Devices For Providing Corridor Dual Wallwash	

Filing By Reference:

Only complete this section when filing an application by reference under 35 U.S.C. 111(c) and 37 CFR 1.57(a). Do not complete this section if application papers including a specification and any drawings are being filed. Any domestic benefit or foreign priority information must be provided in the appropriate section(s) below (i.e., "Domestic Benefit/National Stage Information" and "Foreign Priority Information").

For the purposes of a filing date under 37 CFR 1.53(b), the description and any drawings of the present application are replaced by this reference to the previously filed application, subject to conditions and requirements of 37 CFR 1.57(a).

Application number of the previously filed application	Filing date (YYYY-MM-DD)	Intellectual Property Authority or Country

Publication Information:

☐ Request Early Publication (Fee required at time of Request 37 CFR 1.219)

☐ **Request Not to Publish.** I hereby request that the attached application not be published under 35 U.S.C. 122(b) and certify that the invention disclosed in the attached application **has not and will not** be the subject of an application filed in another country, or under a multilateral international agreement, that requires publication at eighteen months after filing.

Representative Information:

Representative information should be provided for all practitioners having a power of attorney in the application. Providing this information in the Application Data Sheet does not constitute a power of attorney in the application (see 37 CFR 1.32).
Either enter Customer Number or complete the Representative Name section below. If both sections are completed the customer Number will be used for the Representative Information during processing.

Please Select One:	● Customer Number	US Patent Practitioner	○ Limited Recognition (37 CFR 11.9)
Customer Number	91764		

Domestic Benefit/National Stage Information:

This section allows for the applicant to either claim benefit under 35 U.S.C. 119(e), 120, 121, 365(c), or 386(c) or indicate National Stage entry from a PCT application. Providing benefit claim information in the Application Data Sheet constitutes the specific reference required by 35 U.S.C. 119(e) or 120, and 37 CFR 1.78.
When referring to the current application, please leave the "Application Number" field blank.

Prior Application Status	Pending		Remove
Application Number	Continuity Type	Prior Application Number	Filing or 371(c) Date (YYYY-MM-DD)
	Claims benefit of provisional	62/523370	2017-06-22

Additional Domestic Benefit/National Stage Data may be generated within this form by selecting the **Add** button. Add

Under the Paperwork Reduction Act of 1995, no persons are required to respond to a collection of information unless it contains a valid OMB control number.

Application Data Sheet 37 CFR 1.76	Attorney Docket Number	13682.227276
	Application Number	
Title of Invention	Optical Devices For Providing Corridor Dual Wallwash	

Foreign Priority Information:

This section allows for the applicant to claim priority to a foreign application. Providing this information in the application data sheet constitutes the claim for priority as required by 35 U.S.C. 119(b) and 37 CFR 1.55. When priority is claimed to a foreign application that is eligible for retrieval under the priority document exchange program (PDX)[i] the information will be used by the Office to automatically attempt retrieval pursuant to 37 CFR 1.55(i)(1) and (2). Under the PDX program, applicant bears the ultimate responsibility for ensuring that a copy of the foreign application is received by the Office from the participating foreign intellectual property office, or a certified copy of the foreign priority application is filed, within the time period specified in 37 CFR 1.55(g)(1).

Remove

Application Number	Country[i]	Filing Date (YYYY-MM-DD)	Access Code[i] (if applicable)

Additional Foreign Priority Data may be generated within this form by selecting the **Add** button. Add

Statement under 37 CFR 1.55 or 1.78 for AIA (First Inventor to File) Transition Applications

☐ This application (1) claims priority to or the benefit of an application filed before March 16, 2013 and (2) also contains, or contained at any time, a claim to a claimed invention that has an effective filing date on or after March 16, 2013.
NOTE: By providing this statement under 37 CFR 1.55 or 1.78, this application, with a filing date on or after March 16, 2013, will be examined under the first inventor to file provisions of the AIA.

Application Data Sheet 37 CFR 1.76	Attorney Docket Number	13682.227276
	Application Number	
Title of Invention	Optical Devices For Providing Corridor Dual Wallwash	

Authorization or Opt-Out of Authorization to Permit Access:

When this Application Data Sheet is properly signed and filed with the application, applicant has provided written authority to permit a participating foreign intellectual property (IP) office access to the instant application-as-filed (see paragraph A in subsection 1 below) and the European Patent Office (EPO) access to any search results from the instant application (see paragraph B in subsection 1 below).

Should applicant choose not to provide an authorization identified in subsection 1 below, applicant **must opt-out** of the authorization by checking the corresponding box A or B or both in subsection 2 below.

NOTE: This section of the Application Data Sheet is **ONLY** reviewed and processed with the **INITIAL** filing of an application. After the initial filing of an application, an Application Data Sheet cannot be used to provide or rescind authorization for access by a foreign IP office(s). Instead, Form PTO/SB/39 or PTO/SB/69 must be used as appropriate.

1. Authorization to Permit Access by a Foreign Intellectual Property Office(s)

A. Priority Document Exchange (PDX) - Unless box A in subsection 2 (opt-out of authorization) is checked, the undersigned hereby **grants the USPTO authority** to provide the European Patent Office (EPO), the Japan Patent Office (JPO), the Korean Intellectual Property Office (KIPO), the State Intellectual Property Office of the People's Republic of China (SIPO), the World Intellectual Property Organization (WIPO), and any other foreign intellectual property office participating with the USPTO in a bilateral or multilateral priority document exchange agreement in which a foreign application claiming priority to the instant patent application is filed, access to: (1) the instant patent application-as-filed and its related bibliographic data, (2) any foreign or domestic application to which priority or benefit is claimed by the instant application and its related bibliographic data, and (3) the date of filing of this Authorization. See 37 CFR 1.14(h)(1).

B. Search Results from U.S. Application to EPO - Unless box B in subsection 2 (opt-out of authorization) is checked, the undersigned hereby **grants the USPTO authority** to provide the EPO access to the bibliographic data and search results from the instant patent application when a European patent application claiming priority to the instant patent application is filed. See 37 CFR 1.14(h)(2).

The applicant is reminded that the EPO's Rule 141(1) EPC (European Patent Convention) requires applicants to submit a copy of search results from the instant application without delay in a European patent application that claims priority to the instant application.

2. Opt-Out of Authorizations to Permit Access by a Foreign Intellectual Property Office(s)

☐ A. Applicant **DOES NOT** authorize the USPTO to permit a participating foreign IP office access to the instant application-as-filed. If this box is checked, the USPTO will not be providing a participating foreign IP office with any documents and information identified in subsection 1A above.

☐ B. Applicant **DOES NOT** authorize the USPTO to transmit to the EPO any search results from the instant patent application. If this box is checked, the USPTO will not be providing the EPO with search results from the instant application.

NOTE: Once the application has published or is otherwise publicly available, the USPTO may provide access to the application in accordance with 37 CFR 1.14.

Under the Paperwork Reduction Act of 1995, no persons are required to respond to a collection of information unless it contains a valid OMB control number.

Application Data Sheet 37 CFR 1.76	Attorney Docket Number	13682.227276
	Application Number	
Title of Invention	Optical Devices For Providing Corridor Dual Wallwash	

Applicant Information:

Providing assignment information in this section does not substitute for compliance with any requirement of part 3 of Title 37 of CFR to have an assignment recorded by the Office.

Applicant 1 Remove

If the applicant is the inventor (or the remaining joint inventor or inventors under 37 CFR 1.45), this section should not be completed. The information to be provided in this section is the name and address of the legal representative who is the applicant under 37 CFR 1.43; or the name and address of the assignee, person to whom the inventor is under an obligation to assign the invention, or person who otherwise shows sufficient proprietary interest in the matter who is the applicant under 37 CFR 1.46. If the applicant is an applicant under 37 CFR 1.46 (assignee, person to whom the inventor is obligated to assign, or person who otherwise shows sufficient proprietary interest) together with one or more joint inventors, then the joint inventor or inventors who are also the applicant should be identified in this section.

Clear

● Assignee	Legal Representative under 35 U.S.C. 117	Joint Inventor
Person to whom the inventor is obligated to assign.	Person who shows sufficient proprietary interest	

If applicant is the legal representative, indicate the authority to file the patent application, the inventor is:

Name of the Deceased or Legally Incapacitated Inventor:

If the Applicant is an Organization check here. ☒

Organization Name	Eaton Intelligent Power Limited		
Mailing Address Information For Applicant:			
Address 1	30 Pembroke Road		
Address 2			
City	4 Dublin	**State/Province**	
Country	IE	Postal Code	D04
Phone Number		Fax Number	
Email Address			

Additional Applicant Data may be generated within this form by selecting the Add button. Add

Assignee Information including Non-Applicant Assignee Information:

Providing assignment information in this section does not substitute for compliance with any requirement of part 3 of Title 37 of CFR to have an assignment recorded by the Office.

Under the Paperwork Reduction Act of 1995, no persons are required to respond to a collection of information unless it contains a valid OMB control number.

Application Data Sheet 37 CFR 1.76	Attorney Docket Number	13682.227276
	Application Number	
Title of Invention	Optical Devices For Providing Corridor Dual Wallwash	

Assignee 1

Complete this section if assignee information, including non-applicant assignee information, is desired to be included on the patent application publication. An assignee-applicant identified in the "Applicant Information" section will appear on the patent application publication as an applicant. For an assignee-applicant, complete this section only if identification as an assignee is also desired on the patent application publication.

Remove

If the Assignee or Non-Applicant Assignee is an Organization check here. ☐

Prefix	**Given Name**	Middle Name	**Family Name**	Suffix

Mailing Address Information For Assignee including Non-Applicant Assignee:

Address 1			
Address 2			
City		**State/Province**	
Country i		Postal Code	
Phone Number		Fax Number	
Email Address			

Additional Assignee or Non-Applicant Assignee Data may be generated within this form by selecting the Add button. Add

Signature:

Remove

NOTE: This Application Data Sheet must be signed in accordance with 37 CFR 1.33(b). **However, if this Application Data Sheet is submitted with the INITIAL filing of the application and either box A or B is not checked in subsection 2 of the "Authorization or Opt-Out of Authorization to Permit Access" section, then this form must also be signed in accordance with 37 CFR 1.14(c).**

This Application Data Sheet **must** be signed by a patent practitioner if one or more of the applicants is a **juristic entity** (e.g., corporation or association). If the applicant is two or more joint inventors, this form must be signed by a patent practitioner, **all** joint inventors who are the applicant, or one or more joint inventor-applicants who have been given power of attorney (e.g., see USPTO Form PTO/AIA/81) on behalf of **all** joint inventor-applicants.

See 37 CFR 1.4(d) for the manner of making signatures and certifications.

Signature	/Timothy Smith/			Date (YYYY-MM-DD)	2018-06-21
First Name	Timothy	Last Name	Smith	Registration Number	62052

Additional Signature may be generated within this form by selecting the Add button. Add

Application Data Sheet 37 CFR 1.76	Attorney Docket Number	13682.227276
	Application Number	
Title of Invention	Optical Devices For Providing Corridor Dual Wallwash	

This collection of information is required by 37 CFR 1.76. The information is required to obtain or retain a benefit by the public which is to file (and by the USPTO to process) an application. Confidentiality is governed by 35 U.S.C. 122 and 37 CFR 1.14. This collection is estimated to take 23 minutes to complete, including gathering, preparing, and submitting the completed application data sheet form to the USPTO. Time will vary depending upon the individual case. Any comments on the amount of time you require to complete this form and/or suggestions for reducing this burden, should be sent to the Chief Information Officer, U.S. Patent and Trademark Office, U.S. Department of Commerce, P.O. Box 1450, Alexandria, VA 22313-1450. DO NOT SEND FEES OR COMPLETED FORMS TO THIS ADDRESS. **SEND TO: Commissioner for Patents, P.O. Box 1450, Alexandria, VA 22313-1450.**

Luminex v. Signify
Luminex Exhibit 1007
Page 040

Privacy Act Statement

The Privacy Act of 1974 (P.L. 93-579) requires that you be given certain information in connection with your submission of the attached form related to a patent application or patent. Accordingly, pursuant to the requirements of the Act, please be advised that: (1) the general authority for the collection of this information is 35 U.S.C. 2(b)(2); (2) furnishing of the information solicited is voluntary; and (3) the principal purpose for which the information is used by the U.S. Patent and Trademark Office is to process and/or examine your submission related to a patent application or patent. If you do not furnish the requested information, the U.S. Patent and Trademark Office may not be able to process and/or examine your submission, which may result in termination of proceedings or abandonment of the application or expiration of the patent.

The information provided by you in this form will be subject to the following routine uses:

1 The information on this form will be treated confidentially to the extent allowed under the Freedom of Information Act (5 U.S.C. 552) and the Privacy Act (5 U.S.C. 552a). Records from this system of records may be disclosed to the Department of Justice to determine whether the Freedom of Information Act requires disclosure of these records.

2. A record from this system of records may be disclosed, as a routine use, in the course of presenting evidence to a court, magistrate, or administrative tribunal, including disclosures to opposing counsel in the course of settlement negotiations.

3 A record in this system of records may be disclosed, as a routine use, to a Member of Congress submitting a request involving an individual, to whom the record pertains, when the individual has requested assistance from the Member with respect to the subject matter of the record.

4. A record in this system of records may be disclosed, as a routine use, to a contractor of the Agency having need for the information in order to perform a contract. Recipients of information shall be required to comply with the requirements of the Privacy Act of 1974, as amended, pursuant to 5 U.S.C. 552a(m).

5. A record related to an International Application filed under the Patent Cooperation Treaty in this system of records may be disclosed, as a routine use, to the International Bureau of the World Intellectual Property Organization, pursuant to the Patent CooperationTreaty.

6. A record in this system of records may be disclosed, as a routine use, to another federal agency for purposes of National Security review (35 U.S.C. 181) and for review pursuant to the Atomic Energy Act (42 U.S.C. 218(c)).

7. A record from this system of records may be disclosed, as a routine use, to the Administrator, General Services, or his/her designee, during an inspection of records conducted by GSA as part of that agency's responsibility to recommend improvements in records management practices and programs, under authority of 44 U.S.C. 2904 and 2906. Such disclosure shall be made in accordance with the GSA regulations governing inspection of records for this purpose, and any other relevant (i.e., GSA or Commerce) directive. Such disclosure shall not be used to make determinations about individuals.

8. A record from this system of records may be disclosed, as a routine use, to the public after either publication of the application pursuant to 35 U.S.C. 122(b) or issuance of a patent pursuant to 35 U.S.C. 151. Further, a record may be disclosed, subject to the limitations of 37 CFR 1.14, as a routine use, to the public if the record was filed in an application which became abandoned or in which the proceedings were terminated and which application is referenced by either a published application, an application open to public inspections or an issued patent.

9. A record from this system of records may be disclosed, as a routine use, to a Federal, State, or local law enforcement agency, if the USPTO becomes aware of a violation or potential violation of law or regulation.

PTO/AIA/15 (03-13)
Approved for use through 01/31/2014. OMB 0651-0032
U.S. Patent and Trademark Office; U.S. DEPARTMENT OF COMMERCE
Under the Paperwork Reduction Act of 1995 no persons are required to respond to a collection of information unless it displays a valid OMB control number

UTILITY PATENT APPLICATION TRANSMITTAL

(Only for new nonprovisional applications under 37 CFR 1.53(b))

Attorney Docket No.	13682.227254
First Named Inventor	John Edward Bowen
Title	Configurable Lighting System
Express Mail Label No.	

APPLICATION ELEMENTS

See MPEP chapter 600 concerning utility patent application contents.

1. ☐ **Fee Transmittal Form** (PTO/SB/17 or equivalent)
2. ☐ **Applicant asserts small entity status.** See 37 CFR 1.27
3. ☐ **Applicant certifies micro entity status.** See 37 CFR 1.29. Applicant must attach form PTO/SB/15A or B or equivalent.
4. ☑ **Specification** [*Total Pages* 27] Both the claims and abstract must start on a new page. *(See MPEP § 608.01(a) for information on the preferred arrangement)*
5. ☑ **Drawing(s)** (35 U.S.C. 113) [*Total Sheets* 18]
6. **Inventor's Oath or Declaration** [*Total Pages* 2] *(including substitute statements under 37 CFR 1.64 and assignments serving as an oath or declaration under 37 CFR 1.63(e))*
   a. ☑ Newly executed (original or copy)
   b. ☐ A copy from a prior application (37 CFR 1.63(d))
7. ☑ **Application Data Sheet** ** See note below.* See 37 CFR 1.76 (PTO/AIA/14 or equivalent)
8. **CD-ROM or CD-R** in duplicate, large table, or Computer Program (*Appendix*)
   ☐ Landscape Table on CD
9. **Nucleotide and/or Amino Acid Sequence Submission** (*if applicable, items a. – c. are required*)
   a. ☐ Computer Readable Form (CRF)
   b. ☐ Specification Sequence Listing on:
      i. ☐ CD-ROM or CD-R (2 copies); or
      ii. ☐ Paper
   c. ☐ Statements verifying identity of above copies

ADDRESS TO: **Commissioner for Patents**
P.O. Box 1450
Alexandria, VA 22313-1450

ACCOMPANYING APPLICATION PAPERS

10. ☐ **Assignment Papers** (cover sheet & document(s))
    Name of Assignee _____
11. ☐ **37 CFR 3.73(c) Statement** (*when there is an assignee*) ☐ **Power of Attorney**
12. ☐ **English Translation Document** (*if applicable*)
13. ☐ **Information Disclosure Statement** (PTO/SB/08 or PTO-1449)
    ☐ Copies of citations attached
14. ☐ **Preliminary Amendment**
15. ☐ **Return Receipt Postcard** (*MPEP § 503*) (*Should be specifically itemized*)
16. ☐ **Certified Copy of Priority Document(s)** (*if foreign priority is claimed*)
17. ☐ **Nonpublication Request** Under 35 U.S.C. 122(b)(2)(B)(i). Applicant must attach form PTO/SB/35 or equivalent.
18. ☐ **Other:** _____

***Note**: (1) Benefit claims under 37 CFR 1.78 and foreign priority claims under 1.55 **must** be included in an Application Data Sheet (ADS).
(2) For applications filed under 35 U.S.C. 111, the application must contain an ADS specifying the applicant if the applicant is an assignee, person to whom the inventor is under an obligation to assign, or person who otherwise shows sufficient proprietary interest in the matter. See 37 CFR 1.46(b).

19. CORRESPONDENCE ADDRESS

☑ The address associated with Customer Number: 91764 **OR** ☐ Correspondence address below

Name					
Address					
City		State		Zip Code	
Country		Telephone		Email	

Signature	/Timothy Smith/	Date	06-21-2018
Name (Print/Type)	Timothy Smith	Registration No. (Attorney/Agent)	62052

This collection of information is required by 37 CFR 1.53(b). The information is required to obtain or retain a benefit by the public which is to file (and by the USPTO to process) an application. Confidentiality is governed by 35 U.S.C. 122 and 37 CFR 1.11 and 1.14. This collection is estimated to take 12 minutes to complete, including gathering, preparing, and submitting the completed application form to the USPTO. Time will vary depending upon the individual case. Any comments on the amount of time you require to complete this form and/or suggestions for reducing this burden, should be sent to the Chief Information Officer, U.S. Patent and Trademark Office, U.S. Department of Commerce, P.O. Box 1450, Alexandria, VA 22313-1450. DO NOT SEND FEES OR COMPLETED FORMS TO THIS ADDRESS. **SEND TO: Commissioner for Patents, P.O. Box 1450, Alexandria, VA 22313-1450.**
If you need assistance in completing the form, call 1-800-PTO-9199 and select option 2.

Privacy Act Statement

The **Privacy Act of 1974 (P.L. 93-579)** requires that you be given certain information in connection with your submission of the attached form related to a patent application or patent. Accordingly, pursuant to the requirements of the Act, please be advised that: (1) the general authority for the collection of this information is 35 U.S.C. 2(b)(2); (2) furnishing of the information solicited is voluntary; and (3) the principal purpose for which the information is used by the U.S. Patent and Trademark Office is to process and/or examine your submission related to a patent application or patent. If you do not furnish the requested information, the U.S. Patent and Trademark Office may not be able to process and/or examine your submission, which may result in termination of proceedings or abandonment of the application or expiration of the patent.

The information provided by you in this form will be subject to the following routine uses:

1. The information on this form will be treated confidentially to the extent allowed under the Freedom of Information Act (5 U.S.C. 552) and the Privacy Act (5 U.S.C 552a). Records from this system of records may be disclosed to the Department of Justice to determine whether disclosure of these records is required by the Freedom of Information Act.
2. A record from this system of records may be disclosed, as a routine use, in the course of presenting evidence to a court, magistrate, or administrative tribunal, including disclosures to opposing counsel in the course of settlement negotiations.
3. A record in this system of records may be disclosed, as a routine use, to a Member of Congress submitting a request involving an individual, to whom the record pertains, when the individual has requested assistance from the Member with respect to the subject matter of the record.
4. A record in this system of records may be disclosed, as a routine use, to a contractor of the Agency having need for the information in order to perform a contract. Recipients of information shall be required to comply with the requirements of the Privacy Act of 1974, as amended, pursuant to 5 U.S.C. 552a(m).
5. A record related to an International Application filed under the Patent Cooperation Treaty in this system of records may be disclosed, as a routine use, to the International Bureau of the World Intellectual Property Organization, pursuant to the Patent Cooperation Treaty.
6. A record in this system of records may be disclosed, as a routine use, to another federal agency for purposes of National Security review (35 U.S.C. 181) and for review pursuant to the Atomic Energy Act (42 U.S.C. 218(c)).
7. A record from this system of records may be disclosed, as a routine use, to the Administrator, General Services, or his/her designee, during an inspection of records conducted by GSA as part of that agency's responsibility to recommend improvements in records management practices and programs, under authority of 44 U.S.C. 2904 and 2906. Such disclosure shall be made in accordance with the GSA regulations governing inspection of records for this purpose, and any other relevant (*i.e.*, GSA or Commerce) directive. Such disclosure shall not be used to make determinations about individuals.
8. A record from this system of records may be disclosed, as a routine use, to the public after either publication of the application pursuant to 35 U.S.C. 122(b) or issuance of a patent pursuant to 35 U.S.C. 151. Further, a record may be disclosed, subject to the limitations of 37 CFR 1.14, as a routine use, to the public if the record was filed in an application which became abandoned or in which the proceedings were terminated and which application is referenced by either a published application, an application open to public inspection or an issued patent.
9. A record from this system of records may be disclosed, as a routine use, to a Federal, State, or local law enforcement agency, if the USPTO becomes aware of a violation or potential violation of law or regulation.

ABSTRACT

A luminaire can include a housing having at least one outer surface that forms a cavity. The luminaire can also include at least one electrical component disposed, at least in part, within the cavity. The luminaire can further include an electrical cable having a first end and a second end, where the first end is coupled to the at least one electrical component. The luminaire can also include a switch coupled to the electrical cable, where the switch is disposed remotely from the housing, where the switch has multiple positions, wherein each position of the switch corresponds to a discrete correlated color temperature (CCT) output by one or more light sources of the luminaire.

Attorney Docket No. 13682.227254 (18-HLD-218 US)

Luminex v. Signify
Luminex Exhibit 1007
Page 044

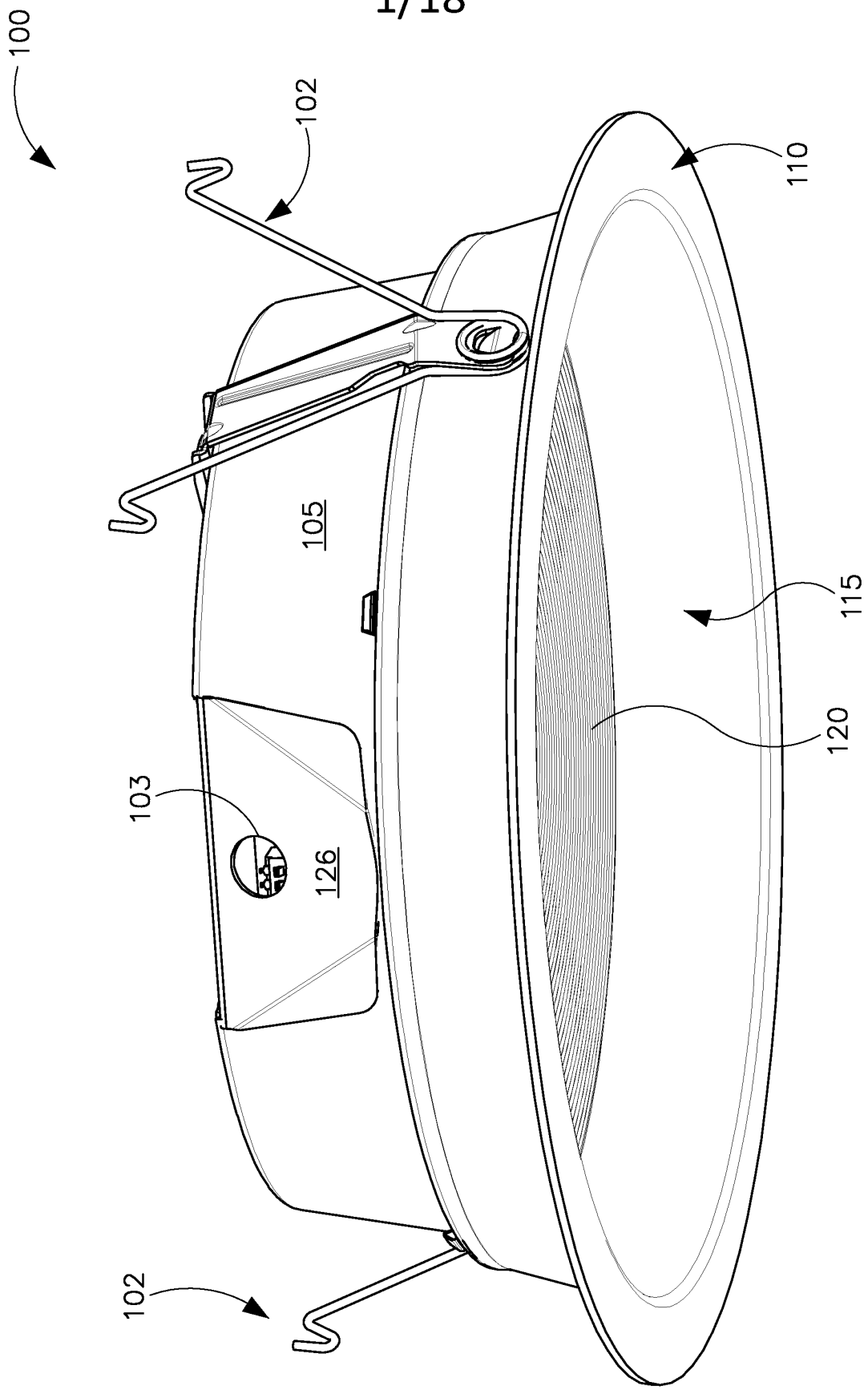

FIG. 1A

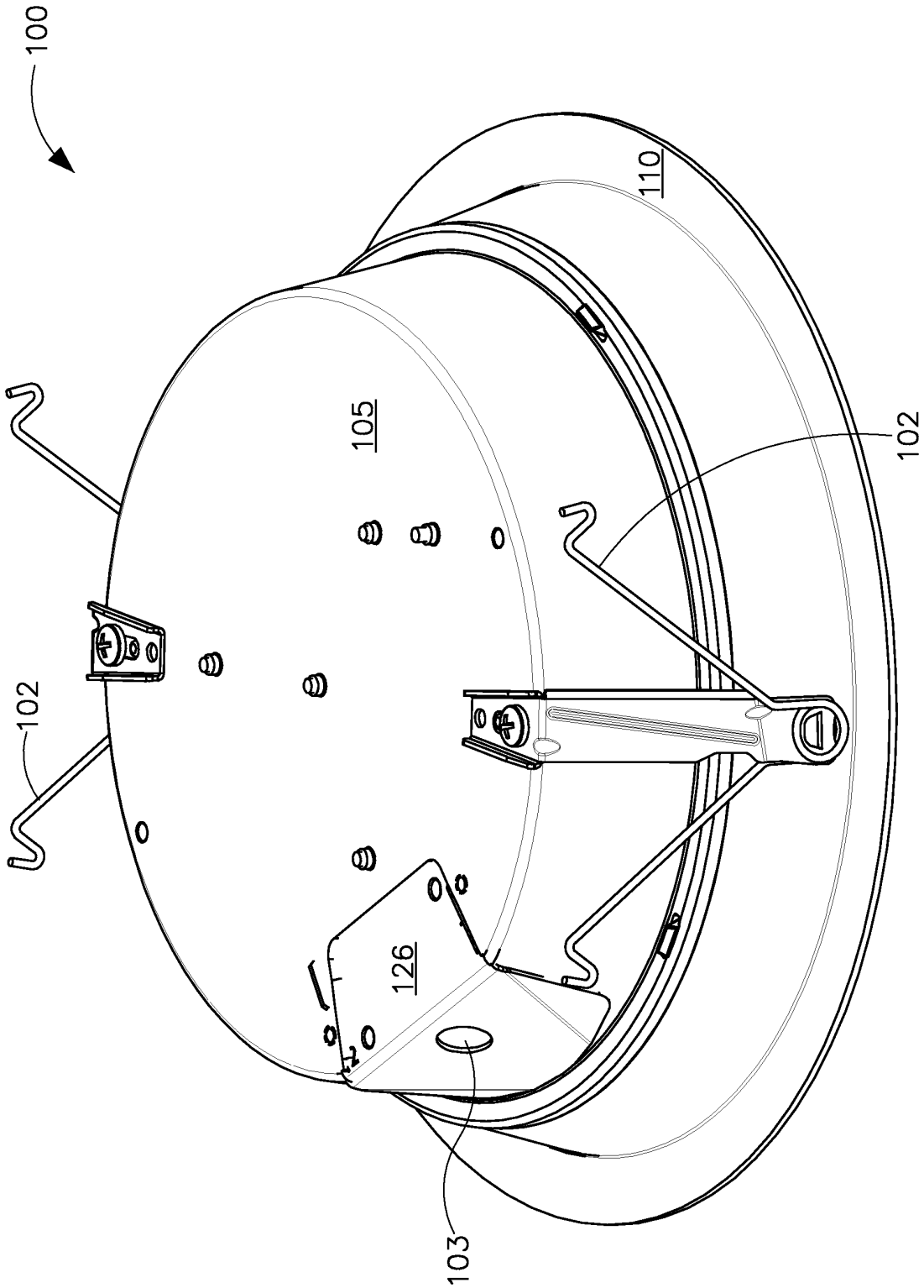

FIG. 1B

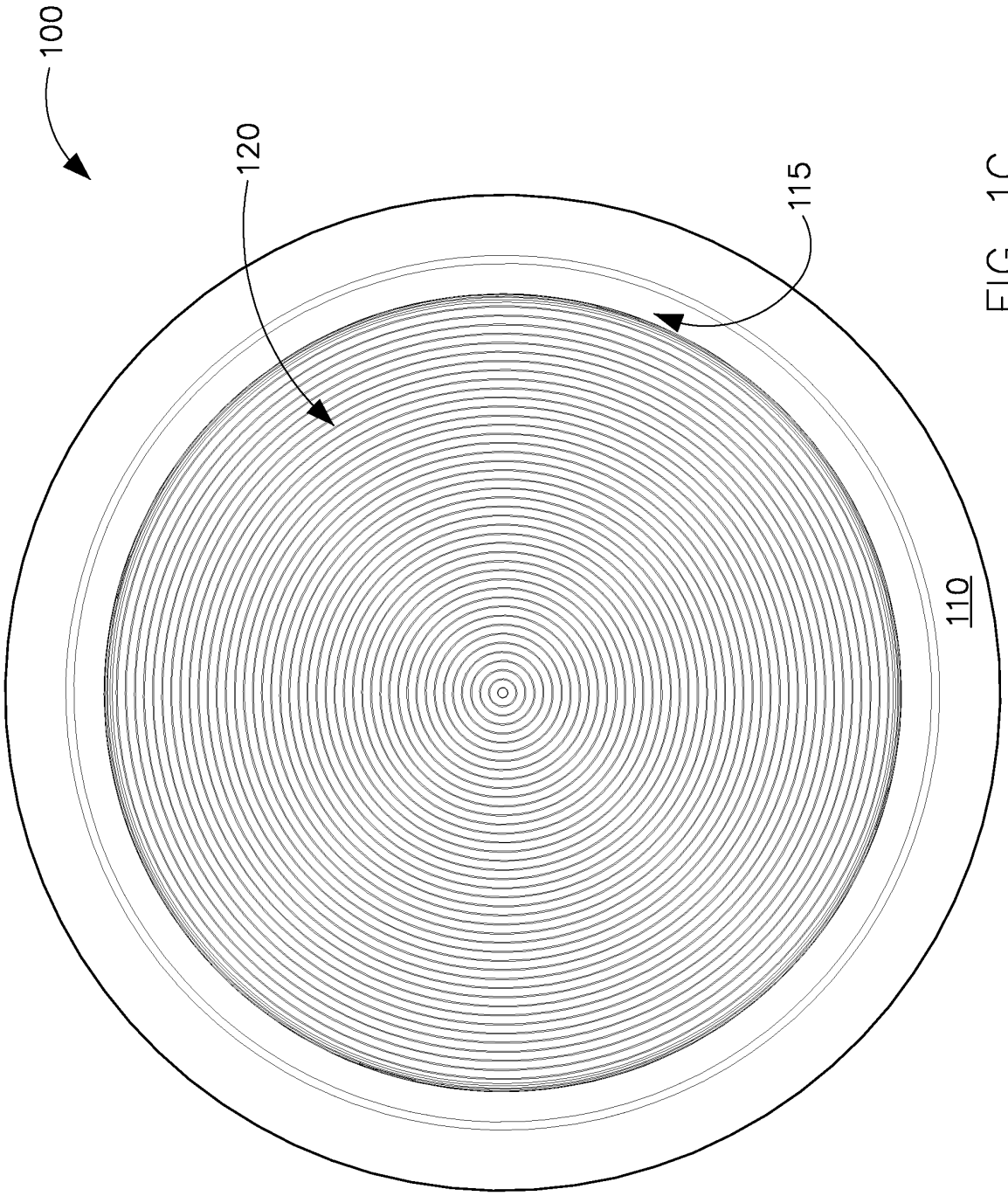

FIG. 1C

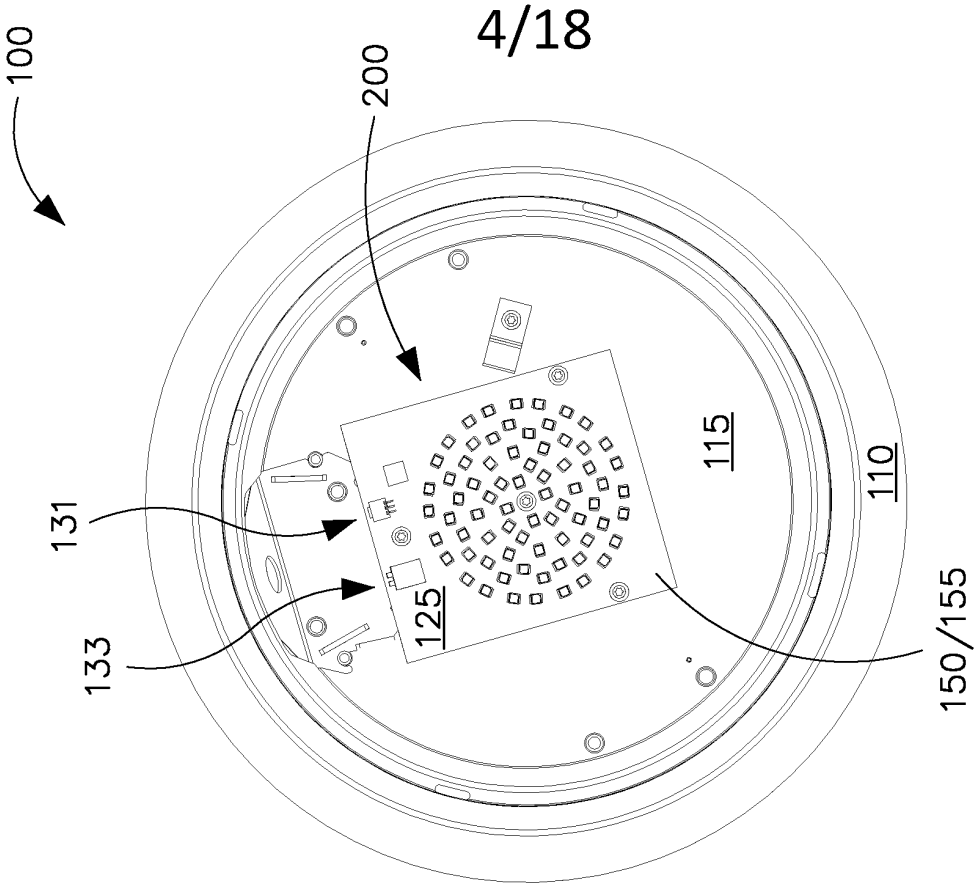

FIG. 1E

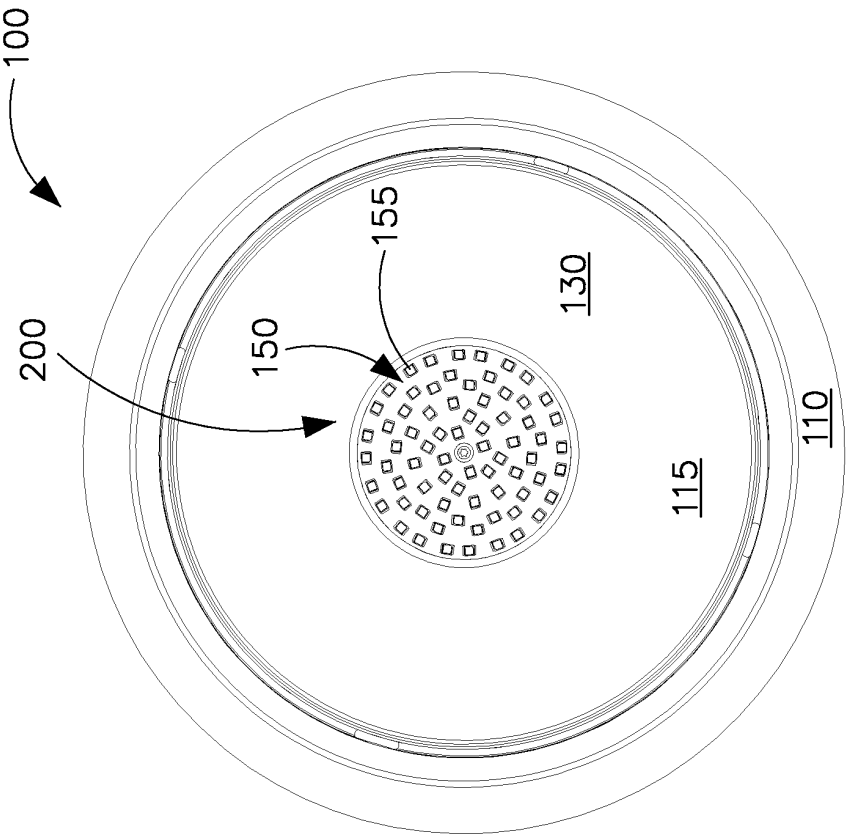

FIG. 1D

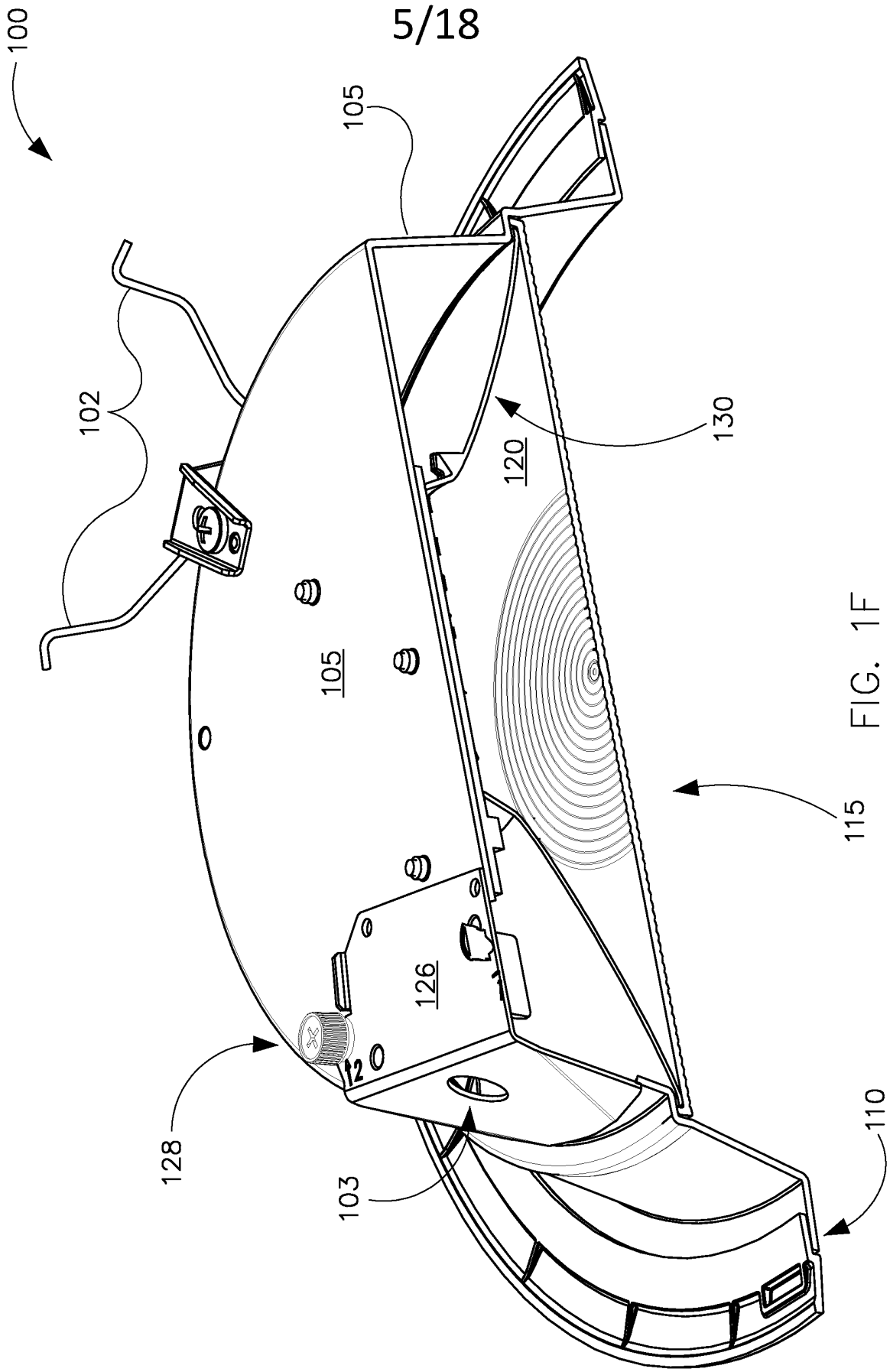

FIG. 1F

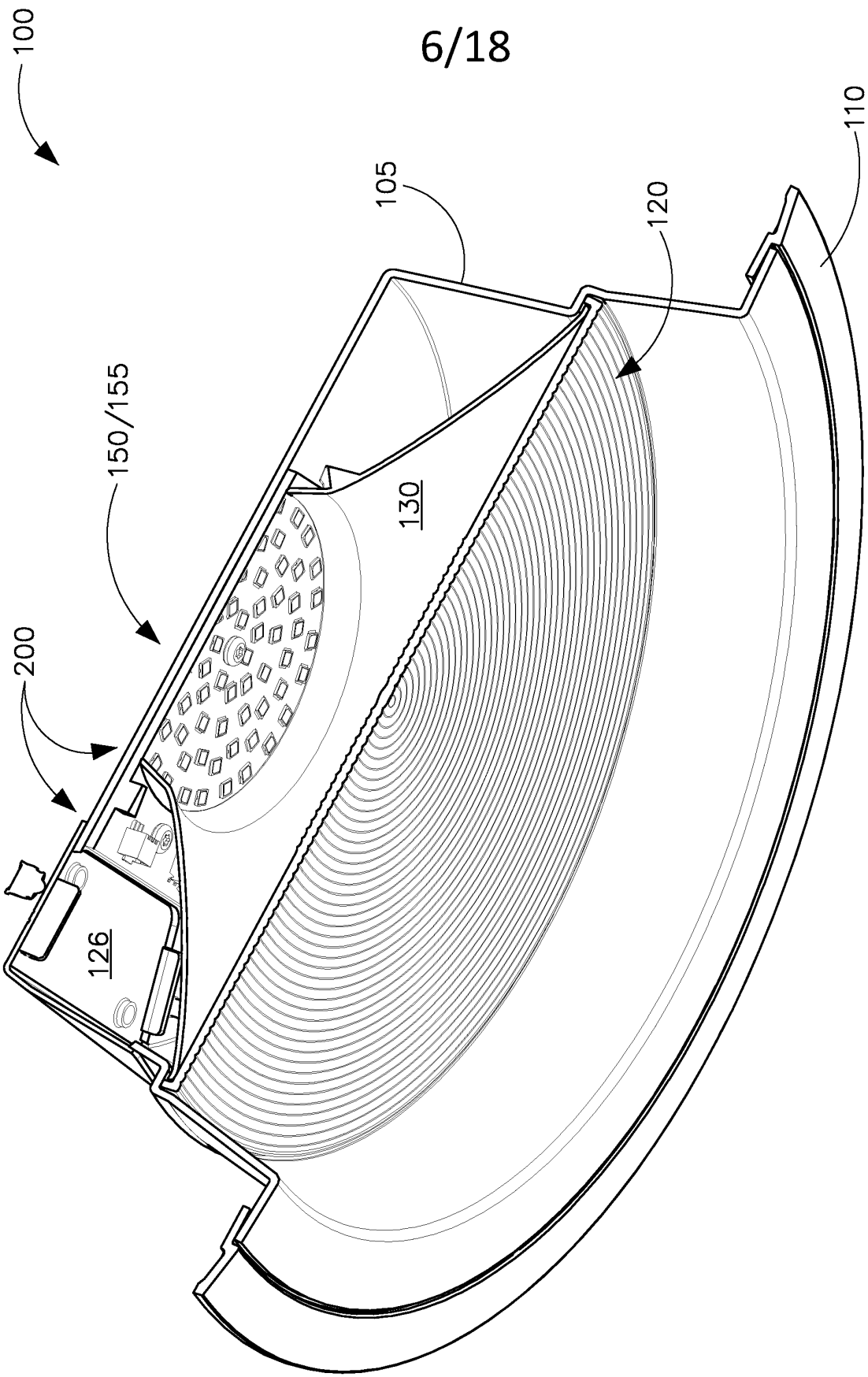

FIG. 1G

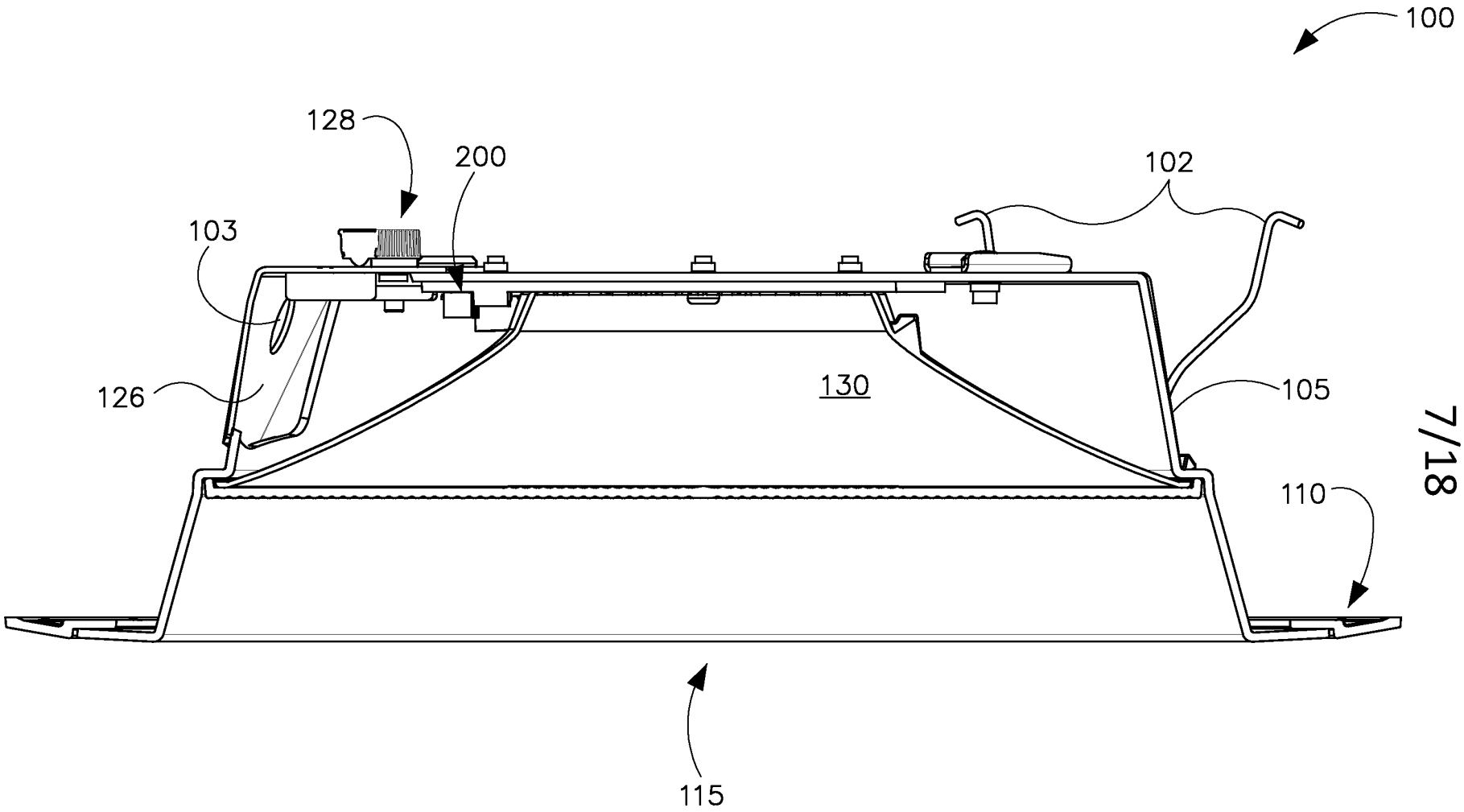

FIG. 1H

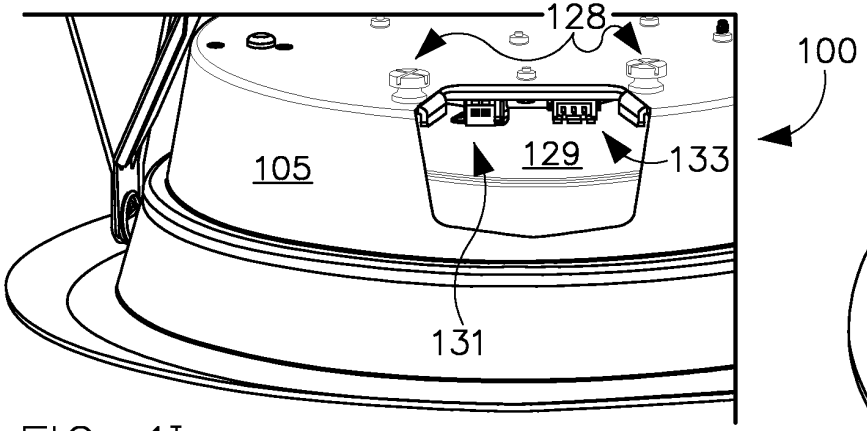

FIG. 1I

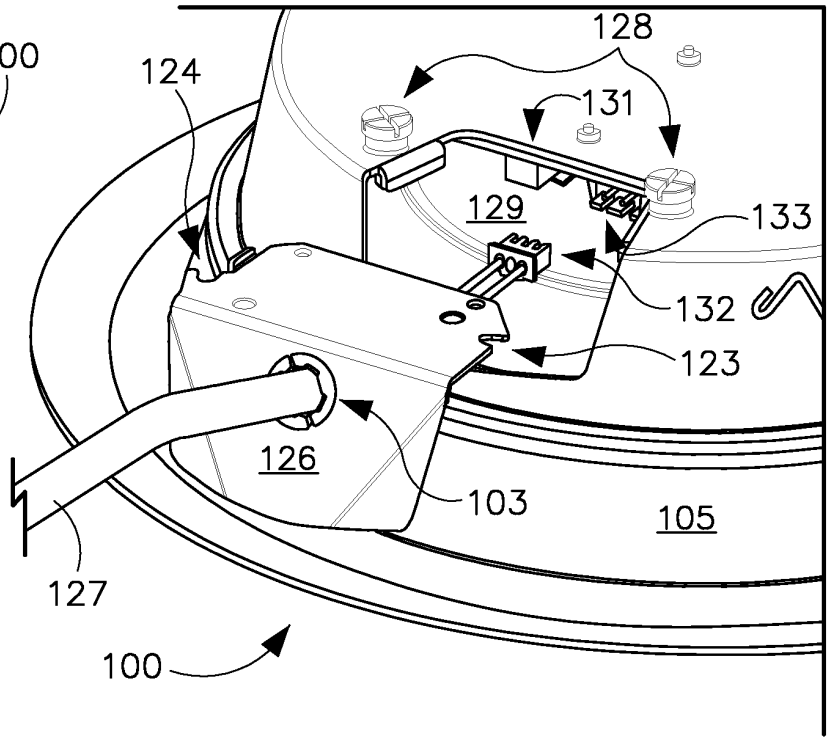

FIG. 1J

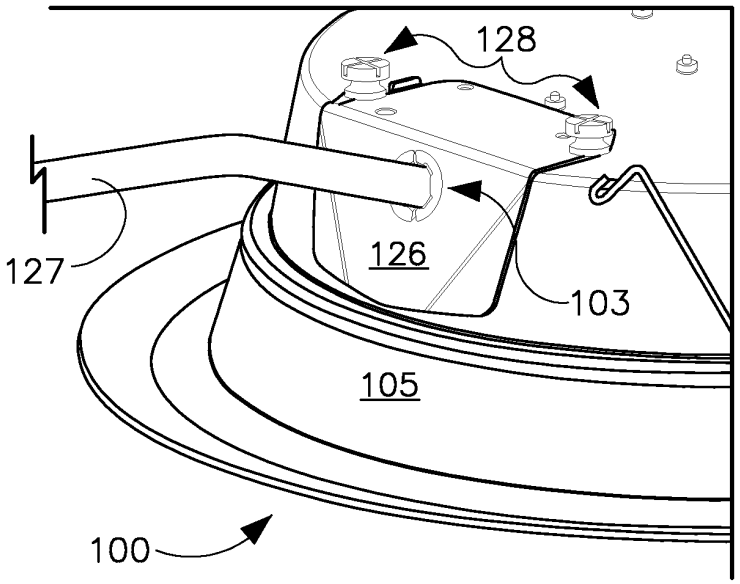

FIG. 1K

FIG. 2

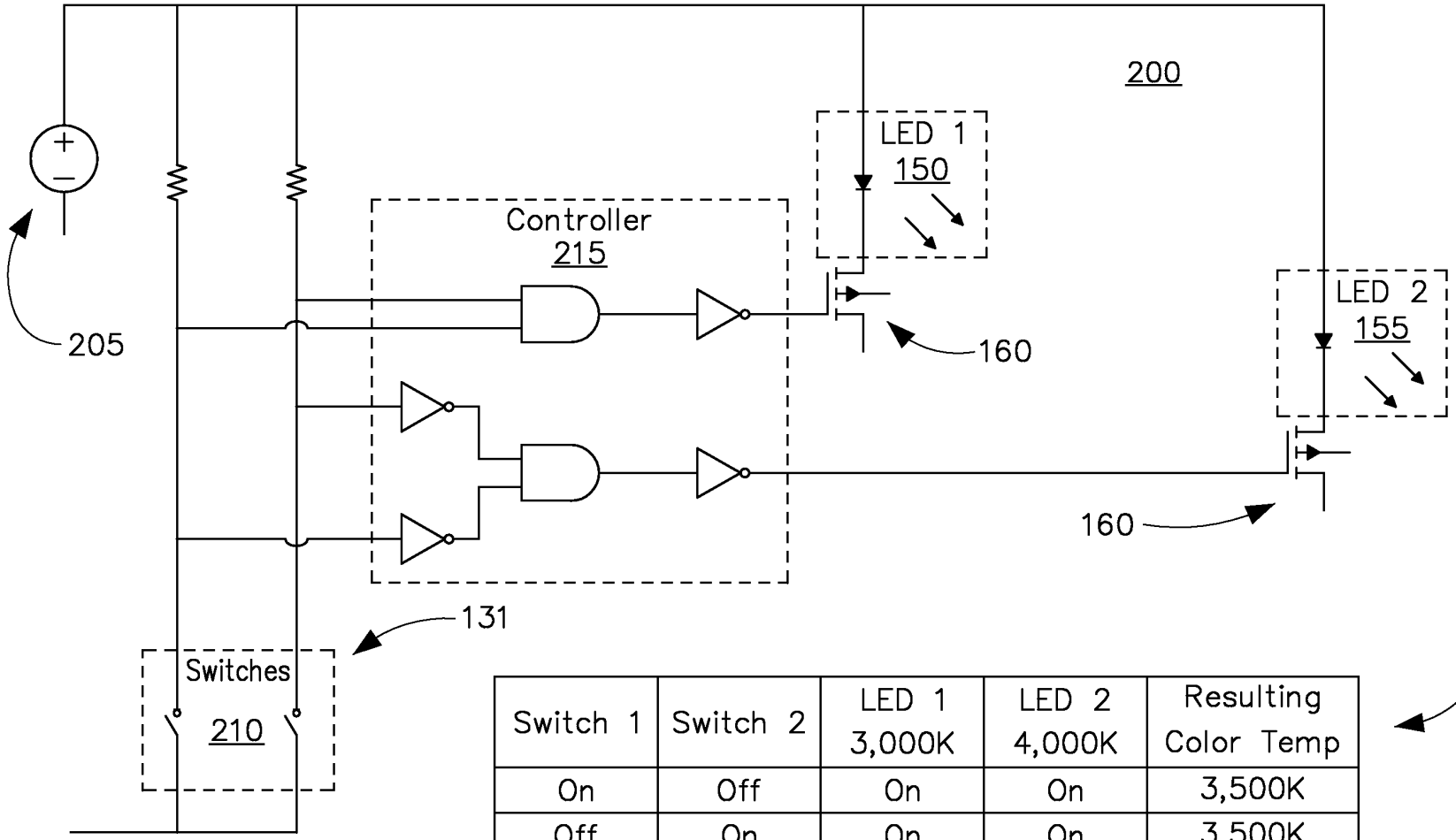

300

Switch 1	Switch 2	LED 1 3,000K	LED 2 4,000K	Resulting Color Temp
On	Off	On	On	3,500K
Off	On	On	On	3,500K
On	On	On	Off	3,000K
Off	Off	Off	On	4,000K

FIG. 3

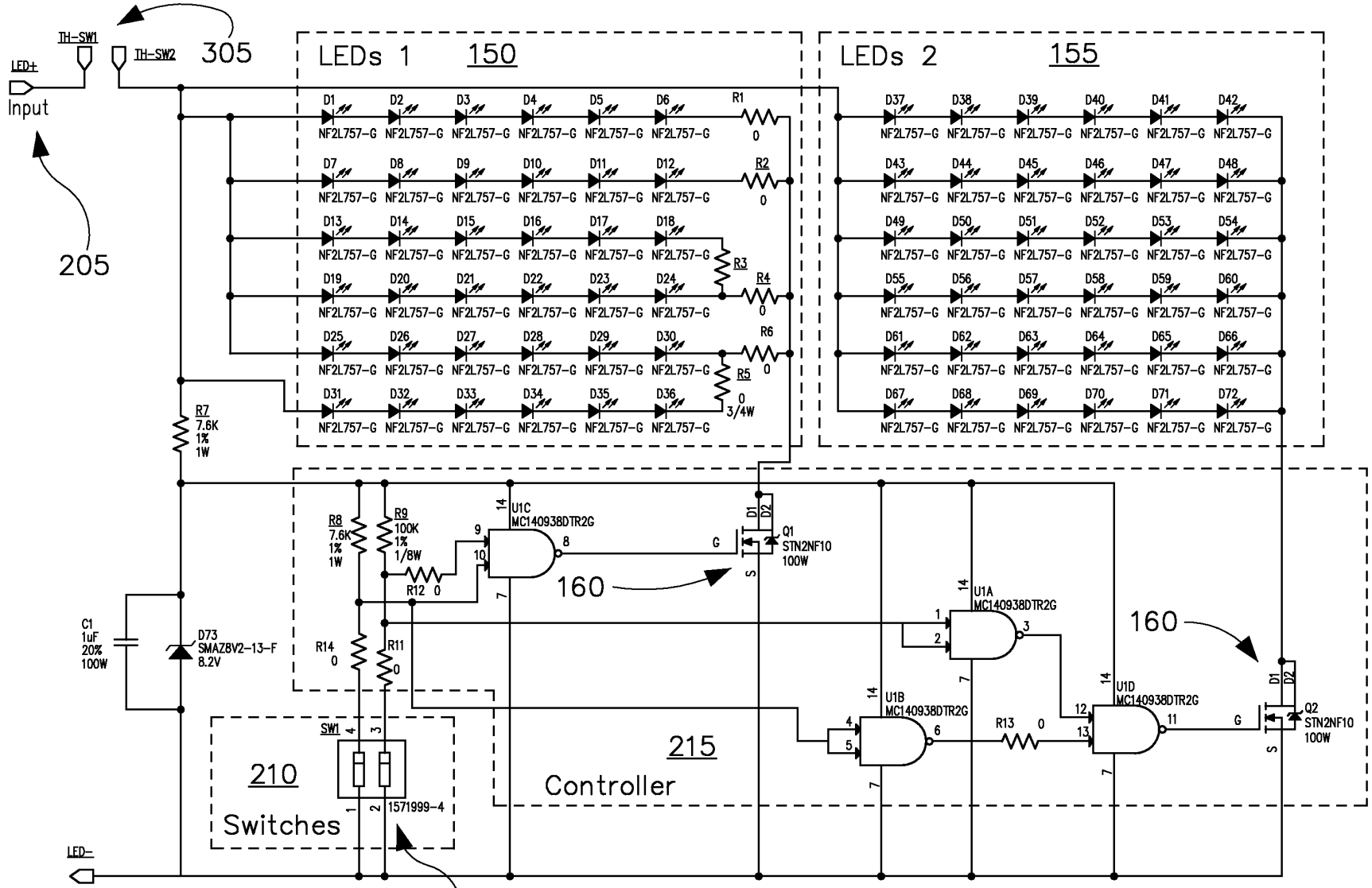
LED+
Input
TH-SW1
TH-SW2
305
205
LEDs 1
150
LEDs 2
155
NF2L757-G
R1
R2
R3
R4
R5
R6
R7
7.6K
1%
1W
R8
7.6K
1%
1W
R9
100K
1%
1/8W
R12
R14
R11
C1
1uF
20%
100W
D73
SMAZ8V2-13-F
8.2V
U1C
MC140938DTR2G
Q1
STN2NF10
100W
160
U1A
MC140938DTR2G
U1B
MC140938DTR2G
U1D
MC140938DTR2G
R13
Q2
STN2NF10
100W
SW1
1571999-4
210
Switches
215
Controller
LED-
131
200

FIG. 4

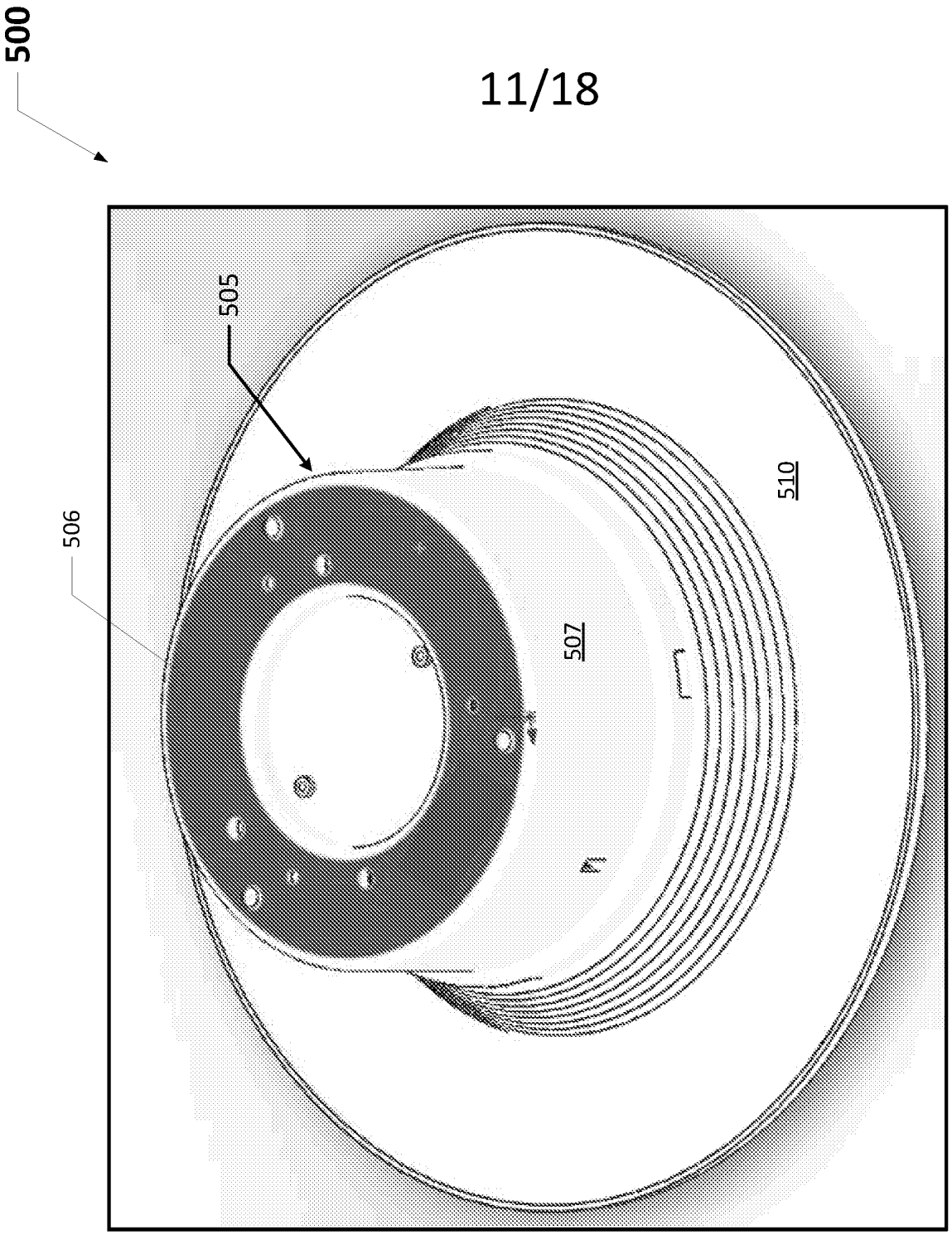

FIG. 5
(PRIOR ART)

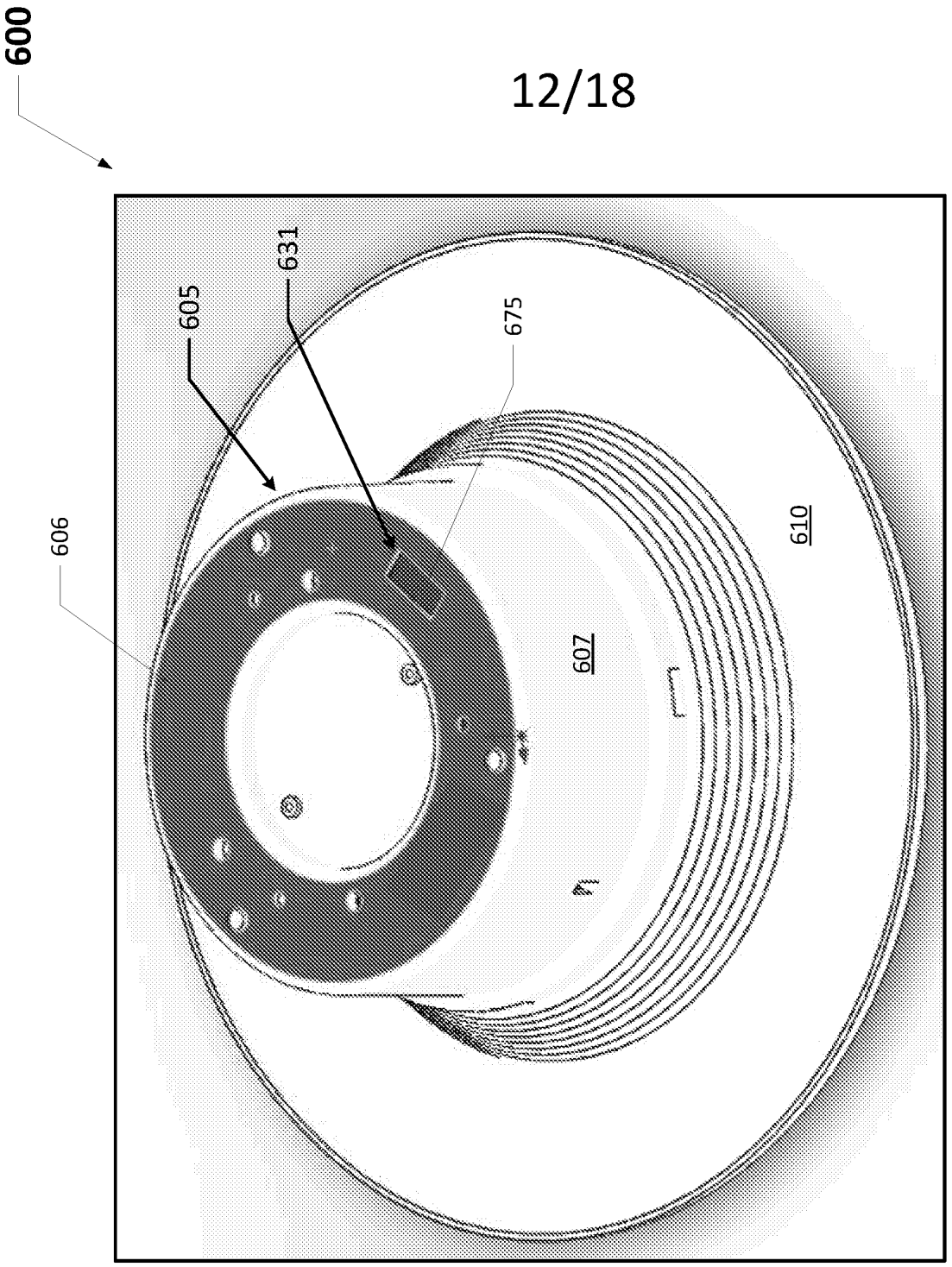

FIG. 6A

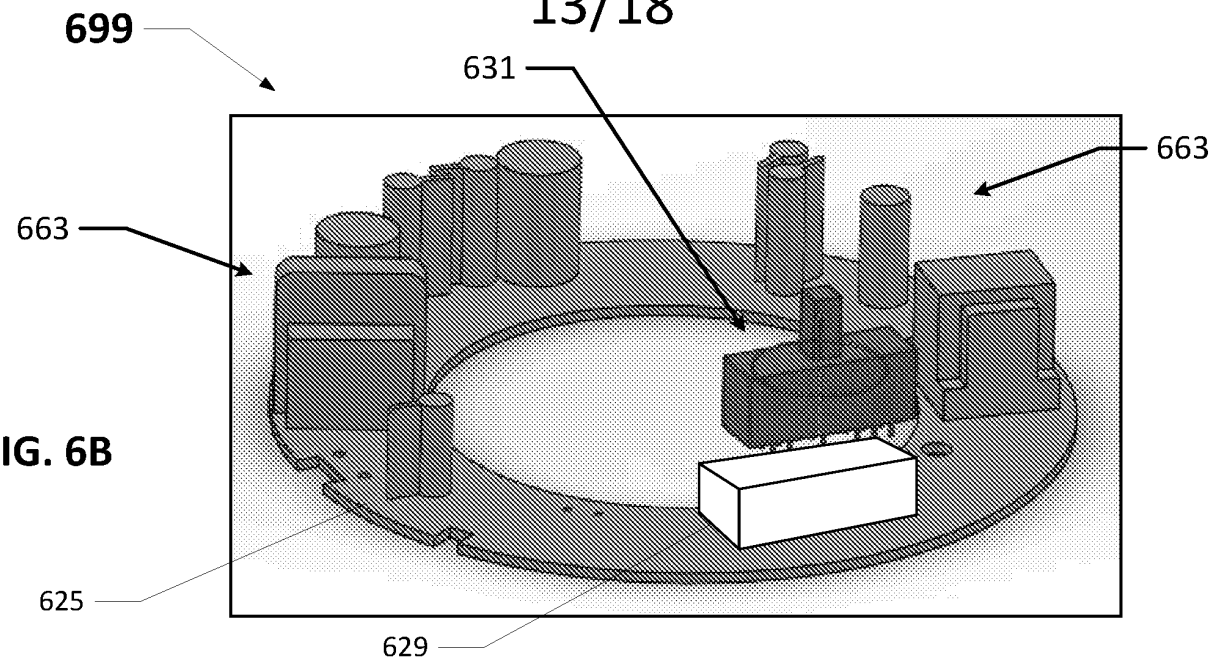
699
631
663
663
625
629

FIG. 6B

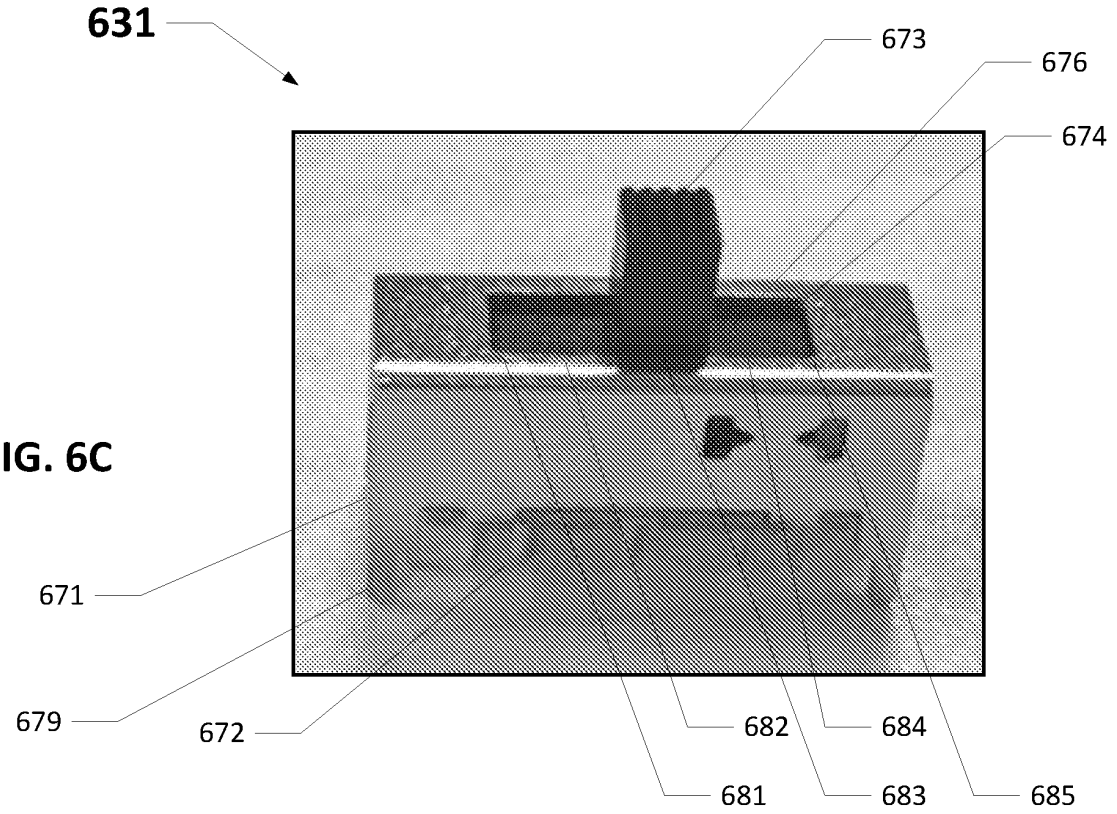
631
673
676
674
671
679
672
682
684
681
683
685

FIG. 6C

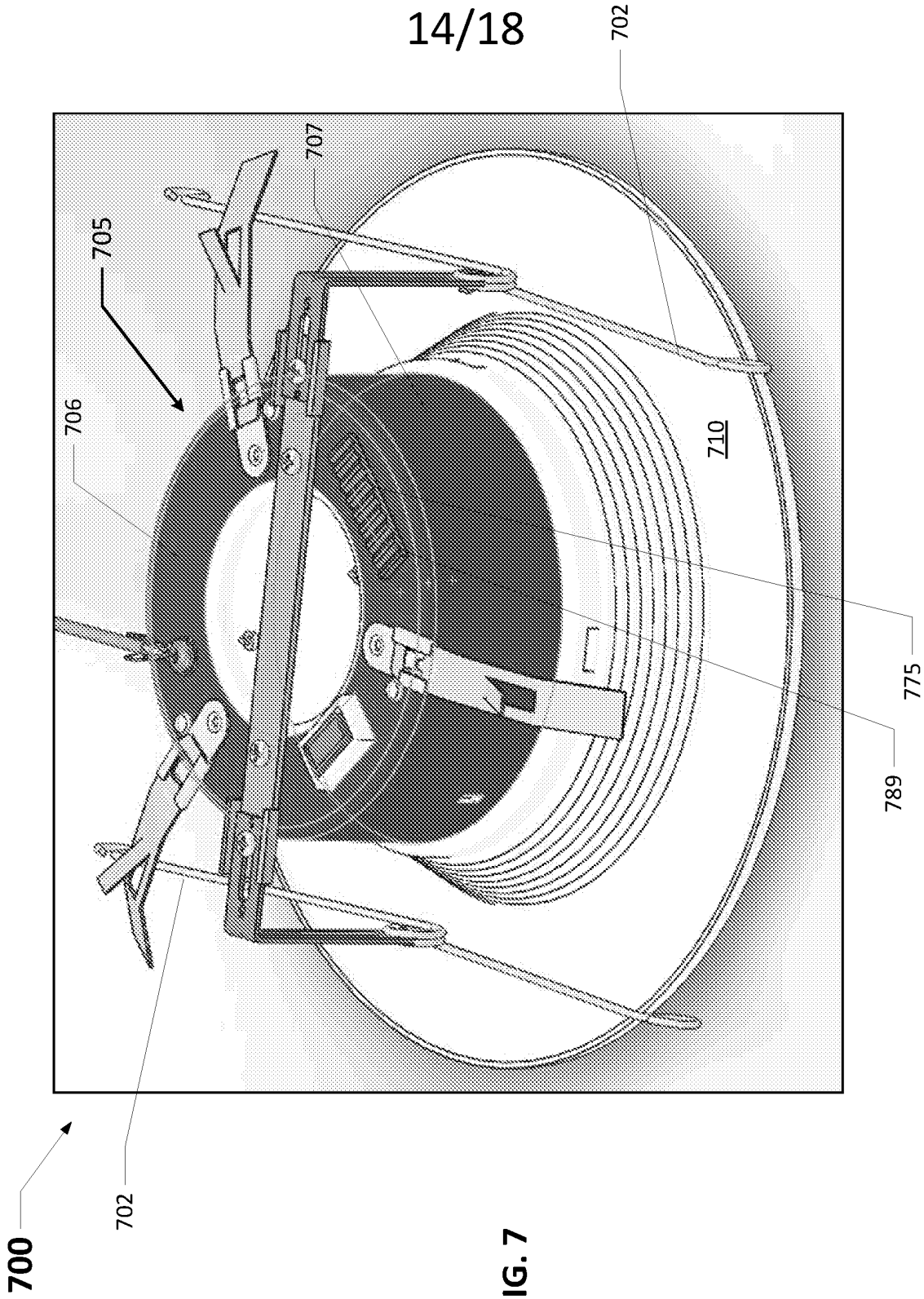

FIG. 7

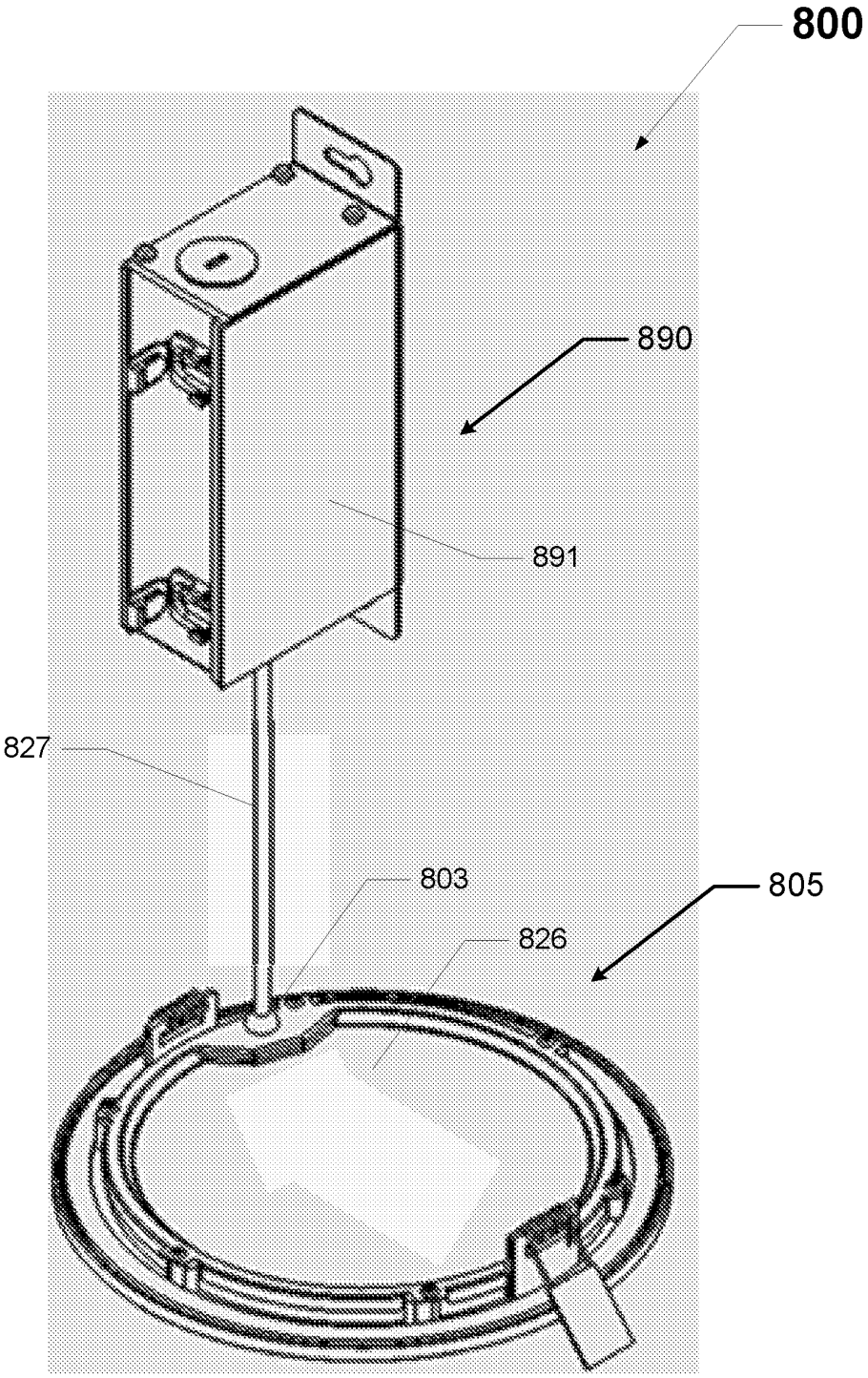

FIG. 8
(PRIOR ART)

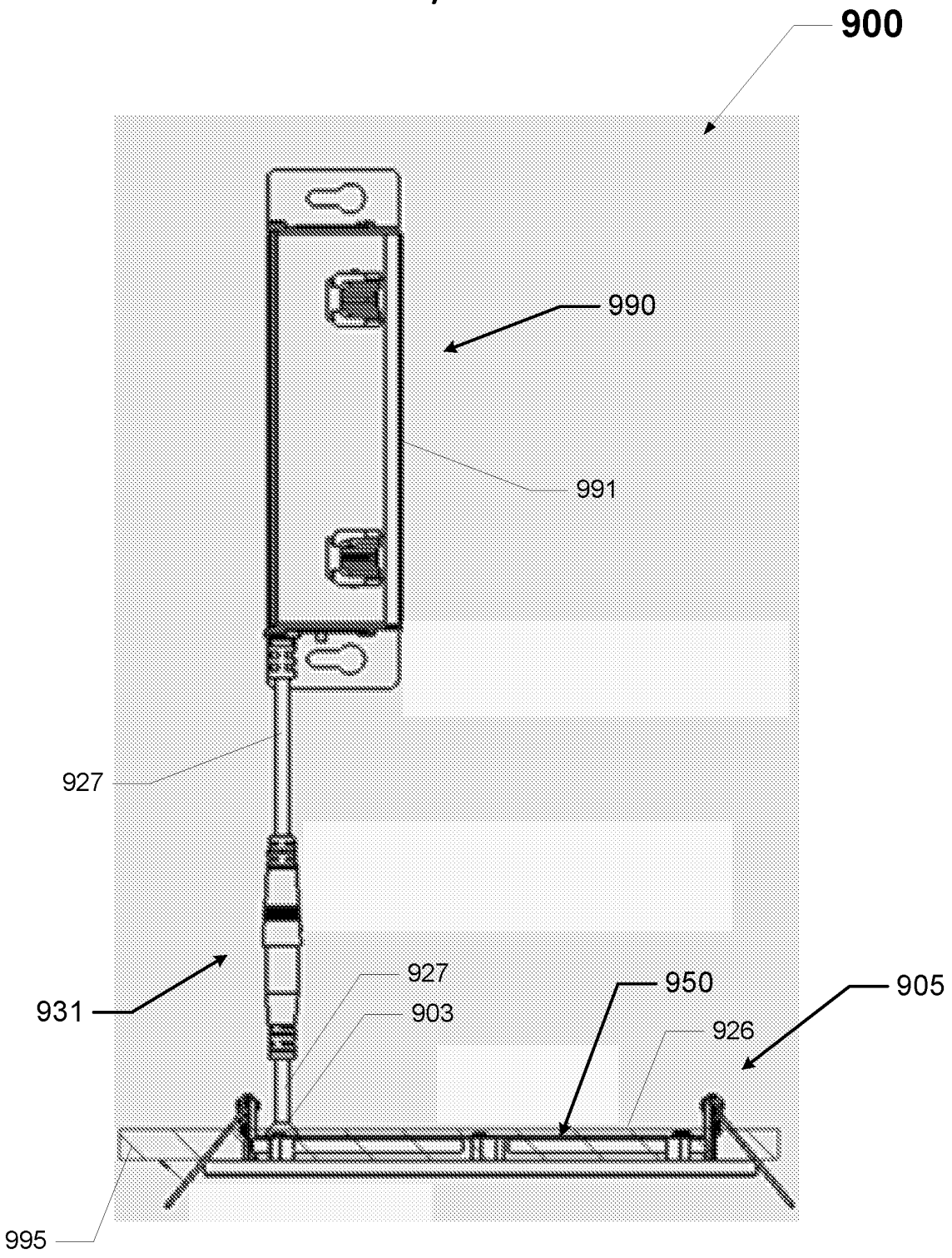

FIG. 9A

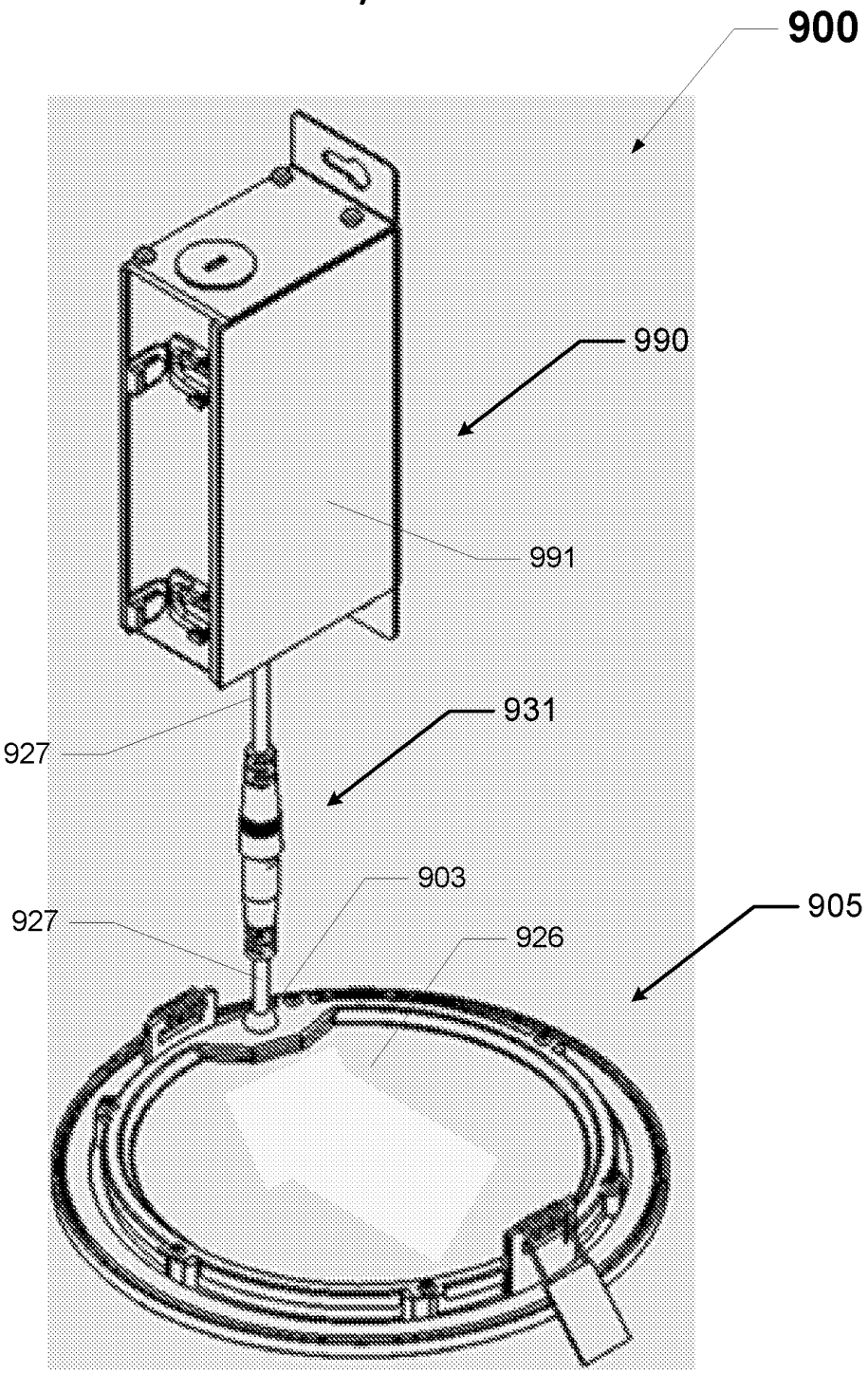

FIG. 9B

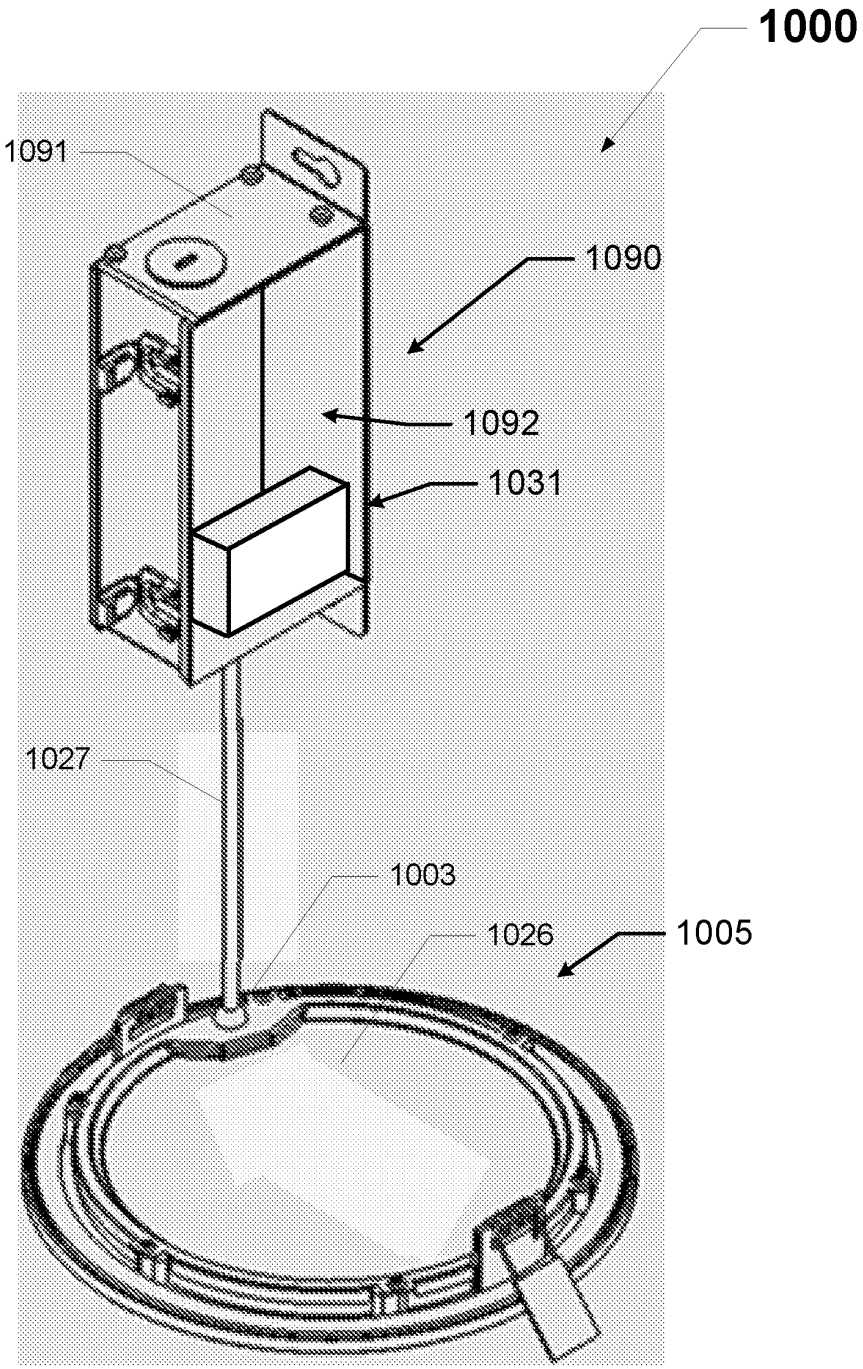

FIG. 10

DocCode – SCORE

SCORE Placeholder Sheet for IFW Content

Application Number: 16014394 Document Date: 06/21/2018

The presence of this form in the IFW record indicates that the following document type was received in electronic format on the date identified above. This content is stored in the SCORE database.

Since this was an electronic submission, there is no physical artifact folder, no artifact folder is recorded in PALM, and no paper documents or physical media exist. The TIFF images in the IFW record were created from the original documents that are stored in SCORE.

- Drawing

At the time of document entry (noted above):

- USPTO employees may access SCORE content via eDAN using the Supplemental Content tab, or via the SCORE web page.
- External customers may access SCORE content via PAIR using the Supplemental Content tab.

Form Revision Date: August 26, 2013

Document code: WFEE

United States Patent and Trademark Office
Sales Receipt for Accounting Date: 07/10/2018

CVORACHA SALE #00000025 Mailroom Dt: 06/21/2018 110980 16014394
01 FC : 1051 160.00 DA

Document Description: Application Data Sheet to update/correct info
Doc Code: ADS.CORR

CORRECTED ADS FORM

Application Number	16014394
Title of Invention	CONFIGURABLE LIGHTING SYSTEM

Inventor Information

****If no data is shown, no data has been corrected****

	Data of Record	Updated Data
Order Number	1	
Name	~~Orestes Orbe~~	John Edward Bowen
Residence Information		
Residency	us-residency	
City	~~Fairburn~~	Sharpsburg
State	GA	
Country of Residence	US	
Mailing Address of Inventor		
Address 1	~~7950 Lester Road~~	30 High Street
Address 2		
City,State/Province, Postal Code	~~Fairburn GA 30213~~	Sharpsburg GA 30277
Country	US	

Document Description: Application Data Sheet to update/correct info
Doc Code: ADS.CORR

	Data of Record	Updated Data
Order Number		2
Name		Raymond Janik
Residence Information		
Residency		us-residency
City		Fayetteville
State		GA
Country of Residence		US
Mailing Address of Inventor		
Address 1		155 Cheshire Chase
Address 2		
City,State/Province, Postal Code		Fayetteville GA 30215
Country		US

Application Information

	Data of Record	Updated Data
Title of Invention	CONFIGURABLE LIGHTING SYSTEM	
Attorney Docket Number	~~13682.227276~~	13682.227254
Entity Type	Regular Undiscounted	

Domestic Benefit/National Stage Information

****If no data is shown, no data has been corrected****

This section allows for the applicant to either claim benefit under 35 U.S.C. 119(e), 120, 121,365(c), or 386(c) or indicate National Stage entry from a PCT application. Providing this information in the application data sheet constitutes the specific reference required by 35 U.S. C. 119(e) or 120, and 37 CFR 1.78(a).

		Data of Record	Updated Data
	Prior Application Status	pending	
	Application Number	~~16014394~~	
	Continuity Type	~~PRO~~	CIP
	Prior Application Number	~~62523370~~	15811062
	Filing Date (YYYY-MM-DD)	~~2017-06-22~~	2017-11-13
	Patent Number		
	Issue Date (YYYY-MM-DD)	~~0001-01-01~~	

		Data of Record	Updated Data
	Prior Application Status		patented
	Application Number		15811062
	Continuity Type		CON
	Prior Application Number		15435141
	Filing Date (YYYY-MM-DD)		2017-02-16
	Patent Number		9820350
	Issue Date (YYYY-MM-DD)		2017-11-14

		Data of Record	Updated Data
	Prior Application Status		expired
	Application Number		15435141
	Continuity Type		PRO
	Prior Application Number		62/297424
	Filing Date (YYYY-MM-DD)		2016-02-19
	Patent Number		
	Issue Date (YYYY-MM-DD)		

Foreign Priority Information

****If no data is shown, no data has been corrected****

This section allows for the applicant to claim priority to a foreign application. Providing this information in the application data sheet constitutes the claim for priority as required by 35 U.S.C. 119(b) and 37 CFR 1.55. When priority is claimed to a foreign application that is eligible for retrieval under the priority document exchange program (PDX) the information will be used by the Office to automatically attempt retrieval pursuant to 37 CFR 1.55(i)(1) and (2). Under the PDX program, applicant bears the ultimate responsibility for ensuring that a copy of the foreign application is received by the Office from the participating foreign intellectual property office, or a certified copy of the foreign priority application is filed, within the time period specified in 37 CFR 1.55(g)(1).

		Data of Record	Updated Data
	Application Number		
	Country		
	Filing Date		
	Access Code		

Applicant Information

****If no data is shown, no data has been corrected****
Providing assignment information in this section does not substitute for compliance with any requirement of part 3 of Title 37 of CFR to have an assignment recorded by the Office.

	Data of Record	Updated Data
Applicant Type		
If applicant is the legal representative, indicate the authority to file the patent application, the inventor is		
Name of the Deceased or Legally Incapacitated Inventor		
Applicant is an Organization		
Name		
Organization Name		
Address 1		

Address 2		
City,State/Province,Postal Code		
Country		
Phone Number		
Fax Number		
Email Address		

Assignee Information including Non-Applicant Assignee Information

****If no data is shown, no data has been corrected****
Providing this information in the application data sheet does not substitute for compliance with any requirement of part 3 of Title 37 of the CFR to have an assignment recorded in the Office

	Data of Record	Updated Data
Order		
Applicant is an Organization		
Name		
Organization Name		
Mailing Address		
Address 1		
Address 2		
City,State/Province,Postal Code		
Country		
Phone Number		
Fax Number		

Email Address		

Signature

NOTE: This Application Data Sheet must be signed in accordance with 37 CFR 1.33(b).

This Application Data Sheet **must** be signed by a patent practitioner if one or more of the applicants is a **juristic entity** (e.g., corporation or association). If the applicant is two or more joint inventors, this form must be signed by a patent practitioner, **all** joint inventors who are the applicant, or one or more joint inventor-applicants who have been given power of attorney (e.g., see USPTO Form PTO/AIA/81) on behalf of **all** joint inventor-applicants.

See 37 CFR 1.4(d) for the manner of making signatures and certifications.

Signature	/Timothy Smith/	Registration Number	62052
First Name	Timothy	Last Name	Smith

Electronic Patent Application Fee Transmittal

Application Number:	16014394
Filing Date:	21-Jun-2018
Title of Invention:	CONFIGURABLE LIGHTING SYSTEM
First Named Inventor/Applicant Name:	
Filer:	Robert Timothy Neufeld
Attorney Docket Number:	13682.227276

Filed as Large Entity

Filing Fees for Utility under 35 USC 111(a)

Description	Fee Code	Quantity	Amount	Sub-Total in USD($)
Basic Filing:				
PROCESSING FEE, EXCEPT PROV. APPLS.	1830	1	140	140
Pages:				
Claims:				
Miscellaneous-Filing:				
Petition:				
Patent-Appeals-and-Interference:				
Post-Allowance-and-Post-Issuance:				

Description	Fee Code	Quantity	Amount	Sub-Total in USD($)
Extension-of-Time:				
Miscellaneous:				
			Total in USD ($)	**140**

Electronic Acknowledgement Receipt

EFS ID:	33164510
Application Number:	16014394
International Application Number:	
Confirmation Number:	1994
Title of Invention:	CONFIGURABLE LIGHTING SYSTEM
First Named Inventor/Applicant Name:	
Customer Number:	91764
Filer:	Robert Timothy Neufeld
Filer Authorized By:	
Attorney Docket Number:	13682.227276
Receipt Date:	12-JUL-2018
Filing Date:	21-JUN-2018
Time Stamp:	18:46:28
Application Type:	Utility under 35 USC 111(a)

Payment information:

Submitted with Payment	yes
Payment Type	CARD
Payment was successfully received in RAM	$140
RAM confirmation Number	071318INTEFSW18462700
Deposit Account	110980
Authorized User	Sally Sexton

The Director of the USPTO is hereby authorized to charge indicated fees and credit any overpayment as follows:

37 CFR 1.16 (National application filing, search, and examination fees)

37 CFR 1.17 (Patent application and reexamination processing fees)

37 CFR 1.19 (Document supply fees)

37 CFR 1.20 (Post Issuance fees)

37 CFR 1.21 (Miscellaneous fees and charges)

File Listing:

Document Number	Document Description	File Name	File Size(Bytes)/ Message Digest	Multi Part /.zip	Pages (if appl.)
1	Application Data Sheet to update/ correct info	CorrectedADS.pdf	86370 b2ac54bca6634648788cfe6046b73f8b421bbdb0	no	6
Warnings:					
Information:					
2	Fee Worksheet (SB06)	fee-info.pdf	30562 ffbbe0a855042262d73c21c57be1bc96557bd632	no	2
Warnings:					
Information:					
			Total Files Size (in bytes):	116932	

This Acknowledgement Receipt evidences receipt on the noted date by the USPTO of the indicated documents, characterized by the applicant, and including page counts, where applicable. It serves as evidence of receipt similar to a Post Card, as described in MPEP 503.

New Applications Under 35 U.S.C. 111
If a new application is being filed and the application includes the necessary components for a filing date (see 37 CFR 1.53(b)-(d) and MPEP 506), a Filing Receipt (37 CFR 1.54) will be issued in due course and the date shown on this Acknowledgement Receipt will establish the filing date of the application.
National Stage of an International Application under 35 U.S.C. 371
If a timely submission to enter the national stage of an international application is compliant with the conditions of 35 U.S.C. 371 and other applicable requirements a Form PCT/DO/EO/903 indicating acceptance of the application as a national stage submission under 35 U.S.C. 371 will be issued in addition to the Filing Receipt, in due course.
New International Application Filed with the USPTO as a Receiving Office
If a new international application is being filed and the international application includes the necessary components for an international filing date (see PCT Article 11 and MPEP 1810), a Notification of the International Application Number and of the International Filing Date (Form PCT/RO/105) will be issued in due course, subject to prescriptions concerning national security, and the date shown on this Acknowledgement Receipt will establish the international filing date of the application.

UNITED STATES PATENT AND TRADEMARK OFFICE

UNITED STATES DEPARTMENT OF COMMERCE
United States Patent and Trademark Office
Address: COMMISSIONER FOR PATENTS
P.O. Box 1450
Alexandria, Virginia 22313-1450
www.uspto.gov

APPLICATION NUMBER	FILING OR 371(C) DATE	FIRST NAMED APPLICANT	ATTY. DOCKET NO./TITLE
16/014,394	06/21/2018	Orestes Orbe	13682.227276

CONFIRMATION NO. 1994

INFORMAL NOTICE

91764
King & Spalding LLP (Eaton/Cooper)
ATTN: IP Docketing Department
1100 Louisiana Street, Suite 4000
Houston, TX 77002-5213

OC000000100892236

Date Mailed: 07/12/2018

INFORMATIONAL NOTICE TO APPLICANT

Applicant is notified that the above-identified application contains the deficiencies noted below. No period for reply is set forth in this notice for correction of these deficiencies. However, if a deficiency relates to the inventor's oath or declaration, the applicant must file an oath or declaration in compliance with 37 CFR 1.63, or a substitute statement in compliance with 37 CFR 1.64, executed by or with respect to each actual inventor no later than the expiration of the time period set in the "Notice of Allowability" to avoid abandonment. See 37 CFR 1.53(f).

The item(s) indicated below are also required and should be submitted with any reply to this notice to avoid further processing delays.

- A properly executed inventor's oath or declaration has not been received for the following inventor(s):
  Orestes Orbe

Questions about the contents of this notice and the requirements it sets forth should be directed to the Office of Data Management, Application Assistance Unit, at **(571) 272-4000** or **(571) 272-4200** or **1-888-786-0101**.

/hchin/

PATENT APPLICATION FEE DETERMINATION RECORD Substitute for Form PTO-875	Application or Docket Number 16/014,394

APPLICATION AS FILED - PART I

FOR	(Column 1) NUMBER FILED	(Column 2) NUMBER EXTRA	SMALL ENTITY RATE($)	SMALL ENTITY FEE($)	OR	OTHER THAN SMALL ENTITY RATE($)	OTHER THAN SMALL ENTITY FEE($)
BASIC FEE (37 CFR 1.16(a), (b), or (c))	N/A	N/A	N/A			N/A	300
SEARCH FEE (37 CFR 1.16(k), (i), or (m))	N/A	N/A	N/A			N/A	660
EXAMINATION FEE (37 CFR 1.16(o), (p), or (q))	N/A	N/A	N/A			N/A	760
TOTAL CLAIMS (37 CFR 1.16(i))	20 minus 20 =	*			OR	x 100 =	0.00
INDEPENDENT CLAIMS (37 CFR 1.16(h))	2 minus 3 =	*				x 460 =	0.00
APPLICATION SIZE FEE (37 CFR 1.16(s))	If the specification and drawings exceed 100 sheets of paper, the application size fee due is $310 ($155 for small entity) for each additional 50 sheets or fraction thereof. See 35 U.S.C. 41(a)(1)(G) and 37 CFR 1.16(s).						0.00
MULTIPLE DEPENDENT CLAIM PRESENT (37 CFR 1.16(j))							0.00
* If the difference in column 1 is less than zero, enter "0" in column 2.			TOTAL			TOTAL	1720

APPLICATION AS AMENDED - PART II

		(Column 1) CLAIMS REMAINING AFTER AMENDMENT		(Column 2) HIGHEST NUMBER PREVIOUSLY PAID FOR	(Column 3) PRESENT EXTRA	SMALL ENTITY RATE($)	SMALL ENTITY ADDITIONAL FEE($)	OR	OTHER THAN SMALL ENTITY RATE($)	OTHER THAN SMALL ENTITY ADDITIONAL FEE($)
AMENDMENT A	Total (37 CFR 1.16(i))	*	Minus	**	=	x =		OR	x =	
AMENDMENT A	Independent (37 CFR 1.16(h))	*	Minus	***	=	x =		OR	x =	
AMENDMENT A	Application Size Fee (37 CFR 1.16(s))									
AMENDMENT A	FIRST PRESENTATION OF MULTIPLE DEPENDENT CLAIM (37 CFR 1.16(j))							OR		
						TOTAL ADD'L FEE		OR	TOTAL ADD'L FEE	

		(Column 1) CLAIMS REMAINING AFTER AMENDMENT		(Column 2) HIGHEST NUMBER PREVIOUSLY PAID FOR	(Column 3) PRESENT EXTRA	RATE($)	ADDITIONAL FEE($)	OR	RATE($)	ADDITIONAL FEE($)
AMENDMENT B	Total (37 CFR 1.16(i))	*	Minus	**	=	x =		OR	x =	
AMENDMENT B	Independent (37 CFR 1.16(h))	*	Minus	***	=	x =		OR	x =	
AMENDMENT B	Application Size Fee (37 CFR 1.16(s))									
AMENDMENT B	FIRST PRESENTATION OF MULTIPLE DEPENDENT CLAIM (37 CFR 1.16(j))							OR		
						TOTAL ADD'L FEE		OR	TOTAL ADD'L FEE	

* If the entry in column 1 is less than the entry in column 2, write "0" in column 3.
** If the "Highest Number Previously Paid For" IN THIS SPACE is less than 20, enter "20".
*** If the "Highest Number Previously Paid For" IN THIS SPACE is less than 3, enter "3".
The "Highest Number Previously Paid For" (Total or Independent) is the highest found in the appropriate box in column 1.

UNITED STATES PATENT AND TRADEMARK OFFICE

UNITED STATES DEPARTMENT OF COMMERCE
United States Patent and Trademark Office
Address: COMMISSIONER FOR PATENTS
P.O. Box 1450
Alexandria, Virginia 22313-1450
www.uspto.gov

APPLICATION NUMBER	FILING or 371(c) DATE	GRP ART UNIT	FIL FEE REC'D	ATTY.DOCKET.NO	TOT CLAIMS	IND CLAIMS
16/014,394	06/21/2018	2875	1880	13682.227276	20	2

CONFIRMATION NO. 1994

FILING RECEIPT

OC000000100892233

91764
King & Spalding LLP (Eaton/Cooper)
ATTN: IP Docketing Department
1100 Louisiana Street, Suite 4000
Houston, TX 77002-5213

Date Mailed: 07/12/2018

Receipt is acknowledged of this non-provisional patent application. The application will be taken up for examination in due course. Applicant will be notified as to the results of the examination. Any correspondence concerning the application must include the following identification information: the U.S. APPLICATION NUMBER, FILING DATE, NAME OF APPLICANT, and TITLE OF INVENTION. Fees transmitted by check or draft are subject to collection. Please verify the accuracy of the data presented on this receipt. **If an error is noted on this Filing Receipt, please submit a written request for a Filing Receipt Correction. Please provide a copy of this Filing Receipt with the changes noted thereon. If you received a "Notice to File Missing Parts" for this application, please submit any corrections to this Filing Receipt with your reply to the Notice. When the USPTO processes the reply to the Notice, the USPTO will generate another Filing Receipt incorporating the requested corrections**

Inventor(s)

Orestes Orbe, Fairburn, GA;

Applicant(s)

Eaton Intelligent Power Limited, Dublin, IRELAND;

Power of Attorney: None

Domestic Priority data as claimed by applicant

This appln claims benefit of 62/523,370 06/22/2017

Foreign Applications for which priority is claimed (You may be eligible to benefit from the **Patent Prosecution Highway** program at the USPTO. Please see http://www.uspto.gov for more information.) - None.
Foreign application information must be provided in an Application Data Sheet in order to constitute a claim to foreign priority. See 37 CFR 1.55 and 1.76.

Permission to Access Application via Priority Document Exchange: Yes

Permission to Access Search Results: Yes

Applicant may provide or rescind an authorization for access using Form PTO/SB/39 or Form PTO/SB/69 as appropriate.

If Required, Foreign Filing License Granted: 07/10/2018
The country code and number of your priority application, to be used for filing abroad under the Paris Convention, is **US 16/014,394**
Projected Publication Date: 12/27/2018

Non-Publication Request: No

Early Publication Request: No
Title

CONFIGURABLE LIGHTING SYSTEM

Preliminary Class

362

Statement under 37 CFR 1.55 or 1.78 for AIA (First Inventor to File) Transition Applications: No

PROTECTING YOUR INVENTION OUTSIDE THE UNITED STATES

Since the rights granted by a U.S. patent extend only throughout the territory of the United States and have no effect in a foreign country, an inventor who wishes patent protection in another country must apply for a patent in a specific country or in regional patent offices. Applicants may wish to consider the filing of an international application under the Patent Cooperation Treaty (PCT). An international (PCT) application generally has the same effect as a regular national patent application in each PCT-member country. The PCT process **simplifies** the filing of patent applications on the same invention in member countries, but **does not result** in a grant of "an international patent" and does not eliminate the need of applicants to file additional documents and fees in countries where patent protection is desired.

Almost every country has its own patent law, and a person desiring a patent in a particular country must make an application for patent in that country in accordance with its particular laws. Since the laws of many countries differ in various respects from the patent law of the United States, applicants are advised to seek guidance from specific foreign countries to ensure that patent rights are not lost prematurely.

Applicants also are advised that in the case of inventions made in the United States, the Director of the USPTO must issue a license before applicants can apply for a patent in a foreign country. The filing of a U.S. patent application serves as a request for a foreign filing license. The application's filing receipt contains further information and guidance as to the status of applicant's license for foreign filing.

Applicants may wish to consult the USPTO booklet, "General Information Concerning Patents" (specifically, the section entitled "Treaties and Foreign Patents") for more information on timeframes and deadlines for filing foreign patent applications. The guide is available either by contacting the USPTO Contact Center at 800-786-9199, or it can be viewed on the USPTO website at http://www.uspto.gov/web/offices/pac/doc/general/index.html.

For information on preventing theft of your intellectual property (patents, trademarks and copyrights), you may wish to consult the U.S. Government website, http://www.stopfakes.gov. Part of a Department of Commerce initiative, this website includes self-help "toolkits" giving innovators guidance on how to protect intellectual property in specific countries such as China, Korea and Mexico. For questions regarding patent enforcement issues, applicants may call the U.S. Government hotline at 1-866-999-HALT (1-866-999-4258).

Luminex v. Signify
Luminex Exhibit 1007
Page 078

LICENSE FOR FOREIGN FILING UNDER

Title 35, United States Code, Section 184

Title 37, Code of Federal Regulations, 5.11 & 5.15

GRANTED

The applicant has been granted a license under 35 U.S.C. 184, if the phrase "IF REQUIRED, FOREIGN FILING LICENSE GRANTED" followed by a date appears on this form. Such licenses are issued in all applications where the conditions for issuance of a license have been met, regardless of whether or not a license may be required as set forth in 37 CFR 5.15. The scope and limitations of this license are set forth in 37 CFR 5.15(a) unless an earlier license has been issued under 37 CFR 5.15(b). The license is subject to revocation upon written notification. The date indicated is the effective date of the license, unless an earlier license of similar scope has been granted under 37 CFR 5.13 or 5.14.

This license is to be retained by the licensee and may be used at any time on or after the effective date thereof unless it is revoked. This license is automatically transferred to any related applications(s) filed under 37 CFR 1.53(d). This license is not retroactive.

The grant of a license does not in any way lessen the responsibility of a licensee for the security of the subject matter as imposed by any Government contract or the provisions of existing laws relating to espionage and the national security or the export of technical data. Licensees should apprise themselves of current regulations especially with respect to certain countries, of other agencies, particularly the Office of Defense Trade Controls, Department of State (with respect to Arms, Munitions and Implements of War (22 CFR 121-128)); the Bureau of Industry and Security, Department of Commerce (15 CFR parts 730-774); the Office of Foreign AssetsControl, Department of Treasury (31 CFR Parts 500+) and the Department of Energy.

NOT GRANTED

No license under 35 U.S.C. 184 has been granted at this time, if the phrase "IF REQUIRED, FOREIGN FILING LICENSE GRANTED" DOES NOT appear on this form. Applicant may still petition for a license under 37 CFR 5.12, if a license is desired before the expiration of 6 months from the filing date of the application. If 6 months has lapsed from the filing date of this application and the licensee has not received any indication of a secrecy order under 35 U.S.C. 181, the licensee may foreign file the application pursuant to 37 CFR 5.15(b).

SelectUSA

The United States represents the largest, most dynamic marketplace in the world and is an unparalleled location for business investment, innovation, and commercialization of new technologies. The U.S. offers tremendous resources and advantages for those who invest and manufacture goods here. Through SelectUSA, our nation works to promote and facilitate business investment. SelectUSA provides information assistance to the international investor community; serves as an ombudsman for existing and potential investors; advocates on behalf of U.S. cities, states, and regions competing for global investment; and counsels U.S. economic development organizations on investment attraction best practices. To learn more about why the United States is the best country in the world to develop technology, manufacture products, deliver services, and grow your business, visit http://www.SelectUSA.gov or call +1-202-482-6800.

UNITED STATES PATENT AND TRADEMARK OFFICE

UNITED STATES DEPARTMENT OF COMMERCE
United States Patent and Trademark Office
Address: COMMISSIONER FOR PATENTS
P.O. Box 1450
Alexandria, Virginia 22313-1450
www.uspto.gov

APPLICATION NUMBER	FILING OR 371(C) DATE	FIRST NAMED APPLICANT	ATTY. DOCKET NO./TITLE
16/014,394	06/21/2018	John Edward Bowen	13682.227254

CONFIRMATION NO. 1994

91764
King & Spalding LLP (Eaton/Cooper)
ATTN: IP Docketing Department
1100 Louisiana Street, Suite 4000
Houston, TX 77002-5213

37 CFR 1.48 ACKNOWLEDGEMENT LETTER

OC000000100993022

Date Mailed: 07/17/2018

NOTICE OF ACCEPTANCE OF REQUEST UNDER 37 CFR 1.48(a)

This is in response to the applicant's request under 37 CFR 1.48(a) submitted on 07/12/2018.

The request under 37 CFR 1.48(a) to correct the inventorship, to correct or update the name of an inventor, or to correct the order of names of joint inventors is accepted.

Questions about the contents of this notice and the requirements it sets forth should be directed to the Office of Data Management, Application Assistance Unit, at **(571) 272-4000** or **(571) 272-4200** or **1-888-786-0101**.

/mmasfaw/

UNITED STATES PATENT AND TRADEMARK OFFICE

UNITED STATES DEPARTMENT OF COMMERCE
United States Patent and Trademark Office
Address: COMMISSIONER FOR PATENTS
P.O. Box 1450
Alexandria, Virginia 22313-1450
www.uspto.gov

APPLICATION NUMBER	FILING or 371(c) DATE	GRP ART UNIT	FIL FEE REC'D	ATTY.DOCKET.NO	TOT CLAIMS	IND CLAIMS
16/014,394	06/21/2018	2875	1880	13682.227254	20	2

CONFIRMATION NO. 1994

UPDATED FILING RECEIPT

91764
King & Spalding LLP (Eaton/Cooper)
ATTN: IP Docketing Department
1100 Louisiana Street, Suite 4000
Houston, TX 77002-5213

OC000000100993021

Date Mailed: 07/17/2018

Receipt is acknowledged of this non-provisional patent application. The application will be taken up for examination in due course. Applicant will be notified as to the results of the examination. Any correspondence concerning the application must include the following identification information: the U.S. APPLICATION NUMBER, FILING DATE, NAME OF APPLICANT, and TITLE OF INVENTION. Fees transmitted by check or draft are subject to collection. Please verify the accuracy of the data presented on this receipt. **If an error is noted on this Filing Receipt, please submit a written request for a Filing Receipt Correction. Please provide a copy of this Filing Receipt with the changes noted thereon. If you received a "Notice to File Missing Parts" for this application, please submit any corrections to this Filing Receipt with your reply to the Notice. When the USPTO processes the reply to the Notice, the USPTO will generate another Filing Receipt incorporating the requested corrections**

Inventor(s)

John Edward Bowen, Sharpsburg, GA;
Raymond Janik, Fayetteville, GA;

Applicant(s)

Eaton Intelligent Power Limited, Dublin, IRELAND;

Power of Attorney: None

Domestic Priority data as claimed by applicant

This application is a CIP of 15/811,062 11/13/2017
which is a CON of 15/435,141 02/16/2017 PAT 9820350
which claims benefit of 62/297,424 02/19/2016

Foreign Applications for which priority is claimed (You may be eligible to benefit from the **Patent Prosecution Highway** program at the USPTO. Please see http://www.uspto.gov for more information.) - None.
Foreign application information must be provided in an Application Data Sheet in order to constitute a claim to foreign priority. See 37 CFR 1.55 and 1.76.

Permission to Access Application via Priority Document Exchange: Yes

Permission to Access Search Results: Yes

Applicant may provide or rescind an authorization for access using Form PTO/SB/39 or Form PTO/SB/69 as appropriate.

Projected Publication Date: 10/25/2018

Non-Publication Request: No

Early Publication Request: No
Title

CONFIGURABLE LIGHTING SYSTEM

Preliminary Class

362

Statement under 37 CFR 1.55 or 1.78 for AIA (First Inventor to File) Transition Applications: No

PROTECTING YOUR INVENTION OUTSIDE THE UNITED STATES

Since the rights granted by a U.S. patent extend only throughout the territory of the United States and have no effect in a foreign country, an inventor who wishes patent protection in another country must apply for a patent in a specific country or in regional patent offices. Applicants may wish to consider the filing of an international application under the Patent Cooperation Treaty (PCT). An international (PCT) application generally has the same effect as a regular national patent application in each PCT-member country. The PCT process **simplifies** the filing of patent applications on the same invention in member countries, but **does not result** in a grant of "an international patent" and does not eliminate the need of applicants to file additional documents and fees in countries where patent protection is desired.

Almost every country has its own patent law, and a person desiring a patent in a particular country must make an application for patent in that country in accordance with its particular laws. Since the laws of many countries differ in various respects from the patent law of the United States, applicants are advised to seek guidance from specific foreign countries to ensure that patent rights are not lost prematurely.

Applicants also are advised that in the case of inventions made in the United States, the Director of the USPTO must issue a license before applicants can apply for a patent in a foreign country. The filing of a U.S. patent application serves as a request for a foreign filing license. The application's filing receipt contains further information and guidance as to the status of applicant's license for foreign filing.

Applicants may wish to consult the USPTO booklet, "General Information Concerning Patents" (specifically, the section entitled "Treaties and Foreign Patents") for more information on timeframes and deadlines for filing foreign patent applications. The guide is available either by contacting the USPTO Contact Center at 800-786-9199, or it can be viewed on the USPTO website at http://www.uspto.gov/web/offices/pac/doc/general/index.html.

For information on preventing theft of your intellectual property (patents, trademarks and copyrights), you may wish to consult the U.S. Government website, http://www.stopfakes.gov. Part of a Department of Commerce initiative, this website includes self-help "toolkits" giving innovators guidance on how to protect intellectual property in specific countries such as China, Korea and Mexico. For questions regarding patent enforcement issues, applicants may call the U.S. Government hotline at 1-866-999-HALT (1-866-999-4258).

Luminex v. Signify
Luminex Exhibit 1007
Page 082

LICENSE FOR FOREIGN FILING UNDER

Title 35, United States Code, Section 184

Title 37, Code of Federal Regulations, 5.11 & 5.15

GRANTED

The applicant has been granted a license under 35 U.S.C. 184, if the phrase "IF REQUIRED, FOREIGN FILING LICENSE GRANTED" followed by a date appears on this form. Such licenses are issued in all applications where the conditions for issuance of a license have been met, regardless of whether or not a license may be required as set forth in 37 CFR 5.15. The scope and limitations of this license are set forth in 37 CFR 5.15(a) unless an earlier license has been issued under 37 CFR 5.15(b). The license is subject to revocation upon written notification. The date indicated is the effective date of the license, unless an earlier license of similar scope has been granted under 37 CFR 5.13 or 5.14.

This license is to be retained by the licensee and may be used at any time on or after the effective date thereof unless it is revoked. This license is automatically transferred to any related applications(s) filed under 37 CFR 1.53(d). This license is not retroactive.

The grant of a license does not in any way lessen the responsibility of a licensee for the security of the subject matter as imposed by any Government contract or the provisions of existing laws relating to espionage and the national security or the export of technical data. Licensees should apprise themselves of current regulations especially with respect to certain countries, of other agencies, particularly the Office of Defense Trade Controls, Department of State (with respect to Arms, Munitions and Implements of War (22 CFR 121-128)); the Bureau of Industry and Security, Department of Commerce (15 CFR parts 730-774); the Office of Foreign AssetsControl, Department of Treasury (31 CFR Parts 500+) and the Department of Energy.

NOT GRANTED

No license under 35 U.S.C. 184 has been granted at this time, if the phrase "IF REQUIRED, FOREIGN FILING LICENSE GRANTED" DOES NOT appear on this form. Applicant may still petition for a license under 37 CFR 5.12, if a license is desired before the expiration of 6 months from the filing date of the application. If 6 months has lapsed from the filing date of this application and the licensee has not received any indication of a secrecy order under 35 U.S.C. 181, the licensee may foreign file the application pursuant to 37 CFR 5.15(b).

SelectUSA

The United States represents the largest, most dynamic marketplace in the world and is an unparalleled location for business investment, innovation, and commercialization of new technologies. The U.S. offers tremendous resources and advantages for those who invest and manufacture goods here. Through SelectUSA, our nation works to promote and facilitate business investment. SelectUSA provides information assistance to the international investor community; serves as an ombudsman for existing and potential investors; advocates on behalf of U.S. cities, states, and regions competing for global investment; and counsels U.S. economic development organizations on investment attraction best practices. To learn more about why the United States is the best country in the world to develop technology, manufacture products, deliver services, and grow your business, visit http://www.SelectUSA.gov or call +1-202-482-6800.

Electronic Acknowledgement Receipt

EFS ID:	33266096
Application Number:	16014394
International Application Number:	
Confirmation Number:	1994
Title of Invention:	CONFIGURABLE LIGHTING SYSTEM
First Named Inventor/Applicant Name:	John Edward Bowen
Customer Number:	91764
Filer:	Robert Timothy Neufeld
Filer Authorized By:	
Attorney Docket Number:	13682.227254
Receipt Date:	26-JUL-2018
Filing Date:	21-JUN-2018
Time Stamp:	14:14:54
Application Type:	Utility under 35 USC 111(a)

Payment information:

Submitted with Payment	no

File Listing:

Document Number	Document Description	File Name	File Size(Bytes)/ Message Digest	Multi Part /.zip	Pages (if appl.)
1	Transmittal Letter	227254trans.pdf	82315 e3e197ee8efcc8de995b7478f8cbc90f01e946c9	no	1

Warnings:

Information:					
2	Information Disclosure Statement (IDS) Form (SB08)	227254ids.pdf	127316 ef94c6437a392712ef153aebae6d51473fed0123	no	1
Warnings:					
Information:					
This is not an USPTO supplied IDS fillable form					
			Total Files Size (in bytes):	209631	

This Acknowledgement Receipt evidences receipt on the noted date by the USPTO of the indicated documents, characterized by the applicant, and including page counts, where applicable. It serves as evidence of receipt similar to a Post Card, as described in MPEP 503.

<u>New Applications Under 35 U.S.C. 111</u>
If a new application is being filed and the application includes the necessary components for a filing date (see 37 CFR 1.53(b)-(d) and MPEP 506), a Filing Receipt (37 CFR 1.54) will be issued in due course and the date shown on this Acknowledgement Receipt will establish the filing date of the application.
<u>National Stage of an International Application under 35 U.S.C. 371</u>
If a timely submission to enter the national stage of an international application is compliant with the conditions of 35 U.S.C. 371 and other applicable requirements a Form PCT/DO/EO/903 indicating acceptance of the application as a national stage submission under 35 U.S.C. 371 will be issued in addition to the Filing Receipt, in due course.
<u>New International Application Filed with the USPTO as a Receiving Office</u>
If a new international application is being filed and the international application includes the necessary components for an international filing date (see PCT Article 11 and MPEP 1810), a Notification of the International Application Number and of the International Filing Date (Form PCT/RO/105) will be issued in due course, subject to prescriptions concerning national security, and the date shown on this Acknowledgement Receipt will establish the international filing date of the application.

IN THE UNITED STATES PATENT AND TRADEMARK OFFICE

In re Application of:	§	
Steven Walter Pyshos	§	Confirmation No.: **1994**
	§	
Application Serial No: **16/014,394**	§	Group Art Unit: **2875**
	§	
Filed: **06-21-2018**	§	Examiner: **Not Yet Assigned**
	§	
For: **Configurable Lighting System**	§	
	§	

INFORMATION DISCLOSURE STATEMENT

Commissioner for Patents
P.O. Box 1450
Alexandria, VA 22313-1450

Sir:

Applicants cite the information on the attached Form PTO/SB/08A, "Information Disclosure Statement by Applicant," pursuant to 37 C.F.R. §§ 1.56, 1.97, and 1.98. The present application claims priority to U.S. patent application number 15/811,062, 15/435,141 under 35 U.S.C. 120 and therefore, copies of the references previously submitted are not being resubmitted in accordance with 37 C.F.R. § 1.98(d).

The citation of this information does not constitute an admission that any of the materials are available as a reference or of priority, or a waiver of any right Applicants may have under applicable statutes, Rules of Practice in patent cases, or otherwise.

KING & SPALDING LLP
Intellectual Property Dept. - Patents
1180 Peachtree Street, N.E.
34th Floor
Atlanta, Georgia 30309-3521
Telephone (404) 572-4600
Attorney Docket: 13682.227254

Respectfully submitted,

/Robert T. Neufeld/

Robert T. Neufeld
Reg. No. 48,394

PTO/SB/08A (08-03)
Approved for use through 07/31/2006. OMB 0651-0031
U.S. Patent and Trademark Office: U.S. DEPARTMENT OF COMMERCE
Under the Paperwork Reduction Act of 1995, no persons are required to respond to a collection of information unless it contains a valid OMB control number.

Substitute for form 1449A/PTO

INFORMATION DISCLOSURE STATEMENT BY APPLICANT

(use as many sheets as necessary)

Sheet	1	of	1

Complete if Known	
Application Number	**16/014395**
Filing Date	**June 21, 2018**
First Named Inventor	**Steven Walter Pyshos**
Group Art Unit	**Not yet assigned**
Examiner Name	**Not yet assigned**
Attorney Docket Number	**13682.227254**

U.S. PATENT DOCUMENTS

Examiner Initials *	Cite No. [1]	U.S. Patent Document Number	Kind Code [2] (if known)	Name of Patentee or Applicant of Cited Document	Date of Publication of Cited Document MM-DD- YYYY	Pages, Columns, Lines, Where Relevant Passages or Relevant Figures Appear
	1	8941312		McRae	01-27-2015	
	2	9892693		Kumar	02-13-2018	
	3	20150054410		Sanders, Chad N.	02-26-2015	
	4	8172415		Wegh, Rene Theodorus	05-08-2012	
	5	7416312		McDermott	08-26-2008	
	6	8317362		Ku et al.	11-27-2012	
	7	20140210357		Yan et al.	07-31-2014	
	8	20060220586		Latham	10-05-2006	
	9	20170086265		Akiyama et al.	03-23-2017	
	10	20170019973		Beck et al.	01-19-2017	
	11	8598793		Yan, Xiantao	12-03-2013	
	12	2014/0210376		Hicks, IV; Roy	07-31-2014	
	13	9820350		Pyshos	11-14-2017	

FOREIGN PATENT DOCUMENTS

Examiner Initials *	Cite No. [1]	Foreign Patent Document Office [3]	Number	Kind Code [2] (if known)	Name of Patentee or Applicant of Cited Document	Date of Publication of Cited Document MM-DD- YYYY	Pages, Columns, Lines, Where Relevant Passages or Relevant Figures Appear	T [6]

OTHER PRIOR ART – NON PATENT LITERATURE DOCUMENTS

Examiner Initials *	Cite No. [1]	Include name of the author (in CAPITAL LETTERS), title of the article (when appropriate), title of the item (book, magazine, journal, serial, symposium, catalog, etc.), date, page(s), volume-issue number(s), publisher, city and/or country where published.	T [6]
	14	Test Report of California Appliance Efficiency Compliance for Permanently Installed High Efficacy LEDs under Title 24, issued November 18, 2015	
	15	Energy Star, Certificate of Compliance; Certificate No. 1129756, issued 11/25/2015	
	16	Test Report of IES LM-79-08; Approved Method: Electrical and Photometric Measurements of Solid-State Lighting Products; issued November 18, 2015	

Examiner Signature		Date Considered	

*EXAMINER: Initial if reference considered, whether or not citation is in conformance with MPEP 609. Draw line through citation if not in conformance and not considered. Include copy of this form with next communication to applicant.

[1] Unique citation designation number. [2] See attached Kinds of U.S. Patent Documents. [3] Enter Office that issued the document, by the two-letter code (WIPO Standard ST.3). [4] For Japanese patent documents, the indication of the year of the reign of the Emperor must precede the serial number of the patent document. [5] Kind of document by the appropriate symbols as indicated on the document under WIPO Standard ST. 16 if possible. [6] Applicant is to place a check mark here if English language Translation is attached.

Burden Hour Statement: This form is estimated to take 2.0 hours to complete. Time will vary depending upon the needs of the individual case. Any comments on the amount of time you are required to complete this form should be sent to the Chief Information Officer, U. S. Patent and Trademark Office, Washington, DC 20231. DO NOT SEND FEES OR COMPLETED FORMS TO THIS ADDRESS. SEND TO: Assistant Commissioner for Patents, Washington, DC 20231.

UNITED STATES PATENT AND TRADEMARK OFFICE

UNITED STATES DEPARTMENT OF COMMERCE
United States Patent and Trademark Office
Address: COMMISSIONER FOR PATENTS
P.O. Box 1450
Alexandria, Virginia 22313-1450
www.uspto.gov

BIB DATA SHEET

CONFIRMATION NO. 1994

SERIAL NUMBER	FILING or 371(c) DATE	CLASS	GROUP ART UNIT	ATTORNEY DOCKET NO.
16/014,394	06/21/2018 RULE	315	2844	13682.227254

APPLICANTS
Eaton Intelligent Power Limited, Dublin, IRELAND;

INVENTORS
John Edward Bowen, Sharpsburg, GA;
Raymond Janik, Fayetteville, GA;

**** CONTINUING DATA ***************************
This application is a CIP of 15/811,062 11/13/2017
which is a CON of 15/435,141 02/16/2017 PAT 9820350
which claims benefit of 62/297,424 02/19/2016

**** FOREIGN APPLICATIONS ***************************

**** IF REQUIRED, FOREIGN FILING LICENSE GRANTED ****

Foreign Priority claimed	☐ Yes ☑ No		STATE OR COUNTRY	SHEETS DRAWINGS	TOTAL CLAIMS	INDEPENDENT CLAIMS
35 USC 119(a-d) conditions met	☐ Yes ☑ No	☐ Met after Allowance	GA	18	20	2
Verified and Acknowledged	/JIMMY T VU/ Examiner's Signature	/JV/ Initials				

ADDRESS
King & Spalding LLP (Eaton/Cooper)
ATTN: IP Docketing Department
1100 Louisiana Street, Suite 4000
Houston, TX 77002-5213
UNITED STATES

TITLE
CONFIGURABLE LIGHTING SYSTEM

FILING FEE RECEIVED		
1880	FEES: Authority has been given in Paper No._____ to charge/credit DEPOSIT ACCOUNT No._____ for following:	☐ All Fees ☐ 1.16 Fees (Filing) ☐ 1.17 Fees (Processing Ext. of time) ☐ 1.18 Fees (Issue) ☐ Other _____ ☐ Credit

Search Notes	Application/Control No.	Applicant(s)/Patent Under Reexamination
	16014394	BOWEN ET AL.
	Examiner	**Art Unit**
	JIMMY VU	2844

CPC- SEARCHED		
Symbol	**Date**	**Examiner**
H05B37/02|H05B33/08|H05B33/0845|H05B33/0863|F21K9/62|F21S8/026|F21V3/02|F21V5/04|F21V7/00|F21V17/12|F21V21/088|F21V23/001|F21Y2113/13|F21Y2115/10	9/30/18	JV

CPC COMBINATION SETS - SEARCHED		
Symbol	**Date**	**Examiner**

US CLASSIFICATION SEARCHED			
Class	**Subclass**	**Date**	**Examiner**
315	151,185R,209R,291,294,307,308,312	9/30/18	JV

* See search history printout included with this form or the SEARCH NOTES box below to determine the scope of the search.

SEARCH NOTES		
Search Notes	**Date**	**Examiner**
Class/subclass, CPC, Text, Assignment data, Inventor name, &Back/Forward search (EAST)	9/30/18	JV
considered IDS	9/30/18	JV
updated search	10/1/18	JV

INTERFERENCE SEARCH			
US Class/ CPC Symbol	**US Subclass / CPC Group**	**Date**	**Examiner**
315	294	10/1/18	JV

Luminex v. Signify
Luminex Exhibit 1007
Page 089

INTERFERENCE SEARCH			
US Class/ CPC Symbol	**US Subclass / CPC Group**	**Date**	**Examiner**
USPAT, US-PGPUB	see interference search	10/1/18	JV

Luminex v. Signify
Luminex Exhibit 1007
Page 090

Issue Classification	Application/Control No.	Applicant(s)/Patent Under Reexamination
	16014394	BOWEN ET AL.
	Examiner	**Art Unit**
	JIMMY VU	2844

CPC						
Symbol					**Type**	**Version**
H05B		33	/	0863	F	2013-01-01
H05B		33	/	0845	I	2013-01-01
F21V		23	/	002	I	2013-01-01
F21V		17	/	12	I	2013-01-01
F21V		21	/	088	I	2013-01-01
F21S		8	/	026	I	2013-01-01
			/			
			/			
			/			
			/			
			/			
			/			
			/			
			/			
			/			

CPC Combination Sets								
Symbol					**Type**	**Set**	**Ranking**	**Version**
			/					
			/					

NONE (Assistant Examiner) (Date)		Total Claims Allowed: 20	
/JIMMY VU/ Primary Examiner.Art Unit 2844 (Primary Examiner)	10/01/18 (Date)	O.G. Print Claim(s) 1	O.G. Print Figure 1A

U.S. Patent and Trademark Office

Part of Paper No. 20181001

Issue Classification	Application/Control No.	Applicant(s)/Patent Under Reexamination
	16014394	BOWEN ET AL.
	Examiner	**Art Unit**
	JIMMY VU	2844

US ORIGINAL CLASSIFICATION		INTERNATIONAL CLASSIFICATION	
CLASS	SUBCLASS	CLAIMED	NON-CLAIMED
315	294	H 0 5 B 33 / 08 (2006.01.01)	

CROSS REFERENCE(S)					
CLASS	SUBCLASS (ONE SUBCLASS PER BLOCK)				

NONE (Assistant Examiner) (Date)	**Total Claims Allowed:** 20	
/JIMMY VU/ Primary Examiner.Art Unit 2844 10/01/18 (Primary Examiner) (Date)	O.G. Print Claim(s) 1	O.G. Print Figure 1A

U.S. Patent and Trademark Office Part of Paper No. 20181001

Issue Classification	Application/Control No.	Applicant(s)/Patent Under Reexamination
	16014394	BOWEN ET AL.
	Examiner	**Art Unit**
	JIMMY VU	2844

☒ **Claims renumbered in the same order as presented by applicant** ☐ **CPA** ☐ **T.D.** ☐ **R.1.47**

Final	Original	Final	Original	Final	Original	Final	Original	Final	Original	Final	Original	Final	Original	Final	Original
	1		17												
	2		18												
	3		19												
	4		20												
	5														
	6														
	7														
	8														
	9														
	10														
	11														
	12														
	13														
	14														
	15														
	16														

NONE (Assistant Examiner)	(Date)	**Total Claims Allowed:** 20	
/JIMMY VU/ Primary Examiner.Art Unit 2844 (Primary Examiner)	10/01/18 (Date)	O.G. Print Claim(s) 1	O.G. Print Figure 1A

U.S. Patent and Trademark Office

Part of Paper No. 20181001

UNITED STATES PATENT AND TRADEMARK OFFICE

UNITED STATES DEPARTMENT OF COMMERCE
United States Patent and Trademark Office
Address: COMMISSIONER FOR PATENTS
P.O. Box 1450
Alexandria, Virginia 22313-1450
www.uspto.gov

NOTICE OF ALLOWANCE AND FEE(S) DUE

91764 7590 10/16/2018
King & Spalding LLP (Eaton/Cooper)
ATTN: IP Docketing Department
1100 Louisiana Street, Suite 4000
Houston, TX 77002-5213

EXAMINER
VU, JIMMY T

ART UNIT	PAPER NUMBER
2844	

DATE MAILED: 10/16/2018

APPLICATION NO.	FILING DATE	FIRST NAMED INVENTOR	ATTORNEY DOCKET NO.	CONFIRMATION NO.
16/014,394	06/21/2018	John Edward Bowen	13682.227254	1994

TITLE OF INVENTION: CONFIGURABLE LIGHTING SYSTEM

APPLN. TYPE	ENTITY STATUS	ISSUE FEE DUE	PUBLICATION FEE DUE	PREV. PAID ISSUE FEE	TOTAL FEE(S) DUE	DATE DUE
nonprovisional	UNDISCOUNTED	$1000	$0	$0	$1000	01/16/2019

THE APPLICATION IDENTIFIED ABOVE HAS BEEN EXAMINED AND IS ALLOWED FOR ISSUANCE AS A PATENT. PROSECUTION ON THE MERITS IS CLOSED. THIS NOTICE OF ALLOWANCE IS NOT A GRANT OF PATENT RIGHTS. THIS APPLICATION IS SUBJECT TO WITHDRAWAL FROM ISSUE AT THE INITIATIVE OF THE OFFICE OR UPON PETITION BY THE APPLICANT. SEE 37 CFR 1.313 AND MPEP 1308.

THE ISSUE FEE AND PUBLICATION FEE (IF REQUIRED) MUST BE PAID WITHIN THREE MONTHS FROM THE MAILING DATE OF THIS NOTICE OR THIS APPLICATION SHALL BE REGARDED AS ABANDONED. THIS STATUTORY PERIOD CANNOT BE EXTENDED. SEE 35 U.S.C. 151. THE ISSUE FEE DUE INDICATED ABOVE DOES NOT REFLECT A CREDIT FOR ANY PREVIOUSLY PAID ISSUE FEE IN THIS APPLICATION. IF AN ISSUE FEE HAS PREVIOUSLY BEEN PAID IN THIS APPLICATION (AS SHOWN ABOVE), THE RETURN OF PART B OF THIS FORM WILL BE CONSIDERED A REQUEST TO REAPPLY THE PREVIOUSLY PAID ISSUE FEE TOWARD THE ISSUE FEE NOW DUE.

HOW TO REPLY TO THIS NOTICE:

I. Review the ENTITY STATUS shown above. If the ENTITY STATUS is shown as SMALL or MICRO, verify whether entitlement to that entity status still applies.

If the ENTITY STATUS is the same as shown above, pay the TOTAL FEE(S) DUE shown above.

If the ENTITY STATUS is changed from that shown above, on PART B - FEE(S) TRANSMITTAL, complete section number 5 titled "Change in Entity Status (from status indicated above)".

For purposes of this notice, small entity fees are 1/2 the amount of undiscounted fees, and micro entity fees are 1/2 the amount of small entity fees.

II. PART B - FEE(S) TRANSMITTAL, or its equivalent, must be completed and returned to the United States Patent and Trademark Office (USPTO) with your ISSUE FEE and PUBLICATION FEE (if required). If you are charging the fee(s) to your deposit account, section "4b" of Part B - Fee(s) Transmittal should be completed and an extra copy of the form should be submitted. If an equivalent of Part B is filed, a request to reapply a previously paid issue fee must be clearly made, and delays in processing may occur due to the difficulty in recognizing the paper as an equivalent of Part B.

III. All communications regarding this application must give the application number. Please direct all communications prior to issuance to Mail Stop ISSUE FEE unless advised to the contrary.

IMPORTANT REMINDER: Maintenance fees are due in utility patents issuing on applications filed on or after Dec. 12, 1980. It is patentee's responsibility to ensure timely payment of maintenance fees when due. More information is available at www.uspto.gov/PatentMaintenanceFees.

PTOL-85 (Rev. 02/11)

Luminex v. Signify
Luminex Exhibit 1007
Page 094

PART B - FEE(S) TRANSMITTAL

Complete and send this form, together with applicable fee(s), to: Mail **Mail Stop ISSUE FEE**
Commissioner for Patents
P.O. Box 1450
Alexandria, Virginia 22313-1450
or Fax (571)-273-2885

INSTRUCTIONS: This form should be used for transmitting the ISSUE FEE and PUBLICATION FEE (if required). Blocks 1 through 5 should be completed where appropriate. All further correspondence including the Patent, advance orders and notification of maintenance fees will be mailed to the current correspondence address as indicated unless corrected below or directed otherwise in Block 1, by (a) specifying a new correspondence address; and/or (b) indicating a separate "FEE ADDRESS" for maintenance fee notifications.

CURRENT CORRESPONDENCE ADDRESS (Note: Use Block 1 for any change of address)

91764 7590 10/16/2018
King & Spalding LLP (Eaton/Cooper)
ATTN: IP Docketing Department
1100 Louisiana Street, Suite 4000
Houston, TX 77002-5213

Note: A certificate of mailing can only be used for domestic mailings of the Fee(s) Transmittal. This certificate cannot be used for any other accompanying papers. Each additional paper, such as an assignment or formal drawing, must have its own certificate of mailing or transmission.

Certificate of Mailing or Transmission
I hereby certify that this Fee(s) Transmittal is being deposited with the United States Postal Service with sufficient postage for first class mail in an envelope addressed to the Mail Stop ISSUE FEE address above, or being facsimile transmitted to the USPTO (571) 273-2885, on the date indicated below.

(Depositor's name)
(Signature)
(Date)

APPLICATION NO.	FILING DATE	FIRST NAMED INVENTOR	ATTORNEY DOCKET NO.	CONFIRMATION NO.
16/014,394	06/21/2018	John Edward Bowen	13682.227254	1994

TITLE OF INVENTION: CONFIGURABLE LIGHTING SYSTEM

APPLN. TYPE	ENTITY STATUS	ISSUE FEE DUE	PUBLICATION FEE DUE	PREV. PAID ISSUE FEE	TOTAL FEE(S) DUE	DATE DUE
nonprovisional	UNDISCOUNTED	$1000	$0	$0	$1000	01/16/2019

EXAMINER	ART UNIT	CLASS-SUBCLASS
VU, JIMMY T	2844	315-294000

1. Change of correspondence address or indication of "Fee Address" (37 CFR 1.363).
❑ Change of correspondence address (or Change of Correspondence Address form PTO/SB/122) attached.
❑ "Fee Address" indication (or "Fee Address" Indication form PTO/SB/47; Rev 03-02 or more recent) attached. **Use of a Customer Number is required.**

2. For printing on the patent front page, list
(1) The names of up to 3 registered patent attorneys or agents OR, alternatively,
(2) The name of a single firm (having as a member a registered attorney or agent) and the names of up to 2 registered patent attorneys or agents. If no name is listed, no name will be printed.
1_____
2_____
3_____

3. ASSIGNEE NAME AND RESIDENCE DATA TO BE PRINTED ON THE PATENT (print or type)
PLEASE NOTE: Unless an assignee is identified below, no assignee data will appear on the patent. If an assignee is identified below, the document has been filed for recordation as set forth in 37 CFR 3.11. Completion of this form is NOT a substitute for filing an assignment.
(A) NAME OF ASSIGNEE (B) RESIDENCE: (CITY and STATE OR COUNTRY)

Please check the appropriate assignee category or categories (will not be printed on the patent) : ❑ Individual ❑ Corporation or other private group entity ❑ Government

4a. The following fee(s) are submitted:
❑ Issue Fee
❑ Publication Fee (No small entity discount permitted)
❑ Advance Order - # of Copies _____

4b. Payment of Fee(s): **(Please first reapply any previously paid issue fee shown above)**
❑ A check is enclosed.
❑ Payment by credit card. Form PTO-2038 is attached.
❑ The director is hereby authorized to charge the required fee(s), any deficiency, or credits any overpayment, to Deposit Account Number _____ (enclose an extra copy of this form).

5. **Change in Entity Status** (from status indicated above)
❑ Applicant certifying micro entity status. See 37 CFR 1.29 — NOTE: Absent a valid certification of Micro Entity Status (see forms PTO/SB/15A and 15B), issue fee payment in the micro entity amount will not be accepted at the risk of application abandonment.
❑ Applicant asserting small entity status. See 37 CFR 1.27 — NOTE: If the application was previously under micro entity status, checking this box will be taken to be a notification of loss of entitlement to micro entity status.
❑ Applicant changing to regular undiscounted fee status. — NOTE: Checking this box will be taken to be a notification of loss of entitlement to small or micro entity status, as applicable.

NOTE: This form must be signed in accordance with 37 CFR 1.31 and 1.33. See 37 CFR 1.4 for signature requirements and certifications.

Authorized Signature _____ Date _____
Typed or printed name _____ Registration No. _____

PTOL-85 Part B (10-13) Approved for use through 10/31/2013. OMB 0651-0033 U.S. Patent and Trademark Office; U.S. DEPARTMENT OF COMMERCE

Luminex v. Signify
Luminex Exhibit 1007
Page 095

UNITED STATES PATENT AND TRADEMARK OFFICE

UNITED STATES DEPARTMENT OF COMMERCE
United States Patent and Trademark Office
Address: COMMISSIONER FOR PATENTS
P.O. Box 1450
Alexandria, Virginia 22313-1450
www.uspto.gov

APPLICATION NO.	FILING DATE	FIRST NAMED INVENTOR	ATTORNEY DOCKET NO.	CONFIRMATION NO.
16/014,394	06/21/2018	John Edward Bowen	13682.227254	1994

91764 7590 10/16/2018
King & Spalding LLP (Eaton/Cooper)
ATTN: IP Docketing Department
1100 Louisiana Street, Suite 4000
Houston, TX 77002-5213

EXAMINER
VU, JIMMY T

ART UNIT	PAPER NUMBER
2844	

DATE MAILED: 10/16/2018

Determination of Patent Term Adjustment under 35 U.S.C. 154 (b)
(Applications filed on or after May 29, 2000)

The Office has discontinued providing a Patent Term Adjustment (PTA) calculation with the Notice of Allowance.

Section 1(h)(2) of the AIA Technical Corrections Act amended 35 U.S.C. 154(b)(3)(B)(i) to eliminate the requirement that the Office provide a patent term adjustment determination with the notice of allowance. See Revisions to Patent Term Adjustment, 78 Fed. Reg. 19416, 19417 (Apr. 1, 2013). Therefore, the Office is no longer providing an initial patent term adjustment determination with the notice of allowance. The Office will continue to provide a patent term adjustment determination with the Issue Notification Letter that is mailed to applicant approximately three weeks prior to the issue date of the patent, and will include the patent term adjustment on the patent. Any request for reconsideration of the patent term adjustment determination (or reinstatement of patent term adjustment) should follow the process outlined in 37 CFR 1.705.

Any questions regarding the Patent Term Extension or Adjustment determination should be directed to the Office of Patent Legal Administration at (571)-272-7702. Questions relating to issue and publication fee payments should be directed to the Customer Service Center of the Office of Patent Publication at 1-(888)-786-0101 or (571)-272-4200.

OMB Clearance and PRA Burden Statement for PTOL-85 Part B

The Paperwork Reduction Act (PRA) of 1995 requires Federal agencies to obtain Office of Management and Budget approval before requesting most types of information from the public. When OMB approves an agency request to collect information from the public, OMB (i) provides a valid OMB Control Number and expiration date for the agency to display on the instrument that will be used to collect the information and (ii) requires the agency to inform the public about the OMB Control Number's legal significance in accordance with 5 CFR 1320.5(b).

The information collected by PTOL-85 Part B is required by 37 CFR 1.311. The information is required to obtain or retain a benefit by the public which is to file (and by the USPTO to process) an application. Confidentiality is governed by 35 U.S.C. 122 and 37 CFR 1.14. This collection is estimated to take 12 minutes to complete, including gathering, preparing, and submitting the completed application form to the USPTO. Time will vary depending upon the individual case. Any comments on the amount of time you require to complete this form and/or suggestions for reducing this burden, should be sent to the Chief Information Officer, U.S. Patent and Trademark Office, U.S. Department of Commerce, P.O. Box 1450, Alexandria, Virginia 22313-1450. DO NOT SEND FEES OR COMPLETED FORMS TO THIS ADDRESS. SEND TO: Commissioner for Patents, P.O. Box 1450, Alexandria, Virginia 22313-1450. Under the Paperwork Reduction Act of 1995, no persons are required to respond to a collection of information unless it displays a valid OMB control number.

Privacy Act Statement

The Privacy Act of 1974 (P.L. 93-579) requires that you be given certain information in connection with your submission of the attached form related to a patent application or patent. Accordingly, pursuant to the requirements of the Act, please be advised that: (1) the general authority for the collection of this information is 35 U.S.C. 2(b)(2); (2) furnishing of the information solicited is voluntary; and (3) the principal purpose for which the information is used by the U.S. Patent and Trademark Office is to process and/or examine your submission related to a patent application or patent. If you do not furnish the requested information, the U.S. Patent and Trademark Office may not be able to process and/or examine your submission, which may result in termination of proceedings or abandonment of the application or expiration of the patent.

The information provided by you in this form will be subject to the following routine uses:

1. The information on this form will be treated confidentially to the extent allowed under the Freedom of Information Act (5 U.S.C. 552) and the Privacy Act (5 U.S.C 552a). Records from this system of records may be disclosed to the Department of Justice to determine whether disclosure of these records is required by the Freedom of Information Act.
2. A record from this system of records may be disclosed, as a routine use, in the course of presenting evidence to a court, magistrate, or administrative tribunal, including disclosures to opposing counsel in the course of settlement negotiations.
3. A record in this system of records may be disclosed, as a routine use, to a Member of Congress submitting a request involving an individual, to whom the record pertains, when the individual has requested assistance from the Member with respect to the subject matter of the record.
4. A record in this system of records may be disclosed, as a routine use, to a contractor of the Agency having need for the information in order to perform a contract. Recipients of information shall be required to comply with the requirements of the Privacy Act of 1974, as amended, pursuant to 5 U.S.C. 552a(m).
5. A record related to an International Application filed under the Patent Cooperation Treaty in this system of records may be disclosed, as a routine use, to the International Bureau of the World Intellectual Property Organization, pursuant to the Patent Cooperation Treaty.
6. A record in this system of records may be disclosed, as a routine use, to another federal agency for purposes of National Security review (35 U.S.C. 181) and for review pursuant to the Atomic Energy Act (42 U.S.C. 218(c)).
7. A record from this system of records may be disclosed, as a routine use, to the Administrator, General Services, or his/her designee, during an inspection of records conducted by GSA as part of that agency's responsibility to recommend improvements in records management practices and programs, under authority of 44 U.S.C. 2904 and 2906. Such disclosure shall be made in accordance with the GSA regulations governing inspection of records for this purpose, and any other relevant (i.e., GSA or Commerce) directive. Such disclosure shall not be used to make determinations about individuals.
8. A record from this system of records may be disclosed, as a routine use, to the public after either publication of the application pursuant to 35 U.S.C. 122(b) or issuance of a patent pursuant to 35 U.S.C. 151. Further, a record may be disclosed, subject to the limitations of 37 CFR 1.14, as a routine use, to the public if the record was filed in an application which became abandoned or in which the proceedings were terminated and which application is referenced by either a published application, an application open to public inspection or an issued patent.
9. A record from this system of records may be disclosed, as a routine use, to a Federal, State, or local law enforcement agency, if the USPTO becomes aware of a violation or potential violation of law or regulation.

Notice of Allowability	Application No. 16/014,394	Applicant(s) BOWEN ET AL.	
	Examiner JIMMY VU	Art Unit 2844	AIA (First Inventor to File) Status Yes

-- The MAILING DATE of this communication appears on the cover sheet with the correspondence address--

All claims being allowable, PROSECUTION ON THE MERITS IS (OR REMAINS) CLOSED in this application. If not included herewith (or previously mailed), a Notice of Allowance (PTOL-85) or other appropriate communication will be mailed in due course. **THIS NOTICE OF ALLOWABILITY IS NOT A GRANT OF PATENT RIGHTS.** This application is subject to withdrawal from issue at the initiative of the Office or upon petition by the applicant. See 37 CFR 1.313 and MPEP 1308.

1. ☒ This communication is responsive to *communication filed on 06/21/2018*.
   ☐ A declaration(s)/affidavit(s) under **37 CFR 1.130(b)** was/were filed on_____.
2. ☐ An election was made by the applicant in response to a restriction requirement set forth during the interview on _____; the restriction requirement and election have been incorporated into this action.
3. ☒ The allowed claim(s) is/are *1-20*. As a result of the allowed claim(s), you may be eligible to benefit from the **Patent Prosecution Highway** program at a participating intellectual property office for the corresponding application. For more information, please see http://www.uspto.gov/patents/init_events/pph/index.jsp or send an inquiry to PPHfeedback@uspto.gov.
4. ☐ Acknowledgment is made of a claim for foreign priority under 35 U.S.C. § 119(a)-(d) or (f).

   Certified copies:

   a) ☐ All b) ☐ Some *c) ☐ None of the:
   1. ☐ Certified copies of the priority documents have been received.
   2. ☐ Certified copies of the priority documents have been received in Application No. _____ .
   3. ☐ Copies of the certified copies of the priority documents have been received in this national stage application from the International Bureau (PCT Rule 17.2(a)).

   * Certified copies not received: _____.

Applicant has THREE MONTHS FROM THE "MAILING DATE" of this communication to file a reply complying with the requirements noted below. Failure to timely comply will result in ABANDONMENT of this application.
THIS THREE-MONTH PERIOD IS NOT EXTENDABLE.

5. ☐ CORRECTED DRAWINGS (as "replacement sheets") must be submitted.
   ☐ including changes required by the attached Examiner's Amendment / Comment or in the Office action of Paper No./Mail Date _____.

   Identifying indicia such as the application number (see 37 CFR 1.84(c)) should be written on the drawings in the front (not the back) of each sheet. Replacement sheet(s) should be labeled as such in the header according to 37 CFR 1.121(d).
6. ☐ DEPOSIT OF and/or INFORMATION about the deposit of BIOLOGICAL MATERIAL must be submitted. Note the attached Examiner's comment regarding REQUIREMENT FOR THE DEPOSIT OF BIOLOGICAL MATERIAL.

Attachment(s)

1. ☒ Notice of References Cited (PTO-892)
2. ☒ Information Disclosure Statements (PTO/SB/08), Paper No./Mail Date 7/26/18
3. ☐ Examiner's Comment Regarding Requirement for Deposit of Biological Material
4. ☐ Interview Summary (PTO-413), Paper No./Mail Date _____ .
5. ☒ Examiner's Amendment/Comment
6. ☒ Examiner's Statement of Reasons for Allowance
7. ☐ Other _____.

/JIMMY VU/
Primary Examiner, Art Unit 2844

Luminex v. Signify
Luminex Exhibit 1007
Page 098

DETAILED ACTION

Examiner's Comment

This Office Action is in response to the Applicant's communication filed on 06/21/2018. In virtue of the communication:

Claims 1-20 are present in the instant application.

The references cited in the Information Disclosure Statement(s) (IDS's) filed on 07/26/2018 have been considered by the examiner.

The present application, filed on or after March 16, 2013, is being examined under the first inventor to file provisions of the AIA.

Examiner's Statement of Reasons for Allowance

Claims **1-20** are allowed.

The primary reasons for the allowance of the claims are in the inclusion of the limitation(s):

"*... an electrical cable comprising a first end and a second end, wherein the first end is coupled to the at least one electrical component; and a switch coupled to the electrical cable, wherein the switch is disposed remotely from the housing, wherein the switch has a plurality of positions, wherein each position of the plurality of positions of the switch corresponds to a discrete correlated color temperature (CCT) output by one or more light sources of the luminaire*" and combination thereof, in the claim(s), i.e., claim 1, (claims 2-12 are allowed as being dependent on claim 1), and

"*... at least one first coupling feature disposed on the body, wherein the at least one first coupling feature is configured to electrically couple to an electrical cable of the luminaire; and*

an actuator disposed on the body, wherein the actuator has a range of positions, wherein each position of the range of positions of the actuator corresponds to a CCT of the light emitted by the luminaire" and combination thereof, in the claim(s), i.e., claim 13, (claims 14-20 are allowed as being dependent on claim 13), which are not found in the prior art references.

The prior art made of record and relied upon is considered pertinent to applicant's disclosure. The best consider with this application can be filed in Yan (U.S. Patent 8,598,793 B2).

Any comments considered necessary by applicant must be submitted no later than the payment of the issue fee and, to avoid processing delays, should preferably accompany the issue fee. Such submissions should be clearly labeled "Comments on Statement of Reasons for Allowance."

Inquiry

Any inquiry concerning this communication or earlier communications from the examiner should be directed to Jimmy T Vu whose telephone number is (571) 272-1832. The examiner can normally be reached on M - F: 9 - 6:00.

If attempts to reach the examiner by telephone are unsuccessful, the examiner's supervisor, Douglas Owens can be reached on (571) 272-1662. The fax phone numbers for the organization where this application or proceeding is assigned are (571) 273-8300.

Any inquiry of a general nature or relating to the status of this application or proceeding should be directed to the receptionist whose telephone number is (571) 272-2800.

/JIMMY VU/
Primary Examiner, Art Unit 2844

PTO/SB/08A (08-03)
Approved for use through 07/31/2006. OMB 0651-0031
U.S. Patent and Trademark Office: U.S. DEPARTMENT OF COMMERCE
Under the Paperwork Reduction Act of 1995, no persons are required to respond to a collection of information unless it contains a valid OMB control number.

Substitute for form 1449A/PTO

INFORMATION DISCLOSURE STATEMENT BY APPLICANT

(use as many sheets as necessary)

Sheet	1	of	1

Complete if Known	
Application Number	**16/014395**
Filing Date	**June 21, 2018**
First Named Inventor	**Steven Walter Pyshos**
Group Art Unit	**Not yet assigned**
Examiner Name	**Not yet assigned**
Attorney Docket Number	**13682.227254**

U.S. PATENT DOCUMENTS

Examiner Initials *	Cite No. [1]	U.S. Patent Document Number	Kind Code [2] (if known)	Name of Patentee or Applicant of Cited Document	Date of Publication of Cited Document MM-DD- YYYY	Pages, Columns, Lines, Where Relevant Passages or Relevant Figures Appear
	1	8941312		McRae	01-27-2015	
	2	9892693		Kumar	02-13-2018	
	3	20150054410		Sanders, Chad N.	02-26-2015	
	4	8172415		Wegh, Rene Theodorus	05-08-2012	
	5	7416312		McDermott	08-26-2008	
	6	8317362		Ku et al.	11-27-2012	
	7	20140210357		Yan et al.	07-31-2014	
	8	20060220586		Latham	10-05-2006	
	9	20170086265		Akiyama et al.	03-23-2017	
	10	20170019973		Beck et al.	01-19-2017	
	11	8598793		Yan, Xiantao	12-03-2013	
	12	2014/0210376		Hicks, IV; Roy	07-31-2014	
	13	9820350		Pyshos	11-14-2017	

FOREIGN PATENT DOCUMENTS

Examiner Initials *	Cite No. [1]	Foreign Patent Document Office [3]	Number	Kind Code [2] (if known)	Name of Patentee or Applicant of Cited Document	Date of Publication of Cited Document MM-DD- YYYY	Pages, Columns, Lines, Where Relevant Passages or Relevant Figures Appear	T [6]

OTHER PRIOR ART – NON PATENT LITERATURE DOCUMENTS

Examiner Initials *	Cite No. [1]	Include name of the author (in CAPITAL LETTERS), title of the article (when appropriate), title of the item (book, magazine, journal, serial, symposium, catalog, etc.), date, page(s), volume-issue number(s), publisher, city and/or country where published.	T [6]
	14	Test Report of California Appliance Efficiency Compliance for Permanently Installed High Efficacy LEDs under Title 24, issued November 18, 2015	
	15	Energy Star, Certificate of Compliance; Certificate No. 1129756, issued 11/25/2015	
	16	Test Report of IES LM-79-08; Approved Method: Electrical and Photometric Measurements of Solid-State Lighting Products; issued November 18, 2015	

Examiner Signature	/JIMMY T VU/	Date Considered	09/30/2018

*EXAMINER: Initial if reference considered, whether or not citation is in conformance with MPEP 609. Draw line through citation if not in conformance and not considered. Include copy of this form with next communication to applicant.

[1] Unique citation designation number. [2] See attached Kinds of U.S. Patent Documents. [3] Enter Office that issued the document, by the two-letter code (WIPO Standard ST.3). [4] For Japanese patent documents, the indication of the year of the reign of the Emperor must precede the serial number of the patent document. [5] Kind of document by the appropriate symbols as indicated on the document under WIPO Standard ST. 16 if possible. [6] Applicant is to place a check mark here if English language Translation is attached.

Burden Hour Statement: This form is estimated to take 2.0 hours to complete. Time will vary depending upon the needs of the individual case. Any comments on the amount of time you are required to complete this form should be sent to the Chief Information Officer, U. S. Patent and Trademark Office, Washington, DC 20231. DO NOT SEND FEES OR COMPLETED FORMS TO THIS ADDRESS. SEND TO: Assistant Commissioner for Patents, Washington, DC 20231.

ALL REFERENCES CONSIDERED EXCEPT WHERE LINED THROUGH. /J.T.V/

EAST Search History

EAST Search History (Prior Art)

Ref #	Hits	Search Query	DBs	Default Operator	Plurals	Time Stamp
S1	6	15/435141	US-PGPUB; USPAT; USOCR; FPRS; EPO; JPO; DERWENT; IBM_TDB	OR	ON	2018/09/30 22:27
S2	9	("20060220586" | "20140210357" | "20150054410" | "20170019973" | "20170086265" | "7416312" | "8172415" | "8317362" | "8598793").PN. OR ("9892693").URPN.	US-PGPUB; USPAT; USOCR	OR	OFF	2018/09/30 22:42
S3	173944	((light$3|lamp$1|LED$1|luminaire) and ((color|colour) with temperature)	US-PGPUB; USPAT; USOCR; FPRS; EPO; JPO; DERWENT; IBM_TDB	OR	ON	2018/09/30 22:44
S4	222	S3 and (switch$3 with electrical with cable with (connect$3|coupl$3))	US-PGPUB; USPAT; USOCR; FPRS; EPO; JPO; DERWENT; IBM_TDB	OR	ON	2018/09/30 22:45
S5	26	S4 and (actuat$3 with position$3)	US-PGPUB; USPAT; USOCR; FPRS; EPO; JPO; DERWENT; IBM_TDB	OR	ON	2018/09/30 22:46
S6	17	(7426312|8317362|20140210357|20060220586|20170086265|20170019973).pn.	US-PGPUB; USPAT; USOCR; FPRS; EPO; JPO; DERWENT; IBM_TDB	OR	ON	2018/09/30 22:48
S7	8	("20030147239" | "20080151542" | "20090316412" | "20090323333" | "6905228" | "7416312").PN. OR ("8317362").URPN.	US-PGPUB; USPAT; USOCR	OR	OFF	2018/09/30 22:48
S8	8	("7416312").URPN.	USPAT	OR	OFF	2018/09/30 22:49
S9	293	((light$3|lamp$1|LED$1|luminaire) and ((color|colour) with temperature) and (control$4 with light$3 with (channel$1|state$1) with first with second with third)	US-PGPUB; USPAT; USOCR; FPRS; EPO; JPO; DERWENT; IBM_TDB	OR	ON	2018/09/30 22:56
S10	58	S9 and 315/151,185R,209R,291,294,307,308,312.ccls.	US-PGPUB; USPAT; USOCR; FPRS; EPO; JPO; DERWENT; IBM_TDB	OR	ON	2018/09/30 22:56
S11	0	S10 and (actuat$3 with position$3)	US-PGPUB; USPAT; USOCR; FPRS; EPO; JPO;	OR	ON	2018/09/30 23:10

			DERWENT; IBM_TDB			
S12	29	(light$3|lamp$1|LED$1|luminaire) and ((color|colour) with temperature) and (switch$3 with (feature|fin$1) with cable)	US-PGPUB; USPAT; USOCR; FPRS; EPO; JPO; DERWENT; IBM_TDB	OR	ON	2018/09/30 23:11
S13	0	S12 and 315/$.ccls.	US-PGPUB; USPAT; USOCR; FPRS; EPO; JPO; DERWENT; IBM_TDB	OR	ON	2018/09/30 23:11
S14	12854	(light$3|lamp$1|LED$1|luminaire) and (actuat$3 with rang$3 with position$3)	US-PGPUB; USPAT; USOCR; FPRS; EPO; JPO; DERWENT; IBM_TDB	OR	ON	2018/09/30 23:13
S15	149	S14 and ((color|colour) with temperature)	US-PGPUB; USPAT; USOCR; FPRS; EPO; JPO; DERWENT; IBM_TDB	OR	ON	2018/09/30 23:13
S16	6	S15 and 315/$.ccls.	US-PGPUB; USPAT; USOCR; FPRS; EPO; JPO; DERWENT; IBM_TDB	OR	ON	2018/09/30 23:13
S17	163623	((H05B37/02|H05B33/08|H05B33/0845|H05B33/0863|F21K9/62|F21S8/026|F21V3/02|F21V5/04|F21V7/00|F21V17/12|F21V21/088|F21V23/001|F21Y2113/13|F21Y2115/10).cpc.	US-PGPUB; USPAT; USOCR; FPRS; EPO; JPO; DERWENT; IBM_TDB	OR	ON	2018/09/30 23:15
S18	10576	S17 and (light$3|lamp$1|LED$1|luminaire) and ((color|colour) with temperature)	US-PGPUB; USPAT; USOCR; FPRS; EPO; JPO; DERWENT; IBM_TDB	OR	ON	2018/09/30 23:15
S19	15	S18 and (switch$3 with electrical with cable with (connect$3|coupl$3))	US-PGPUB; USPAT; USOCR; FPRS; EPO; JPO; DERWENT; IBM_TDB	OR	ON	2018/09/30 23:15
S20	6	S18 and (actuat$3 with rang$3 with position$3)	US-PGPUB; USPAT; USOCR; FPRS; EPO; JPO; DERWENT; IBM_TDB	OR	ON	2018/09/30 23:16
S21	229	("20020084767" | "20030016143" | "20030184672" | "20040192227" | "20050174780" | "20050231133" | "20050243022" | "20060001384" | "20060014118" | "20060056172" | "20060066264" | "20060098440" | "20060146652" | "20060208667" | "20070032990" | "20070102033" | "20070153550" | "20070164689" | "20070224461" | "20070225933" | "20070230183" | "20070247853" | "20070279921" | "20080018261" | "20080043106" | "20080094000" | "20080106907" | "20080130304" | "20080205068" | "20080215279" | "20080224623" | "20080232116" | "20080248837" | "20080266839" | "20090046151" | "20090058320" | "20090109625" | "20090129067" | "20090153062" | "20090160358" | "20090161356" | "20090167203" | "20090195179" | "20090230883" | "20090235208" | "20090261735" | "20090268023" | "20090273290" | "20090278479" | "20090284155" | "20090315485" | "20100001652" | "20100052557" | "20100096460" | "20100123403" | "20100149822" | "20100164406" | "20100171442" | "20100259193" | "20100270945" | "20100271802" | "20100277082" | "20100295454" | "20100295455" | "20100295946" | "20100309310" | "20100328946" | "20110001626" | "20110006703" | "20110026264" | "20110175518" | "20110204845" | "20110215731" | "20110221346" | "20110248812" | "20110251751" | "20110310605" | "20120001566" | "20120019971" | "20120038490" | "20120119669" | "20120119682" | "20120143383" | "20120153854" | "20120169053" | "20120181935" | "20120209755" | "20120221154" | "20120224363" | "20120242254" | "20120262069" | "20120320584" | "20130033183").PN. OR ("20130043792" | "20130049613" | "20130126715" | "20130131882" | "20130141000" | "20130141010" | "20130154488" | "20130193857" | "20130235202" | "20130249429" | "20130249479" | "20130340353" | "20140001961" | "20140070964" | "20140078308" | "20140097759" | "20140203714" | "20140244044" | "20140265894" | "20140313719" | "20150015716" | "20150077019" | "20150280782" | "20150312983" | "2745055" | "3374396" | "4153927" | "4237377" | "4663521" | "4811176" | "5086379" | "5160202" | "5161107" | "5230556" | "5276385" | "5343121" | "5349505" | "5450302" | "5561351" | "5589741" | "5808294"	US-PGPUB; USPAT; USOCR	OR	OFF	2018/09/30 23:17

		"5838226" | "5869960" | "5892331" | "5892335" | "5936362" | "6111739" | "6149283" | "6154015" | "6377191" | "6612720" | "6674060" | "6681195" | "6746274" | "6753842" | "6828911" | "6841947" | "6902292" | "6985827" | "7019276" | "7066622" | "7081722" | "7122976" | "7188967" | "7190121" | "7196477" | "7239087" | "7252385" | "7258464" | "7281820" | "7294973" | "7314291" | "7317403" | "7322714" | "7330568" | "7339323" | "7339471" | "7405524" | "7438440" | "7440280" | "7461964" | "7468723" | "7524089" | "7538499" | "7547113" | "7559674" | "7564198" | "7569802" | "7578596" | "7578597" | "7581856" | "7627372" | "7631324" | "7633463" | "7638743" | "7677753" | "7688002" | "7688222" | "7703951" | "7746003" | "7798669" | "7804200" | "7834922" | "7932535" | "7940191" | "7952609" | "7960919" | "7983817" | "7985005" | "8057070" | "8100552" | "8118456" | "8143769" | "8174212" | "8207830" | "8334640" | "8344665").PN. OR ("8376583" | "8395329" | "8445826" | "8476565" | "8586902" | "8604701" | "8637877" | "8749635" | "8764237" | "8779340" | "8779686" | "8866582" | "8872430" | "8884203" | "8921751" | "D621410" | "D621411").PN. OR ("9360198").URPN.				
S22	8	S21 and (actuat$3 with position$3)	US-PGPUB; USPAT; USOCR; FPRS; EPO; JPO; DERWENT; IBM_TDB	OR	ON	2018/09/30 23:18
S23	0	(((("Bowen") near3 ("John") near3 ("Edward"))).INV.	US-PGPUB; USPAT; USOCR	OR	OFF	2018/09/30 23:18
S24	31	(((("Janik") near3 ("Raymond"))).INV.	US-PGPUB; USPAT; USOCR	OR	OFF	2018/09/30 23:18

EAST Search History (Interference)

Ref #	Hits	Search Query	DBs	Default Operator	Plurals	Time Stamp
S25	8977	((light$3|lamp$1|LED$1|luminaire) and ((color|colour) with temperature)).clm.	US-PGPUB; USPAT	OR	ON	2018/10/01 02:44
S26	3	((light$3|lamp$1|LED$1|luminaire) and ((color|colour) with temperature) and (actuat$3 with rang$3 with position$3)).clm.	US-PGPUB; USPAT	OR	ON	2018/10/01 02:45
S27	2	((light$3|lamp$1|LED$1|luminaire) and ((color|colour) with temperature) and (switch$3 with electrical with cable with (connect$3|coupl$3))).clm.	US-PGPUB; USPAT	OR	ON	2018/10/01 02:45

10/1/2018 3:15:05 AM
C:\Users\jvu\Documents\EAST\Workspaces\6014394.wsp

Index of Claims	Application/Control No.	Applicant(s)/Patent Under Reexamination
	16014394	BOWEN ET AL.
	Examiner	**Art Unit**
	JIMMY VU	2844

✓	Rejected	-	Cancelled	N	Non-Elected	A	Appeal
=	Allowed	÷	Restricted	I	Interference	O	Objected

☒ Claims renumbered in the same order as presented by applicant ☐ CPA ☐ T.D. ☐ R.1.47

CLAIM		DATE								
Final	Original	10/01/2018								
	1	=								
	2	=								
	3	=								
	4	=								
	5	=								
	6	=								
	7	=								
	8	=								
	9	=								
	10	=								
	11	=								
	12	=								
	13	=								
	14	=								
	15	=								
	16	=								
	17	=								
	18	=								
	19	=								
	20	=								

Notice of References Cited	Application/Control No. 16/014,394	Applicant(s)/Patent Under Reexamination BOWEN ET AL.	
	Examiner JIMMY VU	Art Unit 2844	Page 1 of 1

U.S. PATENT DOCUMENTS

*		Document Number Country Code-Number-Kind Code	Date MM-YYYY	Name	CPC Classification	US Classification
*	A	US-8,598,793 B2	12-2013	Yan; Xiantao	H05B33/0869	315/151
	B	US-				
	C	US-				
	D	US-				
	E	US-				
	F	US-				
	G	US-				
	H	US-				
	I	US-				
	J	US-				
	K	US-				
	L	US-				
	M	US-				

FOREIGN PATENT DOCUMENTS

*		Document Number Country Code-Number-Kind Code	Date MM-YYYY	Country	Name	CPC Classification
	N					
	O					
	P					
	Q					
	R					
	S					
	T					

NON-PATENT DOCUMENTS

*		Include as applicable: Author, Title Date, Publisher, Edition or Volume, Pertinent Pages)
	U	
	V	
	W	
	X	

*A copy of this reference is not being furnished with this Office action. (See MPEP § 707.05(a).)
Dates in MM-YYYY format are publication dates. Classifications may be US or foreign.

IN THE UNITED STATES PATENT AND TRADEMARK OFFICE

In re Application of:	§	
Steven Walter Pyshos	§	Confirmation No.: **1994**
	§	
Application Serial No: **16/014,394**	§	Group Art Unit: **2844**
	§	
Filed: **06-21-2018**	§	Examiner: **VU, JIMMY T**
	§	
For: **Configurable Lighting System**	§	Attorney Docket: **13682.227254**

INFORMATION DISCLOSURE STATEMENT

Commissioner for Patents
P.O. Box 1450
Alexandria, VA 22313-1450

Sir:

This Information Disclosure Statement is filed in accordance with 37 C.F.R. §§1.56, 1.97 and 1.98. The items listed on Form SB/08B are made of record to assist the Patent and Trademark Office in its examination of this application. The Examiner is respectfully requested to fully consider the items and to independently ascertain their teaching.

1. ☐ For each of the following items listed on the enclosed copy of Form SB/08B that is not in the English language, an English language translation of that item or a portion thereof or a concise explanation of the relevance of that item is enclosed:

2. ☐ For each of the following items listed on the enclosed copy of Form SB/08B that is not in the English language, a concise explanation of the relevance of that item is provided:

3. ☐ Any copy of the items listed on the enclosed copy of Form SB/08B that is not enclosed with this Information Disclosure Statement was previously cited by or submitted to the Patent and Trademark Office in application Serial No.

4. ☐ No fee is due under 37 C.F.R. §1.17(p) for this Information Disclosure Statement since it is being filed in compliance with:

   ☐ 37 C.F.R. §1.97(b)(1), within three months of the filing date of a national application other than a CPA; or

   ☐ 37 C.F.R. §1.97(b)(2), within three months of the date of entry into the national stage as set forth in §1.491 in an international application; or

☐ 37 C.F.R. §1.97(b)(3), before the mailing date of a first Office action on the merits; or

☐ 37 C.F.R. §1.97(b)(4) before the mailing date of a first office action after the filing of an RCE under §1.114

5. ☐ No fee is due under 37 C.F.R. §1.17(p) for this Supplemental Information Disclosure Statement since it is being filed in compliance with 37 C.F.R. §1.97(c), after the period specified in paragraph 4 above but before the mailing date of a final action or a Notice of Allowance (where there has been no prior final action), and is accompanied by one of the certifications pursuant to 37 C.F.R. §1.97(e) set forth in paragraph 9 below.

6. ☐ A fee is due under 37 C.F.R. §1.17(p) for this Supplemental Information Disclosure Statement since it is being filed in compliance with 37 C.F.R. §1.97(c), after the period specified in paragraph 4 above but before the mailing date of a final action or a notice of allowance (where there has been no prior final action):

☐ Payment of $240.00 is being made with a credit card via EFS-Web.

☐ Charge the fee to Deposit Account No.11-0980, Order No._____.

7. ☒ A fee is due under 37 C.F.R. §1.17(p) for this Supplemental Information Disclosure Statement since it is being filed in compliance with 37 C.F.R. §1.97(d), after the mailing date of a final action or a notice of allowance, whichever comes first, but before payment of the issue fee, and is accompanied by:

a. one of the certifications pursuant to 37 C.F.R. §1.97(e) set forth in paragraph 9 below; and

b. the fee due under 37 C.F.R. §1.17(p) which is paid as set forth in paragraph 11 below.

8. ☐ This Supplemental Information Disclosure Statement is being filed in compliance with:

a. ☐ 37 C.F.R. §1.313(b)(3) or §1.313(c)(1), after the issue fee has been paid and information cited in this Supplemental Information Disclosure Statement may render at least one claim unpatentable and is accompanied by the attached Petition To Withdraw Application From Issue and fee pursuant to 37 C.F.R. §1.17(h);

b. ☐ 37 C.F.R. §1.313(c)(2) or §1.313(c)(3), after the issue fee has been paid and information cited in this Supplemental Information Disclosure Statement is to be considered in a Request for Continued Examination (RCE) or a Continuation application upon abandonment of the instant application and is accompanied by the attached Petition To Withdraw Application From Issue and fee pursuant to 37 C.F.R. §1.17(h).

c. ☐ The fee due under 37 C.F.R. §§1.17(h) is paid as set forth in paragraph 11 below.

9. ☐ I hereby certify that each item of information contained in this Supplemental Information Disclosure Statement was first cited in a communication from a foreign patent office in a counterpart foreign application not more than three months prior to the filing of this Supplemental Information Disclosure Statement.

☒ I hereby certify that no item of information in the Supplemental Information Disclosure Statement filed herewith was cited in a communication from a foreign patent office in a counterpart foreign application or, to my knowledge after making reasonable inquiry, was known to any individual designated in §1.56(c) more than three months prior to the filing of this Supplemental Information Disclosure Statement.

10. ☐ This document is accompanied by ☐ a Search Report ☐ Communication which was cited in a corresponding ☐ PCT or ☐ Foreign counterpart application.

11. ☒ Charge any fees due under 37 C.F.R. §§1.17(h) and 1.17(p) to Deposit Account No.-110980.

☒ The Commissioner is hereby authorized to charge any additional fees which may be required for this Information Disclosure Statement, or credit any overpayment to Deposit Account No. 11-0980.

Respectfully submitted,
KING & SPALDING LLP

/Robert T. Neufeld/
Robert T. Neufeld
Reg. No. 48394

Correspondence Address:
King & Spalding LLP
1180 Peachtree Street
Atlanta, GA 30309
404-572-4600 Telephone
404-572-5100 Facsimile

Electronic Patent Application Fee Transmittal

Application Number:	16014394
Filing Date:	21-Jun-2018
Title of Invention:	CONFIGURABLE LIGHTING SYSTEM
First Named Inventor/Applicant Name:	John Edward Bowen
Filer:	Robert Timothy Neufeld
Attorney Docket Number:	13682.227254

Filed as Large Entity

Filing Fees for Utility under 35 USC 111(a)

Description	Fee Code	Quantity	Amount	Sub-Total in USD($)
Basic Filing:				
Pages:				
Claims:				
Miscellaneous-Filing:				
Petition:				
Patent-Appeals-and-Interference:				
Post-Allowance-and-Post-Issuance:				
Extension-of-Time:				

Description	Fee Code	Quantity	Amount	Sub-Total in USD($)
Miscellaneous:				
SUBMISSION- INFORMATION DISCLOSURE STMT	1806	1	240	240
		Total in USD ($)		**240**

PTO/SB/08A (08-03)
Approved for use through 07/31/2006. OMB 0651-0031
U.S. Patent and Trademark Office: U.S. DEPARTMENT OF COMMERCE
Under the Paperwork Reduction Act of 1995, no persons are required to respond to a collection of information unless it contains a valid OMB control number.

Substitute for form 1449A/PTO

INFORMATION DISCLOSURE STATEMENT BY APPLICANT

(use as many sheets as necessary)

Sheet	1	of	1

Complete if Known	
Application Number	**16/014395**
Filing Date	**June 21, 2018**
First Named Inventor	**Steven Walter Pyshos**
Group Art Unit	**2844**
Examiner Name	**VU, JIMMY T**
Attorney Docket Number	**13682.227254**

U.S. PATENT DOCUMENTS

Examiner Initials *	Cite No. [1]	U.S. Patent Document Number	Kind Code [2] (if known)	Name of Patentee or Applicant of Cited Document	Date of Publication of Cited Document MM-DD- YYYY	Pages, Columns, Lines, Where Relevant Passages or Relevant Figures Appear
	1	7926300		Roberts	04-19-2011	
	2	8872438		Zhou	10-28-2014	
	3	2013/0328503		Toda	12-12-2013	
	4	8598793		Yan	12-03-2013	

FOREIGN PATENT DOCUMENTS

Examiner Initials *	Cite No. [1]	Foreign Patent Document Office [3]	Number	Kind Code [2] (if known)	Name of Patentee or Applicant of Cited Document	Date of Publication of Cited Document MM-DD- YYYY	Pages, Columns, Lines, Where Relevant Passages or Relevant Figures Appear	T [6]

OTHER PRIOR ART – NON PATENT LITERATURE DOCUMENTS

Examiner Initials *	Cite No. [1]	Include name of the author (in CAPITAL LETTERS), title of the article (when appropriate), title of the item (book, magazine, journal, serial, symposium, catalog, etc.), date, page(s), volume-issue number(s), publisher, city and/or country where published.	T [6]

Examiner Signature		Date Considered	

*EXAMINER: Initial if reference considered, whether or not citation is in conformance with MPEP 609. Draw line through citation if not in conformance and not considered. Include copy of this form with next communication to applicant.

[1] Unique citation designation number. [2] See attached Kinds of U.S. Patent Documents. [3] Enter Office that issued the document, by the two-letter code (WIPO Standard ST.3). [4] For Japanese patent documents, the indication of the year of the reign of the Emperor must precede the serial number of the patent document. [5] Kind of document by the appropriate symbols as indicated on the document under WIPO Standard ST. 16 if possible. [6] Applicant is to place a check mark here if English language Translation is attached.

Burden Hour Statement: This form is estimated to take 2.0 hours to complete. Time will vary depending upon the needs of the individual case. Any comments on the amount of time you are required to complete this form should be sent to the Chief Information Officer, U. S. Patent and Trademark Office, Washington, DC 20231. DO NOT SEND FEES OR COMPLETED FORMS TO THIS ADDRESS. SEND TO: Assistant Commissioner for Patents, Washington, DC 20231.

Electronic Acknowledgement Receipt

EFS ID:	34061231
Application Number:	16014394
International Application Number:	
Confirmation Number:	1994
Title of Invention:	CONFIGURABLE LIGHTING SYSTEM
First Named Inventor/Applicant Name:	John Edward Bowen
Customer Number:	91764
Filer:	Robert Timothy Neufeld
Filer Authorized By:	
Attorney Docket Number:	13682.227254
Receipt Date:	22-OCT-2018
Filing Date:	21-JUN-2018
Time Stamp:	17:30:04
Application Type:	Utility under 35 USC 111(a)

Payment information:

Submitted with Payment	yes
Payment Type	CARD
Payment was successfully received in RAM	$240
RAM confirmation Number	102318INTEFSW17302800
Deposit Account	
Authorized User	
The Director of the USPTO is hereby authorized to charge indicated fees and credit any overpayment as follows:	

File Listing:

Document Number	Document Description	File Name	File Size(Bytes)/ Message Digest	Multi Part /.zip	Pages (if appl.)
1	Transmittal Letter	227254long.pdf	89157 f77d2acac75280bf389c131496e3166ba6669833	no	3
Warnings:					
Information:					
2	Information Disclosure Statement (IDS) Form (SB08)	227254ids.pdf	126077 b4a18b61e7dc8fc60724c71fb80eb15307a61309	no	1
Warnings:					
Information:					
This is not an USPTO supplied IDS fillable form					
3	Fee Worksheet (SB06)	fee-info.pdf	30664 79997cf1c57536efb4e080bc11298c83f30ff776	no	2
Warnings:					
Information:					
			Total Files Size (in bytes):	245898	

This Acknowledgement Receipt evidences receipt on the noted date by the USPTO of the indicated documents, characterized by the applicant, and including page counts, where applicable. It serves as evidence of receipt similar to a Post Card, as described in MPEP 503.

New Applications Under 35 U.S.C. 111
If a new application is being filed and the application includes the necessary components for a filing date (see 37 CFR 1.53(b)-(d) and MPEP 506), a Filing Receipt (37 CFR 1.54) will be issued in due course and the date shown on this Acknowledgement Receipt will establish the filing date of the application.
National Stage of an International Application under 35 U.S.C. 371
If a timely submission to enter the national stage of an international application is compliant with the conditions of 35 U.S.C. 371 and other applicable requirements a Form PCT/DO/EO/903 indicating acceptance of the application as a national stage submission under 35 U.S.C. 371 will be issued in addition to the Filing Receipt, in due course.
New International Application Filed with the USPTO as a Receiving Office
If a new international application is being filed and the international application includes the necessary components for an international filing date (see PCT Article 11 and MPEP 1810), a Notification of the International Application Number and of the International Filing Date (Form PCT/RO/105) will be issued in due course, subject to prescriptions concerning national security, and the date shown on this Acknowledgement Receipt will establish the international filing date of the application.

UNITED STATES PATENT AND TRADEMARK OFFICE

UNITED STATES DEPARTMENT OF COMMERCE
United States Patent and Trademark Office
Address: COMMISSIONER FOR PATENTS
P.O. Box 1450
Alexandria, Virginia 22313-1450
www.uspto.gov

APPLICATION NUMBER	FILING OR 371(C) DATE	FIRST NAMED APPLICANT	ATTY. DOCKET NO./TITLE
16/014,394	06/21/2018	John Edward Bowen	13682.227254

CONFIRMATION NO. 1994

PUBLICATION NOTICE

OC000000103355759

91764
King & Spalding LLP (Eaton/Cooper)
ATTN: IP Docketing Department
1100 Louisiana Street, Suite 4000
Houston, TX 77002-5213

Title:CONFIGURABLE LIGHTING SYSTEM

Publication No.US-2018-0310381-A1
Publication Date:10/25/2018

NOTICE OF PUBLICATION OF APPLICATION

The above-identified application will be electronically published as a patent application publication pursuant to 37 CFR 1.211, et seq. The patent application publication number and publication date are set forth above.

The publication may be accessed through the USPTO's publically available Searchable Databases via the Internet at www.uspto.gov. The direct link to access the publication is currently http://www.uspto.gov/patft/.

The publication process established by the Office does not provide for mailing a copy of the publication to applicant. A copy of the publication may be obtained from the Office upon payment of the appropriate fee set forth in 37 CFR 1.19(a)(1). Orders for copies of patent application publications are handled by the USPTO's Public Records Division. The Public Records Division can be reached by telephone at (571) 272-3150 or (800) 972-6382, by facsimile at (571) 273-3250, by mail addressed to the United States Patent and Trademark Office, Public Records Division, Alexandria, VA 22313-1450 or via the Internet.

In addition, information on the status of the application, including the mailing date of Office actions and the dates of receipt of correspondence filed in the Office, may also be accessed via the Internet through the Patent Electronic Business Center at www.uspto.gov using the public side of the Patent Application Information and Retrieval (PAIR) system. The direct link to access this status information is currently https://portal.uspto.gov/pair/PublicPair. Prior to publication, such status information is confidential and may only be obtained by applicant using the private side of PAIR.

Further assistance in electronically accessing the publication, or about PAIR, is available by calling the Patent Electronic Business Center at 1-866-217-9197.

Office of Data Managment, Application Assistance Unit (571) 272-4000, or (571) 272-4200, or 1-888-786-0101

UNITED STATES PATENT AND TRADEMARK OFFICE

UNITED STATES DEPARTMENT OF COMMERCE
United States Patent and Trademark Office
Address: COMMISSIONER FOR PATENTS
P.O. Box 1450
Alexandria, Virginia 22313-1450
www.uspto.gov

APPLICATION NO.	FILING DATE	FIRST NAMED INVENTOR	ATTORNEY DOCKET NO.	CONFIRMATION NO.
16/014,394	06/21/2018	John Edward Bowen	13682.227254	1994

91764 7590 11/02/2018
King & Spalding LLP (Eaton/Cooper)
ATTN: IP Docketing Department
1100 Louisiana Street, Suite 4000
Houston, TX 77002-5213

EXAMINER
VU, JIMMY T

ART UNIT	PAPER NUMBER
2844	

NOTIFICATION DATE	DELIVERY MODE
11/02/2018	ELECTRONIC

Please find below and/or attached an Office communication concerning this application or proceeding.

The time period for reply, if any, is set in the attached communication.

Notice of the Office communication was sent electronically on above-indicated "Notification Date" to the following e-mail address(es):

houpatentdocket@kslaw.com
nduby@kslaw.com

PTOL-90A (Rev. 04/07)

UNITED STATES PATENT AND TRADEMARK OFFICE

Commissioner for Patents
United States Patent and Trademark Office
P.O. Box 1450
Alexandria, VA 22313-1450
www.uspto.gov

Application No. : 16014394
Applicant : Bowen
Filing Date : 06/21/2018
Date Mailed : 11/02/2018

NOTICE TO FILE CORRECTED APPLICATION PAPERS

Notice of Allowance Mailed

This application has been accorded an Allowance Date and is being prepared for issuance. The application, however, is incomplete for the reasons below.

Applicant is given two (2) months from the mail date of this Notice within which to respond. This time period for reply is extendable under 37 CFR 1.136(a) for only TWO additional MONTHS.

The informalities requiring correction are indicated in the attachment(s). If the informality pertains to the abstract, specification (including claims) or drawings, the informality must be corrected with an amendment in compliance with 37 CFR 1.121 (or, if the application is a reissue application, 37 CFR 1.173). Such an amendment may be filed after payment of the issue fee if limited to correction of informalities noted herein. See Waiver of 37 CFR 1.312 for Documents Required by the Office of Patent Publication, 1280 Off. Gaz. Patent Office 918 (March 23, 2004). In addition, if the informality is not corrected until after payment of the issue fee, for purposes of 35 U.S.C. 154(b)(1)(iv), "all outstanding requirements" will be considered to have been satisfied when the informality has been corrected. A failure to respond within the above-identified time period will result in the application being ABANDONED.

See attachment(s).

A copy of this notice MUST be returned with the reply. Please address response to "Mail Stop Issue Fee, Commissioner for Patents, P.O. Box 1450, Alexandria, VA 22313-1450".

/Chris Harmon/
Publication Branch
Office of Data Management
(571) 272-4200

Application No. 16014394 **Drawings filed: 06/21/2018**

IDENTIFICATION OF DRAWING DEFICIENCIES

- [ ] There is a hole or the image thereof within the illustration. FIG(s)
- [ ] The illustration is penetrated or traversed by a solid or broken line that is not intended to be part of the drawing, such as a dark line caused by a flaw in the copying process. FIG(s)
- [ ] An ink stamp or the image thereof obscures part of the illustration. FIG(s)
- [ ] The drawing is marred by black smudges, obliterations, or fax/copier marks (for example, speckles or dots in a substantial portion of the drawing). FIG(s)
- [ ] Figure numbers are duplicated or missing. FIG(s)
- [ ] Drawing sheet or figure is missing. FIG(s)
- [ ] Numbers, letters, or reference characters in the drawing have been crossed out or are illegibly handwritten. FIG(s)
- [ ] The character of the lines, numbers, and letters is poor. FIG(s)
- [X] The drawing's background shows that the original drawing was made on graph paper or other paper with a pattern or decoration. FIG(s) 8-10
- [ ] The FIG. number label is placed in a location that causes the drawing to be read upside down. FIG(s)
- [ ] Data, a reference number, or part of the drawing is truncated or missing, or a lead line has no reference number. FIG(s)
- [ ] The drawing and/or the FIG. label contain(s) foreign language. FIG(s)
- [X] This utility application contains a photograph of a view that is capable of being illustrated as a line drawing. FIG(s) 6C
- [ ] A petition under 37 CFR 1.84(a)(2) to accept color drawings has been granted, but the brief description of the drawings in the specification does not contain (or has not been amended to contain) the paragraph required by 37 CFR 1.84(a)(2)(iii).
- [ ] This reissue application contains added and/or amended drawings that are not labeled as “New” or “Amended” or “Canceled” as required by 37 CFR 1.173(b)(3). FIG(s)
- [ ] This Design reissue application contains a drawing that is labeled as “Canceled” but is not surrounded by brackets, or a drawing that is surrounded by brackets but is not labeled as “Canceled.” See 37 CFR 1.173(b)(3). FIG(s)
- [ ] OTHER:
- [ ] COMMENTS:

UNITED STATES PATENT AND TRADEMARK OFFICE

UNITED STATES DEPARTMENT OF COMMERCE
United States Patent and Trademark Office
Address: COMMISSIONER FOR PATENTS
P.O. Box 1450
Alexandria, Virginia 22313-1450
www.uspto.gov

APPLICATION NO.	FILING DATE	FIRST NAMED INVENTOR	ATTORNEY DOCKET NO.	CONFIRMATION NO.
16/014,394	06/21/2018	John Edward Bowen	13682.227254	1994

91764 7590 11/23/2018
King & Spalding LLP (Eaton/Cooper)
ATTN: IP Docketing Department
1100 Louisiana Street, Suite 4000
Houston, TX 77002-5213

EXAMINER
VU, JIMMY T

ART UNIT	PAPER NUMBER
2844	

NOTIFICATION DATE	DELIVERY MODE
11/23/2018	ELECTRONIC

Please find below and/or attached an Office communication concerning this application or proceeding.

The time period for reply, if any, is set in the attached communication.

Notice of the Office communication was sent electronically on above-indicated "Notification Date" to the following e-mail address(es):

houpatentdocket@kslaw.com
nduby@kslaw.com

PTOL-90A (Rev. 04/07)

UNITED STATES DEPARTMENT OF COMMERCE
U.S. Patent and Trademark Office
Address: COMMISSIONER FOR PATENTS
P.O. Box 1450
Alexandria, Virginia 22313-1450

APPLICATION NO./ CONTROL NO.	FILING DATE	FIRST NAMED INVENTOR/ PATENT IN REEXAMINATION	ATTORNEY DOCKET NO.
16/014,394	06/21/2018	Bowen et al.	13682.227254

		EXAMINER	
King & Spalding LLP (Eaton/Cooper) ATTN: IP Docketing Department 1100 Louisiana Street, Suite 4000 Houston, TX 77002-5213		JIMMY T VU	
		ART UNIT	PAPER
		2844	20181117

DATE MAILED: _____

Please find below and/or attached an Office communication concerning this application or proceeding.

Commissioner for Patents

The references cited in the Information Disclosure Statement (IDS) filed on 10/22/2018 have been considered by the Examiner. /JV/

/JIMMY T VU/
Primary Examiner, Art Unit 2844

PTO-90C (Rev.04-03)

PTO/SB/08A (08-03)
Approved for use through 07/31/2006. OMB 0651-0031
U.S. Patent and Trademark Office: U.S. DEPARTMENT OF COMMERCE
Under the Paperwork Reduction Act of 1995, no persons are required to respond to a collection of information unless it contains a valid OMB control number.

Substitute for form 1449A/PTO

INFORMATION DISCLOSURE STATEMENT BY APPLICANT

(use as many sheets as necessary)

Sheet	1	of	1

Complete if Known	
Application Number	**16/014395**
Filing Date	**June 21, 2018**
First Named Inventor	**Steven Walter Pyshos**
Group Art Unit	**2844**
Examiner Name	**VU, JIMMY T**
Attorney Docket Number	**13682.227254**

U.S. PATENT DOCUMENTS

Examiner Initials *	Cite No. [1]	U.S. Patent Document Number	Kind Code [2] (if known)	Name of Patentee or Applicant of Cited Document	Date of Publication of Cited Document MM-DD- YYYY	Pages, Columns, Lines, Where Relevant Passages or Relevant Figures Appear
	1	7926300		Roberts	04-19-2011	
	2	8872438		Zhou	10-28-2014	
	3	2013/0328503		Toda	12-12-2013	
	4	8598793		Yan	12-03-2013	

FOREIGN PATENT DOCUMENTS

Examiner Initials *	Cite No. [1]	Foreign Patent Document Office [3]	Number	Kind Code [2] (if known)	Name of Patentee or Applicant of Cited Document	Date of Publication of Cited Document MM-DD- YYYY	Pages, Columns, Lines, Where Relevant Passages or Relevant Figures Appear	T [6]

OTHER PRIOR ART – NON PATENT LITERATURE DOCUMENTS

Examiner Initials *	Cite No. [1]	Include name of the author (in CAPITAL LETTERS), title of the article (when appropriate), title of the item (book, magazine, journal, serial, symposium, catalog, etc.), date, page(s), volume-issue number(s), publisher, city and/or country where published.	T [6]

Examiner Signature	/JIMMY T VU/	Date Considered	11/17/2018

*EXAMINER: Initial if reference considered, whether or not citation is in conformance with MPEP 609. Draw line through citation if not in conformance and not considered. Include copy of this form with next communication to applicant.

[1] Unique citation designation number. [2] See attached Kinds of U.S. Patent Documents. [3] Enter Office that issued the document, by the two-letter code (WIPO Standard ST.3). [4] For Japanese patent documents, the indication of the year of the reign of the Emperor must precede the serial number of the patent document. [5] Kind of document by the appropriate symbols as indicated on the document under WIPO Standard ST. 16 if possible. [6] Applicant is to place a check mark here if English language Translation is attached.

Burden Hour Statement: This form is estimated to take 2.0 hours to complete. Time will vary depending upon the needs of the individual case. Any comments on the amount of time you are required to complete this form should be sent to the Chief Information Officer, U. S. Patent and Trademark Office, Washington, DC 20231. DO NOT SEND FEES OR COMPLETED FORMS TO THIS ADDRESS. SEND TO: Assistant Commissioner for Patents, Washington, DC 20231.

ALL REFERENCES CONSIDERED EXCEPT WHERE LINED THROUGH. /J.T.V/

Electronic Patent Application Fee Transmittal

Application Number:	16014394
Filing Date:	21-Jun-2018
Title of Invention:	CONFIGURABLE LIGHTING SYSTEM
First Named Inventor/Applicant Name:	John Edward Bowen
Filer:	Robert Timothy Neufeld
Attorney Docket Number:	13682.227254

Filed as Large Entity

Filing Fees for Utility under 35 USC 111(a)

Description	Fee Code	Quantity	Amount	Sub-Total in USD($)
Basic Filing:				
Pages:				
Claims:				
Miscellaneous-Filing:				
Petition:				
Patent-Appeals-and-Interference:				
Post-Allowance-and-Post-Issuance:				
Extension-of-Time:				

Description	Fee Code	Quantity	Amount	Sub-Total in USD($)
Miscellaneous:				
SUBMISSION- INFORMATION DISCLOSURE STMT	1806	1	240	240
		Total in USD ($)		**240**

Electronic Acknowledgement Receipt

EFS ID:	34480767
Application Number:	16014394
International Application Number:	
Confirmation Number:	1994
Title of Invention:	CONFIGURABLE LIGHTING SYSTEM
First Named Inventor/Applicant Name:	John Edward Bowen
Customer Number:	91764
Filer:	Robert Timothy Neufeld
Filer Authorized By:	
Attorney Docket Number:	13682.227254
Receipt Date:	04-DEC-2018
Filing Date:	21-JUN-2018
Time Stamp:	20:54:42
Application Type:	Utility under 35 USC 111(a)

Payment information:

Submitted with Payment	yes
Payment Type	CARD
Payment was successfully received in RAM	$240
RAM confirmation Number	120618INTEFSW20550400
Deposit Account	
Authorized User	
The Director of the USPTO is hereby authorized to charge indicated fees and credit any overpayment as follows:	

File Listing:

Document Number	Document Description	File Name	File Size(Bytes)/ Message Digest	Multi Part /.zip	Pages (if appl.)
1	Transmittal Letter	227254tran.pdf	89149 752064d64c05ee051f293af6ef094a8b006d53ce	no	3
Warnings:					
Information:					
2	Information Disclosure Statement (IDS) Form (SB08)	227254ids.pdf	125291 fdd0bdb30e3259cd105cfc426dcf962e79eccecc	no	1
Warnings:					
Information:					
This is not an USPTO supplied IDS fillable form					
3	Fee Worksheet (SB06)	fee-info.pdf	30664 5278fc688f80069f698636df7c68769b4403863b	no	2
Warnings:					
Information:					
		Total Files Size (in bytes):	245104		

This Acknowledgement Receipt evidences receipt on the noted date by the USPTO of the indicated documents, characterized by the applicant, and including page counts, where applicable. It serves as evidence of receipt similar to a Post Card, as described in MPEP 503.

New Applications Under 35 U.S.C. 111
If a new application is being filed and the application includes the necessary components for a filing date (see 37 CFR 1.53(b)-(d) and MPEP 506), a Filing Receipt (37 CFR 1.54) will be issued in due course and the date shown on this Acknowledgement Receipt will establish the filing date of the application.
National Stage of an International Application under 35 U.S.C. 371
If a timely submission to enter the national stage of an international application is compliant with the conditions of 35 U.S.C. 371 and other applicable requirements a Form PCT/DO/EO/903 indicating acceptance of the application as a national stage submission under 35 U.S.C. 371 will be issued in addition to the Filing Receipt, in due course.
New International Application Filed with the USPTO as a Receiving Office
If a new international application is being filed and the international application includes the necessary components for an international filing date (see PCT Article 11 and MPEP 1810), a Notification of the International Application Number and of the International Filing Date (Form PCT/RO/105) will be issued in due course, subject to prescriptions concerning national security, and the date shown on this Acknowledgement Receipt will establish the international filing date of the application.

IN THE UNITED STATES PATENT AND TRADEMARK OFFICE

In re Application of:	§	
Steven Walter Pyshos	§	Confirmation No.: **1994**
	§	
Application Serial No: **16/014,394**	§	Group Art Unit: **2844**
	§	
Filed: **06-21-2018**	§	Examiner: **VU, JIMMY T**
	§	
For: **Configurable Lighting System**	§	Attorney Docket: **13682.227254**

INFORMATION DISCLOSURE STATEMENT

Commissioner for Patents
P.O. Box 1450
Alexandria, VA 22313-1450

Sir:

This Information Disclosure Statement is filed in accordance with 37 C.F.R. §§1.56, 1.97 and 1.98. The items listed on Form SB/08B are made of record to assist the Patent and Trademark Office in its examination of this application. The Examiner is respectfully requested to fully consider the items and to independently ascertain their teaching.

1. ☐ For each of the following items listed on the enclosed copy of Form SB/08B that is not in the English language, an English language translation of that item or a portion thereof or a concise explanation of the relevance of that item is enclosed:

2. ☐ For each of the following items listed on the enclosed copy of Form SB/08B that is not in the English language, a concise explanation of the relevance of that item is provided:

3. ☐ Any copy of the items listed on the enclosed copy of Form SB/08B that is not enclosed with this Information Disclosure Statement was previously cited by or submitted to the Patent and Trademark Office in application Serial No.

4. ☐ No fee is due under 37 C.F.R. §1.17(p) for this Information Disclosure Statement since it is being filed in compliance with:

   ☐ 37 C.F.R. §1.97(b)(1), within three months of the filing date of a national application other than a CPA; or

   ☐ 37 C.F.R. §1.97(b)(2), within three months of the date of entry into the national stage as set forth in §1.491 in an international application; or

☐ 37 C.F.R. §1.97(b)(3), before the mailing date of a first Office action on the merits; or

☐ 37 C.F.R. §1.97(b)(4) before the mailing date of a first office action after the filing of an RCE under §1.114

5. ☐ No fee is due under 37 C.F.R. §1.17(p) for this Supplemental Information Disclosure Statement since it is being filed in compliance with 37 C.F.R. §1.97(c), after the period specified in paragraph 4 above but before the mailing date of a final action or a Notice of Allowance (where there has been no prior final action), and is accompanied by one of the certifications pursuant to 37 C.F.R. §1.97(e) set forth in paragraph 9 below.

6. ☐ A fee is due under 37 C.F.R. §1.17(p) for this Supplemental Information Disclosure Statement since it is being filed in compliance with 37 C.F.R. §1.97(c), after the period specified in paragraph 4 above but before the mailing date of a final action or a notice of allowance (where there has been no prior final action):

☐ Payment of $240.00 is being made with a credit card via EFS-Web.

☐ Charge the fee to Deposit Account No.11-0980, Order No._____.

7. ☒ A fee is due under 37 C.F.R. §1.17(p) for this Supplemental Information Disclosure Statement since it is being filed in compliance with 37 C.F.R. §1.97(d), after the mailing date of a final action or a notice of allowance, whichever comes first, but before payment of the issue fee, and is accompanied by:

a. one of the certifications pursuant to 37 C.F.R. §1.97(e) set forth in paragraph 9 below; and

b. the fee due under 37 C.F.R. §1.17(p) which is paid as set forth in paragraph 11 below.

8. ☐ This Supplemental Information Disclosure Statement is being filed in compliance with:

a. ☐ 37 C.F.R. §1.313(b)(3) or §1.313(c)(1), after the issue fee has been paid and information cited in this Supplemental Information Disclosure Statement may render at least one claim unpatentable and is accompanied by the attached Petition To Withdraw Application From Issue and fee pursuant to 37 C.F.R. §1.17(h);

b. ☐ 37 C.F.R. §1.313(c)(2) or §1.313(c)(3), after the issue fee has been paid and information cited in this Supplemental Information Disclosure Statement is to be considered in a Request for Continued Examination (RCE) or a Continuation application upon abandonment of the instant application and is accompanied by the attached Petition To Withdraw Application From Issue and fee pursuant to 37 C.F.R. §1.17(h).

c. ☐ The fee due under 37 C.F.R. §§1.17(h) is paid as set forth in paragraph 11 below.

9. ☐ I hereby certify that each item of information contained in this Supplemental Information Disclosure Statement was first cited in a communication from a foreign patent office in a counterpart foreign application not more than three months prior to the filing of this Supplemental Information Disclosure Statement.

☒ I hereby certify that no item of information in the Supplemental Information Disclosure Statement filed herewith was cited in a communication from a foreign patent office in a counterpart foreign application or, to my knowledge after making reasonable inquiry, was known to any individual designated in §1.56(c) more than three months prior to the filing of this Supplemental Information Disclosure Statement.

10. ☐ This document is accompanied by ☐ a Search Report ☐ Communication which was cited in a corresponding ☐ PCT or ☐ Foreign counterpart application.

11. ☒ Charge any fees due under 37 C.F.R. §§1.17(h) and 1.17(p) to Deposit Account No.-110980.

☒ The Commissioner is hereby authorized to charge any additional fees which may be required for this Information Disclosure Statement, or credit any overpayment to Deposit Account No. 11-0980.

Respectfully submitted,
KING & SPALDING LLP

/Robert T. Neufeld/
Robert T. Neufeld
Reg. No. 48394

Correspondence Address:
King & Spalding LLP
1180 Peachtree Street
Atlanta, GA 30309
404-572-4600 Telephone
404-572-5100 Facsimile

PTO/SB/08A (08-03)
Approved for use through 07/31/2006. OMB 0651-0031
U.S. Patent and Trademark Office: U.S. DEPARTMENT OF COMMERCE
Under the Paperwork Reduction Act of 1995 no persons are required to respond to a collection of information unless it contains a valid OMB control number.

Substitute for form 1449A/PTO

INFORMATION DISCLOSURE STATEMENT BY APPLICANT

(use as many sheets as necessary)

Sheet	1	of	1

Complete if Known	
Application Number	**16/014,394**
Filing Date	**06-21-2018**
First Named Inventor	**John Edward Bowen**
Group Art Unit	**2844**
Examiner Name	**Jimmy T. Vu**
Attorney Docket Number	**13682.227254**

U.S. PATENT DOCUMENTS

Examiner Initials *	Cite No. [1]	U.S. Patent Document Number	Kind Code (if known)	Name of Patentee or Applicant of Cited Document	Date of Publication of Cited Document MM-DD- YYYY	Pages Columns Lines Where Relevant Passages or Relevant Figures Appear
	1.	10,091,855		Van Winkle	10-02-2018	

FOREIGN PATENT DOCUMENTS

Examiner Initials *	Cite No. [1]	Foreign Patent Document Office[3]	Number	Kind Code[2] (if known)	Name of Patentee or Applicant of Cited Document	Date of Publication of Cited Document MM-DD- YYYY	Pages Columns Lines Where Relevant Passages or Relevant Figures Appear	T [6]

OTHER PRIOR ART – NON PATENT LITERATURE DOCUMENTS

Examiner Initials *	Cite No. [1]	Include name of the author (in CAPITAL LETTERS) title of the article (when appropriate) title of the item (book magazine journal serial symposium catalog etc.) date page(s) volume-issue number(s) publisher city and/or country where published.	T [6]

Examiner Signature		Date Considered	

*EXAMINER: Initial if reference considered whether or not citation is in conformance with MPEP 609. Draw line through citation if not in conformance and not considered. Include copy of this form with next communication to applicant.

[1] Unique citation designation number. [2] See attached Kinds of U.S. Patent Documents. [3] Enter Office that issued the document by the two-letter code (WIPO Standard ST.3). [4] For Japanese patent documents the indication of the year of the reign of the Emperor must precede the serial number of the patent document. [5] Kind of document by the appropriate symbols as indicated on the document under WIPO Standard ST. 16 if possible. [6] Applicant is to place a check mark here if English language Translation is attached.

Burden Hour Statement: This form is estimated to take 2.0 hours to complete. Time will vary depending upon the needs of the individual case. Any comments on the amount of time you are required to complete this form should be sent to the Chief Information Officer U. S. Patent and Trademark Office Washington DC 20231. DO NOT SEND FEES OR COMPLETED FORMS TO THIS ADDRESS. SEND TO: Assistant Commissioner for Patents Washington DC 20231.
DMSLIBRARY01\33475054.v1

AMENDMENTS TO THE DRAWINGS

Please replace Figures 6C and 8-10, submitted on June 21, 2018, with the enclosed replacement sheets. Revised Figure 6C is recreated as a line drawing, and revised Figures 8-10 are recreated to remove any perceived graph lines, pattern, decorations, or other similar extraneous elements from the background of those drawings. No new matter is added to these revised drawings.

REMARKS

Applicants thank Examiner Vu for the pending Notice of Allowance, mailed on October 16, 2018. Consideration of the present application is respectfully requested in light of the above amendments to the specification and drawings, and in view of at least the following remarks.

I. AMENDMENTS TO THE SPECIFICATION

As stated above, paragraphs [0071] through [0073] of the specification are hereby amended because, as a result of revising some of the originally-filed drawings, some non-substantive changes were made to those paragraphs of the Specification. No new matter is added by ways of these amendments to paragraphs [0071] through [0073]. Clean and marked-up versions of a substitute specification showing these changes to paragraphs [0071] through [0073] are provided herewith. Entry of these amendments to the specification is hereby respectfully requested.

II. AMENDMENTS TO THE DRAWINGS

As discussed above, Figures 6C and 8-10, submitted on June 21, 2018, are hereby replaced with the enclosed replacement sheets. Revised Figure 6C is recreated as a line drawing, and revised Figures 8-10 are recreated to remove any perceived any graph lines, pattern, decorations, or other similar extraneous elements from the background of those drawings. No new matter is added to these revised drawings. Applicants assert that Figures 6C and 8-10 now comply with the requirements of 37 C.F.R. 1.84 and 37 C.F.R. 1.121(d). Applicants respectfully request that the Examiner indicate that the replacement drawings are accepted in the next communication by the Examiner to Applicants.

CONCLUSION

The foregoing Response is submitted as a full and complete response to the Notice. Should the Examiner have any questions or comments, please contact the undersigned at the telephone number below.

Applicants submit that no additional fees are required with this Response. Nonetheless, to the extent the Office determines that additional fees are required, authorization is hereby given to charge the required fees to deposit account 11-0980.

Respectfully Submitted,

/Timothy M. Smith/

Date: December 31, 2018

Timothy M. Smith
Registration No. 62,052
King & Spalding LLP
1100 Louisiana Street, Suite 4000
Houston, TX 77002-5213
Telephone: 713.276.7330
E-mail: houpatentdocket@kslaw.com

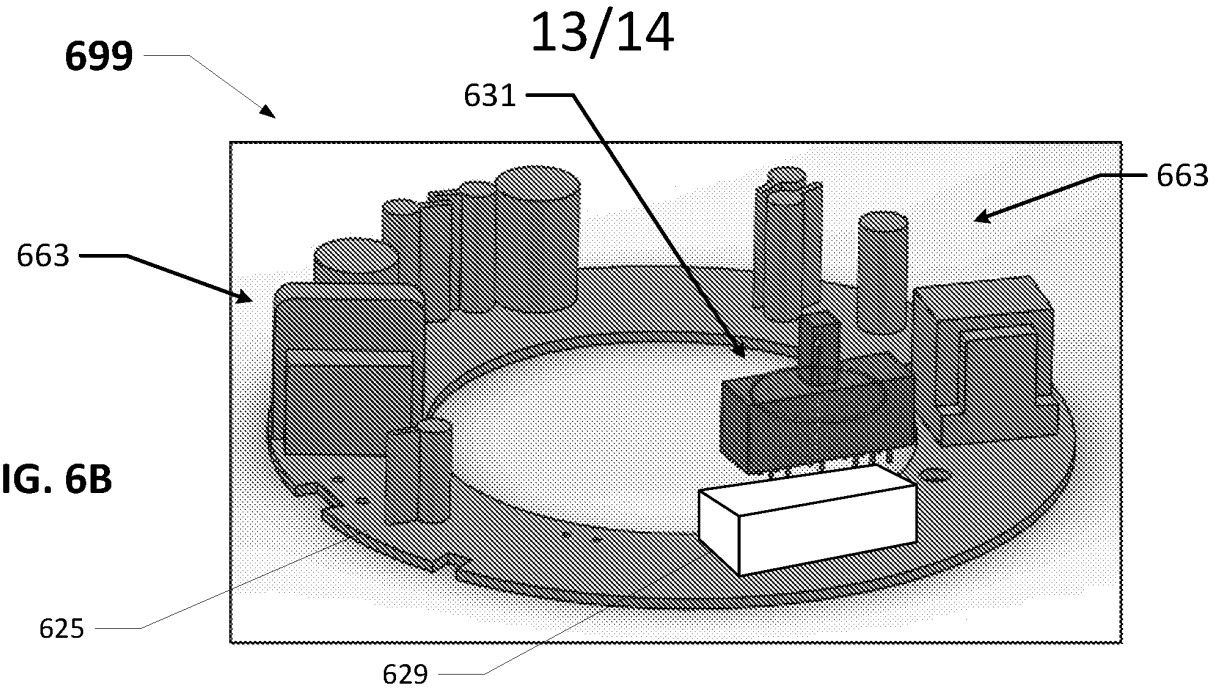
699
631
663
663
625
629

FIG. 6B

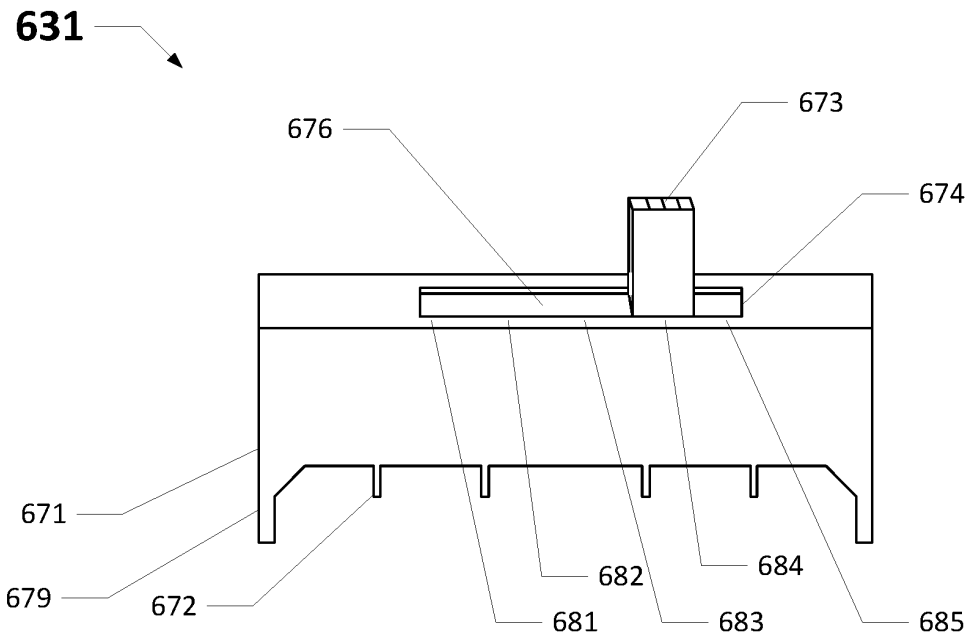
631
676
673
674
671
679
672
682
684
681
683
685

FIG. 6C

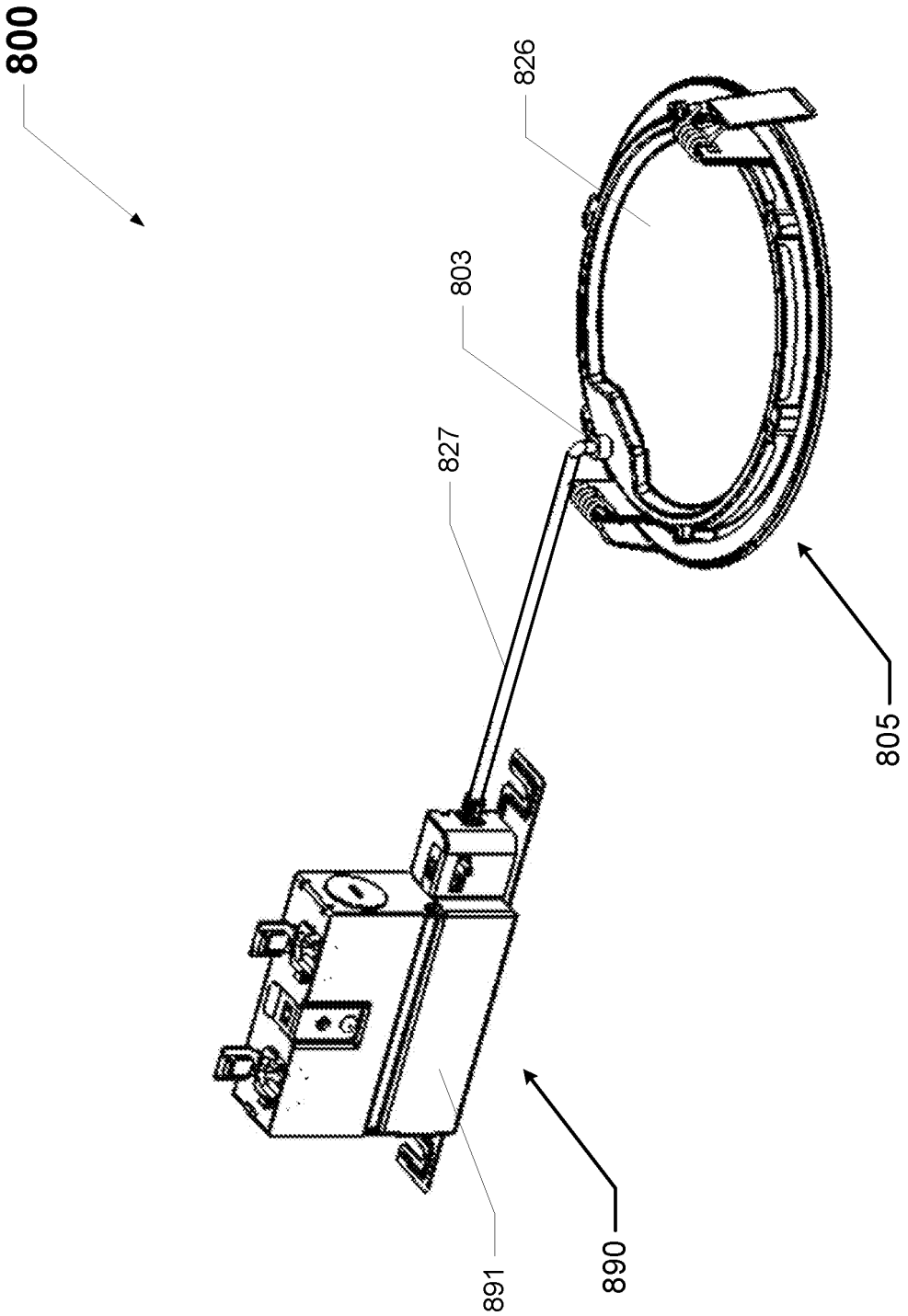

FIG. 8
(PRIOR ART)

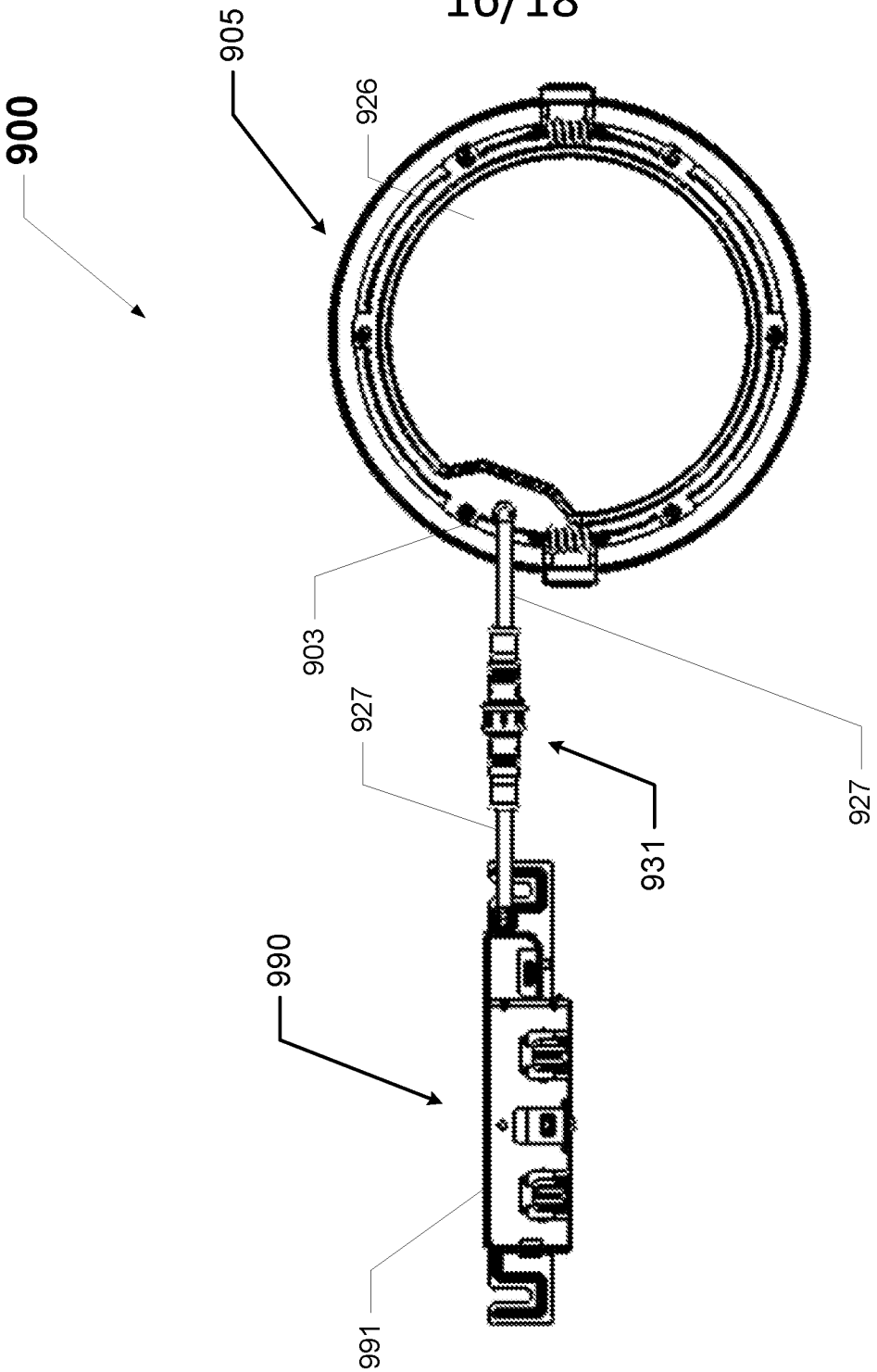

FIG. 9A

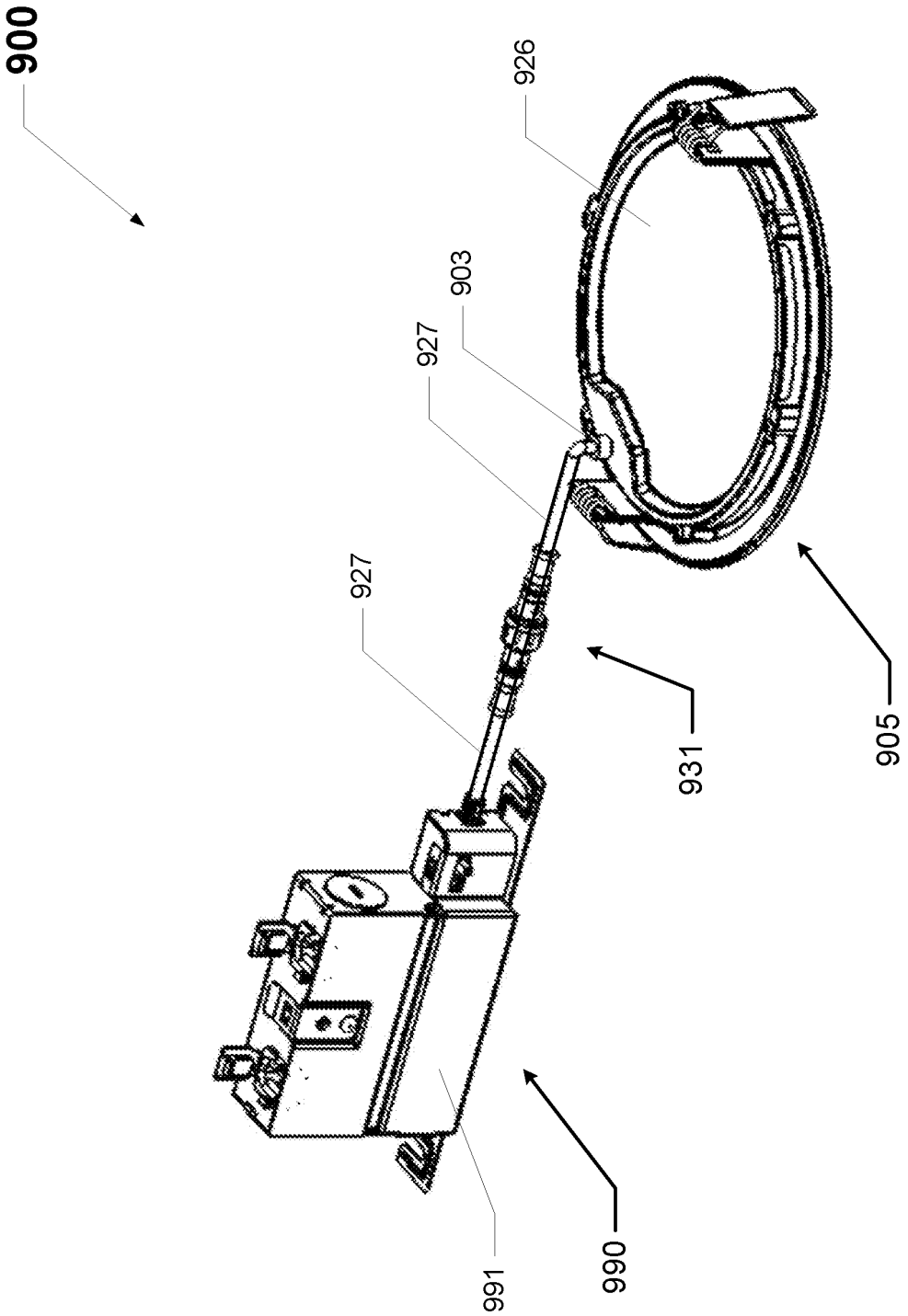

FIG. 9B

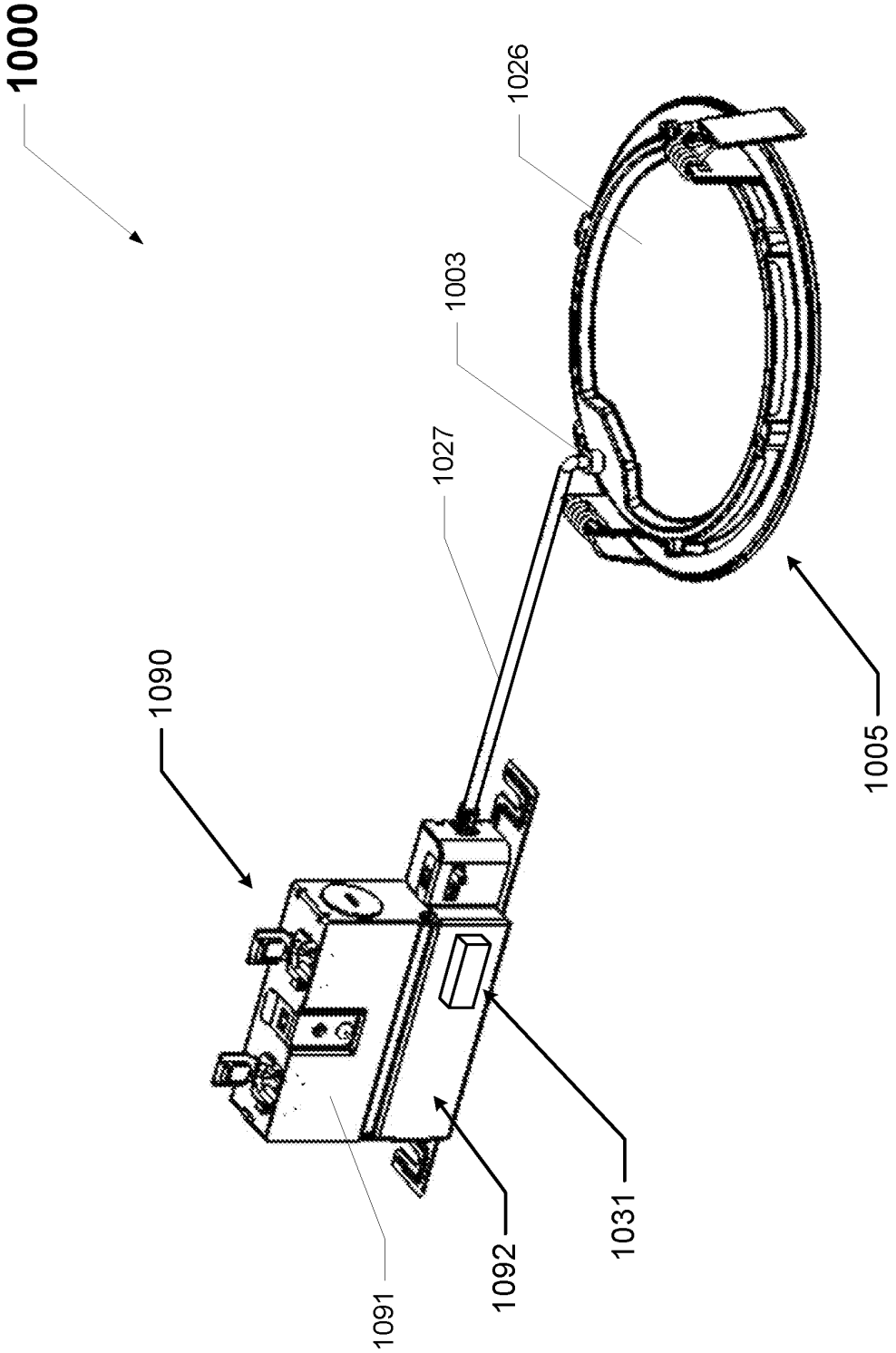

FIG. 10

SUBSTITUTE SPECIFICATION
U.S. PATENT APPLICATION NO. 16/014,394
VERSION WITH MARKINGS

CONFIGURABLE LIGHTING SYSTEM

CROSS REFERENCE TO RELATED APPLICATIONS

[0001] This application is a continuation-in-part of and claims priority to U.S. Patent Application Serial Number 15/811,062, titled "Configurable Lighting System" and filed on November 13, 2017, which is a continuation application of and claims priority to U.S. Patent Application No. 15/435,141, filed February 16, 2017, and titled "Configurable Lighting System," which claims priority to U.S. Provisional Patent Application Number 62/297,424 filed February 19, 2016, and titled "Configurable Lighting System". The entire contents of these aforementioned applications are hereby incorporated herein by reference.

TECHNICAL FIELD

[0002] Embodiments of the technology relate generally to lighting systems and more specifically to lighting systems that can be readily configured to produce illumination of different color temperatures.

BACKGROUND

[0003] For illumination applications, light emitting diodes (LEDs) offer substantial potential benefit associated with their energy efficiency, light quality, and compact size. However, to realize the full potential benefits offered by light emitting diodes, new technologies are needed.

[0004] With luminaires that incorporate incandescent or fluorescent technology, some flexibility can be obtained by swapping lamps to meet user preferences. In such luminaires, lamp selection can provide flexibility in terms of correlated color temperature (CCT or color temperature) and light output (lumen output). For example, a compact fluorescent downlight might accept 6-, 32-, and 42-watt lamps in 2700, 3000, and 3500 K CCT. Additionally, changing lamp position and focal point in a reflector of an

Luminex v. Signify
Luminex Exhibit 1007
Page 138

incandescent or fluorescent fixture can change the fixture spacing criteria (SC) of a luminaire.

[0005] In contrast, conventional light-emitting-diode-based luminaires typically offer reduced flexibility when the luminaire's light-emitting-diode-based light source is permanently attached to the luminaire. Stocking conventional light-emitting-diode-based luminaires at distribution to accommodate multiple configurations that users may desire can entail maintaining a relatively large or cumbersome inventory.

[0006] Need is apparent for a technology to provide a light emitting diode system that can adapt to various applications, for example by delivering multiple color temperatures, multiple lumens, and/or multiple photometric distributions. Need further exists for a capability to enable a single luminaire to be stocked at distribution and then quickly configured according to application parameters and deployment dictates. Need further exists for luminaires that are both energy efficient and flexible. A capability addressing one or more such needs, or some other related deficiency in the art, would support improved illumination systems and more widespread utilization of light emitting diodes in lighting applications.

SUMMARY

[0007] In some aspects of the disclosure, a system can configure a luminaire for providing illumination of a selected color temperature, a selected lumen output, or a selected photometric distribution based on an input. The input may be field selectable or may be selectable at a distribution center or at a late stage of luminaire manufacture, for example.

[0008] In some aspects of the disclosure, the luminaire can comprise at least two light sources having different color temperatures. In a first configuration, the luminaire can produce illumination of a first color temperature using a first one of the light sources. In a second configuration, the luminaire can produce illumination of a second color temperature using a second one of the light sources. In a third configuration, the luminaire can produce illumination of a third color temperature using both of the first and

Luminex v. Signify
Luminex Exhibit 1007
Page 139

second the light sources. The third color temperature may be between the first and second color temperatures. The value of the third color temperature within a range between the first and second color temperatures can be controlled by manipulating the relative amounts of light output by the first and second light sources. That is, adjusting the lumen outputs of the first and second light sources can define the color temperature of the illumination produced by the luminaire in the third configuration.

[0009] In some aspects of the disclosure, the luminaire can comprise at least two light sources having different lumen outputs. In a first configuration, the luminaire can produce illumination of a first lumen output using a first one of the light sources. In a second configuration, the luminaire can produce illumination of a second lumen output using a second one of the light sources. In a third configuration, the luminaire can produce illumination of a third lumen output using both of the first and second light sources.

[0010] In some aspects of the disclosure, the luminaire can comprise at least two light sources having different photometric distributions. In a first configuration, the luminaire can produce illumination of a first photometric distribution using a first one of the light sources. In a second configuration, the luminaire can produce illumination of a second photometric distribution using a second one of the light sources. In a third configuration, the luminaire can produce illumination of a third photometric distribution using both of the first and second light sources.

[0011] In some aspects of the disclosure, a circuit and an associated input to the circuit can configure a luminaire for providing illumination having a selected property, for example a selected color temperature, a selected lumen output, or a selected photometric distribution. The input can be settable to a first number of states. The circuit can map the first number of states into a second number of states that is less than the first number of states. For example, the input can have four states and the circuit can map these four states into three states. The three states can correspond to three different values of the illumination property, for example three different color temperatures, three different lumen outputs, or three different photometric distributions.

Luminex v. Signify
Luminex Exhibit 1007
Page 140

[0012] The foregoing discussion of controlling illumination is for illustrative purposes only. Various aspects of the present disclosure may be more clearly understood and appreciated from a review of the following text and by reference to the associated drawings and the claims that follow. Other aspects, systems, methods, features, advantages, and objects of the present disclosure will become apparent to one with skill in the art upon examination of the following drawings and text. It is intended that all such aspects, systems, methods, features, advantages, and objects are to be included within this description and covered by this application and by the appended claims of the application.

BRIEF DESCRIPTION OF THE DRAWINGS

[0013] Figures 1A, 1B, 1C, 1D, 1E, 1F, 1G, 1H, 1I, 1J, and 1K (collectively Figure 1) illustrate views of a luminaire in accordance with some example embodiments of the disclosure.

[0014] Figure 2 illustrates a functional block diagram of a circuit that a luminaire can comprise in accordance with some example embodiments of the disclosure.

[0015] Figure 3 illustrates a state table for a circuit that a luminaire can comprise in accordance with some example embodiments of the disclosure.

[0016] Figure 4 illustrates a schematic of a circuit that a luminaire can comprise in accordance with some example embodiments of the disclosure.

[0017] Figure 5 shows a luminaire currently known in the art.

[0018] Figures 6A-6C show a luminaire that includes a switch in accordance with certain example embodiments.

[0019] Figure 7 shows a luminaire that is configured to receive a switch in accordance with certain example embodiments.

[0020] Figure 8 shows another luminaire currently known in the art.

[0021] Figures 9A and 9B show another luminaire that includes a switch in accordance with certain example embodiments.

Luminex v. Signify
Luminex Exhibit 1007
Page 141

[0022] Figure 10 shows yet another luminaire that includes a switch in accordance with certain example embodiments.

[0023] Many aspects of the disclosure can be better understood with reference to the above drawings. The drawings illustrate only example embodiments and are therefore not to be considered limiting of the embodiments described, as other equally effective embodiments are within the scope and spirit of this disclosure. The elements and features shown in the drawings are not necessarily drawn to scale, emphasis instead being placed upon clearly illustrating principles of the embodiments. Additionally, certain dimensions or positionings may be exaggerated to help visually convey certain principles. In the drawings, similar reference numerals among different figures designate like or corresponding, but not necessarily identical, elements.

DETAILED DESCRIPTION OF EXAMPLE EMBODIMENTS

[0024] In some example embodiments of the disclosure, a luminaire can comprise multiple groups of light emitting diodes of different color temperatures and a constant current power supply for powering the light emitting diodes. The power supply can utilize a switching scheme that can turn each group of light emitting diodes on and off to change the color temperature of the luminaire. In some example embodiments, the power supply can further vary the relative intensities of the light emitting diodes to manipulate the color temperature of the luminaire within a range.

[0025] For example, the luminaire can comprise a 3,000 K group of light emitting diodes and a 4,000 K group of light emitting diodes. When only the 3,000 K group is on, the luminaire can deliver 3,000 K illumination. When only the 4,000 K group is on, the luminaire can deliver 4,000 K illumination. When the 3,000 K group and the 4,000 K group are both on, the luminaire can deliver 3,500 K illumination. If the 4,000 K group of light emitting diodes is concurrently operated at a low lumen output and the 3,000 K group is operated at a high lumen output, the luminaire may deliver illumination of another selected color temperature, for example 3,100 K.

Luminex v. Signify
Luminex Exhibit 1007
Page 142

[0026] In some example embodiments, a controller can adjust lumen output automatically to maintain constant delivered lumens across multiple color temperatures or to suite application requirements. The controller implements the adjustment utilizing programmable driver current and/or via turning on and off various groups of light emitting diodes. Configurable color temperature or lumen output can function in combination with integral dimming, for example to facilitate interface with building automation, sensors, and dimmers.

[0027] In some example embodiments, luminaires can achieve an additional level of flexible configuration at a distribution center using interchangeable optics. For example, primary optics can provide medium distribution (e.g. spacing criteria equals 1.0), while a diffuser or concentrator lens can be used to achieve wide distribution (e.g. spacing criteria equals 1.4), and narrow distribution (e.g. spacing criteria equals 0.4).

[0028] In some example embodiments, a luminaire's configuration of delivered lumens and color temperatures can be set at the factory, at distribution, or in the field. To meet current and emerging code compliance, performance markings on a luminaire can indicate and correspond to the desired setting. Economical, field-installed nameplates can identify the various electrical and optical performance ratings and, when installed, permanently program the delivered lumens and color temperature. Other settings, such as dimming protocols, can likewise be configured. The interface between the nameplate and internal logic can use mechanical, electrical or optical means, for example.

[0029] Accordingly, in some embodiments of the disclosure, the technology provides product markings and supports regulatory compliance. For example, nameplates can indicate energy codes and rebate opportunities, for compliance with product labeling and to facilitate compliance confirmation by local authorities who may have jurisdiction. Further, luminaires that include example switches can be subject to meeting certain standards and/or requirements. For example, Underwriters Laboratories (UL), the National Electric Code (NEC), the National Electrical Manufacturers Association (NEMA), the International Electrotechnical Commission (IEC), the Federal Communication Commission (FCC), the Illuminating Engineering Society (IES), and the

Luminex v. Signify
Luminex Exhibit 1007
Page 143

Institute of Electrical and Electronics Engineers (IEEE) set standards as to luminaires. Use of example embodiments described herein meet (and/or allow a corresponding luminaire to meet) such standards when required.

[0030] If a component of a figure is described but not expressly shown or labeled in that figure, the label used for a corresponding component in another figure can be inferred to that component. Conversely, if a component in a figure is labeled but not described, the description for such component can be substantially the same as the description for the corresponding component in another figure. Further, a statement that a particular embodiment (e.g., as shown in a figure herein) does not have a particular feature or component does not mean, unless expressly stated, that such embodiment is not capable of having such feature or component. For example, for purposes of present or future claims herein, a feature or component that is described as not being included in an example embodiment shown in one or more particular drawings is capable of being included in one or more claims that correspond to such one or more particular drawings herein.

[0031] Example embodiments of configurable lighting systems will be described more fully hereinafter with reference to the accompanying drawings, in which example embodiments of configurable lighting systems are shown. Configurable lighting systems may, however, be embodied in many different forms and should not be construed as limited to the example embodiments set forth herein. Rather, these example embodiments are provided so that this disclosure will be thorough and complete, and will fully convey the scope of configurable lighting systems to those of ordinary skill in the art. Like, but not necessarily the same, elements (also sometimes called components) in the various figures are denoted by like reference numerals for consistency.

[0032] Terms such as “first”, “second”, “third”, “fourth”, “fifth”, “top”, bottom”, “side”, and “within” are used merely to distinguish one component (or part of a component or state of a component) from another. Such terms are not meant to denote a preference or a particular orientation, and are not meant to limit embodiments of configurable lighting systems. In the following detailed description of the example embodiments, numerous specific details are set forth in order to provide a more thorough

understanding of the invention. However, it will be apparent to one of ordinary skill in the art that the invention may be practiced without these specific details. In other instances, well-known features have not been described in detail to avoid unnecessarily complicating the description.

[0033] Referring now to Figure 1, multiple views of the luminaire 100 are shown. Figure 1A illustrates a side perspective view of the luminaire 100. Figure 1B illustrates a top perspective view of the luminaire 100. Figure 1C illustrates a view of the light-emitting bottom of the luminaire 100, showing a lens 120 in a light-emitting aperture 115 of the luminaire 100. Figure 1D illustrates a view of the light-emitting bottom of the luminaire 100 with the lens 120 removed from the light-emitting aperture 115 of the luminaire. Figure 1E illustrates a view of the light-emitting bottom of the luminaire 100 with the lens 120 and an associated reflector 130 removed from the light-emitting aperture 115 of the luminaire. Figure 1F illustrates a cutaway perspective view of the luminaire 100. Figure 1G illustrates another cutaway perspective view of the luminaire 100. Figure 1H illustrates another cutaway view of the luminaire 100. Figures 1I, 1J, and 1K provide detailed views of a portion of the luminaire 100 comprising a cover 126 and an associated access aperture 129 for providing internal access to the luminaire 100. In Figure 1I, the cover 126 is fully removed. In Figure 1J, the cover 126 is positioned adjacent the access aperture 129, for example in connection with attachment or removal of the cover 126. In Figure 1K, the cover 126 is attached to the luminaire 100.

[0034] As best seen in the views of Figures 1A and 1B, the illustrated example luminaire 100 is suited for inserting in an aperture in a ceiling to provide overhead lighting. In this example embodiment, the luminaire 100 can be characterized as an overhead light or a recessed ceiling light. Various other indoor and outdoor luminaires that may be mounted in a wide range of orientations can be substituted for the luminaire 100 illustrated in Figure 1.

[0035] The illustrated example luminaire 100 of Figure 1 comprises a housing 105 that is circular with a protruding trim 110 that extends circumferentially about the

Luminex v. Signify
Luminex Exhibit 1007
Page 145

housing 105. When the luminaire 100 is installed in a ceiling aperture, the rim 100 circumscribes and covers the edge of the ceiling aperture for aesthetics, for support, and for blocking of debris from above the ceiling. Hanger clips 102 hold the luminaire 100 in place in installation.

[0036] As best illustrated in Figures 1I, 1J, and 1K, the example luminaire 100 comprises an access aperture 129 and an associated cover 126. The access aperture 129 provides access to the interior of the luminaire housing 105, for example in the field and/or during luminaire installation. An installer can remove the cover 126 and manually set a dual inline pin (DIP) switch 131 to configure the luminaire 100 for long-term operation providing illumination with a selected color temperature, a selected lumen output, and/or a selected photometric distribution. As illustrated, the dual inline pin switch 131 is mounted on a circuit board adjacent the access aperture 129, thereby facilitating convenient and efficient access in the field or at a distribution center, for example.

[0037] An electrical cable 127 extends through a wiring aperture 103 in the cover 126. The electrical cable 127 terminates in a plug 132 that mates with a receptacle 133 that is mounted inside the housing 105 adjacent the access aperture 129 for convenient field access.

[0038] As illustrated, the example cover 126 comprises two notches 123, 124 that each receives a respective screw 128 for holding the cover 126 in place. The notch 123 is disposed on the right side of the cover 126 and is sized to receive one of the screws 128. Meanwhile, the notch 124 is disposed on a left side of the cover 126 and is sized to receive the other screw 128.

[0039] The left notch 124 and the right notch 123 are oriented so that the cover 126 is rotatable about the right screw 128 when the right screw 128 is loosely disposed in the right notch 123. In other words, cover rotation can occur when the right screw 128 is in the right notch 123 with threads engaged but prior to tightening. In this position, the cover 126 can rotate clockwise about the right screw 128. Thus, the right screw 128 provides an axis of rotation for the cover 126. This clockwise rotation facilitates

convenient manipulation of the cover 126 by a person working the cover 126 to cover the access aperture 129, with the screws 128 engaged but not fully tightened. The clockwise rotation of the cover 126 about the right screw 128 provides the person with a capability to slide the left notch 124 of the cover 126 conveniently under the head of the left screw 128. Once the cover 126 is rotated so the left notch 124 is under the head of the left screw 128, the person (for example an installer) can tighten the two screws 128 to secure the cover 126.

[0040] To remove the cover 126, the person loosens the two screws 128 and then rotates the cover 126 counterclockwise about the right screw 128 so that the left notch 124 moves out from under the head of the left screw 128. Once the left notch 124 is free from the left screw 128, the installer can pull the right notch 123 out from under the right screw 128 to fully remove the cover 126.

[0041] As best seen in the views of Figures 1A, 1C, 1F, and 1G, the lens 120 of the luminaire 100 is positioned adjacent the lower, exit side of the light-emitting aperture 115. As illustrated, the lens 120 can mix and blend light emitted by two groups of light emitting diodes 150, 155, with each group having a different color temperature. In some embodiments, the two groups of light emitting diodes 150, 155 may have color temperatures that differ by at least 500 Kelvin, for example. The group of light emitting diodes 150 can be characterized as one light emitting diode light source, while the group of light emitting diodes 155 can be characterized as another light emitting diode light source. Other embodiments of a light emitting diode light source may have a single light emitting diode or more light emitting diodes than the embodiment illustrated in Figure 1. A reflector 130 is disposed in and lines the aperture 115 to guide and manage the emitted light between the light emitting diodes 150, 155 and the lens 120. In some embodiments, an upper lens (not illustrated) replaces the reflector 130.

[0042] The light emitting diodes 150, 155 are mounted on a substrate 125, for example a circuit board, and form part of a circuit 200. In the illustrated embodiment, the light emitting diodes 150, 155 are interspersed. In other embodiments, the light emitting diodes 150, 155 may be separated from one another or spatially segregated according to

Luminex v. Signify
Luminex Exhibit 1007
Page 147

color temperature or other appropriate parameter. As discussed in further detail below, the circuit 200 supplies electricity to the light emitting diodes 150, 155 with a level of flexibility that facilitates multiple configurations suited to different applications and installation parameters.

[0043] Turning to Figures 2, 3, and 4, some example embodiments of the circuit 200 will be discussed in further detail with example reference to the luminaire 100. The circuit 200 can be applied to other indoor and outdoor luminaires.

[0044] Referring now to Figure 2, this figure illustrates an embodiment of the circuit 200 in an example block diagram form. The circuit 200 comprises a DC power supply 205 for supplying electrical energy that the circuit 200 delivers to the light emitting diodes 150, 155. In an example embodiment, the circuit 200 comprises a light emitting diode driver.

[0045] The dual inline pin switch 131 comprises individual switches 210 that provide an input for configuring the luminaire 100 to operate at a selected color temperature. In the illustrated embodiment, the circuit 200 comprises two manual switches 210. Other embodiments may have fewer or more switches 210. In various embodiments, the switches 210 can be mounted to the housing 105 of the luminaire 100, for example within the housing 105 (as illustrated in Figure 1 and discussed above) or on an exterior surface of the housing 105. In some embodiments, the switches 210 are mounted on the substrate 125. In some embodiments, the switches 210 are implemented via firmware or may be solid state.

[0046] As an alternative to the illustrated dual inline pin switch 131, the input can comprise multiple DIP switches, one or more single in-line pin packages (SIP or SIPP), one or more rocker switches, one or more reed switches, one or more magnetic switches, one or more rotary switches, one or more rotary dials, one or more selectors or selector switches, one or more slide switches, one or more snap switches, one or more thumbwheels, one or more toggles or toggle switches, one or more keys or keypads, or one or more buttons or pushbuttons, to mention a few representative examples without limitation.

Luminex v. Signify
Luminex Exhibit 1007
Page 148

[0047] As further discussed below, a controller 215 operates the light emitting diodes 150, 155 according to state of the switches 210. In some example embodiments, the controller 215 comprises logic implemented in digital circuitry, for example discrete digital components or integrated circuitry. In some example embodiments, the controller 215 utilizes microprocessor-implemented logic with instructions stored in firmware or other static or non-transitory memory.

[0048] In the illustrated embodiment, the outputs of the controller 215 are connected to two MOSFET transistors 160 to control electrical flow through two light emitting diodes 150, 155. The illustrated MOSFET transistors 160 provide one example and can be replaced with other appropriate current control devices or circuits in various embodiments. The switches 210 thus configure the luminaire 100 to operate with either or both of the light emitting diodes 150, 155. The light emitting diodes 150, 155 illustrated in Figure 2 may represent two single light emitting diodes or two groups of light emitting diodes, for example.

[0049] Figure 3 illustrates a representative table 300 describing operation of the circuit 100 according to some example embodiments. In the example of Figure 3, the light emitting diode 150 produces light having a color temperature of 3,000 Kelvin, and the light emitting diode 155 produces light having a color temperature of 4,000 Kelvin.

[0050] As shown in the example table 300, when both of the switches 210 are in the on state, the controller 215 causes the light emitting diode 155 to be off and the light emitting diode 150 to be on. Accordingly, the luminaire 100 emits illumination having a color temperature of 3,000 Kelvin.

[0051] When both of the switches 210 are in the off state, the controller 215 causes the light emitting diode 155 to be on and the light emitting diode 150 to be off. Accordingly, the luminaire 100 emits illumination having a color temperature of 4,000 Kelvin.

[0052] When one of the switches 210 is in the off state and the other of the switches 210 is on the on state, the controller 215 causes the light emitting diode 155 to be on and the light emitting diode 150 to be on. The luminaire 100 thus emits

Luminex v. Signify
Luminex Exhibit 1007
Page 149

illumination having a color temperature of 3,500 Kelvin. In some other example embodiments, the controller 215 can adjust the light output of one or both of the light emitting diodes 150, 155 to set the color temperature to a specific value with the range of 3,000 to 4,000 Kelvin.

[0053] Accordingly, the controller 215 maps the four configurations of the two switches 210 to three states for configuring the two light emitting diodes 150, 155 for permanent or long-term operation. Mapping two switch configurations to a single mode of long-term operation can simplify configuration instructions and reduce errors during field configuration. The resulting configurations support multiple color temperatures of illumination from a single luminaire 100.

[0054] Some example embodiments support fewer or more than three states of illumination. For example, in one embodiment, the luminaire 100 comprises three strings of light emitting diodes 150 that have different color temperatures, such as 3,000 Kelvin, 2,700 Kelvin, and 4,000 Kelvin. In this example, in addition to the states illustrated in Figure 3 and discussed above, the switching logic can support a fourth state in which only the 2,700 Kelvin string is on.

[0055] Figure 4 illustrates a schematic of an example embodiment of the circuit 200. The schematic of Figure 4 provides one example implementation of the block diagram illustrated in Figure 3.

[0056] As illustrated in Figure 4 in schematic form, the circuit 200 conforms to the foregoing discussion of the block diagram format of Figure 3. In Figure 4, the light emitting diodes 150, 155 of Figure 3 are respectively represented with groups of light emitting diodes 150, 155. Additionally, the schematic details include a thermal protective switch 305 for guarding against overheating. Figure 4 thus provides one example schematic for an embodiment of the electrical system of the luminaire 100 illustrated in Figure 1 and discussed above.

[0057] Figure 5 shows a luminaire 500 currently known in the art. Referring to Figures 1A-5, the luminaire 500 of Figure 5 can include a housing 505 (also called an enclosure 505) that is cylindrical in shape, having a top surface 506 (also sometimes

Luminex v. Signify
Luminex Exhibit 1007
Page 150

called a top wall 506 or a top outer surface 506) and a side surface 507 (also sometimes called a side wall 507 or a side outer surface 507). These various surfaces of the housing 505 form a cavity.

[0058] Coupled to the bottom end of the housing 505 of Figure 5 is a trim 510 (substantially similar to the trim 110 shown in Figures 1A-1K above). As with the luminaire 100 of Figures 1A-1K, the luminaire 500 (sometimes also called a light fixture 500) can include one or more of a number of other components, including but not limited to a lens, a reflector, a controller, an energy storage device (e.g., battery), a power module (e.g., a LED driver), a sensor, and a number of LEDs. One or more of such components can be disposed within a cavity formed by one or more surfaces (e.g., top surface 506, side surface 507) of the housing 505, disposed on a portion (e.g., the housing 505, the trim 510) of the luminaire 500, and/or physically remote from but in communication with the luminaire 500.

[0059] Figures 6A-6C show a luminaire 600 that includes a switch 631 in accordance with certain example embodiments. Specifically, Figure 6A shows a top-side perspective view of the luminaire 600. Figure 6B shows a partially-exploded top-side perspective view of a circuit board assembly 699 of the luminaire 600. Figure 6C shows a top-side perspective view of the switch 631.

[0060] Referring to Figures 1A-6C, the luminaire 600 of Figure 6A is substantially the same as the luminaire 500 of Figure 5, except as described below. For example, the luminaire 600 of Figure 6A can include a housing 605 that is cylindrical in shape, having a top surface 606 and a side surface 607. Coupled to the bottom end of the housing 605 of Figure 6A can be a trim 610. The housing 605 can be made of one or more of a number of thermally conductive materials (e.g., stainless steel, aluminum). In such a case, the housing 605 can act as a heat sink, absorbing heat generated by one or more components (e.g., LEDs, power modules, hardware processor, energy storage device) in thermal communication with the housing 605, and subsequently dissipating the absorbed heat into the ambient environment.

Luminex v. Signify
Luminex Exhibit 1007
Page 151

[0061] As with the luminaires discussed above, the luminaire 600 can include one or more of a number of other components. Such components can be disposed within a cavity formed by the housing 605, disposed on a portion (e.g., the housing 605, the trim 610) of the luminaire 600, and/or physically remote from but in communication with the luminaire 600. In this case, as shown in Figures 6A-6C, some of those other components include a switch 631 and a number of other electrical components 663 (e.g., controller, capacitors, resistors, diodes, transistors, integrated circuits, hardware processor) disposed on a substrate 625.

[0062] The substrate 625, the electrical connector 629, the other electrical components 663, and part of the switch 631 in this case are disposed within a cavity formed by the housing 605. In order for a user to be able to access the switch 631, at least part of the switch 631 can be disposed within and protrude through an aperture 675 in a wall (in this case, the top surface 606) of the housing 605. As an alternative, part of the switch 631 can protrude through an aperture in the side surface 607 of the housing 605. Permitting a user to access the switch 631 protruding through the aperture 675 in the housing 605 facilitates configuration of the luminaire 600 and avoids the need to open and/or disassemble the luminaire 600.

[0063] The example switch 631 can be used to select one or more of a number of variables that affect the operation of the luminaire 600. For example, the switch 631 can be used to select one of a number of CCTs. The switch 631 can be any of a number of types of switches, including but not limited to one or more DIP switches, one or more SIPP switches, one or more rocker switches, one or more reed switches, one or more magnetic switches, one or more rotary switches, one or more rotary dials, one or more selectors or selector switches, one or more slide switches (as shown in Figure 6C), one or more snap switches, one or more thumbwheels, one or more toggles or toggle switches, one or more keys or keypads, and one or more buttons or pushbuttons.

[0064] As mentioned above, the switch 631 of Figures 6A-6C is a slide switch. The switch 631 has a body 671 and a number of coupling features 672 (in this case, pins) disposed on the bottom of the body 671 that allow the switch 631 to become electrically

coupled to an electrical connector 629 on the substrate 625 (and therefore also to one or more of the other components 663 mounted on the substrate 625, such as a controller, as described above). In some cases, adjacent to the coupling features 672 can be disposed one or more mechanical coupling features 679 (e.g., tabs, posts). In such a case, mechanical coupling features 679 can act as guides to properly position and align the coupling features 672 of the switch 631 relative to an electrical connector 629 mounted on the substrate 625. At the top end of the body 671 is an actuator 673 that extends outward from a plate 676. The plate 676 is disposed within the body 671 and has a length that is less than the length of the body 671. The plate 676 also corresponds to a slot 674 that traverses the top end of the body 671. The actuator 673 extends through the slot 674 and can be accessible by a user.

[0065] The switch 631 can include a number of detents and/or other features to limit or create discrete stopping locations for the actuator 673 (and so also the plate 676) along the length of the slot 674. Each of these detents and/or other features can be associated with a certain value of a variable that affects the operation of the luminaire 600. For example, if the switch 631 is used to select a CCT, the left end 681 of the slot 674 can be associated with 5000 K, detent 682 can be associated with 4000 K, detent 683 can be associated with 3500 K, detent 684 can be associated with 3000 K, and right end 685 of the slot 674 can be associated with 2700 K.

[0066] Example switches 631 can be used with a new luminaire 600. Alternatively example switches 631 can be retrofit into existing luminaires. Also, while Figures 6A-6C show that the switch 631 is disposed within and coupled to the housing 605, the switch 631 can alternatively be disposed within and/or coupled to some other portion (e.g., the trim 610) of the luminaire 600. In some cases, a luminaire can be manufactured without the switch, but with the ability to receive an example switch at a later time (e.g., during installation). For example, Figure 7 shows a luminaire 700 that is configured to receive a switch in accordance with certain example embodiments. Referring to Figures 1A-7, the luminaire 700 can be substantially the same as the luminaires discussed above, except as described below.

[0067] For example, the luminaire 700 of Figure 7 can include an housing 705 that is cylindrical in shape, having a top surface 706 and a side surface 707. Coupled to the bottom end of the housing 705 of Figure 7 can be a trim 710. Further, hanger clips 702 can be used to hold the luminaire 700 in place upon installation. In this case, the example switch is not coupled to the luminaire 700. Instead, there is a removable plug 789 disposed in the aperture 775 that traverses the top surface 706 of the housing 705. The removable plug 789 can be used to keep dust and other elements in the ambient environment from entering the cavity formed by the housing 705.

[0068] In such a case, when a user (e.g., an installer, an electrician, a homeowner) wants to install an example switch on the luminaire 700, the removable plug 789 can easily be removed (with or without a tool), and the example switch can be inserted into the connector inside the housing 705 that is subsequently exposed. Example switches can be incorporated into any of a number of different types of luminaires (light fixtures). For example, as shown in Figures 6A-7, example switches can be used with down light fixtures. Other types of luminaires that can be used with example switches can include, but are not limited to, troffer lights, under cabinet lights, pendent lights, recessed lights, and wall scones,

[0069] Figure 8 shows a top-side perspective view of another luminaire 800 currently known in the art. Referring to Figures 1A-8, the luminaire 800 of Figure 8 in this case includes a housing 805 and a remotely located junction box 890. In this case, the luminaire 800 includes a surface-mounted light fixture, and so the housing 805 is low profile. The cover 826 of the housing 805 is visible in Figure 8. An electrical cable 827 extends through a wiring aperture 803 in the cover 826. The electrical cable 827 can include one or more electrical conductors to transfer power, control, communication, data, and/or any other type of electrical signals. One end of the electrical cable 827 is connected to one or more components (e.g., light sources) disposed on and/or within the housing 805 of the luminaire 800.

[0070] The junction box 890 includes one or more walls 891 to enclose one or more electrical components (e.g., a driver). An opposing end of the electrical cable 827

is coupled to one or more of those electrical components disposed in the junction box 890. In this way, the electrical cable 827 electrically couples one or more electrical components in the junction box 890 with one or more electrical components in or on the housing 805.

[0071] Figures 9A and 9B show another luminaire 900 that includes a switch 931 in accordance with certain example embodiments. Specifically, Figure 9A shows a ~~cross-sectional side~~ top view of the luminaire 900, and Figure 9B shows a top-side-front perspective view of the luminaire 900. Referring to Figures 1A-9B, the luminaire 900 of Figures 9A and 9B is substantially the same as the luminaire 800 of Figure 8, except that the luminaire 900 of Figures 9A and 9B includes the example switch 931.

[0072] For example, the luminaire 900 of Figures 9A and 9B in this case includes a housing 905 and a remotely located junction box 990. In this case, the luminaire 900 includes a surface-mounted light fixture, and so the housing 905 is low profile. An electrical cable 927 extends through a wiring aperture 903 in the cover 926. The electrical cable 927 can include one or more electrical conductors to transfer power, control, communication, data, and/or any other type of electrical signals. One end of the electrical cable 927 is connected to one or more components (e.g., light sources [[950]]) disposed on and/or within the housing 905 of the luminaire 900.

[0073] The ~~In this case, the~~ housing 905 of the luminaire 900 can be [[is]] installed in or on any of a number of structure members (e.g., drywall that forms a ceiling [[995]], a ceiling tile). The junction box 990 is located behind the ceiling and includes one or more walls 991 to enclose one or more electrical components (e.g., a driver). An opposing end of the electrical cable 927 is coupled to one or more of those electrical components disposed in the junction box 990. In this way, the electrical cable 927 electrically couples one or more electrical components in the junction box 990 with one or more electrical components in or on the housing 905. When the housing 905 is mounted in its installed location (e.g. ~~in this case~~, the ceiling [[995]]), the entire electrical cable 927 (and so also the switch 931) is behind the structure member (e.g., ceiling [[995]]) and is inaccessible. Similarly, when the housing 905 is mounted in its installed location (e.g., the ceiling [[995]]), the junction box 990 can be inaccessible. When the

housing 905 is removed from its installed location, the junction box 990 and the electrical cable 927 (and so also the switch 931) can be accessible.

[0074] With the embodiments discussed previously, the example switch is located on the housing of the luminaire or within the housing of the luminaire. Here, the switch 931 is located outside of the housing 905 of the luminaire 900. Specifically, in this case, the switch 931 is in-line with the electrical cable 927. The switch 931 can be substantially the same as the example switches discussed above. For instance, the switch 931 can have one or more coupling features (e.g., terminal points) that are used to couple to one or more electrical conductors of one or more electrical cables 927. As another example, the switch 931 can have an actuator having multiple positions.

[0075] As yet another example, the switch 931 can be or include an inline pin switch, multiple DIP switches, one or more single in-line pin packages (SIP or SIPP), one or more rocker switches, one or more reed switches, one or more magnetic switches, one or more rotary switches, one or more rotary dials, one or more selectors or selector switches, one or more slide switches, one or more snap switches, one or more thumbwheels, one or more toggles or toggle switches, one or more keys or keypads, or one or more buttons or pushbuttons.

[0076] The switch 931 can have a range of selections that are either continuous or discrete. As with the other switches described above, the switch 931 is used to adjust the CCT output by one or more of the light sources of the luminaire 900, and each selection of the switch 931 corresponds to a CCT within a range of CCTs. When the switch 931 is in-line with the electrical cable 927, as in this example, the switch 931 can be integrated with the electrical cable 927. Alternatively, there can be two electrical cables 927, where one electrical cable 927 is coupled to the one or more components inside the junction box 990 and one side of the switch 931, and the other electrical cable 927 is coupled to the one or more components inside or on the housing 905 and the other side of the switch 931. When the switch 931 is accessible (e.g., when the housing 905 is removed from its mounting location), the switch 931 can be replaced (e.g., without the use of tools) by a user.

[0077] Figure 10 shows yet another luminaire 1000 that includes a switch 1031 in accordance with certain example embodiments. Referring to Figures 1A-10, the luminaire 1000 of Figure 10 is substantially the same as the luminaire 900 of Figures 9A and 9B, except that the switch 1031 of the luminaire 1000 of Figure 10 is in a different location separate from the housing 1005.

[0078] For example, the luminaire 1000 of Figure 10 in this case includes a housing 1005 and a remotely located junction box 1090. In this case, the luminaire 800 includes a surface-mounted light fixture, and so the housing 805 is low profile. The cover 1026 of the housing 1005 is shown in Figure 10. An electrical cable 1027 extends through a wiring aperture 1003 in the cover 1026. The electrical cable 1027 can include one or more electrical conductors to transfer power, control, communication, data, and/or any other type of electrical signals. One end of the electrical cable 1027 is connected to one or more components (e.g., light sources) disposed on and/or within the housing 1005 of the luminaire 1000. When the housing 1005 is mounted in its installed location (e.g., a ceiling), the entire electrical cable 1027 can be inaccessible. When the housing 1005 is removed from its installed location, the electrical cable 1027 can be accessible.

[0079] The junction box 1090 includes one or more walls 1091 to enclose one or more electrical components (e.g., a driver, the switch 1031). In this case, one of the walls of the junction box 1090 is removed to show the switch 1031 disposed within the cavity 1092 formed by the walls 1091 of the junction box 1090. An opposing end of the electrical cable 1027 is coupled to one or more of those electrical components disposed in the junction box 1090. In this way, the electrical cable 1027 electrically couples one or more electrical components in the junction box 1090 with one or more electrical components in or on the housing 1005. In this case, the switch 1031 is disposed within the junction box 1031. When the housing 1005 is mounted in its installed location (e.g., a ceiling), the junction box 1090 (and so also the switch 1031) can be inaccessible. When the housing 1005 is removed from its installed location, the junction box 1090 (and so also the switch 1031) can be accessible.

[0080] The switch 1031 of Figure 10 can be substantially the same as the switch 931 described above with respect to Figures 9A and 9B. For example, the switch 1031

Luminex v. Signify
Luminex Exhibit 1007
Page 157

can have a range of selections that are either continuous or discrete. As with the other switches described above, the switch 1031 is used to adjust the CCT output by one or more of the light sources of the luminaire 1000, and each selection of the switch 1031 corresponds to a CCT within a range of CCTs. As an alternative to the embodiment shown in Figure 10, rather than being disposed within the cavity 1092 of the junction box 1090, the switch 1031 can be disposed on a wall 1091 of the junction box 1090 or remotely from the junction box 1090 as well as remotely from the housing 1005 of the luminaire 1000.

[0081] As will be appreciated by those of ordinary skill, the textual and illustrated disclosure provided herein supports a wide range of embodiments and implementations. In some non-limiting example embodiments of the disclosure, a luminaire can comprise: a housing; a substrate disposed in the housing; a first plurality of light emitting diodes that are mounted to the substrate and that have a first color temperature; a second plurality of light emitting diodes that are mounted to the substrate and that have a second color temperature; and a plurality of manual switches that are disposed at the housing for permanently configuring the luminaire to: provide illumination of the first color temperature by enabling the first plurality of light emitting diodes; provide illumination of the second color temperature by enabling the second plurality of light emitting diodes; and provide illumination of a third color temperature that is between the first color temperature and the second color temperature by enabling the first plurality of light emitting diodes and the second plurality of light emitting diodes.

[0082] In some example embodiments of the luminaire, the housing can comprise an aperture that is configured for emitting area illumination, and the substrate is oriented to emit light through the aperture. In some example embodiments of the luminaire, the plurality of manual switches are mounted to the substrate. In some example embodiments of the luminaire, the plurality of manual switches are mounted in the housing. In some example embodiments of the luminaire, the plurality of manual switches are mounted to the housing. In some example embodiments of the luminaire, the plurality of manual switches comprise a dual inline pin (DIP) switch.

Luminex v. Signify
Luminex Exhibit 1007
Page 158

[0083] In some example embodiments of the luminaire, the plurality of manual switches provide two switch states, and each of the two switch states provides illumination of the third color temperature by enabling the first plurality of light emitting diodes and the second plurality of light emitting diodes. In some example embodiments of the luminaire, the housing is circular and comprises a lip configured for extending around an aperture in a ceiling. In some example embodiments of the luminaire, the housing comprises a wiring port disposed on a side of the housing. In some example embodiments of the luminaire, the housing comprises a light-emitting aperture in which the substrate is disposed.

[0084] In some example embodiments, the luminaire further comprises: an aperture disposed at a lower side of the housing; a lens disposed at the aperture for refracting light emitted by the first and second light emitting diodes; and a reflector that is disposed between the lens and the light emitting diodes and that is operative to reflect light between the first and second light emitting diodes and the lens. In some example embodiments of the luminaire, the housing is circular and comprises a lip configured for extending around an aperture in a ceiling. In some example embodiments of the luminaire, the housing comprises a wiring port disposed on a side of the housing. In some example embodiments of the luminaire, the housing forms a cavity associated with the aperture. In some example embodiments of the luminaire, the first and second light source are mounted to a substrate that is disposed at an end of the cavity. In some example embodiments, the luminaire further comprises a reflector that is disposed in the cavity between the lens and the first and second light sources, the reflector operative to reflect light between the first and second light sources and the lens.

[0085] Technology for providing a configurable a luminaire has been described. Many modifications and other embodiments of the disclosures set forth herein will come to mind to one skilled in the art to which these disclosures pertain having the benefit of the teachings presented in the foregoing descriptions and the associated drawings. Therefore, it is to be understood that the disclosures are not to be limited to the specific embodiments disclosed and that modifications and other embodiments are intended to be included within the scope of this application. Although specific terms are employed

Luminex v. Signify
Luminex Exhibit 1007
Page 159

herein, they are used in a generic and descriptive sense only and not for purposes of limitation.

Luminex v. Signify
Luminex Exhibit 1007
Page 160

AMENDMENTS TO THE SPECIFICATION

As discussed below, as a result of revising some of the originally-filed drawings, non-substantive changes were made to three paragraphs of the Specification. Consequently, please substitute the following paragraphs in the specification. No new matter has been added by way of these amendments to the specification. Clean and marked-up versions of a substitute specification showing these changes to paragraphs [0071] through [0073] are provided herewith.

Please substitute paragraph [0071] in the currently filed specification with the following:

-- **[0071]** Figures 9A and 9B show another luminaire 900 that includes a switch 931 in accordance with certain example embodiments. Specifically, Figure 9A shows a ~~cross-sectional side~~ top view of the luminaire 900, and Figure 9B shows a top-side-front perspective view of the luminaire 900. Referring to Figures 1A-9B, the luminaire 900 of Figures 9A and 9B is substantially the same as the luminaire 800 of Figure 8, except that the luminaire 900 of Figures 9A and 9B includes the example switch 931. --

Please substitute paragraph [0072] in the currently filed specification with the following:

-- **[0072]** For example, the luminaire 900 of Figures 9A and 9B in this case includes a housing 905 and a remotely located junction box 990. In this case, the luminaire 900 includes a surface-mounted light fixture, and so the housing 905 is low profile. An electrical cable 927 extends through a wiring aperture 903 in the cover 926. The electrical cable 927 can include one or more electrical conductors to transfer power, control, communication, data, and/or any other type of electrical signals. One end of the electrical cable 927 is connected to one or more components (e.g., light sources [[950]]) disposed on and/or within the housing 905 of the luminaire 900. --

Please substitute paragraph [0073] in the currently filed specification with the following:

-- **[0073]** The ~~In this case, the~~ housing 905 of the luminaire 900 can be [[is]] installed in or on any of a number of structure members (e.g., drywall that forms a ceiling [[995]], a ceiling tile). The junction box 990 is located behind the ceiling and includes one or more walls 991 to enclose one or more electrical components (e.g., a driver). An

opposing end of the electrical cable 927 is coupled to one or more of those electrical components disposed in the junction box 990. In this way, the electrical cable 927 electrically couples one or more electrical components in the junction box 990 with one or more electrical components in or on the housing 905. When the housing 905 is mounted in its installed location (e.g. ~~in this case~~, the ceiling [[995]]), the entire electrical cable 927 (and so also the switch 931) is behind the structure member (e.g., ceiling [[995]]) and is inaccessible. Similarly, when the housing 905 is mounted in its installed location (e.g., the ceiling [[995]]), the junction box 990 can be inaccessible. When the housing 905 is removed from its installed location, the junction box 990 and the electrical cable 927 (and so also the switch 931) can be accessible. --

SUBSTITUTE SPECIFICATION
U.S. PATENT APPLICATION NO. 16/014,394
CLEAN VERSION

CONFIGURABLE LIGHTING SYSTEM

CROSS REFERENCE TO RELATED APPLICATIONS

[0001] This application is a continuation-in-part of and claims priority to U.S. Patent Application Serial Number 15/811,062, titled "Configurable Lighting System" and filed on November 13, 2017, which is a continuation application of and claims priority to U.S. Patent Application No. 15/435,141, filed February 16, 2017, and titled "Configurable Lighting System," which claims priority to U.S. Provisional Patent Application Number 62/297,424 filed February 19, 2016, and titled "Configurable Lighting System". The entire contents of these aforementioned applications are hereby incorporated herein by reference.

TECHNICAL FIELD

[0002] Embodiments of the technology relate generally to lighting systems and more specifically to lighting systems that can be readily configured to produce illumination of different color temperatures.

BACKGROUND

[0003] For illumination applications, light emitting diodes (LEDs) offer substantial potential benefit associated with their energy efficiency, light quality, and compact size. However, to realize the full potential benefits offered by light emitting diodes, new technologies are needed.

[0004] With luminaires that incorporate incandescent or fluorescent technology, some flexibility can be obtained by swapping lamps to meet user preferences. In such luminaires, lamp selection can provide flexibility in terms of correlated color temperature (CCT or color temperature) and light output (lumen output). For example, a compact fluorescent downlight might accept 6-, 32-, and 42-watt lamps in 2700, 3000, and 3500 K CCT. Additionally, changing lamp position and focal point in a reflector of an

Luminex v. Signify
Luminex Exhibit 1007
Page 163

incandescent or fluorescent fixture can change the fixture spacing criteria (SC) of a luminaire.

[0005] In contrast, conventional light-emitting-diode-based luminaires typically offer reduced flexibility when the luminaire's light-emitting-diode-based light source is permanently attached to the luminaire. Stocking conventional light-emitting-diode-based luminaires at distribution to accommodate multiple configurations that users may desire can entail maintaining a relatively large or cumbersome inventory.

[0006] Need is apparent for a technology to provide a light emitting diode system that can adapt to various applications, for example by delivering multiple color temperatures, multiple lumens, and/or multiple photometric distributions. Need further exists for a capability to enable a single luminaire to be stocked at distribution and then quickly configured according to application parameters and deployment dictates. Need further exists for luminaires that are both energy efficient and flexible. A capability addressing one or more such needs, or some other related deficiency in the art, would support improved illumination systems and more widespread utilization of light emitting diodes in lighting applications.

SUMMARY

[0007] In some aspects of the disclosure, a system can configure a luminaire for providing illumination of a selected color temperature, a selected lumen output, or a selected photometric distribution based on an input. The input may be field selectable or may be selectable at a distribution center or at a late stage of luminaire manufacture, for example.

[0008] In some aspects of the disclosure, the luminaire can comprise at least two light sources having different color temperatures. In a first configuration, the luminaire can produce illumination of a first color temperature using a first one of the light sources. In a second configuration, the luminaire can produce illumination of a second color temperature using a second one of the light sources. In a third configuration, the luminaire can produce illumination of a third color temperature using both of the first and

Luminex v. Signify
Luminex Exhibit 1007
Page 164

second the light sources. The third color temperature may be between the first and second color temperatures. The value of the third color temperature within a range between the first and second color temperatures can be controlled by manipulating the relative amounts of light output by the first and second light sources. That is, adjusting the lumen outputs of the first and second light sources can define the color temperature of the illumination produced by the luminaire in the third configuration.

[0009] In some aspects of the disclosure, the luminaire can comprise at least two light sources having different lumen outputs. In a first configuration, the luminaire can produce illumination of a first lumen output using a first one of the light sources. In a second configuration, the luminaire can produce illumination of a second lumen output using a second one of the light sources. In a third configuration, the luminaire can produce illumination of a third lumen output using both of the first and second light sources.

[0010] In some aspects of the disclosure, the luminaire can comprise at least two light sources having different photometric distributions. In a first configuration, the luminaire can produce illumination of a first photometric distribution using a first one of the light sources. In a second configuration, the luminaire can produce illumination of a second photometric distribution using a second one of the light sources. In a third configuration, the luminaire can produce illumination of a third photometric distribution using both of the first and second light sources.

[0011] In some aspects of the disclosure, a circuit and an associated input to the circuit can configure a luminaire for providing illumination having a selected property, for example a selected color temperature, a selected lumen output, or a selected photometric distribution. The input can be settable to a first number of states. The circuit can map the first number of states into a second number of states that is less than the first number of states. For example, the input can have four states and the circuit can map these four states into three states. The three states can correspond to three different values of the illumination property, for example three different color temperatures, three different lumen outputs, or three different photometric distributions.

Luminex v. Signify
Luminex Exhibit 1007
Page 165

[0012] The foregoing discussion of controlling illumination is for illustrative purposes only. Various aspects of the present disclosure may be more clearly understood and appreciated from a review of the following text and by reference to the associated drawings and the claims that follow. Other aspects, systems, methods, features, advantages, and objects of the present disclosure will become apparent to one with skill in the art upon examination of the following drawings and text. It is intended that all such aspects, systems, methods, features, advantages, and objects are to be included within this description and covered by this application and by the appended claims of the application.

BRIEF DESCRIPTION OF THE DRAWINGS

[0013] Figures 1A, 1B, 1C, 1D, 1E, 1F, 1G, 1H, 1I, 1J, and 1K (collectively Figure 1) illustrate views of a luminaire in accordance with some example embodiments of the disclosure.

[0014] Figure 2 illustrates a functional block diagram of a circuit that a luminaire can comprise in accordance with some example embodiments of the disclosure.

[0015] Figure 3 illustrates a state table for a circuit that a luminaire can comprise in accordance with some example embodiments of the disclosure.

[0016] Figure 4 illustrates a schematic of a circuit that a luminaire can comprise in accordance with some example embodiments of the disclosure.

[0017] Figure 5 shows a luminaire currently known in the art.

[0018] Figures 6A-6C show a luminaire that includes a switch in accordance with certain example embodiments.

[0019] Figure 7 shows a luminaire that is configured to receive a switch in accordance with certain example embodiments.

[0020] Figure 8 shows another luminaire currently known in the art.

[0021] Figures 9A and 9B show another luminaire that includes a switch in accordance with certain example embodiments.

Luminex v. Signify
Luminex Exhibit 1007
Page 166

[0022] Figure 10 shows yet another luminaire that includes a switch in accordance with certain example embodiments.

[0023] Many aspects of the disclosure can be better understood with reference to the above drawings. The drawings illustrate only example embodiments and are therefore not to be considered limiting of the embodiments described, as other equally effective embodiments are within the scope and spirit of this disclosure. The elements and features shown in the drawings are not necessarily drawn to scale, emphasis instead being placed upon clearly illustrating principles of the embodiments. Additionally, certain dimensions or positionings may be exaggerated to help visually convey certain principles. In the drawings, similar reference numerals among different figures designate like or corresponding, but not necessarily identical, elements.

DETAILED DESCRIPTION OF EXAMPLE EMBODIMENTS

[0024] In some example embodiments of the disclosure, a luminaire can comprise multiple groups of light emitting diodes of different color temperatures and a constant current power supply for powering the light emitting diodes. The power supply can utilize a switching scheme that can turn each group of light emitting diodes on and off to change the color temperature of the luminaire. In some example embodiments, the power supply can further vary the relative intensities of the light emitting diodes to manipulate the color temperature of the luminaire within a range.

[0025] For example, the luminaire can comprise a 3,000 K group of light emitting diodes and a 4,000 K group of light emitting diodes. When only the 3,000 K group is on, the luminaire can deliver 3,000 K illumination. When only the 4,000 K group is on, the luminaire can deliver 4,000 K illumination. When the 3,000 K group and the 4,000 K group are both on, the luminaire can deliver 3,500 K illumination. If the 4,000 K group of light emitting diodes is concurrently operated at a low lumen output and the 3,000 K group is operated at a high lumen output, the luminaire may deliver illumination of another selected color temperature, for example 3,100 K.

Luminex v. Signify
Luminex Exhibit 1007
Page 167

[0026] In some example embodiments, a controller can adjust lumen output automatically to maintain constant delivered lumens across multiple color temperatures or to suite application requirements. The controller implements the adjustment utilizing programmable driver current and/or via turning on and off various groups of light emitting diodes. Configurable color temperature or lumen output can function in combination with integral dimming, for example to facilitate interface with building automation, sensors, and dimmers.

[0027] In some example embodiments, luminaires can achieve an additional level of flexible configuration at a distribution center using interchangeable optics. For example, primary optics can provide medium distribution (e.g. spacing criteria equals 1.0), while a diffuser or concentrator lens can be used to achieve wide distribution (e.g. spacing criteria equals 1.4), and narrow distribution (e.g. spacing criteria equals 0.4).

[0028] In some example embodiments, a luminaire's configuration of delivered lumens and color temperatures can be set at the factory, at distribution, or in the field. To meet current and emerging code compliance, performance markings on a luminaire can indicate and correspond to the desired setting. Economical, field-installed nameplates can identify the various electrical and optical performance ratings and, when installed, permanently program the delivered lumens and color temperature. Other settings, such as dimming protocols, can likewise be configured. The interface between the nameplate and internal logic can use mechanical, electrical or optical means, for example.

[0029] Accordingly, in some embodiments of the disclosure, the technology provides product markings and supports regulatory compliance. For example, nameplates can indicate energy codes and rebate opportunities, for compliance with product labeling and to facilitate compliance confirmation by local authorities who may have jurisdiction. Further, luminaires that include example switches can be subject to meeting certain standards and/or requirements. For example, Underwriters Laboratories (UL), the National Electric Code (NEC), the National Electrical Manufacturers Association (NEMA), the International Electrotechnical Commission (IEC), the Federal Communication Commission (FCC), the Illuminating Engineering Society (IES), and the

Luminex v. Signify
Luminex Exhibit 1007
Page 168

Institute of Electrical and Electronics Engineers (IEEE) set standards as to luminaires. Use of example embodiments described herein meet (and/or allow a corresponding luminaire to meet) such standards when required.

[0030] If a component of a figure is described but not expressly shown or labeled in that figure, the label used for a corresponding component in another figure can be inferred to that component. Conversely, if a component in a figure is labeled but not described, the description for such component can be substantially the same as the description for the corresponding component in another figure. Further, a statement that a particular embodiment (e.g., as shown in a figure herein) does not have a particular feature or component does not mean, unless expressly stated, that such embodiment is not capable of having such feature or component. For example, for purposes of present or future claims herein, a feature or component that is described as not being included in an example embodiment shown in one or more particular drawings is capable of being included in one or more claims that correspond to such one or more particular drawings herein.

[0031] Example embodiments of configurable lighting systems will be described more fully hereinafter with reference to the accompanying drawings, in which example embodiments of configurable lighting systems are shown. Configurable lighting systems may, however, be embodied in many different forms and should not be construed as limited to the example embodiments set forth herein. Rather, these example embodiments are provided so that this disclosure will be thorough and complete, and will fully convey the scope of configurable lighting systems to those of ordinary skill in the art. Like, but not necessarily the same, elements (also sometimes called components) in the various figures are denoted by like reference numerals for consistency.

[0032] Terms such as “first”, “second”, “third”, “fourth”, “fifth”, “top”, bottom”, “side”, and “within” are used merely to distinguish one component (or part of a component or state of a component) from another. Such terms are not meant to denote a preference or a particular orientation, and are not meant to limit embodiments of configurable lighting systems. In the following detailed description of the example embodiments, numerous specific details are set forth in order to provide a more thorough

understanding of the invention. However, it will be apparent to one of ordinary skill in the art that the invention may be practiced without these specific details. In other instances, well-known features have not been described in detail to avoid unnecessarily complicating the description.

[0033] Referring now to Figure 1, multiple views of the luminaire 100 are shown. Figure 1A illustrates a side perspective view of the luminaire 100. Figure 1B illustrates a top perspective view of the luminaire 100. Figure 1C illustrates a view of the light-emitting bottom of the luminaire 100, showing a lens 120 in a light-emitting aperture 115 of the luminaire 100. Figure 1D illustrates a view of the light-emitting bottom of the luminaire 100 with the lens 120 removed from the light-emitting aperture 115 of the luminaire. Figure 1E illustrates a view of the light-emitting bottom of the luminaire 100 with the lens 120 and an associated reflector 130 removed from the light-emitting aperture 115 of the luminaire. Figure 1F illustrates a cutaway perspective view of the luminaire 100. Figure 1G illustrates another cutaway perspective view of the luminaire 100. Figure 1H illustrates another cutaway view of the luminaire 100. Figures 1I, 1J, and 1K provide detailed views of a portion of the luminaire 100 comprising a cover 126 and an associated access aperture 129 for providing internal access to the luminaire 100. In Figure 1I, the cover 126 is fully removed. In Figure 1J, the cover 126 is positioned adjacent the access aperture 129, for example in connection with attachment or removal of the cover 126. In Figure 1K, the cover 126 is attached to the luminaire 100.

[0034] As best seen in the views of Figures 1A and 1B, the illustrated example luminaire 100 is suited for inserting in an aperture in a ceiling to provide overhead lighting. In this example embodiment, the luminaire 100 can be characterized as an overhead light or a recessed ceiling light. Various other indoor and outdoor luminaires that may be mounted in a wide range of orientations can be substituted for the luminaire 100 illustrated in Figure 1.

[0035] The illustrated example luminaire 100 of Figure 1 comprises a housing 105 that is circular with a protruding trim 110 that extends circumferentially about the

housing 105. When the luminaire 100 is installed in a ceiling aperture, the rim 100 circumscribes and covers the edge of the ceiling aperture for aesthetics, for support, and for blocking of debris from above the ceiling. Hanger clips 102 hold the luminaire 100 in place in installation.

[0036] As best illustrated in Figures 1I, 1J, and 1K, the example luminaire 100 comprises an access aperture 129 and an associated cover 126. The access aperture 129 provides access to the interior of the luminaire housing 105, for example in the field and/or during luminaire installation. An installer can remove the cover 126 and manually set a dual inline pin (DIP) switch 131 to configure the luminaire 100 for long-term operation providing illumination with a selected color temperature, a selected lumen output, and/or a selected photometric distribution. As illustrated, the dual inline pin switch 131 is mounted on a circuit board adjacent the access aperture 129, thereby facilitating convenient and efficient access in the field or at a distribution center, for example.

[0037] An electrical cable 127 extends through a wiring aperture 103 in the cover 126. The electrical cable 127 terminates in a plug 132 that mates with a receptacle 133 that is mounted inside the housing 105 adjacent the access aperture 129 for convenient field access.

[0038] As illustrated, the example cover 126 comprises two notches 123, 124 that each receives a respective screw 128 for holding the cover 126 in place. The notch 123 is disposed on the right side of the cover 126 and is sized to receive one of the screws 128. Meanwhile, the notch 124 is disposed on a left side of the cover 126 and is sized to receive the other screw 128.

[0039] The left notch 124 and the right notch 123 are oriented so that the cover 126 is rotatable about the right screw 128 when the right screw 128 is loosely disposed in the right notch 123. In other words, cover rotation can occur when the right screw 128 is in the right notch 123 with threads engaged but prior to tightening. In this position, the cover 126 can rotate clockwise about the right screw 128. Thus, the right screw 128 provides an axis of rotation for the cover 126. This clockwise rotation facilitates

convenient manipulation of the cover 126 by a person working the cover 126 to cover the access aperture 129, with the screws 128 engaged but not fully tightened. The clockwise rotation of the cover 126 about the right screw 128 provides the person with a capability to slide the left notch 124 of the cover 126 conveniently under the head of the left screw 128. Once the cover 126 is rotated so the left notch 124 is under the head of the left screw 128, the person (for example an installer) can tighten the two screws 128 to secure the cover 126.

[0040] To remove the cover 126, the person loosens the two screws 128 and then rotates the cover 126 counterclockwise about the right screw 128 so that the left notch 124 moves out from under the head of the left screw 128. Once the left notch 124 is free from the left screw 128, the installer can pull the right notch 123 out from under the right screw 128 to fully remove the cover 126.

[0041] As best seen in the views of Figures 1A, 1C, 1F, and 1G, the lens 120 of the luminaire 100 is positioned adjacent the lower, exit side of the light-emitting aperture 115. As illustrated, the lens 120 can mix and blend light emitted by two groups of light emitting diodes 150, 155, with each group having a different color temperature. In some embodiments, the two groups of light emitting diodes 150, 155 may have color temperatures that differ by at least 500 Kelvin, for example. The group of light emitting diodes 150 can be characterized as one light emitting diode light source, while the group of light emitting diodes 155 can be characterized as another light emitting diode light source. Other embodiments of a light emitting diode light source may have a single light emitting diode or more light emitting diodes than the embodiment illustrated in Figure 1. A reflector 130 is disposed in and lines the aperture 115 to guide and manage the emitted light between the light emitting diodes 150, 155 and the lens 120. In some embodiments, an upper lens (not illustrated) replaces the reflector 130.

[0042] The light emitting diodes 150, 155 are mounted on a substrate 125, for example a circuit board, and form part of a circuit 200. In the illustrated embodiment, the light emitting diodes 150, 155 are interspersed. In other embodiments, the light emitting diodes 150, 155 may be separated from one another or spatially segregated according to

Luminex v. Signify
Luminex Exhibit 1007
Page 172

color temperature or other appropriate parameter. As discussed in further detail below, the circuit 200 supplies electricity to the light emitting diodes 150, 155 with a level of flexibility that facilitates multiple configurations suited to different applications and installation parameters.

[0043] Turning to Figures 2, 3, and 4, some example embodiments of the circuit 200 will be discussed in further detail with example reference to the luminaire 100. The circuit 200 can be applied to other indoor and outdoor luminaires.

[0044] Referring now to Figure 2, this figure illustrates an embodiment of the circuit 200 in an example block diagram form. The circuit 200 comprises a DC power supply 205 for supplying electrical energy that the circuit 200 delivers to the light emitting diodes 150, 155. In an example embodiment, the circuit 200 comprises a light emitting diode driver.

[0045] The dual inline pin switch 131 comprises individual switches 210 that provide an input for configuring the luminaire 100 to operate at a selected color temperature. In the illustrated embodiment, the circuit 200 comprises two manual switches 210. Other embodiments may have fewer or more switches 210. In various embodiments, the switches 210 can be mounted to the housing 105 of the luminaire 100, for example within the housing 105 (as illustrated in Figure 1 and discussed above) or on an exterior surface of the housing 105. In some embodiments, the switches 210 are mounted on the substrate 125. In some embodiments, the switches 210 are implemented via firmware or may be solid state.

[0046] As an alternative to the illustrated dual inline pin switch 131, the input can comprise multiple DIP switches, one or more single in-line pin packages (SIP or SIPP), one or more rocker switches, one or more reed switches, one or more magnetic switches, one or more rotary switches, one or more rotary dials, one or more selectors or selector switches, one or more slide switches, one or more snap switches, one or more thumbwheels, one or more toggles or toggle switches, one or more keys or keypads, or one or more buttons or pushbuttons, to mention a few representative examples without limitation.

Luminex v. Signify
Luminex Exhibit 1007
Page 173

[0047] As further discussed below, a controller 215 operates the light emitting diodes 150, 155 according to state of the switches 210. In some example embodiments, the controller 215 comprises logic implemented in digital circuitry, for example discrete digital components or integrated circuitry. In some example embodiments, the controller 215 utilizes microprocessor-implemented logic with instructions stored in firmware or other static or non-transitory memory.

[0048] In the illustrated embodiment, the outputs of the controller 215 are connected to two MOSFET transistors 160 to control electrical flow through two light emitting diodes 150, 155. The illustrated MOSFET transistors 160 provide one example and can be replaced with other appropriate current control devices or circuits in various embodiments. The switches 210 thus configure the luminaire 100 to operate with either or both of the light emitting diodes 150, 155. The light emitting diodes 150, 155 illustrated in Figure 2 may represent two single light emitting diodes or two groups of light emitting diodes, for example.

[0049] Figure 3 illustrates a representative table 300 describing operation of the circuit 100 according to some example embodiments. In the example of Figure 3, the light emitting diode 150 produces light having a color temperature of 3,000 Kelvin, and the light emitting diode 155 produces light having a color temperature of 4,000 Kelvin.

[0050] As shown in the example table 300, when both of the switches 210 are in the on state, the controller 215 causes the light emitting diode 155 to be off and the light emitting diode 150 to be on. Accordingly, the luminaire 100 emits illumination having a color temperature of 3,000 Kelvin.

[0051] When both of the switches 210 are in the off state, the controller 215 causes the light emitting diode 155 to be on and the light emitting diode 150 to be off. Accordingly, the luminaire 100 emits illumination having a color temperature of 4,000 Kelvin.

[0052] When one of the switches 210 is in the off state and the other of the switches 210 is on the on state, the controller 215 causes the light emitting diode 155 to be on and the light emitting diode 150 to be on. The luminaire 100 thus emits

Luminex v. Signify
Luminex Exhibit 1007
Page 174

illumination having a color temperature of 3,500 Kelvin. In some other example embodiments, the controller 215 can adjust the light output of one or both of the light emitting diodes 150, 155 to set the color temperature to a specific value with the range of 3,000 to 4,000 Kelvin.

[0053] Accordingly, the controller 215 maps the four configurations of the two switches 210 to three states for configuring the two light emitting diodes 150, 155 for permanent or long-term operation. Mapping two switch configurations to a single mode of long-term operation can simplify configuration instructions and reduce errors during field configuration. The resulting configurations support multiple color temperatures of illumination from a single luminaire 100.

[0054] Some example embodiments support fewer or more than three states of illumination. For example, in one embodiment, the luminaire 100 comprises three strings of light emitting diodes 150 that have different color temperatures, such as 3,000 Kelvin, 2,700 Kelvin, and 4,000 Kelvin. In this example, in addition to the states illustrated in Figure 3 and discussed above, the switching logic can support a fourth state in which only the 2,700 Kelvin string is on.

[0055] Figure 4 illustrates a schematic of an example embodiment of the circuit 200. The schematic of Figure 4 provides one example implementation of the block diagram illustrated in Figure 3.

[0056] As illustrated in Figure 4 in schematic form, the circuit 200 conforms to the foregoing discussion of the block diagram format of Figure 3. In Figure 4, the light emitting diodes 150, 155 of Figure 3 are respectively represented with groups of light emitting diodes 150, 155. Additionally, the schematic details include a thermal protective switch 305 for guarding against overheating. Figure 4 thus provides one example schematic for an embodiment of the electrical system of the luminaire 100 illustrated in Figure 1 and discussed above.

[0057] Figure 5 shows a luminaire 500 currently known in the art. Referring to Figures 1A-5, the luminaire 500 of Figure 5 can include a housing 505 (also called an enclosure 505) that is cylindrical in shape, having a top surface 506 (also sometimes

Luminex v. Signify
Luminex Exhibit 1007
Page 175

called a top wall 506 or a top outer surface 506) and a side surface 507 (also sometimes called a side wall 507 or a side outer surface 507). These various surfaces of the housing 505 form a cavity.

[0058] Coupled to the bottom end of the housing 505 of Figure 5 is a trim 510 (substantially similar to the trim 110 shown in Figures 1A-1K above). As with the luminaire 100 of Figures 1A-1K, the luminaire 500 (sometimes also called a light fixture 500) can include one or more of a number of other components, including but not limited to a lens, a reflector, a controller, an energy storage device (e.g., battery), a power module (e.g., a LED driver), a sensor, and a number of LEDs. One or more of such components can be disposed within a cavity formed by one or more surfaces (e.g., top surface 506, side surface 507) of the housing 505, disposed on a portion (e.g., the housing 505, the trim 510) of the luminaire 500, and/or physically remote from but in communication with the luminaire 500.

[0059] Figures 6A-6C show a luminaire 600 that includes a switch 631 in accordance with certain example embodiments. Specifically, Figure 6A shows a top-side perspective view of the luminaire 600. Figure 6B shows a partially-exploded top-side perspective view of a circuit board assembly 699 of the luminaire 600. Figure 6C shows a top-side perspective view of the switch 631.

[0060] Referring to Figures 1A-6C, the luminaire 600 of Figure 6A is substantially the same as the luminaire 500 of Figure 5, except as described below. For example, the luminaire 600 of Figure 6A can include a housing 605 that is cylindrical in shape, having a top surface 606 and a side surface 607. Coupled to the bottom end of the housing 605 of Figure 6A can be a trim 610. The housing 605 can be made of one or more of a number of thermally conductive materials (e.g., stainless steel, aluminum). In such a case, the housing 605 can act as a heat sink, absorbing heat generated by one or more components (e.g., LEDs, power modules, hardware processor, energy storage device) in thermal communication with the housing 605, and subsequently dissipating the absorbed heat into the ambient environment.

Luminex v. Signify
Luminex Exhibit 1007
Page 176

[0061] As with the luminaires discussed above, the luminaire 600 can include one or more of a number of other components. Such components can be disposed within a cavity formed by the housing 605, disposed on a portion (e.g., the housing 605, the trim 610) of the luminaire 600, and/or physically remote from but in communication with the luminaire 600. In this case, as shown in Figures 6A-6C, some of those other components include a switch 631 and a number of other electrical components 663 (e.g., controller, capacitors, resistors, diodes, transistors, integrated circuits, hardware processor) disposed on a substrate 625.

[0062] The substrate 625, the electrical connector 629, the other electrical components 663, and part of the switch 631 in this case are disposed within a cavity formed by the housing 605. In order for a user to be able to access the switch 631, at least part of the switch 631 can be disposed within and protrude through an aperture 675 in a wall (in this case, the top surface 606) of the housing 605. As an alternative, part of the switch 631 can protrude through an aperture in the side surface 607 of the housing 605. Permitting a user to access the switch 631 protruding through the aperture 675 in the housing 605 facilitates configuration of the luminaire 600 and avoids the need to open and/or disassemble the luminaire 600.

[0063] The example switch 631 can be used to select one or more of a number of variables that affect the operation of the luminaire 600. For example, the switch 631 can be used to select one of a number of CCTs. The switch 631 can be any of a number of types of switches, including but not limited to one or more DIP switches, one or more SIPP switches, one or more rocker switches, one or more reed switches, one or more magnetic switches, one or more rotary switches, one or more rotary dials, one or more selectors or selector switches, one or more slide switches (as shown in Figure 6C), one or more snap switches, one or more thumbwheels, one or more toggles or toggle switches, one or more keys or keypads, and one or more buttons or pushbuttons.

[0064] As mentioned above, the switch 631 of Figures 6A-6C is a slide switch. The switch 631 has a body 671 and a number of coupling features 672 (in this case, pins) disposed on the bottom of the body 671 that allow the switch 631 to become electrically

coupled to an electrical connector 629 on the substrate 625 (and therefore also to one or more of the other components 663 mounted on the substrate 625, such as a controller, as described above). In some cases, adjacent to the coupling features 672 can be disposed one or more mechanical coupling features 679 (e.g., tabs, posts). In such a case, mechanical coupling features 679 can act as guides to properly position and align the coupling features 672 of the switch 631 relative to an electrical connector 629 mounted on the substrate 625. At the top end of the body 671 is an actuator 673 that extends outward from a plate 676. The plate 676 is disposed within the body 671 and has a length that is less than the length of the body 671. The plate 676 also corresponds to a slot 674 that traverses the top end of the body 671. The actuator 673 extends through the slot 674 and can be accessible by a user.

[0065] The switch 631 can include a number of detents and/or other features to limit or create discrete stopping locations for the actuator 673 (and so also the plate 676) along the length of the slot 674. Each of these detents and/or other features can be associated with a certain value of a variable that affects the operation of the luminaire 600. For example, if the switch 631 is used to select a CCT, the left end 681 of the slot 674 can be associated with 5000 K, detent 682 can be associated with 4000 K, detent 683 can be associated with 3500 K, detent 684 can be associated with 3000 K, and right end 685 of the slot 674 can be associated with 2700 K.

[0066] Example switches 631 can be used with a new luminaire 600. Alternatively example switches 631 can be retrofit into existing luminaires. Also, while Figures 6A-6C show that the switch 631 is disposed within and coupled to the housing 605, the switch 631 can alternatively be disposed within and/or coupled to some other portion (e.g., the trim 610) of the luminaire 600. In some cases, a luminaire can be manufactured without the switch, but with the ability to receive an example switch at a later time (e.g., during installation). For example, Figure 7 shows a luminaire 700 that is configured to receive a switch in accordance with certain example embodiments. Referring to Figures 1A-7, the luminaire 700 can be substantially the same as the luminaires discussed above, except as described below.

[0067] For example, the luminaire 700 of Figure 7 can include an housing 705 that is cylindrical in shape, having a top surface 706 and a side surface 707. Coupled to the bottom end of the housing 705 of Figure 7 can be a trim 710. Further, hanger clips 702 can be used to hold the luminaire 700 in place upon installation. In this case, the example switch is not coupled to the luminaire 700. Instead, there is a removable plug 789 disposed in the aperture 775 that traverses the top surface 706 of the housing 705. The removable plug 789 can be used to keep dust and other elements in the ambient environment from entering the cavity formed by the housing 705.

[0068] In such a case, when a user (e.g., an installer, an electrician, a homeowner) wants to install an example switch on the luminaire 700, the removable plug 789 can easily be removed (with or without a tool), and the example switch can be inserted into the connector inside the housing 705 that is subsequently exposed. Example switches can be incorporated into any of a number of different types of luminaires (light fixtures). For example, as shown in Figures 6A-7, example switches can be used with down light fixtures. Other types of luminaires that can be used with example switches can include, but are not limited to, troffer lights, under cabinet lights, pendent lights, recessed lights, and wall scones,

[0069] Figure 8 shows a top-side perspective view of another luminaire 800 currently known in the art. Referring to Figures 1A-8, the luminaire 800 of Figure 8 in this case includes a housing 805 and a remotely located junction box 890. In this case, the luminaire 800 includes a surface-mounted light fixture, and so the housing 805 is low profile. The cover 826 of the housing 805 is visible in Figure 8. An electrical cable 827 extends through a wiring aperture 803 in the cover 826. The electrical cable 827 can include one or more electrical conductors to transfer power, control, communication, data, and/or any other type of electrical signals. One end of the electrical cable 827 is connected to one or more components (e.g., light sources) disposed on and/or within the housing 805 of the luminaire 800.

[0070] The junction box 890 includes one or more walls 891 to enclose one or more electrical components (e.g., a driver). An opposing end of the electrical cable 827

is coupled to one or more of those electrical components disposed in the junction box 890. In this way, the electrical cable 827 electrically couples one or more electrical components in the junction box 890 with one or more electrical components in or on the housing 805.

[0071] Figures 9A and 9B show another luminaire 900 that includes a switch 931 in accordance with certain example embodiments. Specifically, Figure 9A shows a top view of the luminaire 900, and Figure 9B shows a top-side-front perspective view of the luminaire 900. Referring to Figures 1A-9B, the luminaire 900 of Figures 9A and 9B is substantially the same as the luminaire 800 of Figure 8, except that the luminaire 900 of Figures 9A and 9B includes the example switch 931.

[0072] For example, the luminaire 900 of Figures 9A and 9B in this case includes a housing 905 and a remotely located junction box 990. In this case, the luminaire 900 includes a surface-mounted light fixture, and so the housing 905 is low profile. An electrical cable 927 extends through a wiring aperture 903 in the cover 926. The electrical cable 927 can include one or more electrical conductors to transfer power, control, communication, data, and/or any other type of electrical signals. One end of the electrical cable 927 is connected to one or more components (e.g., light sources) disposed on and/or within the housing 905 of the luminaire 900.

[0073] The housing 905 of the luminaire 900 can be installed in or on any of a number of structure members (e.g., drywall that forms a ceiling, a ceiling tile). The junction box 990 is located behind the ceiling and includes one or more walls 991 to enclose one or more electrical components (e.g., a driver). An opposing end of the electrical cable 927 is coupled to one or more of those electrical components disposed in the junction box 990. In this way, the electrical cable 927 electrically couples one or more electrical components in the junction box 990 with one or more electrical components in or on the housing 905. When the housing 905 is mounted in its installed location (e.g., the ceiling), the entire electrical cable 927 (and so also the switch 931) is behind the structure member (e.g., ceiling) and is inaccessible. Similarly, when the housing 905 is mounted in its installed location (e.g., the ceiling), the junction box 990 can be inaccessible. When the housing 905 is removed from its installed location, the

Luminex v. Signify
Luminex Exhibit 1007
Page 180

junction box 990 and the electrical cable 927 (and so also the switch 931) can be accessible.

[0074] With the embodiments discussed previously, the example switch is located on the housing of the luminaire or within the housing of the luminaire. Here, the switch 931 is located outside of the housing 905 of the luminaire 900. Specifically, in this case, the switch 931 is in-line with the electrical cable 927. The switch 931 can be substantially the same as the example switches discussed above. For instance, the switch 931 can have one or more coupling features (e.g., terminal points) that are used to couple to one or more electrical conductors of one or more electrical cables 927. As another example, the switch 931 can have an actuator having multiple positions.

[0075] As yet another example, the switch 931 can be or include an inline pin switch, multiple DIP switches, one or more single in-line pin packages (SIP or SIPP), one or more rocker switches, one or more reed switches, one or more magnetic switches, one or more rotary switches, one or more rotary dials, one or more selectors or selector switches, one or more slide switches, one or more snap switches, one or more thumbwheels, one or more toggles or toggle switches, one or more keys or keypads, or one or more buttons or pushbuttons.

[0076] The switch 931 can have a range of selections that are either continuous or discrete. As with the other switches described above, the switch 931 is used to adjust the CCT output by one or more of the light sources of the luminaire 900, and each selection of the switch 931 corresponds to a CCT within a range of CCTs. When the switch 931 is in-line with the electrical cable 927, as in this example, the switch 931 can be integrated with the electrical cable 927. Alternatively, there can be two electrical cables 927, where one electrical cable 927 is coupled to the one or more components inside the junction box 990 and one side of the switch 931, and the other electrical cable 927 is coupled to the one or more components inside or on the housing 905 and the other side of the switch 931. When the switch 931 is accessible (e.g., when the housing 905 is removed from its mounting location), the switch 931 can be replaced (e.g., without the use of tools) by a user.

[0077] Figure 10 shows yet another luminaire 1000 that includes a switch 1031 in accordance with certain example embodiments. Referring to Figures 1A-10, the luminaire 1000 of Figure 10 is substantially the same as the luminaire 900 of Figures 9A and 9B, except that the switch 1031 of the luminaire 1000 of Figure 10 is in a different location separate from the housing 1005.

[0078] For example, the luminaire 1000 of Figure 10 in this case includes a housing 1005 and a remotely located junction box 1090. In this case, the luminaire 800 includes a surface-mounted light fixture, and so the housing 805 is low profile. The cover 1026 of the housing 1005 is shown in Figure 10. An electrical cable 1027 extends through a wiring aperture 1003 in the cover 1026. The electrical cable 1027 can include one or more electrical conductors to transfer power, control, communication, data, and/or any other type of electrical signals. One end of the electrical cable 1027 is connected to one or more components (e.g., light sources) disposed on and/or within the housing 1005 of the luminaire 1000. When the housing 1005 is mounted in its installed location (e.g., a ceiling), the entire electrical cable 1027 can be inaccessible. When the housing 1005 is removed from its installed location, the electrical cable 1027 can be accessible.

[0079] The junction box 1090 includes one or more walls 1091 to enclose one or more electrical components (e.g., a driver, the switch 1031). In this case, one of the walls of the junction box 1090 is removed to show the switch 1031 disposed within the cavity 1092 formed by the walls 1091 of the junction box 1090. An opposing end of the electrical cable 1027 is coupled to one or more of those electrical components disposed in the junction box 1090. In this way, the electrical cable 1027 electrically couples one or more electrical components in the junction box 1090 with one or more electrical components in or on the housing 1005. In this case, the switch 1031 is disposed within the junction box 1031. When the housing 1005 is mounted in its installed location (e.g., a ceiling), the junction box 1090 (and so also the switch 1031) can be inaccessible. When the housing 1005 is removed from its installed location, the junction box 1090 (and so also the switch 1031) can be accessible.

[0080] The switch 1031 of Figure 10 can be substantially the same as the switch 931 described above with respect to Figures 9A and 9B. For example, the switch 1031

Luminex v. Signify
Luminex Exhibit 1007
Page 182

can have a range of selections that are either continuous or discrete. As with the other switches described above, the switch 1031 is used to adjust the CCT output by one or more of the light sources of the luminaire 1000, and each selection of the switch 1031 corresponds to a CCT within a range of CCTs. As an alternative to the embodiment shown in Figure 10, rather than being disposed within the cavity 1092 of the junction box 1090, the switch 1031 can be disposed on a wall 1091 of the junction box 1090 or remotely from the junction box 1090 as well as remotely from the housing 1005 of the luminaire 1000.

[0081] As will be appreciated by those of ordinary skill, the textual and illustrated disclosure provided herein supports a wide range of embodiments and implementations. In some non-limiting example embodiments of the disclosure, a luminaire can comprise: a housing; a substrate disposed in the housing; a first plurality of light emitting diodes that are mounted to the substrate and that have a first color temperature; a second plurality of light emitting diodes that are mounted to the substrate and that have a second color temperature; and a plurality of manual switches that are disposed at the housing for permanently configuring the luminaire to: provide illumination of the first color temperature by enabling the first plurality of light emitting diodes; provide illumination of the second color temperature by enabling the second plurality of light emitting diodes; and provide illumination of a third color temperature that is between the first color temperature and the second color temperature by enabling the first plurality of light emitting diodes and the second plurality of light emitting diodes.

[0082] In some example embodiments of the luminaire, the housing can comprise an aperture that is configured for emitting area illumination, and the substrate is oriented to emit light through the aperture. In some example embodiments of the luminaire, the plurality of manual switches are mounted to the substrate. In some example embodiments of the luminaire, the plurality of manual switches are mounted in the housing. In some example embodiments of the luminaire, the plurality of manual switches are mounted to the housing. In some example embodiments of the luminaire, the plurality of manual switches comprise a dual inline pin (DIP) switch.

Luminex v. Signify
Luminex Exhibit 1007
Page 183

[0083] In some example embodiments of the luminaire, the plurality of manual switches provide two switch states, and each of the two switch states provides illumination of the third color temperature by enabling the first plurality of light emitting diodes and the second plurality of light emitting diodes. In some example embodiments of the luminaire, the housing is circular and comprises a lip configured for extending around an aperture in a ceiling. In some example embodiments of the luminaire, the housing comprises a wiring port disposed on a side of the housing. In some example embodiments of the luminaire, the housing comprises a light-emitting aperture in which the substrate is disposed.

[0084] In some example embodiments, the luminaire further comprises: an aperture disposed at a lower side of the housing; a lens disposed at the aperture for refracting light emitted by the first and second light emitting diodes; and a reflector that is disposed between the lens and the light emitting diodes and that is operative to reflect light between the first and second light emitting diodes and the lens. In some example embodiments of the luminaire, the housing is circular and comprises a lip configured for extending around an aperture in a ceiling. In some example embodiments of the luminaire, the housing comprises a wiring port disposed on a side of the housing. In some example embodiments of the luminaire, the housing forms a cavity associated with the aperture. In some example embodiments of the luminaire, the first and second light source are mounted to a substrate that is disposed at an end of the cavity. In some example embodiments, the luminaire further comprises a reflector that is disposed in the cavity between the lens and the first and second light sources, the reflector operative to reflect light between the first and second light sources and the lens.

[0085] Technology for providing a configurable a luminaire has been described. Many modifications and other embodiments of the disclosures set forth herein will come to mind to one skilled in the art to which these disclosures pertain having the benefit of the teachings presented in the foregoing descriptions and the associated drawings. Therefore, it is to be understood that the disclosures are not to be limited to the specific embodiments disclosed and that modifications and other embodiments are intended to be included within the scope of this application. Although specific terms are employed

Luminex v. Signify
Luminex Exhibit 1007
Page 184

herein, they are used in a generic and descriptive sense only and not for purposes of limitation.

Luminex v. Signify
Luminex Exhibit 1007
Page 185

PATENTS

IN THE UNITED STATES PATENT AND TRADEMARK OFFICE

In re Application of:	§	
	§	
John Edward Bowen et al.	§	
	§	Confirmation No.: 1994
	§	
Application Serial No: **16/014,394**	§	Group Art Unit: 2844
	§	
Filed: **June 21, 2018**	§	Examiner: Jimmy T. Vu
	§	
For: **CONFIGURABLE LIGHTING SYSTEM**	§	Atty. Docket No.: **13682.227254**
	§	(18-HLD-218 US)
	§	

RESPONSE TO NOTICE TO FILE CORRECTED APPLICATION PAPERS

Mail Stop Issue Fee
Commissioner for Patents
P.O. Box 1450
Alexandria, VA 22313-1450

Dear Sir:

In Response to the Notice to File Corrected Application Papers mailed November 2, 2018, (hereinafter, "Notice"), Applicants herein provide:

- **Amendments to the Specification,** which begins on page 2 of this paper;
- **Amendments to the Drawings,** which begins on page 4 of this paper; and
- **Remarks** which begin on page 5 of this paper.

I hereby certify that this correspondence is being communicated electronically via EFS-WEB to: Mail Stop Issue Fee, Commissioner for Patents, P.O. Box 1450, Alexandria, VA 22313-1450, on December 31, 2018.

/Sally Sexton/

Sally Sexton

DMSLIBRARY01\33638142.v1

UNITED STATES PATENT AND TRADEMARK OFFICE

UNITED STATES DEPARTMENT OF COMMERCE
United States Patent and Trademark Office
Address: COMMISSIONER FOR PATENTS
P.O. Box 1450
Alexandria, Virginia 22313-1450
www.uspto.gov

APPLICATION NO.	FILING DATE	FIRST NAMED INVENTOR	ATTORNEY DOCKET NO.	CONFIRMATION NO.
16/014,394	06/21/2018	John Edward Bowen	13682.227254	1994

91764 7590 11/02/2018
King & Spalding LLP (Eaton/Cooper)
ATTN: IP Docketing Department
1100 Louisiana Street, Suite 4000
Houston, TX 77002-5213

EXAMINER
VU, JIMMY T

ART UNIT	PAPER NUMBER
2844	

NOTIFICATION DATE	DELIVERY MODE
11/02/2018	ELECTRONIC

Please find below and/or attached an Office communication concerning this application or proceeding.

The time period for reply, if any, is set in the attached communication.

Notice of the Office communication was sent electronically on above-indicated "Notification Date" to the following e-mail address(es):

houpatentdocket@kslaw.com
nduby@kslaw.com

PTOL-90A (Rev. 04/07)

UNITED STATES PATENT AND TRADEMARK OFFICE

Commissioner for Patents
United States Patent and Trademark Office
P.O. Box 1450
Alexandria, VA 22313-1450
www.uspto.gov

Application No. : 16014394
Applicant : Bowen
Filing Date : 06/21/2018
Date Mailed : 11/02/2018

NOTICE TO FILE CORRECTED APPLICATION PAPERS

Notice of Allowance Mailed

This application has been accorded an Allowance Date and is being prepared for issuance. The application, however, is incomplete for the reasons below.

Applicant is given two (2) months from the mail date of this Notice within which to respond. This time period for reply is extendable under 37 CFR 1.136(a) for only TWO additional MONTHS.

The informalities requiring correction are indicated in the attachment(s). If the informality pertains to the abstract, specification (including claims) or drawings, the informality must be corrected with an amendment in compliance with 37 CFR 1.121 (or, if the application is a reissue application, 37 CFR 1.173). Such an amendment may be filed after payment of the issue fee if limited to correction of informalities noted herein. See Waiver of 37 CFR 1.312 for Documents Required by the Office of Patent Publication, 1280 Off. Gaz. Patent Office 918 (March 23, 2004). In addition, if the informality is not corrected until after payment of the issue fee, for purposes of 35 U.S.C. 154(b)(1)(iv), "all outstanding requirements" will be considered to have been satisfied when the informality has been corrected. A failure to respond within the above-identified time period will result in the application being ABANDONED.

See attachment(s).

A copy of this notice MUST be returned with the reply. Please address response to "Mail Stop Issue Fee, Commissioner for Patents, P.O. Box 1450, Alexandria, VA 22313-1450".

/Chris Harmon/
Publication Branch
Office of Data Management
(571) 272-4200

Application No. 16014394 **Drawings filed: 06/21/2018**

IDENTIFICATION OF DRAWING DEFICIENCIES

- [ ] There is a hole or the image thereof within the illustration. FIG(s)
- [ ] The illustration is penetrated or traversed by a solid or broken line that is not intended to be part of the drawing, such as a dark line caused by a flaw in the copying process. FIG(s)
- [ ] An ink stamp or the image thereof obscures part of the illustration. FIG(s)
- [ ] The drawing is marred by black smudges, obliterations, or fax/copier marks (for example, speckles or dots in a substantial portion of the drawing). FIG(s)
- [ ] Figure numbers are duplicated or missing. FIG(s)
- [ ] Drawing sheet or figure is missing. FIG(s)
- [ ] Numbers, letters, or reference characters in the drawing have been crossed out or are illegibly handwritten. FIG(s)
- [ ] The character of the lines, numbers, and letters is poor. FIG(s)
- [X] The drawing's background shows that the original drawing was made on graph paper or other paper with a pattern or decoration. FIG(s) 8-10
- [ ] The FIG. number label is placed in a location that causes the drawing to be read upside down. FIG(s)
- [ ] Data, a reference number, or part of the drawing is truncated or missing, or a lead line has no reference number. FIG(s)
- [ ] The drawing and/or the FIG. label contain(s) foreign language. FIG(s)
- [X] This utility application contains a photograph of a view that is capable of being illustrated as a line drawing. FIG(s) 6C
- [ ] A petition under 37 CFR 1.84(a)(2) to accept color drawings has been granted, but the brief description of the drawings in the specification does not contain (or has not been amended to contain) the paragraph required by 37 CFR 1.84(a)(2)(iii).
- [ ] This reissue application contains added and/or amended drawings that are not labeled as “New” or “Amended” or “Canceled” as required by 37 CFR 1.173(b)(3). FIG(s)
- [ ] This Design reissue application contains a drawing that is labeled as “Canceled” but is not surrounded by brackets, or a drawing that is surrounded by brackets but is not labeled as “Canceled.” See 37 CFR 1.173(b)(3). FIG(s)
- [ ] OTHER:
- [ ] COMMENTS:

Electronic Acknowledgement Receipt

EFS ID:	34727905
Application Number:	16014394
International Application Number:	
Confirmation Number:	1994
Title of Invention:	CONFIGURABLE LIGHTING SYSTEM
First Named Inventor/Applicant Name:	John Edward Bowen
Customer Number:	91764
Filer:	Timothy M. Smith
Filer Authorized By:	
Attorney Docket Number:	13682.227254
Receipt Date:	31-DEC-2018
Filing Date:	21-JUN-2018
Time Stamp:	17:54:54
Application Type:	Utility under 35 USC 111(a)

Payment information:

Submitted with Payment	no

File Listing:

Document Number	Document Description	File Name	File Size(Bytes)/ Message Digest	Multi Part /.zip	Pages (if appl.)
1		227245correct.pdf	155473 f32dfef1f08f23b5af7f9a3d3fc7839b5602440e	yes	6

	Multipart Description/PDF files in .zip description		
	Document Description	**Start**	**End**
	Applicant Response to Pre-Exam Formalities Notice	1	1
	Specification	2	3
	Drawings-only black and white line drawings	4	4
	Applicant Arguments/Remarks Made in an Amendment	5	6

Warnings:					
Information:					
2	Specification	clean.pdf	198962 5c055e3a57fdf7062473206818d9dced682459e8	no	23
Warnings:					
Information:					
3	Specification	mark.pdf	200064 a0b129a814dcc4296924df9a17890111aef43c4b	no	23
Warnings:					
Information:					
4	Drawings-only black and white line drawings	227254replace.pdf	501953 d097be7a18d566df4a93105d6860fe6f5238ee1f	no	5
Warnings:					
Information:					
5	Miscellaneous Incoming Letter	notice.pdf	125201 086f5cbd4da90c4c5992e09d58b5c28063174ce2	no	3
Warnings:					
Information:					
		Total Files Size (in bytes):	1181653		

This Acknowledgement Receipt evidences receipt on the noted date by the USPTO of the indicated documents, characterized by the applicant, and including page counts, where applicable. It serves as evidence of receipt similar to a Post Card, as described in MPEP 503.

New Applications Under 35 U.S.C. 111
If a new application is being filed and the application includes the necessary components for a filing date (see 37 CFR 1.53(b)-(d) and MPEP 506), a Filing Receipt (37 CFR 1.54) will be issued in due course and the date shown on this Acknowledgement Receipt will establish the filing date of the application.
National Stage of an International Application under 35 U.S.C. 371
If a timely submission to enter the national stage of an international application is compliant with the conditions of 35 U.S.C. 371 and other applicable requirements a Form PCT/DO/EO/903 indicating acceptance of the application as a national stage submission under 35 U.S.C. 371 will be issued in addition to the Filing Receipt, in due course.
New International Application Filed with the USPTO as a Receiving Office
If a new international application is being filed and the international application includes the necessary components for an international filing date (see PCT Article 11 and MPEP 1810), a Notification of the International Application Number and of the International Filing Date (Form PCT/RO/105) will be issued in due course, subject to prescriptions concerning national security, and the date shown on this Acknowledgement Receipt will establish the international filing date of the application.

DocCode – SCORE

SCORE Placeholder Sheet for IFW Content

Application Number: 16014394 Document Date: 12/31/2018

The presence of this form in the IFW record indicates that the following document type was received in electronic format on the date identified above. This content is stored in the SCORE database.

Since this was an electronic submission, there is no physical artifact folder, no artifact folder is recorded in PALM, and no paper documents or physical media exist. The TIFF images in the IFW record were created from the original documents that are stored in SCORE.

- Drawing

At the time of document entry (noted above):

- USPTO employees may access SCORE content via eDAN using the Supplemental Content tab, or via the SCORE web page.
- External customers may access SCORE content via PAIR using the Supplemental Content tab.

Form Revision Date: August 26, 2013

UNITED STATES PATENT AND TRADEMARK OFFICE

UNITED STATES DEPARTMENT OF COMMERCE
United States Patent and Trademark Office
Address: COMMISSIONER FOR PATENTS
P.O. Box 1450
Alexandria, Virginia 22313-1450
www.uspto.gov

APPLICATION NO.	FILING DATE	FIRST NAMED INVENTOR	ATTORNEY DOCKET NO.	CONFIRMATION NO.
16/014,394	06/21/2018	John Edward Bowen	13682.227254	1994

91764 7590 01/03/2019
King & Spalding LLP (Eaton/Cooper)
ATTN: IP Docketing Department
1100 Louisiana Street, Suite 4000
Houston, TX 77002-5213

EXAMINER
VU, JIMMY T

ART UNIT	PAPER NUMBER
2844	

NOTIFICATION DATE	DELIVERY MODE
01/03/2019	ELECTRONIC

Please find below and/or attached an Office communication concerning this application or proceeding.

The time period for reply, if any, is set in the attached communication.

Notice of the Office communication was sent electronically on above-indicated "Notification Date" to the following e-mail address(es):

houpatentdocket@kslaw.com
nduby@kslaw.com

PTOL-90A (Rev. 04/07)

UNITED STATES DEPARTMENT OF COMMERCE
U.S. Patent and Trademark Office
Address: COMMISSIONER FOR PATENTS
P.O. Box 1450
Alexandria, Virginia 22313-1450

APPLICATION NO./ CONTROL NO.	FILING DATE	FIRST NAMED INVENTOR/ PATENT IN REEXAMINATION	ATTORNEY DOCKET NO.
16/014,394	06/21/2018	Bowen et al.	13682.227254

		EXAMINER	
King & Spalding LLP (Eaton/Cooper) ATTN: IP Docketing Department **1100 Louisiana Street, Suite 4000** **Houston, TX 77002-5213**		JIMMY T VU	
		ART UNIT	**PAPER**
		2844	20181227

DATE MAILED: _____

Please find below and/or attached an Office communication concerning this application or proceeding.

Commissioner for Patents

The references cited in the Information Disclosure Statement (IDS) filed on 12/04/2018 have been considered by the examiner. /JV/

/JIMMY T VU/
Primary Examiner, Art Unit 2844

PTO-90C (Rev.04-03)

PTO/SB/08A (08-03)
Approved for use through 07/31/2006. OMB 0651-0031
U.S. Patent and Trademark Office: U.S. DEPARTMENT OF COMMERCE
Under the Paperwork Reduction Act of 1995 no persons are required to respond to a collection of information unless it contains a valid OMB control number.

Substitute for form 1449A/PTO

INFORMATION DISCLOSURE STATEMENT BY APPLICANT

(use as many sheets as necessary)

Sheet	1	of	1

Complete if Known	
Application Number	**16/014,394**
Filing Date	**06-21-2018**
First Named Inventor	**John Edward Bowen**
Group Art Unit	**2844**
Examiner Name	**Jimmy T. Vu**
Attorney Docket Number	**13682.227254**

U.S. PATENT DOCUMENTS

Examiner Initials *	Cite No. [1]	U.S. Patent Document Number	Kind Code (if known)	Name of Patentee or Applicant of Cited Document	Date of Publication of Cited Document MM-DD- YYYY	Pages Columns Lines Where Relevant Passages or Relevant Figures Appear
	1.	10,091,855		Van Winkle	10-02-2018	

FOREIGN PATENT DOCUMENTS

Examiner Initials *	Cite No. [1]	Foreign Patent Document Office[3]	Number	Kind Code[2] (if known)	Name of Patentee or Applicant of Cited Document	Date of Publication of Cited Document MM-DD- YYYY	Pages Columns Lines Where Relevant Passages or Relevant Figures Appear	T [6]

OTHER PRIOR ART – NON PATENT LITERATURE DOCUMENTS

Examiner Initials *	Cite No. [1]	Include name of the author (in CAPITAL LETTERS) title of the article (when appropriate) title of the item (book magazine journal serial symposium catalog etc.) date page(s) volume-issue number(s) publisher city and/or country where published.	T [6]

Examiner Signature	/JIMMY T VU/	Date Considered	12/27/2018

*EXAMINER: Initial if reference considered whether or not citation is in conformance with MPEP 609. Draw line through citation if not in conformance and not considered. Include copy of this form with next communication to applicant.

[1] Unique citation designation number. [2] See attached Kinds of U.S. Patent Documents. [3] Enter Office that issued the document by the two-letter code (WIPO Standard ST.3). [4] For Japanese patent documents the indication of the year of the reign of the Emperor must precede the serial number of the patent document. [5] Kind of document by the appropriate symbols as indicated on the document under WIPO Standard ST. 16 if possible. [6] Applicant is to place a check mark here if English language Translation is attached.

Burden Hour Statement: This form is estimated to take 2.0 hours to complete. Time will vary depending upon the needs of the individual case. Any comments on the amount of time you are required to complete this form should be sent to the Chief Information Officer U. S. Patent and Trademark Office Washington DC 20231. DO NOT SEND FEES OR COMPLETED FORMS TO THIS ADDRESS. SEND TO: Assistant Commissioner for Patents Washington DC 20231.
DMSLIBRARY01\33475054.v1

ALL REFERENCES CONSIDERED EXCEPT WHERE LINED THROUGH. /J.T.V/

IN THE UNITED STATES PATENT AND TRADEMARK OFFICE

In re Application of:	§	
Steven Walter Pyshos	§	Confirmation No.: **1994**
	§	
Application Serial No: **16/014,394**	§	Group Art Unit: **2844**
	§	
Filed: **06-21-2018**	§	Examiner: **VU, JIMMY T**
	§	
For: **Configurable Lighting System**	§	Attorney Docket: **13682.227254**

INFORMATION DISCLOSURE STATEMENT

Commissioner for Patents
P.O. Box 1450
Alexandria, VA 22313-1450

Sir:

This Information Disclosure Statement is filed in accordance with 37 C.F.R. §§1.56, 1.97 and 1.98. The items listed on Form SB/08B are made of record to assist the Patent and Trademark Office in its examination of this application. The Examiner is respectfully requested to fully consider the items and to independently ascertain their teaching.

1. ☐ For each of the following items listed on the enclosed copy of Form SB/08B that is not in the English language, an English language translation of that item or a portion thereof or a concise explanation of the relevance of that item is enclosed:

2. ☐ For each of the following items listed on the enclosed copy of Form SB/08B that is not in the English language, a concise explanation of the relevance of that item is provided:

3. ☐ Any copy of the items listed on the enclosed copy of Form SB/08B that is not enclosed with this Information Disclosure Statement was previously cited by or submitted to the Patent and Trademark Office in application Serial No.

4. ☐ No fee is due under 37 C.F.R. §1.17(p) for this Information Disclosure Statement since it is being filed in compliance with:

   ☐ 37 C.F.R. §1.97(b)(1), within three months of the filing date of a national application other than a CPA; or

   ☐ 37 C.F.R. §1.97(b)(2), within three months of the date of entry into the national stage as set forth in §1.491 in an international application; or

☐ 37 C.F.R. §1.97(b)(3), before the mailing date of a first Office action on the merits; or

☐ 37 C.F.R. §1.97(b)(4) before the mailing date of a first office action after the filing of an RCE under §1.114

5. ☐ No fee is due under 37 C.F.R. §1.17(p) for this Supplemental Information Disclosure Statement since it is being filed in compliance with 37 C.F.R. §1.97(c), after the period specified in paragraph 4 above but before the mailing date of a final action or a Notice of Allowance (where there has been no prior final action), and is accompanied by one of the certifications pursuant to 37 C.F.R. §1.97(e) set forth in paragraph 9 below.

6. ☐ A fee is due under 37 C.F.R. §1.17(p) for this Supplemental Information Disclosure Statement since it is being filed in compliance with 37 C.F.R. §1.97(c), after the period specified in paragraph 4 above but before the mailing date of a final action or a notice of allowance (where there has been no prior final action):

☐ Payment of $240.00 is being made with a credit card via EFS-Web.

☐ Charge the fee to Deposit Account No.11-0980, Order No._____.

7. ☒ A fee is due under 37 C.F.R. §1.17(p) for this Supplemental Information Disclosure Statement since it is being filed in compliance with 37 C.F.R. §1.97(d), after the mailing date of a final action or a notice of allowance, whichever comes first, but before payment of the issue fee, and is accompanied by:

a. one of the certifications pursuant to 37 C.F.R. §1.97(e) set forth in paragraph 9 below; and

b. the fee due under 37 C.F.R. §1.17(p) which is paid as set forth in paragraph 11 below.

8. ☐ This Supplemental Information Disclosure Statement is being filed in compliance with:

a. ☐ 37 C.F.R. §1.313(b)(3) or §1.313(c)(1), after the issue fee has been paid and information cited in this Supplemental Information Disclosure Statement may render at least one claim unpatentable and is accompanied by the attached Petition To Withdraw Application From Issue and fee pursuant to 37 C.F.R. §1.17(h);

b. ☐ 37 C.F.R. §1.313(c)(2) or §1.313(c)(3), after the issue fee has been paid and information cited in this Supplemental Information Disclosure Statement is to be considered in a Request for Continued Examination (RCE) or a Continuation application upon abandonment of the instant application and is accompanied by the attached Petition To Withdraw Application From Issue and fee pursuant to 37 C.F.R. §1.17(h).

c. ☐ The fee due under 37 C.F.R. §§1.17(h) is paid as set forth in paragraph 11 below.

9. ☐ I hereby certify that each item of information contained in this Supplemental Information Disclosure Statement was first cited in a communication from a foreign patent office in a counterpart foreign application not more than three months prior to the filing of this Supplemental Information Disclosure Statement.

☒ I hereby certify that no item of information in the Supplemental Information Disclosure Statement filed herewith was cited in a communication from a foreign patent office in a counterpart foreign application or, to my knowledge after making reasonable inquiry, was known to any individual designated in §1.56(c) more than three months prior to the filing of this Supplemental Information Disclosure Statement.

10. ☐ This document is accompanied by ☐ a Search Report ☐ Communication which was cited in a corresponding ☐ PCT or ☐ Foreign counterpart application.

11. ☒ Charge any fees due under 37 C.F.R. §§1.17(h) and 1.17(p) to Deposit Account No.-110980.

☒ The Commissioner is hereby authorized to charge any additional fees which may be required for this Information Disclosure Statement, or credit any overpayment to Deposit Account No. 11-0980.

Respectfully submitted,
KING & SPALDING LLP

/Robert T. Neufeld/
Robert T. Neufeld
Reg. No. 48394

Correspondence Address:
King & Spalding LLP
1180 Peachtree Street
Atlanta, GA 30309
404-572-4600 Telephone
404-572-5100 Facsimile

PTO/SB/08A (08-03)
Approved for use through 07/31/2006. OMB 0651-0031
U.S. Patent and Trademark Office: U.S. DEPARTMENT OF COMMERCE
Under the Paperwork Reduction Act of 1995 no persons are required to respond to a collection of information unless it contains a valid OMB control number.

Substitute for form 1449A/PTO

INFORMATION DISCLOSURE STATEMENT BY APPLICANT

(use as many sheets as necessary)

Sheet	1	of	1

Complete if Known	
Application Number	**16/014,394**
Filing Date	**06-21-2018**
First Named Inventor	**John Edward Bowen**
Group Art Unit	**2844**
Examiner Name	**Jimmy T. Vu**
Attorney Docket Number	**13682.227254**

U.S. PATENT DOCUMENTS

Examiner Initials *	Cite No. [1]	U.S. Patent Document Number	Kind Code (if known)	Name of Patentee or Applicant of Cited Document	Date of Publication of Cited Document MM-DD- YYYY	Pages Columns Lines Where Relevant Passages or Relevant Figures Appear
	1.	20100237798		Wolf	09-23-2010	

FOREIGN PATENT DOCUMENTS

Examiner Initials *	Cite No. [1]	Foreign Patent Document Office[3]	Number	Kind Code[2] (if known)	Name of Patentee or Applicant of Cited Document	Date of Publication of Cited Document MM-DD- YYYY	Pages Columns Lines Where Relevant Passages or Relevant Figures Appear	T [6]

OTHER PRIOR ART – NON PATENT LITERATURE DOCUMENTS

Examiner Initials *	Cite No. [1]	Include name of the author (in CAPITAL LETTERS) title of the article (when appropriate) title of the item (book magazine journal serial symposium catalog etc.) date page(s) volume-issue number(s) publisher city and/or country where published.	T [6]

Examiner Signature		Date Considered	

*EXAMINER: Initial if reference considered whether or not citation is in conformance with MPEP 609. Draw line through citation if not in conformance and not considered. Include copy of this form with next communication to applicant.

[1] Unique citation designation number. [2] See attached Kinds of U.S. Patent Documents. [3] Enter Office that issued the document by the two-letter code (WIPO Standard ST.3). [4] For Japanese patent documents the indication of the year of the reign of the Emperor must precede the serial number of the patent document. [5] Kind of document by the appropriate symbols as indicated on the document under WIPO Standard ST. 16 if possible. [6] Applicant is to place a check mark here if English language Translation is attached.

Burden Hour Statement: This form is estimated to take 2.0 hours to complete. Time will vary depending upon the needs of the individual case. Any comments on the amount of time you are required to complete this form should be sent to the Chief Information Officer U. S. Patent and Trademark Office Washington DC 20231. DO NOT SEND FEES OR COMPLETED FORMS TO THIS ADDRESS. SEND TO: Assistant Commissioner for Patents Washington DC 20231.
DMSLIBRARY01\33475054.v2

Electronic Patent Application Fee Transmittal

Application Number:	16014394
Filing Date:	21-Jun-2018
Title of Invention:	CONFIGURABLE LIGHTING SYSTEM
First Named Inventor/Applicant Name:	John Edward Bowen
Filer:	Robert Timothy Neufeld
Attorney Docket Number:	13682.227254

Filed as Large Entity

Filing Fees for Utility under 35 USC 111(a)

Description	Fee Code	Quantity	Amount	Sub-Total in USD($)
Basic Filing:				
Pages:				
Claims:				
Miscellaneous-Filing:				
Petition:				
Patent-Appeals-and-Interference:				
Post-Allowance-and-Post-Issuance:				
Extension-of-Time:				

Description	Fee Code	Quantity	Amount	Sub-Total in USD($)
Miscellaneous:				
SUBMISSION- INFORMATION DISCLOSURE STMT	1806	1	240	240
		Total in USD ($)		**240**

Electronic Acknowledgement Receipt

EFS ID:	34797836
Application Number:	16014394
International Application Number:	
Confirmation Number:	1994
Title of Invention:	CONFIGURABLE LIGHTING SYSTEM
First Named Inventor/Applicant Name:	John Edward Bowen
Customer Number:	91764
Filer:	Robert Timothy Neufeld
Filer Authorized By:	
Attorney Docket Number:	13682.227254
Receipt Date:	08-JAN-2019
Filing Date:	21-JUN-2018
Time Stamp:	19:57:47
Application Type:	Utility under 35 USC 111(a)

Payment information:

Submitted with Payment	yes
Payment Type	CARD
Payment was successfully received in RAM	$240
RAM confirmation Number	010919INTEFSW19580800
Deposit Account	
Authorized User	
The Director of the USPTO is hereby authorized to charge indicated fees and credit any overpayment as follows:	

File Listing:

Document Number	Document Description	File Name	File Size(Bytes)/ Message Digest	Multi Part /.zip	Pages (if appl.)
1	Transmittal Letter	227254trans.pdf	102700 9546388ba821a769804c485450a4390cc0e37f70	no	3
Warnings:					
Information:					
2	Information Disclosure Statement (IDS) Form (SB08)	227254ids.pdf	142214 6b551fdfd1a7cd6706e77be4306d97a760261ad3	no	1
Warnings:					
Information:					
This is not an USPTO supplied IDS fillable form					
3	Fee Worksheet (SB06)	fee-info.pdf	30666 fe9cf29622531d8640ac917d28c9735a4088e023	no	2
Warnings:					
Information:					
			Total Files Size (in bytes):	275580	

This Acknowledgement Receipt evidences receipt on the noted date by the USPTO of the indicated documents, characterized by the applicant, and including page counts, where applicable. It serves as evidence of receipt similar to a Post Card, as described in MPEP 503.

New Applications Under 35 U.S.C. 111
If a new application is being filed and the application includes the necessary components for a filing date (see 37 CFR 1.53(b)-(d) and MPEP 506), a Filing Receipt (37 CFR 1.54) will be issued in due course and the date shown on this Acknowledgement Receipt will establish the filing date of the application.
National Stage of an International Application under 35 U.S.C. 371
If a timely submission to enter the national stage of an international application is compliant with the conditions of 35 U.S.C. 371 and other applicable requirements a Form PCT/DO/EO/903 indicating acceptance of the application as a national stage submission under 35 U.S.C. 371 will be issued in addition to the Filing Receipt, in due course.
New International Application Filed with the USPTO as a Receiving Office
If a new international application is being filed and the international application includes the necessary components for an international filing date (see PCT Article 11 and MPEP 1810), a Notification of the International Application Number and of the International Filing Date (Form PCT/RO/105) will be issued in due course, subject to prescriptions concerning national security, and the date shown on this Acknowledgement Receipt will establish the international filing date of the application.

144DPM

********** Cover Page **********

Delivery Information

Time of Request: Wednesday, January 16, 2019 21:48:59
Client ID/Project Name: 99997-000000-009206 xxxx
Number of Lines: 141
Job Number: 2826:659998779

Research Information

Source: CN
Search Terms: (pub-id(CN201844227U))

1 of 1 DOCUMENT

CN201844227U 2011-05-25 Indoor energy-saving lamp with controllable color temperature of light-emitting diode (en)

English Abstract:

The utility model discloses an indoor energy-saving lamp with controllable color temperature of a light-emitting diode, which comprises a glass shell, a color temperature selecting switch, a controller, a connector, a radiator and an LED (light-emitting diode) light source, wherein the glass shell is positioned on the radiator, the radiator is connected with the connector by a connecting piece, the color temperature selecting switch is embedded in the radiator, the controller is arranged in the radiator, an aluminum-based board is arranged on the top of the radiator, and a plurality of multi-color-temperature high-lighting-effect LED chips are arranged on the aluminum-based board. The indoor energy-saving lamp has the following advantages: 1. The radiator is used for dissipating heat generated in packaging of a LED bulb by the aluminum-based board, thus prolonging the service life of the whole LED bulb; 2. The controlled is used for controlling and guaranteeing the whole circuit to run normally, thus being capable of guaranteeing the working stability and safety of the energy-saving lamp; and 3. The surface of the glass shell is uneven, thus being capable of preventing glare effectively.

Standardized Assignees: TIANJIN STAR SEA ELECTRONICS TECHNOLOGY

Original Assignees: TIANJIN STAR SEA ELECTRONICS TECHNOLOGY CO LTD, 301800 天津市宝坻经济开发区宝强路2号

Current Assignees: TIANJIN STAR SEA ELECTRONICS TECHNOLOGY CO LTD

Inventors: BAOXING JIA;
TAO WU;
LIZHENG FANG

Attorneys: 天津盛理知识产权代理有限公司 12209 (董一宁)

Application Number: CN201020281696

Luminex v. Signify
Luminex Exhibit 1007
Page 205

Application/Filing Date: 2010-08-04

Priority Number and Date: CN201020281696 2010-08-04

Classifications:
CPC: Y02B20/40 (2013-01-01; A 2013-01-01; B, H, EP)
IPC[8]: F21K9/232 (2016-01-01; A, , I, 2017-02-09; R, H, CN)
IPC[8]: F21K9/238 (2016-01-01; A, , I, 2017-02-09; R, H, CN)
IPC[8]: F21V15/02 (2006-01-01; A, L, I, 2011-12-09; B, H, CN)
IPC[8]: F21V17/00 (2006-01-01; A, L, I, 2011-12-09; B, H, CN)
IPC[8]: F21V19/00 (2006-01-01; A, L, I, 2011-12-09; B, H, CN)
IPC[8]: F21V23/04 (2006-01-01; A, L, I, 2011-12-09; B, H, CN)
IPC[8]: F21V29/508 (2015-01-01; A, , I, 2015-12-08; R, H, CN)
IPC[8]: F21V29/71 (2015-01-01; A, , I, 2015-12-08; R, H, CN)
IPC[8]: F21Y115/10 (2016-01-01; A, , N, 2017-02-09; R, H, CN)
IPC[8]: H05B37/02 (2006-01-01; A, L, I, 2011-12-09; B, H, CN)
ICO: Y02B20/40

Patent References Cited-Forward:

Publication Number
CN102635795A

English Description:

Technical Field:

The utility model relates to a lighting equipment, in particular to a light-emitting diode a controllable color temperature indoor energy-saving lamp.

Background Art:

Within the range in different areas, because of the geographical differences in the region, climate differences, so that the different regions of different illumination effect there is an enormous difference between the comfort level. But also in respect of the same area, because the season, climate change, the same kind of color temperature lamp shown there will be a great comfort differences, this kind of difference in the performance of the indoor illumination which is particularly outstanding. The traditional lamps and lanterns by the technical and technological constraints, the different groups is very difficult to satisfy the requirements of the light color temperature.

Content of the invention:

The purpose of the utility model is to overcome the above-mentioned deficiencies in the prior art, light-emitting diode to provide a controllable color temperature indoor energy-saving lamp, the energy-saving and energy-saving environmental protection, controllable color temperature, and low consumption and high efficiency.

The idea, the technical solution of the utility model is:a kind of light-emitting diode a controllable color temperature indoor energy-saving lamp, characterized in that the glass shell, color temperature selection switch, the controller, interface, the radiator and the LED light source; the glass casing is located on the top of the radiator, the radiator is connected with the interface through the connecting piece, color temperature selection switch is embedded in the top of the radiator, the heat dissipation body placed inside the controller, the top of the body of

Luminex v. Signify
Luminex Exhibit 1007
Page 206

the aluminum substrate is heat, the aluminum base plate is placed on the high light efficiency of the plurality of multi-color LED chip.

The above-mentioned interface adopts a spiral type, in-line, extrusion.

The above-mentioned plurality of multi-color high-light efficiency of the LED chip is divided into two links by the color temperature selection switch to control, respectively, a warm white strip is formed by the LED lamp which are connected in series, the strip is made from cold white LED lamps are connected in series or in parallel.

The above-mentioned glass a concavo-convex surface of the outer shell.

The above-mentioned control device, the master control circuit comprises a rectifying and filtering circuit, power management chip, transformer and switch triode, wherein, in the front end of the output end of the rectifier and filter circuit is connected with the primary of the transformer, the output end of the primary coil of the transformer is connected with the collecting electrode of the switch transistor, switch with the base electrode of the triode power management chip is connected with the input port, the output signal of the power management chip which generates high-frequency pulse the alternating current, and the transformer secondary rectifying filtering circuit to output a stable direct current voltage.

The utility model has the following advantages and effects:

1, through the heating body LED lamp bulb for the aluminum base plate to disperse the heat emitted from the package, the entire LED so as to prolong the service life of ball bubble lamp.

2, through the controller to control and ensure the normal operation of the whole circuit, thereby ensuring the stability of the work of the energy-saving lamp and safety.

3, the surface of the glass shell is rugged, can effectively prevent glare.

Description of drawings:

Figure 1 is the outside drawing of the utility model.

Figure 2 is the internal structure of the utility model schematic diagram.

Figure 3 is Figure 2 A-A section of the Figure.

Figure 4 is an electrical schematic diagram of the controller.

Mode of execution:

As shown in Figure 1, 2, 3 shown by:a light emitting diode controlled color temperature indoor energy-saving lamp, comprising a glass shell 1, color temperature selection switch 2, controller 3, interface 4, aluminum radiator 5 and LED light source 6 composition. Interface 4 controllable color temperature located in the bottom of the LED energy-saving lamp, can choose the screw-type, in-line, multi-way extrusion, and the like, and is connected with the electrode of the external interface is connected. Aluminum radiator 5 is made of aluminum die casting made of metal materials, the plastic connecting piece 7 and the interface 4 is connected with the, color temperature selection switch 2 embedded in the aluminum radiator 5 the top of the, aluminum radiator 5 placed inside the controller 3, the aluminum radiator 5 is placed at the top of the aluminum base plate 8, six different color temperature of the plurality of high light efficiency LED chip (light emitting diode) in aluminum base plate 8 above, the aluminum base plate 8 fast of heat conduction, it has very good heat dissipation effect. The above-mentioned six multi-color high-light efficiency of the LED chip is divided into two links by the color temperature selection

Luminex v. Signify
Luminex Exhibit 1007
Page 207

switch to control, respectively, a warm white strip is formed by the LED lamp which are connected in series, the strip is made from cold white LED lamps are connected in series or in parallel.

The above-mentioned aluminum radiator 5 is used to disperse the LED aluminum base plate lamp bulb 8 the heat emitted, thereby ensuring that the whole LED ball bulb the service life of the lamp. Controller 3 and is used to control the normal operation of the whole circuit can be guaranteed. The glass casing 1 is located in an aluminum radiator 5 the top, used for protecting the light-emitting device and to radiate the visible light, the glass casing 1 when the processing of the mold, the glass shell 1 by a plastic mould high speed mill processing, the glass shell 1 becomes smooth surface of the concave is not smooth with, can effectively prevent glare. Wire 9 is located on the inside of the lamp, is used for the various devices together in an orderly manner, LED ball bubble lamp is ensured after the power supply is switched on, can be normally working.

As shown in Figure 4, the controller of the utility model the master control circuit of the different color LED through the selective on-off, to obtain the different color temperature value, the power management chip to realize a constant current control circuit, generating a corresponding current value thereof especially suitable for driving LED lamp. Main control circuit of this invention is designed around the power management chip, its through the front-end rectifier and filter, to the transformer primary, three-pole tube through the switch, power management chip, the transformation in the switch is turned on, generating a high-frequency pulse AC, through the transformer secondary rectifying filtering circuit to output a stable direct current voltage.

Number of Claims: 5

ENGLISH CLAIMS:

1. A light-emitting diode a controllable color temperature indoor energy-saving lamp, characterized in that the glass shell, color temperature selection switch, the controller, interface, the radiator and the LED light source; the glass casing is located on the top of the radiator, the radiator is connected with the interface through the connecting piece, color temperature selection switch is embedded in the top of the radiator, the heat dissipation body placed inside the controller, the top of the body of the aluminum substrate is heat, the aluminum base plate is placed on the high light efficiency of the plurality of multi-color LED chip.

2. A light-emitting diode a controllable color temperature indoor energy-saving lamp according to Claim 1, characterized in that the above-mentioned interface adopts a spiral type, in-line, extrusion.

3. A light-emitting diode a controllable color temperature indoor energy-saving lamp according to Claim 1, characterized in that the above-mentioned plurality of multi-color high-light efficiency of the LED chip is divided into two links by the color temperature selection switch to control, respectively, a warm white strip is formed by the LED lamp which are connected in series, the strip is made from cold white LED lamps are connected in series or in parallel.

4. A light-emitting diode a controllable color temperature indoor energy-saving lamp according to Claim 1, characterized in that the above-mentioned glass a concavo-convex surface of the outer shell.

5. A light-emitting diode a controllable color temperature indoor energy-saving lamp according to Claim 1, characterized in that the above-mentioned control device, the master control circuit comprises a rectifying and filtering circuit, power management chip, transformer and switch triode, wherein, the front end of the output end of the rectifier and filter circuit is connected with the primary of the transformer, the output end of the primary coil of the

Luminex v. Signify
Luminex Exhibit 1007
Page 208

transformer is connected with the collecting electrode of the switch transistor, switch with the base electrode of the triode power management chip is connected with the input port, the output signal of the power management chip which generates high-frequency pulse the alternating current, and the transformer secondary rectifying filtering circuit to output a stable direct current voltage.

144DPM

********** Print Completed **********

Time of Request: Wednesday, January 16, 2019 21:48:59

Print Number: 2826:659998779
Number of Lines: 141
Number of Pages: 1

Luminex v. Signify
Luminex Exhibit 1007
Page 209

PTO/SB/08A (08-03)
Approved for use through 07/31/2006. OMB 0651-0031
U.S. Patent and Trademark Office: U.S. DEPARTMENT OF COMMERCE
Under the Paperwork Reduction Act of 1995 no persons are required to respond to a collection of information unless it contains a valid OMB control number.

Substitute for form 1449A/PTO

INFORMATION DISCLOSURE STATEMENT BY APPLICANT

(use as many sheets as necessary)

Sheet	1	of	1

Complete if Known	
Application Number	**16/014394**
Filing Date	**06-21-2018**
First Named Inventor	**John Edward Bowen**
Group Art Unit	**2844**
Examiner Name	**Jimmy T. Vu**
Attorney Docket Number	**13682.227254**

U.S. PATENT DOCUMENTS

Examiner Initials *	Cite No. [1]	U.S. Patent Document Number	Kind Code (if known)	Name of Patentee or Applicant of Cited Document	Date of Publication of Cited Document MM-DD- YYYY	Pages Columns Lines Where Relevant Passages or Relevant Figures Appear
	1.	2013/0114241		Antony Paul Van de Ven. et al.	05-09-2013	
	2.	8947013		Sehat Sutardja et al.	02-03-2015	
	3.	9144129		David Munday et al.	09-22-2015	
	4.	9072148		Kenichiro Tanaka et al.	06-30-2015	
	5.	2008/0060917		Chen Chia-Li et al.	03-13-2008	
	6.	6149283		Kathryn M. Conway et al.	11-21-2000	
	7.	6127783		Michael D. Pashley et al.	10-03-2000	

FOREIGN PATENT DOCUMENTS

Examiner Initials *	Cite No. [1]	Foreign Patent Document Office[3]	Number	Kind Code[2] (if known)	Name of Patentee or Applicant of Cited Document	Date of Publication of Cited Document MM-DD- YYYY	Pages Columns Lines Where Relevant Passages or Relevant Figures Appear	T [6]
	8.	CN	201844227		Tianjin Star Sea Electronics Technology Co LTD.	05-25-2011		

OTHER PRIOR ART – NON PATENT LITERATURE DOCUMENTS

Examiner Initials *	Cite No. [1]	Include name of the author (in CAPITAL LETTERS) title of the article (when appropriate) title of the item (book magazine journal serial symposium catalog etc.) date page(s) volume-issue number(s) publisher city and/or country where published.	T [6]
	9	International Search Report for PCT/US2018/047718, mailed November 29, 2018.	

Examiner Signature		Date Considered	

*EXAMINER: Initial if reference considered whether or not citation is in conformance with MPEP 609. Draw line through citation if not in conformance and not considered. Include copy of this form with next communication to applicant.

[1] Unique citation designation number. [2] See attached Kinds of U.S. Patent Documents. [3] Enter Office that issued the document by the two-letter code (WIPO Standard ST.3). [4] For Japanese patent documents the indication of the year of the reign of the Emperor must precede the serial number of the patent document. [5] Kind of document by the appropriate symbols as indicated on the document under WIPO Standard ST. 16 if possible. [6] Applicant is to place a check mark here if English language Translation is attached.

Burden Hour Statement: This form is estimated to take 2.0 hours to complete. Time will vary depending upon the needs of the individual case. Any comments on the amount of time you are required to complete this form should be sent to the Chief Information Officer U. S. Patent and Trademark Office Washington DC 20231. DO NOT SEND FEES OR COMPLETED FORMS TO THIS ADDRESS. SEND TO: Assistant Commissioner for Patents Washington DC 20231.
DMSLIBRARY01\33726605.v1

(19)中华人民共和国国家知识产权局

(12)实用新型专利

(10)授权公告号 CN 201844227 U
(45)授权公告日 2011.05.25

(21)申请号 201020281696.7

(22)申请日 2010.08.04

(73)专利权人 天津星洋电子科技有限公司
地址 301800 天津市宝坻经济开发区宝强路2号

(72)发明人 贾宝兴 武弢 房力争

(74)专利代理机构 天津盛理知识产权代理有限公司 12209
代理人 董一宁

(51)Int.Cl.
F21S 2/00(2006.01)
F21V 17/00(2006.01)
F21V 19/00(2006.01)
F21V 23/04(2006.01)
F21V 29/00(2006.01)
F21V 15/02(2006.01)
H05B 37/02(2006.01)
F21Y 101/02(2006.01)

(ESM)同样的发明创造已同日申请发明专利

权利要求书 1 页 说明书 2 页 附图 2 页

(54)实用新型名称

一种发光二极管可控色温室内节能灯

(57)摘要

一种发光二极管可控色温室内节能灯，由玻璃外壳、色温选择开关、控制器、接口、散热体和LED光源组成；玻璃外壳位于散热体的上面，散热体通过连接件与接口连接，色温选择开关嵌入于散热体的上面，散热体内部放置控制器、散热体顶部放置铝基板，铝基板上放置多颗多色温的高光效LED芯片。本实用新型的优点是：1、通过散热体用来驱散LED灯珠铝基板封装所散发出的热量，从而延长了整个LED球泡灯的使用寿命。2、通过控制器来控制和保证整个电路的正常运行，从而可保证节能灯工作的稳定性和安全性。3、玻璃外壳的表面凹凸不平，可以有效的防止眩光。

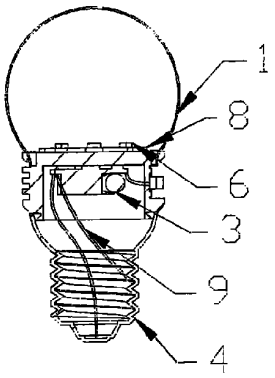

CN 201844227 U

1. 一种发光二极管可控色温室内节能灯，其特征在于：由玻璃外壳、色温选择开关、控制器、接口、散热体和 LED 光源组成；玻璃外壳位于散热体的上面，散热体通过连接件与接口连接，色温选择开关嵌入于散热体的上面，散热体内部放置控制器、散热体顶部放置铝基板，铝基板上放置多颗多色温的高光效 LED 芯片。

2. 根据权利要求 1 所述的一种发光二极管可控色温室内节能灯，其特征在于：上述接口采用螺旋式、直插式、挤压式。

3. 根据权利要求 1 所述的一种发光二极管可控色温室内节能灯，其特征在于：上述多颗多色温的高光效 LED 芯片分为两条链路分别由色温选择开关控制，一条是由暖白色 LED 灯串联组成，一条是由冷白色 LED 灯串联或并联组成。

4. 根据权利要求 1 所述的一种发光二极管可控色温室内节能灯，其特征在于：上述玻璃外壳的表面有凹凸。

5. 根据权利要求 1 所述的一种发光二极管可控色温室内节能灯，其特征在于：上述控制器的主控电路包括整流滤波电路、电源管理芯片、变压器和开关三极管，其中，前端整流滤波电路的输出端与变压器的初级连接，变压器初级的输出端与开关三极管的集电极连接、开关三极管的基极与电源管理芯片的输入端口连接、电源管理芯片的输出信号经过变压产生高频脉冲交流，并经变压器次级整流滤波后输出稳定的直流电压。

Luminex v. Signify
Luminex Exhibit 1007
Page 212

一种发光二极管可控色温室内节能灯

技术领域：

[0001] 本实用新型属于一种照明器材，特别涉及一种发光二极管可控色温室内节能灯。

背景技术：

[0002] 在不同地区范围内，由于各地区所处的地域差异、气候差异，使得各地区人群对不同照明效果表现出来的舒适度有很大差别。而且就同一地区而言，因为季节、气候的变化，对同一种色温灯具所表现出来的舒适度也会有很大差异，这种差异在室内照明上表现的尤为突出。而传统灯具受技术和工艺上的限制，很难满足不同人群对灯光色温的要求。

发明内容：

[0003] 本实用新型的目的就在于克服上述现有技术中存在的不足，而提供一种发光二极管可控色温室内节能灯，该节能灯节能环保、色温可控，并且低耗高效。

[0004] 如上构思，本实用新型的技术方案是：一种发光二极管可控色温室内节能灯，其特征在于：由玻璃外壳、色温选择开关、控制器、接口、散热体和 LED 光源组成；玻璃外壳位于散热体的上面，散热体通过连接件与接口连接，色温选择开关嵌入于散热体的上面，散热体内部放置控制器、散热体顶部放置铝基板，铝基板上放置多颗多色温的高光效 LED 芯片。

[0005] 上述接口采用螺旋式、直插式、挤压式。

[0006] 上述多颗多色温的高光效 LED 芯片分为两条链路分别由色温选择开关控制，一条是由暖白色 LED 灯串联组成，一条是由冷白色 LED 灯串联或并联组成。

[0007] 上述玻璃外壳的表面有凹凸。

[0008] 上述控制器的主控电路包括整流滤波电路、电源管理芯片、变压器和开关三极管，其中，前端整流滤波电路的输出端与变压器的初级连接，变压器初级的输出端与开关三极管的集电极连接、开关三极管的基极与电源管理芯片的输入端口连接、电源管理芯片的输出信号经过变压产生高频脉冲交流，并经变压器次级整流滤波后输出稳定的直流电压。

[0009] 本实用新型具有如下的优点和积极效果：

[0010] 1、通过散热体用来驱散 LED 灯珠铝基板封装所散发出的热量，从而延长了整个 LED 球泡灯的使用寿命。

[0011] 2、通过控制器来控制和保证整个电路的正常运行，从而可保证节能灯工作的稳定性和安全性。

[0012] 3、玻璃外壳的表面凹凸不平，可以有效的防止眩光。

附图说明：

[0013] 图 1 是本实用新型的外观图。

[0014] 图 2 是本实用新型的内部结构示意图。

[0015] 图 3 是图 2 的 A-A 剖面图。

[0016] 图 4 是控制器的电原理图。

Luminex v. Signify
Luminex Exhibit 1007
Page 213

具体实施方式：

[0017] 如图1、2、3所示：一种发光二极管可控色温室内节能灯，由玻璃外壳1、色温选择开关2、控制器3、接口4、铝制散热体5和LED光源6组成。接口4位于可控色温LED节能灯的最底部，可选用螺旋式、直插式、挤压式等多种方式，用来与外部接口中的电极相连接通电。铝制散热体5采用金属材质铝压铸制成，通过塑料连接件7与接口4连接，色温选择开关2嵌入于铝制散热体5的上面，铝制散热体5内部放置控制器3、铝制散热体5顶部放置铝基板8，六颗不同色温的多颗高光效LED芯片（发光二极管）位于铝基板8的上面，铝基板8热传导快，具有很好的散热效果。上述六颗多色温的高光效LED芯片分为两条链路分别由色温选择开关控制，一条是由暖白色LED灯串联组成，一条是由冷白色LED灯串联或并联组成。

[0018] 上述铝制散热体5用来驱散LED灯珠铝基板8所散发出的热量，保证整个LED球泡灯的使用寿命。控制器3用来控制和保证整个电路的正常运行。玻璃外壳1位于铝制散热体5的上面，用来保护发光装置并把发出的可见光散发出去，玻璃外壳1的模具在加工的时候，对玻璃外壳1的塑料模具采用高速铣加工，使玻璃外壳1光滑的表面变得不光滑有凹凸感，可以有效的防止眩光。导线9位于灯具的里面，用来把各种器件有序的连接起来，保证LED球泡灯接通电源后，可以正常的工作。

[0019] 如图4所示，本实用新型控制器的主控电路通过对不同色温的LED选择性通断，得到不同的色温值，采用电源管理芯片实现的恒流控制电路，其产生相应的电流值特别适用于驱动LED灯。本发明主控电路围绕电源管理芯片进行设计，其通过前端整流滤波、送往变压器初级，经开关三极管、电源管理芯片、变压等的开关导通，产生高频脉冲交流，经变压器次级整流滤波后输出稳定的直流电压。

Luminex v. Signify
Luminex Exhibit 1007
Page 214

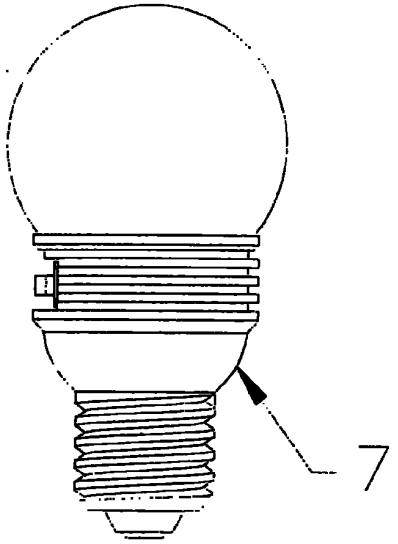

图 1

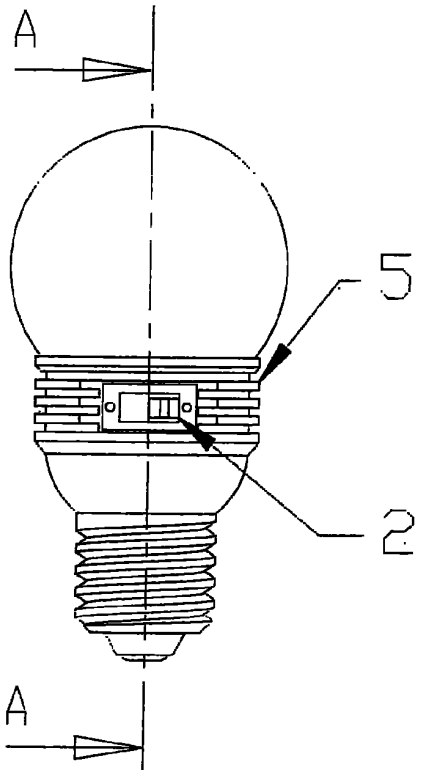

图 2

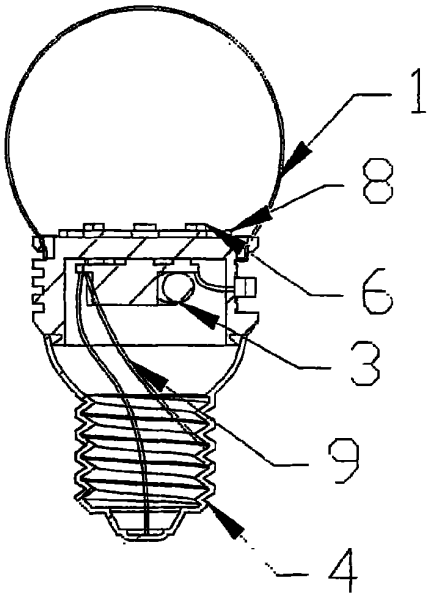

图 3

Luminex v. Signify
Luminex Exhibit 1007
Page 215

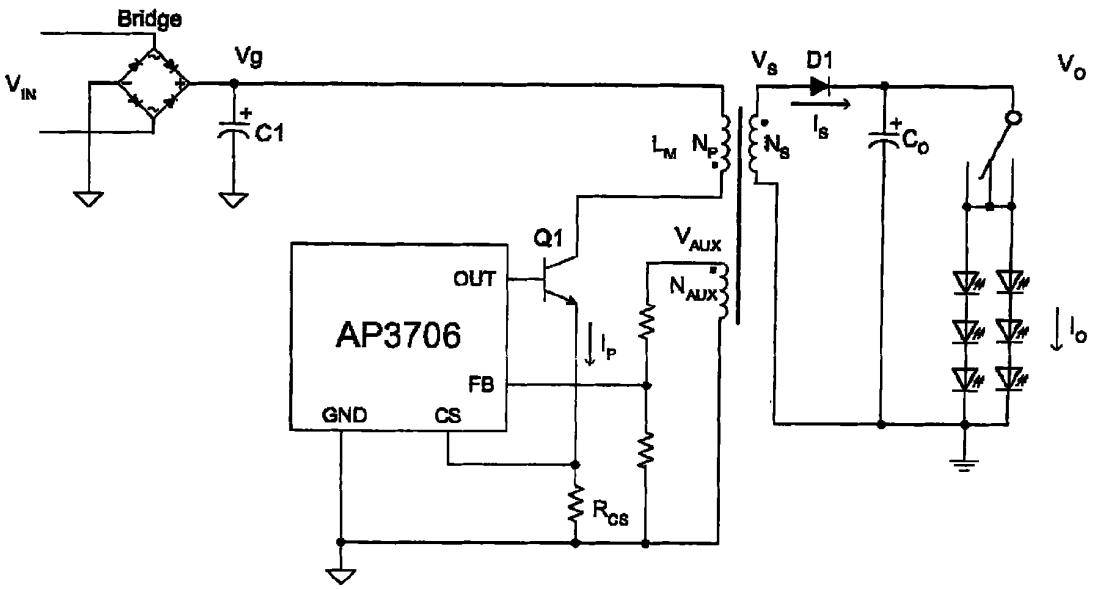

图 4

Luminex v. Signify
Luminex Exhibit 1007
Page 216

PCT

NOTIFICATION OF TRANSMITTAL OF THE INTERNATIONAL SEARCH REPORT AND THE WRITTEN OPINION OF THE INTERNATIONAL SEARCHING AUTHORITY, OR THE DECLARATION

(PCT Rule 44.1)

To:
Timothy Smith
King & Spalding 1100 Louisiana, Suite 4000
Houston, TX 77002-5213
United States of America

JAN 14 2019
HOUSTON DOCKETING

Date of mailing *(day/month/year)* 29 November 2018 (29.11.2018)	
Applicant's or agent's file reference 13682.227347 3/12-HLD-344 PCT	**FOR FURTHER ACTION** See paragraphs 1 and 4 below
International application No. PCT/US 2018/047718	International filing date *(day/month/year)* 23 August 2018 (23.08.2018)
Applicant EATON INTELLIGENT POWER LIMITED	

DOCKETED ☑ UPDATED ☐
Previously ____ NotRequired ____
Applicants ____
Attorney ____
ActionRequired: ARTICLE 19 DUE
Date: 1/29/2019
Checked ____

1. [X] The applicant is hereby notified that the international search report and the written opinion of the International Searching Authority have been established and are transmitted herewith.

   Filing of amendments and statement under Article 19:

   The applicant is entitled, if he so wishes, to amend the claims of the international application (see Rule 46).

   When? The time limit for filing such amendments is normally two months from the date of transmittal of the international search report.

   How? Directly to the International Bureau of WIPO, preferably through ePCT or on paper to, 34 chemin des Colombettes 1211 Geneva 20, Switzerland, Facsimile No.: +41 22 338 82 70

   For more detailed instructions, see *PCT Applicant's Guide*, International Phase, paragraphs 9.004 – 9.011.

2. [ ] The applicant is hereby notified that no international search report will be established and that the declaration under Article 17(2)(a) to that effect and the written opinion of the International Searching Authority are transmitted herewith.

3. [ ] **With regard to any protest** against payment of (an) additional fee(s) under Rule 40.2, the applicant is notified that:

   [ ] the protest together with the decision thereon has been transmitted to the International Bureau together with any request to forward the texts of both the protest and the decision thereon to the designated Offices.

   [ ] no decision has been made yet on the protest; the applicant will be notified as soon as a decision is made.

4. **Reminders**

   The applicant may **submit comments on an informal basis on the written opinion of the International Searching Authority** to the International Bureau. These comments will be made available to the public after international publication. The International Bureau will send a copy of such comments to all designated Offices unless an international preliminary examination report has been or is to be established.

   Shortly after the expiration of **18 months from the priority date, the international application will be published** by the International Bureau. If the applicant wishes to avoid or postpone publication, a notice of withdrawal of the international application, or of the priority claim, must reach the International Bureau before the completion of the technical preparations for international publication (Rules 90*bis*.1 and 90*bis*.3).

   Within **19 months** from the priority date, but only in respect of some designated Offices, a demand for international preliminary examination must be filed if the applicant wishes to postpone the entry into the national phase **until 30 months** from the priority date (in some Offices even later); otherwise, the applicant must, **within 20 months** from the priority date, perform the prescribed acts for **entry into the national phase** before those designated Offices. In respect of other designated Offices, the time limit of **30 months** (or later) will apply even if no demand is filed within 19 months. For details about the applicable time limits, Office by Office, see www.wipo.int/pct/en/texts/time_limits.html and the *PCT Applicant's Guide*, National Chapters.

   Within **22 months from priority date, the applicant may request that a supplementary international search be carried out** by a different International Searching Authority that offers this service (Rule 45*bis*.1). The procedure for requesting supplementary international search is described in the *PCT Applicant's Guide*, International Phase, paragraphs 8.006-8.032.

Name and mailing address of the ISA/RU: Federal Institute of Industrial Property, Berezhkovskaya nab., 30-1, Moscow, G-59, GSP-3, Russia, 125993 Facsimile No: (8-495) 531-63-18, (8-499) 243-33-37	Authorized officer O. Makarova Telephone No. 8-495-531-64-81

Form PCT/ISA/220 (July 2017)

PCT

INTERNATIONAL SEARCH REPORT

(PCT Article 18 and Rules 43 and 44)

Applicant's or agent's file reference 13682.227347	**FOR FURTHER ACTION**	see Form PCT/ISA/220 as well as, where applicable, item 5 below.
International application No. PCT/US 2018/047718	International filing date *(day/month/year)* 23 August 2018 (23.08.2018)	(Earliest) Priority Date *(day/month/year)* 24 August 2017 (24.08.2017)
Applicant EATON INTELLIGENT POWER LIMITED		

This international search report has been prepared by this International Searching Authority and is transmitted to the applicant according to Article 18. A copy is being transmitted to the International Bureau.

This international search report consists of a total of 3 sheets.

☐ It is also accompanied by a copy of each prior art document cited in this report.

1. **Basis of the report**
   a. With regard to the **language**, the international search was carried out on the basis of:
      ☒ the international application in the language in which it was filed.
      ☐ a translation of the international application into _____, which is the language of a translation furnished for the purposes of international search (Rules 12.3(a) and 23.1(b)).
   b. ☐ This international search report has been established taking into account the **rectification of an obvious mistake** authorized by or notified to this Authority under Rule 91 (Rule 43.6*bis*(a)).
   c. ☐ With regard to any **nucleotide and/or amino acid sequence** disclosed in the international application, see Box No. I.
2. ☐ **Certain claims were found unsearchable** (see Box No. II).
3. ☐ **Unity of invention is lacking** (see Box No. III).
4. With regard to the **title,**
   ☒ the text is approved as submitted by the applicant.
   ☐ the text has been established by this Authority to read as follows:
5. With regard to the **abstract,**
   ☒ the text is approved as submitted by the applicant.
   ☐ the text has been established, according to Rule 38.2, by this Authority as it appears in Box No. IV. The applicant may, within one month from the date of mailing of this international search report, submit comments to this Authority.
6. With regard to the **drawings,**
   a. the figure of the drawings to be published with the abstract is Figure No. 1A
      ☐ as suggested by the applicant.
      ☒ as selected by this Authority, because the applicant failed to suggest a figure.
      ☐ as selected by this Authority, because this figure better characterizes the invention.
   b. ☐ none of the figures is to be published with the abstract.

Luminex v. Signify
Luminex Exhibit 1007
Page 218

INTERNATIONAL SEARCH REPORT	PCT/US 2018/047718

A. CLASSIFICATION OF SUBJECT MATTER

F21V 9/40 *(2018.01)*

According to International Patent Classification (IPC) or to both national classification and IPC

B. FIELDS SEARCHED

Minimum documentation searched (classification system followed by classification symbols)

G06F 13/00, 13/38, 13/40, 13/42, 21/00, 21/50, 21/55, 21/56, 21/00, 21/70, 21/81, H04L 29/06, 29/02, 29/06

Documentation searched other than minimum documentation to the extent that such documents are included in the fields searched

Electronic data base consulted during the international search (name of data base and, where practicable, search terms used)

PatSearch (RUPTO internal), USPTO, PAJ, Esp@cenet, Information Retrieval System of FIPS

C. DOCUMENTS CONSIDERED TO BE RELEVANT

Category*	Citation of document, with indication, where appropriate, of the relevant passages	Relevant to claim No.
Y	US 2013/0114241 A1 (CREE, INC.) 09.05.2013, fig .1-6, 9, paragraphs [0087]-[0091]	1-15
Y	US 8947013 B2 (MARVELL WORLD TRADE LTD.) 03.02.2015, fig .3A, 3B, column 15, lines 23-34, 50-60	1-15
Y	US 9144129 B2 (THE REGENTS OF THE UNIVERSITY OF CALIFORNIA) 22.09.2015, fig. 1,2, column 2, lines 46-51, column 3, lines 22-30, 35-53	3, 4, 6, 7, 9, 10, 12,13
Y	US 9072148 B2 (PANASONIC INTELLECTUAL PROPERTY MANAGEMENT) 30.06.2015, fig. 1, column 4, lines 41-54	5,11
Y	US 2008/0060917 A1 (CHEN CHIA-LI et al) 13.03.2008, fig.1, abstract	15

[X] Further documents are listed in the continuation of Box C. [ ] See patent family annex.

* Special categories of cited documents:

"A" document defining the general state of the art which is not considered to be of particular relevance

"E" earlier document but published on or after the international filing date

"L" document which may throw doubts on priority claim(s) or which is cited to establish the publication date of another citation or other special reason (as specified)

"O" document referring to an oral disclosure, use, exhibition or other means

"P" document published prior to the international filing date but later than the priority date claimed

"T" later document published after the international filing date or priority date and not in conflict with the application but cited to understand the principle or theory underlying the invention

"X" document of particular relevance; the claimed invention cannot be considered novel or cannot be considered to involve an inventive step when the document is taken alone

"Y" document of particular relevance; the claimed invention cannot be considered to involve an inventive step when the document is combined with one or more other such documents, such combination being obvious to a person skilled in the art

"&" document member of the same patent family

Date of the actual completion of the international search	Date of mailing of the international search report
22 October 2018 (22.10.2018)	29 November 2018 (29.11.2018)
Name and mailing address of the ISA/RU: Federal Institute of Industrial Property, Berezhkovskaya nab., 30-1, Moscow, G-59, GSP-3, Russia, 125993 Facsimile No: (8-495) 531-63-18, (8-499) 243-33-37	Authorized officer T. Vlasenko Telephone No. (495) 531-64-81

Form PCT/ISA/210 (second sheet) (January 2015)

C (Continuation). DOCUMENTS CONSIDERED TO BE RELEVANT

Category*	Citation of document, with indication, where appropriate, of the relevant passages	Relevant to claim No.
A	US 6149283 A (RENSSELAER POLYTECHNIC INSTITUTE (RPI) 21.11.2000, abstract	1-15
A	CN 201844227 U (TIANJIN STAR SEA ELECTRONICS TECHNOLOGY CO LTD) 25.05.2011, claims, fig .3	1-15
A	US 6127783 A (PHILIPS ELECTRONICS NORTH AMERICA CORP.) 03.10.2000	1-15

PTO/SB/30EFS (07-14)
Approved for use through 07/31/2016. OMB 0651-0031
U.S. Patent and Trademark Office; U.S. DEPARTMENT OF COMMERCE
Under the Paperwork Reduction Act of 1995, no persons are required to respond to a collection of information unless it contains a valid OMB control number.

REQUEST FOR CONTINUED EXAMINATION(RCE)TRANSMITTAL
(Submitted Only via EFS-Web)

Application Number	16014394	Filing Date	2018-06-21	Docket Number (if applicable)	13682.227254	Art Unit	2844
First Named Inventor	John Edward Bowen			Examiner Name	VU, JIMMY T		

This is a Request for Continued Examination (RCE) under 37 CFR 1.114 of the above-identified application.
Request for Continued Examination (RCE) practice under 37 CFR 1.114 does not apply to any utility or plant application filed prior to June 8 1995, to any international application that does not comply with the requirements of 35 U.S.C. 371, or to any design application. The Instruction Sheet for this form is located at WWW.USPTO.GOV.

SUBMISSION REQUIRED UNDER 37 CFR 1.114

Note: If the RCE is proper, any previously filed unentered amendments and amendments enclosed with the RCE will be entered in the orde in which they were filed unless applicant instructs otherwise. If applicant does not wish to have any previously filed unentered amendment(s entered, applicant must request non-entry of such amendment(s).

☐ Previously submitted. If a final Office action is outstanding, any amendments filed after the final Office action may be considered as a submission even if this box is not checked.

- ☐ Consider the arguments in the Appeal Brief or Reply Brief previously filed on _____
- ☐ Other _____

☒ Enclosed

- ☐ Amendment/Reply
- ☒ Information Disclosure Statement (IDS)
- ☐ Affidavit(s)/ Declaration(s)
- ☐ Other _____

MISCELLANEOUS

☐ Suspension of action on the above-identified application is requested under 37 CFR 1.103(c) for a period of months _____
(Period of suspension shall not exceed 3 months; Fee under 37 CFR 1.17(i) required)

☐ Other _____

FEES

☒ **The RCE fee under 37 CFR 1.17(e) is required by 37 CFR 1.114 when the RCE is filed.**
The Director is hereby authorized to charge any underpayment of fees, or credit any overpayments, to
Deposit Account No 110980

SIGNATURE OF APPLICANT, ATTORNEY, OR AGENT REQUIRED

☒ Patent Practitioner Signature
Applicant Signature

PTO/SB/30EFS (07-14)
Approved for use through 07/31/2016. OMB 0651-0031
U.S. Patent and Trademark Office; U.S. DEPARTMENT OF COMMERCE

Under the Paperwork Reduction Act of 1995, no persons are required to respond to a collection of information unless it contains a valid OMB control number.

Signature of Registered U.S. Patent Practitioner			
Signature	/Robert T. Neufeld/	Date (YYYY-MM-DD)	2019-01-16
Name	Robert T. Neufeld	Registration Number	48394

This collection of information is required by 37 CFR 1.114. The information is required to obtain or retain a benefit by the public which is t file (and by the USPTO to process) an application. Confidentiality is governed by 35 U.S.C. 122 and 37 CFR 1.11 and 1.14. This collection estimated to take 12 minutes to complete, including gathering, preparing, and submitting the completed application form to the USPTO. Tim will vary depending upon the individual case. Any comments on the amount of time you require to complete this form and/or suggestions fo reducing this burden, should be sent to the Chief Information Officer, U.S. Patent and Trademark Office, U.S. Department of Commerce, P.O. Box 1450, Alexandria, VA 22313-1450.

If you need assistance in completing the form, call 1-800-PTO-9199 and select option 2.

Privacy Act Statement

The Privacy Act of 1974 (P.L. 93-579) requires that you be given certain information in connection with your submission of the attached form related to a patent application or patent. Accordingly, pursuant to the requirements of the Act, please be advised that: (1) the general authority for the collection of this information is 35 U.S.C. 2(b)(2); (2) furnishing of the informatio solicited is voluntary; and (3) the principal purpose for which the information is used by the U.S. Patent and Trademark Office is to process and/or examine your submission related to a patent application or patent. If you do not furnish the requested information, the U.S. Patent and Trademark Office may not be able to process and/or examine your submission, which may result in termination of proceedings or abandonment of the application or expiration of the patent.

The information provided by you in this form will be subject to the following routine uses:

1. The information on this form will be treated confidentially to the extent allowed under the Freedom of Information Act (5 U.S.C. 552) and the Privacy Act (5 U.S.C. 552a). Records from this system of records may be disclosed to the Department of Justice to determine whether the Freedom of Information Act requires disclosure of these records.

2. A record from this system of records may be disclosed, as a routine use, in the course of presenting evidence to a court, magistrate, or administrative tribunal, including disclosures to opposing counsel in the course of settlement negotiations.

3. A record in this system of records may be disclosed, as a routine use, to a Member of Congress submitting a request involving an individual, to whom the record pertains, when the individual has requested assistance from the Member with respect to the subject matter of the record.

4. A record in this system of records may be disclosed, as a routine use, to a contractor of the Agency having need for the information in order to perform a contract. Recipients of information shall be required to comply with the requirements of the Privacy Act of 1974, as amended, pursuant to 5 U.S.C. 552a(m).

5. A record related to an International Application filed under the Patent Cooperation Treaty in this system of records may be disclosed, as a routine use, to the International Bureau of the World Intellectual Property Organization, pursuant to the Patent Cooperation Treaty.

6. A record in this system of records may be disclosed, as a routine use, to another federal agency for purposes of National Security review (35 U.S.C. 181) and for review pursuant to the Atomic Energy Act (42 U.S.C. 218(c)).

7. A record from this system of records may be disclosed, as a routine use, to the Administrator, General Services, or his/her designee, during an inspection of records conducted by GSA as part of that agency's responsibility to recommend improvements in records management practices and programs, under authority of 44 U.S.C. 2904 and 2906. Such disclosure shall be made in accordance with the GSA regulations governing inspection of records for this purpose, and any other relevant (i.e., GSA or Commerce) directive. Such disclosure shall not be used to make determinations about individuals.

8. A record from this system of records may be disclosed, as a routine use, to the public after either publication of the application pursuant to 35 U.S.C. 122(b) or issuance of a patent pursuant to 35 U.S.C. 151. Further, a record ma be disclosed, subject to the limitations of 37 CFR 1.14, as a routine use, to the public if the record was filed in an application which became abandoned or in which the proceedings were terminated and which application is referenced by either a published application, an application open to public inspections or an issued patent.

9. A record from this system of records may be disclosed, as a routine use, to a Federal, State, or local law enforcement agency, if the USPTO becomes aware of a violation or potential violation of law or regulation.

IN THE UNITED STATES PATENT AND TRADEMARK OFFICE

In re Application of:	§	
Steven Walter Pyshos	§	Confirmation No.: **1994**
	§	
Application Serial No: **16/014,394**	§	Group Art Unit: **2844**
	§	
Filed: **06-21-2018**	§	Examiner: **VU, JIMMY T**
	§	
For: **Configurable Lighting System**	§	Attorney Docket: **13682.227254**

INFORMATION DISCLOSURE STATEMENT

Commissioner for Patents
P.O. Box 1450
Alexandria, VA 22313-1450

Sir:

Applicants cite the information on the attached Form PTO/SB/08A, "Information Disclosure Statement by Applicant," pursuant to 37 C.F.R. §§ 1.56, 1.97, and 1.98.

The citation of this information does not constitute an admission that any of the materials are available as a reference or of priority, or a waiver of any right Applicants may have under applicable statutes, Rules of Practice in patent cases, or otherwise.

KING & SPALDING LLP
Intellectual Property Dept. - Patents
1180 Peachtree Street, N.E.
34th Floor
Atlanta, Georgia 30309-3521
Telephone (404) 572-4600
Attorney Docket: 13682.227254

Respectfully submitted,

/Robert T. Neufeld/

Robert T. Neufeld
Reg. No. 48,394

DMSLIBRARY01\32411433.v1

Electronic Patent Application Fee Transmittal

Application Number:	16014394
Filing Date:	21-Jun-2018
Title of Invention:	CONFIGURABLE LIGHTING SYSTEM
First Named Inventor/Applicant Name:	John Edward Bowen
Filer:	Robert Timothy Neufeld
Attorney Docket Number:	13682.227254

Filed as Large Entity

Filing Fees for Utility under 35 USC 111(a)

Description	Fee Code	Quantity	Amount	Sub-Total in USD($)
Basic Filing:				
Pages:				
Claims:				
Miscellaneous-Filing:				
Petition:				
Patent-Appeals-and-Interference:				
Post-Allowance-and-Post-Issuance:				
Extension-of-Time:				

Description	Fee Code	Quantity	Amount	Sub-Total in USD($)
Miscellaneous:				
RCE- 1ST REQUEST	1801	1	1300	1300
		Total in USD ($)		**1300**

Electronic Acknowledgement Receipt

EFS ID:	34868376
Application Number:	16014394
International Application Number:	
Confirmation Number:	1994
Title of Invention:	CONFIGURABLE LIGHTING SYSTEM
First Named Inventor/Applicant Name:	John Edward Bowen
Customer Number:	91764
Filer:	Robert Timothy Neufeld
Filer Authorized By:	
Attorney Docket Number:	13682.227254
Receipt Date:	16-JAN-2019
Filing Date:	21-JUN-2018
Time Stamp:	18:05:20
Application Type:	Utility under 35 USC 111(a)

Payment information:

Submitted with Payment	yes
Payment Type	CARD
Payment was successfully received in RAM	$1300
RAM confirmation Number	011719INTEFSW18063200
Deposit Account	110980
Authorized User	Sally Sexton
The Director of the USPTO is hereby authorized to charge indicated fees and credit any overpayment as follows: 37 CFR 1.16 (National application filing, search, and examination fees) 37 CFR 1.17 (Patent application and reexamination processing fees)	

37 CFR 1.19 (Document supply fees)

37 CFR 1.20 (Post Issuance fees)

37 CFR 1.21 (Miscellaneous fees and charges)

File Listing:

Document Number	Document Description	File Name	File Size(Bytes)/ Message Digest	Multi Part /.zip	Pages (if appl.)
1	Transmittal Letter	227254trans.pdf	92686 8a9ab3c116bcbc413a597dd6be0cae78331da25f	no	1
Warnings:					
Information:					
2	Information Disclosure Statement (IDS) Form (SB08)	227254ids.pdf	144832 15608fcdd6c35da6311ef77e94352cd0511951ea	no	1
Warnings:					
Information:					
This is not an USPTO supplied IDS fillable form					
3	Foreign Reference	cn201844227.pdf	297920 aec582be44eb2a2179c165c18ec20add46c4355f	no	6
Warnings:					
Information:					
4	Foreign Reference	encn201844227.pdf	166903 c2dc2a48166bc6997f9e0df724a907975c2f1cb4	no	5
Warnings:					
Information:					
5	Other Reference-Patent/App/Search documents	ISR.pdf	264994 a39529861e1c9c261f9660c7d936bae6073b154a	no	4
Warnings:					
Information:					
6	Request for Continued Examination (RCE)	rce227254.pdf	1349877 391f9681334c276d9917813da52ccb542d2bbd77	no	3
Warnings:					

Information:					
7	Fee Worksheet (SB06)	fee-info.pdf	30514 ca6b24895a01053eac25d95577a68a3382ea92f9	no	2
Warnings:					
Information:					
			Total Files Size (in bytes):	2347726	

This Acknowledgement Receipt evidences receipt on the noted date by the USPTO of the indicated documents, characterized by the applicant, and including page counts, where applicable. It serves as evidence of receipt similar to a Post Card, as described in MPEP 503.

New Applications Under 35 U.S.C. 111
If a new application is being filed and the application includes the necessary components for a filing date (see 37 CFR 1.53(b)-(d) and MPEP 506), a Filing Receipt (37 CFR 1.54) will be issued in due course and the date shown on this Acknowledgement Receipt will establish the filing date of the application.
National Stage of an International Application under 35 U.S.C. 371
If a timely submission to enter the national stage of an international application is compliant with the conditions of 35 U.S.C. 371 and other applicable requirements a Form PCT/DO/EO/903 indicating acceptance of the application as a national stage submission under 35 U.S.C. 371 will be issued in addition to the Filing Receipt, in due course.
New International Application Filed with the USPTO as a Receiving Office
If a new international application is being filed and the international application includes the necessary components for an international filing date (see PCT Article 11 and MPEP 1810), a Notification of the International Application Number and of the International Filing Date (Form PCT/RO/105) will be issued in due course, subject to prescriptions concerning national security, and the date shown on this Acknowledgement Receipt will establish the international filing date of the application.

OK TO ENTER: /J.T.V/

/J.T.V/ (01/15/2019)

PATENTS

IN THE UNITED STATES PATENT AND TRADEMARK OFFICE

In re Application of:	§	
	§	
John Edward Bowen et al.	§	
	§	Confirmation No.: 1994
	§	
Application Serial No: **16/014,394**	§	Group Art Unit: 2844
	§	
Filed: **June 21, 2018**	§	Examiner: Jimmy T. Vu
	§	
For: **CONFIGURABLE LIGHTING SYSTEM**	§	Atty. Docket No.: **13682.227254**
	§	(18-HLD-218 US)
	§	

RESPONSE TO NOTICE TO FILE CORRECTED APPLICATION PAPERS

Mail Stop Issue Fee
Commissioner for Patents
P.O. Box 1450
Alexandria, VA 22313-1450

Dear Sir:

In Response to the Notice to File Corrected Application Papers mailed November 2, 2018, (hereinafter, "Notice"), Applicants herein provide:

- **Amendments to the Specification,** which begins on page 2 of this paper;
- **Amendments to the Drawings,** which begins on page 4 of this paper; and
- **Remarks** which begin on page 5 of this paper.

I hereby certify that this correspondence is being communicated electronically via EFS-WEB to: Mail Stop Issue Fee, Commissioner for Patents, P.O. Box 1450, Alexandria, VA 22313-1450, on December 31, 2018.

/Sally Sexton/

Sally Sexton

UNITED STATES PATENT AND TRADEMARK OFFICE

UNITED STATES DEPARTMENT OF COMMERCE
United States Patent and Trademark Office
Address: COMMISSIONER FOR PATENTS
P.O. Box 1450
Alexandria, Virginia 22313-1450
www.uspto.gov

APPLICATION NO.	FILING DATE	FIRST NAMED INVENTOR	ATTORNEY DOCKET NO.	CONFIRMATION NO.
16/014,394	06/21/2018	John Edward Bowen	13682.227254	1994

91764 7590 01/22/2019
King & Spalding LLP (Eaton/Cooper)
ATTN: IP Docketing Department
1100 Louisiana Street, Suite 4000
Houston, TX 77002-5213

EXAMINER
VU, JIMMY T

ART UNIT	PAPER NUMBER
2844	

NOTIFICATION DATE	DELIVERY MODE
01/22/2019	ELECTRONIC

Please find below and/or attached an Office communication concerning this application or proceeding.

The time period for reply, if any, is set in the attached communication.

Notice of the Office communication was sent electronically on above-indicated "Notification Date" to the following e-mail address(es):

houpatentdocket@kslaw.com
nduby@kslaw.com

PTOL-90A (Rev. 04/07)

UNITED STATES DEPARTMENT OF COMMERCE
U.S. Patent and Trademark Office
Address: COMMISSIONER FOR PATENTS
P.O. Box 1450
Alexandria, Virginia 22313-1450

APPLICATION NO./ CONTROL NO.	FILING DATE	FIRST NAMED INVENTOR/ PATENT IN REEXAMINATION	ATTORNEY DOCKET NO.
16/014,394	06/21/2018	Bowen et al.	13682.227254

		EXAMINER	
King & Spalding LLP (Eaton/Cooper) ATTN: IP Docketing Department **1100 Louisiana Street, Suite 4000** **Houston, TX 77002-5213**		JIMMY T VU	
		ART UNIT	**PAPER**
		2844	20190115

DATE MAILED: _____

Please find below and/or attached an Office communication concerning this application or proceeding.

Commissioner for Patents

The reference(s) cited in the Information Disclosure Statement (IDS) filed on 01/08/2019 have been considered by the examiner. /JV/

/JIMMY T VU/
Primary Examiner, Art Unit 2844

PTO-90C (Rev.04-03)

Response to Rule 312 Communication	Application No.	Applicant(s)	
	16/014,394	Bowen et al.	
	Examiner	Art Unit	AIA Status
	JIMMY T VU	2844	Yes

-- The MAILING DATE of this communication appears on the cover sheet with the correspondence address --

1. ☑ The amendment filed on 31 December 2018 under 37 CFR 1.312 has been considered, and has been:
   a) ☑ entered.
   b) ☐ entered as directed to matters of form not affecting the scope of the invention.
   c) ☐ disapproved because the amendment was filed after the payment of the issue fee.
   Any amendment filed after the date the issue fee is paid must be accompanied by a petition under 37 CFR 1.313(c)(1) and the required fee to withdraw the application from issue.
   d) ☐ disapproved. See explanation below.
   e) ☐ entered in part. See explanation below.

The 312 amendment filed on 12/31/2018 has been considered and approved for entering. /JV/

/JIMMY T VU/ Primary Examiner, Art Unit 2844	

Luminex v. Signify
Luminex Exhibit 1007
Page 233

PTO/SB/08A (08-03)
Approved for use through 07/31/2006. OMB 0651-0031
U.S. Patent and Trademark Office: U.S. DEPARTMENT OF COMMERCE
Under the Paperwork Reduction Act of 1995 no persons are required to respond to a collection of information unless it contains a valid OMB control number.

Substitute for form 1449A/PTO

INFORMATION DISCLOSURE STATEMENT BY APPLICANT

(use as many sheets as necessary)

Sheet	1	of	1

Complete if Known	
Application Number	**16/014,394**
Filing Date	**06-21-2018**
First Named Inventor	**John Edward Bowen**
Group Art Unit	**2844**
Examiner Name	**Jimmy T. Vu**
Attorney Docket Number	**13682.227254**

U.S. PATENT DOCUMENTS

Examiner Initials *	Cite No. [1]	U.S. Patent Document Number	Kind Code (if known)	Name of Patentee or Applicant of Cited Document	Date of Publication of Cited Document MM-DD- YYYY	Pages Columns Lines Where Relevant Passages or Relevant Figures Appear
	1.	20100237798		Wolf	09-23-2010	

FOREIGN PATENT DOCUMENTS

Examiner Initials *	Cite No. [1]	Foreign Patent Document Office[3]	Number	Kind Code[2] (if known)	Name of Patentee or Applicant of Cited Document	Date of Publication of Cited Document MM-DD- YYYY	Pages Columns Lines Where Relevant Passages or Relevant Figures Appear	T [6]

OTHER PRIOR ART – NON PATENT LITERATURE DOCUMENTS

Examiner Initials *	Cite No. [1]	Include name of the author (in CAPITAL LETTERS) title of the article (when appropriate) title of the item (book magazine journal serial symposium catalog etc.) date page(s) volume-issue number(s) publisher city and/or country where published.	T [6]

Examiner Signature	/JIMMY T VU/	Date Considered	01/15/2019

*EXAMINER: Initial if reference considered whether or not citation is in conformance with MPEP 609. Draw line through citation if not in conformance and not considered. Include copy of this form with next communication to applicant.

[1] Unique citation designation number. [2] See attached Kinds of U.S. Patent Documents. [3] Enter Office that issued the document by the two-letter code (WIPO Standard ST.3). [4] For Japanese patent documents the indication of the year of the reign of the Emperor must precede the serial number of the patent document. [5] Kind of document by the appropriate symbols as indicated on the document under WIPO Standard ST. 16 if possible. [6] Applicant is to place a check mark here if English language Translation is attached.

Burden Hour Statement: This form is estimated to take 2.0 hours to complete. Time will vary depending upon the needs of the individual case. Any comments on the amount of time you are required to complete this form should be sent to the Chief Information Officer U. S. Patent and Trademark Office Washington DC 20231. DO NOT SEND FEES OR COMPLETED FORMS TO THIS ADDRESS. SEND TO: Assistant Commissioner for Patents Washington DC 20231.
DMSLIBRARY01\33475054.v2

ALL REFERENCES CONSIDERED EXCEPT WHERE LINED THROUGH. /J.T.V/

EAST Search History (Prior Art)

Ref #	Hits	Search Query	DBs	Default Operator	Plurals	Time Stamp
L1	16	("8598793"|"20130328503"|"8872438"|"10091855"|"7926300"|"20100237798").PN.	US-PGPUB; USPAT; USOCR; FPRS; EPO; JPO; DERWENT; IBM_TDB	OR	ON	2019/02/04 14:35
L3	13	("20050012457" | "20150296577" | "20170303363" | "6834981" | "7405715" | "7520634" | "7659674" | "7883239" | "8207821" | "8314571" | "8430402" | "9232602" | "9820350").PN. OR ("10091855").URPN.	US-PGPUB; USPAT; USOCR	OR	OFF	2019/02/04 14:38

L4	184	("20020064043" | "20020145708" | "20020191416" | "20030034985" | "20030063462" | "20030076056" | "20030117796" | "20030193816" | "20030197113" | "20040012027" | "20040095779" | "20040105264" | "20040151008" | "20040156199" | "20040160199" | "20040188594" | "20040232812" | "20040233655" | "20040233664" | "20050040774" | "20050062446" | "20050063063" | "20050156103" | "20050161586" | "20060001381" | "20060028156" | "20060072314" | "20080291670" | "20080315774" | "20090194670" | "20090251884" | "20100008087" | "4677533" | "4962687" | "4992704" | "5241459" | "5365084" | "5400228" | "5420482" | "5453849" | "5471052" | "5548493" | "5608213" | "5650843" | "5705804" | "5733028" | "5752766" | "5757111" | "5803592" | "5838247" | "5877490" | "5877849" | "5886351" | "5899557" | "5914487" | "5966393" | "5967652" | "6007209" | "6007225" | "6016038" | "6043873" | "6064061" | "6084250" | "6088091" | "6127783" | "6139166" | "6149283" | "6150774" | "6166496" | "6183086" | "6184628" | "6200002" | "6211626" | "6219140" | "6222172" | "6222623"	US-PGPUB; USPAT; USOCR	OR	OFF	2019/02/04 14:39

EAST Search History (Prior Art)

L5	0	4 and (switch$3 with electrical with cable with (connect$3|coupl$3))	US-PGPUB; USPAT; USOCR; FPRS; EPO; JPO; DERWENT; IBM_TDB	OR	ON	2019/02/04 14:40

EAST Search History (Interference)

		<This search history is empty>				

Index of Claims	Application/Control No.	Applicant(s)/Patent Under Reexamination
	16/014,394	Bowen et al.
	Examiner	**Art Unit**
	JIMMY T VU	2844

✓	Rejected	-	Cancelled	N	Non-Elected	A	Appeal
=	Allowed	÷	Restricted	I	Interference	O	Objected

CLAIMS

☑ Claims renumbered in the same order as presented by applicant ☐ CPA ☐ T.D. ☐ R.1.47

CLAIM		DATE								
Final	Original	02/04/2019								
	1	=								
	2	=								
	3	=								
	4	=								
	5	=								
	6	=								
	7	=								
	8	=								
	9	=								
	10	=								
	11	=								
	12	=								
	13	=								
	14	=								
	15	=								
	16	=								
	17	=								
	18	=								
	19	=								
	20	=								

Luminex v. Signify
Luminex Exhibit 1007
Page 238

Issue Classification	Application/Control No.	Applicant(s)/Patent Under Reexamination
	16/014,394	Bowen et al.
	Examiner	**Art Unit**
	JIMMY T VU	2844

CPC						
Symbol					**Type**	**Version**
H05B	/	33	/	0863	F	2013-01-01
H05B	/	33	/	0845	I	2013-01-01
F21V	/	23	/	002	I	2013-01-01
F21V	/	17	/	12	I	2013-01-01
F21V	/	21	/	088	I	2013-01-01
F21S	/	8	/	026	I	2013-01-01
F21V	/	23	/	04	I	2013-01-01
F21Y	/	2115	/	10	A	2016-08-01

CPC Combination Sets								
Symbol					**Type**	**Set**	**Ranking**	**Version**
	/		/					

NONE (Assistant Examiner)	(Date)	**Total Claims Allowed:** 20	
/JIMMY T VU/ Primary Examiner, Art Unit 2844 (Primary Examiner)	04 February 2019 (Date)	O.G. Print Claim(s) 1	O.G. Print Figure 1A

U.S. Patent and Trademark Office

Part of Paper No.: 20190204

Luminex v. Signify
Luminex Exhibit 1007
Page 239

Issue Classification	Application/Control No.	Applicant(s)/Patent Under Reexamination
	16/014,394	Bowen et al.
	Examiner	**Art Unit**
	JIMMY T VU	2844

INTERNATIONAL CLASSIFICATION				
CLAIMED				
H05B	/	33	/	08

NON-CLAIMED				
	/		/	

US ORIGINAL CLASSIFICATION	
CLASS	**SUBCLASS**
315	294

CROSS REFERENCES(S)						
CLASS	**SUBCLASS (ONE SUBCLASS PER BLOCK)**					

NONE (Assistant Examiner)	(Date)	**Total Claims Allowed:** 20	
/JIMMY T VU/ Primary Examiner, Art Unit 2844 (Primary Examiner)	04 February 2019 (Date)	O.G. Print Claim(s) 1	O.G. Print Figure 1A

U.S. Patent and Trademark Office

Part of Paper No.: 20190204

Luminex v. Signify
Luminex Exhibit 1007
Page 240

Issue Classification	Application/Control No.	Applicant(s)/Patent Under Reexamination
	16/014,394	Bowen et al.
	Examiner	**Art Unit**
	JIMMY T VU	2844

☑ Claims renumbered in the same order as presented by applicant ☐ CPA ☐ T.D. ☐ R.1.47

CLAIMS

Final	Original	Final	Original	Final	Original	Final	Original	Final	Original	Final	Original	Final	Original	Final	Original
	1		10		19										
	2		11		20										
	3		12												
	4		13												
	5		14												
	6		15												
	7		16												
	8		17												
	9		18												

NONE (Assistant Examiner)	(Date)	**Total Claims Allowed:** 20	
/JIMMY T VU/ Primary Examiner, Art Unit 2844 (Primary Examiner)	04 February 2019 (Date)	O.G. Print Claim(s) 1	O.G. Print Figure 1A

U.S. Patent and Trademark Office Part of Paper No.: 20190204

Luminex v. Signify
Luminex Exhibit 1007
Page 241

PTO/SB/08A (08-03)
Approved for use through 07/31/2006. OMB 0651-0031
U.S. Patent and Trademark Office: U.S. DEPARTMENT OF COMMERCE
Under the Paperwork Reduction Act of 1995 no persons are required to respond to a collection of information unless it contains a valid OMB control number.

Substitute for form 1449A/PTO

INFORMATION DISCLOSURE STATEMENT BY APPLICANT

(use as many sheets as necessary)

Sheet	1	of	1

Complete if Known	
Application Number	**16/014394**
Filing Date	**06-21-2018**
First Named Inventor	**John Edward Bowen**
Group Art Unit	**2844**
Examiner Name	**Jimmy T. Vu**
Attorney Docket Number	**13682.227254**

U.S. PATENT DOCUMENTS

Examiner Initials *	Cite No. [1]	U.S. Patent Document Number	Kind Code (if known)	Name of Patentee or Applicant of Cited Document	Date of Publication of Cited Document MM-DD- YYYY	Pages Columns Lines Where Relevant Passages or Relevant Figures Appear
	1.	2013/0114241		Antony Paul Van de Ven. et al.	05-09-2013	
	2.	8947013		Sehat Sutardja et al.	02-03-2015	
	3.	9144129		David Munday et al.	09-22-2015	
	4.	9072148		Kenichiro Tanaka et al.	06-30-2015	
	5.	2008/0060917		Chen Chia-Li et al.	03-13-2008	
	6.	6149283		Kathryn M. Conway et al.	11-21-2000	
	7.	6127783		Michael D. Pashley et al.	10-03-2000	

FOREIGN PATENT DOCUMENTS

Examiner Initials *	Cite No. [1]	Foreign Patent Document Office[3]	Number	Kind Code[2] (if known)	Name of Patentee or Applicant of Cited Document	Date of Publication of Cited Document MM-DD- YYYY	Pages Columns Lines Where Relevant Passages or Relevant Figures Appear	T [6]
	8.	CN	201844227		Tianjin Star Sea Electronics Technology Co LTD.	05-25-2011		

OTHER PRIOR ART – NON PATENT LITERATURE DOCUMENTS

Examiner Initials *	Cite No. [1]	Include name of the author (in CAPITAL LETTERS) title of the article (when appropriate) title of the item (book magazine journal serial symposium catalog etc.) date page(s) volume-issue number(s) publisher city and/or country where published.	T [6]
	9	International Search Report for PCT/US2018/047718, mailed November 29, 2018.	

Examiner Signature	/JIMMY T VU/	Date Considered	02/04/2019

*EXAMINER: Initial if reference considered whether or not citation is in conformance with MPEP 609. Draw line through citation if not in conformance and not considered. Include copy of this form with next communication to applicant.

[1] Unique citation designation number. [2] See attached Kinds of U.S. Patent Documents. [3] Enter Office that issued the document by the two-letter code (WIPO Standard ST.3). [4] For Japanese patent documents the indication of the year of the reign of the Emperor must precede the serial number of the patent document. [5] Kind of document by the appropriate symbols as indicated on the document under WIPO Standard ST. 16 if possible. [6] Applicant is to place a check mark here if English language Translation is attached.

Burden Hour Statement: This form is estimated to take 2.0 hours to complete. Time will vary depending upon the needs of the individual case. Any comments on the amount of time you are required to complete this form should be sent to the Chief Information Officer U. S. Patent and Trademark Office Washington DC 20231. DO NOT SEND FEES OR COMPLETED FORMS TO THIS ADDRESS. SEND TO: Assistant Commissioner for Patents Washington DC 20231.
DMSLIBRARY01\33726605.v1

ALL REFERENCES CONSIDERED EXCEPT WHERE LINED THROUGH. /J.T.V/

UNITED STATES PATENT AND TRADEMARK OFFICE

UNITED STATES DEPARTMENT OF COMMERCE
United States Patent and Trademark Office
Address: COMMISSIONER FOR PATENTS
P.O. Box 1450
Alexandria, Virginia 22313-1450
www.uspto.gov

BIB DATA SHEET

CONFIRMATION NO. 1994

SERIAL NUMBER	FILING or 371(c) DATE	CLASS	GROUP ART UNIT	ATTORNEY DOCKET NO.
16/014,394	06/21/2018 RULE	315	2844	13682.227254

APPLICANTS
Eaton Intelligent Power Limited, Dublin, IRELAND;

INVENTORS
John Edward Bowen, Sharpsburg, GA;
Raymond Janik, Fayetteville, GA;

**** CONTINUING DATA ****************************
This application is a CIP of 15/811,062 11/13/2017
which is a CON of 15/435,141 02/16/2017 PAT 9820350
which claims benefit of 62/297,424 02/19/2016

**** FOREIGN APPLICATIONS ****************************

**** IF REQUIRED, FOREIGN FILING LICENSE GRANTED ****

Foreign Priority claimed ☐ Yes ☑ No 35 USC 119(a-d) conditions met ☐ Yes ☑ No Verified and Acknowledged /JIMMY T VU/ Examiner's Signature	☐ Met after Allowance /JV/ Initials	STATE OR COUNTRY	SHEETS DRAWINGS	TOTAL CLAIMS	INDEPENDENT CLAIMS
		GA	18	20	2

ADDRESS
King & Spalding LLP (Eaton/Cooper)
ATTN: IP Docketing Department
1100 Louisiana Street, Suite 4000
Houston, TX 77002-5213
UNITED STATES

TITLE
CONFIGURABLE LIGHTING SYSTEM

FILING FEE RECEIVED		
1880	FEES: Authority has been given in Paper No._____ to charge/credit DEPOSIT ACCOUNT No._____ for following:	☐ All Fees ☐ 1.16 Fees (Filing) ☐ 1.17 Fees (Processing Ext. of time) ☐ 1.18 Fees (Issue) ☐ Other _____ ☐ Credit

Search Notes	Application/Control No.	Applicant(s)/Patent Under Reexamination
	16/014,394	Bowen et al.
	Examiner	**Art Unit**
	JIMMY T VU	2844

CPC - Searched*		
Symbol	**Date**	**Examiner**
H05B37/02|H05B33/08|H05B33/0845|H05B33/0863|F21K9/62|F21S8/026|F21V3/02|F21V5/04|F21V7/00|F21V17/12|F21V21/088|F21V23/001|F21Y2113/13|F21Y2115/10	9/30/18	JV

CPC Combination Sets - Searched*		
Symbol	**Date**	**Examiner**

US Classification - Searched*			
Class	**Subclass**	**Date**	**Examiner**
315	151,185R,209R,291,294,307,308,312	9/30/18	JV

* See search history printout included with this form or the SEARCH NOTES box below to determine the scope of the search.

Search Notes		
Search Notes	**Date**	**Examiner**
Class/subclass, CPC, Text, Assignment data, Inventor name, &Back/Forward search (EAST)	9/30/18	JV
considered IDS	9/30/18	JV
updated search	10/1/18	JV
considered IDS	02/04/2019	JV
updated search	02/04/2019	JV

Luminex v. Signify
Luminex Exhibit 1007
Page 244

Search Notes	Application/Control No.	Applicant(s)/Patent Under Reexamination
	16/014,394	Bowen et al.
	Examiner	**Art Unit**
	JIMMY T VU	2844

Interference Search			
US Class/CPC Symbol	**US Subclass/CPC Group**	**Date**	**Examiner**
315	294	10/1/18	JV
USPAT, US-PGPUB	see interference search	10/1/18	JV
H05B	33/08		

Luminex v. Signify
Luminex Exhibit 1007
Page 245

UNITED STATES PATENT AND TRADEMARK OFFICE

UNITED STATES DEPARTMENT OF COMMERCE
United States Patent and Trademark Office
Address: COMMISSIONER FOR PATENTS
P.O. Box 1450
Alexandria, Virginia 22313-1450
www.uspto.gov

NOTICE OF ALLOWANCE AND FEE(S) DUE

91764 7590 02/12/2019
King & Spalding LLP (Eaton/Cooper)
ATTN: IP Docketing Department
1100 Louisiana Street, Suite 4000
Houston, TX 77002-5213

EXAMINER
VU, JIMMY T

ART UNIT	PAPER NUMBER
2844	

DATE MAILED: 02/12/2019

APPLICATION NO.	FILING DATE	FIRST NAMED INVENTOR	ATTORNEY DOCKET NO.	CONFIRMATION NO.
16/014,394	06/21/2018	John Edward Bowen	13682.227254	1994

TITLE OF INVENTION: CONFIGURABLE LIGHTING SYSTEM

APPLN. TYPE	ENTITY STATUS	ISSUE FEE DUE	PUBLICATION FEE DUE	PREV. PAID ISSUE FEE	TOTAL FEE(S) DUE	DATE DUE
nonprovisional	UNDISCOUNTED	$1000	$0.00	$0.00	$1000	05/13/2019

THE APPLICATION IDENTIFIED ABOVE HAS BEEN EXAMINED AND IS ALLOWED FOR ISSUANCE AS A PATENT. PROSECUTION ON THE MERITS IS CLOSED. THIS NOTICE OF ALLOWANCE IS NOT A GRANT OF PATENT RIGHTS. THIS APPLICATION IS SUBJECT TO WITHDRAWAL FROM ISSUE AT THE INITIATIVE OF THE OFFICE OR UPON PETITION BY THE APPLICANT. SEE 37 CFR 1.313 AND MPEP 1308.

THE ISSUE FEE AND PUBLICATION FEE (IF REQUIRED) MUST BE PAID WITHIN THREE MONTHS FROM THE MAILING DATE OF THIS NOTICE OR THIS APPLICATION SHALL BE REGARDED AS ABANDONED. THIS STATUTORY PERIOD CANNOT BE EXTENDED. SEE 35 U.S.C. 151. THE ISSUE FEE DUE INDICATED ABOVE DOES NOT REFLECT A CREDIT FOR ANY PREVIOUSLY PAID ISSUE FEE IN THIS APPLICATION. IF AN ISSUE FEE HAS PREVIOUSLY BEEN PAID IN THIS APPLICATION (AS SHOWN ABOVE), THE RETURN OF PART B OF THIS FORM WILL BE CONSIDERED A REQUEST TO REAPPLY THE PREVIOUSLY PAID ISSUE FEE TOWARD THE ISSUE FEE NOW DUE.

HOW TO REPLY TO THIS NOTICE:

I. Review the ENTITY STATUS shown above. If the ENTITY STATUS is shown as SMALL or MICRO, verify whether entitlement to that entity status still applies.

If the ENTITY STATUS is the same as shown above, pay the TOTAL FEE(S) DUE shown above.

If the ENTITY STATUS is changed from that shown above, on PART B - FEE(S) TRANSMITTAL, complete section number 5 titled "Change in Entity Status (from status indicated above)".

For purposes of this notice, small entity fees are 1/2 the amount of undiscounted fees, and micro entity fees are 1/2 the amount of small entity fees.

II. PART B - FEE(S) TRANSMITTAL, or its equivalent, must be completed and returned to the United States Patent and Trademark Office (USPTO) with your ISSUE FEE and PUBLICATION FEE (if required). If you are charging the fee(s) to your deposit account, section "4b" of Part B - Fee(s) Transmittal should be completed and an extra copy of the form should be submitted. If an equivalent of Part B is filed, a request to reapply a previously paid issue fee must be clearly made, and delays in processing may occur due to the difficulty in recognizing the paper as an equivalent of Part B.

III. All communications regarding this application must give the application number. Please direct all communications prior to issuance to Mail Stop ISSUE FEE unless advised to the contrary.

IMPORTANT REMINDER: Maintenance fees are due in utility patents issuing on applications filed on or after Dec. 12, 1980. It is patentee's responsibility to ensure timely payment of maintenance fees when due. More information is available at www.uspto.gov/PatentMaintenanceFees.

PTOL-85 (Rev. 02/11)

Luminex v. Signify
Luminex Exhibit 1007
Page 246

PART B - FEE(S) TRANSMITTAL

Complete and send this form, together with applicable fee(s), by mail or fax, or via EFS-Web.

By mail, send to: Mail Stop ISSUE FEE
Commissioner for Patents
P.O. Box 1450
Alexandria, Virginia 22313-1450

By fax, send to: (571)-273-2885

INSTRUCTIONS: This form should be used for transmitting the ISSUE FEE and PUBLICATION FEE (if required). Blocks 1 through 5 should be completed where appropriate. All further correspondence including the Patent, advance orders and notification of maintenance fees will be mailed to the current correspondence address as indicated unless corrected below or directed otherwise in Block 1, by (a) specifying a new correspondence address; and/or (b) indicating a separate "FEE ADDRESS" for maintenance fee notifications.

CURRENT CORRESPONDENCE ADDRESS (Note: Use Block 1 for any change of address)

91764 7590 02/12/2019
King & Spalding LLP (Eaton/Cooper)
ATTN: IP Docketing Department
1100 Louisiana Street, Suite 4000
Houston, TX 77002-5213

Note: A certificate of mailing can only be used for domestic mailings of the Fee(s) Transmittal. This certificate cannot be used for any other accompanying papers. Each additional paper, such as an assignment or formal drawing, must have its own certificate of mailing or transmission.

Certificate of Mailing or Transmission

I hereby certify that this Fee(s) Transmittal is being deposited with the United States Postal Service with sufficient postage for first class mail in an envelope addressed to the Mail Stop ISSUE FEE address above, or being transmitted to the USPTO via EFS-Web or by facsimile to (571) 273-2885, on the date below.

(Typed or printed name)
(Signature)
(Date)

APPLICATION NO.	FILING DATE	FIRST NAMED INVENTOR	ATTORNEY DOCKET NO.	CONFIRMATION NO.
16/014,394	06/21/2018	John Edward Bowen	13682.227254	1994

TITLE OF INVENTION: CONFIGURABLE LIGHTING SYSTEM

APPLN. TYPE	ENTITY STATUS	ISSUE FEE DUE	PUBLICATION FEE DUE	PREV. PAID ISSUE FEE	TOTAL FEE(S) DUE	DATE DUE
nonprovisional	UNDISCOUNTED	$1000	$0.00	$0.00	$1000	05/13/2019

EXAMINER	ART UNIT	CLASS-SUBCLASS
VU, JIMMY T	2844	315-294000

1. Change of correspondence address or indication of "Fee Address" (37 CFR 1.363).

❑ Change of correspondence address (or Change of Correspondence Address form PTO/SB/122) attached.

❑ "Fee Address" indication (or "Fee Address" Indication form PTO/SB/47; Rev 03-09 or more recent) attached. **Use of a Customer Number is required.**

2. For printing on the patent front page, list
(1) The names of up to 3 registered patent attorneys or agents OR, alternatively,
(2) The name of a single firm (having as a member a registered attorney or agent) and the names of up to 2 registered patent attorneys or agents. If no name is listed, no name will be printed.

1_____
2_____
3_____

3. ASSIGNEE NAME AND RESIDENCE DATA TO BE PRINTED ON THE PATENT (print or type)

PLEASE NOTE: Unless an assignee is identified below, no assignee data will appear on the patent. If an assignee is identified below, the document must have been previously recorded, or filed for recordation, as set forth in 37 CFR 3.11 and 37 CFR 3.81(a). Completion of this form is NOT a substitute for filing an assignment.

(A) NAME OF ASSIGNEE (B) RESIDENCE: (CITY and STATE OR COUNTRY)

Please check the appropriate assignee category or categories (will not be printed on the patent) : ❑ Individual ❑ Corporation or other private group entity ❑ Government

4a. Fees submitted: ❑Issue Fee ❑Publication Fee (if required) ❑Advance Order - # of Copies _____

4b. Method of Payment: *(Please first reapply any previously paid fee shown above)*

❑ Electronic Payment via EFS-Web ❑ Enclosed check ❑ Non-electronic payment by credit card (Attach form PTO-2038)

❑ The Director is hereby authorized to charge the required fee(s), any deficiency, or credit any overpayment to Deposit Account No. _____

5. **Change in Entity Status** (from status indicated above)

❑ Applicant certifying micro entity status. See 37 CFR 1.29

❑ Applicant asserting small entity status. See 37 CFR 1.27

❑ Applicant changing to regular undiscounted fee status.

NOTE: Absent a valid certification of Micro Entity Status (see forms PTO/SB/15A and 15B), issue fee payment in the micro entity amount will not be accepted at the risk of application abandonment.
NOTE: If the application was previously under micro entity status, checking this box will be taken to be a notification of loss of entitlement to micro entity status.
NOTE: Checking this box will be taken to be a notification of loss of entitlement to small or micro entity status, as applicable.

NOTE: This form must be signed in accordance with 37 CFR 1.31 and 1.33. See 37 CFR 1.4 for signature requirements and certifications.

Authorized Signature _____ Date _____

Typed or printed name _____ Registration No. _____

Luminex v. Signify
Luminex Exhibit 1007
Page 247

UNITED STATES DEPARTMENT OF COMMERCE
United States Patent and Trademark Office
Address: COMMISSIONER FOR PATENTS
P.O. Box 1450
Alexandria, Virginia 22313-1450
www.uspto.gov

APPLICATION NO.	FILING DATE	FIRST NAMED INVENTOR	ATTORNEY DOCKET NO.	CONFIRMATION NO.
16/014,394	06/21/2018	John Edward Bowen	13682.227254	1994

91764 7590 02/12/2019
King & Spalding LLP (Eaton/Cooper)
ATTN: IP Docketing Department
1100 Louisiana Street, Suite 4000
Houston, TX 77002-5213

EXAMINER
VU, JIMMY T

ART UNIT	PAPER NUMBER
2844	

DATE MAILED: 02/12/2019

Determination of Patent Term Adjustment under 35 U.S.C. 154 (b)
(Applications filed on or after May 29, 2000)

The Office has discontinued providing a Patent Term Adjustment (PTA) calculation with the Notice of Allowance.

Section 1(h)(2) of the AIA Technical Corrections Act amended 35 U.S.C. 154(b)(3)(B)(i) to eliminate the requirement that the Office provide a patent term adjustment determination with the notice of allowance. See Revisions to Patent Term Adjustment, 78 Fed. Reg. 19416, 19417 (Apr. 1, 2013). Therefore, the Office is no longer providing an initial patent term adjustment determination with the notice of allowance. The Office will continue to provide a patent term adjustment determination with the Issue Notification Letter that is mailed to applicant approximately three weeks prior to the issue date of the patent, and will include the patent term adjustment on the patent. Any request for reconsideration of the patent term adjustment determination (or reinstatement of patent term adjustment) should follow the process outlined in 37 CFR 1.705.

Any questions regarding the Patent Term Extension or Adjustment determination should be directed to the Office of Patent Legal Administration at (571)-272-7702. Questions relating to issue and publication fee payments should be directed to the Customer Service Center of the Office of Patent Publication at 1-(888)-786-0101 or (571)-272-4200.

OMB Clearance and PRA Burden Statement for PTOL-85 Part B

The Paperwork Reduction Act (PRA) of 1995 requires Federal agencies to obtain Office of Management and Budget approval before requesting most types of information from the public. When OMB approves an agency request to collect information from the public, OMB (i) provides a valid OMB Control Number and expiration date for the agency to display on the instrument that will be used to collect the information and (ii) requires the agency to inform the public about the OMB Control Number's legal significance in accordance with 5 CFR 1320.5(b).

The information collected by PTOL-85 Part B is required by 37 CFR 1.311. The information is required to obtain or retain a benefit by the public which is to file (and by the USPTO to process) an application. Confidentiality is governed by 35 U.S.C. 122 and 37 CFR 1.14. This collection is estimated to take 30 minutes to complete, including gathering, preparing, and submitting the completed application form to the USPTO. Time will vary depending upon the individual case. Any comments on the amount of time you require to complete this form and/or suggestions for reducing this burden, should be sent to the Chief Information Officer, U.S. Patent and Trademark Office, U.S. Department of Commerce, P.O. Box 1450, Alexandria, Virginia 22313-1450. DO NOT SEND FEES OR COMPLETED FORMS TO THIS ADDRESS. SEND TO: Commissioner for Patents, P.O. Box 1450, Alexandria, Virginia 22313-1450. Under the Paperwork Reduction Act of 1995, no persons are required to respond to a collection of information unless it displays a valid OMB control number.

Privacy Act Statement

The Privacy Act of 1974 (P.L. 93-579) requires that you be given certain information in connection with your submission of the attached form related to a patent application or patent. Accordingly, pursuant to the requirements of the Act, please be advised that: (1) the general authority for the collection of this information is 35 U.S.C. 2(b)(2); (2) furnishing of the information solicited is voluntary; and (3) the principal purpose for which the information is used by the U.S. Patent and Trademark Office is to process and/or examine your submission related to a patent application or patent. If you do not furnish the requested information, the U.S. Patent and Trademark Office may not be able to process and/or examine your submission, which may result in termination of proceedings or abandonment of the application or expiration of the patent.

The information provided by you in this form will be subject to the following routine uses:

1. The information on this form will be treated confidentially to the extent allowed under the Freedom of Information Act (5 U.S.C. 552) and the Privacy Act (5 U.S.C 552a). Records from this system of records may be disclosed to the Department of Justice to determine whether disclosure of these records is required by the Freedom of Information Act.
2. A record from this system of records may be disclosed, as a routine use, in the course of presenting evidence to a court, magistrate, or administrative tribunal, including disclosures to opposing counsel in the course of settlement negotiations.
3. A record in this system of records may be disclosed, as a routine use, to a Member of Congress submitting a request involving an individual, to whom the record pertains, when the individual has requested assistance from the Member with respect to the subject matter of the record.
4. A record in this system of records may be disclosed, as a routine use, to a contractor of the Agency having need for the information in order to perform a contract. Recipients of information shall be required to comply with the requirements of the Privacy Act of 1974, as amended, pursuant to 5 U.S.C. 552a(m).
5. A record related to an International Application filed under the Patent Cooperation Treaty in this system of records may be disclosed, as a routine use, to the International Bureau of the World Intellectual Property Organization, pursuant to the Patent Cooperation Treaty.
6. A record in this system of records may be disclosed, as a routine use, to another federal agency for purposes of National Security review (35 U.S.C. 181) and for review pursuant to the Atomic Energy Act (42 U.S.C. 218(c)).
7. A record from this system of records may be disclosed, as a routine use, to the Administrator, General Services, or his/her designee, during an inspection of records conducted by GSA as part of that agency's responsibility to recommend improvements in records management practices and programs, under authority of 44 U.S.C. 2904 and 2906. Such disclosure shall be made in accordance with the GSA regulations governing inspection of records for this purpose, and any other relevant (i.e., GSA or Commerce) directive. Such disclosure shall not be used to make determinations about individuals.
8. A record from this system of records may be disclosed, as a routine use, to the public after either publication of the application pursuant to 35 U.S.C. 122(b) or issuance of a patent pursuant to 35 U.S.C. 151. Further, a record may be disclosed, subject to the limitations of 37 CFR 1.14, as a routine use, to the public if the record was filed in an application which became abandoned or in which the proceedings were terminated and which application is referenced by either a published application, an application open to public inspection or an issued patent.
9. A record from this system of records may be disclosed, as a routine use, to a Federal, State, or local law enforcement agency, if the USPTO becomes aware of a violation or potential violation of law or regulation.

Notice of Allowability	Application No. 16/014,394	Applicant(s) Bowen et al.	
	Examiner JIMMY T VU	Art Unit 2844	AIA Status Yes

-- The MAILING DATE of this communication appears on the cover sheet with the correspondence address--

All claims being allowable, PROSECUTION ON THE MERITS IS (OR REMAINS) CLOSED in this application. If not included herewith (or previously mailed), a Notice of Allowance (PTOL-85) or other appropriate communication will be mailed in due course. **THIS NOTICE OF ALLOWABILITY IS NOT A GRANT OF PATENT RIGHTS.** This application is subject to withdrawal from issue at the initiative of the Office or upon petition by the applicant. See 37 CFR 1.313 and MPEP 1308.

1. ☑ This communication is responsive to RCE filed on 01/16/2019.
   ☐ A declaration(s)/affidavit(s) under **37 CFR 1.130(b)** was/were filed on _____.

2. ☐ An election was made by the applicant in response to a restriction requirement set forth during the interview on _____; the restriction requirement and election have been incorporated into this action.

3. ☑ The allowed claim(s) is/are 1-20 . As a result of the allowed claim(s), you may be eligible to benefit from the **Patent Prosecution Highway** program at a participating intellectual property office for the corresponding application. For more information, please see **http://www.uspto.gov/patents/init_events/pph/index.jsp** or send an inquiry to **PPHfeedback@uspto.gov.**

4. ☐ Acknowledgment is made of a claim for foreign priority under 35 U.S.C. § 119(a)-(d) or (f).

   Certified copies:

   a) ☐All b) ☐ Some *c) ☐ None of the:

   1. ☐ Certified copies of the priority documents have been received.
   2. ☐ Certified copies of the priority documents have been received in Application No. _____ .
   3. ☐ Copies of the certified copies of the priority documents have been received in this national stage application from the International Bureau (PCT Rule 17.2(a)).

   * Certified copies not received: _____ .

Applicant has THREE MONTHS FROM THE "MAILING DATE" of this communication to file areply complying with the requirements noted below. Failure to timely comply will result in ABANDONMENT of this application.
THIS THREE-MONTH PERIOD IS NOT EXTENDABLE.

5. ☐ CORRECTED DRAWINGS (as "replacement sheets") must be submitted.
   ☐ including changes required by the attached Examiner's Amendment / Comment or in the Office action of Paper No./Mail Date _____ .

   Identifying indicia such as the application number (see 37 CFR 1.84(c)) should be written on the drawings in the front (not the back) of each sheet. Replacement sheet(s) should be labeled as such in the header according to 37 CFR 1.121(d).

6. ☐ DEPOSIT OF and/or INFORMATION about the deposit of BIOLOGICAL MATERIAL must be submitted. Note the attached Examiner's comment regarding REQUIREMENT FOR THE DEPOSIT OF BIOLOGICAL MATERIAL.

Attachment(s)

1. ☐ Notice of References Cited (PTO-892)
2. ☑ Information Disclosure Statements (PTO/SB/08), Paper No./Mail Date 1/16/19.
3. ☐ Examiner's Comment Regarding Requirement for Deposit of Biological Material _____.
4. ☐ Interview Summary (PTO-413), Paper No./Mail Date. _____.
5. ☐ Examiner's Amendment/Comment
6. ☐ Examiner's Statement of Reasons for Allowance
7. ☐ Other _____.

/JIMMY T VU/
Primary Examiner, Art Unit 2844

Luminex v. Signify
Luminex Exhibit 1007
Page 250

Electronic Acknowledgement Receipt

EFS ID:	35218959
Application Number:	16014394
International Application Number:	
Confirmation Number:	1994
Title of Invention:	CONFIGURABLE LIGHTING SYSTEM
First Named Inventor/Applicant Name:	John Edward Bowen
Customer Number:	91764
Filer:	Robert Timothy Neufeld
Filer Authorized By:	
Attorney Docket Number:	13682.227254
Receipt Date:	22-FEB-2019
Filing Date:	21-JUN-2018
Time Stamp:	13:21:38
Application Type:	Utility under 35 USC 111(a)

Payment information:

Submitted with Payment	yes
Payment Type	CARD
Payment was successfully received in RAM	$240
RAM confirmation Number	022219INTEFSW13220100
Deposit Account	
Authorized User	
The Director of the USPTO is hereby authorized to charge indicated fees and credit any overpayment as follows:	

File Listing:

Document Number	Document Description	File Name	File Size(Bytes)/ Message Digest	Multi Part /.zip	Pages (if appl.)
1	Transmittal Letter	227254trans.pdf	102704 d7b753826de83fe53feb188e282889d4a32b7044	no	3
Warnings:					
Information:					
2	Information Disclosure Statement (IDS) Form (SB08)	227254ids.pdf	142970 ff112a6c4c8babad5316abc32140907ad29aef49	no	1
Warnings:					
Information:					
This is not an USPTO supplied IDS fillable form					
3	Fee Worksheet (SB06)	fee-info.pdf	30664 0e64a6c0655cc1b30ab82f5afdf8a7e54121a564	no	2
Warnings:					
Information:					
		Total Files Size (in bytes):	276338		

This Acknowledgement Receipt evidences receipt on the noted date by the USPTO of the indicated documents, characterized by the applicant, and including page counts, where applicable. It serves as evidence of receipt similar to a Post Card, as described in MPEP 503.

New Applications Under 35 U.S.C. 111
If a new application is being filed and the application includes the necessary components for a filing date (see 37 CFR 1.53(b)-(d) and MPEP 506), a Filing Receipt (37 CFR 1.54) will be issued in due course and the date shown on this Acknowledgement Receipt will establish the filing date of the application.
National Stage of an International Application under 35 U.S.C. 371
If a timely submission to enter the national stage of an international application is compliant with the conditions of 35 U.S.C. 371 and other applicable requirements a Form PCT/DO/EO/903 indicating acceptance of the application as a national stage submission under 35 U.S.C. 371 will be issued in addition to the Filing Receipt, in due course.
New International Application Filed with the USPTO as a Receiving Office
If a new international application is being filed and the international application includes the necessary components for an international filing date (see PCT Article 11 and MPEP 1810), a Notification of the International Application Number and of the International Filing Date (Form PCT/RO/105) will be issued in due course, subject to prescriptions concerning national security, and the date shown on this Acknowledgement Receipt will establish the international filing date of the application.

PTO/SB/08A (08-03)
Approved for use through 07/31/2006. OMB 0651-0031
U.S. Patent and Trademark Office: U.S. DEPARTMENT OF COMMERCE
Under the Paperwork Reduction Act of 1995 no persons are required to respond to a collection of information unless it contains a valid OMB control number.

Substitute for form 1449A/PTO

INFORMATION DISCLOSURE STATEMENT BY APPLICANT

(use as many sheets as necessary)

Sheet	1	of	1

Complete if Known	
Application Number	**16/014394**
Filing Date	**06-21-2018**
First Named Inventor	**John Edward Bowen**
Group Art Unit	**2844**
Examiner Name	**Jimmy T. Vu**
Attorney Docket Number	**13682.227254**

U.S. PATENT DOCUMENTS

Examiner Initials *	Cite No. [1]	U.S. Patent Document Number	Kind Code (if known)	Name of Patentee or Applicant of Cited Document	Date of Publication of Cited Document MM-DD- YYYY	Pages Columns Lines Where Relevant Passages or Relevant Figures Appear
	1	7014336		Ducharme	03-21-2006	
	2	7255457		Ducharme	08-14-2007	

FOREIGN PATENT DOCUMENTS

Examiner Initials *	Cite No. [1]	Foreign Patent Document Office[3]	Number	Kind Code[2] (if known)	Name of Patentee or Applicant of Cited Document	Date of Publication of Cited Document MM-DD- YYYY	Pages Columns Lines Where Relevant Passages or Relevant Figures Appear	T [6]

OTHER PRIOR ART – NON PATENT LITERATURE DOCUMENTS

Examiner Initials *	Cite No. [1]	Include name of the author (in CAPITAL LETTERS) title of the article (when appropriate) title of the item (book magazine journal serial symposium catalog etc.) date page(s) volume-issue number(s) publisher city and/or country where published.	T [6]

Examiner Signature		Date Considered	

*EXAMINER: Initial if reference considered whether or not citation is in conformance with MPEP 609. Draw line through citation if not in conformance and not considered. Include copy of this form with next communication to applicant.

[1] Unique citation designation number. [2] See attached Kinds of U.S. Patent Documents. [3] Enter Office that issued the document by the two-letter code (WIPO Standard ST.3). [4] For Japanese patent documents the indication of the year of the reign of the Emperor must precede the serial number of the patent document. [5] Kind of document by the appropriate symbols as indicated on the document under WIPO Standard ST. 16 if possible. [6] Applicant is to place a check mark here if English language Translation is attached.

Burden Hour Statement: This form is estimated to take 2.0 hours to complete. Time will vary depending upon the needs of the individual case. Any comments on the amount of time you are required to complete this form should be sent to the Chief Information Officer U. S. Patent and Trademark Office Washington DC 20231. DO NOT SEND FEES OR COMPLETED FORMS TO THIS ADDRESS. SEND TO: Assistant Commissioner for Patents Washington DC 20231.
DMSLIBRARY01\33841516.v1

IN THE UNITED STATES PATENT AND TRADEMARK OFFICE

In re Application of:	§	
Steven Walter Pyshos	§	Confirmation No.: **1994**
	§	
Application Serial No: **16/014,394**	§	Group Art Unit: **2844**
	§	
Filed: **06-21-2018**	§	Examiner: **VU, JIMMY T**
	§	
For: **Configurable Lighting System**	§	Attorney Docket: **13682.227254**

INFORMATION DISCLOSURE STATEMENT

Commissioner for Patents
P.O. Box 1450
Alexandria, VA 22313-1450

Sir:

This Information Disclosure Statement is filed in accordance with 37 C.F.R. §§1.56, 1.97 and 1.98. The items listed on Form SB/08B are made of record to assist the Patent and Trademark Office in its examination of this application. The Examiner is respectfully requested to fully consider the items and to independently ascertain their teaching.

1. ☐ For each of the following items listed on the enclosed copy of Form SB/08B that is not in the English language, an English language translation of that item or a portion thereof or a concise explanation of the relevance of that item is enclosed:

2. ☐ For each of the following items listed on the enclosed copy of Form SB/08B that is not in the English language, a concise explanation of the relevance of that item is provided:

3. ☐ Any copy of the items listed on the enclosed copy of Form SB/08B that is not enclosed with this Information Disclosure Statement was previously cited by or submitted to the Patent and Trademark Office in application Serial No.

4. ☐ No fee is due under 37 C.F.R. §1.17(p) for this Information Disclosure Statement since it is being filed in compliance with:

   ☐ 37 C.F.R. §1.97(b)(1), within three months of the filing date of a national application other than a CPA; or

   ☐ 37 C.F.R. §1.97(b)(2), within three months of the date of entry into the national stage as set forth in §1.491 in an international application; or

☐ 37 C.F.R. §1.97(b)(3), before the mailing date of a first Office action on the merits; or

☐ 37 C.F.R. §1.97(b)(4) before the mailing date of a first office action after the filing of an RCE under §1.114

5. ☐ No fee is due under 37 C.F.R. §1.17(p) for this Supplemental Information Disclosure Statement since it is being filed in compliance with 37 C.F.R. §1.97(c), after the period specified in paragraph 4 above but before the mailing date of a final action or a Notice of Allowance (where there has been no prior final action), and is accompanied by one of the certifications pursuant to 37 C.F.R. §1.97(e) set forth in paragraph 9 below.

6. ☐ A fee is due under 37 C.F.R. §1.17(p) for this Supplemental Information Disclosure Statement since it is being filed in compliance with 37 C.F.R. §1.97(c), after the period specified in paragraph 4 above but before the mailing date of a final action or a notice of allowance (where there has been no prior final action):

☐ Payment of $240.00 is being made with a credit card via EFS-Web.

☐ Charge the fee to Deposit Account No.11-0980, Order No._____.

7. ☒ A fee is due under 37 C.F.R. §1.17(p) for this Supplemental Information Disclosure Statement since it is being filed in compliance with 37 C.F.R. §1.97(d), after the mailing date of a final action or a notice of allowance, whichever comes first, but before payment of the issue fee, and is accompanied by:

a. one of the certifications pursuant to 37 C.F.R. §1.97(e) set forth in paragraph 9 below; and

b. the fee due under 37 C.F.R. §1.17(p) which is paid as set forth in paragraph 11 below.

8. ☐ This Supplemental Information Disclosure Statement is being filed in compliance with:

a. ☐ 37 C.F.R. §1.313(b)(3) or §1.313(c)(1), after the issue fee has been paid and information cited in this Supplemental Information Disclosure Statement may render at least one claim unpatentable and is accompanied by the attached Petition To Withdraw Application From Issue and fee pursuant to 37 C.F.R. §1.17(h);

b. ☐ 37 C.F.R. §1.313(c)(2) or §1.313(c)(3), after the issue fee has been paid and information cited in this Supplemental Information Disclosure Statement is to be considered in a Request for Continued Examination (RCE) or a Continuation application upon abandonment of the instant application and is accompanied by the attached Petition To Withdraw Application From Issue and fee pursuant to 37 C.F.R. §1.17(h).

c. ☐ The fee due under 37 C.F.R. §§1.17(h) is paid as set forth in paragraph 11 below.

9. ☐ I hereby certify that each item of information contained in this Supplemental Information Disclosure Statement was first cited in a communication from a foreign patent office in a counterpart foreign application not more than three months prior to the filing of this Supplemental Information Disclosure Statement.

☒ I hereby certify that no item of information in the Supplemental Information Disclosure Statement filed herewith was cited in a communication from a foreign patent office in a counterpart foreign application or, to my knowledge after making reasonable inquiry, was known to any individual designated in §1.56(c) more than three months prior to the filing of this Supplemental Information Disclosure Statement.

10. ☐ This document is accompanied by ☐ a Search Report ☐ Communication which was cited in a corresponding ☐ PCT or ☐ Foreign counterpart application.

11. ☒ Charge any fees due under 37 C.F.R. §§1.17(h) and 1.17(p) to Deposit Account No.-110980.

☒ The Commissioner is hereby authorized to charge any additional fees which may be required for this Information Disclosure Statement, or credit any overpayment to Deposit Account No. 11-0980.

Respectfully submitted,
KING & SPALDING LLP

/Robert T. Neufeld/
Robert T. Neufeld
Reg. No. 48394

Correspondence Address:
King & Spalding LLP
1180 Peachtree Street
Atlanta, GA 30309
404-572-4600 Telephone
404-572-5100 Facsimile

Electronic Patent Application Fee Transmittal

Application Number:	16014394
Filing Date:	21-Jun-2018
Title of Invention:	CONFIGURABLE LIGHTING SYSTEM
First Named Inventor/Applicant Name:	John Edward Bowen
Filer:	Robert Timothy Neufeld
Attorney Docket Number:	13682.227254

Filed as Large Entity

Filing Fees for Utility under 35 USC 111(a)

Description	Fee Code	Quantity	Amount	Sub-Total in USD($)
Basic Filing:				
Pages:				
Claims:				
Miscellaneous-Filing:				
Petition:				
Patent-Appeals-and-Interference:				
Post-Allowance-and-Post-Issuance:				
Extension-of-Time:				

Description	Fee Code	Quantity	Amount	Sub-Total in USD($)
Miscellaneous:				
SUBMISSION- INFORMATION DISCLOSURE STMT	1806	1	240	240
		Total in USD ($)		**240**

IN THE UNITED STATES PATENT AND TRADEMARK OFFICE

In re Application of:	§	
Steven Walter Pyshos	§	Confirmation No.: **1994**
	§	
Application Serial No: **16/014,394**	§	Group Art Unit: **2844**
	§	
Filed: **06-21-2018**	§	Examiner: **VU, JIMMY T**
	§	
For: **Configurable Lighting System**	§	Attorney Docket: **13682.227254**

INFORMATION DISCLOSURE STATEMENT

Commissioner for Patents
P.O. Box 1450
Alexandria, VA 22313-1450

Sir:

This Information Disclosure Statement is filed in accordance with 37 C.F.R. §§1.56, 1.97 and 1.98. The items listed on Form SB/08B are made of record to assist the Patent and Trademark Office in its examination of this application. The Examiner is respectfully requested to fully consider the items and to independently ascertain their teaching.

1. ☐ For each of the following items listed on the enclosed copy of Form SB/08B that is not in the English language, an English language translation of that item or a portion thereof or a concise explanation of the relevance of that item is enclosed:

2. ☐ For each of the following items listed on the enclosed copy of Form SB/08B that is not in the English language, a concise explanation of the relevance of that item is provided:

3. ☐ Any copy of the items listed on the enclosed copy of Form SB/08B that is not enclosed with this Information Disclosure Statement was previously cited by or submitted to the Patent and Trademark Office in application Serial No.

4. ☐ No fee is due under 37 C.F.R. §1.17(p) for this Information Disclosure Statement since it is being filed in compliance with:

   ☐ 37 C.F.R. §1.97(b)(1), within three months of the filing date of a national application other than a CPA; or

   ☐ 37 C.F.R. §1.97(b)(2), within three months of the date of entry into the national stage as set forth in §1.491 in an international application; or

☐ 37 C.F.R. §1.97(b)(3), before the mailing date of a first Office action on the merits; or

☐ 37 C.F.R. §1.97(b)(4) before the mailing date of a first office action after the filing of an RCE under §1.114

5. ☐ No fee is due under 37 C.F.R. §1.17(p) for this Supplemental Information Disclosure Statement since it is being filed in compliance with 37 C.F.R. §1.97(c), after the period specified in paragraph 4 above but before the mailing date of a final action or a Notice of Allowance (where there has been no prior final action), and is accompanied by one of the certifications pursuant to 37 C.F.R. §1.97(e) set forth in paragraph 9 below.

6. ☐ A fee is due under 37 C.F.R. §1.17(p) for this Supplemental Information Disclosure Statement since it is being filed in compliance with 37 C.F.R. §1.97(c), after the period specified in paragraph 4 above but before the mailing date of a final action or a notice of allowance (where there has been no prior final action):

☐ Payment of $240.00 is being made with a credit card via EFS-Web.

☐ Charge the fee to Deposit Account No.11-0980, Order No._____.

7. ☒ A fee is due under 37 C.F.R. §1.17(p) for this Supplemental Information Disclosure Statement since it is being filed in compliance with 37 C.F.R. §1.97(d), after the mailing date of a final action or a notice of allowance, whichever comes first, but before payment of the issue fee, and is accompanied by:

a. one of the certifications pursuant to 37 C.F.R. §1.97(e) set forth in paragraph 9 below; and

b. the fee due under 37 C.F.R. §1.17(p) which is paid as set forth in paragraph 11 below.

8. ☐ This Supplemental Information Disclosure Statement is being filed in compliance with:

a. ☐ 37 C.F.R. §1.313(b)(3) or §1.313(c)(1), after the issue fee has been paid and information cited in this Supplemental Information Disclosure Statement may render at least one claim unpatentable and is accompanied by the attached Petition To Withdraw Application From Issue and fee pursuant to 37 C.F.R. §1.17(h);

b. ☐ 37 C.F.R. §1.313(c)(2) or §1.313(c)(3), after the issue fee has been paid and information cited in this Supplemental Information Disclosure Statement is to be considered in a Request for Continued Examination (RCE) or a Continuation application upon abandonment of the instant application and is accompanied by the attached Petition To Withdraw Application From Issue and fee pursuant to 37 C.F.R. §1.17(h).

c. ☐ The fee due under 37 C.F.R. §§1.17(h) is paid as set forth in paragraph 11 below.

9. ☐ I hereby certify that each item of information contained in this Supplemental Information Disclosure Statement was first cited in a communication from a foreign patent office in a counterpart foreign application not more than three months prior to the filing of this Supplemental Information Disclosure Statement.

☒ I hereby certify that no item of information in the Supplemental Information Disclosure Statement filed herewith was cited in a communication from a foreign patent office in a counterpart foreign application or, to my knowledge after making reasonable inquiry, was known to any individual designated in §1.56(c) more than three months prior to the filing of this Supplemental Information Disclosure Statement.

10. ☐ This document is accompanied by ☐ a Search Report ☐ Communication which was cited in a corresponding ☐ PCT or ☐ Foreign counterpart application.

11. ☒ Charge any fees due under 37 C.F.R. §§1.17(h) and 1.17(p) to Deposit Account No.-110980.

☒ The Commissioner is hereby authorized to charge any additional fees which may be required for this Information Disclosure Statement, or credit any overpayment to Deposit Account No. 11-0980.

Respectfully submitted,
KING & SPALDING LLP

/Robert T. Neufeld/
Robert T. Neufeld
Reg. No. 48394

Correspondence Address:
King & Spalding LLP
1180 Peachtree Street
Atlanta, GA 30309
404-572-4600 Telephone
404-572-5100 Facsimile

Electronic Acknowledgement Receipt

EFS ID:	35267891
Application Number:	16014394
International Application Number:	
Confirmation Number:	1994
Title of Invention:	CONFIGURABLE LIGHTING SYSTEM
First Named Inventor/Applicant Name:	John Edward Bowen
Customer Number:	91764
Filer:	Robert Timothy Neufeld
Filer Authorized By:	
Attorney Docket Number:	13682.227254
Receipt Date:	27-FEB-2019
Filing Date:	21-JUN-2018
Time Stamp:	19:53:16
Application Type:	Utility under 35 USC 111(a)

Payment information:

Submitted with Payment	yes
Payment Type	CARD
Payment was successfully received in RAM	$240
RAM confirmation Number	022819INTEFSW19534000
Deposit Account	
Authorized User	
The Director of the USPTO is hereby authorized to charge indicated fees and credit any overpayment as follows:	

File Listing:

Document Number	Document Description	File Name	File Size(Bytes)/ Message Digest	Multi Part /.zip	Pages (if appl.)
1	Transmittal Letter	227254trans.pdf	102704 d7b753826de83fe53feb188e282889d4a32b7044	no	3
Warnings:					
Information:					
2	Information Disclosure Statement (IDS) Form (SB08)	227254ids.pdf	141999 d74f82a586ec31236c2f5e7391eda1be5fca6a0a	no	1
Warnings:					
Information:					
This is not an USPTO supplied IDS fillable form					
3	Fee Worksheet (SB06)	fee-info.pdf	30664 6642efbef32cfc0e5127a2beb6af4b11c70643b1	no	2
Warnings:					
Information:					
		Total Files Size (in bytes):	275367		

This Acknowledgement Receipt evidences receipt on the noted date by the USPTO of the indicated documents, characterized by the applicant, and including page counts, where applicable. It serves as evidence of receipt similar to a Post Card, as described in MPEP 503.

New Applications Under 35 U.S.C. 111
If a new application is being filed and the application includes the necessary components for a filing date (see 37 CFR 1.53(b)-(d) and MPEP 506), a Filing Receipt (37 CFR 1.54) will be issued in due course and the date shown on this Acknowledgement Receipt will establish the filing date of the application.
National Stage of an International Application under 35 U.S.C. 371
If a timely submission to enter the national stage of an international application is compliant with the conditions of 35 U.S.C. 371 and other applicable requirements a Form PCT/DO/EO/903 indicating acceptance of the application as a national stage submission under 35 U.S.C. 371 will be issued in addition to the Filing Receipt, in due course.
New International Application Filed with the USPTO as a Receiving Office
If a new international application is being filed and the international application includes the necessary components for an international filing date (see PCT Article 11 and MPEP 1810), a Notification of the International Application Number and of the International Filing Date (Form PCT/RO/105) will be issued in due course, subject to prescriptions concerning national security, and the date shown on this Acknowledgement Receipt will establish the international filing date of the application.

Electronic Patent Application Fee Transmittal

Application Number:	16014394
Filing Date:	21-Jun-2018
Title of Invention:	CONFIGURABLE LIGHTING SYSTEM
First Named Inventor/Applicant Name:	John Edward Bowen
Filer:	Robert Timothy Neufeld
Attorney Docket Number:	13682.227254

Filed as Large Entity

Filing Fees for Utility under 35 USC 111(a)

Description	Fee Code	Quantity	Amount	Sub-Total in USD($)
Basic Filing:				
Pages:				
Claims:				
Miscellaneous-Filing:				
Petition:				
Patent-Appeals-and-Interference:				
Post-Allowance-and-Post-Issuance:				
Extension-of-Time:				

Description	Fee Code	Quantity	Amount	Sub-Total in USD($)
Miscellaneous:				
SUBMISSION- INFORMATION DISCLOSURE STMT	1806	1	240	240
		Total in USD ($)		**240**

PTO/SB/08A (08-03)
Approved for use through 07/31/2006. OMB 0651-0031
U.S. Patent and Trademark Office: U.S. DEPARTMENT OF COMMERCE
Under the Paperwork Reduction Act of 1995 no persons are required to respond to a collection of information unless it contains a valid OMB control number.

Substitute for form 1449A/PTO

INFORMATION DISCLOSURE STATEMENT BY APPLICANT

(use as many sheets as necessary)

Sheet	1	of	1

Complete if Known	
Application Number	**16/014394**
Filing Date	**06-21-2018**
First Named Inventor	**John Edward Bowen**
Group Art Unit	**2844**
Examiner Name	**Jimmy T. Vu**
Attorney Docket Number	**13682.227254**

U.S. PATENT DOCUMENTS

Examiner Initials *	Cite No. [1]	U.S. Patent Document Number	Kind Code (if known)	Name of Patentee or Applicant of Cited Document	Date of Publication of Cited Document MM-DD- YYYY	Pages Columns Lines Where Relevant Passages or Relevant Figures Appear
	1.	10136503		Chen	11-20-2018	

FOREIGN PATENT DOCUMENTS

Examiner Initials *	Cite No. [1]	Foreign Patent Document Office[3]	Number	Kind Code[2] (if known)	Name of Patentee or Applicant of Cited Document	Date of Publication of Cited Document MM-DD- YYYY	Pages Columns Lines Where Relevant Passages or Relevant Figures Appear	T [6]

OTHER PRIOR ART – NON PATENT LITERATURE DOCUMENTS

Examiner Initials *	Cite No. [1]	Include name of the author (in CAPITAL LETTERS) title of the article (when appropriate) title of the item (book magazine journal serial symposium catalog etc.) date page(s) volume-issue number(s) publisher city and/or country where published.	T [6]

Examiner Signature		Date Considered	

*EXAMINER: Initial if reference considered whether or not citation is in conformance with MPEP 609. Draw line through citation if not in conformance and not considered. Include copy of this form with next communication to applicant.

[1] Unique citation designation number. [2] See attached Kinds of U.S. Patent Documents. [3] Enter Office that issued the document by the two-letter code (WIPO Standard ST.3). [4] For Japanese patent documents the indication of the year of the reign of the Emperor must precede the serial number of the patent document. [5] Kind of document by the appropriate symbols as indicated on the document under WIPO Standard ST. 16 if possible. [6] Applicant is to place a check mark here if English language Translation is attached.

Burden Hour Statement: This form is estimated to take 2.0 hours to complete. Time will vary depending upon the needs of the individual case. Any comments on the amount of time you are required to complete this form should be sent to the Chief Information Officer U. S. Patent and Trademark Office Washington DC 20231. DO NOT SEND FEES OR COMPLETED FORMS TO THIS ADDRESS. SEND TO: Assistant Commissioner for Patents Washington DC 20231.
DMSLIBRARY01\33911638.v1

PTO/SB/08A (08-03)
Approved for use through 07/31/2006. OMB 0651-0031
U.S. Patent and Trademark Office: U.S. DEPARTMENT OF COMMERCE
Under the Paperwork Reduction Act of 1995 no persons are required to respond to a collection of information unless it contains a valid OMB control number.

Substitute for form 1449A/PTO

INFORMATION DISCLOSURE STATEMENT BY APPLICANT

(use as many sheets as necessary)

Sheet	1	of	1

Complete if Known	
Application Number	**16/014394**
Filing Date	**06-21-2018**
First Named Inventor	**John Edward Bowen**
Group Art Unit	**2844**
Examiner Name	**Jimmy T. Vu**
Attorney Docket Number	**13682.227254**

U.S. PATENT DOCUMENTS

Examiner Initials *	Cite No. [1]	U.S. Patent Document Number	Kind Code (if known)	Name of Patentee or Applicant of Cited Document	Date of Publication of Cited Document MM-DD- YYYY	Pages Columns Lines Where Relevant Passages or Relevant Figures Appear
	1	7014336		Ducharme	03-21-2006	
	2	7255457		Ducharme	08-14-2007	

FOREIGN PATENT DOCUMENTS

Examiner Initials *	Cite No. [1]	Foreign Patent Document Office[3]	Number	Kind Code[2] (if known)	Name of Patentee or Applicant of Cited Document	Date of Publication of Cited Document MM-DD- YYYY	Pages Columns Lines Where Relevant Passages or Relevant Figures Appear	T [6]

OTHER PRIOR ART – NON PATENT LITERATURE DOCUMENTS

Examiner Initials *	Cite No. [1]	Include name of the author (in CAPITAL LETTERS) title of the article (when appropriate) title of the item (book magazine journal serial symposium catalog etc.) date page(s) volume-issue number(s) publisher city and/or country where published.	T [6]

Examiner Signature	/JIMMY T VU/	Date Considered	03/25/2019

*EXAMINER: Initial if reference considered whether or not citation is in conformance with MPEP 609. Draw line through citation if not in conformance and not considered. Include copy of this form with next communication to applicant.

[1] Unique citation designation number. [2] See attached Kinds of U.S. Patent Documents. [3] Enter Office that issued the document by the two-letter code (WIPO Standard ST.3). [4] For Japanese patent documents the indication of the year of the reign of the Emperor must precede the serial number of the patent document. [5] Kind of document by the appropriate symbols as indicated on the document under WIPO Standard ST. 16 if possible. [6] Applicant is to place a check mark here if English language Translation is attached.

Burden Hour Statement: This form is estimated to take 2.0 hours to complete. Time will vary depending upon the needs of the individual case. Any comments on the amount of time you are required to complete this form should be sent to the Chief Information Officer U. S. Patent and Trademark Office Washington DC 20231. DO NOT SEND FEES OR COMPLETED FORMS TO THIS ADDRESS. SEND TO: Assistant Commissioner for Patents Washington DC 20231.
DMSLIBRARY01\33841516.v1

ALL REFERENCES CONSIDERED EXCEPT WHERE LINED THROUGH. /J.T.V/

UNITED STATES PATENT AND TRADEMARK OFFICE

UNITED STATES DEPARTMENT OF COMMERCE
United States Patent and Trademark Office
Address: COMMISSIONER FOR PATENTS
P.O. Box 1450
Alexandria, Virginia 22313-1450
www.uspto.gov

APPLICATION NO.	FILING DATE	FIRST NAMED INVENTOR	ATTORNEY DOCKET NO.	CONFIRMATION NO.
16/014,394	06/21/2018	John Edward Bowen	13682.227254	1994

91764 7590 03/28/2019
King & Spalding LLP (Eaton/Cooper)
ATTN: IP Docketing Department
1100 Louisiana Street, Suite 4000
Houston, TX 77002-5213

EXAMINER
VU, JIMMY T

ART UNIT	PAPER NUMBER
2844	

NOTIFICATION DATE	DELIVERY MODE
03/28/2019	ELECTRONIC

Please find below and/or attached an Office communication concerning this application or proceeding.

The time period for reply, if any, is set in the attached communication.

Notice of the Office communication was sent electronically on above-indicated "Notification Date" to the following e-mail address(es):

houpatentdocket@kslaw.com
nduby@kslaw.com

PTOL-90A (Rev. 04/07)

UNITED STATES DEPARTMENT OF COMMERCE
U.S. Patent and Trademark Office
Address: COMMISSIONER FOR PATENTS
P.O. Box 1450
Alexandria, Virginia 22313-1450

APPLICATION NO./ CONTROL NO.	FILING DATE	FIRST NAMED INVENTOR/ PATENT IN REEXAMINATION	ATTORNEY DOCKET NO.
16/014,394	06/21/2018	Bowen et al.	13682.227254

		EXAMINER	
King & Spalding LLP (Eaton/Cooper) ATTN: IP Docketing Department 1100 Louisiana Street, Suite 4000 Houston, TX 77002-5213		JIMMY T VU	
		ART UNIT	PAPER
		2844	20190325

DATE MAILED: _____

Please find below and/or attached an Office communication concerning this application or proceeding.

Commissioner for Patents

The references cited in the Information Disclosure Statement (IDS(s)) filed on 02/22/2019 and 02/27/2019 have been considered by the examiner. /JV/

/JIMMY T VU/
Primary Examiner, Art Unit 2844

PTO-90C (Rev.04-03)

PTO/SB/08A (08-03)
Approved for use through 07/31/2006. OMB 0651-0031
U.S. Patent and Trademark Office: U.S. DEPARTMENT OF COMMERCE
Under the Paperwork Reduction Act of 1995 no persons are required to respond to a collection of information unless it contains a valid OMB control number.

Substitute for form 1449A/PTO

INFORMATION DISCLOSURE STATEMENT BY APPLICANT

(use as many sheets as necessary)

Sheet	1	of	1

Complete if Known	
Application Number	**16/014394**
Filing Date	**06-21-2018**
First Named Inventor	**John Edward Bowen**
Group Art Unit	**2844**
Examiner Name	**Jimmy T. Vu**
Attorney Docket Number	**13682.227254**

U.S. PATENT DOCUMENTS

Examiner Initials *	Cite No. [1]	U.S. Patent Document Number	Kind Code (if known)	Name of Patentee or Applicant of Cited Document	Date of Publication of Cited Document MM-DD- YYYY	Pages Columns Lines Where Relevant Passages or Relevant Figures Appear
	1.	10136503		Chen	11-20-2018	

FOREIGN PATENT DOCUMENTS

Examiner Initials *	Cite No. [1]	Foreign Patent Document Office[3]	Number	Kind Code[2] (if known)	Name of Patentee or Applicant of Cited Document	Date of Publication of Cited Document MM-DD- YYYY	Pages Columns Lines Where Relevant Passages or Relevant Figures Appear	T [6]

OTHER PRIOR ART – NON PATENT LITERATURE DOCUMENTS

Examiner Initials *	Cite No. [1]	Include name of the author (in CAPITAL LETTERS) title of the article (when appropriate) title of the item (book magazine journal serial symposium catalog etc.) date page(s) volume-issue number(s) publisher city and/or country where published.	T [6]

Examiner Signature	/JIMMY T VU/	Date Considered	03/25/2019

*EXAMINER: Initial if reference considered whether or not citation is in conformance with MPEP 609. Draw line through citation if not in conformance and not considered. Include copy of this form with next communication to applicant.

[1] Unique citation designation number. [2] See attached Kinds of U.S. Patent Documents. [3] Enter Office that issued the document by the two-letter code (WIPO Standard ST.3). [4] For Japanese patent documents the indication of the year of the reign of the Emperor must precede the serial number of the patent document. [5] Kind of document by the appropriate symbols as indicated on the document under WIPO Standard ST. 16 if possible. [6] Applicant is to place a check mark here if English language Translation is attached.

Burden Hour Statement: This form is estimated to take 2.0 hours to complete. Time will vary depending upon the needs of the individual case. Any comments on the amount of time you are required to complete this form should be sent to the Chief Information Officer U. S. Patent and Trademark Office Washington DC 20231. DO NOT SEND FEES OR COMPLETED FORMS TO THIS ADDRESS. SEND TO: Assistant Commissioner for Patents Washington DC 20231.
DMSLIBRARY01\33911638.v1

ALL REFERENCES CONSIDERED EXCEPT WHERE LINED THROUGH. /J.T.V/

PTO/SB/47 (03-09)
Approved for use through 03/31/2012. OMB 0651-0016
U.S. Patent and Trademark Office; U. S. DEPARTMENT OF COMMERCE
Under the Paperwork Reduction Act of 1995, no persons are required to respond to a collection of information unless it displays a valid OMB control number.

"FEE ADDRESS" INDICATION FORM

Address to:
Mail Stop M Correspondence
Commissioner for Patents
P.O. Box 1450
Alexandria, VA 22313-1450

- OR -

Fax to:
571-273-6500

INSTRUCTIONS: The issue fee must have been paid for application(s) listed on this form. In addition, only an address represented by a Customer Number can be established as the fee address for maintenance fee purposes (hereafter, fee address). A fee address should be established when correspondence related to maintenance fees should be mailed to a different address than the correspondence address for the application. **When to check the first box below**: If you have a Customer Number to represent the fee address. **When to check the second box below**: If you have no Customer Number representing the desired fee address, in which case a completed Request for Customer Number (PTO/SB/125) must be attached to this form. For more information on Customer Numbers, see the Manual of Patent Examining Procedure (MPEP) § 403.

For the following listed application(s), please recognize as the "Fee Address" under the provisions of 37 CFR 1.363 the address associated with:

☑ Customer Number: 00124

OR

☐ The attached Request for Customer Number (PTO/SB/125) form.

PATENT NUMBER (if known)	APPLICATION NUMBER
	16/014394

Completed by (check one):

☐ Applicant/Inventor

/Robert T. Neufeld/
Signature

☑ Attorney or Agent of record 48,394 (Reg. No.)

Robert T. Neufeld
Typed or printed name

☐ Assignee of record of the entire interest. See 37 CFR 3.71. Statement under 37 CFR 3.73(b) is enclosed. (Form PTO/SB/96)

404.572.4600
Requester's telephone number

☐ Assignee recorded at Reel _____ Frame_____

March 29, 2019
Date

NOTE: Signatures of all the inventors or assignees of record of the entire interest or their representative(s) are required. Submit multiple forms if more that one signature is required, see below*.

☑ *** Total of** 1 **forms are submitted.**

This collection of information is required by 37 CFR 1.363. The information is required to obtain or retain a benefit by the public which is to file (and by the USPTO to process) an application. Confidentiality is governed by 35 U.S.C. 122 and 37 CFR 1. 11 and 1.14. This collection is estimated to take 5 minutes to complete, including gathering, preparing, and submitting the completed application form to the USPTO. Time will vary depending upon the individual case. Any comments on the amount of time you require to complete this form and/or suggestions for reducing this burden, should be sent to the Chief Information Officer, U.S. Patent and Trademark Office, U.S. Department of Commerce, P.O. Box 1450, Alexandria, VA 22313- 1450. DO NOT SEND COMPLETED FORMS TO THIS ADDRESS. **SEND TO: Mail Stop M Correspondence, Commissioner for Patents, P.O. Box 1450, Alexandria, VA 22313-1450.**

If you need assistance in completing the form, call 1-800-PTO-9199 and select option 2.

Privacy Act Statement

The **Privacy Act of 1974 (P.L. 93-579)** requires that you be given certain information in connection with your submission of the attached form related to a patent application or patent. Accordingly, pursuant to the requirements of the Act, please be advised that: (1) the general authority for the collection of this information is 35 U.S.C. 2(b)(2); (2) furnishing of the information solicited is voluntary; and (3) the principal purpose for which the information is used by the U.S. Patent and Trademark Office is to process and/or examine your submission related to a patent application or patent. If you do not furnish the requested information, the U.S. Patent and Trademark Office may not be able to process and/or examine your submission, which may result in termination of proceedings or abandonment of the application or expiration of the patent.

The information provided by you in this form will be subject to the following routine uses:

1. The information on this form will be treated confidentially to the extent allowed under the Freedom of Information Act (5 U.S.C. 552) and the Privacy Act (5 U.S.C 552a). Records from this system of records may be disclosed to the Department of Justice to determine whether disclosure of these records is required by the Freedom of Information Act.
2. A record from this system of records may be disclosed, as a routine use, in the course of presenting evidence to a court, magistrate, or administrative tribunal, including disclosures to opposing counsel in the course of settlement negotiations.
3. A record in this system of records may be disclosed, as a routine use, to a Member of Congress submitting a request involving an individual, to whom the record pertains, when the individual has requested assistance from the Member with respect to the subject matter of the record.
4. A record in this system of records may be disclosed, as a routine use, to a contractor of the Agency having need for the information in order to perform a contract. Recipients of information shall be required to comply with the requirements of the Privacy Act of 1974, as amended, pursuant to 5 U.S.C. 552a(m).
5. A record related to an International Application filed under the Patent Cooperation Treaty in this system of records may be disclosed, as a routine use, to the International Bureau of the World Intellectual Property Organization, pursuant to the Patent Cooperation Treaty.
6. A record in this system of records may be disclosed, as a routine use, to another federal agency for purposes of National Security review (35 U.S.C. 181) and for review pursuant to the Atomic Energy Act (42 U.S.C. 218(c)).
7. A record from this system of records may be disclosed, as a routine use, to the Administrator, General Services, or his/her designee, during an inspection of records conducted by GSA as part of that agency's responsibility to recommend improvements in records management practices and programs, under authority of 44 U.S.C. 2904 and 2906. Such disclosure shall be made in accordance with the GSA regulations governing inspection of records for this purpose, and any other relevant (*i.e.*, GSA or Commerce) directive. Such disclosure shall not be used to make determinations about individuals.
8. A record from this system of records may be disclosed, as a routine use, to the public after either publication of the application pursuant to 35 U.S.C. 122(b) or issuance of a patent pursuant to 35 U.S.C. 151. Further, a record may be disclosed, subject to the limitations of 37 CFR 1.14, as a routine use, to the public if the record was filed in an application which became abandoned or in which the proceedings were terminated and which application is referenced by either a published application, an application open to public inspection or an issued patent.
9. A record from this system of records may be disclosed, as a routine use, to a Federal, State, or local law enforcement agency, if the USPTO becomes aware of a violation or potential violation of law or regulation.

PART B - FEE(S) TRANSMITTAL

Complete and send this form, together with applicable fee(s), by mail or fax, or via EFS-Web.

By mail, send to: Mail Stop ISSUE FEE
Commissioner for Patents
P.O. Box 1450
Alexandria, Virginia 22313-1450

By fax, send to: (571)-273-2885

INSTRUCTIONS: This form should be used for transmitting the ISSUE FEE and PUBLICATION FEE (if required). Blocks 1 through 5 should be completed where appropriate. All further correspondence including the Patent, advance orders and notification of maintenance fees will be mailed to the current correspondence address as indicated unless corrected below or directed otherwise in Block 1, by (a) specifying a new correspondence address; and/or (b) indicating a separate "FEE ADDRESS" for maintenance fee notifications.

CURRENT CORRESPONDENCE ADDRESS (Note: Use Block 1 for any change of address)

91764 7590 02/12/2019
King & Spalding LLP (Eaton/Cooper)
ATTN: IP Docketing Department
1100 Louisiana Street, Suite 4000
Houston, TX 77002-5213

Note: A certificate of mailing can only be used for domestic mailings of the Fee(s) Transmittal. This certificate cannot be used for any other accompanying papers. Each additional paper, such as an assignment or formal drawing, must have its own certificate of mailing or transmission.

Certificate of Mailing or Transmission

I hereby certify that this Fee(s) Transmittal is being deposited with the United States Postal Service with sufficient postage for first class mail in an envelope addressed to the Mail Stop ISSUE FEE address above, or being transmitted to the USPTO via EFS-Web or by facsimile to (571) 273-2885, on the date below.

Robert T. Neufeld	(Typed or printed name)
/Robert T. Neufeld/	(Signature)
03-29-2019	(Date)

APPLICATION NO.	FILING DATE	FIRST NAMED INVENTOR	ATTORNEY DOCKET NO.	CONFIRMATION NO.
16/014,394	06/21/2018	John Edward Bowen	13682.227254	1994

TITLE OF INVENTION: CONFIGURABLE LIGHTING SYSTEM

APPLN. TYPE	ENTITY STATUS	ISSUE FEE DUE	PUBLICATION FEE DUE	PREV. PAID ISSUE FEE	TOTAL FEE(S) DUE	DATE DUE
nonprovisional	UNDISCOUNTED	$1000	$0.00	$0.00	$1000	05/13/2019

EXAMINER	ART UNIT	CLASS-SUBCLASS
VU, JIMMY T	2844	315-294000

1. Change of correspondence address or indication of "Fee Address" (37 CFR 1.363).

☐ Change of correspondence address (or Change of Correspondence Address form PTO/SB/122) attached.

☒ "Fee Address" indication (or "Fee Address" Indication form PTO/SB/47; Rev 03-09 or more recent) attached. **Use of a Customer Number is required.**

2. For printing on the patent front page, list
(1) The names of up to 3 registered patent attorneys or agents OR, alternatively,
(2) The name of a single firm (having as a member a registered attorney or agent) and the names of up to 2 registered patent attorneys or agents. If no name is listed, no name will be printed.

KING & SPALDING LLP
1 _____
2 _____
3 _____

3. ASSIGNEE NAME AND RESIDENCE DATA TO BE PRINTED ON THE PATENT (print or type)

PLEASE NOTE: Unless an assignee is identified below, no assignee data will appear on the patent. If an assignee is identified below, the document must have been previously recorded, or filed for recordation, as set forth in 37 CFR 3.11 and 37 CFR 3.81(a). Completion of this form is NOT a substitute for filing an assignment.

(A) NAME OF ASSIGNEE: EATON INTELLIGENT POWER LIMITED

(B) RESIDENCE: (CITY and STATE OR COUNTRY): DUBLIN, IRELAND

Please check the appropriate assignee category or categories (will not be printed on the patent) : ☐ Individual ☒ Corporation or other private group entity ☐ Government

4a. Fees submitted: ☒ Issue Fee ☐ Publication Fee (if required) ☐ Advance Order - # of Copies _____

4b. Method of Payment: *(Please first reapply any previously paid fee shown above)*

☒ Electronic Payment via EFS-Web ☐ Enclosed check ☐ Non-electronic payment by credit card (Attach form PTO-2038)

☒ The Director is hereby authorized to charge the required fee(s), any deficiency, or credit any overpayment to Deposit Account No. 110980

5. **Change in Entity Status** (from status indicated above)

☐ Applicant certifying micro entity status. See 37 CFR 1.29

☐ Applicant asserting small entity status. See 37 CFR 1.27

☐ Applicant changing to regular undiscounted fee status.

NOTE: Absent a valid certification of Micro Entity Status (see forms PTO/SB/15A and 15B), issue fee payment in the micro entity amount will not be accepted at the risk of application abandonment.
NOTE: If the application was previously under micro entity status, checking this box will be taken to be a notification of loss of entitlement to micro entity status.
NOTE: Checking this box will be taken to be a notification of loss of entitlement to small or micro entity status, as applicable.

NOTE: This form must be signed in accordance with 37 CFR 1.31 and 1.33. See 37 CFR 1.4 for signature requirements and certifications.

Authorized Signature /Robert T. Neufeld/ Date 03-29-2019

Typed or printed name Robert T. Neufeld Registration No. 48394

PTOL-85 Part B (08-18) Approved for use through 01/31/2020 OMB 0651-0033 U.S. Patent and Trademark Office; U.S. DEPARTMENT OF COMMERCE

Luminex v. Signify
Luminex Exhibit 1007
Page 273

Electronic Patent Application Fee Transmittal

Application Number:	16014394
Filing Date:	21-Jun-2018
Title of Invention:	CONFIGURABLE LIGHTING SYSTEM
First Named Inventor/Applicant Name:	John Edward Bowen
Filer:	Robert Timothy Neufeld
Attorney Docket Number:	13682.227254

Filed as Large Entity

Filing Fees for Utility under 35 USC 111(a)

Description	Fee Code	Quantity	Amount	Sub-Total in USD($)
Basic Filing:				
Pages:				
Claims:				
Miscellaneous-Filing:				
Petition:				
Patent-Appeals-and-Interference:				
Post-Allowance-and-Post-Issuance:				
UTILITY APPL ISSUE FEE	1501	1	1000	1000

Description	Fee Code	Quantity	Amount	Sub-Total in USD($)
Extension-of-Time:				
Miscellaneous:				
			Total in USD ($)	**1000**

Electronic Acknowledgement Receipt

EFS ID:	35576055
Application Number:	16014394
International Application Number:	
Confirmation Number:	1994
Title of Invention:	CONFIGURABLE LIGHTING SYSTEM
First Named Inventor/Applicant Name:	John Edward Bowen
Customer Number:	91764
Filer:	Robert Timothy Neufeld
Filer Authorized By:	
Attorney Docket Number:	13682.227254
Receipt Date:	29-MAR-2019
Filing Date:	21-JUN-2018
Time Stamp:	18:07:27
Application Type:	Utility under 35 USC 111(a)

Payment information:

Submitted with Payment	yes
Payment Type	CARD
Payment was successfully received in RAM	$1000
RAM confirmation Number	040119INTEFSW18103100
Deposit Account	
Authorized User	
The Director of the USPTO is hereby authorized to charge indicated fees and credit any overpayment as follows:	

File Listing:

Document Number	Document Description	File Name	File Size(Bytes)/ Message Digest	Multi Part /.zip	Pages (if appl.)
1	Issue Fee Payment (PTO-85B)	227254noa.pdf	97251 4bbdaea14efc758d270d3e0845bd08e941c7a2d2	no	1
Warnings:					
Information:					
2	Maintenance Fee Address Change	227254fee.pdf	312213 48d719dddd1756e75ba4bfc979dd69347a71a5e5	no	2
Warnings:					
Information:					
3	Fee Worksheet (SB06)	fee-info.pdf	30514 1a065bb3cce38d7c5722eda289fb3f9a22d8414a	no	2
Warnings:					
Information:					
		Total Files Size (in bytes):	439978		

This Acknowledgement Receipt evidences receipt on the noted date by the USPTO of the indicated documents, characterized by the applicant, and including page counts, where applicable. It serves as evidence of receipt similar to a Post Card, as described in MPEP 503.

New Applications Under 35 U.S.C. 111
If a new application is being filed and the application includes the necessary components for a filing date (see 37 CFR 1.53(b)-(d) and MPEP 506), a Filing Receipt (37 CFR 1.54) will be issued in due course and the date shown on this Acknowledgement Receipt will establish the filing date of the application.
National Stage of an International Application under 35 U.S.C. 371
If a timely submission to enter the national stage of an international application is compliant with the conditions of 35 U.S.C. 371 and other applicable requirements a Form PCT/DO/EO/903 indicating acceptance of the application as a national stage submission under 35 U.S.C. 371 will be issued in addition to the Filing Receipt, in due course.
New International Application Filed with the USPTO as a Receiving Office
If a new international application is being filed and the international application includes the necessary components for an international filing date (see PCT Article 11 and MPEP 1810), a Notification of the International Application Number and of the International Filing Date (Form PCT/RO/105) will be issued in due course, subject to prescriptions concerning national security, and the date shown on this Acknowledgement Receipt will establish the international filing date of the application.

UNITED STATES PATENT AND TRADEMARK OFFICE

UNITED STATES DEPARTMENT OF COMMERCE
United States Patent and Trademark Office
Address: COMMISSIONER FOR PATENTS
P.O. Box 1450
Alexandria, Virginia 22313-1450
www.uspto.gov

APPLICATION NO.	ISSUE DATE	PATENT NO.	ATTORNEY DOCKET NO.	CONFIRMATION NO.
16/014,394	05/21/2019	10299336	13682.227254	1994

91764 7590 05/01/2019
King & Spalding LLP (Eaton/Cooper)
ATTN: IP Docketing Department
1100 Louisiana Street, Suite 4000
Houston, TX 77002-5213

ISSUE NOTIFICATION

The projected patent number and issue date are specified above.

Determination of Patent Term Adjustment under 35 U.S.C. 154 (b)
(application filed on or after May 29, 2000)

The Patent Term Adjustment is 0 day(s). Any patent to issue from the above-identified application will include an indication of the adjustment on the front page.

If a Continued Prosecution Application (CPA) was filed in the above-identified application, the filing date that determines Patent Term Adjustment is the filing date of the most recent CPA.

Applicant will be able to obtain more detailed information by accessing the Patent Application Information Retrieval (PAIR) WEB site (http://pair.uspto.gov).

Any questions regarding the Patent Term Extension or Adjustment determination should be directed to the Office of Patent Legal Administration at (571)-272-7702. Questions relating to issue and publication fee payments should be directed to the Application Assistance Unit (AAU) of the Office of Data Management (ODM) at (571)-272-4200.

APPLICANT(s) (Please see PAIR WEB site http://pair.uspto.gov for additional applicants):

Eaton Intelligent Power Limited, Dublin, IRELAND;
John Edward Bowen, Sharpsburg, GA;
Raymond Janik, Fayetteville, GA;

The United States represents the largest, most dynamic marketplace in the world and is an unparalleled location for business investment, innovation, and commercialization of new technologies. The USA offers tremendous resources and advantages for those who invest and manufacture goods here. Through SelectUSA, our nation works to encourage and facilitate business investment. To learn more about why the USA is the best country in the world to develop technology, manufacture products, and grow your business, visit SelectUSA.gov.

IR103 (Rev. 10/09)

AO 120 (Rev. 08/10)

TO:	Mail Stop 8 Director of the U.S. Patent and Trademark Office P.O. Box 1450 Alexandria, VA 22313-1450	REPORT ON THE FILING OR DETERMINATION OF AN ACTION REGARDING A PATENT OR TRADEMARK

In Compliance with 35 U.S.C. § 290 and/or 15 U.S.C. § 1116 you are hereby advised that a court action has been filed in the U.S. District Court Northern District of Ohio on the following

☐ Trademarks or ☑ Patents. (☐ the patent action involves 35 U.S.C. § 292.):

DOCKET NO.	DATE FILED	U.S. DISTRICT COURT Northern District of Ohio
PLAINTIFF SIGNIFY NORTH AMERICA CORPORATION; SIGNIFY HOLDING B.V.		DEFENDANT MENARD, INC.

PATENT OR TRADEMARK NO.	DATE OF PATENT OR TRADEMARK	HOLDER OF PATENT OR TRADEMARK
1 7,038,399	5/2/2006	Signify North America Corp.
2 7,256,554	8/14/2007	Signify North America Corp.
3 7,737,643	6/15/2010	Signify North America Corp.
4 7,348,604	3/25/2008	Signify Holding B.V.
5 7,658,506	2/9/2010	Signify North America Corp.

In the above—entitled case, the following patent(s)/ trademark(s) have been included:

DATE INCLUDED	INCLUDED BY ☐ Amendment ☐ Answer ☐ Cross Bill ☐ Other Pleading	
PATENT OR TRADEMARK NO.	DATE OF PATENT OR TRADEMARK	HOLDER OF PATENT OR TRADEMARK
1		
2		
3		
4		
5		

In the above—entitled case, the following decision has been rendered or judgement issued:

DECISION/JUDGEMENT

CLERK	(BY) DEPUTY CLERK	DATE

Copy 1—Upon initiation of action, mail this copy to Director **Copy 3—Upon termination of action, mail this copy to Director**
Copy 2—Upon filing document adding patent(s), mail this copy to Director **Copy 4—Case file copy**

REPORT ON THE FILING OR DETERMINATION OF AN ACTION REGARDING A PATENT OR TRADEMARK

	PATENT OR TRADEMARK NO.	DATE OF PATENT OR TRADEMARK	HOLDER OF PATENT OR TRADEMARK
6	10,299,336	5/21/2019	Signify Holding B.V.